WATER RECLAMATION FACILITY

FOR THE CITY OF:

MORRO BAY, CA

PREPARED BY:

JOINT VENTURE

FILANC BLACK & VEATCH



EXISTING MORRO BAY-CAYUCOS WASTEWATER TREATMENT PLANT

PROPOSED MORRO BAY WATER RECLAMATION FACILITY PARCEL



NO.	BY	CHK	APP	DATE	REVISIONS AND RECORD OF USE
0	KEZ	RWF	EVB	5/19/2020	ISSUED FOR CONSTRUCTION

REGISTERED PROFESSIONAL ENGINEER
ERICK V. BEVINGTON
No. C 78836
CIVIL
STATE OF CALIFORNIA
5/20/2020

BLACK & VEATCH JOINT VENTURE FILANC

CITY OF MORRO BAY
MORRO BAY WATER RECLAMATION FACILITY (WRF)

GENERAL COVER SHEET

DESIGNED: EVB, KEZ
DETAILED: MAK
CHECKED: EVB
APPROVED: EVB
DATE: 5/19/2020

0 1/2 1
IF THIS BAR DOES NOT MEASURE 1" THEN DRAWING IS NOT TO FULL SCALE

PROJECT NO.
400530

00-G-001
SHEET
1 OF 412

D400530
FD81203_PW

GENERAL

SHEET NO.	DRAWING NO.	DESCRIPTION
1	00-G-001	GENERAL; COVER SHEET
2	00 G 002	GENERAL; SHEET LIST 1
3	00 G 003	GENERAL; SHEET LIST 2
4	00 G 004	GENERAL; ABBREVIATIONS
5	00 G 005	GENERAL; LEGEND
6	00 G 006	GENERAL; PROCESS SCHEMATIC
7	00 G 007	GENERAL; HYDRAULIC PROFILES
8	00-G-008	GENERAL; CODE CLASSIFICATION TABLE
9	00-G-009	GENERAL; GENERAL NOTES 1

CIVIL

SHEET NO.	DRAWING NO.	DESCRIPTION
	10 C 001	SITE - OVERALL; EXISTING SITE GRADE AND FEATURES - SEE IFC EARLY WORKS PACKAGE
	10 C 002	SITE - OVERALL; SITE PREPARATION FINISHED GRADE OVERVIEW - SEE IFC EARLY WORKS PACKAGE
	10 C 003	SITE - OVERALL; DEPTH FROM EXISTING GRADE TO BEDROCK - SEE IFC EARLY WORKS PACKAGE
	10-C-004	SITE - OVERALL; DEPTH FROM SITE PREP GRADE TO BEDROCK - SEE IFC EARLY WORKS PACKAGE
	10-C-005	SITE - OVERALL; DEPTH FROM SITE PREP GRADE TO EXISTING GRADE - SEE IFC EARLY WORKS PACKAGE
	10-C-006	SITE - OVERALL; SITE PREPARATION GRADING AND DRAINAGE KEY PLAN - SEE IFC EARLY WORKS PACKAGE
	10-C-101	SITE - AREA 1; SITE PREPARATION GRADING AND DRAINAGE PLAN - SEE IFC EARLY WORKS PACKAGE
	10-C-102	SITE - AREA 2; SITE PREPARATION GRADING AND DRAINAGE PLAN - SEE IFC EARLY WORKS PACKAGE
	10-C-103	SITE - AREA 3; SITE PREPARATION GRADING AND DRAINAGE PLAN - SEE IFC EARLY WORKS PACKAGE
	10-C-104	SITE - AREA 4; SITE PREPARATION GRADING AND DRAINAGE PLAN - SEE IFC EARLY WORKS PACKAGE
	10 C 105	SITE - OVERALL; DRAINAGE SWALES PLAN AND PROFILES - SEE IFC EARLY WORKS PACKAGE
	10 C 301	SITE - OVERALL; SITE PREP SECTIONS 1 - SEE IFC EARLY WORKS PACKAGE
	10 C 302	SITE - OVERALL; SITE PREP SECTIONS 2 - SEE IFC EARLY WORKS PACKAGE
	10 C 501	SITE - OVERALL; SITE PREP GRADING AND DRAINAGE DETAILS 1 - SEE IFC EARLY WORKS PACKAGE
	10-C-502	SITE - OVERALL; SITE PREP GRADING AND DRAINAGE DETAILS 2 - SEE IFC EARLY WORKS PACKAGE
	10-C-503	SITE - OVERALL; SITE PREP DETAILS - SEE IFC EARLY WORKS PACKAGE
	10-C-601	SITE - OVERALL; SITE PREP COORDINATE TABLES - SEE IFC EARLY WORKS PACKAGE
10	11 C 001	SITE - OVERALL; GRADING AND PAVING KEY PLAN
11	11 C 002	SITE - OVERALL; GRADING AND PAVING OVERVIEW
12	11-C-101	SITE - ACCESS ROAD AREA; GRADING AND PAVING PLAN
13	11-C-102	SITE - SOUTH OPERATIONS AREA; GRADING AND PAVING PLAN
14	11-C-103	SITE - NORTH OPERATIONS AREA; GRADING AND PAVING PLAN
15	11-C-104	SITE - SOUTH PROCESS AREA; GRADING AND PAVING PLAN
16	11-C-105	SITE - NORTH PROCESS AREA; GRADING AND PAVING PLAN
17	11-C-601	SITE - OVERALL; COORDINATE TABLES 1
18	11-C-601	SITE - OVERALL; COORDINATE TABLES 2
	12 C 001	SITE - OVERALL; PIPING KEY PLAN - SEE IFC YARD PIPING PACKAGE
	12 C 101	SITE - NORTH TERESA ROAD AREA; PIPE INTERCONNECTION - SEE IFC YARD PIPING PACKAGE
	12 C 102	SITE - SOUTH OPERATIONS AREA; PIPING PLAN - SEE IFC YARD PIPING PACKAGE
	12-C-103	SITE - NORTH OPERATIONS AREA; PIPING PLAN - SEE IFC YARD PIPING PACKAGE
	12-C-104	SITE - SOUTH PROCESS AREA; PIPING PLAN - SEE IFC YARD PIPING PACKAGE
	12-C-105	SITE - NORTH PROCESS AREA; PIPING PLAN - SEE IFC YARD PIPING PACKAGE
	12 C 301	SITE - OVERALL; PIPING SECTIONS AND DETAILS - SEE IFC YARD PIPING PACKAGE
	12 C 501	SITE - DETAILS - SEE IFC YARD PIPING PACKAGE
	12 C 502	SITE - DETAILS - SEE IFC YARD PIPING PACKAGE
	12 C 503	SITE - LIFT STATION; PLAN AND SECTION - SEE IFC YARD PIPING PACKAGE
	12 C 601	SITE - OVERALL; HORIZONTAL ALIGNMENT TABLES 1 - SEE IFC YARD PIPING PACKAGE
	12-C-602	SITE - OVERALL; HORIZONTAL ALIGNMENT TABLES 2 - SEE IFC YARD PIPING PACKAGE
	12-C-603	SITE - OVERALL; PIPE FITTING TABLES 1 - SEE IFC YARD PIPING PACKAGE
	12-C-604	SITE - OVERALL; PIPE FITTING TABLES 2 - SEE IFC YARD PIPING PACKAGE
	12-C-605	SITE - OVERALL; PIPE FITTING, MANHOLE, AND CHEMICAL HANDHOLE TABLES - SEE IFC YARD PIPING
	12 C 606	SITE - OVERALL; VERTICAL CURVE TABLES 1 - SEE IFC YARD PIPING PACKAGE
	12 C 607	SITE - OVERALL; VERTICAL CURVE TABLES 2 - SEE IFC YARD PIPING PACKAGE
	12 C 608	SITE - OVERALL; VERTICAL CURVE TABLES 3 - SEE IFC YARD PIPING PACKAGE
	12-C-609	SITE - OVERALL; VERTICAL CURVE TABLES 4 - SEE IFC YARD PIPING PACKAGE
	12 C 610	SITE - OVERALL; VERTICAL CURVE TABLES 5 - SEE IFC YARD PIPING PACKAGE

LANDSCAPE

SHEET NO.	DRAWING NO.	DESCRIPTION
	10 L 001	SITE - OVERALL; LANDSCAPING COVER SHEET - FORTHCOMING
	10-L-101	SITE - SOUTH OPERATIONS AREA; LANDSCAPING PLAN - FORTHCOMING
	10 L 102	SITE - NORTH OPERATIONS AREA; LANDSCAPING PLAN - FORTHCOMING
	10 L 103	SITE - SOUTH PROCESS AREA; LANDSCAPING PLAN - FORTHCOMING
	10-L-104	SITE - NORTH PROCESS AREA; LANDSCAPING PLAN - FORTHCOMING
	10 L 501	SITE - OVERALL; LANDSCAPING DETAILS - FORTHCOMING
	11-L-111	SITE - SOUTH OPERATIONS AREA; IRRIGATION PLAN - FORTHCOMING
	11 L 112	SITE - NORTH OPERATIONS AREA; IRRIGATION PLAN - FORTHCOMING
	11-L-113	SITE - SOUTH PROCESS AREA; IRRIGATION PLAN - FORTHCOMING
	11 L 114	SITE - NORTH PROCESS AREA; IRRIGATION PLAN - FORTHCOMING
	11-L-511	SITE - OVERALL; IRRIGATION DETAILS - FORTHCOMING
	11 L 512	SITE - OVERALL; IRRIGATION DETAILS - FORTHCOMING

CIVIL MECHANICAL

SHEET NO.	DRAWING NO.	DESCRIPTION
19	00 M 500	GENERAL; CIVIL MECHANICAL LEGENDS AND NOTES
20	00-M-501	GENERAL; CIVIL MECHANICAL DETAILS
21	00-M-502	GENERAL; CIVIL MECHANICAL DETAILS
22	00 M 503	GENERAL; CIVIL MECHANICAL DETAILS
23	00 M 504	GENERAL; CIVIL MECHANICAL DETAILS
24	00 M 505	GENERAL; CIVIL MECHANICAL DETAILS
25	00-M-506	GENERAL; CIVIL MECHANICAL DETAILS
26	00-M-507	GENERAL; CIVIL MECHANICAL DETAILS
27	00 M 508	GENERAL; CIVIL MECHANICAL DETAILS
28	00 M 509	GENERAL; CIVIL MECHANICAL DETAILS
29	00 M 510	GENERAL; CIVIL MECHANICAL DETAILS
30	00-M-511	GENERAL; CIVIL MECHANICAL DETAILS
31	00-M-512	GENERAL; CIVIL MECHANICAL DETAILS
32	00 M 513	GENERAL; CIVIL MECHANICAL DETAILS
33	00 M 514	GENERAL; CIVIL MECHANICAL DETAILS
34	00 M 515	GENERAL; CIVIL MECHANICAL DETAILS
35	00-M-601	PIPE SUPPORT DETAILS 1
36	00-M-602	PIPE SUPPORT DETAILS 2
37	00 M 603	PIPE SUPPORT DETAILS 3
38	20 M 001	HEADWORKS AREA - OVERALL; 3D VIEWS
39	20 M 101	HEADWORKS AREA - OVERALL; OPERATING LEVEL PLAN
40	20-M-301	HEADWORKS AREA - OVERALL; SECTIONS
41	21-M-101	HEADWORKS AREA - HEADWORKS; PLAN
42	22-M-101	HEADWORKS AREA - FINE SCREENS; PLAN
43	22 M 301	HEADWORKS AREA - FINE SCREENS; SECTIONS AND DETAILS 1
44	23 M 101	HEADWORKS AREA - ODOR CONTROL; PLAN, SECTIONS, AND DETAILS
45	30 M 001	TREATMENT AREA - OVERALL; 3D VIEWS
46	30-M-101	TREATMENT AREA - OVERALL; OPERATING LEVEL PLAN
47	30-M-301	TREATMENT AREA - OVERALL; SECTIONS
48	31 M 101	TREATMENT AREA - BNR BASINS; UPPER LEVEL PLAN
49	31 M 102	TREATMENT AREA - BNR BASINS; MIDDLE LEVEL PLAN
50	31 M 103	TREATMENT AREA - BNR BASINS; LOWER LEVEL PLAN
51	31-M-301	TREATMENT AREA - BNR BASINS; SECTIONS AND DETAILS 1
52	32-M-101	TREATMENT AREA - MBR SYSTEM; UPPER LEVEL PLAN
53	32 M 102	TREATMENT AREA - MBR SYSTEM; LOWER LEVEL PLAN
54	32 M 301	TREATMENT AREA - MBR SYSTEM; SECTIONS
55	33 M 101	TREATMENT AREA - RO FEED TANKS; OPERATING LEVEL PLAN AND SECTIONS
56	34-M-101	TREATMENT AREA - RECYCLED WATER PUMP; OPERATING LEVEL PLAN AND SECTIONS
57	50-M-001	RO/UV BUILDING - OVERALL; 3D VIEWS
58	50 M 101	RO/UV BUILDING - OVERALL; OPERATING LEVEL PLAN
59	50 M 301	RO/UV BUILDING - OVERALL; SECTIONS
60	51 M 101	RO/UV BUILDING - RO SYSTEM; MEMBRANE RACKS PLAN
61	51-M-102	RO/UV BUILDING - RO SYSTEM; CIP & FLUSH SYSTEMS PLAN
62	51-M-301	RO/UV BUILDING - RO SYSTEM; SECTIONS AND DETAILS 1
63	51 M 302	RO/UV BUILDING - RO SYSTEM; SECTIONS AND DETAILS 2
64	52 M 101	RO/UV BUILDING - UV SYSTEM; REACTOR SYSTEM PLAN
65	52 M 301	RO/UV BUILDING - UV SYSTEM; SECTIONS AND DETAILS 1
66	60-M-001	PRODUCT WATER AREA - OVERALL; 3D VIEWS
67	60-M-101	PRODUCT WATER AREA - OVERALL; OPERATING LEVEL PLAN
68	61 M 101	PRODUCT WATER AREA - CALCITE CONTACTOR; PLAN
69	61 M 301	PRODUCT WATER AREA - CALCITE CONTACTOR; SECTIONS AND DETAILS
70	62 M 101	PRODUCT WATER AREA - PRODUCT WATER STORAGE TANK; PLAN, SECTIONS, AND DETAILS
71	63-M-101	PRODUCT WATER AREA - IPP PRODUCT WATER PUMP STATION; PLAN
72	63-M-301	PRODUCT WATER AREA - IPP PRODUCT WATER PUMP STATION; SECTIONS & DETAILS 1
73	64 M 101	PRODUCT WATER AREA - OUTFALL PUMP STATION; PLAN
74	64 M 301	PRODUCT WATER AREA - OUTFALL PUMP STATION; SECTIONS & DETAILS 1
75	65 M 102	PRODUCT WATER AREA - DECHLORINATION FACILITY; PLAN, SECTIONS, AND DETAILS
76	70-M-001	RESIDUALS AREA - OVERALL; 3D VIEWS
77	71-M-101	RESIDUALS AREA - SLUDGE HOLDING AND SAFE SETTLE TANKS; OPERATING LEVEL PLAN
78	71 M 301	RESIDUALS AREA - SLUDGE HOLDING AND SAFE SETTLE TANKS; SECTIONS & DETAILS 1
79	72 M 101	RESIDUALS AREA - DEWATERING FACILITY; PLAN
80	72 M 301	RESIDUALS AREA - DEWATERING FACILITY; SECTIONS & DETAILS 1
81	73-M-101	RESIDUALS AREA - SAFE FILTER SYSTEM; PLAN, SECTIONS, & DETAILS
82	80-M-101	ELECTRICAL BUILDING - OVERALL; PLAN AND SECTIONS
83	90 M 001	CHEMICAL FACILITY - OVERALL; 3D VIEWS
84	90 M 101	CHEMICAL FACILITY - OVERALL; PLAN
85	90 M 301	CHEMICAL FACILITY - OVERALL; SECTIONS AND DETAILS 1

PROCESS AND INSTRUMENTATION

SHEET NO.	DRAWING NO.	DESCRIPTION
86	00-I-001	P&ID - LEGEND AND ABBREVIATIONS - SHEET 1
87	00-I-002	P&ID - LEGEND AND ABBREVIATIONS - SHEET 2
88	00 I 003	P&ID - LEGEND AND ABBREVIATIONS - SHEET 3
89	00 I 501	INSTALLATION DETAILS 1
90	00-I-502	INSTALLATION DETAILS 2
91	00-I-503	INSTALLATION DETAILS 3
92	00 I 504	INSTALLATION DETAILS 4
93	00 I 505	WATER QUALITY STATION DETAIL
94	00-I-701	OVERALL FIBER OPTIC NETWORK DIAGRAM
95	00-I-702	PLANT CONTROL SYSTEM NETWORK DIAGRAM
96	00-I-703	WIRELESS NETWORK DIAGRAM
97	00 I 704	OFFICE NETWORK AND TELEPHONE SYSTEM DIAGRAM
98	00-I-705	SECURITY DIAGRAM
99	21-I-001	HEADWORKS AREA - HEADWORKS; TRAIN 1
100	21-I-002	HEADWORKS AREA - HEADWORKS; TRAIN 2
101	22 I 001	HEADWORKS AREA - FINE SCREENS; SAFE DIVERSION BOX & FINE SCREENS
102	23-I-001	HEADWORKS AREA - ODOR CONTROL; ODOR CONTROL SYSTEM
103	31-I-001	TREATMENT AREA - BNR BASINS; BASIN 1 & BAS DFOX
104	31 I 002	TREATMENT AREA - BNR BASINS; BASIN 2
105	31 I 003	TREATMENT AREA - BNR BASINS; WAS SYSTEM
106	31 I 004	TREATMENT AREA - BNR BASINS; PROCESS AIR BLOWERS
107	32-I-001	TREATMENT AREA - MBR SYSTEM; MEMBRANE BASIN 1
108	32 I 002	TREATMENT AREA - MBR SYSTEM; MEMBRANE BASIN 2
109	32 I 003	TREATMENT AREA - MBR SYSTEM; FILTRATE PUMP, BASIN 1
110	32-I-004	TREATMENT AREA - MBR SYSTEM; FILTRATE PUMP, BASIN 2
111	32-I-005	TREATMENT AREA - MBR SYSTEM; FILTRATE MANIFOLD
112	32-I-006	TREATMENT AREA - MBR SYSTEM; MBR SCOUR AIR BLOWERS
113	32 I 007	TREATMENT AREA - MBR SYSTEM; TANK DRAIN PUMP
114	32-I-008	TREATMENT AREA - MBR SYSTEM; AIR COMPRESSOR
115	33-I-001	TREATMENT AREA - RO FEED TANKS; RO FEED TANKS
116	34-I-001	TREATMENT AREA - PLANT RECYCLED WATER PUMP STATION; PLANT RECYCLED WATER PUMPS
117	51 I 001	RO/UV BUILDING - RO SYSTEM; RO FILLD CONDITIONING SYSTEM
118	51 I 002	RO/UV BUILDING - RO SYSTEM; RO CARTRIDGE FILTERS
119	51-I-003	RO/UV BUILDING - RO SYSTEM; RO UNIT 1
120	51 I 004	RO/UV BUILDING - RO SYSTEM; RO UNIT 2
121	51 I 005	RO/UV BUILDING - RO SYSTEM; RO UNIT 3
122	51 I 006	RO/UV BUILDING - RO SYSTEM; RO PERMEATE/CONCENTRATE, UNIT 1
123	51-I-007	RO/UV BUILDING - RO SYSTEM; RO PERMEATE/CONCENTRATE, UNIT 2
124	51 I 008	RO/UV BUILDING - RO SYSTEM; RO PERMEATE/CONCENTRATE, UNIT 3
125	51 I 009	RO/UV BUILDING - RO SYSTEM; RO CIP TANKS
126	51 I 010	RO/UV BUILDING - RO SYSTEM; RO CIP PUMPS
127	51-I-011	RO/UV BUILDING - RO SYSTEM; RO FLUSH SYSTEM
128	52-I-001	RO/UV BUILDING - UV SYSTEM; UV/AOP SYSTEM
129	61 I 001	PRODUCT WATER AREA - CALCITE CONTACTOR; CALCITE REMINERALIZATION SYSTEM
130	62-I-001	PRODUCT WATER AREA - IPP PRODUCT WATER; IPP PRODUCT WATER STORAGE TANK
131	63-I-001	PRODUCT WATER AREA - IPP PRODUCT WATER; IPP PRODUCT WATER PUMPS
132	64-I-001	PRODUCT WATER AREA - OUTFALL PUMP STATION; OUTFALL TANK & PUMPS
133	65 I 001	PRODUCT WATER AREA - DISINFECTION SYSTEM; OUTFALL DISINFECTION SYSTEM
134	71 I 001	RESIDUALS AREA - SLUDGE & SAFE SETTLE TANKS; SLUDGE HOLDING TANKS
135	71-I-002	RESIDUALS AREA - SLUDGE & SAFE SETTLE TANKS; SAFE SETTLE SYSTEM
136	71-I-003	RESIDUALS AREA - SLUDGE & SAFE SETTLE TANKS; SLUDGE HOLDING TANK BLOWERS
137	72 I 001	RESIDUALS AREA - DEWATERING SYSTEM; DEWATERING SLUDGE FEED PUMPS
138	72 I 002	RESIDUALS AREA - DEWATERING SYSTEM; BELT FILTER PRESS
139	73-I-001	RESIDUALS AREA - SAFE FILTER SYSTEM; SAFE SYSTEM
140	81-I-001	MISCELLANEOUS - GENERATOR; GENERATOR SYSTEM
141	81 I 002	MISCELLANEOUS - ELECTRICAL; SWITCHBOARD & MCCS
142	90 I 001	CHEMICALS - CHEMICAL FACILITY; SODIUM HYPOCHLORITE STORAGE & FEED 1
143	90-I-002	CHEMICALS - CHEMICAL FACILITY; SODIUM HYPOCHLORITE STORAGE & FEED 2
144	90-I-003	CHEMICALS - CHEMICAL FACILITY; SODIUM HYDROXIDE STORAGE & FEED
145	90 I 004	CHEMICALS - CHEMICAL FACILITY; SODIUM BISULFITE STORAGE & FEED
146	90 I 005	CHEMICALS - CHEMICAL FACILITY; ANTISCALANT STORAGE & FEED
147	90-I-006	CHEMICALS - CHEMICAL FACILITY; CITRIC ACID STORAGE & FEED
148	90-I-007	CHEMICALS - CHEMICAL FACILITY; SULFURIC ACID STORAGE & FEED
149	90 I 008	CHEMICALS - DEWATERING AREA; THICKENING POLYMER STORAGE & FEED
150	90 I 009	CHEMICALS - DEWATERING AREA; LIQUID AMMONIA SULFATE
151	95 I 001	SANITARY PUMPING SYSTEM

NO.	BY	CHK	APP
0	KEZ	RWF	EVB

REVISIONS AND RECORD OF USE

DATE	ISSUED FOR CONSTRUCTION
5/19/2020	

REGISTERED PROFESSIONAL ENGINEER
ERIK V. BEVINGTON
No. C 78836
CIVIL
STATE OF CALIFORNIA
5/20/2020

BLACK & VEATCH

JOINT VENTURE

BLACK & VEATCH

FILANC

CITY OF MORRO BAY
MORRO BAY WATER
RECLAMATION FACILITY (WRF)

GENERAL
SHEET LIST 1

DESIGNED: EVB, KEZ
DETAILED: MAK
CHECKED: EVB
APPROVED: EVB
DATE: 5/19/2020

0 1/2 1
IF THIS BAR DOES NOT MEASURE 1" THEN DRAWING IS NOT TO FULL SCALE

PROJECT NO.
400530

00-G-002
SHEET
2 OF 412

D400530
FD81203_PW

STRUCTURAL

SHEET NO.	DRAWING NO.	DESCRIPTION
152	00 S 001	STRUCTURAL GENERAL LEGENDS & ABBREVIATIONS
153	00 S 002	STRUCTURAL GENERAL NOTES
154	00-S-101	STRUCTURAL STANDARD DETAILS
155	00-S-102	STRUCTURAL STANDARD DETAILS
156	00 S 103	STRUCTURAL STANDARD DETAILS
157	00 S 104	STRUCTURAL STANDARD DETAILS
158	00 S 105	STRUCTURAL STANDARD DETAILS
159	00 S 106	STRUCTURAL STANDARD DETAILS
160	00-S-107	STRUCTURAL STANDARD DETAILS
161	00-S-108	STRUCTURAL STANDARD DETAILS
162	13-S-001	WASH RACK; 3D VIEWS
163	13 S 101	WASH RACK; PLAN
164	13 S 301	WASH RACK; SECTIONS & DETAILS
165	14-S-001	MBR PARKING CANOPY; 3D VIEW
166	14-S-101	MBR PARKING CANOPY; PLAN
167	14-S-301	MBR PARKING CANOPY; SECTIONS & DETAILS
168	15 S 001	MAIN AND COLLECTION VEHICLES EQUIPMENT STORAGE; 3D VIEW
169	15 S 101	WATER AND COLLECTION VEHICLES EQUIPMENT STORAGE; PLAN
170	15 S 301	WATER AND COLLECTION VEHICLES EQUIPMENT STORAGE; SECTIONS & DETAILS
171	16-S-001	WATER AND COLLECTION SUPPLIES STORAGE SHED; 3D VIEW
172	16-S-101	WATER AND COLLECTION SUPPLIES STORAGE SHED; PLAN
173	16-S-301	WATER AND COLLECTION SUPPLIES STORAGE SHED; SECTIONS & DETAILS
174	17 S 001	OUTDOOR STORAGE AREA; 3D VIEW
175	17 S 101	OUTDOOR STORAGE AREA; PLAN
176	17-S-301	OUTDOOR STORAGE AREA; SECTIONS & DETAILS
177	20-S-001	HEADWORKS AREA - OVERALL; 3D VIEW
178	20-S-101	HEADWORKS AREA - OVERALL; PLAN
179	20 S 301	HEADWORKS AREA - OVERALL; SECTIONS & DETAILS 1
180	20 S 302	HEADWORKS AREA - OVERALL; SECTIONS & DETAILS 2
181	24-S-001	HEADWORKS AREA - VACTOR WASHDOWN; 3D VIEW
182	24-S-101	HEADWORKS AREA - VACTOR WASHDOWN; PLAN
183	24-S-301	HEADWORKS AREA - VACTOR WASHDOWN; SECTIONS & DETAILS
184	30-S-001	TREATMENT AREA - OVERALL; 3D VIEWS
185	30 S 101	TREATMENT AREA - OVERALL, OPERATING LEVEL PLAN
186	30 S 102	TREATMENT AREA - OVERALL; LOWER PLAN
187	30-S-301	TREATMENT AREA - OVERALL; SECTIONS & DETAILS 1
188	30-S-302	TREATMENT AREA - OVERALL; SECTIONS & DETAILS 2
189	30-S-303	TREATMENT AREA - OVERALL; SECTIONS & DETAILS 3
190	30 S 304	TREATMENT AREA - OVERALL; SECTIONS & DETAILS 4
191	30 S 305	TREATMENT AREA - OVERALL; SECTIONS & DETAILS 5
192	30-S-306	TREATMENT AREA - OVERALL; SECTIONS & DETAILS 6
193	30-S-307	TREATMENT AREA - OVERALL; SECTIONS & DETAILS 7
194	50-S-001	ROJUV BUILDING - OVERALL; 3D VIEWS
195	50-S-101	ROJUV BUILDING - OVERALL; PLAN
196	50 S 301	ROJUV BUILDING - OVERALL; SECTIONS & DETAILS 1
197	50 S 302	ROJUV BUILDING - OVERALL; SECTIONS & DETAILS 2
198	50-S-303	ROJUV BUILDING - OVERALL; SECTIONS & DETAILS 3
199	61-S-001	PRODUCT WATER AREA - CALCITE CONTACTOR; 3D VIEW
200	61-S-101	PRODUCT WATER AREA - CALCITE CONTACTOR; PLAN
201	61 S 301	PRODUCT WATER AREA - CALCITE CONTACTOR; SECTIONS & DETAILS
202	63 S 001	PRODUCT WATER AREA - IPR AND OUTFALL PUMP STATION; 3D VIEW
203	63-S-101	PRODUCT WATER AREA - IPR AND OUTFALL PUMP STATION; PLAN
204	63-S-301	PRODUCT WATER AREA - IPR AND OUTFALL PUMP STATION; SECTIONS & DETAILS
205	71-S-001	RESIDUALS AREA - OVERALL; 3D VIEW
206	71-S-101	RESIDUALS AREA - SLUDGE HOLDING TANKS & SAFE SETTLE TANK; PLAN
207	71 S 301	RESIDUALS AREA - SLUDGE HOLDING TANKS & SAFE SETTLE TANK; SECTIONS & DETAILS 1
208	71 S 302	RESIDUALS AREA - SLUDGE HOLDING TANKS & SAFE SETTLE TANK; SECTIONS & DETAILS 2
209	71-S-303	RESIDUALS AREA - SLUDGE HOLDING TANKS & SAFE SETTLE TANK; SECTIONS & DETAILS 3
210	72-S-001	RESIDUALS AREA - DEWATERING FACILITY; 3D VIEWS
211	72-S-101	RESIDUALS AREA - DEWATERING FACILITY; PLAN
212	72 S 301	RESIDUALS AREA - DEWATERING FACILITY; SECTIONS & DETAILS 1
213	72 S 302	RESIDUALS AREA - DEWATERING FACILITY; SECTIONS & DETAILS 2
214	73-S-001	RESIDUALS AREA - SAFE FILTER SYSTEM; 3D VIEWS
215	73-S-101	RESIDUALS AREA - SAFE FILTER SYSTEM; PLAN
216	73-S-301	RESIDUALS AREA - SAFE FILTER SYSTEM; SECTIONS & DETAILS
217	80-S-001	ELECTRICAL BUILDING - OVERALL; 3D VIEWS
218	80 S 101	ELECTRICAL BUILDING - OVERALL; PLAN
219	80 S 301	ELECTRICAL BUILDING - OVERALL; SECTIONS & DETAILS 1
220	90-S-001	CHEMICALS - CHEMICAL FACILITY; 3D VIEW
221	90-S-101	CHEMICALS - CHEMICAL FACILITY; PLAN
222	90-S-301	CHEMICALS - CHEMICAL FACILITY; SECTIONS & DETAILS 1
223	90 S 302	CHEMICALS - CHEMICAL FACILITY; SECTIONS & DETAILS 2
224	90 S 303	CHEMICALS - CHEMICAL FACILITY; SECTIONS & DETAILS 3
225	90-S-304	CHEMICALS - CHEMICAL FACILITY; SECTIONS & DETAILS 4
226	95-S-001	OPERATIONS BUILDING; 3D VIEWS
227	95-S-101	OPERATIONS BUILDING; PLAN
228	95-S-301	OPERATIONS BUILDING; SECTIONS & DETAILS
229	96 S 001	MAINTENANCE BUILDING; 3D VIEWS
230	96 S 101	MAINTENANCE BUILDING; PLAN
231	96 S 301	MAINTENANCE BUILDING; SECTIONS & DETAILS

ARCHITECTURAL

SHEET NO.	DRAWING NO.	DESCRIPTION
232	00-A-001	ARCHITECTURAL DETAILS
233	00 A 002	ARCHITECTURAL DETAILS
234	00 A 003	ARCHITECTURAL DETAILS
235	00 A 004	ARCHITECTURAL DETAILS
236	00-A-005	ARCHITECTURAL DETAILS
237	00-A-006	ARCHITECTURAL DETAILS
238	00-A-007	ARCHITECTURAL DETAILS
239	14-A-001	MBR PARKING CANOPY; PERSPECTIVES
240	14-A-101	MBR PARKING CANOPY; PLAN
241	14 A 201	MBR PARKING CANOPY; ELEVATIONS
242	15 A 001	MBR WATER AND COLLECTION VEHICLES EQUIPMENT; PERSPECTIVES
243	15 A 101	MBR WATER AND COLLECTION VEHICLES EQUIPMENT; TOP OF CONCRETE PLAN
244	15 A 201	MBR WATER AND COLLECTION VEHICLES EQUIPMENT; ELEVATIONS
245	16 A 001	WATER AND COLLECTION SUPPLIES STORAGE SHED; PERSPECTIVES
246	16-A-101	WATER AND COLLECTION SUPPLIES STORAGE SHED; LIFE SAFETY PLAN
247	16-A-102	WATER AND COLLECTION SUPPLIES STORAGE SHED; OPERATING FLOOR PLAN
248	16-A-201	WATER AND COLLECTION SUPPLIES STORAGE SHED; BUILDING ELEVATIONS
249	16-A-301	WATER AND COLLECTION SUPPLIES STORAGE SHED; WALL SECTIONS
250	16 A 601	WATER AND COLLECTION SUPPLIES STORAGE SHED; SCHEDULES
251	17 A 001	PERMANENT OPEN STORAGE; PERSPECTIVES
252	17-A-101	PERMANENT OPEN STORAGE; OVERALL AND ENLARGED PLANS
253	17-A-201	PERMANENT OPEN STORAGE; ELEVATIONS
254	17-A-202	PERMANENT OPEN STORAGE; ELEVATIONS
255	50-A-001	ROJUV BUILDING; PERSPECTIVES
256	50-A-007	ROJUV BUILDING; ENERGY CODE COMPLIANCE
257	50 A 101	ROJUV BUILDING; LIFE SAFETY PLAN
258	50 A 102	ROJUV BUILDING; OPERATING FLOOR PLAN
259	50 A 201	ROJUV BUILDING; BUILDING ELEVATIONS
260	50 A 202	ROJUV BUILDING; BUILDING ELEVATIONS
261	50-A-301	ROJUV BUILDING; WALL SECTIONS
262	50-A-302	ROJUV BUILDING; WALL SECTIONS
263	50-A-303	ROJUV BUILDING; WALL SECTIONS
264	50-A-601	ROJUV BUILDING; SCHEDULES
265	72-A-001	RESIDUALS AREA; PERSPECTIVES
266	72 A 101	RESIDUALS AREA - DEWATERING FACILITY; OPERATING FLOOR PLAN
267	72 A 201	RESIDUALS AREA - DEWATERING FACILITY; ELEVATIONS
268	72 A 202	RESIDUALS AREA - DEWATERING FACILITY; ELEVATIONS
269	80 A 001	ELECTRICAL BUILDING; PERSPECTIVES
270	80-A-002	ELECTRICAL BUILDING; ENERGY CODE COMPLIANCE
271	80-A-101	ELECTRICAL BUILDING; LIFE SAFETY PLAN
272	80-A-102	ELECTRICAL BUILDING; OPERATING FLOOR PLAN
273	80-A-201	ELECTRICAL BUILDING; BUILDING ELEVATIONS
274	80 A 301	ELECTRICAL BUILDING; WALL SECTIONS
275	80-A-601	ELECTRICAL BUILDING; SCHEDULES
276	90 A 001	CHEMICAL FACILITY; PERSPECTIVES
277	90 A 101	CHEMICAL FACILITY; OPERATING FLOOR PLAN
278	90 A 201	CHEMICAL FACILITY; BUILDING ELEVATIONS
279	90-A-202	CHEMICAL FACILITY; BUILDING ELEVATIONS
280	95-A-001	OPERATIONS BUILDING; PERSPECTIVES
281	95-A-002	OPERATIONS BUILDING; ENERGY CODE COMPLIANCE
282	95-A-003	OPERATIONS BUILDING; ENERGY CODE COMPLIANCE
283	95-A-101	OPERATIONS BUILDING; OPERATING FLOOR LIFE SAFETY PLAN
284	95 A 102	OPERATIONS BUILDING; OPERATING FLOOR PLAN
285	95 A 103	OPERATIONS BUILDING; ROOF PLAN
286	95 A 104	OPERATIONS BUILDING; REFLECTED CEILING PLAN
287	95 A 201	OPERATIONS BUILDING; BUILDING ELEVATIONS
288	95 A 202	OPERATIONS BUILDING; BUILDING ELEVATIONS
289	95-A-301	OPERATIONS BUILDING; WALL SECTIONS
290	95-A-302	OPERATIONS BUILDING; WALL SECTIONS
291	95-A-303	OPERATIONS BUILDING; WALL SECTIONS
292	95-A-401	OPERATIONS BUILDING; ENLARGED OPERATING FLOOR PLAN - EAST
293	95-A-402	OPERATIONS BUILDING; ENLARGED OPERATING FLOOR PLAN - WEST
294	95 A 403	OPERATIONS BUILDING; ENLARGED RESTROOM PLANS
295	95 A 404	OPERATIONS BUILDING; RESTROOM AND LOCKER ROOM ELEVATIONS
296	95 A 405	OPERATIONS BUILDING; RESTROOM AND LOCKER ROOM ELEVATIONS
297	95 A 406	OPERATIONS BUILDING; ENLARGED CASEWORK PLANS AND ELEVATIONS
298	95-A-407	OPERATIONS BUILDING; ENLARGED CASEWORK PLANS AND ELEVATIONS
299	95-A-408	OPERATIONS BUILDING; ENLARGED CASEWORK PLANS AND ELEVATIONS
300	95-A-601	OPERATIONS BUILDING; SCHEDULES
301	96-A-001	MAINTENANCE BUILDING; PERSPECTIVES
302	96-A-002	MAINTENANCE BUILDING; ENERGY CODE COMPLIANCE
303	96 A 101	MAINTENANCE BUILDING; LIFE SAFETY PLAN
304	96 A 102	MAINTENANCE BUILDING; OPERATING FLOOR PLAN
305	96 A 103	MAINTENANCE BUILDING; CLERESTORY PLANS
306	96-A-104	MAINTENANCE BUILDING; ROOF PLANS
307	96 A 105	MAINTENANCE BUILDING; REFLECTED CEILING PLAN
308	96-A-201	MAINTENANCE BUILDING; ELEVATIONS
309	96-A-202	MAINTENANCE BUILDING; ELEVATIONS
310	96-A-301	MAINTENANCE BUILDING; WALL SECTIONS
311	96 A 302	MAINTENANCE BUILDING; WALL SECTIONS
312	96-A-401	MAINTENANCE BUILDING; INTERMEDIATE FLOOR PLAN
313	96 A 402	MAINTENANCE BUILDING; LABORATORY PLAN AND ELEVATIONS
314	96 A 403	MAINTENANCE BUILDING; LABORATORY ELEVATIONS
315	96 A 404	MAINTENANCE BUILDING; ENLARGED LABORATORY ELEVATIONS
316	96-A-405	MAINTENANCE BUILDING; ENLARGED RESTROOM PLAN AND ELEVATIONS
317	96-A-601	MAINTENANCE BUILDING; SCHEDULES

PLUMBING

SHEET NO.	DRAWING NO.	DESCRIPTION
318	00 P 001	PLUMBING LEGEND, ABBREVIATIONS, AND GENERAL NOTES
319	00-P-501	PLUMBING; DETAILS
320	00-P-601	PLUMBING SCHEDULES
321	16 P 101	WATER AND COLLECTION SUPPLIES STORAGE SHED; PLAN AND RISER ISOMETRICS
322	50 P 101	ROJUV BUILDING; PLAN AND ENLARGED ISOMETRIC
323	50-P-701	ROJUV BUILDING; RISER ISOMETRICS
324	72-P-101	RESIDUALS AREA; DEWATERING FACILITY; PLAN AND RISER ISOMETRICS
325	90 P 101	CHEMICAL FACILITY; PLAN AND RISER ISOMETRIC
326	95 P 101	OPERATIONS BUILDING; OVERALL OPERATING FLOOR PLAN
327	95-P-401	OPERATIONS BUILDING; ENLARGED OPERATING FLOOR PLAN - WEST
328	95-P-402	OPERATIONS BUILDING; ENLARGED OPERATING FLOOR PLAN - EAST
329	95-P-701	OPERATIONS BUILDING; RISER ISOMETRICS - SANITARY
330	95 P 702	OPERATIONS BUILDING; RISER ISOMETRICS - WATER
331	96-P-101	MAINTENANCE BUILDING; PLAN AND ENLARGED PLAN
332	96-P-701	MAINTENANCE BUILDING; RISER ISOMETRICS

HVAC

SHEET NO.	DRAWING NO.	DESCRIPTION
333	00-H-001	HVAC LEGEND, ABBREVIATIONS, AND GENERAL NOTES
334	00 H 501	HVAC; DETAILS
335	00 H 601	HVAC; SCHEDULES
336	00-H-602	HVAC; SEQUENCE OF OPERATIONS
337	00-H-603	HVAC; TITLE 24 - COMPLIANCE FORM
338	00 H 604	HVAC; TITLE 24 - COMPLIANCE FORM
339	00-H-605	HVAC; TITLE 24 - COMPLIANCE FORM
340	00-H-701	HVAC; SCHEMATICS
341	50 H 101	ROJUV BUILDING; PLAN
342	80-H-101	ELECTRICAL BUILDING; PLAN
343	95-H-101	OPERATIONS BUILDING; OVERALL OPERATING FLOOR PLAN
344	95 H 401	OPERATIONS BUILDING; ENLARGED OPERATING FLOOR PLAN - WEST
345	95 H 402	OPERATIONS BUILDING; ENLARGED OPERATING FLOOR PLAN - EAST
346	96-H-101	MAINTENANCE BUILDING; PLAN

FIRE PROTECTION

SHEET NO.	DRAWING NO.	DESCRIPTION
347	95 F 001	OPERATIONS BUILDING - FIRE SUPPRESSION SYSTEM; SCHEMATIC
348	95 F 101	OPERATIONS BUILDING - FIRE SUPPRESSION SYSTEM; PLAN
349	96-F-001	MAINTENANCE BUILDING - FIRE SUPPRESSION SYSTEM; SCHEMATIC
350	96 F 101	MAINTENANCE BUILDING - FIRE SUPPRESSION SYSTEM; PLAN

ELECTRICAL

SHEET NO.	DRAWING NO.	DESCRIPTION
351	00 E 001	GENERAL; LEGENDS
352	00-E-002	GENERAL; ABBREVIATIONS AND GENERAL NOTES
353	00-E-501	GENERAL; INSTALLATION DETAILS
354	00 E 502	GENERAL; INSTALLATION DETAILS
355	00-E-503	GENERAL; INSTALLATION DETAILS
356	00 E 504	GENERAL; INSTALLATION DETAILS
357	00 E 731	GENERAL; TYPICAL ELECTRICAL VALVE SCHEMATICS
358	10-E-101	SITE - OVERALL POWER PLAN
359	10-E-111	SITE - OVERALL LIGHTING PLAN
360	10-E-501	SITE - OVERALL DUCTBANK SCHEDULE
361	10 E 502	SITE OVERALL DUCTBANK SCHEDULE
362	10 E 503	SITE OVERALL DUCTBANK SECTION
363	15-E-601	VEHICLE STORAGE EQUIPMENT POWER PANEL SCHEDULE
364	21-E-101	HEADWORKS AREA POWER AND GROUNDING PLAN
365	21-E-711	HEADWORKS AREA 21-CTRL-LCP-0001 ONE-LINE DIAGRAM
366	31 E 101	TREATMENT AREA - OMR BASINS POWER AND GROUNDING PLAN
367	31 E 711	TREATMENT AREA 31 CTRL LCP 0001 ONE LINE DIAGRAM
368	31 E 712	TREATMENT AREA 31 CTRL LCP 0001 ONE LINE DIAGRAM
369	32-E-101	TREATMENT AREA - MBR SYSTEM POWER AND GROUNDING PLAN
370	32-E-711	TREATMENT AREA 32-MBR-LCP-0001 ONE-LINE DIAGRAM
371	32 E 712	TREATMENT AREA 32 MBR MCC 0002 ONE LINE DIAGRAM
372	33 E 101	TREATMENT AREA - PD TITE TANKS POWER AND GROUNDING PLAN
373	34 E 101	TREATMENT AREA - RECYCLED WATER PUMPS POWER AND GROUNDING PLAN
374	50-E-601	ROJUV BUILDING POWER PANELS SCHEDULE
375	50-E-702	ROJUV BUILDING 50-ELEC-MCC-0001 ONE-LINE DIAGRAM
376	50 E 703	ROJUV BUILDING 50 TITE MCC 0001 ONE LINE DIAGRAM
377	50 E 711	ROJUV BUILDING 51 CTRL LCP 0001 ONE LINE DIAGRAM
378	50 E 712	ROJUV BUILDING 51 PD LCP 0001 AND MISCELLANEOUS ONE LINE DIAGRAM
379	50 E 721	ROJUV BUILDING SCHEMATICS
380	51-E-101	ROJUV BUILDING - PD SYSTEM POWER AND GROUNDING PLAN
381	51-E-102	ROJUV BUILDING - PD CIP & FLUSH SYSTEMS POWER AND GROUNDING PLAN
382	51-E-103	ROJUV BUILDING - ELECTRICAL ROOM POWER AND GROUNDING PLAN
383	52 E 101	ROJUV BUILDING - UV SYSTEM POWER AND GROUNDING PLAN
384	61 E 101	PRODUCT WATER AREA - CALCITE CONTACTOR POWER AND GROUNDING PLAN
385	62-E-101	PRODUCT WATER AREA -PRODUCT WATER STORAGE TANK POWER AND GROUNDING PLAN
386	63-E-101	PRODUCT WATER AREA - IPR PRODUCT WATER PUMP STATION POWER AND GROUNDING PLAN
387	64-E-101	PRODUCT WATER AREA - OUTFALL PUMPS STATION POWER AND GROUNDING PLAN
388	71 E 101	RESIDUALS AREA - SLUDGE HOLDING TANKS & SAFE SETTLE TANK AREA POWER AND GROUNDING PLAN
389	72 E 101	RESIDUALS AREA - DEWATERING FACILITY POWER AND GROUNDING PLAN
390	72 E 701	RESIDUALS AREA 72 CTRL LCP 0001 ONE LINE DIAGRAM
391	72-E-702	RESIDUALS AREA 72-FSWL-LCP-0001 ONE-LINE DIAGRAM
392	73-E-101	RESIDUALS AREA - SAFE FILTER SYSTEM POWER AND GROUNDING PLAN
393	80 E 101	ELECTRICAL BUILDING POWER AND GROUNDING PLAN
394	80 E 601	ELECTRICAL BUILDING POWER PANELS SCHEDULE
395	80 E 701	ELECTRICAL BUILDING 80 ELEC SWB 0001 ONE LINE DIAGRAM
396	80-E-702	ELECTRICAL BUILDING 80-ELEC-MCC-0001 ONE-LINE DIAGRAM
397	80-E-703	ELECTRICAL BUILDING 80-ELEC-MCC-0002 ONE-LINE DIAGRAM
398	80 E 704	ELECTRICAL BUILDING 80 ELEC MCC 0003 ONE LINE DIAGRAM
399	80 E 711	ELECTRICAL BUILDING 80 CTRL LCP 0001 AND MISCELLANEOUS ONE LINE DIGRAM
400	80 E 721	ELECTRICAL BUILDING SCHEMATICS
401	90-E-101	CHEMICAL FACILITY POWER AND GROUNDING PLAN
402	90-E-601	CHEMICAL FACILITY POWER PANELS SCHEDULE
403	90-E-711	CHEMICAL FACILITY 90-CTRL-LCP-0001 ONE-LINE DIAGRAM
404	95-E-101	OPERATIONS BUILDING POWER AND GROUNDING
405	95 E 102	SANITARY LIFT STATION POWER AND GROUNDING PALN
406	95 E 111	OPERATIONS BUILDING LIGHTING PLAN
407	95-E-601	OPERATIONS BUILDING POWER PANELS SCHEDULE
408	95-E-711	OPERATIONS BUILDING MISCELLANEOUS ONE LINE DIAGRAMS
409	96-E-101	MAINTENANCE BUILDING POWER AND GROUNDING PLAN
410	96 E 111	MAINTENANCE BUILDING LIGHTING PLAN
411	96 E 601	MAINTENANCE BUILDING POWER PANELS SCHEDULE
412	96-E-711	MAINTENANCE BUILDING MISCELLANEOUS ONE LINE DIAGRAMS

NO.	BY	CHK	APP
0	KEZ	RWF	EVB

ISSUED FOR CONSTRUCTION — 5/19/2020

REVISIONS AND RECORD OF USE — DATE

REGISTERED PROFESSIONAL ENGINEER — ERICK V. BEVINGTON — No. C 78836 — CIVIL — STATE OF CALIFORNIA

5/20/2020

BLACK & VEATCH

JOINT VENTURE

BLACK & VEATCH

FILANC

CITY OF MORRO BAY
MORRO BAY WATER
RECLAMATION FACILITY (WRF)

GENERAL
SHEET LIST 2

DESIGNED: EVB, KEZ
DETAILED: MAK
CHECKED: EVB
APPROVED: EVB
DATE: 5/19/2020

0 1/2 1

IF THIS BAR DOES NOT MEASURE 1" THEN DRAWING IS NOT TO FULL SCALE

PROJECT NO.
400530

00-G-003
SHEET
3 OF 412

D400530
FD81203_PW

A	ACID, AMBER INDICATING LIGHT,AMP
AA	AIR-AERATION
AC	ALTERNATING CURRENT
AER	AERATION SYSTEM
AIR	PROCESS AIR
ALT	ALTERNATE, (IVE)
ALUM	ALUMINUM
AM	AMMETER
AMP	AMPERE
ANTI	ANTISCALANT
AS	AMMETER SWITCH
ATS	AUTOMATIC TRANSFER SWITCH
AUTO	AUTOMATIC
AWG	AMERICAN WIRE GAUGE
AWS	AERATED WAS
BLDG	BUILDING
BNR	BNR
C/L	CENTERLINE
CA	CITRIC ACID
CAKE	DEWATERED CAKE SLUDGE
CAL	CALCITE
CHANNEL	PROCESS CHANNEL
CIP	CAST IN PLACE
CIP	CAST IRON PIPE
CIPR	REVERSE OSMOSIS CIP RETURN
CIPS	REVERSE OSMOSIS CIP SUPPLY
CLR	CLEAR, (ANCE)
CMU	CONCRETE MASONRY UNIT
COMB	COMBINATION
CONC	CONCRETE
CONST	CONSTRUCTION
CONT	CONTINUOUS, CONTINUATION, CONTROL
CP	CONTROL PANEL
CS	CONTROL SWITCH, CONTROL STATION, CUP SINK
CSK	COUNTERSUNK, (INK)
CT	CERAMIC TILE, CYCLE TIMER
CT	CURRENT TRANSFORMER
CU	CUBIC
CU YD	CUBIC YARD
CW	COLD, WATER
D	DRAIN
DC	DIRECT CURRENT
DEPT	DEPARTMENT
DIA	DIAMETER
DIFF	DIFFUSER
DIM	DIMENSION
DIP	DUCTILE IRON PIPE
DIV	DIVISION
DMJ	DOUBLE MECHANICAL JOINT
DO	DISSOLVED OXYGEN
DR	DRAIN
DRN	DRAIN
DS	DOWNSPOUT
DV	DRAIN VALVE
DWG(S)	DRAWING(S)
DWL(S)	DOWEL(S)
DWT	DEWATERING
E	EAST, ELECTRICAL
EA	EACH
ECC	ECCENTRIC
EF	EACH FACE
EFF	EFFLUENT
EL	ELEVATION
ELEC	ELECTRIC, (AL)
ELEV	ELEVATION
EMER	EMERGENCY
EQ	EQUAL
EQUIP	EQUIPMENT
EW	EACH WAY
EXIST	EXISTING
EXP	EXPANSION, EXPOSED
EXP JT	EXPANSION JOINT
EXT	EXTENSION, EXTERIOR, EXTERNAL
F	FIRE PROTECTION WATER SYSTEM
FA	FOUL AIR
FBW	FILTER BACKWASH
FC	FLEXIBLE CONNECTION, FLOW CONTROL
FD	FLOOR DRAIN
FDN	FOUNDATION
FE	FIRE EXTINGUISHER
FEC	FIRE EXTINGUISHER CABINET
FF	REVERSE OSMOSIS FORWARD FLUSH
FH	FLAT HEAD, FIRE HYDRANT
FIG	FIGURE
FIW	FILTER INLET WASH
FL	FLOOR, FLOW LINE
FLEX	FLEXIBLE
FM	FORCE MAIN
FO	FUEL OIL
FOW	FILTERED OUTLET WATER
FPW	FIRE PROTECTION WATER
FRP	FIBERGLASS REINFORCED PLASTIC
FS	FAR SIDE, FLOOR SLEEVE, FLOAT SWITCH
FSCM	FILTER SCUM
FSW	FILTER SOLIDS WASTE
FT	FOOT
FTG	FOOTING
FUE	DIESEL FUEL
FURN	FURNISH, FURNISHED
FWD	FORWARD
G	GAS
GA	GAUGE
GAL	GALLON
GEN	GENERATOR FUEL
GEN	GENERAL, GENERATOR
GPM	GALLONS PER MINUTE
GRT	GRIT
GWB	GYPSUM WALLBOARD
GYP	GYPSUM
H	HIGH, HOUR, HYDROGEN
HDR	HEADER
HE	HEAT EXCHANGER
HEX	HEXAGONAL
HGT	HEIGHT
HH	HANDHOLE
HORIZ	HORIZONTAL
HP	HIGH POINT, HORSEPOWER
HR	HOUR, HANDRAIL
HS	HIGH STRENGTH
HSO4	SULFURIC ACID
HV	HOSE VALVE
HVAC	HEATING,VENTILATING AND AIR CONDITIONING
HW	HOT WATER

I	INDICATOR
IA	INSTRUMENT AIR
IF	INSIDE FACE
IN	INCHES
INC	INCORPORATED
INV	INVERT
IPR	INDIRECT POTABLE REUSE WATER
JB	JUNCTION BOX
IPS	IRON PIPE SIZE
JT	JOINT
K	KIPS
KV	KILOVOLT
KVA	KILOVOLT AMPERE
KW	KILOWATT
KWH	KILOWATT HOUR
L	LOUVER
LAB	LABORATORY
LAT	LEAVING AIR TEMPERATURE
LAT	LATERAL
LB(S)	POUNDS
LG	LENGTH, LONG
LO	LOUVER OPENING
LS	LEVEL SWITCH
LT	LEFT, LAB TABLE
MA	MILLIAMPERE
MAX	MAXIMUM
MCC	MOTOR CONTROL CENTER
MECH	MECHANICAL
MEM	MEMBRANE
MFF	MICROFILTRATION FILTRATE
MFR(S)	MANUFACTURER(S)
MG	MILLION GALLONS
MGD	MILLION GALLONS PER DAY
MH	MANHOLE
MIN	MINIMUM, MINUTE
MISC	MISCELLANEOUS
MJ	MECHANICAL JOINT
ML	MIXED LIQUOR
MP	METERING PUMP
MS	MACHINE SCREW
MSL	MEAN SEA LEVEL
MTD	MOUNTED
MTL	MATERIAL
N	NORTH
N/A	NOT APPLICABLE
N.O.	NORMALLY OPEN
NACL	SODIUM HYPOCHLORITE
NAOH	SODIUM HYDROXIDE
NC	NORMALLY CLOSED
NEUT	NEUTRAL
NF	NEAR FACE
NHS	SODIUM BISULFATE
NO.(S)	NUMBER(S)
NOCL	SODIUM HYPOCHLORITE
NPW	NONPOTABLE WATER
NS	NEAR SIDE
NTS	NOT TO SCALE
OC	ON CENTER, ODOR CONTROL
OD	OUTSIDE DIAMETER
OF	OUTSIDE FACE, OVERFLOW
OH	OVERHEAD
OL	OVERLOAD
OPER	OPERATING
OZ	OUNCE
PC	POINT OF CURVE
PCC	POINT OF COMPOUND CURVATURE
PCR	REVERSE OSMOSIS PERMRATE
PD	PLAN DIMENSION, SUMP PUMP DISCHARGE
PE	PLAIN END
PG	PRESSURE GAUGE
PI	POINT OF INTERSECTION
PL	PLATE
PLYWD	PLYWOOD
POLE	POLYMER
POLY	POLYMER
POW	PLANT OUTFALL WATER
PP	POWER POLE
PR	PAIR
PROJ	PROJECTION
PRS	PRESSURE REDUCING STATION
PRV	POWER ROOF VENTILATOR
PRW	PLANT RECYCLED WATER
PS	PIPE SUPPORT
PSF	POUNDS PER SQUARE FOOT
PSI	POUNDS PER SQUARE INCH
PSW	PLANT SERVICE WATER
PT	POINT, POINT OF TANGENCY
PVC	POLYVINYL CHLORIDE, POINT ON VERTICAL CURVE
PVCP	POLYVINYL CHLORIDE PIPE
PVMT	PAVEMENT
PW	POTABLE WATER
R	RADIUS, RISER
R / W	RIGHT OF WAY
RAS	RETURN ACTIVATED SLUDGE
RCW	RECLAIMED WATER
RECIRC	RECIRCULATING
RED	REDUCER, REDUCING
REINF	REINFORCING
REQD	REQUIRED
REV	REVERSED
RM	ROOM
RO	REVERSE OSMOSIS, ROUGH OPENING
ROC	REVERSE OSMOSIS CONCENTRATE
ROF	REVERSE OSMOSIS FEED
ROP	REVERSE OSMOSIS PERMEATE
RPM	REVOLUTIONS PER MINUTE
RS	RAW SLUDGE, RAW SEWAGE, ROLLED STEEL
RT	RIGHT

S	SOUTH, SPEAKER
SA	SULFURIC ACID
SAN	SANITARY SEWER
SCM	SCUM
SCR	SCREENINGS
SEC	SECOND
SECT	SECTION
SH	SHEET
SIM	SIMILAR
SP	SUMP PUMP
SPEC(S)	SPECIFICATION(S)
SQ	SQUARE
SS	SANITARY SEWER, STAINLESS STEEL
ST	STORM DRAIN
STD	STANDARD
STL	STEEL
STR	STRUCTURAL
SV	SHUTOFF VALVE
SYS	SYSTEM
T	THERMOSTAT, TREAD, TOTALIZER
T	TRANSFORMER, TOP
T&B	TOP AND BOTTOM
TEMP	TEMPERATURE, TEMPORARY
THK	THICK (NESS)
TI	TOTALIZING INDICATOR, TEMPERATURE INDICATOR
TP	TWISTED PAIR COUPLE, TOWEL PIN
TS	TEMPERATURE SWITCH
TW	TREATED WATER, TEMPERED OR BLENDED WATER
TYP	TYPICAL
UH	UNIT HEATER
UNO	UNLESS NOTED OTHERWISE
UV	ULTRAVIOLET
UVE	ULTRAVIOLET TREATMENT EFFLUENT
V	VALVE, VOLT, VENT
VAC	VACUUM
VBF	VALVE, AWWA BUTTERFLY
VBI	VALVE, INDUSTRIAL BUTTERFLY
VBL	VALVE, BALL
VBM	VALVE, BALL MISCELLANEOUS
VC	VERTICAL CURVE, VICTAULIC COUPLING
VERT	VERTICAL
W	WEST, WIDE, WINDOW, WATT, WATER
W/	WITH
W/O	WITHOUT
WAS	WASTE ACTIVATED SLUDGE
WB	WALLBOARD
WC	WATER CLOSET
WD	WOOD, WIDTH
WH	WALL HYDRANT
WL	WATER LEVEL
WM	WATER METER, WATTMETER
WS	WATERSTOP
WT	WEIGHT
WW	WETWELL
WWF	WELDED WIRE FABRIC
WWR	WASTEWATER-RAW
WWS	WASTEWATER-SCREENED
x	BY,TIMES
YH	YARD HYDRANT
#	NUMBER
%	PERCENT
&	AND
@	AT
<	DEFLECTION ANGLE

NO.	BY	CHK	APP
0	KEZ	RWF	EVB

REVISIONS AND RECORD OF USE

ISSUED FOR CONSTRUCTION — 5/19/2020 — DATE

REGISTERED PROFESSIONAL ENGINEER — ERICK V. BEVINGTON — No. C 78836 — CIVIL — STATE OF CALIFORNIA

5/20/2020

BLACK&VEATCH

JOINT VENTURE

FILANC

CITY OF MORRO BAY
MORRO BAY WATER
RECLAMATION FACILITY (WRF)

GENERAL
ABBREVIATIONS

DESIGNED: EVB, KEZ
DETAILED: MAK
CHECKED: EVB
APPROVED: EVB
DATE: 5/19/2020

0 1/2 1
IF THIS BAR DOES NOT MEASURE 1" THEN DRAWING IS NOT TO FULL SCALE

PROJECT NO.
400530

00-G-004
SHEET
4 OF 412

D400530
FD81203_PW

GENERAL LEGEND

- SURFACED STREET, ROAD OR DRIVE
- SURFACED STREET, ROAD OR DRIVE WITH CURBS
- NON-SURFACED STREET, ROAD OR DRIVE
- CONCRETE WALK
- CB — CATCH BASIN
- MANHOLE
- DRAINAGE COURSE OR FLOW LINE
- 326 — EXISTING GROUND CONTOUR
- 326 — FINISH GRADE CONTOUR
- BANK OR SLOPE LINES
- •#3 OR ⊕ T.H.#3 ⊕ B3 — TEST HOLE AND NUMBER
- SURVEY LINE WITH PI, PT, OR POT
- CONCRETE ENCASEMENT-PLAN
- CONCRETE REACTION BLOCKING AT BEND, PLUG OR TEE
- DRAINS OR CULVERTS
- TUNNEL CASING - PLAN
- SMALLER THAN 24" / 24" AND LARGER — EXISTING
- GENERAL LAYOUT YARD PIPING
- SMALLER THAN 24" / 24" AND LARGER — NEW
- NEW WATER LINE OR SEWER IN PROFILE
- NON-CONNECTING PIPING
- CE/L — CONSTRUCTION EASEMENT LINE
- E/L — EASEMENT LINE
- R/W — RIGHT-OF-WAY LINE
- P — PROPERTY LINE
- PE/L — PERMANENT EASEMENT LINE
- TE/L — TEMPORARY EASEMENT LINE
- UE/L — UTILITY EASEMENT LINE
- S/L — SURVEY LINE / SECTION LINE
- W — WATER LINE
- G — GAS LINE
- T — TELEPHONE (UNDERGROUND)
- E — ELECTRICAL (UNDERGROUND)
- P — T — POWER OR TELEPHONE LINES (OVERHEAD)
- (G) (W) — WATER OR GAS VALVE
- (WM) (GM) — WATER OR GAS METER
- TELEPHONE OR POWER POLE WITH GUY ANCHOR
- FIRE HYDRANT
- Y — YARD HYDRANT
- STREET LIGHT POLE
- TRAFFIC SIGNAL
- TRAFFIC SIGN
- S — STOPSIGN
- HEDGE, BRUSH, SHRUBS, WOODS
- 10" — DECIDUOUS TREE AND TRUNK DIAMETER
- 4" — CONIFEROUS TREE AND TRUNK DIAMETER
- SWAMP

- BUILDINGS, STRUCTURES
- STRUCTURES UNDERGROUND
- FUTURE BUILDINGS, STRUCTURES
- CLOTHES LINE
- SWING SET
- FENCE
- FENCE, WOOD
- RAILROAD, EACH TRACK
- CENTERLINE
- 1 / AC45 — SECTION NUMBER OR DETAIL LETTER; DRAWING NUMBER ON WHICH SECTION OR DETAIL APPEARS; OR WHERE SECTION IS CUT OR DETAIL IS NOTED
- DOOR, WINDOW AND LOUVER SCHEDULE REFERENCE
- 1 / A045 — WALL ELEVATION
- D — ABBREVIATION
- 4 — SCHEDULE NUMBER
- F102 — ROOM NUMBER; AREA DESIGNATION
- PV-10 — EQUIPMENT OR VALVE IDENTIFICATION CODE; EQUIPMENT NUMBER
- PV-10 — EQUIPMENT OR VALVE IDENTIFICATION CODE; EQUIPMENT NUMBER
- EQUIP / CALLOUT — EQUIPMENT REPRESENTATION WITH CALLOUT
- EXISTING FACILITY TO BE DEMOLISHED OR REMOVED

PIPING SYSTEMS

- NEW PIPING
- UNDERGROUND PIPING
- EXISTING PIPING
- FUTURE PIPING

MATERIALS LEGEND

- EARTH OR GRADE
- GRANULAR FILL (CRUSHED ROCK OR GRAVEL)
- ROCK
- NEW CONCRETE
- EXISTING CONCRETE, PRECAST OR PRESTRESSED CONCRETE
- BRICK, FACE
- BRICK, COMMON
- CONCRETE MASONRY UNITS (CMU)
- CUT STONE OR SAND FILL, GROUT, MORTAR, AND PLASTER
- WOOD, SHEATHING, PANELING, DECKING, ETC.
- WOOD, STUDS, BEAMS, JOISTS, ETC.
- RIPRAP
- CHECKERED PLATE
- STEEL (FOR 1"SCALE & LARGER)
- STEEL OR ALUMINUM (FOR 3/4" SCALE & SMALLER)
- BAR GRATING (LINES IN DIRECTION OF SPAN)
- ALUMINUM
- INSULATION (BATT)
- INSULATION (RIGID)

PIPING ACCESSORIES LEGEND

- BLIND FLANGE
- CAP OR PLUG
- CO — CLEANOUT
- CROSS
- DIAPHRAGM SEAL
- ELBOW
- ELBOW DOWN
- ELBOW TURNING UP
- SIZE — HOSE CONNECTION
- Q — QUICK COUPLING
- REDUCER
- RUPTURE DISK
- TEE
- TEE LINE DOWN
- TEE LINE UP
- WYE
- S — WYE STRAINER
- S — WYE STRAINER WITH BLOWOFF
- DRAIN OR BELL-UP
- CALIBRATING COLUMN
- TRAP
- UNION
- WALL SLEEVE
- AT — AUTOMATIC DRAIN TRAP
- DT — DRIP TRAP
- S / S — DUPLEX STRAINER
- EXPANSION COMPENSATOR
- F — INLINE FILTER
- FLEXIBLE HOSE OR TUBING
- FLEXIBLE CONNECTOR
- HOSE REEL
- INJECTOR, EDUCTOR, BLENDER
- ORIFICE PLATE
- PIPE GUIDE
- S — SEDIMENT TRAP
- S — STRAINER
- SUCTION DIFFUSER
- PIPE DIFFUSER
- SURGE CHAMBER
- VENT - SCREENED
- VENT
- P — PRESSURE GAUGE W/SNUBBER
- T — SIGHT FLOW INDICATOR
- T — TEMPERATURE INDICATOR
- THERMOMETER
- ELECTROMAGNETIC/ULTRASONIC FLOWMETER
- PITOT TUBE
- ROTAMETER
- TURBINE OR PROPELLOR FLOWMETER
- M — SET STOP METER
- VENTURI
- FM — FLOW METER

MISCELLANEOUS EQUIPMENT

- STATIC MIXER
- VERTICAL MIXER
- SIGHT GLASS
- CENTRIFUGE
- CHANNEL DIFFUSER
- COMPRESSOR OR BLOWER
- PIPE ANCHOR
- PUMP
- SLUICE GATE
- SLIDE GATE
- STOP PLATE
- BAR SCREEN
- EXPANSION TANK
- SCREW (LIFT) PUMP
- FLUME
- WEIR

VALVE LEGEND

- PINCH VALVE
- PLUG VALVE, ECCENTRIC
- PLUG VALVE, NON-ECCENTRIC
- BUTTERFLY VALVE
- GATE VALVE
- BALL VALVE
- GLOBE VALVE
- CHECK VALVE
- 3 WAY VALVE
- 4 WAY VALVE
- ANGLE VALVE
- CHLORINE INSTITUTE VALVE
- DIAPHRAGM VALVE
- THROTTLING VALVE
- FLAME ARRESTER OR CHECK
- BACKWATER VALVE
- INLINE PRESSURE RELIEF VALVE
- PRESSURE REGULATING VALVE
- PRESSURE SUSTAINING OR MAINTAINING VALVE
- VACUUM BREAKER
- THERMAL SHUTOFF VALVE
- EXPLOSION RELIEF VALVE
- HOSE FAUCET
- HOSE FAUCET W/VACUUM BREAKER
- HOSE VALVE W/HOSE NIPPLE
- BACKFLOW PREVENTER
- SAFETY RELIEF VALVE
- V — VACUUM RELIEF CHECK VALVE
- PRESSURE VACUUM RELIEF VALVE

ACTUATOR LEGEND

- E — ELECTRIC
- FLOAT
- DIAPHRAGM
- P/O — AIR/OIL TANDEM
- S — SOLENOID
- A — AIR

NOTE :
SYMBOLS ON THIS SHEET WHICH ARE TO BE SHOWN AS EXISTING SHALL BE DELINEATED AS SCREENED
THOSE SYMBOLS WHICH ARE TO BE SHOWN AS NEW SHALL BE DELINEATED AS SOLID (HEAVY)

NO.	BY	CHK	APP	DATE	REVISIONS AND RECORD OF USE
0	KEZ	RWF	EVB	5/19/2020	ISSUED FOR CONSTRUCTION

REGISTERED PROFESSIONAL ENGINEER — ERICK V. BEVINGTON — No. C 78836 — CIVIL — STATE OF CALIFORNIA
5/20/2020

BLACK & VEATCH JOINT VENTURE — BLACK & VEATCH — FILANC

CITY OF MORRO BAY
MORRO BAY WATER RECLAMATION FACILITY (WRF)

GENERAL LEGEND

DESIGNED: EVB, KEZ
DETAILED: MAK
CHECKED: EVB
APPROVED: EVB
DATE: 5/19/2020

0 1/2 1
IF THIS BAR DOES NOT MEASURE 1" THEN DRAWING IS NOT TO FULL SCALE

PROJECT NO.
400530

00-G-005
SHEET
5 OF 412

D400530
FI081202_PW

PACKAGED COARSE SCREENS & VORTEX GRIT

16" FM2

12" FM1

DUMPSTER

DUMPSTER

S A F E BOX

FINE SCREENS

DUMPSTER

INFLUENT SPLITTER

DEOX

ANOXIC ZONES

AERATION ZONES

SCUM

BNR AERATION BLOWERS

MBR FEED/RAS PUMPS

MBR SCOUR BLOWERS

MBR CASSETTES

MBR FILTRATE PUMPS

RAS

SCUM/WAS WETWELL

WAS PUMPS

RO FEED TANKS

RECYCLED WATER PUMP STATION

AIR-DIAPHRAGM EQ TANK

TO ONSITE RECYCLED WATER SYSTEM

TO OCEAN OUTFALL

OUTFALL DISINFECTION CONTACT PIPELINE

RO CONCENTRATE DISINFECTION CONTACT PIPELINE

VACTOR TRUCK WASHDOWN AREA

PLANT SEWER

S A F E SETTLE

MBR FILTRATE TO OUTFALL

S A F E FILTER

OUTFALL BALANCING TANK

OUTFALL PUMP STATION

TO S A F E SYSTEM

BACKWASH AND SOLIDS FROM S.A.F.E SYSTEM

WAS TO SLUDGE HOLDING TANKS

MBR FILTRATE TO RO SYSTEM

RO FEED BYPASS TO OCEAN OUTFALL

RO PERMEATE BYPASS TO OCEAN OUTFALL

RO CONCENTRATE TO OCEAN OUTFALL

UV EFFLUENT BYPASS

RO FEED BYPASS

BYPASS

PERMEATE

CONCENTRATE

FEED PUMP

CARTRIDGE FILTER

STAGE 1 MEMBRANES

BOOSTER PUMP

STAGE 2 MEMBRANES

REVERSE OSMOSIS SYSTEM

ULTRAVIOLET DISINFECTION/AOP SYSTEM

CALCITE REMINERALIZATION SYSTEM

TANK BYPASS

IPR PRODUCT WATER STORAGE TANK

IPR PRODUCT WATER PUMP STATION

TO IPR USES

NORTH PROCESS AREA STORM BASIN

STORM BASIN OUTLET CONTROL AND PUMP STATION

SLUDGE HOLDING TANKS

SLUDGE AERATION BLOWERS

SLUDGE PUMPS

BELT FILTER PRESS

SLUDGE CAKE

ROLL-OFF CONTAINER

LEGEND

- PUMP
- M FLOW METER
- PRESSURE SENSOR
- LEVEL SENSOR
- KEY VALVE
- MIXER
- A ACID (CITRIC)
- B BASE (SODIUM HYDROXIDE)
- C CHLORINE (SODIUM HYPOCHLORITE)
- D DECHLOR (SODIUM BISULFITE)
- L LAS (LIQUID AMMONIUM SULFATE)
- M MINERALIZATION (CALCITE)
- P POLYMER
- T THRESHOLD INHIBITOR / ANTISCALANT
- S ACID (SULFURIC)

NO.	BY	CHK	APP
0	KEZ	RWF	EVB

REVISIONS AND RECORD OF USE

ISSUED FOR CONSTRUCTION — 5/19/2020

REGISTERED PROFESSIONAL ENGINEER — ERICK V. BEVINGTON — No. C 78836 — CIVIL — STATE OF CALIFORNIA — 5/20/2020

BLACK & VEATCH

JOINT VENTURE

BLACK & VEATCH

FILANC

CITY OF MORRO BAY
MORRO BAY WATER RECLAMATION FACILITY (WRF)

GENERAL PROCESS SCHEMATIC

DESIGNED: EVB, KEZ
DETAILED: MAK
CHECKED: EVB
APPROVED: EVB
DATE: 5/19/2020

0 1/2 1

IF THIS BAR DOES NOT MEASURE 1" THEN DRAWING IS NOT TO FULL SCALE

PROJECT NO. 400530

00-G-006

SHEET 6 OF 412

D400530
FD81203_PW

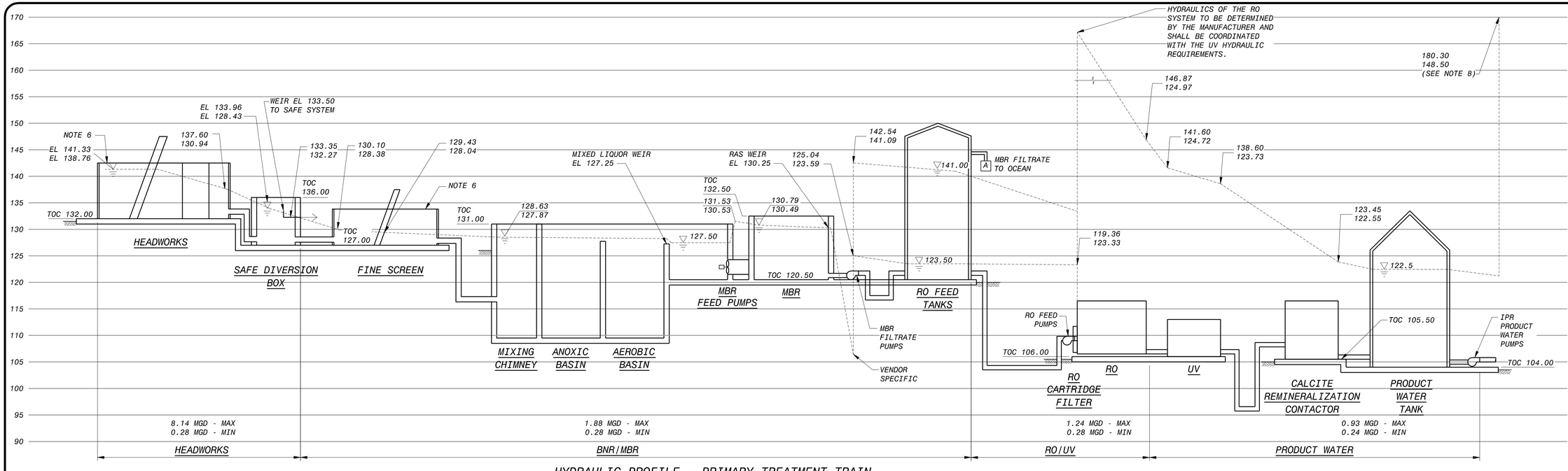

HYDRAULIC PROFILE - PRIMARY TREATMENT TRAIN

VERT SCALE: 1" = 10'-0"

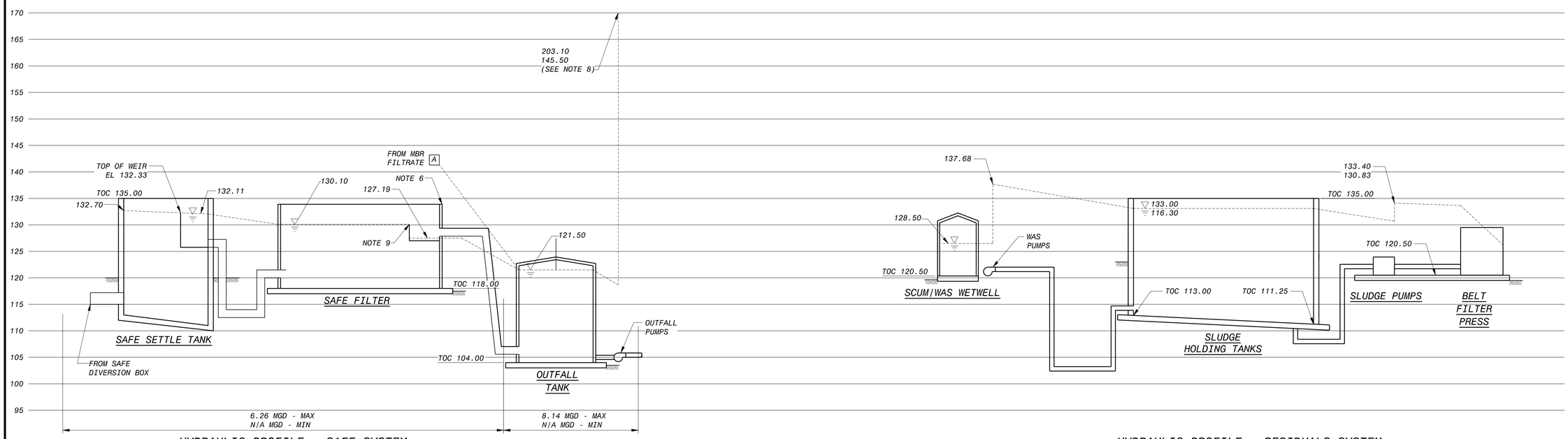

HYDRAULIC PROFILE - SAFE SYSTEM

VERT SCALE: 1" = 10'-0"

HYDRAULIC PROFILE - RESIDUALS SYSTEM

VERT SCALE: 1" = 10'-0"

NOTES:

1. PEAK HOUR FLOW UP TO THE SPLITTER BOX 8.14 MGD.
2. PEAK HOUR FLOW BETWEEN SPLITTER BOX AND MBR IS 1.88 MGD.
3. PEAK HOUR FLOW DOWNSTREAM OF MBR IS 1.16 MGD.
4. THE MINIMUM DIURNAL FLOW MODELED IS 0.25 MGD. THIS OCCURS THROUGHOUT THE LIQUID STREAM OF THE PLANT.
5. THE TOP NUMBER ON THE HYDRAULIC PROFILE IS THE MAXIMUM HGL. THE LOWER NUMBER ON THE HYDRAULIC PROFILE IS THE MINIMUM HGL.
6. STAINLESS STEEL TANK FURNISHED WITH EQUIPMENT PACKAGE. TOP OF TANK EL IS VENDOR SPECIFIC WITH AT LEAST 2' OF FREEBOARD.
7. NOTE FINISHED GRADE ELEVATIONS SHOWN THAT ARE ADJACENT TO TANKS AND CONCRETE SLABS ARE APPROXIMATE. SEE CIVIL GRADING AND PAVING DRAWINGS FOR EXACT FINISHED GRADE ELEVATIONS.
8. PUMP DISCHARGE HYDRAULIC GRADE LINES ARE APPROXIMATE. SEE PUMP SPECIFICATIONS FOR DETAILS.
9. THE FILTER EFFLUENT WEIR SHALL BE SET SUCH THAT IT IS HIGHER THAN THE DOWNSTREAM HGL SHOWN AND SUCH THAT THE FILTER INFLUENT HGL IS NO HIGHER THAN THE INFLUENT HGL ELEVATION SHOWN.

NO.	BY	CHK	APP	DATE	REVISIONS AND RECORD OF USE
0	KEZ	RWF	EVB	5/19/2020	ISSUED FOR CONSTRUCTION

REGISTERED PROFESSIONAL ENGINEER
ERICK V. BEVINGTON
No. C 78836
CIVIL
STATE OF CALIFORNIA
5/20/2020

BLACK & VEATCH
JOINT VENTURE
BLACK & VEATCH
FILANC

CITY OF MORRO BAY
MORRO BAY WATER
RECLAMATION FACILITY (WRF)

GENERAL
HYDRAULIC PROFILES

DESIGNED: EVB, KEZ
DETAILED: MAK
CHECKED: EVB
APPROVED: EVB
DATE: 5/19/2020

0 1/2 1
IF THIS BAR DOES NOT MEASURE 1" THEN DRAWING IS NOT TO FULL SCALE

PROJECT NO.
400530

00-G-007
SHEET
7 OF 412

D400530
FD81202_PW

STRUCTURE, BUILDING OR AREA Name	Room No.	Table 307.1(1) or 2003	Classification(s)	HAZARDOUS MATERIALS Section 307 Quantity	Unit	Control Area Designation	BUILDING CODE Occupancy Group(s)	Occupancy Load	Area per Occupant	Type of Construction	Fire Rating of Building Elements (hours) Structural Frame	Bearing Walls	Nonbearing Walls and Partitions	Floors	Roofs	Separation of Occupancies (hours)	Mixed Occupancies	Building Height	Stories	Sprinkler System	FIRE PROTECTION Separation Required	Separation Type	Separation Rating	Smoke Detection System	Ventilation Natural	Mechanical	Exhaust	Smoke Control System	FIRE CODE REQUIREMENTS Section 914 Building Feature	Section 914 Building Feature	ELECTRICAL CODE Class	Group	Division	REMARKS
EXISTING BUILDINGS																																		
Operations Building																																		
Manager's Office	101						B	A-3	1	150	V-B						Yes	2	A	1	Sprinkler	1 hr	Wall	Yes	Mech	Yes	Yes	Yes						
Office 2	102						B	A-3	1	150	V-B						Yes		A	1					Mech	Yes	Yes	Yes						
Office 3	103						B	A-3	1	150	V-B						Yes		A	1					Mech	Yes	Yes	Yes						
Office 4	104						B	A-3	1	150	V-B						Yes		A	1					Mech	Yes	Yes	Yes						
Office 5	105						B	A-3	1	150	V-B						Yes		A	1					Mech	Yes	Yes	Yes						
Office 6	106	---	---	---	---	---	B	A-3	1	150	V-B						Yes		A	1					Mech	Yes	Yes	Yes				---	---	---
Office 7	107						B	A-3	1	150	V-B						Yes		A	1					Mech	Yes	Yes	Yes						
Copy/Storage	108						B	A-3	1	150	V-B						Yes		A	1					Mech	Yes	Yes	Yes						
Mail Room	109						B	A-3	1	150	V-B						Yes		A	1					Mech	Yes	Yes	Yes						
Night Room	110						B	A-3	1	150	V-B						Yes		A	1					Mech	Yes	Yes	Yes						
Lab	111						B	A-3	1	150	V-B						Yes		A	1					Mech	Yes	Yes	Yes						
Conference Room	112						B	A-3	1	150	V-B						Yes		A	1					Mech	Yes	Yes	Yes						
Office 8	113	---	---	---	---	---	B	A-3	1	150	V-B						Yes		A	1					Mech	Yes	Yes	Yes				---	---	---
Lunch Area	114						B	A-3	1	150	V-B						Yes		A	1					Mech	Yes	Yes	Yes						
Server Room	115						B	A-3	1	150	V-B						Yes		A	1					Mech	Yes	Yes	Yes						
Electrical Room	116						B	A-3	1	150	V-B						Yes		A	1					Mech	Yes	Yes	Yes						
Public Lobby/Storage Room	117						B	A-3	1	150	V-B						Yes		A	1					Mech	Yes	Yes	Yes						
Office Room	118						B	A-3	1	150	V-B						Yes		A	1					Mech	Yes	Yes	Yes						
Men's Locker Room/Toilet	119						B	A-3	1	150	V-B						Yes		A	1					Mech	Yes	Yes	Yes						
Women's Locker Room/Toilet	120	---	---	---	---	---	B	A-3	1	150	V-B						Yes		A	1					Mech	Yes	Yes	Yes				---	---	---
Office/Reception	121						B	A-3	1	150	V-B						Yes		A	1					Mech	Yes	Yes	Yes						
Public Mechanical Room	122						B	A-3	1	150	V-B						Yes		A	1					Mech	Yes	Yes	Yes						
Server Room	123						B	A-3	1	150	V-B						Yes		A	1					Mech	Yes	Yes	Yes						
Storage Room	124						B	A-3	1	150	V-B						Yes		A	1					Mech	Yes	Yes	Yes						
Storage Room	125						B	A-3	1	150	V-B						Yes		A	1					Mech	Yes	Yes	Yes						
Lab	126						B	A-3	1	150	V-B						Yes		A	1					Mech	Yes	Yes	Yes						
Hall	127						B	A-3	1	150	V-B						Yes		A	1					Mech	Yes	Yes	Yes						
Lab	128						B	A-3	1	150	V-B						Yes		A	1					Mech	Yes	Yes	Yes						
Hall	129						B	A-3	1	150	V-B						Yes		A	1					Mech	Yes	Yes	Yes						
Lab	130						B	A-3	1	150	V-B						Yes		A	1					Mech	Yes	Yes	Yes						
Hall	131						B	A-3	1	150	V-B						Yes		A	1					Mech	Yes	Yes	Yes						
Hall	132						B	A-3	1	150	V-B						Yes		A	1					Mech	Yes	Yes	Yes						
Hall	133						B	A-3	1	150	V-B						Yes		A	1					Mech	Yes	Yes	Yes						
Hall	134						B	A-3	1	150	V-B						Yes		A	1					Mech	Yes	Yes	Yes						
Hall	135						B	A-3	1	150	V-B						Yes		A	1					Mech	Yes	Yes	Yes						
Hall	136						B	A-3	1	150	V-B						Yes		A	1					Mech	Yes	Yes	Yes						
Hall	137						B	A-3	1	150	V-B						Yes		A	1					Mech	Yes	Yes	Yes						
Hall	138						B	A-3	1	150	V-B						Yes		A	1					Mech	Yes	Yes	Yes						
Hall	139						B	A-3	1	150	V-B						Yes		A	1					Mech	Yes	Yes	Yes						
Hall	140						B	A-3	1	150	V-B						Yes		A	1					Mech	Yes	Yes	Yes						
Hall	141						B	A-3	1	150	V-B						Yes		A	1					Mech	Yes	Yes	Yes						
Hall	142						B	A-3	1	150	V-B						Yes		A	1					Mech	Yes	Yes	Yes						
Hall	143						B	A-3	1	150	V-B						Yes		A	1					Mech	Yes	Yes	Yes						
Hall	144						B	A-3	1	150	V-B						Yes		A	1					Mech	Yes	Yes	Yes						
Hall	145						B	A-3	1	150	V-B						Yes		A	1					Mech	Yes	Yes	Yes						
Hall	146						B	A-3	1	150	V-B						Yes		A	1					Mech	Yes	Yes	Yes						
Hall	147						B	A-3	1	150	V-B						Yes		A	1					Mech	Yes	Yes	Yes						
Hall	148						B	A-3	1	150	V-B						Yes		A	1					Mech	Yes	Yes	Yes						
Hall	149						B	A-3	1	150	V-B						Yes		A	1					Mech	Yes	Yes	Yes						
Hall	150						B	A-3	1	150	V-B						Yes		A	1					Mech	Yes	Yes	Yes						
Hall	151						B	A-3	1	150	V-B						Yes		A	1					Mech	Yes	Yes	Yes						
Hall	152						B	A-3	1	150	V-B						Yes		A	1					Mech	Yes	Yes	Yes						
Hall	153						B	A-3	1	150	V-B						Yes		A	1					Mech	Yes	Yes	Yes						
Hall	154						B	A-3	1	150	V-B						Yes		A	1					Mech	Yes	Yes	Yes						
Hall	155						B	A-3	1	150	V-B						Yes		A	1					Mech	Yes	Yes	Yes						
Hall	156						B	A-3	1	150	V-B						Yes		A	1					Mech	Yes	Yes	Yes						
Hall	157						B	A-3	1	150	V-B						Yes		A	1					Mech	Yes	Yes	Yes						
Hall	158						B	A-3	1	150	V-B						Yes		A	1					Mech	Yes	Yes	Yes						
Hall	159						B	A-3	1	150	V-B						Yes		A	1					Mech	Yes	Yes	Yes						
Hall	160						B	A-3	1	150	V-B						Yes		A	1					Mech	Yes	Yes	Yes						
Hall	161						B	A-3	1	150	V-B						Yes		A	1					Mech	Yes	Yes	Yes						
Hall	162						B	A-3	1	150	V-B						Yes		A	1					Mech	Yes	Yes	Yes						
Hall	163						B	A-3	1	150	V-B						Yes		A	1					Mech	Yes	Yes	Yes						
Hall	164						B	A-3	1	150	V-B						Yes		A	1					Mech	Yes	Yes	Yes						
Hall	165						B	A-3	1	150	V-B						Yes		A	1					Mech	Yes	Yes	Yes						
Hall	166						B	A-3	1	150	V-B						Yes		A	1					Mech	Yes	Yes	Yes						
Hall	167						B	A-3	1	150	V-B						Yes		A	1					Mech	Yes	Yes	Yes						
Hall	168						B	A-3	1	150	V-B						Yes		A	1					Mech	Yes	Yes	Yes						
Hall	169						B	A-3	1	150	V-B						Yes		A	1					Mech	Yes	Yes	Yes						
Hall	170						B	A-3	1	150	V-B						Yes		A	1					Mech	Yes	Yes	Yes						
Hall	171						B	A-3	1	150	V-B						Yes		A	1					Mech	Yes	Yes	Yes						
Hall	172						B	A-3	1	150	V-B						Yes		A	1					Mech	Yes	Yes	Yes						
Hall	173						B	A-3	1	150	V-B						Yes		A	1					Mech	Yes	Yes	Yes						
Hall	174						B	A-3	1	150	V-B						Yes		A	1					Mech	Yes	Yes	Yes						
Hall	175						B	A-3	1	150	V-B						Yes		A	1					Mech	Yes	Yes	Yes						
Hall	176						B	A-3	1	150	V-B						Yes		A	1					Mech	Yes	Yes	Yes						
Hall	177						B	A-3	1	150	V-B						Yes		A	1					Mech	Yes	Yes	Yes						
Hall	178						B	A-3	1	150	V-B						Yes		A	1					Mech	Yes	Yes	Yes						
Hall	179						B	A-3	1	150	V-B						Yes		A	1					Mech	Yes	Yes	Yes						
Hall	180						B	A-3	1	150	V-B						Yes		A	1					Mech	Yes	Yes	Yes						
Hall	181						B	A-3	1	150	V-B						Yes		A	1					Mech	Yes	Yes	Yes						
Hall	182						B	A-3	1	150	V-B						Yes		A	1					Mech	Yes	Yes	Yes						
Hall	183						B	A-3	1	150	V-B						Yes		A	1					Mech	Yes	Yes	Yes						
Hall	184						B	A-3	1	150	V-B						Yes		A	1					Mech	Yes	Yes	Yes						
Hall	185						B	A-3	1	150	V-B						Yes		A	1					Mech	Yes	Yes	Yes						
Hall	186						B	A-3	1	150	V-B						Yes		A	1					Mech	Yes	Yes	Yes						
Hall	187						B	A-3	1	150	V-B						Yes		A	1					Mech	Yes	Yes	Yes						
Hall	188						B	A-3	1	150	V-B						Yes		A	1					Mech	Yes	Yes	Yes						
Hall	189						B	A-3	1	150	V-B						Yes		A	1					Mech	Yes	Yes	Yes						
Hall	190						B	A-3	1	150	V-B						Yes		A	1					Mech	Yes	Yes	Yes						
Hall	191						B	A-3	1	150	V-B						Yes		A	1					Mech	Yes	Yes	Yes						
Hall	192						B	A-3	1	150	V-B						Yes		A	1					Mech	Yes	Yes	Yes						
Hall	193						B	A-3	1	150	V-B						Yes		A	1					Mech	Yes	Yes	Yes						
Hall	194						B	A-3	1	150	V-B						Yes		A	1					Mech	Yes	Yes	Yes						
Hall	195						B	A-3	1	150	V-B						Yes		A	1					Mech	Yes	Yes	Yes						
Hall	196						B	A-3	1	150	V-B						Yes		A	1					Mech	Yes	Yes	Yes						
Hall	197						B	A-3	1	150	V-B						Yes		A	1					Mech	Yes	Yes	Yes						
Hall	198						B	A-3	1	150	V-B						Yes		A	1					Mech	Yes	Yes	Yes						
Hall	199						B	A-3	1	150	V-B						Yes		A	1					Mech	Yes	Yes	Yes						
Hall	200						B	A-3	1	150	V-B						Yes		A	1					Mech	Yes	Yes	Yes						
Hall	201						B	A-3	1	150	V-B						Yes		A	1					Mech	Yes	Yes	Yes						
Hall	202						B	A-3	1	150	V-B						Yes		A	1					Mech	Yes	Yes	Yes						
Hall	203						B	A-3	1	150	V-B						Yes		A	1					Mech	Yes	Yes	Yes						
Hall	204						B	A-3	1	150	V-B						Yes		A	1					Mech	Yes	Yes	Yes						
Hall	205						B	A-3	1	150	V-B						Yes		A	1					Mech	Yes	Yes	Yes						
Hall	206						B	A-3	1	150	V-B						Yes		A	1					Mech	Yes	Yes	Yes						
Hall	207						B	A-3	1	150	V-B						Yes		A	1					Mech	Yes	Yes	Yes						
Hall	208						B	A-3	1	150	V-B						Yes		A	1					Mech	Yes	Yes	Yes						
Hall	209						B	A-3	1	150	V-B						Yes		A	1					Mech	Yes	Yes	Yes						
Hall	210						B	A-3	1	150	V-B						Yes		A	1					Mech	Yes	Yes	Yes						
Hall	211						B	A-3	1	150	V-B						Yes		A	1					Mech	Yes	Yes	Yes						
Hall	212						B	A-3	1	150	V-B						Yes		A	1					Mech	Yes	Yes	Yes						
Hall	213						B	A-3	1	150	V-B						Yes		A	1					Mech	Yes	Yes	Yes						
Hall	214						B	A-3	1	150	V-B						Yes		A	1					Mech	Yes	Yes	Yes						
Hall	215						B	A-3	1	150	V-B						Yes		A	1					Mech	Yes	Yes	Yes						
Hall	216						B	A-3	1	150	V-B						Yes		A	1					Mech	Yes	Yes	Yes						
Hall	217						B	A-3	1	150	V-B						Yes		A	1					Mech	Yes	Yes	Yes						
Hall	218						B	A-3	1	150	V-B						Yes		A	1					Mech	Yes	Yes	Yes						
Hall	219						B	A-3	1	150	V-B						Yes		A	1					Mech	Yes	Yes	Yes						
Hall	220						B	A-3	1	150	V-B						Yes		A	1					Mech	Yes	Yes	Yes						
Hall	221						B	A-3	1	150	V-B						Yes		A	1					Mech	Yes	Yes	Yes						
Hall	222						B	A-3	1	150	V-B						Yes		A	1					Mech	Yes	Yes	Yes						
Hall	223						B	A-3	1	150	V-B						Yes		A	1					Mech	Yes	Yes	Yes						
Hall	224						B	A-3	1	150	V-B						Yes		A	1					Mech	Yes	Yes	Yes						
Hall	225						B	A-3	1	150	V-B						Yes		A	1					Mech	Yes	Yes	Yes						
Hall	226						B	A-3	1	150	V-B						Yes		A	1					Mech	Yes	Yes	Yes						
Hall	227						B	A-3	1	150	V-B						Yes		A	1					Mech	Yes	Yes	Yes						
Hall	228						B	A-3	1	150	V-B						Yes		A	1					Mech	Yes	Yes	Yes						
Hall	229						B	A-3	1	150	V-B						Yes		A	1					Mech	Yes	Yes	Yes						
Hall	230						B	A-3	1	150	V-B						Yes		A	1					Mech	Yes	Yes	Yes						
Hall	231						B	A-3	1	150	V-B						Yes		A	1					Mech	Yes	Yes	Yes						
Hall	232						B	A-3	1	150	V-B						Yes		A	1					Mech	Yes	Yes	Yes						
Hall	233						B	A-3	1	150	V-B						Yes		A	1					Mech	Yes	Yes	Yes						
Hall	234						B	A-3	1	150	V-B						Yes		A	1					Mech	Yes	Yes	Yes						
Hall	235						B	A-3	1	150	V-B						Yes		A	1					Mech	Yes	Yes	Yes						
Hall	236						B	A-3	1	150	V-B						Yes		A	1					Mech	Yes	Yes	Yes						
Hall	237						B	A-3	1	150	V-B						Yes		A	1					Mech	Yes	Yes	Yes						
Hall	238						B	A-3	1	150	V-B						Yes		A	1					Mech	Yes	Yes	Yes						
Hall	239						B	A-3	1	150	V-B						Yes		A	1					Mech	Yes	Yes	Yes						
Hall	240						B	A-3	1	150	V-B						Yes		A	1					Mech	Yes	Yes	Yes						
Hall	241						B	A-3	1	150	V-B						Yes		A	1					Mech	Yes	Yes	Yes						
Hall	242						B	A-3	1	150	V-B						Yes		A	1					Mech	Yes	Yes	Yes						
Hall	243						B	A-3	1	150	V-B						Yes		A	1					Mech	Yes	Yes	Yes						
Hall	244						B	A-3	1	150	V-B						Yes		A	1					Mech	Yes	Yes	Yes						
Hall	245						B	A-3	1	150	V-B						Yes		A	1					Mech	Yes	Yes	Yes						
Hall	246						B	A-3	1	150	V-B						Yes		A	1					Mech	Yes	Yes	Yes						
Hall	247						B	A-3	1	150	V-B						Yes		A	1					Mech	Yes	Yes	Yes						
Hall	248						B	A-3	1	150	V-B						Yes		A	1					Mech	Yes	Yes	Yes						
Hall	249						B	A-3	1	150	V-B						Yes		A	1					Mech	Yes	Yes	Yes						
Hall	250						B	A-3	1	150	V-B						Yes		A	1					Mech	Yes	Yes	Yes						
Hall	251						B	A-3	1	150	V-B						Yes		A	1					Mech	Yes	Yes	Yes						
Hall	252						B	A-3	1	150	V-B						Yes		A	1					Mech	Yes	Yes	Yes						
Hall	253						B	A-3	1	150	V-B						Yes		A	1					Mech	Yes	Yes	Yes						
Hall	254						B	A-3	1	150	V-B						Yes		A	1					Mech	Yes	Yes	Yes						
Hall	255						B	A-3	1	150	V-B						Yes		A	1					Mech	Yes	Yes	Yes						
Hall	256						B	A-3	1	150	V-B						Yes		A	1					Mech	Yes	Yes	Yes						
Hall	257						B	A-3	1	150	V-B						Yes		A	1					Mech	Yes	Yes	Yes						
Hall	258						B	A-3	1	150	V-B						Yes		A	1					Mech	Yes	Yes	Yes						
Hall	259						B	A-3	1	150	V-B						Yes		A	1					Mech	Yes	Yes	Yes						
Hall	260						B	A-3	1	150	V-B						Yes		A	1					Mech	Yes	Yes	Yes						
Hall	261						B	A-3	1	150	V-B						Yes		A	1					Mech	Yes	Yes	Yes						
Hall	262						B	A-3	1	150	V-B						Yes		A	1					Mech	Yes	Yes	Yes						
Hall	263						B	A-3	1	150	V-B						Yes		A	1					Mech	Yes	Yes	Yes						
Hall	264						B	A-3	1	150	V-B						Yes		A	1					Mech	Yes	Yes	Yes						
Hall	265						B	A-3	1	150	V-B						Yes		A	1					Mech	Yes	Yes	Yes						
Hall	266						B	A-3	1	150	V-B						Yes		A	1					Mech	Yes	Yes	Yes						
Hall	267						B	A-3	1	150	V-B						Yes		A	1					Mech	Yes	Yes	Yes						
Hall	268						B	A-3	1	150	V-B						Yes		A	1					Mech	Yes	Yes	Yes						
Hall	269						B	A-3	1	150	V-B						Yes		A	1					Mech	Yes	Yes	Yes						
Hall	270						B	A-3	1	150	V-B						Yes		A	1					Mech	Yes	Yes	Yes						
Hall	271						B	A-3	1	150	V-B						Yes		A	1					Mech	Yes	Yes	Yes						
Hall	272						B	A-3	1	150	V-B						Yes		A	1					Mech	Yes	Yes	Yes						
Hall	273						B	A-3	1	150	V-B						Yes		A	1					Mech	Yes	Yes	Yes						
Hall	274						B	A-3	1	150	V-B						Yes		A	1					Mech	Yes	Yes	Yes						
Hall	275						B	A-3	1	150	V-B						Yes		A	1					Mech	Yes	Yes	Yes						
Hall	276						B	A-3	1	150	V-B						Yes		A	1					Mech	Yes	Yes	Yes						
Hall	277						B	A-3	1	150	V-B						Yes		A	1					Mech	Yes	Yes	Yes						
Hall	278						B	A-3	1	150	V-B						Yes		A	1					Mech	Yes	Yes	Yes						
Hall	279						B	A-3	1	150	V-B						Yes		A	1					Mech	Yes	Yes	Yes						
Hall	280						B	A-3	1	150	V-B						Yes		A	1					Mech	Yes	Yes	Yes						
Hall	281						B	A-3	1	150	V-B						Yes		A	1					Mech	Yes	Yes	Yes						
Hall	282						B	A-3	1	150	V-B						Yes		A	1					Mech	Yes	Yes	Yes						
Hall	283						B	A-3	1	150	V-B						Yes		A	1					Mech	Yes	Yes	Yes						
Hall	284						B	A-3	1	150	V-B						Yes		A	1					Mech	Yes	Yes	Yes						
Hall	285						B	A-3	1	150	V-B						Yes		A	1					Mech	Yes	Yes	Yes						
Hall	286						B	A-3	1	150	V-B						Yes		A	1					Mech	Yes	Yes	Yes						
Hall	287						B	A-3	1	150	V-B						Yes		A	1					Mech	Yes	Yes	Yes						
Hall	288						B	A-3	1	150	V-B						Yes		A	1					Mech	Yes	Yes	Yes						
Hall	289						B	A-3	1	150	V-B						Yes		A	1					Mech	Yes	Yes	Yes						
Hall	290						B	A-3	1	150	V-B						Yes		A	1					Mech	Yes	Yes	Yes						
Hall	291						B	A-3	1	150	V-B						Yes		A	1					Mech	Yes	Yes	Yes						
Hall	292						B	A-3	1	150	V-B						Yes		A	1					Mech	Yes	Yes	Yes						
Hall	293						B	A-3	1	150	V-B						Yes		A	1					Mech	Yes	Yes	Yes						
Hall	294						B	A-3	1	150	V-B						Yes		A	1					Mech	Yes	Yes	Yes						
Hall	295						B	A-3	1	150	V-B						Yes		A	1					Mech	Yes	Yes	Yes						
Hall	296						B	A-3	1	150	V-B						Yes		A	1					Mech	Yes	Yes	Yes						
Hall	297						B	A-3	1	150	V-B						Yes		A	1					Mech	Yes	Yes	Yes						
Hall	298						B	A-3	1	150	V-B						Yes		A	1					Mech	Yes	Yes	Yes						
Hall	299						B	A-3	1	150	V-B						Yes		A	1					Mech	Yes	Yes	Yes						
Hall	300						B	A-3	1	150	V-B						Yes		A	1					Mech	Yes	Yes	Yes						
Hall	301						B	A-3	1	150	V-B						Yes		A	1					Mech	Yes	Yes	Yes						
Hall	302						B	A-3	1	150	V-B						Yes		A	1					Mech	Yes

GENERAL NOTES

1. HORIZONTAL CONTROL: COORDINATES ARE BASED ON STATE PLANE COORDINATE SYSTEM (NAD83) CALIFORNIA ZONE V, US FOOT. COORDINATES ON STRUCTURES DEPICT THE EXTERIOR FACE OF THE CONCRETE SUBSTRUCTURE FOUNDATION WALL OR FOOTING WALL.

2. VERTICAL CONTROL: ELEVATIONS ARE BASED ON THE PROJECT BENCHMARK: NGS PID FV1098: BRASS CAP STAMPED "J 693 RESET 1968" SET IN CONCRETE, ELEVATION = 151.79.

3. EXISTING UTILITIES AND STRUCTURES (UNDERGROUND, SURFACE, OR OVERHEAD) ARE INDICATED ONLY TO THE EXTENT THAT SUCH INFORMATION WAS KNOWN, OR MADE AVAILABLE TO, OR DISCOVERED BY THE ENGINEER IN PREPARING THE DRAWINGS. THE LOCATIONS, CONFIGURATIONS, AND ELEVATIONS OF SUBSURFACE FACILITIES AND UTILITIES ARE APPROXIMATE, AND NOT ALL UTILITIES AND FACILITIES MAY BE INDICATED. OVERHEAD UTILITIES ARE NOT INDICATED IN ARCHITECTURAL ELEVATIONS, PROFILE OR SECTION DRAWINGS.

4. "SCREENED" (LIGHT) DELINEATION INDICATED ON THE DRAWINGS DENOTES EXISTING FACILITIES. "SCREENED" INFORMATION WAS TAKEN FROM EXISTING CONSTRUCTION DRAWINGS AND DATA, IS FOR REFERENCE ONLY, AND SHALL BE FIELD VERIFIED BY THE CONTRACTOR PRIOR TO THE ORDERING OF MATERIALS AND BEGINNING OF CONSTRUCTION. "BOLD" DELINEATION IS NEW WORK TO BE CONSTRUCTED UNDER THIS CONTRACT.

5. CALL BEFORE YOU DIG. VERIFY PRECISE LOCATIONS AND ELEVATIONS OF ALL UTILITIES AND STRUCTURES, WHETHER INDICATED ON THE DRAWINGS OR NOT, IN THE FIELD IN ADVANCE OF EXCAVATING, BY CONTACTING ALL UTILITIES AND OTHER AGENCIES, AND BY PROSPECTING. CONTRACTOR SHALL BE RESPONSIBLE FOR REMOVAL, DEMOLITION, RECONSTRUCTION, AND RECONNECTION OF EXISTING FACILITIES AS REQUIRED TO COMPLETE THE WORK. IF REQUIRED AFTER FIELD VERIFICATION, COORDINATE WITH THE ENGINEER TO DETERMINE ANY NECESSARY MODIFICATIONS TO PROPOSED NEW WORK.

6. BEFORE CONSTRUCTION IS STARTED, COORDINATE WITH THE OWNER OF EACH UTILITY AND DEFINE THE REQUIREMENTS AND METHODS TO ACCOMMODATE THE PROTECTION, TEMPORARY SUPPORT, ADJUSTMENT, OR RELOCATION OF ANY UTILITIES AFFECTED BY THE PROPOSED NEW WORK.

7. COMPLY WITH THE GOVERNING AGENCY NPDES CONSTRUCTION REQUIREMENTS AND PROVIDE APPROPRIATE MITIGATION MEASURES OR PROTECTION AND RESTORATION AT ALL LOCATIONS AS REQUIRED BY THEIR OPERATIONS, AND AS DIRECTED BY ENGINEER. SPECIAL CONSTRUCTION REQUIREMENTS, TEMPORARY PROTECTIVE FENCING OR BARRICADES, SHEETING, SHORING, EROSION PROTECTION, AND SURFACE RESTORATION AT CERTAIN LOCATIONS ARE INDICATED ON THE DRAWINGS TO BRING ATTENTION TO SENSITIVE AREAS.

8. THE CONTRACTOR SHALL BE RESPONSIBLE FOR THE PROTECTION OF ALL PROPERTY CORNER MARKERS. PROPERTY CORNER MARKERS DAMAGED BY CONSTRUCTION ACTIVITIES SHALL BE REESTABLISHED BY A PROFESSIONAL SURVEYOR LICENSED IN THE STATE OF CALIFORNIA.

9. REFER TO THE GEOTECHNICAL REPORT FOR TEST HOLE LOCATIONS AND THE FINDINGS OF THE GEOTECHNICAL INVESTIGATIONS.

10. CONTRACTOR SHALL INSTALL ALL PIPELINES, PAVING, WALKWAYS, AND CURB AND GUTTER AT A UNIFORM GRADE BETWEEN ELEVATIONS DEPICTED ON THE DRAWINGS.

11. FOR ALL SITE GRADING, SMOOTH PARABOLIC TRANSITIONS SHALL BE MADE BETWEEN CHANGES IN SLOPE. PARABOLIC ROUNDING SHALL APPLY TO ALL CUT AND FILL SECTIONS.

12. FINISHED GRADE ELEVATION AT THE BUILDING FACE, WHERE NOT ADJACENT TO PAVEMENT, SHALL BE APPROXIMATELY 6 INCHES BELOW FINISHED FLOOR ELEVATION UNLESS OTHERWISE NOTED. FINISHED GRADE ELEVATION ADJACENT TO BASINS SHALL BE APPROXIMATE AS INDICATED BY CONTOURS, OR AS REQUIRED TO MEET STAIR LANDINGS.

13. THE CONTRACTOR'S OPERATIONS SHALL CONFORM TO THE RULES AND REGULATIONS OF THE STATE CONSTRUCTION SAFETY ORDERS PERTAINING TO EXCAVATION AND TRENCHING.

14. RESTRAINED JOINTS SHALL BE PROVIDED FOR BURIED PIPING AS INDICATED ON THE DRAWINGS AND/OR AS SCHEDULED IN THE SPECIFICATIONS.

15. THE DRAWINGS INDICATE TYPES OF PIPE SUPPORT SYSTEMS AT VARIOUS LOCATIONS. HOWEVER, All PIPE SUPPORTS, HANGERS, BRACKETS, INSERTS OR BRACES ARE NOT SHOWN.

16. THE TERM "PROPOSED" AS INDICATED ON THE DRAWINGS MEANS THE ITEM IS DESIGNED OR PLANNED TO BE PROVIDED BY OWNER OR OTHERS SEPARATE FROM THIS CONTRACT. THE TERM "FUTURE" AS INDICATED ON THE DRAWINGS REFERS TO THE ENGINEER'S INTERPRETATION OF THE ITEM FOR THE FUTURE, BASED ON AVAILABLE INFORMATION.

17. UNLESS OTHERWISE SPECIFIED, INDICATED ON THE DRAWINGS, OR DIRECTED BY THE ENGINEER, INSTALL PIPELINES SLOPING DOWNWARD FROM AN AIR VALVE. HIGH POINTS IN THE PIPELINE WILL NOT BE PERMITTED EXCEPT AT LOCATIONS OF AIR VALVES AS INDICATED ON THE DRAWINGS. REVIEW THE PIPELINE PROFILE REQUIREMENTS WITH THE ENGINEER PRIOR TO PREPARING LAYING SCHEDULES AND PERFORMING FIELD STAKING.

18. FIELD VERIFY PRECISE LOCATION, ELEVATION, AND ARRANGEMENT OF CONNECTIONS OF NEW PIPELINES WITH EXISTING PIPELINES BASED ON FIELD CONDITIONS, INCLUDING EXPOSING EXISTING PIPING PRIOR TO FABRICATING NEW PIPING. PROVIDE FITTINGS, ADAPTERS, SOLID SLEEVE CLOSURES, AND HARNESSED MECHANICAL COUPLING; ROTATE FITTINGS; DEFLECT JOINTS; AND MODIFY EXISTING PIPING AS APPLICABLE AND AS REQUIRED TO MAKE CONNECTIONS, INCLUDING ADJUSTMENTS FOR ANY OFFSETS IN CENTERLINE ELEVATIONS BETWEEN PIPELINES. PROVIDE TEMPORARY PLUG WITH FACTORY OUTLET SIZED AS REQUIRED FOR TESTING AND DISINFECTION WORK BEFORE MAKING CONNECTION, WHEN APPLICABLE. COORDINATE MAKING EACH CONNECTION WITH THE OWNER.

NO.	BY	CHK	APP
0	KEZ	RT	EVB

REVISIONS AND RECORD OF USE

ISSUED FOR CONSTRUCTION

5/19/2020

DATE

REGISTERED PROFESSIONAL ENGINEER
ERICK V. BEVINGTON
No. C 78836
CIVIL
STATE OF CALIFORNIA

5/20/2020

BLACK & VEATCH

JOINT VENTURE

BLACK & VEATCH

FILANC

CITY OF MORRO BAY
MORRO BAY WATER
RECLAMATION FACILITY (WRF)

GENERAL
GENERAL NOTES

DESIGNED: EVB, KEZ
DETAILED: MAK
CHECKED: EVB
APPROVED: EVB
DATE: 5/19/2020

0 1/2 1

IF THIS BAR DOES NOT MEASURE 1" THEN DRAWING IS NOT TO FULL SCALE

PROJECT NO.
400530

00-G-009
SHEET
9 OF 412

D400530
FD81203_PW

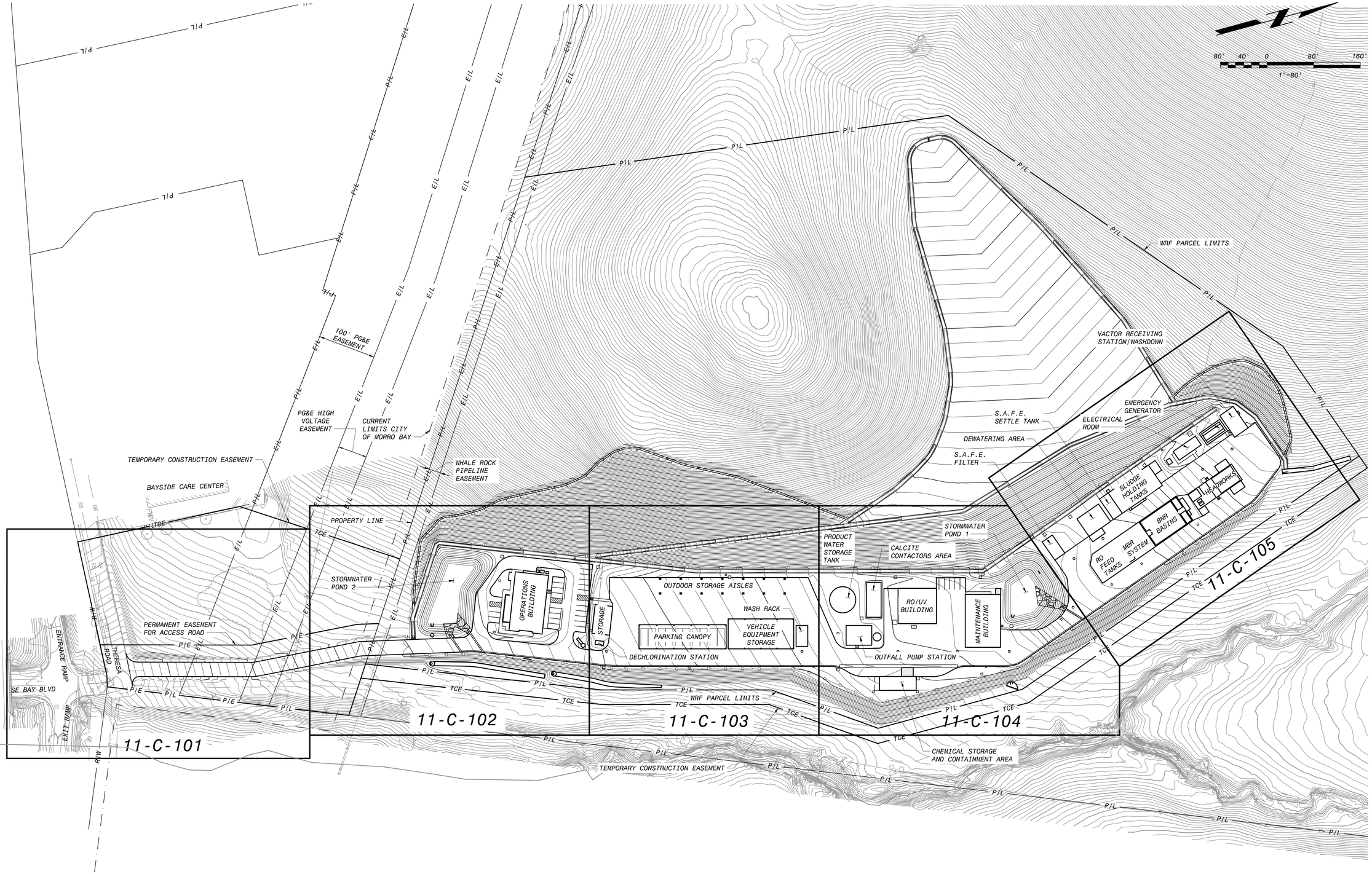

NO.	BY	CHK	APP
0	KEZ	RWF	EVB

DATE	REVISIONS AND RECORD OF USE
5/19/2020	ISSUED FOR CONSTRUCTION

REGISTERED PROFESSIONAL ENGINEER
ERICK V. BEVINGTON
No. C 78836
CIVIL
STATE OF CALIFORNIA
5/22/2020

BLACK & VEATCH
JOINT VENTURE
BLACK&VEATCH
FILANC

CITY OF MORRO BAY
MORRO BAY WATER
RECLAMATION FACILITY (WRF)

SITE - OVERALL
CIVIL
GRADING AND PAVING KEY PLAN

DESIGNED: KEZ
DETAILED: SMM
CHECKED: RWF
APPROVED: EVB
DATE: 5/19/2020

0 1/2 1
IF THIS BAR DOES NOT MEASURE 1" THEN DRAWING IS NOT TO FULL SCALE

PROJECT NO.
400530

11-C-001
SHEET
10 OF 412

FD9000A
D400530
PLOTTED: 5/21/2020 12:16 PM FILE: C:\pw_working\bvw_americas\d0683625\400530-11-C-001.dwg

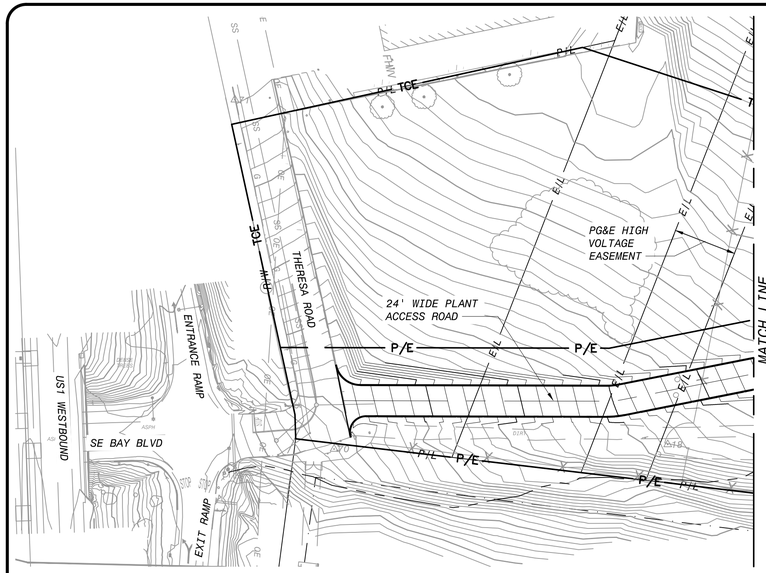

NOTES:

1. UNLESS OTHERWISE NOTED, ALL CURB SHALL HAVE 6 INCH FACE HEIGHT AND SHALL BE TYPE A-2 WITH GUTTER OR TYPE C WITHOUT GUTTER, AS INDICATED AND IN ACCORDANCE WITH THE CITY OF MORRO BAY STANDARD DETAILS.
2. RIBBON CURBS SHALL BE PER DETAIL C ON M-00-514.
3. UNLESS OTHERWISE NOTED, ALL SITE ACCESS ROADWAYS AND OTHER PAVED PARKING AREAS SHALL BE 3 INCHES AC ON 12 INCHES AGGREGATE BASE. ASPHALT AND AGGREGATE BASE MATERIALS SHALL BE PER CALTRANS 2015 STANDARDS.
4. CROSS GUTTERS SHALL BE SIMILAR TO SLO COUNTY DPW STANDARD DETAIL D-5.
5. PAVEMENT AND GUTTERS SHALL BE GRADED AND WARPED IF NECESSARY TO ENSURE POSITIVE DRAINAGE.
6. DRAIN CURB CUTS SHALL HAVE 12 INCH TRANSITIONS ON EACH SIDE OF 12 INCH CURB OPENINGS FLUSH WITH PAVEMENT.
7. SIDEWALKS SHALL BE SIMILAR TO CITY OF MORRO BAY STANDARD DETAIL B-5 WITH #4 REINFORCING PLACED AT 24" EACH WAY. DOWEL TO STRUCTURES AT DOORWAYS. OTHERWISE PROVIDE SEPARATION FROM STRUCTURES. PROVIDE 24 INCHES NON-EXPANSIVE MATERIAL BELOW SIDEWALKS.
8. GUARD POST LOCATIONS ARE APPROXIMATE. ADJUST IN FIELD. UNLESS OTHERWISE NOTED, GUARD POSTS SHALL BE PER DETAIL A/00-M-514.
9. ON ACCESS ROAD, THE MINIMUM VERTICAL CURVE LENGTH ALLOWABLE AT THE INTERSECTION OF TWO GRADES SHALL BE 50 FEET EXCEPT IN THE HEADWORKS AREA WHERE THE MINIMUM VERTICAL CURVE LENGTH SHALL BE 40 FEET. VERTICAL CURVES MAY BE ELIMINATED WHERE THE ALGEBRAIC DIFFERENCE IN GRADES DOES NOT EXCEED 2 PERCENT.

LEGEND

- AC PAVEMENT
- CONCRETE SIDEWALK/PAVEMENT

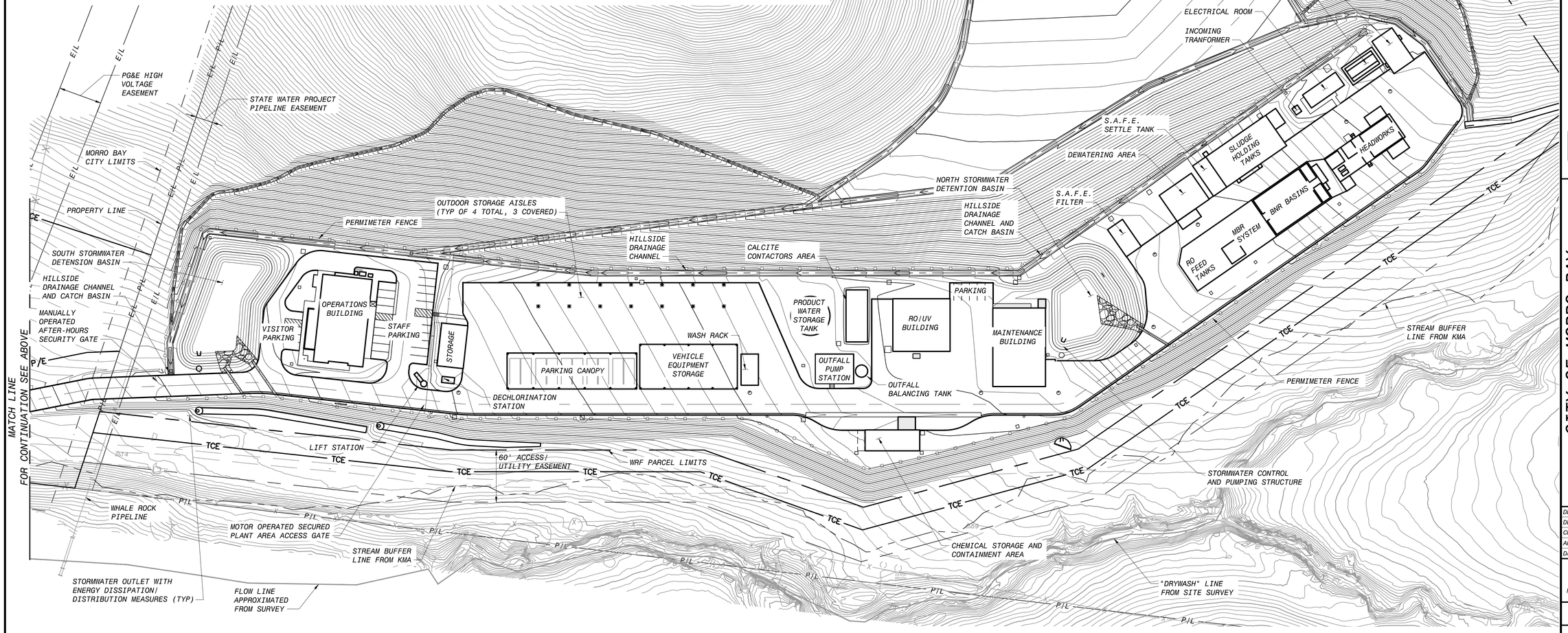

NO.	BY	CHK	APP	DATE	REVISIONS AND RECORD OF USE
0	KEZ	RWF	EVB	5/19/2020	ISSUED FOR CONSTRUCTION

REGISTERED PROFESSIONAL ENGINEER
ERICK V. BEVINGTON
No. C 78836
CIVIL
STATE OF CALIFORNIA
5/22/2020

BLACK & VEATCH
JOINT VENTURE
BLACK & VEATCH
FILANC

CITY OF MORRO BAY
MORRO BAY WATER
RECLAMATION FACILITY (WRF)

SITE - OVERALL
CIVIL
GRADING AND PAVING OVERVIEW

DESIGNED:	KEZ
DETAILED:	SMM
CHECKED:	RWF
APPROVED:	EVB
DATE:	5/19/2020

0 1/2 1
IF THIS BAR DOES NOT MEASURE 1" THEN DRAWING IS NOT TO FULL SCALE

PROJECT NO.
400530

11-C-002
SHEET
11 OF 412

F09000A
D400530
PLOTTED: 5/21/2020 12:23 PM FILE: C:\pw_working\bvw_americas\d0883625\400530-11-C-002.dwg



NOTES:

1. OFFSITE AND HILLSIDE DRAINAGE IS CAPTURED VIA PERIMETER SWALES AND DIVERTED AROUND THE WRF PLANT SITE. THIS IS DONE TO SEGREGATE UNDEVELOPED AREA FLOWS FROM DEVELOPED WRF AREA FLOWS TO BETTER CONTROL STORMWATER QUALITY AND FLOW. SEE SITE PREPARATION DRAWINGS (AREA 10) AND DRAINAGE REPORT FOR DETAILS ABOUT THIS SYSTEM.
2. WRF PLANT AREA STORMWATER PONDS AND OUTLET CONTROL STRUCTURES ARE TO BE CONSTRUCTED WITH EARLY (SITE PREPARATION) WORK. SEE SITE PREPARATION DRAWINGS (AREA 10) AND DRAINAGE REPORT FOR DETAILS ABOUT THIS SYSTEM.
3. SEE DRAWINGS 11-C-601 AND 11-C-602 FOR COORDINATE AND CURVE TABLES.
4. ROADWAY COORDINATES ARE LOCATED AT EDGE OF CONCRETE WHERE CURB OR CURB AND GUTTER MEET ASPHALT.

DATE	REVISIONS AND RECORD OF USE	NO.	BY	CHK	APP
5/19/2020	ISSUED FOR CONSTRUCTION	0	KEZ	RWF	EVB

REGISTERED PROFESSIONAL ENGINEER
ERICK V. BEVINGTON
No. C 78836
CIVIL
STATE OF CALIFORNIA
5/22/2020

BLACK & VEATCH
JOINT VENTURE
FILANC
BLACK & VEATCH

CITY OF MORRO BAY
MORRO BAY WATER RECLAMATION FACILITY (WRF)

SITE - ACCESS ROAD AREA
CIVIL
GRADING AND PAVING PLAN

DESIGNED: KEZ
DETAILED: SMM
CHECKED: RWF
APPROVED: EVB
DATE: 5/19/2020

0 1/2 1
IF THIS BAR DOES NOT MEASURE 1" THEN DRAWING IS NOT TO FULL SCALE

PROJECT NO.
400530

11-C-101
SHEET
12 OF 412

FD9000A
D400530
PLOTTED: 5/21/2020 12:19 PM FILE: C:\pw_working\bvw_americas\d0683625\400530-11-C-101-105.dwg

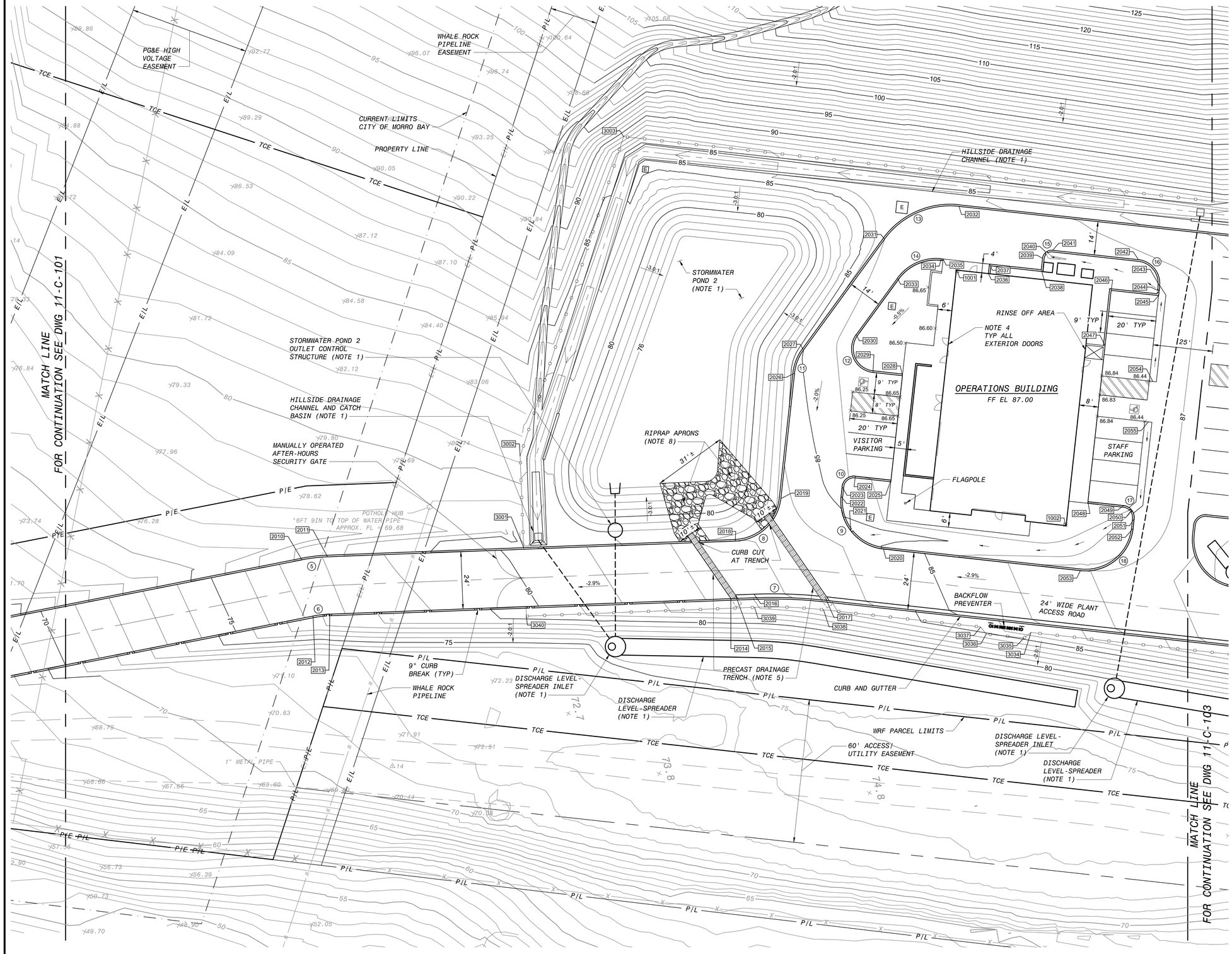

NOTES:

1. *OFFSITE AND HILLSIDE DRAINAGE IS CAPTURED VIA PERIMETER SWALES AND DIVERTED AROUND THE WRF PLANT SITE. THIS IS DONE TO SEGREGATE UNDEVELOPED AREA FLOWS FROM DEVELOPED WRF AREA FLOWS TO BETTER CONTROL STORMWATER QUALITY AND FLOW. SEE SITE PREPARATION DRAWINGS (AREA 10) AND DRAINAGE REPORT FOR DETAILS ABOUT THIS SYSTEM.*
2. *WRF PLANT AREA STORMWATER PONDS AND OUTLET CONTROL STRUCTURES ARE TO BE CONSTRUCTED WITH EARLY (SITE PREPARATION) WORK. SEE SITE PREPARATION DRAWINGS (AREA 10) AND DRAINAGE REPORT FOR DETAILS ABOUT THIS SYSTEM.*
3. *SEE STRUCTURAL DRAWINGS FOR SPECIFIC LOCATION OF INDICATED BUILDING COORDINATE POINTS.*
4. *ADA ACCESS ZONE. SLOPE PAVING FROM 1/4" BELOW INTERIOR ELEVATION AWAY AT NO MORE THAN 2% FOR 60" OUTWARD FROM BUILDING AND 42" FROM BOTH SIDES OF DOOR.*
5. *TRENCHES TO BE RATED FOR H-20 TRAFFIC, HAVING BOLT DOWN GRATING WITH HDG FINISH. 23" X 23" INSIDE DIMENSIONS, JENSEN PRECAST MODEL 2222 OR EQUAL. PLACE WITH MIN 9" X 9" CONCRETE COLLAR ALONG BOTH SIDES OF TRENCH LENGTH. DISCHARGE INTO POND ONLY. SLOPE 0.5% TO DISCHARGE END. REMOVE GRATING AND CONCRETE FILL TRENCH AT UPSTREAM END WHERE BEYOND CURB FACE.*
6. *SEE DRAWINGS 11-C-601 AND 11-C-602 FOR COORDINATE AND CURVE TABLES.*
7. *ROADWAY COORDINATES ARE LOCATED AT EDGE OF ASPHALT WHERE CURB OR CURB AND GUTTER BEGIN.*
8. *CALTRANS CLASS I RIPRAP APRON WITH GEOFABRIC UNDERLAYMENT PER 2015 CALTRANS STANDARD SPECIFICATIONS. 18" DEPTH. CREATE FLOW BY ALIGNING WITH FLOW LINE AND CROSS SECTIONAL AREA OF FEEDING TRENCH DRAIN AT TOP AND FLATTEN OUT SO FLOW FEATHERS OUT AS IT APPROACHES BOTTOM.*

NO.	BY	CHK	APP	DATE	REVISIONS AND RECORD OF USE
0	KEZ	RWF	EVB	5/19/2020	ISSUED FOR CONSTRUCTION

REGISTERED PROFESSIONAL ENGINEER
ERICK V. BEVINGTON
No. C 78836
CIVIL
STATE OF CALIFORNIA
5/22/2020

BLACK & VEATCH
JOINT VENTURE
BLACK & VEATCH
FILANC

CITY OF MORRO BAY
MORRO BAY WATER RECLAMATION FACILITY (WRF)

SITE - SOUTH OPERATIONS AREA
CIVIL
GRADING AND PAVING PLAN

DESIGNED:	KEZ
DETAILED:	SMM
CHECKED:	RWF
APPROVED:	EVB
DATE:	5/19/2020

0 1/2 1
IF THIS BAR DOES NOT MEASURE 1" THEN DRAWING IS NOT TO FULL SCALE

PROJECT NO.
400530

11-C-102
SHEET
13 OF 412

FB9000A
D400530
PLOTTED: 5/21/2020 11:27 AM FILE: C:\pw_working\bvw_americas\d0683625\400530-11-C-101-105.dwg

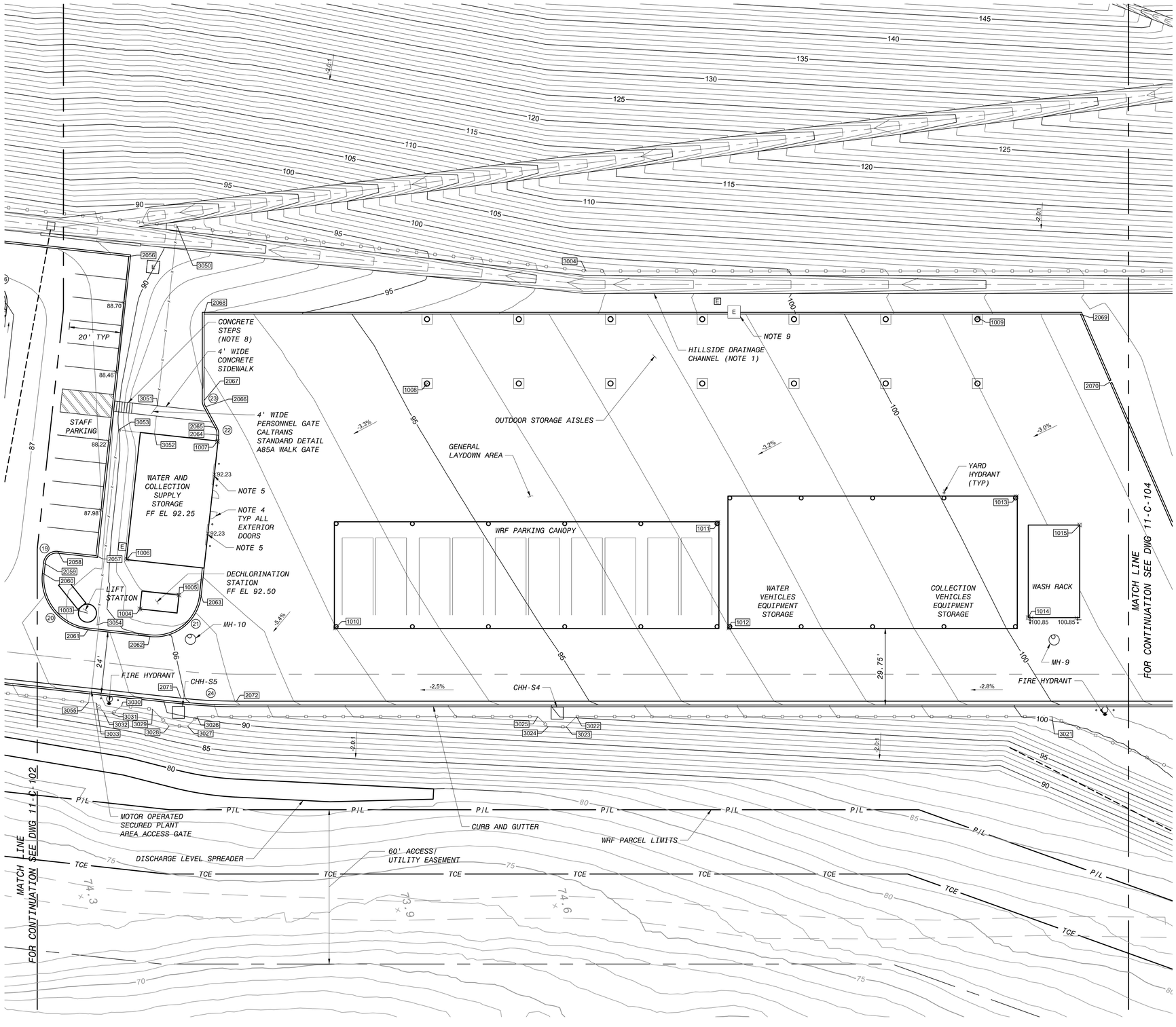

NOTES:

1. OFFSITE AND HILLSIDE DRAINAGE IS CAPTURED VIA PERIMETER SWALES AND DIVERTED AROUND THE WRF PLANT SITE. THIS IS DONE TO SEGREGATE UNDEVELOPED AREA FLOWS FROM DEVELOPED WRF AREA FLOWS TO BETTER CONTROL STORMWATER QUALITY AND FLOW. SEE SITE PREPARATION DRAWINGS (AREA 10) AND DRAINAGE REPORT FOR DETAILS ABOUT THIS SYSTEM.
2. WRF PLANT AREA STORMWATER PONDS AND OUTLET CONTROL STRUCTURES ARE TO BE CONSTRUCTED WITH EARLY (SITE PREPARATION) WORK. SEE SITE PREPARATION DRAWINGS (AREA 10) AND DRAINAGE REPORT FOR DETAILS ABOUT THIS SYSTEM.
3. SEE STRUCTURAL DRAWINGS FOR SPECIFIC LOCATION OF INDICATED BUILDING COORDINATE POINTS.
4. ADA ACCESS ZONE. SLOPE PAVING FROM 1/4" BELOW INTERIOR ELEVATION AWAY AT NO MORE THAN 2% FOR 60" OUTWARD FROM BUILDING AND 42" FROM BOTH SIDES OF DOOR.
5. VEHICLE ACCESS ZONE. SLOPE PAVING FROM 1/4" BELOW INTERIOR ELEVATION AWAY AT NO MORE THAN 5% FOR 60" OUTWARD FROM BUILDING.
6. SEE DRAWINGS 11-C-601 AND 11-C-602 FOR COORDINATE AND CURVE TABLES.
7. ROADWAY COORDINATES ARE LOCATED AT EDGE OF ASPHALT WHERE CURB OR CURB AND GUTTER BEGIN.
8. CONCRETE STAIRS SHALL HAVE 6 RISERS AT 8-INCHES TALL AND 11-INCHES DEEP. STEP WIDTH SHALL MATCH SIDEWALK WIDTH. HANDRAIL SHALL BE PROVIDED PER CAL-OSHA.
9. POUR CURB UP TO ELECTRICAL HANDHOLE. HANDHOLE SHALL BE SET PER ELECTRICAL DRAWINGS AND DETAILS. TOP SHALL BE EQUAL TO OR GREATER THAN THE HIGHER OF TOP OF CURB OR GRADE.

NO.	BY	CHK	APP	DATE	REVISIONS AND RECORD OF USE
0	KEZ	RWF	EVB	5/19/2020	ISSUED FOR CONSTRUCTION

REGISTERED PROFESSIONAL ENGINEER ERICK V. BEVINGTON No. C 78836 CIVIL STATE OF CALIFORNIA 5/22/2020

BLACK & VEATCH

JOINT VENTURE

BLACK & VEATCH

FILANC

CITY OF MORRO BAY
MORRO BAY WATER RECLAMATION FACILITY (WRF)

SITE - NORTH OPERATIONS AREA CIVIL
GRADING AND PAVING PLAN

DESIGNED: KEZ
DETAILED: SMM
CHECKED: RWF
APPROVED: EVB
DATE: 5/19/2020

0 1/2 1
IF THIS BAR DOES NOT MEASURE 1" THEN DRAWING IS NOT TO FULL SCALE

PROJECT NO.
400530

11-C-103
SHEET
14 OF 412

F08000A
D400530
PLOTTED: 5/21/2020 12:19 PM FILE: C:\pw_working\bvw_americas\d0683625\400530-11-C-101-105.dwg

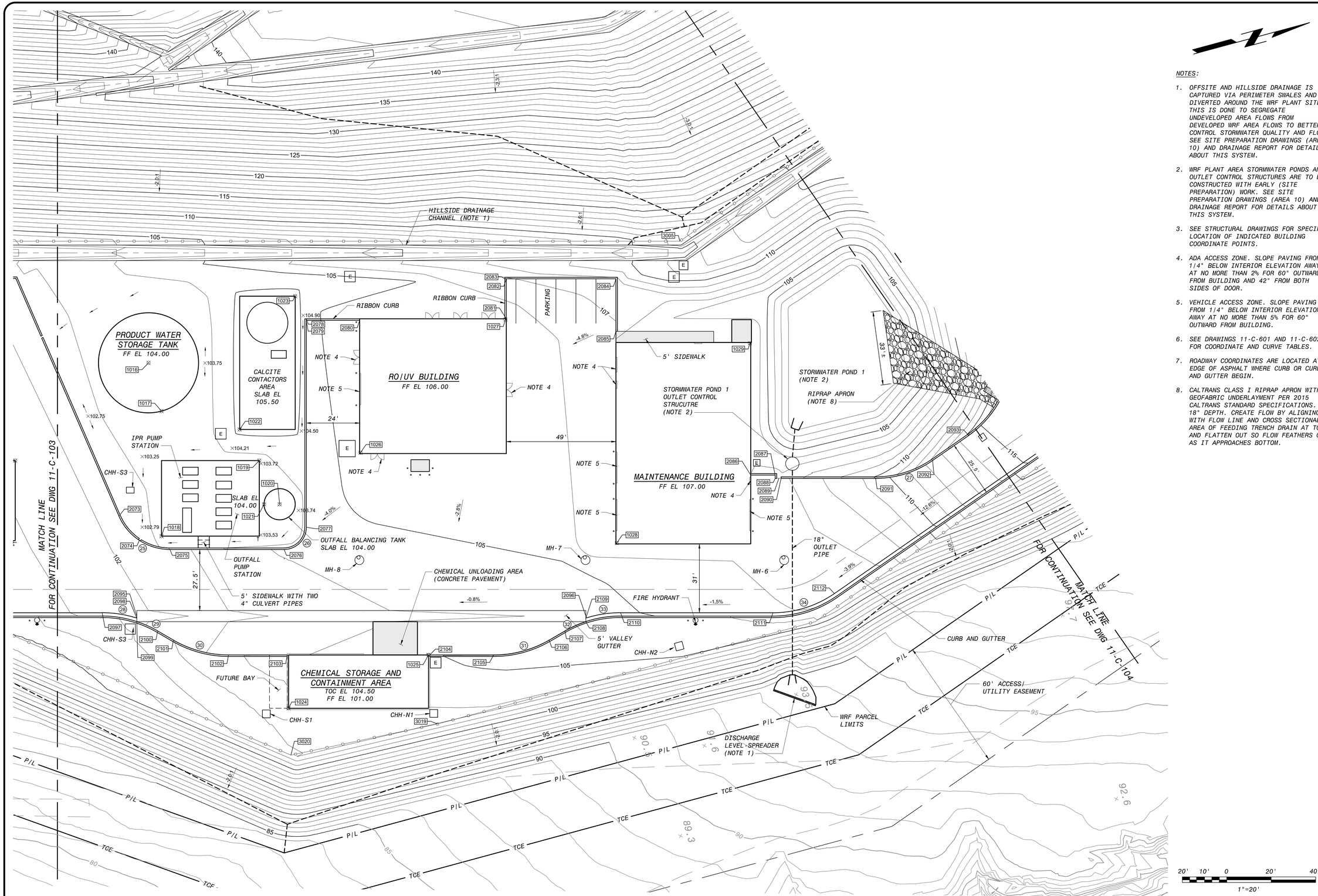

NOTES:

1. *OFFSITE AND HILLSIDE DRAINAGE IS CAPTURED VIA PERIMETER SWALES AND DIVERTED AROUND THE WRF PLANT SITE. THIS IS DONE TO SEGREGATE UNDEVELOPED AREA FLOWS FROM DEVELOPED WRF AREA FLOWS TO BETTER CONTROL STORMWATER QUALITY AND FLOW. SEE SITE PREPARATION DRAWINGS (AREA 10) AND DRAINAGE REPORT FOR DETAILS ABOUT THIS SYSTEM.*
2. *WRF PLANT AREA STORMWATER PONDS AND OUTLET CONTROL STRUCTURES ARE TO BE CONSTRUCTED WITH EARLY (SITE PREPARATION) WORK. SEE SITE PREPARATION DRAWINGS (AREA 10) AND DRAINAGE REPORT FOR DETAILS ABOUT THIS SYSTEM.*
3. *SEE STRUCTURAL DRAWINGS FOR SPECIFIC LOCATION OF INDICATED BUILDING COORDINATE POINTS.*
4. *ADA ACCESS ZONE. SLOPE PAVING FROM 1/4" BELOW INTERIOR ELEVATION AWAY AT NO MORE THAN 2% FOR 60" OUTWARD FROM BUILDING AND 42" FROM BOTH SIDES OF DOOR.*
5. *VEHICLE ACCESS ZONE. SLOPE PAVING FROM 1/4" BELOW INTERIOR ELEVATION AWAY AT NO MORE THAN 5% FOR 60" OUTWARD FROM BUILDING.*
6. *SEE DRAWINGS 11-C-601 AND 11-C-602 FOR COORDINATE AND CURVE TABLES.*
7. *ROADWAY COORDINATES ARE LOCATED AT EDGE OF ASPHALT WHERE CURB OR CURB AND GUTTER BEGIN.*
8. *CALTRANS CLASS I RIPRAP APRON WITH GEOFABRIC UNDERLAYMENT PER 2015 CALTRANS STANDARD SPECIFICATIONS. 18" DEPTH. CREATE FLOW BY ALIGNING WITH FLOW LINE AND CROSS SECTIONAL AREA OF FEEDING TRENCH DRAIN AT TOP AND FLATTEN OUT SO FLOW FEATHERS OUT AS IT APPROACHES BOTTOM.*

NO.	BY	CHK	APP
0	KEZ	RWF	EVB

DATE	REVISIONS AND RECORD OF USE
5/19/2020	ISSUED FOR CONSTRUCTION

REGISTERED PROFESSIONAL ENGINEER
ERICK V. BEVINGTON
No. C 78836
CIVIL
STATE OF CALIFORNIA
5/22/2020

BLACK & VEATCH
JOINT VENTURE
BLACK & VEATCH
FILANC

CITY OF MORRO BAY
MORRO BAY WATER RECLAMATION FACILITY (WRF)

SITE - SOUTH PROCESS AREA CIVIL
GRADING AND PAVING PLAN

DESIGNED:	KEZ
DETAILED:	SMM
CHECKED:	RWF
APPROVED:	EVB
DATE:	5/19/2020

0 1/2 1
IF THIS BAR DOES NOT MEASURE 1" THEN DRAWING IS NOT TO FULL SCALE

PROJECT NO.
400530

11-C-104
SHEET
15 OF 412

FD9000A
D400530
PLOTTED: 5/21/2020 12:18 PM FILE: C:\pw_working\bvw_americas\d0683625\400530-11-C-101-105.dwg

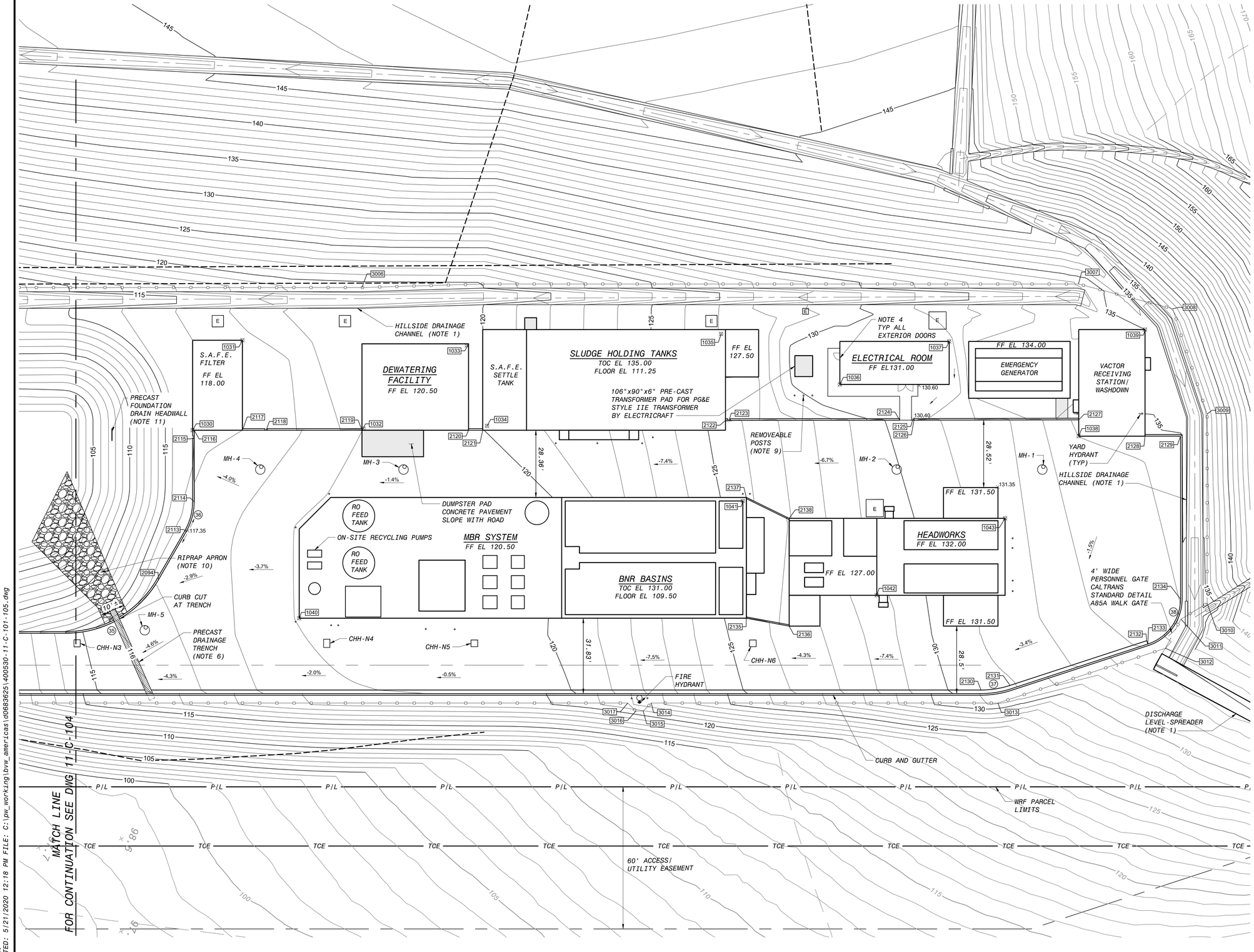

NOTES:

1. OFFSITE AND HILLSIDE DRAINAGE IS CAPTURED VIA PERIMETER SWALES AND DIVERTED AROUND THE WRF PLANT SITE. THIS IS DONE TO SEGREGATE UNDEVELOPED AREA FLOWS FROM DEVELOPED WRF AREA FLOWS TO BETTER CONTROL STORMWATER QUALITY AND FLOW. SEE SITE PREPARATION DRAWINGS (AREA 10) AND DRAINAGE REPORT FOR DETAILS ABOUT THIS SYSTEM.
2. WRF PLANT AREA STORMWATER PONDS AND OUTLET CONTROL STRUCTURES ARE TO BE CONSTRUCTED WITH EARLY (SITE PREPARATION) WORK. SEE SITE PREPARATION DRAWINGS (AREA 10) AND DRAINAGE REPORT FOR DETAILS ABOUT THIS SYSTEM.
3. SEE STRUCTURAL DRAWINGS FOR SPECIFIC LOCATION OF INDICATED BUILDING COORDINATE POINTS.
4. ADA ACCESS ZONE. SLOPE PAVING FROM 1/4" BELOW INTERIOR ELEVATION AWAY AT NO MORE THAN 2% FOR 60" OUTWARD FROM BUILDING AND 42" FROM BOTH SIDES OF DOOR.
5. VEHICLE ACCESS ZONE. SLOPE PAVING FROM 1/4" BELOW INTERIOR ELEVATION AWAY AT NO MORE THAN 5% FOR 60" OUTWARD FROM BUILDING.
6. TRENCHES TO BE RATED FOR H-20 TRAFFIC, HAVING BOLT DOWN GRATING WITH HDG FINISH. 23" X 23" INSIDE DIMENSIONS, JENSEN PRECAST MODEL 2222 OR EQUAL. PLACE WITH MIN 9" X 9" CONCRETE COLLAR ALONG BOTH SIDES OF TRENCH LENGTH. DISCHARGE INTO POND ONLY. SLOPE 0.5% TO DISCHARGE END. REMOVE GRATING AND CONCRETE FILL TRENCH AT UPSTREAM END WHERE BEYOND CURB FACE.
7. SEE DRAWINGS 11-C-601 AND 11-C-602 FOR COORDINATE AND CURVE TABLES.
8. ROADWAY COORDINATES ARE LOCATED AT EDGE OF ASPHALT WHERE CURB OR CURB AND GUTTER BEGIN.
9. (3) REMOVEABLE BARRIER POSTS PER PG&E 051122 REQUIREMENTS. 8' AWAY FROM TRANSFORMER.
10. CALTRANS CLASS I RIPRAP APRON WITH GEOFABRIC UNDERLAYMENT PER 2015 CALTRANS STANDARD SPECIFICATIONS. 18" DEPTH. CREATE FLOW BY ALIGNING WITH FLOW LINE AND CROSS SECTIONAL AREA OF FEEDING TRENCH DRAIN AT TOP AND FLATTEN OUT SO FLOW FEATHERS OUT AS IT APPROACHES BOTTOM.
11. CALTRANS D89 OR EQUAL. SLEEVE SIMILAR TO B/00-M-507.

NO.	BY	CHK	APP	DATE	REVISIONS AND RECORD OF USE
0	KEZ	RWF	EVB	5/19/2020	ISSUED FOR CONSTRUCTION

REGISTERED PROFESSIONAL ENGINEER
ERIK V. BEVINGTON
No. C 78836
CIVIL
STATE OF CALIFORNIA
5/22/2020

BLACK & VEATCH
JOINT VENTURE
BLACK & VEATCH
FILANC

CITY OF MORRO BAY
MORRO BAY WATER
RECLAMATION FACILITY (WRF)

SITE - NORTH PROCESS AREA
CIVIL
GRADING AND PAVING PLAN

DESIGNED: KEZ
DETAILED: SMM
CHECKED: RWF
APPROVED: EVB
DATE: 5/19/2020

0 1/2 1
IF THIS BAR DOES NOT MEASURE 1" THEN DRAWING IS NOT TO FULL SCALE

PROJECT NO.
400530

11-C-105
SHEET
16 OF 412

FD9000A
D400530
PLOTTED: 5/21/2020 12:18 PM FILE: C:\pw_working\bvw_americas\d0683625\400530-11-C-101-105.dwg

COORDINATE TABLE - STRUCTURES

POINT NO.	NORTHING	EASTING	DESCRIPTION	REF DWG
1001	2331632.05	5720001.29	OPERATIONS BLDG, INTERSECTION OF GRID LINES 1 AND A	11-C-102, 95-S-101
1002	2331647.96	5720115.60	OPERATIONS BLDG, INTERSECTION OF GRID LINES 8 AND B	11-C-102, 95-S-101
1003	2331711.06	5720153.30	LIFT STATION CENTER	11-C-103
1004	2331731.18	5720157.05	DECHLORINATION STATION PAD SE CORNER	11-C-103, 65-S-101
1005	2331747.24	5720155.83	DECHLORINATION STATION PAD NW CORNER	11-C-103, 65-S-101
1006	2331731.37	5720137.04	WATER AND COLLECTION SUPPLY STORAGE BLDG, INTERSECTION OF GRID LINES 5 AND B	11-C-103, 16-S-101
1007	2331777.33	5720102.09	WATER AND COLLECTION SUPPLY STORAGE BLDG, INTERSECTION OF GRID LINES 1 AND A	11-C-103, 16-S-101
1008	2331861.39	5720102.08	OUTDOOR STORAGE AISLES, INTERSECTION OF GRID LINES 1 AND A	11-C-103, 17-S-101
1009	2332075.38	5720133.21	OUTDOOR STORAGE AISLES, INTERSECTION OF GRID LINES 9 AND B	11-C-103, 17-S-101
1010	2331802.60	5720184.06	PARKING CANOPY, INTERSECTION OF GRID LINES 1 AND A	11-C-103, 14-S-101
1011	2331956.82	5720183.42	PARKING CANOPY, INTERSECTION OF GRID LINES 8 AND B	11-C-103, 14-S-101
1012	2331950.26	5720224.13	VEHICLE EQUIPMENT STORAGE, INTERSECTION OF GRID LINES 1 AND A	11-C-103, 15-S-101
1013	2332071.39	5720204.16	VEHICLE EQUIPMENT STORAGE, INTERSECTION OF GRID LINES 7 AND B	11-C-103, 15-S-101
1014	2332063.58	5720250.74	VEHICLE WASH RACK PAD SE CORNER	11-C-103, 13-S-101
1015	2332092.31	5720221.23	VEHICLE WASH RACK PAD NW CORNER	11-C-103, 13-S-101
1016	2332161.74	5720194.48	PRODUCT WATER STORAGE TANK CENTER	11-C-104, 60-S-101
1017	2332161.68	5720216.98	PRODUCT WATER STORAGE TANK, POINT IN LINE WITH PUMP STATION PAD	11-C-104, 60-S-101
1018	2332146.94	5720271.29	PRODUCT WATER PUMP STATION PAD SE CORNER	11-C-104, 63-S-101
1019	2332198.31	5720250.00	PRODUCT WATER PUMP STATION PAD NW CORNER	11-C-104, 63-S-101
1020	2332202.01	5720271.38	OUTFALL BALANCING TANK CENTER	11-C-104, 63-S-101
1021	2332195.25	5720269.55	OUTFALL BALANCING TANK, POINT IN LINE WITH PUMP STATION PAD	11-C-104, 63-S-101
1022	2332193.45	5720234.17	CALCITE CONTACTORS PAD SE CORNER	11-C-104, 61-S-101
1023	2332233.29	5720182.82	CALCITE CONTACTORS PAD NW CORNER	11-C-104, 61-S-101
1024	2332181.83	5720361.06	CHEMICAL STORAGE AREA SE CORNER	11-C-104, 90-S-101
1025	2332248.92	5720354.40	CHEMICAL STORAGE AREA NW CORNER	11-C-104, 90-S-101
1026	2332243.19	5720258.51	RO/UV BLDG, INTERSECTION OF GRID LINES 6 AND B	11-C-104, 50-S-101
1027	2332321.85	5720217.78	RO/UV BLDG, INTERSECTION OF GRID LINES 1 AND A	11-C-104, 50-S-101
1028	2332343.85	5720327.96	MAINTENANCE BLDG, INTERSECTION OF GRID LINES 7 AND B	11-C-104, 96-S-101
1029	2332425.22	5720256.87	MAINTENANCE BLDG, INTERSECTION OF GRID LINES 1 AND A	11-C-104, 96-S-101
1030	2332531.07	5720224.05	S.A.F.E. FILTER SE CORNER	11-C-105, 73-S-101
1031	2332538.13	5720181.21	S.A.F.E. FILTER NW CORNER	11-C-105, 73-S-101
1032	2332598.44	5720200.10	DEWATERING FACILITY, INTERSECTION OF GRID LINES 1 AND A	11-C-105, 72-S-101
1033	2332628.62	5720150.64	DEWATERING FACILITY, INTERSECTION OF GRID LINES 5 AND B	11-C-105, 72-S-101
1034	2332647.61	5720180.68	S.A.F.E. SETTLE TANK, SE INSIDE WALL CORNER	11-C-105, 71-S-101
1035	2332727.73	5720110.99	SLUDGE HOLDING TANK, NW INSIDE WALL CORNER	11-C-105, 71-S-101
1036	2332782.13	5720114.30	ELECTRICAL ROOM, INTERSECTION OF GRID LINES 1 AND B	11-C-105, 80-S-101
1037	2332819.54	5720081.72	ELECTRICAL ROOM, INTERSECTION OF GRID LINES 5 AND A	11-C-105, 80-S-101
1038	2332884.46	5720101.08	VACTOR STATION PAD SE CORNER	11-C-105, 20-S-101
1039	2332895.77	5720049.30	VACTOR STATION PAD NW CORNER	11-C-105, 20-S-101
1040	2332600.05	5720283.76	MBR SYSTEM PAD SE CORNER	11-C-105, 30-S-101
1041	2332759.99	5720174.38	BNR BASIN, NW INSIDE WALL CORNER	11-C-105, 30-S-101
1042	2332826.64	5720192.96	HEADWORKS NORTH PAD, SE CORDER	11-C-105, 21-S-101
1043	2332866.80	5720144.20	HEADWORKS NORTH PAD, NW CORDER	11-C-105, 21-S-101

COORDINATE TABLE - FENCE

POINT NO.	NORTHING	EASTING	DESCRIPTION	REF DWG
3001	2331426.58	5720065.49	WROUGHT IRON ORNAMENTAL FENCE	11-C-102
3002	2331435.19	5720028.11	WROUGHT IRON ORNAMENTAL FENCE	11-C-102
3003	2331512.03	5719910.41	WROUGHT IRON ORNAMENTAL FENCE	11-C-102
3004	2331932.97	5720075.65	WROUGHT IRON ORNAMENTAL FENCE	11-C-103
3005	2332406.84	5720204.26	WROUGHT IRON ORNAMENTAL FENCE	11-C-104
3006	2332578.26	5720143.33	WROUGHT IRON ORNAMENTAL FENCE	11-C-105
3007	2332862.84	5720040.59	WROUGHT IRON ORNAMENTAL FENCE	11-C-105
3008	2332903.88	5720037.12	WROUGHT IRON ORNAMENTAL FENCE	11-C-105
3009	2332932.46	5720074.13	WROUGHT IRON ORNAMENTAL FENCE	11-C-105
3010	2332959.21	5720149.40	WROUGHT IRON ORNAMENTAL FENCE	11-C-105
3011	2332951.06	5720159.44	WROUGHT IRON ORNAMENTAL FENCE	11-C-105
3012	2332948.96	5720173.23	WROUGHT IRON ORNAMENTAL FENCE	11-C-105
3013	2332890.08	5720218.70	WROUGHT IRON ORNAMENTAL FENCE	11-C-105
3014	2332752.15	5720267.73	WROUGHT IRON ORNAMENTAL FENCE	11-C-105
3015	2332750.10	5720272.08	WROUGHT IRON ORNAMENTAL FENCE	11-C-105
3016	2332747.18	5720273.13	WROUGHT IRON ORNAMENTAL FENCE	11-C-105
3017	2332742.77	5720271.06	WROUGHT IRON ORNAMENTAL FENCE	11-C-105
3018	2332420.78	5720385.51	WROUGHT IRON ORNAMENTAL FENCE	11-C-104
3019	2332244.73	5720385.45	WROUGHT IRON ORNAMENTAL FENCE	11-C-104
3020	2332177.34	5720381.68	WROUGHT IRON ORNAMENTAL FENCE	11-C-104
3021	2332062.41	5720290.31	WROUGHT IRON ORNAMENTAL FENCE	11-C-103
3022	2331884.05	5720241.91	WROUGHT IRON ORNAMENTAL FENCE	11-C-103
3023	2331879.17	5720244.71	WROUGHT IRON ORNAMENTAL FENCE	11-C-103
3024	2331872.26	5720242.83	WROUGHT IRON ORNAMENTAL FENCE	11-C-103
3025	2331869.47	5720237.95	WROUGHT IRON ORNAMENTAL FENCE	11-C-103
3026	2331741.64	5720203.26	WROUGHT IRON ORNAMENTAL FENCE	11-C-103
3027	2331737.14	5720205.84	WROUGHT IRON ORNAMENTAL FENCE	11-C-103
3028	2331730.24	5720203.97	WROUGHT IRON ORNAMENTAL FENCE	11-C-103
3029	2331725.65	5720195.96	WROUGHT IRON ORNAMENTAL FENCE	11-C-103
3030	2331714.45	5720191.57	WROUGHT IRON ORNAMENTAL FENCE	11-C-103
3031	2331710.03	5720193.49	WROUGHT IRON ORNAMENTAL FENCE	11-C-103
3032	2331707.13	5720192.36	WROUGHT IRON ORNAMENTAL FENCE	11-C-103
3033	2331705.19	5720187.93	WROUGHT IRON ORNAMENTAL FENCE	11-C-103
3034	2331622.25	5720155.37	WROUGHT IRON ORNAMENTAL FENCE	11-C-102
3035	2331618.81	5720156.87	WROUGHT IRON ORNAMENTAL FENCE	11-C-102
3036	2331604.01	5720151.06	WROUGHT IRON ORNAMENTAL FENCE	11-C-102
3037	2331602.51	5720147.62	WROUGHT IRON ORNAMENTAL FENCE	11-C-102
3038	2331540.92	5720123.45	WROUGHT IRON ORNAMENTAL FENCE	11-C-102
3039	2331513.31	5720114.90	WROUGHT IRON ORNAMENTAL FENCE	11-C-102
3040	2331420.14	5720093.43	WROUGHT IRON ORNAMENTAL FENCE	11-C-102
3050	2331784.12	5720017.22	6' HIGH CHAIN LINK FENCE	11-C-103
3051	2331758.48	5720082.53	6' HIGH CHAIN LINK FENCE, PERSONNEL GATE	11-C-103
3052	2331754.49	5720092.83	6' HIGH CHAIN LINK FENCE	11-C-103
3053	2331741.29	5720087.74	6' HIGH CHAIN LINK FENCE	11-C-103
3054	2331713.42	5720158.72	6' HIGH CHAIN LINK FENCE, VEHICLE GATE	11-C-103
3055	2331702.39	5720186.83	6' HIGH CHAIN LINK FENCE	11-C-103

NO.	BY	CHK	APP
0	KEZ	RWF	EVB

5/19/2020 DATE — ISSUED FOR CONSTRUCTION — REVISIONS AND RECORD OF USE

REGISTERED PROFESSIONAL ENGINEER — ERICK V. BEVINGTON — No. C 78836 — CIVIL — STATE OF CALIFORNIA

5/22/2020

BLACK & VEATCH JOINT VENTURE — BLACK & VEATCH — FILANC

CITY OF MORRO BAY
MORRO BAY WATER
RECLAMATION FACILITY (WRF)

SITE - OVERALL
CIVIL
COORDINATE TABLES 1

DESIGNED: KEZ
DETAILED: SMM
CHECKED: RWF
APPROVED: EVB
DATE: 5/19/2020

0 1/2 1
IF THIS BAR DOES NOT MEASURE 1" THEN DRAWING IS NOT TO FULL SCALE

PROJECT NO.
400530

11-C-601
SHEET
17 OF 412

F08000A
D400530
PLOTTED: 5/19/2020 6:03 PM FILE: C:\pw_working\bvw_americas\d0883625\400530-11-C-601.dwg

COORDINATE TABLE - PAVING

POINT NO.	NORTHING	EASTING	ELEVATION	DESCRIPTION	REF DWG
2001	2330949.65	5719960.13	52.24	START CURB, BC	11-C-101
2002	2330964.33	5719980.72	51.45	EC	11-C-101
2003	2330945.89	5720018.04	49.93	START CURB	11-C-101
2004	2330945.97	5720016.77	49.94	BC	11-C-101
2005	2330962.38	5720005.07	51.36	EC	11-C-101
2006	2331152.83	5720032.34	64.89	BC	11-C-101
2007	2331161.55	5720033.82	65.66	EC	11-C-101
2008	2331146.49	5720055.48	64.49	BC	11-C-101
2009	2331159.86	5720057.76	65.26	EC	11-C-101
2010	2331335.68	5720046.10	77.61	BC	11-C-102
2011	2331346.32	5720047.69	78.10	EC	11-C-102
2012	2331333.99	5720070.04	77.22	BC	11-C-102
2013	2331340.93	5720071.07	77.70	EC	11-C-102
2014	2331504.69	5720108.81	82.30	END CURB	11-C-102
2015	2331506.98	5720107.79	82.39	START CURB AND GUTTER	11-C-102
2016	2331514.55	5720109.54	82.61	BC	11-C-102
2017	2331542.93	5720118.33	83.50	EC	11-C-102
2018	2331512.76	5720086.04	83.05	BC	11-C-102
2019	2331535.87	5720073.86	83.72	EC	11-C-102
2020	2331571.80	5720105.49	84.51	EC	11-C-102
2021	2331560.64	5720094.54	84.49	CURB CUT	11-C-102
2022	2331560.49	5720079.56	85.31	BC	11-C-102
2023	2331561.95	5720075.84	85.58	EC	11-C-102
2024	2331568.43	5720073.01	86.00	BC	11-C-102
2025	2331582.39	5720078.49	86.65	START CURB	11-C-102
2026	2331555.18	5720024.67	84.79	BC	11-C-102
2027	2331561.31	5720016.36	85.00	EC	11-C-102
2028	2331598.47	5720037.54	86.65	START CURB	11-C-102
2029	2331586.92	5720032.99	86.37	BC	11-C-102
2030	2331584.34	5720015.88	86.49	EC	11-C-102
2031	2331606.23	5719980.46	86.00	BC	11-C-102
2032	2331639.88	5719975.37	86.15	EC	11-C-102
2033	2331607.20	5719997.60	86.67	BC	11-C-102
2034	2331626.99	5719994.61	86.79	EC	11-C-102
2035	2331627.71	5719994.89	86.88	END CURB	11-C-102
2036	2331644.40	5720005.74	86.92	START CURB	11-C-102
2037	2331645.86	5720002.02	86.92	BC	11-C-102
2038	2331666.19	5720010.00	86.21	EC	11-C-102
2039	2331667.94	5720005.54	86.05	BC	11-C-102
2040	2331669.97	5720003.43	85.95	CURB CUT	11-C-102
2041	2331672.90	5720003.38	86.48	EC	11-C-102
2042	2331706.57	5720016.59	86.18	BC	11-C-103
2043	2331712.22	5720029.55	86.33	EC	11-C-102
2044	2331711.45	5720031.52	86.32	CURB CUT	11-C-102
2045	2331710.76	5720033.27	86.26	CURB CORNER	11-C-102
2046	2331692.15	5720025.97	86.72	CURB CORNER	11-C-103
2047	2331683.64	5720047.64	86.83	END CURB	11-C-102
2048	2331659.63	5720108.81	86.64	START CURB	11-C-102
2049	2331673.59	5720114.29	86.12	BC	11-C-102
2050	2331676.34	5720116.95	86.00	CURB CUT	11-C-102
2051	2331676.42	5720120.77	86.09	EC	11-C-102
2052	2331674.95	5720124.50	86.19	BC	11-C-102
2053	2331649.03	5720135.80	86.88	EC	11-C-102
2054	2331699.01	5720067.33	86.40	VG HP	11-C-102
2055	2331692.79	5720083.16	86.40	VG HP	11-C-102
2056	2331762.88	5720023.65	88.86	CURB CORNER	11-C-103
2057	2331720.13	5720132.56	87.82	CURB CORNER	11-C-103
2058	2331706.21	5720127.10	87.75	BC	11-C-103
2059	2331699.73	5720129.93	87.71	EC	11-C-103
2060	2331698.27	5720133.65	87.69	BC	11-C-103

COORDINATE TABLE - PAVING

POINT NO.	NORTHING	EASTING	ELEVATION	DESCRIPTION	REF DWG
2061	2331709.58	5720159.57	88.73	EC	11-C-103
2062	2331732.17	5720168.44	89.60	BC	11-C-103
2063	2331755.52	5720158.22	91.50	EC	11-C-103
2064	2331778.39	5720099.90	92.30	BC	11-C-103
2065	2331778.60	5720096.92	92.38	EC	11-C-103
2066	2331776.43	5720087.83	92.61	BC	11-C-103
2067	2331776.47	5720085.37	92.67	EC	11-C-103
2068	2331785.28	5720052.92	93.50	CURB CORNER	11-C-103
2069	2332114.05	5720142.15	102.40	CURB CORNER	11-C-103
2070	2332118.19	5720170.65	102.75	CURB CUT	11-C-103
2071	2331737.44	5720194.68	89.92	BC	11-C-103
2072	2331757.98	5720201.48	91.03	BC	11-C-103
2073	2332130.82	5720257.53	102.38	BC	11-C-104
2074	2332136.85	5720270.52	102.56	CURB CUT	11-C-104
2075	2332149.01	5720278.07	102.74	EC	11-C-104
2076	2332198.61	5720291.53	104.14	BC	11-C-104
2077	2332210.88	5720284.49	104.23	EC	11-C-104
2078	2332235.45	5720193.96	104.40	END CURB	11-C-104
2079	2332235.27	5720194.61	104.40	START RIBBON CURB	11-C-104
2080	2332258.44	5720200.87	105.99	END RIBBON CURB	11-C-104
2081	2332322.31	5720217.51	105.99	START RIBBON CURB	11-C-104
2082	2332327.03	5720200.14	106.95	END RIBBON CURB	11-C-104
2083	2332326.38	5720199.97	106.95	START CURB	11-C-104
2084	2332374.64	5720213.06	107.50	CURB CORNER	11-C-104
2085	2332368.44	5720235.89	106.92	END CURB	11-C-104
2086	2332410.05	5720314.19	106.99	START CURB	11-C-104
2087	2332420.67	5720317.08	106.78	CURB CORNER	11-C-104
2088	2332420.28	5720318.52	106.75	END CURB	11-C-104
2089	2332421.88	5720318.96	106.75	2' CURB CUT	11-C-104
2090	2332422.85	5720319.22	106.75	START CURB	11-C-104
2091	2332463.89	5720330.36	109.44	BC	11-C-104
2092	2332490.75	5720329.33	112.43	EC	11-C-104
2093	2332509.42	5720322.69	114.43	BC	11-C-104
2094	2332538.61	5720288.44	117.11	EC	11-C-105
2095	2332126.78	5720303.12	101.73	START VG	11-C-104
2096	2332321.82	5720356.05	104.23	END VG	11-C-104
2097	2332112.11	5720297.58	101.40	BC	11-C-104
2098	2332126.54	5720304.01	101.74	EC, END CURB AND GUTTER	11-C-104
2099	2332126.13	5720305.53	102.11	BC, START CURB	11-C-104
2100	2332134.09	5720312.04	102.20	EC	11-C-104
2101	2332139.87	5720317.86	102.48	BC	11-C-104
2102	2332162.06	5720330.82	103.31	EC	11-C-104
2103	2332187.58	5720337.75	103.92	END CURB	11-C-104
2104	2332249.46	5720354.54	104.45	START CURB	11-C-104
2105	2332277.20	5720362.07	104.69	BC	11-C-104
2106	2332303.08	5720362.15	104.76	EC	11-C-104
2107	2332311.01	5720360.05	104.73	BC	11-C-104
2108	2332321.17	5720358.46	104.73	EC, END CURB	11-C-104
2109	2332321.58	5720356.94	104.50	BC, START CURB AND GUTTER	11-C-104
2110	2332337.29	5720358.69	104.87	EC	11-C-104
2111	2332403.46	5720376.65	105.88	BC	11-C-104
2112	2332432.40	5720375.54	106.22	BC	11-C-105
2113	2332542.87	5720265.27	117.35	BC	11-C-105
2114	2332541.84	5720252.37	117.13	EC	11-C-105
2115	2332532.70	5720226.65	116.70	CURB CUT	11-C-105
2116	2332531.70	5720223.83	116.75	END CURB	11-C-105
2117	2332550.86	5720217.02	117.00	START CURB	11-C-105
2118	2332560.28	5720213.67	117.40	CURB CUT	11-C-105
2119	2332598.44	5720200.10	119.00	END CURB	11-C-105
2120	2332640.84	5720185.03	119.89	START CURB	11-C-105

COORDINATE TABLE - PAVING

POINT NO.	NORTHING	EASTING	ELEVATION	DESCRIPTION	REF DWG
2121	2332646.49	5720183.02	120.00	END CURB	11-C-105
2122	2332741.69	5720144.79	126.10	START CURB	11-C-105
2123	2332743.10	5720144.28	125.75	CURB CUT	11-C-105
2124	2332810.97	5720120.04	130.27	END CURB	11-C-105
2125	2332816.15	5720118.19	130.40	CURB CUT	11-C-105
2126	2332816.67	5720118.00	130.43	START CURB	11-C-105
2127	2332882.16	5720094.60	134.28	END CURB	11-C-105
2128	2332910.85	5720091.71	134.12	START CURB	11-C-105
2129	2332924.98	5720086.69	134.42	CURB CORNER	11-C-105
2130	2332881.48	5720215.92	130.62	BC	11-C-105
2131	2332892.39	5720209.97	130.92	EC	11-C-105
2132	2332940.48	5720172.84	133.22	END CURB AND GUTTER	11-C-105
2133	2332941.39	5720174.03	133.12	BC, START CURB	11-C-105
2134	2332948.01	5720151.50	134.02	EC	11-C-105
2135	2332777.98	5720220.52	125.50	START CURB	11-C-105
2136	2332796.13	5720217.60	127.01	END CURB	11-C-105
2137	2332760.89	5720172.46	125.81	START CURB	11-C-105
2138	2332780.89	5720174.73	126.94	END CURB	11-C-105

CURVE DATA TABLE

CURVE	TANGENT (FT)	LENGTH (FT)	RADIUS (FT)	DELTA (°)	REF DWG
1	16.31	27.37	20.00	78.41	11-C-101
2	15.94	23.05	13.00	101.59	11-C-101
3	4.44	8.86	45.00	11.28	11-C-101
4	6.81	13.59	69.00	11.28	11-C-101
5	5.40	10.77	69.00	8.94	11-C-102
6	3.52	7.02	45.00	8.94	11-C-102
7	14.90	29.74	201.50	8.46	11-C-102
8	17.25	28.46	20.00	81.54	11-C-102
9	20.00	31.42	20.00	90.00	11-C-102
10	5.00	7.85	5.00	90.00	11-C-102
11	5.35	10.45	20.00	29.93	11-C-102
12	17.29	20.93	10.00	119.91	11-C-102
13	19.66	35.64	34.00	60.07	11-C-102
14	11.56	20.97	20.00	60.07	11-C-102
15	3.83	6.02	3.83	90.00	11-C-102
16	10.00	15.71	10.00	90.00	11-C-102
17	5.00	7.85	5.00	90.00	11-C-102
18	20.00	31.42	20.00	90.00	11-C-102
19	5.00	7.85	5.00	90.00	11-C-103
20	20.00	31.42	20.00	90.00	11-C-103
21	18.05	28.32	18.00	90.16	11-C-103
22	1.57	3.04	5.00	34.81	11-C-103
23	1.27	2.49	5.00	28.56	11-C-103
24	10.84	21.65	198.50	6.25	11-C-103
25	16.41	29.04	25.00	66.55	11-C-104
26	10.00	15.71	10.00	90.00	11-C-104
27	14.08	27.29	45.00	34.75	11-C-104
28	7.99	15.86	51.50	17.65	11-C-104
29	5.17	10.30	50.00	11.81	11-C-104
30	13.30	25.99	50.00	28.78	11-C-104
31	13.40	26.18	50.00	30.00	11-C-104
32	5.17	10.30	50.00	11.81	11-C-104
33	7.99	15.86	51.50	17.65	11-C-104
34	15.18	29.42	48.50	34.75	11-C-104
35	25.98	47.12	45.00	60.00	11-C-105
36	6.70	13.09	25.00	30.00	11-C-105
37	6.29	12.48	39.50	18.11	11-C-105
38	14.50	25.10	20.00	71.89	11-C-105

NO.	BY	CHK	APP
0	KEZ	RWF	EVB

REVISIONS AND RECORD OF USE

ISSUED FOR CONSTRUCTION 5/19/2020

DATE

REGISTERED PROFESSIONAL ENGINEER
ERICK V. BEVINGTON
No. C 78836
CIVIL
STATE OF CALIFORNIA
5/22/2020

BLACK & VEATCH
JOINT VENTURE
BLACK & VEATCH
FILANC

CITY OF MORRO BAY
MORRO BAY WATER
RECLAMATION FACILITY (WRF)

SITE - OVERALL
CIVIL
COORDINATE TABLES 2

DESIGNED: KEZ
DETAILED: SMM
CHECKED: RWF
APPROVED: EVB
DATE: 5/19/2020

0 1/2 1
IF THIS BAR DOES NOT MEASURE 1" THEN DRAWING IS NOT TO FULL SCALE

PROJECT NO.
400530

11-C-602
SHEET
18 OF 412

FD9000A
D400530
PLOTTED: 5/19/2020 6:04 PM FILE: C:\pw_working\bvw_americas\d0683625\400530-11-C-602.dwg

PIPE, EQUIPMENT & VALVE TAG LEGEND

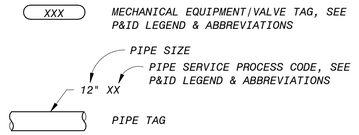

PIPE & FITTINGS SYMBOL LEGEND

DOUBLE LINE

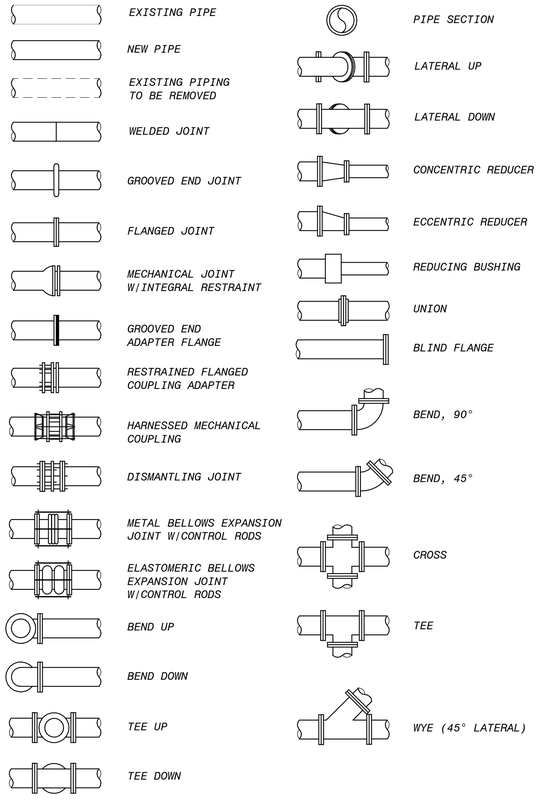

SINGLE LINE

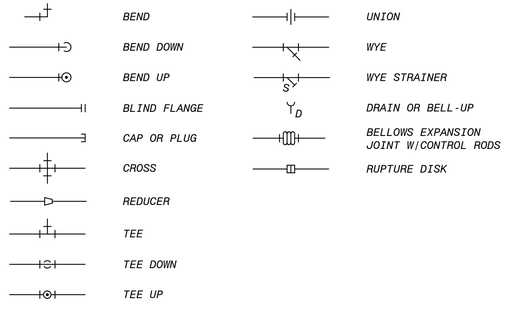

VALVE SYMBOL LEGEND

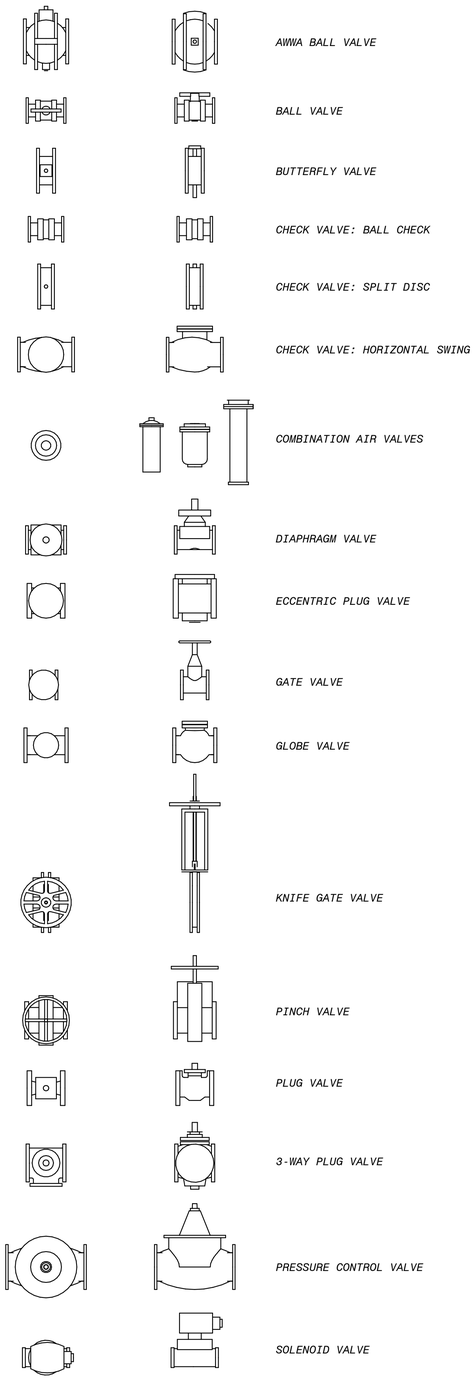

GENERAL PROCESS MECHANICAL NOTES

1. LEGENDS SHOWN IN THIS DRAWING ARE BASED ON A TEMPLATE THAT IS NOT PROJECT SPECIFIC. SOME LEGEND SYMBOLS ARE NOT USED ON THIS PROJECT, BUT ARE SHOWN TO PROVIDE A DICTIONARY FOR SYMBOLS THAT MAY ALSO BE USED DURING THE PROJECT CONSTRUCTION PHASE.
2. FOR PROCESS MECHANICAL ABBREVIATIONS, REFER TO P&ID LEGEND AND ABBREVIATIONS.
3. REFER TO THE P&ID LEGEND AND ABBREVIATIONS FOR SINGLE-LINE VALVE, GATE, ACTUATOR, FITTING, EQUIPMENT, AND OTHER SYMBOLS.
4. FITTING TYPES IN THE LEGEND ON THIS SHEET SHOW FLANGED END CONNECTIONS. FITTINGS FOR OTHER END CONNECTION TYPES ARE SIMILAR.
5. VALVE TYPES IN THE LEGEND ON THIS SHEET REPRESENT THE TYPICAL APPEARANCE FOR EACH TYPE OF VALVE. THE ACTUAL VALVES USED FOR THIS PROJECT MAY VARY IN APPEARANCE.
6. LAY PIPE TO UNIFORM GRADE BETWEEN INDICATED ELEVATION POINTS.
7. SIZE OF FITTINGS SHOWN ON DRAWINGS SHALL MATCH CONNECTING PIPING, UNLESS OTHERWISE INDICATED. TYPE OF JOINT AND FITTING MATERIAL SHALL BE THE SAME AS CONNECTING PIPING.
8. ALL REQUIRED HANGERS, SUPPORTS, BRACES, INSERTS, AND ACCESSORIES ARE NOT SHOWN ON THE DRAWINGS. PIPE SUPPORTS LOCATIONS AND DESIGN WILL BE COMPLETED DURING THE SHOP DRAWINGS.
9. ALL PRESSURIZED OR SURCHARGED PIPELINES, PIPE FITTINGS, COUPLINGS, JOINTS, EXPANSION JOINTS, TANK CONNECTIONS, AND CHANNEL CONNECTIONS SHALL BE PROVIDED WITH THRUST RESTRAINT BASED ON SPECIFIED PRESSURES AND TEMPERATURES.
10. NUMBER AND LOCATION OF UNIONS AND COUPLINGS SHOWN ON DRAWINGS IS ONLY APPROXIMATE. CONTRACTOR SHALL PROVIDE ALL UNIONS AND COUPLINGS REQUIRED BY THE SPECIFICATIONS AND AS NECESSARY TO FACILITATE CONVENIENT REMOVAL OF VALVES AND MECHANICAL EQUIPMENT.
11. ORIENT VALVES AS SPECIFIED.
12. UNLESS NOTED OTHERWISE, ALL ELBOWS 2" AND LARGER SHALL BE STANDARD LONG RADIUS. USE SHORT RADIUS OR REDUCING ELBOWS IN TIGHT AREAS FOR FIT UP.

NO.	BY	CHK	APP
0	KEZ	RWF	EVB

ISSUED FOR CONSTRUCTION
REVISIONS AND RECORD OF USE

DATE: 5/19/2020

REGISTERED PROFESSIONAL ENGINEER
ERICK V. BEVINGTON
No. C 78836
CIVIL
STATE OF CALIFORNIA
5/20/2020

BLACK & VEATCH
JOINT VENTURE
BLACK & VEATCH
FILANC

CITY OF MORRO BAY
MORRO BAY WATER
RECLAMATION FACILITY (WRF)

GENERAL
CIVIL-MECHANICAL
LEGENDS AND GNERAL NOTES

DESIGNED: KEZ
DETAILED: JPS
CHECKED: EVB
APPROVED: EVB
DATE: 5/19/2020

0 1/2 1
IF THIS BAR DOES NOT MEASURE 1" THEN DRAWING IS NOT TO FULL SCALE

PROJECT NO.
400530

00-M-500
SHEET
19 OF 412

PLOTTED: 5/14/2020 4:00:05 PM
D400530

MECHANICAL TIE ROD SCHEDULE

PIPE SIZE (INCHES)	MINIMUM PRESSURE (PSI) (NOTE 1)	TIE RODS		PIPE SPACERS		
		NO. OF RODS (NOTE 2)	DIA OF RODS (INCHES)	DIA OF SPACERS (INCHES)	LENGTH=C (INCHES)	PIPE SCHEDULE
4	350 OR LESS	2	3/4	1	2 1/2	40
6	250 OR LESS 350	2 4	3/4	1	2 1/2	40
8	150 OR LESS 300 350	2 4 6	3/4	1	2 1/2	40
10	200 OR LESS 350	2 4	3/4	1	2 1/2	80
12	150 OR LESS 300 350	2 4 6	3/4	1	2 1/2	80
14	100 OR LESS 200 350	2 4 6	3/4	1	3 1/2	80
16	150 OR LESS 250 350	4 6 8	3/4	1	3 1/2	80
18	150 OR LESS 200 300 350	4 6 8 10	3/4	1	3 1/2	80
20	100 OR LESS 150 200 300 350	4 6 8 10 12	3/4	1	3 1/2	80
24	100 OR LESS 150 200 250 300 350	6 8 10 12 14 16	3/4	1	3 1/2	80
30	100 OR LESS 150 200 250	8 10 12 16	1	1 1/4	4	80
36	100 OR LESS 150 200 250	8 12 18 22	1	1 1/4	4	80
42	100 OR LESS 150 200 250	8 12 16 20	1 1/4	1 1/2	4	80
48	100 OR LESS 150 200 250	12 16 22 28	1 1/4	1 1/2	4	80

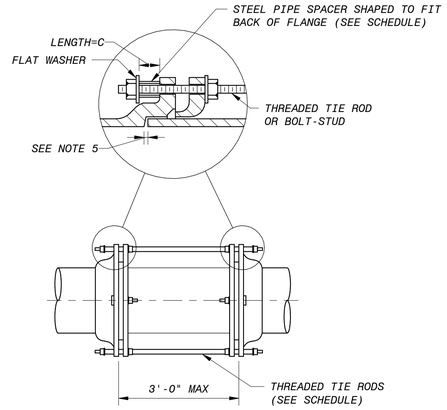

NOTES :

1. PRESSURE SHALL BE THE PRESSURE AT WHICH THE PIPE IS HYDROSTATICALLY TESTED, OR IF THERE IS NO HYDROSTATIC FIELD TEST, IT SHALL BE THE SPECIFIED SHOP TEST PRESSURE.
2. UNLESS OTHERWISE INDICATED, TIE RODS SHALL BE SPACED UNIFORMLY AROUND THE PIPE, BEGINNING WITH THE FIRST TWO AT THE HORIZONTAL CENTERLINE OF THE PIPE, SUBJECT TO THE APPROVAL OF THE ENGINEER.
3. EXCEPT WHERE TIE RODS ARE REQUIRED, BOLTS FOR FOLLOWER RINGS SHALL BE TEE HEAD BOLTS.
4. AT CONTRACTOR'S OPTION, 4" THROUGH 48" MAY BE FURNISHED AS MECHANICAL JOINT STYLE WITH TIE RODS, OR POSITIVE LOCKING SEGMENTS AND/OR RINGS SUCH AS AMERICAN PIPE 14" THROUGH 36" SIZE MAY BE FURNISHED AS FLEX RING STYLE RESTRAINED JOINTS AND 42" THROUGH 64" SIZE MAY BE FURNISHED AS LOC RING STYLE RESTRAINED JOINTS, OR U.S. PIPE "TR-FLEX", OR GRIFFIN PIPE "SNAP-LOCK".
5. FOR PIPING FLEXIBILITY, PROVIDE GAP LARGE ENOUGH TO FACILITATE PIPE ASSEMBLY AND DISASSEMBLY AT ASSOCIATED FLANGED PIPE JOINTS.

A DIP MECHANICAL JOINT COUPLING WITH TIE RODS

NO SCALE

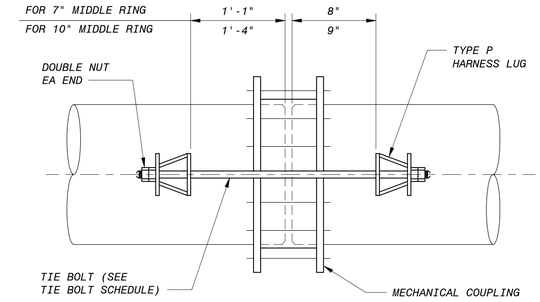

NOTE :

1. THE PIPE FOR LUG DESIGN SHALL INCLUDE WRAPPERS OR PADS OR THE PIPE WALL THICKNESS INCREASED AS REQUIRED TO MEET MINIMUM PIPE THICKNESS IN ACCORDANCE WITH AWWA M-11 DESIGN REQUIREMENTS.

B STEEL PIPE HARNESSED MECHANICAL COUPLING WITH TYPE P LUGS

NO SCALE

DIMENSIONS IN INCHES									
TIE BOLT DIAMETER	T	A	Y	W	X	HB	E	HF	HOLE DIAMETER
5/8	3/8	5	5	1 3/8	5	3 7/8	3	2	3/4
3/4	3/8	5	5	1 1/2	5	4 1/8	3 1/8	2	7/8
7/8	1/2	5 1/2	5	1 5/8	5	4 1/4	3 1/8	2	1
1	1/2	5 3/4	RING	1 3/4	RING	4 1/2	3 1/4	2	1 1/8
1 1/8	1/2	7	RING	1 7/8	RING	4 3/4	3 5/8	2 1/2	1 1/4
1 1/4	5/8	7 1/2	RING	2	RING	5	3 3/4	2 1/2	1 3/8
1 3/8	5/8	8 3/4	RING	2 1/8	RING	5 3/8	3 3/4	2 1/2	1 1/2
1 1/2	3/4	10	RING	2 1/4	RING	5 1/2	3 7/8	2 1/2	1 5/8
1 5/8	3/4	10 3/4	RING	2 3/8	RING	5 5/8	3 7/8	2 1/2	1 3/4
1 3/4	7/8	12	RING	2 1/2	RING	5 7/8	4	2 1/2	1 7/8
1 7/8	7/8	13	RING	2 5/8	RING	6	4	2 1/2	2
2	1	14	RING	2 3/4	RING	6 1/4	4 1/4	2 1/2	2 1/8
2 1/4	1	15 3/4	RING	3	RING	6 3/4	4 5/16	2 1/2	2 3/8

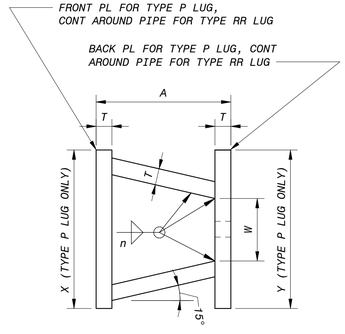

PLAN

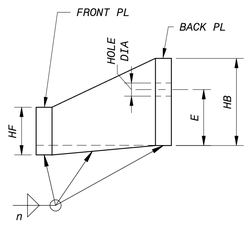

ELEVATION

NOTES :

1. n = PIPE WALL THICKNESS.
2. FOR HARNESS LUG TYPE RR, THE GUSSET PLATES BETWEEN THE FRONT PLATE AND THE BACK PLATE MAY BE PERPENDICULAR TO THE FRONT AND BACK PLATES WITH A MINIMUM CLEAR DISTANCE BETWEEN EACH PAIR OF GUSSET PLATES OF DIMENSION W.

C STEEL PIPE HARNESS LUGS

NO SCALE

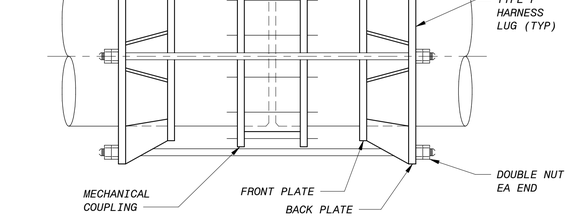

NOTES :

1. THE PIPE FOR LUG DESIGN SHALL INCLUDE WRAPPERS OR PADS OR THE PIPE WALL THICKNESS INCREASED AS REQUIRED TO MEET MINIMUM PIPE THICKNESS IN ACCORDANCE WITH AWWA M-11 DESIGN REQUIREMENTS.
2. WHERE HARNESS LUGS ARE SPECIFIED FOR VERTICAL TURBINE PUMP DISCHARGE OUTLETS, THE NUMBER AND SIZE OF THE TIE RODS FOR THE HARNESS COUPLING MUST EQUAL THE AREA OF THE CONNECTING STEEL PIPE WALL. CONTRACTOR SHALL COORDINATE THIS DESIGN REQUIREMENT WITH THE PUMP AND PIPE MANUFACTURERS.

D STEEL PIPE HARNESSED MECHANICAL COUPLING WITH TYPE RR LUGS

NO SCALE

NO.	BY	CHK	APP'D
0	KEZ	RWF	EVB

REVISIONS AND RECORD OF USE

ISSUED FOR CONSTRUCTION 5/19/2020

DATE

REGISTERED PROFESSIONAL ENGINEER
ERICK V. BEVINGTON
No. C 78836
CIVIL
STATE OF CALIFORNIA
5/20/2020

BLACK & VEATCH
JOINT VENTURE
BLACK & VEATCH
FILANC

CITY OF MORRO BAY
MORRO BAY WATER
RECLAMATION FACILITY (WRF)

GENERAL
CIVIL-MECHANICAL
DETAILS

DESIGNED: KEZ
DETAILED: MAK
CHECKED: EVB
APPROVED: EVB
DATE: 5/19/2020

0 1/2 1
IF THIS BAR DOES NOT MEASURE 1" THEN DRAWING IS NOT TO FULL SCALE

PROJECT NO.
400530

00-M-501
SHEET
20 OF 412

PLOTTED: 5/14/2020 4:04:52 PM
D400530

STEEL PIPE TIE BOLT SCHEDULE FOR HARNESSED JOINTS

NOMINAL PIPE SIZE (INCHES)	PRESSURE (psi) (NOTE 1)	LUG TYPE	TIE BOLT DIA (INCHES)	NO. BOLTS (NOTE 3)
6	250 OR LESS	P	5/8	2
8	250 OR LESS	P	5/8	2
10	50	P	5/8	2
	100	P	5/8	2
	150	P	5/8	2
	200	P	3/4	2
	250	P	3/4	2
12	50	P	5/8	2
	100	P	5/8	2
	150	P		2
	200	P	3/4	2
	250	P	7/8	2
14	50	RR	5/8	2
	100	RR	5/8	2
	150	RR	3/4	2
	200	RR	7/8	2
	250	RR	1	2
16	50	RR	5/8	2
	100	RR	3/4	2
	150	RR	7/8	2
	200	RR	1	2
	250	RR	1 1/8	2
18	50	RR	5/8	2
	100	RR	7/8	2
	150	RR	1	2
	200	RR	1 1/4	2
	250	RR	1 1/4	2
20	50	RR	5/8	2
	100	RR	7/8	2
	150	RR	1 1/8	2
	200	RR	1 1/4	2
	250	RR	1	4
24	50	RR	3/4	2
	100	RR	3/4	4
	150	RR	1	4
	200	RR	1 1/8	4
	250	RR	1 1/4	4
30	50	RR	3/4	4
	100	RR	1	4
	150	RR	1 1/8	4
	200	RR	1 1/4	4
	250	RR	1 3/8	4
36	50	RR	7/8	4
	100	RR	1 1/8	4
	150	RR	1 3/8	4
	200	RR	1 1/4	6
	250	RR	1 3/8	6
42	50	RR	7/8	4
	100	RR	1 1/4	4
	150	RR	1 1/4	6
	200	RR	1 1/2	6
	250	RR	1 3/4	6
48	50	RR	1	4
	100	RR	1 1/2	4
	150	RR	1 1/2	6
	200	RR	1 3/4	6
	250	RR	2	6
54	50	RR	1 1/8	4
	100	RR	1 3/8	4
	150	RR	1 3/4	6
	200	RR	2	6
	250	RR	1 3/4	8
60	50	RR	1 1/4	4
	100	RR	1 1/2	6
	150	RR	1 1/2	8
	200	RR	1 3/4	8
	250	RR	1 3/4	10
66	50	RR	1 3/8	4
	100	RR	1 3/4	6
	150	RR	1 3/4	8
	200	RR	1 3/4	10
	250	RR	1 3/4	12
72	50	RR	1 1/4	6
	100	RR	1 1/2	8
	150	RR	2	8
	200	RR	2	10
	250	RR	2	12
78	50	RR	1 3/8	6
	100	RR	2	6
	150	RR	2	8
	200	RR	2	10
	250	RR	2 1/4	12
84	50	RR	1 1/2	6
	100	RR	1 3/4	8
	150	RR	2	10
	200	RR	2	12
	250	RR	2 1/4	14
90	50	RR	1 1/2	6
	100	RR	2	8
	150	RR	2	10
	200	RR	2 1/4	12
	250	RR	2 1/4	14
96	50	RR	1 3/4	6
	100	RR	2	8
	150	RR	2 1/4	10
	200	RR	2 1/4	12
	250	RR	2 1/4	16

NOTES :

1. PRESSURE SHALL BE THE PRESSURE AT WHICH THE PIPE IS HYDROSTATICALLY TESTED, OR IF THERE IS NO HYDROSTATIC FIELD TEST, IT SHALL BE THE SPECIFIED SHOP TEST PRESSURE.
2. NUMBER OF TIE BOLTS IS BASED ON AN ALLOWABLE STRESS ON NET TENSION AREA OF 40,000 PSI.
3. UNLESS OTHERWISE INDICATED, TIE BOLTS SHALL BE SPACED UNIFORMLY AROUND THE PIPE, BEGINNING WITH THE FIRST TWO AT THE HORIZONTAL CENTERLINE OF THE PIPE, SUBJECT TO THE APPROVAL OF THE ENGINEER.

A STEEL PIPE TIE BOLT SCHEDULE FOR HARNESSED JOINTS
NO SCALE

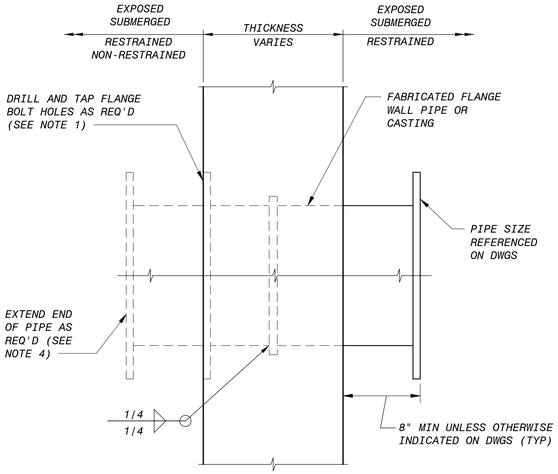

NOTES :

1. WALL PIPE MATERIAL SHALL BE DUCTILE IRON, STEEL OR AS INDICATED ON THE DRAWINGS. STEEL PIPE SHALL BE SCHEDULE 40 FOR PIPE 20 INCHES AND SMALLER, 3/8" FOR PIPE LARGER THAN 20", AND COATINGS SAME AS CONNECTING PIPE.
2. IF CONNECTING STEEL PIPE THICKNESS IS GREATER THAN 3/8", STEEL WALL PIPE THICKNESS SHALL BE INCREASED TO MATCH CONNECTING PIPE.
3. ANNULAR COLLAR SHALL BE SAME MATERIAL AS PIPE, 1/4" X 2" FOR PIPE 20" AND SMALLER, AND 3/8" X 3" FOR PIPE LARGER THAN 20".
4. WALL PIPE MAY BE FLUSH WITH FACE OF WALL OR EXTENDED WITH END AS REQUIRED OR INDICATED ON DRAWINGS.
5. WALL PIPE SHALL BE ORIENTED SO THAT THE BOLT HOLES STRADDLE THE TOP CENTERLINE.

B FLANGED WALL PIPE
NO SCALE

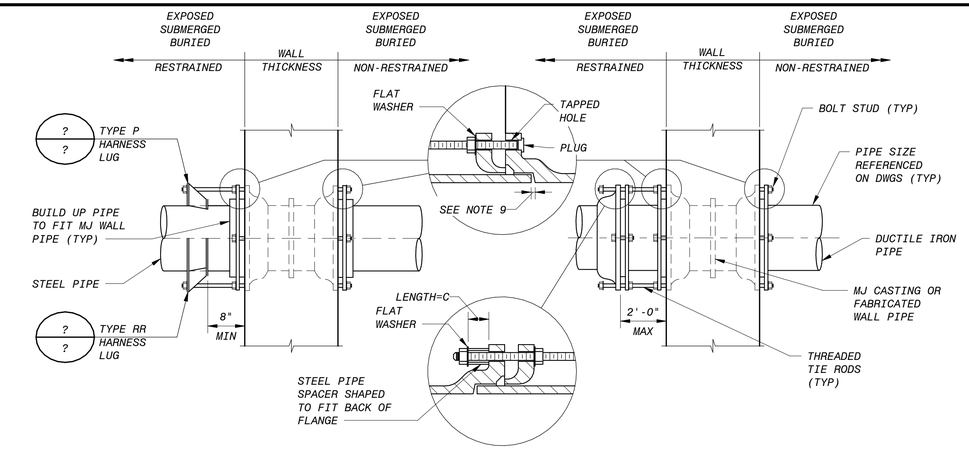

STEEL PIPE

DUCTILE IRON PIPE

NOTES :

1. MECHANICAL JOINT OR PUSH-ON STYLE FITTINGS MAY BE FURNISHED WHERE RESTRAINED JOINTS ARE NOT CALLED FOR ON THE DRAWINGS OR PIPE SCHEDULE.
2. PRESSURE SHALL BE THE PRESSURE AT WHICH THE PIPE IS HYDROSTATICALLY TESTED, OR IF THERE IS NO HYDROSTATIC FIELD TEST, IT SHALL BE THE SPECIFIED SHOP TEST PRESSURE.
3. UNLESS OTHERWISE INDICATED, TIE RODS SHALL BE SPACED UNIFORMLY AROUND THE PIPE, BEGINNING WITH THE FIRST TWO AT THE HORIZONTAL CENTERLINE OF THE PIPE, SUBJECT TO THE APPROVAL OF THE ENGINEER.
4. EXCEPT WHERE TIE RODS ARE REQUIRED, BOLTS FOR FOLLOWER RINGS SHALL BE BOLT-STUDS ON WALL PIPE. ALL BOLT HOLES IN WALL PIPE SHALL BE TAPPED. WALL PIPES SHALL BE ORIENTED SO THAT THE BOLT HOLES STRADDLE THE TOP CENTERLINE.
5. AT CONTRACTOR'S OPTION, 4" THROUGH 48" MAY BE FURNISHED AS MECHANICAL JOINT STYLE WITH TIE RODS, OR POSITIVE LOCKING SEGMENTS AND/OR RINGS SUCH AS AMERICAN JOINT STYLE PIPE 14" THROUGH 36" SIZE MAY BE FURNISHED AS FLEX RING STYLE RESTRAINED JOINTS AND 42" THROUGH 64" SIZE MAY BE FURNISHED AS LOC RING STYLE RESTRAINED JOINTS, OR U.S. PIPE "TR-FLEX", OR GRIFFIN PIPE "SNAP-LOCK".
6. FOR BURIED PIPING, CONTRACTOR SHALL PROVIDE AN ADDITIONAL FIELD JOINT AS CLOSE AS PRACTICAL TO FACE OF WALL, BUT NO MORE THAN 5 FEET.
7. USE WAX TAPE TO PROTECT ALL BURIED FERROUS SURFACES, INCLUDING PAINTED SURFACES. SEE SPECIFICATIONS.
8. WHERE PIPE IS REQUIRED ON ONE SIDE ONLY, PROVIDE MJxPE WALL PIPE.
9. FOR PIPING FLEXIBILITY, PROVIDE GAP LARGE ENOUGH TO FACILITATE PIPE ASSEMBLY AND DISASSEMBLY AT ASSOCIATED FLANGE PIPE JOINTS.

MECHANICAL JOINT TIE ROD SCHEDULE

NOMINAL PIPE SIZE (INCHES)	MAX PRESSURE (PSI) (NOTE 2)	TIE BOLTS		PIPE SPACERS		
		NO. OF RODS (NOTE 3)	DIA OF RODS (INCHES)	DIA (INCHES)	LENGTH (INCHES)	PIPE SCHEDULE
4	350 OR LESS	2	3/4	1	2 1/2	40
6	250 OR LESS 350	2 4	3/4	1	2 1/2	40
8	150 OR LESS 300 350	2 4 6	3/4	1	2 1/2	40
10	200 OR LESS 350	2 4	3/4	1	2 1/2	80
12	150 OR LESS 300 350	2 4 6	3/4	1	2 1/2	80
14	100 OR LESS 200 350	2 4 6	3/4	1	3 1/2	80
16	150 OR LESS 250 350	4 6 8	3/4	1	3 1/2	80
18	150 OR LESS 200 300 350	4 6 8 10	3/4	1	3 1/2	80
20	100 OR LESS 150 200 300 350	4 6 8 10 12	3/4	1	3 1/2	80
24	100 OR LESS 150 200 250 300 350	6 8 10 12 14 16	3/4	1	3 1/2	80
30	100 OR LESS 150 200 250	8 10 12 16	1	1 1/4	4	80
36	100 OR LESS 150 200 250	8 12 18 22	1	1 1/4	4	80
42	100 OR LESS 150 200 250	8 12 16 20	1 1/4	1 1/2	4	80
48	100 OR LESS 150 200 250	12 16 22 28	1 1/4	1 1/2	4	80

C MECHANICAL JOINT WALL PIPE WITH TIE RODS
NO SCALE

NO.	BY	CHK	APP	DATE	REVISIONS AND RECORD OF USE
0	KEZ	RHF	EVB	5/19/2020	ISSUED FOR CONSTRUCTION

REGISTERED PROFESSIONAL ENGINEER
RICK V. BEVINGTON
No. C 78836
CIVIL
STATE OF CALIFORNIA
5/20/2020

BLACK & VEATCH JOINT VENTURE
BLACK & VEATCH
FILANC

CITY OF MORRO BAY
MORRO BAY WATER RECLAMATION FACILITY (WRF)

GENERAL
CIVIL-MECHANICAL
DETAILS

DESIGNED: KEZ
DETAILED: MAK
CHECKED: EVB
APPROVED: EVB
DATE: 5/19/2020

0 1/2 1
IF THIS BAR DOES NOT MEASURE 1" THEN DRAWING IS NOT TO FULL SCALE

PROJECT NO.
400530

00-M-502
SHEET
21 OF 412

PLOTTED: 5/14/2020 4:00:11 PM
D400530

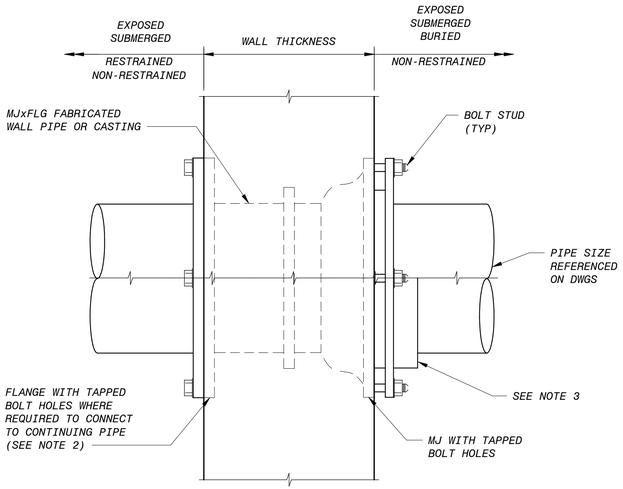

NOTES :

1. WALL PIPE SHALL BE ORIENTED SO THAT THE BOLT HOLES STRADDLE THE TOP CENTERLINE.
2. WHERE PIPE IS REQUIRED ON ONE SIDE ONLY, PROVIDE MJxPE WALL PIPE.
3. FOR STEEL PIPE APPLICATIONS BUILD UP END OF STEEL PIPE TO FIT MJ WALL PIPE.
4. FOR BURIED PIPING, CONTRACTOR SHALL PROVIDE AN ADDITIONAL FIELD JOINT AS CLOSE AS PRACTICAL TO FACE OF WALL, BUT NO MORE THAN 5 FEET.
5. USE WAX TAPE TO PROTECT ALL BURIED FERROUS SURFACES, INCLUDING PAINTED SURFACES. SEE SPECIFICATIONS.

A FLANGED-MECHANICAL JOINT WALL PIPE
NO SCALE

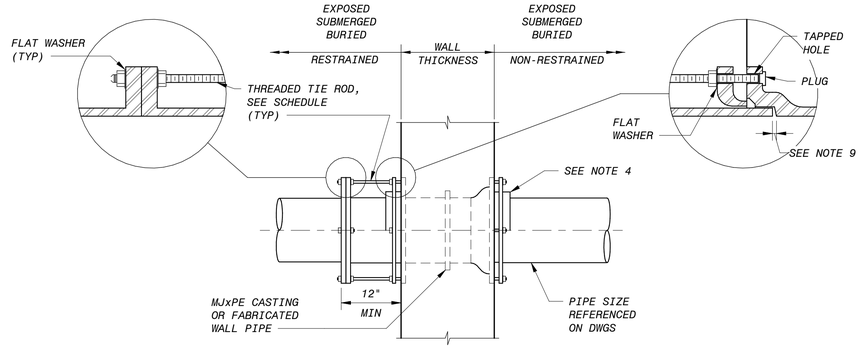

TIE ROD SCHEDULE			
NOMINAL PIPE SIZE (INCHES)	MAX PRESSURE (PSI) (NOTE 1)	TIE BOLTS	
		NO. OF RODS (NOTE 2)	DIA OF RODS (INCHES)
6	250 OR LESS	2	3/4
8	150 OR LESS	2	3/4
10	200 OR LESS 350	2 6	3/4
12	150 OR LESS 300	2 4	3/4
14	100 OR LESS 200	2 4	3/4
16	75 OR LESS 150	2 4	3/4
18	75 OR LESS 150	2 4	3/4
20	50 OR LESS	2	3/4
24	75	4	3/4
30	50 OR LESS	4	1
36	50 OR LESS 100	4 8	1
42	50 OR LESS	4	1 1/4

NOTES :

1. PRESSURE SHALL BE THE PRESSURE AT WHICH THE PIPE IS HYDROSTATICALLY TESTED, OR IF THERE IS NO HYDROSTATIC FIELD TEST, IT SHALL BE THE SPECIFIED SHOP TEST PRESSURE.
2. UNLESS OTHERWISE INDICATED, TIE RODS SHALL BE SPACED UNIFORMLY AROUND THE PIPE, BEGINNING WITH THE FIRST TWO AT THE HORIZONTAL CENTERLINE OF THE PIPE, SUBJECT TO THE APPROVAL OF THE ENGINEER.
3. EXCEPT WHERE TIE RODS ARE REQUIRED, BOLTS FOR FOLLOWER RINGS SHALL BE BOLT-STUDS ON WALL PIPE. ALL BOLT HOLES IN WALL PIPE SHALL BE TAPPED. WALL PIPES SHALL BE ORIENTED SO THAT THE BOLT HOLES STRADDLE THE TOP CENTERLINE.
4. FOR STEEL PIPE APPLICATIONS, BUILD UP END OF STEEL PIPE TO FIT MJ WALL PIPE.
6. FOR BURIED PIPING, CONTRACTOR SHALL PROVIDE AN ADDITIONAL FIELD JOINT AS CLOSE AS PRACTICAL TO FACE OF WALL, BUT NO MORE THAN 5 FEET.
7. USE WAX TAPE TO PROTECT ALL BURIED FERROUS SURFACES, INCLUDING PAINTED SURFACES. SEE SPECIFICATIONS.
8. WHERE PIPE IS REQUIRED ON ONE SIDE ONLY, PROVIDE MJxPE WALL PIPE.
9. FOR PIPING FLEXIBILITY, PROVIDE GAP LARGE ENOUGH TO FACILITATE PIPE ASSEMBLY AND DISASSEMBLY AT ASSOCIATED FLANGE PIPE JOINTS.

B FLANGED - MECHANICAL JOINT WALL PIPE WITH TIE RODS
NO SCALE

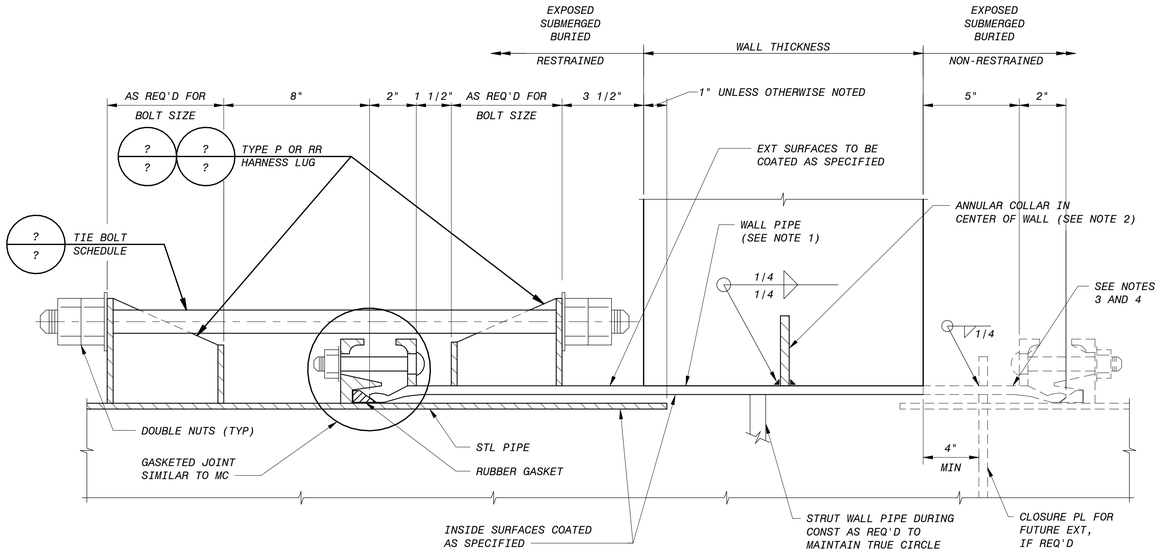

NOTES :

1. WALL PIPE TO BE FABRICATED OF 3/8" MINIMUM STEEL WITH COATINGS SAME AS CONNECTING PIPE, OR 304L SS, OR OTHER MATERIAL AS SPECIFIED OR INDICATED ON DRAWINGS. IF CONNECTING STEEL PIPE THICKNESS IS GREATER THAN 3/8", WALL PIPE THICKNESS SHALL BE INCREASED TO MATCH CONNECTING PIPE.
2. ANNULAR COLLAR SHALL BE SAME MATERIAL AS PIPE, 1/4" x 2" FOR PIPE 20" AND SMALLER, AND 3/8" X 3" FOR PIPE LARGER THAN 20".
3. WALL PIPE MAY BE FLUSH WITH FACE OF WALL, EXTENDED WITH CLOSURE PLATE FOR FUTURE EXTENSION, EXTENDED WITH NON-RESTRAINED GASKETED JOINT, OR RESTRAINED GASKETED JOINTS MAY BE USED ON BOTH SIDES OF THE WALL, AS INDICATED ON THE DRAWINGS.
6. FOR BURIED PIPING WITH NON-RESTRAINED JOINTS, CONTRACTOR TO PROVIDE AN ADDITIONAL FIELD JOINT AS CLOSE AS PRACTICAL TO FACE OF WALL, BUT NOT CLOSER THAN 5 FEET.
7. USE WAX TAPE TO PROTECT ALL BURIED FERROUS SURFACES, INCLUDING PAINTED SURFACES. SEE SPECIFICATIONS.

C HARNESSED WALL PIPE FOR STEEL PIPE
NO SCALE

NO.	BY	CHK	APP	DATE	REVISIONS AND RECORD OF USE
0	KEZ	RHF	EVB	5/19/2020	ISSUED FOR CONSTRUCTION

REGISTERED PROFESSIONAL ENGINEER
ERICK V. BEVINGTON
No. C 78836
CIVIL
STATE OF CALIFORNIA
5/20/2020

BLACK & VEATCH JOINT VENTURE
BLACK & VEATCH
FILANC

CITY OF MORRO BAY
MORRO BAY WATER RECLAMATION FACILITY (WRF)

GENERAL
CIVIL-MECHANICAL DETAILS

DESIGNED: KEZ
DETAILED: MAK
CHECKED: EVB
APPROVED: EVB
DATE: 5/19/2020

0 1/2 1
IF THIS BAR DOES NOT MEASURE 1" THEN DRAWING IS NOT TO FULL SCALE

PROJECT NO.
400530

00-M-503
SHEET
22 OF 412

PLOTTED: 5/14/2020 4:00:12 PM
D400530

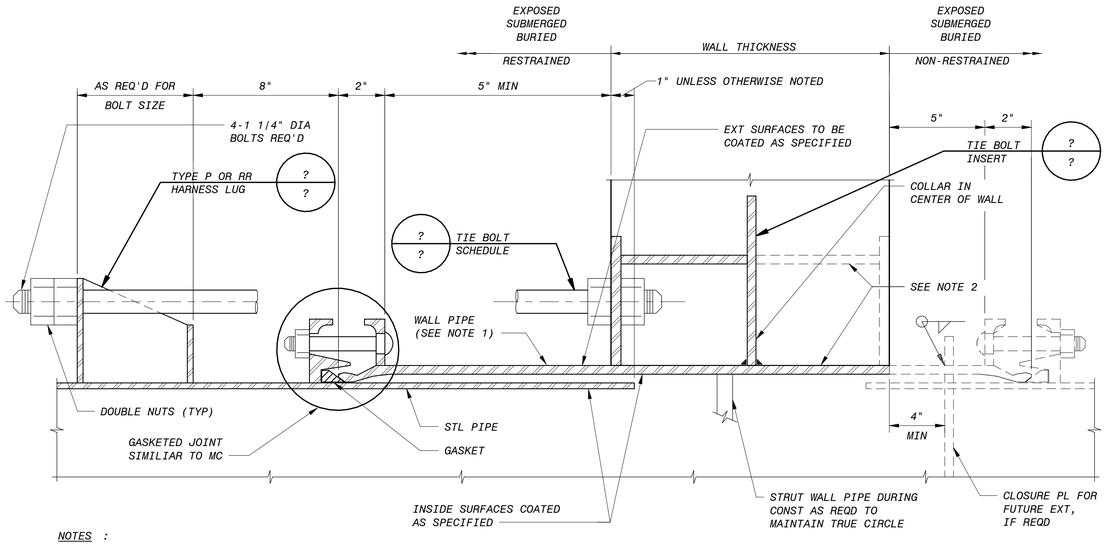

NOTES :

1. WALL PIPE TO BE FABRICATED OF 3/8" MINIMUM STEEL WITH COATINGS SAME AS CONNECTING PIPE, OR 304L SS, OR OTHER MATERIAL AS SPECIFIED OR INDICATED ON DRAWINGS. IF CONNECTING STEEL PIPE THICKNESSS IS GREATER THAN 3/8", WALL PIPE THICKNESS SHALL BE INCREASED TO MATCH CONNECTING PIPE.

2. WALL PIPE MAY BE FLUSH WITH FACE OF WALL, EXTENDED WITH CLOSURE PLATE FOR FUTURE EXTENSION, EXTENDED WITH NON-RESTRAINED GASKETED JOINT, OR RESTRAINED GASKETED JOINTS MAY BE USED ON BOTH SIDES OF THE WALL, AS INDICATED ON THE DRAWINGS.

3. FOR BURIED PIPING WITH NON-RESTRAINED JOINTS, CONTRACTOR TO PROVIDE AN ADDITIONAL FIELD JOINT AS CLOSE AS PRACTICAL TO FACE OF WALL, BUT NOT CLOSER THAN 5 FEET.

4. USE WAX TAPE TO PROTECT ALL BURIED FERROUS SURFACES, INCLUDING PAINTED SURFACES. SEE SPECIFICATIONS.

A HARNESSED WALL PIPE FOR STEEL PIPE

NO SCALE

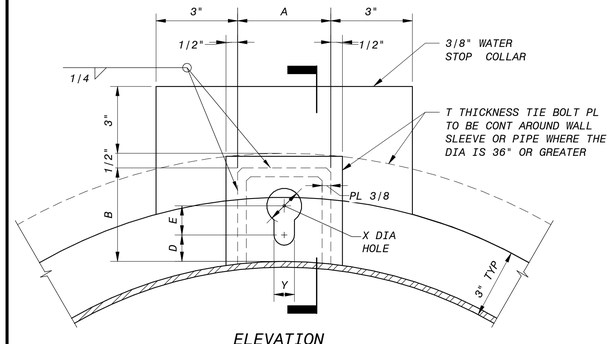

ELEVATION

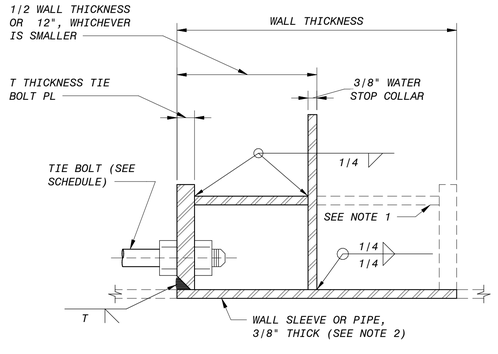

SECTION

TIE BOLT SCHEDULE (INCHES)							
TIE BOLT DIAMETER	A	B	D	E	X	Y	T
5/8	4	5	*	1	1 3/8	3/4	3/8
3/4	4	5	*	1 1/4	1 1/2	7/8	3/8
7/8	4 1/2	5 1/2	*	1 1/2	1 3/4	1	1/2
1	5	6	*	1 3/4	2	1 1/8	1/2
1 1/8	5	6 1/2	*	1 3/4	2 1/4	1 1/4	1/2
1 1/4	5	7	*	2	2 3/8	1 3/8	5/8
1 3/8	5 1/2	7	*	2 1/4	2 3/4	1 1/2	5/8
1 1/2	5 1/2	7 1/2	*	2 1/2	3	1 5/8	3/4
1 5/8	6	7 1/2	*	2 1/2	3 1/4	1 3/4	3/4
1 3/4	6	8	*	2 3/4	3 3/8	1 7/8	7/8
1 7/8	6 1/2	8 1/2	*	3	3 3/4	2	7/8
2	6 1/2	9	*	3 1/4	4	2 1/8	1
2 1/4	6 1/2	9 1/2	*	3 1/2	4 1/4	2 3/8	1

* D = COUPLING FOLLOWER RING HEIGHT PLUS ONE-HALF BOLT DIA PLUS 1/8".

NOTES :

1. TIE BOLT INSERT MAY BE ON EITHER OR BOTH WALL FACES AS INDICATED ON DRAWINGS.

2. IF CONNECTING STEEL PIPE THICKNESS IS GREATER THAN 3/8" AND WALL SLEEVE OR PIPE IS EXTENDED BEYOND THE FACE OF THE WALL, WALL SLEEVE OR PIPE THICKNESS SHALL BE INCREASED TO MATCH CONNECTING PIPE.

C TIE BOLT INSERT

NO SCALE

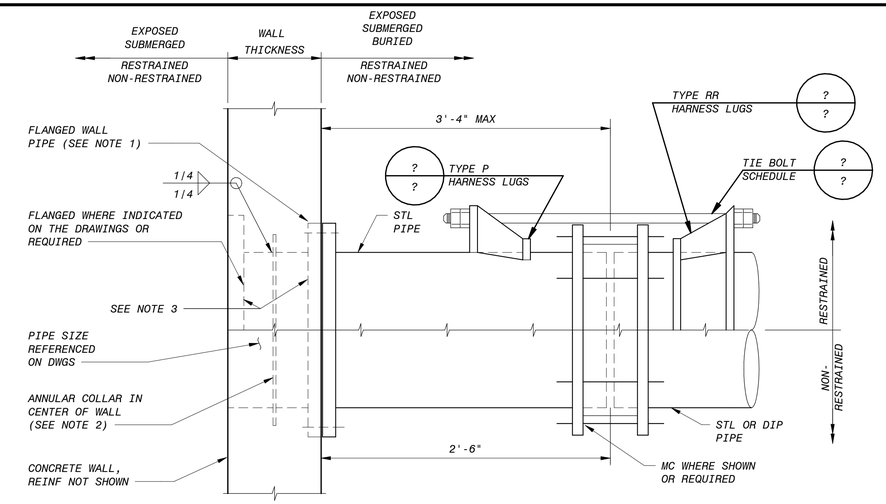

NOTES :

1. WALL PIPE MATERIAL SHALL BE DUCTILE IRON, STEEL, OR AS INDICATED ON THE DRAWINGS. STEEL WALL PIPE SHALL BE SCHEDULE 40 FOR PIPE 20" AND SMALLER, 3/8" FOR PIPE LARGER THAN 20", AND HOT DIP GALVANIZED AFTER FABRICATION.
2. ANNULAR COLLAR SHALL BE SAME MATERIAL AS PIPE, 1/4" X 2" FOR PIPE 20" AND SMALLER, AND 3/8" X 3" FOR PIPE LARGER THAN 20"
3. ALL FLANGE BOLT HOLES IN WALL PIPE SHALL BE DRILLED AND TAPPED.
4. WALL PIPE SHALL BE ORIENTATED SO THAT THE BOLT HOLES STRADDLE THE TOP CENTERLINE.
5. USE WAX TAPE TO PROTECT ALL BURIED FERROUS SURFACES, INCLUDING PAINTED SURFACES. SEE SPECIFICATIONS.

B MECHANICAL COUPLING WALL PIPE FOR STEEL PIPE

NO SCALE

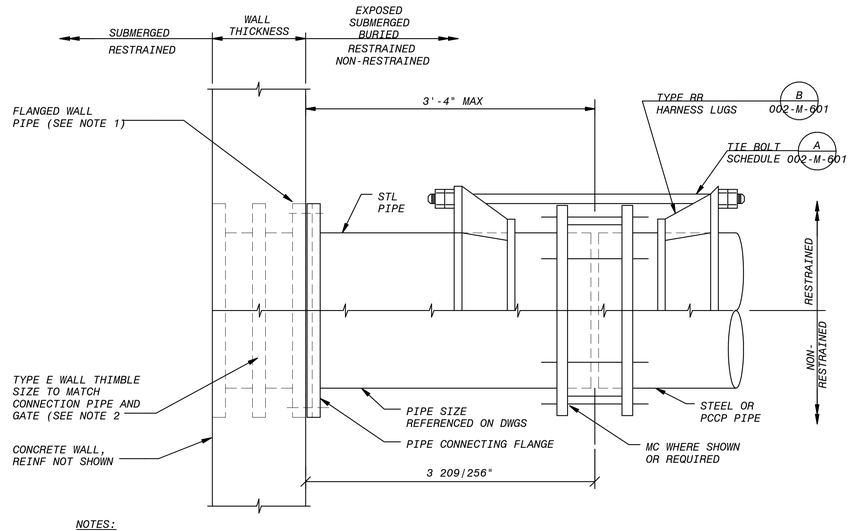

NOTES:

1. USE WAX TAPE TO PROTECT ALL BURIED FERROUS SURFACES, INCLUDING PAINTED SURFACES. SEE SPECIFICATIONS.
2. TYPE E WALL THIMBLE WITH CIRCULAR PIPE CONNECTING FLANGE AND CIRCULAR OR SQUARE GATE MOUNTING FLANGE TO MATCH GATE SHOWN ON DRAWINGS OR SPECIFIED. DRILL AND TAP PIPE CONNECTING FLANGE TO MATCH PIPE AND GATE MOUNTING FLANGE TO MATCH GATE FRAME.
3. SIMILAR FOR DUCTILE IRON PIPE. USE A COUPLING GLAND STYLE JOINT RESTRAINT IN LIEU OF HARNESS LUG.

D 003-234 - STEEL OR DIP CONNECTION AT SLIDE GATE

NO SCALE

NO.	BY	CHK	APP	DATE	REVISIONS AND RECORD OF USE
0	KEZ	RHF	EVB	5/19/2020	ISSUED FOR CONSTRUCTION

REGISTERED PROFESSIONAL ENGINEER
ERICK V. BEVINGTON
No. C 78836
CIVIL
STATE OF CALIFORNIA
5/20/2020

BLACK & VEATCH
JOINT VENTURE
FILANC
BLACK & VEATCH

CITY OF MORRO BAY
MORRO BAY WATER
RECLAMATION FACILITY (WRF)

GENERAL
CIVIL - MECHANICAL
DETAILS

DESIGNED: KEZ
DETAILED: MAK
CHECKED: EVB
APPROVED: EVB
DATE: 5/19/2020

0 1/2 1
IF THIS BAR DOES NOT MEASURE 1" THEN DRAWING IS NOT TO FULL SCALE

PROJECT NO.
400530

00-M-504
SHEET
23 OF 412

PLOTTED: 5/14/2020 4:00:14 PM
D400530

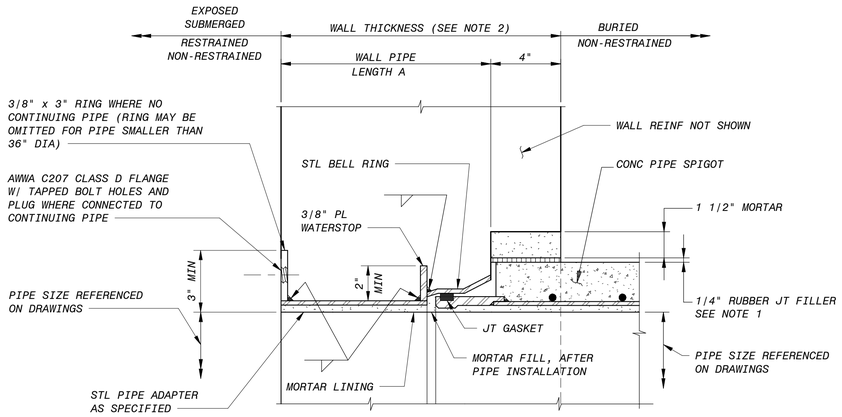

NOTES :

1. JOINT FILLER TO BE NATURAL OR SYNTHETIC RUBBER JT FILLER 1/4" THICK x 4" WIDE, CONTINUOUSLY AROUND PIPE, WITH A HARDNESS OF 40 WHEN MEASURED BY ASTM D 2240, TYPE A DUROMETER.
2. WHERE CONCRETE WALL THICKNESS IS LESS THAN MINIMUM THICKNESS INDICATED, THE WALL SHALL BE THICKENED BY CONSTRUCTING A REINFORCED CONCRETE COLLAR AROUND THE PIPE AS INDICATED ON THE DRAWINGS. THE COLLAR SHALL BE CAST WITH THE WALL AND SHALL HAVE A MINIMUM SQUARE DIMENSION OF PIPE O.D. PLUS 2'.
3. CONCRETE PIPE SHALL BE RCP, PCCP, LHCP OR CBCP PIPE AS INDICATED ON DRAWINGS OR SPECIFIED.

MINIMUM WALL PIPE LENGTH	
PIPE DIA	A
16"-36"	8"
42"-54"	9"
60"-84"	10"
90"-144"	12"

A RUBBER AND STEEL JOINT CONCRETE WALL PIPE

NO SCALE

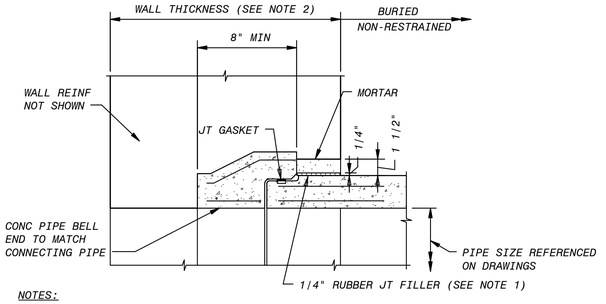

NOTES:

1. JOINT FILLER TO BE NATURAL OR SYNTHETIC RUBBER JOINT FILLER 1/4" THICK x 4" WIDE, CONTINUOUSLY AROUND PIPE, WITH A HARDNESS OF 40 WHEN MEASURED BY ASTM D 2240, TYPE A DUROMETER.
2. WHERE CONCRETE WALL THICKNESS IS LESS THAN MINIMUM THICKNESS INDICATED, THE WALL SHALL BE THICKENED BY CONSTRUCTING A REINFORCED CONCRETE COLLAR AROUND THE PIPE AS INDICATED ON THE DRAWINGS. THE COLLAR SHALL BE CAST WITH THE WALL AND SHALL HAVE A MINIMUM SQUARE DIMENSION OF PIPE O.D. + 2'.
3. CONCRETE PIPE SHALL BE RCP OR LHCP PIPE AS INDICATED ON DRAWING OR SPECIFIED.

B 003-241 - RUBBER AND CONCRETE JOINT CONCRETE WALL PIPE

NO SCALE

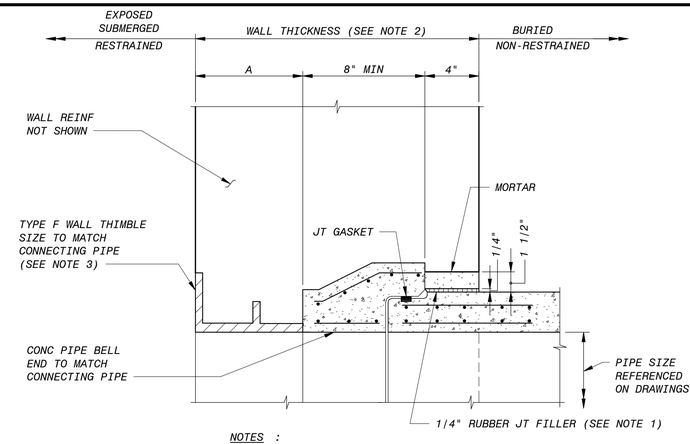

NOTES :

1. JOINT FILLER TO BE NATURAL OR SYNTHETIC RUBBER JT FILLER 1/4" THICK x 4" WIDE, CONTINUOUSLY AROUND PIPE, WITH A HARDNESS OF 40 WHEN MEASURED BY ASTM D 2240, TYPE A DUROMETER.
2. WHERE CONCRETE WALL THICKNESS IS LESS THAN MINIMUM THICKNESS INDICATED, THE WALL SHALL BE THICKENED BY CONSTRUCTING A REINFORCED CONCRETE COLLAR AROUND THE PIPE AS INDICATED ON THE DRAWINGS. THE COLLAR SHALL BE CAST WITH THE WALL AND SHALL HAVE A MINIMUM SQUARE DIMENSION OF PIPE O.D. PLUS 2'.
3. CIRCULAR TYPE F WALL THIMBLE WITH CIRCULAR OR SQUARE GATE MOUNTING FLANGE TO MATCH GATE SHOWN ON DRAWINGS OR SPECIFIED. DRILL AND TAP GATE MOUNTING FLANGE TO MATCH GATE FRAME.
4. CONCRETE PIPE SHALL BE RCP OR LHCP PIPE AS INDICATED ON DRAWINGS OR SPECIFIED.

MINIMUM GATE WALL THIMBLE LENGTH	
PIPE DIA	A
24"-60"	8"
66"-96"	10"

C RUBBER AND CONCRETE JOINT CONCRETE WALL PIPE AT SLUICE GATE

NO SCALE

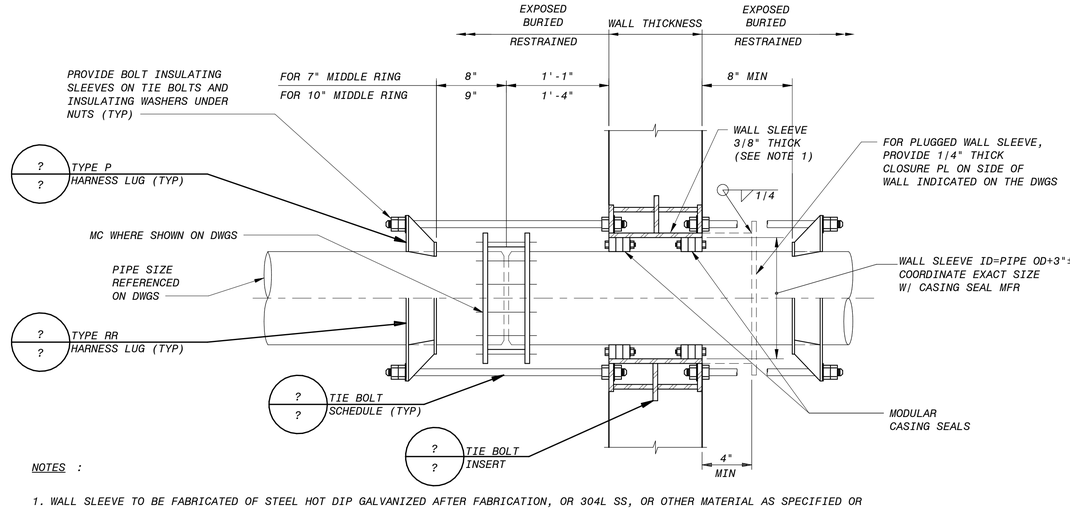

NOTES :

1. WALL SLEEVE TO BE FABRICATED OF STEEL HOT DIP GALVANIZED AFTER FABRICATION, OR 304L SS, OR OTHER MATERIAL AS SPECIFIED OR INDICATED ON DRAWINGS.
5. FOR BURIED PIPING, CONTRACTOR SHALL PROVIDE AN ADDITIONAL FIELD JOINT AS CLOSE AS PRACTICAL TO FACE OF WALL, BUT NO MORE THAN 5 FEET.
6. USE WAX TAPE TO PROTECT ALL BURIED FERROUS SURFACES INCLUDING PAINTED SURFACES. SEE SPECIFICATIONS.

E HARNESSED WALL SLEEVE FOR STEEL PIPE

NO SCALE

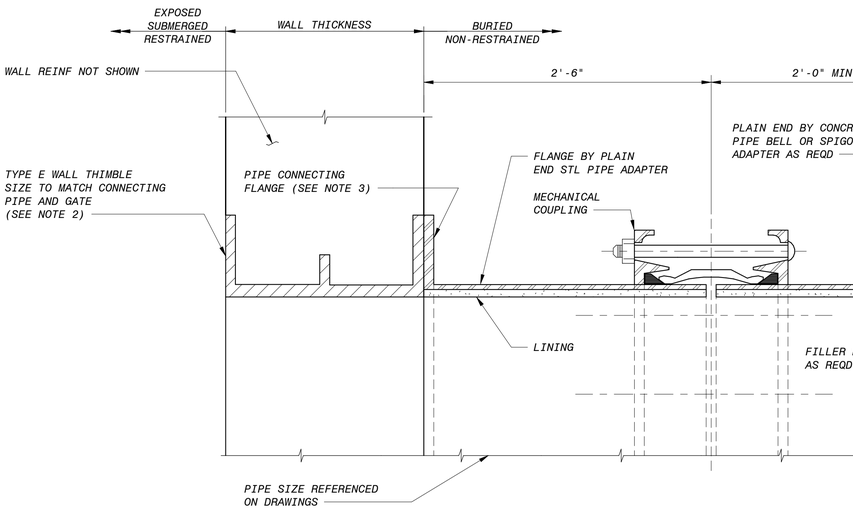

NOTES :

1. USE WAX TAPE TO PROTECT ALL BURIED FERROUS SURFACES, INCLUDING PAINTED SURFACES. FOR PROTECTION OF MECHANICAL COUPLINGS AND ADJACENT PIPE BARREL SURFACES, SHRINK WRAP MAY BE USED IN LIEU OF WAX TAPE. SEE SPECIFICATIONS.
2. TYPE E WALL THIMBLE WITH CIRCULAR PIPE CONNECTING FLANGE AND CIRCULAR OR SQUARE GATE MOUNTING FLANGE TO MATCH GATE SHOWN ON DRAWINGS OR AS SPECIFIED. DRILL AND TAP PIPE CONNECTING FLANGE TO MATCH PIPE AND GATE MOUNTING FLANGE TO MATCH GATE FRAME.
3. CONCRETE PIPE SHALL BE RCP, PCCP, LHCP, OR CBCP PIPE AS INDICATED ON DRAWINGS OR AS SPECIFIED.

D RUBBER AND STEEL JOINT CONCRETE WALL PIPE AT CAST-IRON SLIDE GATE

NO SCALE

NO.	BY	CHK	APP	DATE	REVISIONS AND RECORD OF USE
0	KEZ	RHF	EVB	5/19/2020	ISSUED FOR CONSTRUCTION

REGISTERED PROFESSIONAL ENGINEER — ERICK V. BEVINGTON — No. C 78836 — CIVIL — STATE OF CALIFORNIA — 5/20/2020

BLACK & VEATCH / RJ / JOINT VENTURE / BLACK & VEATCH / FILANC

CITY OF MORRO BAY
MORRO BAY WATER RECLAMATION FACILITY (WRF)

GENERAL
CIVIL - MECHANICAL
DETAILS

DESIGNED: KEZ
DETAILED: MAK
CHECKED: EVB
APPROVED: EVB
DATE: 5/19/2020

0 1/2 1
IF THIS BAR DOES NOT MEASURE 1" THEN DRAWING IS NOT TO FULL SCALE

PROJECT NO. 400530

00-M-505
SHEET 24 OF 412

PLOTTED: 5/14/2020 4:00:16 PM
D400530

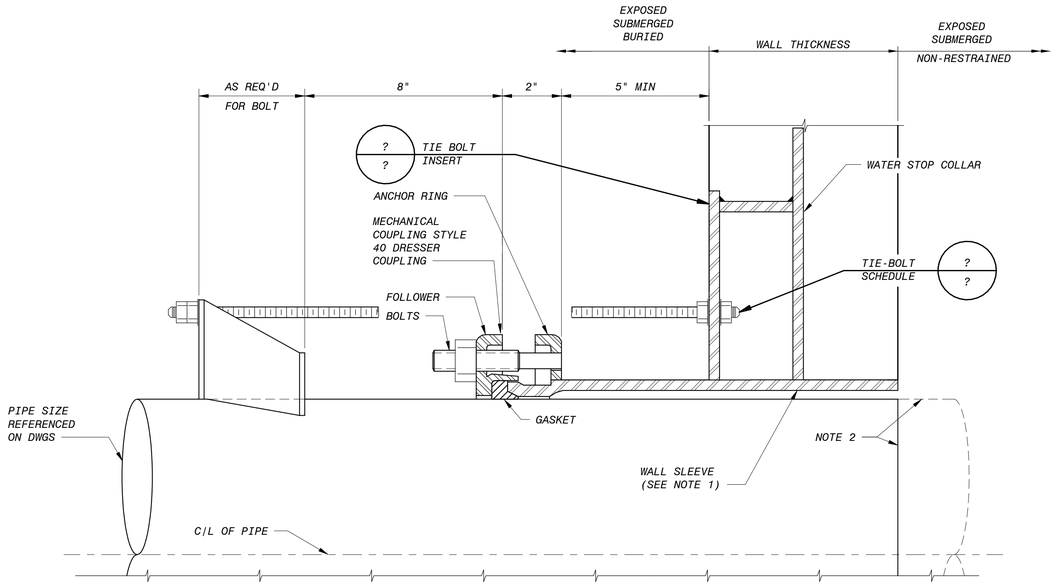

NOTES :

1. WALL SLEEVE TO BE FABRICATED OF 3/8" MINIMUM STEEL HOT DIP GALVANIZED AFTER FABRICATION, 304 SS, OR OTHER MATERIAL AS SPECIFIED OR INDICATED ON DRAWINGS.
2. PIPING MAY BE FLUSH WITH THE FACE OF THE WALL, OR EXTENDING FROM THE WALL WITH END AS REQUIRED OR INDICATED ON THE DRAWINGS.
3. USE WAX TAPE TO PROTECT ALL BURIED FERROUS SURFACES INCLUDING PAINTED SURFACES. SEE SPECIFICATIONS.

A HARNESSED STEEL PIPE WALL SLEEVE

NO SCALE

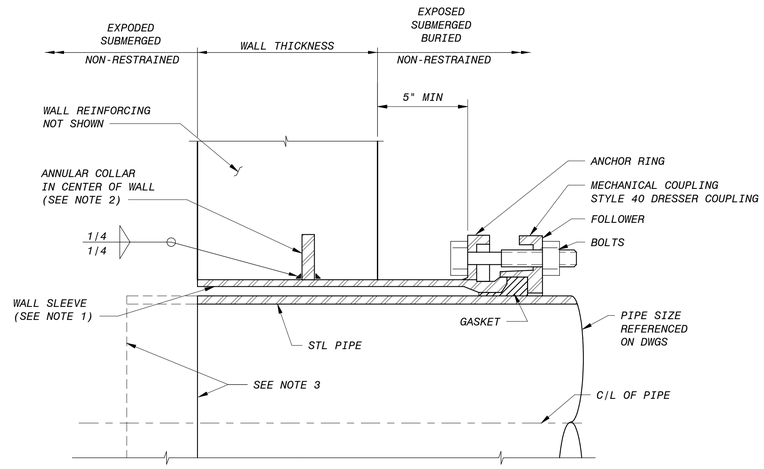

NOTES :

1. WALL SLEEVE TO BE FABRICATED OF 3/8" MIN STEEL HOT DIP GALVANIZED AFTER FABRICATION, 304 SS, OR OTHER MATERIAL AS SPECIFIED OR INDICATED ON DRAWINGS.
2. ANNULAR COLLAR SHALL BE SAME MATERIAL AS PIPE 1/4" X 2" FOR PIPE 20" AND SMALLER, AND 3/8" X 3" FOR PIPE LARGER THAN 20".
3. PIPING MAY BE FLUSH WITH THE FACE OF THE WALL OR EXTENDING FROM THE WALL WITH END AS REQUIRED OR INDICATED ON THE DRAWINGS.
6. FOR BURIED PIPING, CONTRACTOR SHALL PROVIDE AN ADDITIONAL FIELD JOINT AS CLOSE AS PRACTICAL TO FACE OF WALL, BUT NO MORE THAN 5 FEET.
7. USE WAX TAPE TO PROTECT ALL BURIED FERROUS SURFACES INCLUDING PAINTED SURFACES. SEE SPECIFICATIONS.

B NON-HARNESSED STEEL PIPE WALL SLEEVE

NO SCALE

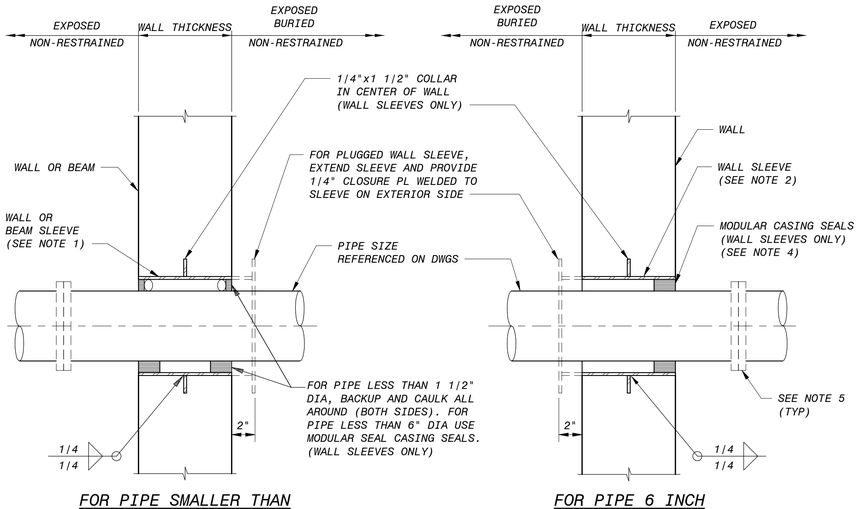

NOTES :

1. SCHEDULE 40 GALV STEEL PIPE SLEEVE. SIZE TO PROVIDE 3/4" ANNULAR SPACE AROUND PIPE FOR ALL BEAM SLEEVES AND FOR WALL SLEEVES FOR PIPES SMALLER THAN 1 1/2" DIAMETER. FOR PIPE SMALLER THAN 6" DIAMETER, COORDINATE WALL SLEEVE DIAMETER WITH MODULAR CASING SEAL MANUFACTURER.
2. WALL SLEEVE, SCHEDULE 40 STEEL PIPE FOR 12" AND SMALLER SLEEVES, 1/4" STEEL PIPE FOR SLEEVES LARGER THAN 12", AND HOT DIP GALVANIZED AFTER FABRICATION, 304 SS, OR OTHER MATERIAL AS SPECIFIED OR INDICATED ON DRAWINGS. COORDINATE WALL SLEEVE DIAMETER WITH MODULAR CASING SEAL MANUFACTURER.
3. FIRESAFING TO BE PROVIDED AT ALL RATED WALLS INDICATED ON THE DRAWINGS AND INSTALLED PER ACCEPTED UL RATED SYSTEM.
4. WHERE SOIL MAY BE PRESENT, USE TWO SETS OF CASING SEALS. ONE AT EACH FACE OF WALL.
5. TO MINIMIZE SLEEVE SIZE, PROVIDE A SCREW-ON FLANGE, GROOVED COUPLING, OR MECHANICAL COUPLING WITH ANCHOR STUDS ON ONE SIDE OF OPENING.
5. FOR BURIED PIPING, CONTRACTOR SHALL PROVIDE AN ADDITIONAL FIELD JOINT AS CLOSE AS PRACTICAL TO FACE OF WALL, BUT NO MORE THAN 5 FEET.
6. USE WAX TAPE TO PROTECT ALL BURIED FERROUS SURFACES INCLUDING PAINTED SURFACES. SEE SPECIFICATIONS.
7. FOR AERATION PIPING, MODULAR CASING SEAL SHALL HAVE A TEMPERATURE RATING OF 250 DEGREES F.

C CONCRETE WALL OR BEAM SLEEVE

NO SCALE

NO.	BY	CHK	APP	DATE	REVISIONS AND RECORD OF USE
0	KEZ	RWF	EVB	5/19/2020	ISSUED FOR CONSTRUCTION

REGISTERED PROFESSIONAL ENGINEER
ERICK V. BEVINGTON
No. C 78836
CIVIL
STATE OF CALIFORNIA
5/20/2020

BLACK & VEATCH
JOINT VENTURE
BLACK & VEATCH
FILANC

CITY OF MORRO BAY
MORRO BAY WATER
RECLAMATION FACILITY (WRF)

GENERAL
CIVIL - MECHANICAL
DETAILS

DESIGNED: KEZ
DETAILED: MAK
CHECKED: EVB
APPROVED: EVB
DATE: 5/19/2020

0 1/2 1
IF THIS BAR DOES NOT MEASURE 1" THEN DRAWING IS NOT TO FULL SCALE

PROJECT NO.
400530

00-M-506
SHEET
25 OF 412

PLOTTED: 5/14/2020 4:00:18 PM
D400530

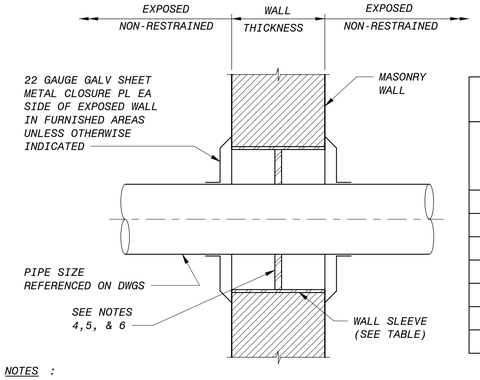

WALL SLEEVE TABLE	
PIPE SIZE	SLEEVE SIZE UNLESS OTHERWISE INDICATED (SEE NOTES 3 & 4)
1"& SMALLER	3"
1 1/4"&1 1/2"	3 1/2"
2" & 2 1/2"	4"
3"	6"
4"	6"
6"	8"
8"& LARGER	PIPE OD+2"±

NOTES :

1. SCHEDULE 40 GALV STEEL PIPE FOR PIPING SMALLER THAN 3", SCHEDULE 20 GALV STEEL PIPE FOR PIPING SMALLER THAN 6", AND GALV 1/4" MINIMUM WALL THICKNESS FOR PIPING LARGER THAN 6".
2. FOR PIPING LARGER THAN 3" PROVIDE PIPE SUPPORT WITHIN 3' OF WALL SLEEVE TO PREVENT THE TRANSFER OF PIPE LOADS TO MASONRY WALL WHEN MODULAR CASING SEALS ARE USED.
3. WHERE REQUIRED, USE SLEEVE LARGE ENOUGH FOR FLANGE OR OTHER JOINT RESTRAINT TO PASS THROUGH.
4. FOR PIPE SIZES 1 1/2" IN DIAMETER AND SMALLER, CAULK ANNULAR SPACE AROUND PIPE. FOR PIPE LARGER THAN 1 1/2" IN DIAMETER, USE MODULAR CASING SEALS AND COORDINATE SLEEVE SIZE WITH CASING SEAL MANUFACTURER.
5. PROVIDE MODULAR CASING SEALS ON ALL SLEEVES AT CHLORINE AND AMMONIA FEED AND STORAGE ROOMS AND WHERE INDICATED ON THE DRAWINGS. COORDINATE SLEEVE SIZE WITH CASING SEAL MANUFACTURER.
6. FIRESAFING TO BE PROVIDED AT ALL RATED WALLS INDICATED ON THE DRAWINGS AND INSTALLED PER ACCEPTED UL RATED SYSTEMS.

A MASONRY WALL SLEEVE
NO SCALE

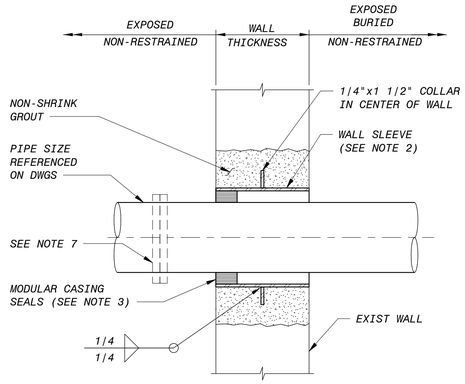

NOTES :

1. CUT OPENING FOR WALL SLEEVE, ROUGHEN EXIST CONCRETE, APPLY BONDING AGENT AND FILL WITH NON-SHRINK GROUT PER THE SPECIFICATIONS. DIAMETER OF OPENING TO BE COLLAR DIAMETER + 4".
2. WALL SLEEVE, SCHEDULE 40 STEEL PIPE FOR 12" AND SMALLER SLEEVES, 1/4" STEEL PIPE FOR SLEEVES LARGER THAN 12", AND HOT DIP GALVANIZED AFTER FABRICATION, 304 SS, OR OTHER MATERIAL AS SPECIFIED OR INDICATED ON DRAWINGS. COORDINATE SLEEVE SIZE WITH MODULAR CASING SEAL MANUFACTURER.
3. WHERE SOIL MAY BE PRESENT, USE TWO SETS OF CASING SEALS. ONE AT EACH FACE OF WALL.
4. FIRESAFING TO BE PROVIDED AT ALL RATED WALLS INDICATED ON THE DRAWINGS AND INSTALLED PER ACCEPTED UL RATED SYSTEM.
5. FOR BURIED PIPING, CONTRACTOR SHALL PROVIDE AN ADDITIONAL FIELD JOINT AS CLOSE AS PRACTICAL TO FACE OF WALL, BUT NO MORE THAN 5 FEET.
6. USE WAX TAPE TO PROTECT ALL BURIED FERROUS SURFACES INCLUDING PAINTED SURFACES. SEE SPECIFICATIONS.
7. TO MINIMIZE SLEEVE SIZE, PROVIDE A SCREW-ON FLANGE, GROOVED COUPLING, OR MECHANICAL COUPLING WITH ANCHOR STUDS ON ONE SIDE OF OPENING.

B WALL SLEEVE AT EXISTING CONCRETE WALL
NO SCALE

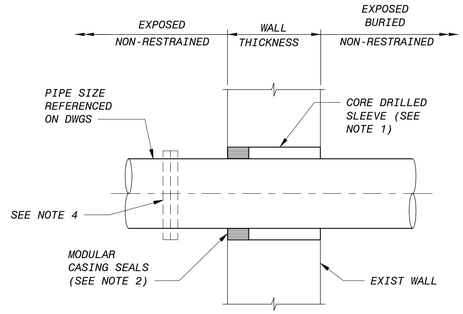

NOTES :

1. CORE DRILL SMOOTH WALL OPENING, COORDINATE CORE DIAMETER AS REQUIRED WITH CASING SEAL MANUFACTURER. MAXIMUM CORE DIAMETER SHALL BE 12".
2. WHEN SOIL MAY BE PRESENT, USE TWO SETS OF CASING SEALS. ONE AT EACH FACE OF WALL.
3. FIRESAFING TO BE PROVIDED AT ALL RATED WALLS INDICATED ON THE DRAWINGS AND INSTALLED PER ACCEPTED UL RATED SYSTEM.
4. TO MINIMIZE SLEEVE SIZE, PROVIDE A SCREW-ON FLANGE, GROOVED COUPLING, OR MECHANICAL COUPLING WITH ANCHOR STUDS ON ONE SIDE OF OPENING.
5. FOR BURIED PIPING, CONTRACTOR SHALL PROVIDE AN ADDITIONAL FIELD JOINT AS CLOSE AS PRACTICAL TO FACE OF WALL, BUT NO MORE THAN 5 FEET.
6. USE WAX TAPE TO PROTECT ALL BURIED FERROUS SURFACES INCLUDING PAINTED SURFACES. SEE SPECIFICATIONS.

C CORE DRILLED WALL SLEEVE
NO SCALE

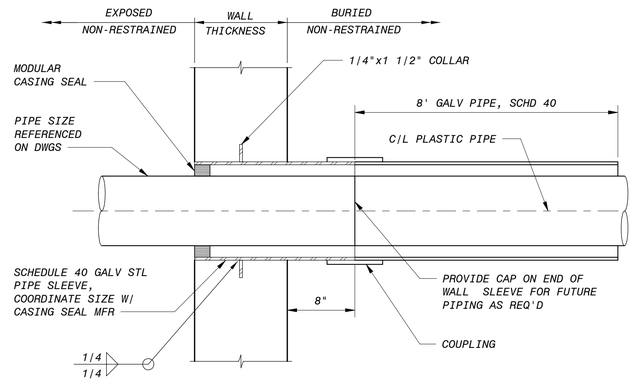

FOR PIPE DIAMETER 6 INCH AND SMALLER

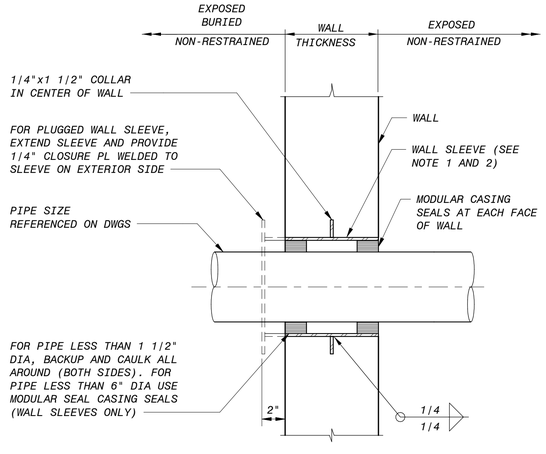

FOR PIPE DIAMETER LARGER THAN 6 INCH

NOTES :

1. WALL SLEEVE, SCHEDULE 40 STEEL PIPE FOR 12" AND SMALLER SLEEVES, 1/4" STEEL PIPE FOR SLEEVES LARGER THAN 12", AND HOT DIP GALVANIZED AFTER FABRICATION, 304 SS, OR OTHER MATERIAL AS SPECIFIED OR INDICATED ON DRAWINGS. COORDINATE WALL SLEEVE DIAMETER WITH MODULAR CASING SEAL MANUFACTURER.
2. FOR PIPE LARGER THAN 6", DIP MJ WALL SLEEVE AND PLASTIC PIPE WITH EQUIVALENT DIP OUTSIDE DIAMETER MAY NE USED AS AN ALTERNATE TO STEEL WALL SLEEVE.
3. FOR BURIED PVC PIPING, CONTRACTOR SHALL PROVIDE AN ADDITIONAL FIELD JOINT AS CLOSE AS PRACTICAL TO FACE OF WALL, BUT NOT CLOSER THAN 5 FEET.

D EXTERIOR WALL SLEEVE FOR PLASTIC PIPE
NO SCALE

NO.	BY	CHK	APP	DATE	REVISIONS AND RECORD OF USE
0	KEZ	RWF	EVB	5/19/2020	ISSUED FOR CONSTRUCTION

REGISTERED PROFESSIONAL ENGINEER
ERICK V. BEVINGTON
No. C 78836
CIVIL
STATE OF CALIFORNIA
5/20/2020

BLACK & VEATCH
JOINT VENTURE
BLACK & VEATCH
FILANC

CITY OF MORRO BAY
MORRO BAY WATER
RECLAMATION FACILITY (WRF)

GENERAL
CIVIL-MECHANICAL
DETAILS

DESIGNED: KEZ
DETAILED: MAK
CHECKED: EVB
APPROVED: EVB
DATE: 5/19/2020

0 1/2 1
IF THIS BAR DOES NOT MEASURE 1" THEN DRAWING IS NOT TO FULL SCALE

PROJECT NO.
400530

00-M-507
SHEET
26 OF 412

PLOTTED: 5/14/2020 4:00:19 PM
D400530

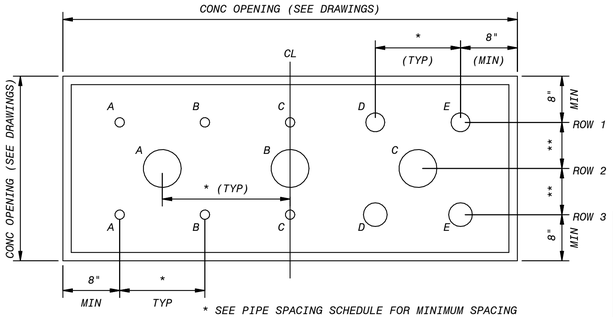

* SEE PIPE SPACING SCHEDULE FOR MINIMUM SPACING
** SPACING AS REQUIRED AND ADJUSTED FOR PIPING SIZE

ELEVATION

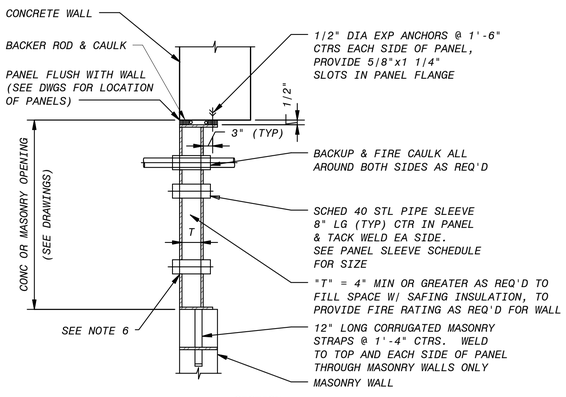

SECTION

PANEL SLEEVE SCHEDULE	
SOLUTION OR GAS LINE SIZE (INCHES)	SCHEDULE 40 NOMINAL SLEEVE SIZE (INCHES)
3/4	1 1/2
1	2
1 1/2	2 1/2
2	3
2 1/2,3	4
4	5

MINIMUM PIPE SPACING SCHEDULE

MINIMUM CENTERLINE TO CENTERLINE SPACING IN INCHES

	PIPE SIZE (INCHES)						
PIPE SIZE (INCHES)	3/4	1	1 1/2	2	2 1/2	3	4
3/4	4 1/2	4 3/4	5 1/2	6	2 3/4	6 3/4	6 3/4
1	-	5	5 1/2	6	7	7	7
1 1/2	-	-	6 1/4	6 3/4	7 1/2	7 1/2	7 1/2
2	-	-	-	7 1/4	8 1/4	8 1/4	9
2 1/2	-	-	-	-	9	9	10
3	-	-	-	-	-	9	10
4	-	-	-	-	-	-	12

PANEL PIPING SCHEDULE			
PIPE DESIGNATION		PIPE SIZE (INCHES)	PIPE SERVICE
ROW	LETTER		
1	A	-	-
1	B	-	-
1	C	-	-
1	D	-	-
1	E	-	-
2	A	-	-
2	B	-	-
2	C	-	-
3	A	-	-
3	B	-	-
3	C	-	-
3	D	-	-

NOTES :

1. SEE PANEL PIPING SCHEDULE FOR PIPING SIZE AND SERVICE.
2. WHERE LINES ARE INDICATED ON PIPING SCHEDULE TO BE FUTURE, INSTALL SLEEVES WITH THREADED ENDS OF THE SIZE AS INDICATED IN PANEL SLEEVE SCHEDULE. FILL SLEEVES WITH SAFING INSULATION AS REQUIRED AND INSTALL THREADED CAPS.
3. PIPE SPACING SHALL BE UNIFORM WITHIN THE OPENING, WITH MINIMUM SPACING AND ALLOWANCES AS INDICATED.
4. CONTRACTOR SHALL COORDINATE THE SPACING AND ALLOWANCES OF ALL PIPING AND SLEEVES PRIOR TO FABRICATION OF PANEL.
5. FIRESAFEING SHALL BE PROVIDED AT ALL RATED LOCATIONS INDICATED ON THE DRAWINGS AND INSTALLED PER ACCEPTED UL RATED SYSTEMS.
6. ALL PANEL MATERIAL, EXCEPT SLEEVES, SHALL BE 1/4" STEEL PL WELDED CONSTRUCTION. IN EXTERIOR LOCATIONS PIPE SLEEVES SHALL BE SEAL WELDED ALL AROUND.

A TYPICAL WALL SLEEVE PANEL

NO SCALE

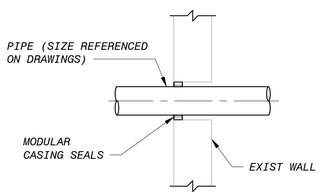

NOTE:

1. CORE DRILL SMOOTH WALL OPENING, DIAMETER AS REQUIRED FOR MODULAR CASING SEALS.

C CORE DRILLED WALL OPENING

NO SCALE

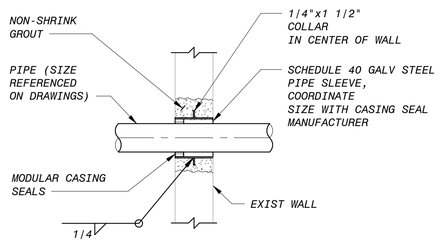

NOTE:

1. CUT OPENING FOR WALL SLEEVE,ROUGHEN EXIST CONCRETE, APPLY SIKA "SIKADUR HIMOD" BONDING AGENT AND FILL WITH NON-SHRINK GROUT PER THE SPECIFICATIONS. DIAMETER OF OPENING TO BE WATERSTOP DIAMETER + 4"

D SLEEVE AT EXISTING CONCRETE WALL

NO SCALE

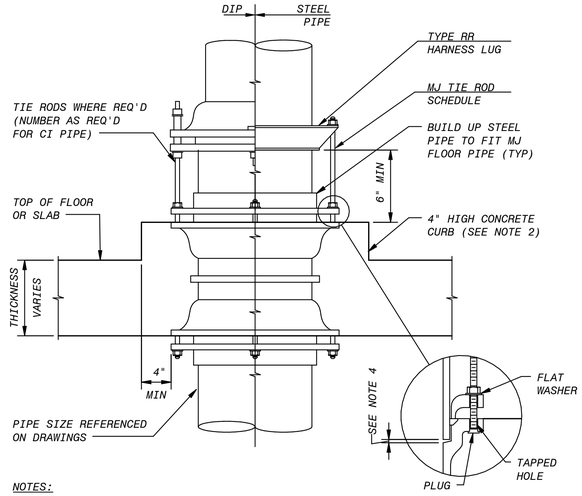

NOTES:

1. WHERE PIPE IS REQUIRED ON ONE SIDE OF THE FLOOR OR SLAB, PROVIDE A MJxPE FITTING
2. CURB MAY BE ROUND OR HEXAGONAL AT CONTRACTOR'S OPTION AND POURED SEPARATELY.
3. BOLT HOLES OF FLOOR PIPE SHALL BE ALIGNED WITH CONNECTING PIPE.
4. FOR PIPING FLEXIBILITY, PROVIDE GAP LARGE ENOUGH TO FACILITATE PIPE ASSEMBLY AND DISASSEMBLY AT ASSOCIATED FLANGE PIPE JOINTS.

B MECHANICAL JOINT FLOOR PIPE

NO SCALE

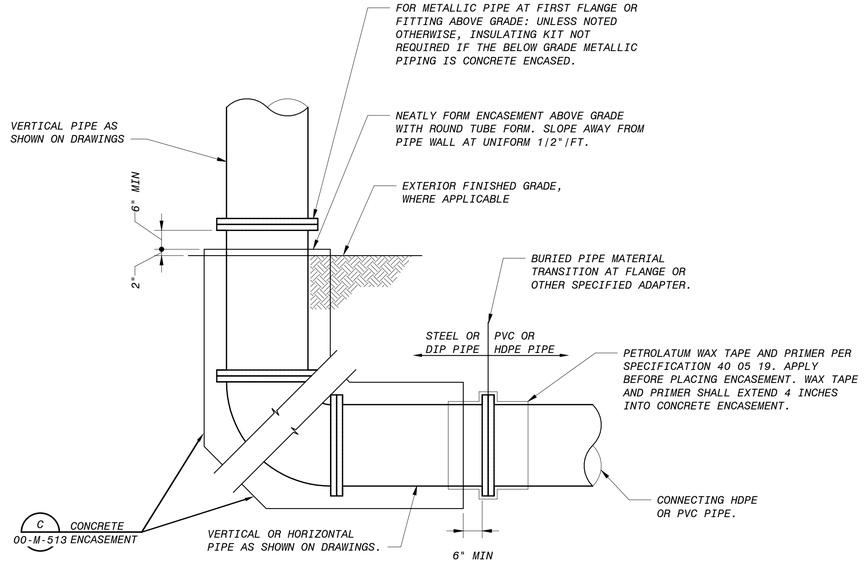

NOTES:

1. PIPING MATERIAL TRANSITIONS SHALL NOT BE LOCATED UNDER SLABS OR IN CONCRETE ENCASEMENT. PRESSURIZED PROCESS PIPING SHALL BE CONCRETE ENCASED UNDER SLABS. FOR PIPING CONNECTING TO STRUCTURES, LOCATE MATERIAL TRANSITIONS OUTSIDE OF EDGE OF STRUCTURES AND CONCRETE ENCASEMENT. ANY HARDWARE AND METALLIC PIPING SHALL BE PROTECTED FROM CORROSIVE SOIL CONTACT WITH PETROLATUM WAX TAPE AND PRIMER OR AS OTHERWISE INDICATED.

E BURIED PIPE MATERIAL TRANSITION FOR CORROSIVE SOILS

12-C-503 NO SCALE

NO.	BY	CHK	APP
0	KEZ	RHF	EVB

DATE	ISSUED FOR CONSTRUCTION
5/19/2020	REVISIONS AND RECORD OF USE

REGISTERED PROFESSIONAL ENGINEER
ERICK V. BEVINGTON
No. C 78836
CIVIL
STATE OF CALIFORNIA
5/20/2020

BLACK & VEATCH
JOINT VENTURE
FILANC

CITY OF MORRO BAY
MORRO BAY WATER
RECLAMATION FACILITY (WRF)

GENERAL
CIVIL-MECHANICAL
DETAILS

DESIGNED: KEZ
DETAILED: MAK
CHECKED: EVB
APPROVED: EVB
DATE: 5/19/2020

0 1/2 1
IF THIS BAR DOES NOT MEASURE 1" THEN DRAWING IS NOT TO FULL SCALE

PROJECT NO.
400530

00-M-508
SHEET
27 OF 412

PLOTTED: 5/14/2020 4:00:22 PM
D400530

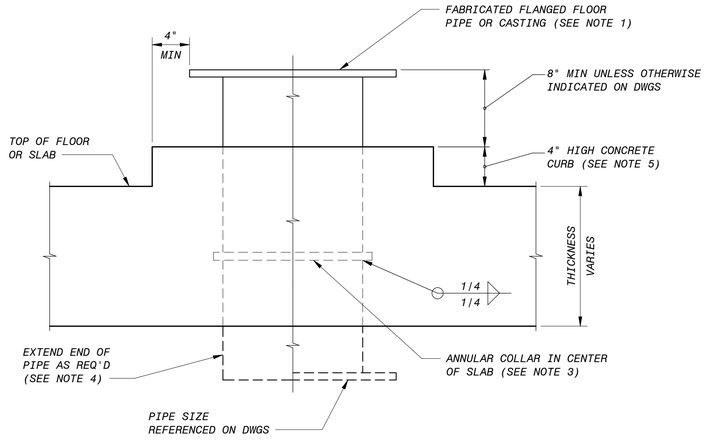

NOTES :

1. FLOOR PIPE MATERIAL SHALL BE DUCTILE IRON, STEEL, OR AS INDICATED ON DRAWINGS. STEEL PIPE SHALL BE SCHEDULE 40 FOR PIPE 20" AND SMALLER, 3/8" FOR PIPE LARGER THAN 20", AND COATINGS SAME AS CONNECTING PIPE.
2. IF CONNECTING STEEL PIPE THICKNESS IS GREATER THAN 3/8", STEEL FLOOR PIPE THICKNESS SHALL BE INCREASED TO MATCH CONNECTING PIPE.
3. ANNULAR COLLAR SHALL BE SAME MATERIAL AS PIPE AND SHALL BE 1/4"x2" FOR PIPE 20" AND SMALLER, AND 3/8"x3" FOR PIPE LARGER THAN 20".
4. FLOOR PIPE MAY BE FLUSH WITH FLOOR OR SLAB OR EXTENDED WITH END AS REQUIRED OR INDICATED ON DRAWINGS.
5. CURB MAY BE ROUND OR HEXAGONAL AT CONTRACTOR'S OPTION.
6. ORIENTATION OF FLOOR PIPE SHALL BE COORDINATED WITH CONNECTING PIPE.

A FLANGED FLOOR PIPE
NO SCALE

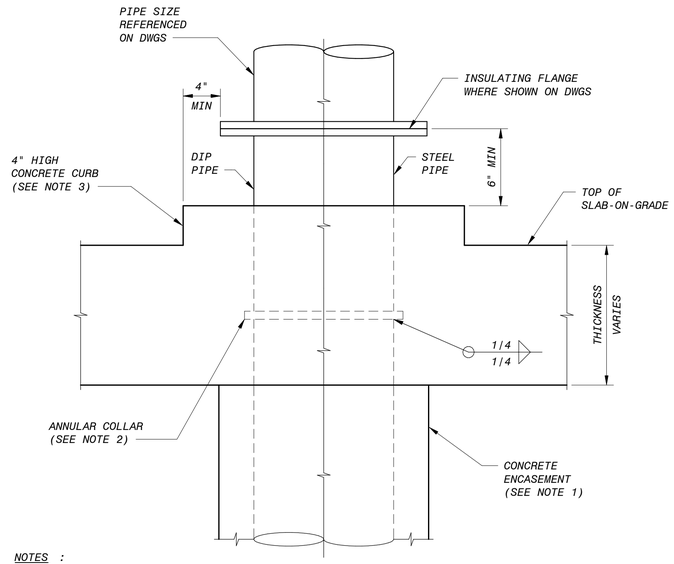

NOTES :

1. SLAB-ON-GRADE APPLICATIONS REQUIRE CONCRETE ENCASEMENT OF BELOW SLAB PIPING. RESTRAINED STYLE JOINTS ARE REQUIRED WHERE PIPE IS CONCRETE ENCASED.
2. ANNULAR COLLAR SHALL BE SAME MATERIAL AS PIPE. 1/4" X 2" FOR STEEL PIPE 20" AND SMALLER, AND 3/8" X 3" FOR PIPE LARGER THAN 20". ANNULAR COLLAR SHALL ONLY BE INCLUDED WHERE INDICATED ON THE DRAWINGS.
3. CURB MAY BE ROUND OR HEXAGONAL AT CONTRACTOR'S OPTION.
4. BOLT HOLES OF FLOOR PIPE SHALL BE ALIGNED WITH CONNECTING PIPE.

B SLAB-ON-GRADE FLOOR PIPE
NO SCALE

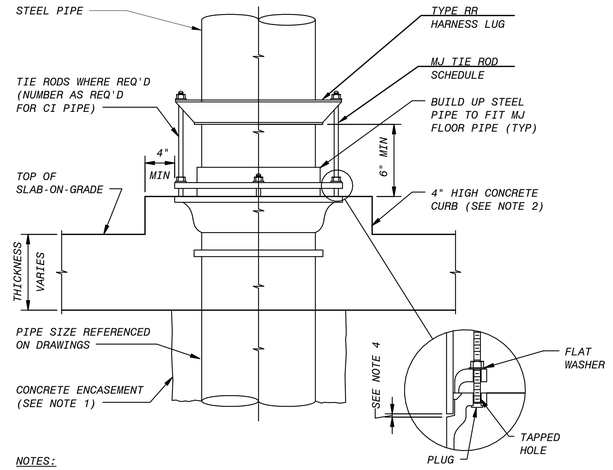

NOTES:

1. SLAB-ON-GRADE APPLICATIONS REQUIRE CONCRETE ENCASEMENT OF BELOW SLAB PIPING. RESTRAINED STYLE JOINTS ARE REQUIRED WHERE PIPE IS CONCRETE ENCASED.
2. CURB MAY BE ROUND OR HEXAGONAL AT CONTRACTOR'S OPTION AND POURED SEPARATELY.
3. BOLT HOLES OF FLOOR PIPE SHALL BE ALIGNED WITH CONNECTING PIPE.
4. FOR PIPING FLEXIBILITY, PROVIDE GAP LARGE ENOUGH TO FACILITATE PIPE ASSEMBLY AND DISASSEMBLY AT ASSOCIATED FLANGE PIPE JOINTS.

C MECHANICAL JOINT SLAB-ON-GRADE FLOOR PIPE
NO SCALE

TIE ROD SCHEDULE			
PIPE SIZE (IN)	MAXIMUM PRESSURE (PSI) (NOTE 1)	TIE RODS NO. OF RODS (NOTE 2)	TIE RODS DIA (IN)
6	250 OR LESS	2	3/4
8	150 OR LESS	2	3/4
10	200 OR LESS	2	3/4
	350	6	3/4
12	150 OR LESS	2	3/4
	300	4	3/4
14	100 OR LESS	2	3/4
	200	4	3/4
16	75 OR LESS	2	3/4
	150	4	3/4
18	75 OR LESS	2	3/4
	150	4	3/4
20	50 OR LESS	2	3/4
24	75	4	3/4
30	50 OR LESS	4	1
36	50 OR LESS	4	1
	100	8	1
42	50 OR LESS	4	1 1/4

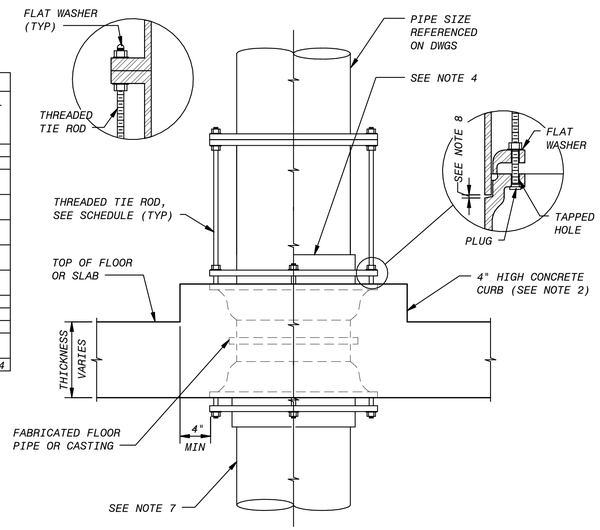

NOTES :

1. PRESSURE SHALL BE THE PRESSURE AT WHICH THE PIPE IS HYDROSTATICALLY TESTED, OR IF THERE IS NO HYDROSTATIC FIELD TEST, IT SHALL BE THE SPECIFIED SHOP TEST PRESSURE.
2. ORIENTATION OF FLOOR PIPE SHALL BE COORDINATED WITH CONNECTING PIPE AND TIE RODS, TIE RODS SHALL BE SPACED UNIFORMLY AROUND THE PIPE.
3. EXCEPT WHERE TIE RODS ARE REQUIRED, BOLTS FOR FOLLOWER RINGS SHALL BE BOLT-STUDS ON FLOOR PIPE. ALL BOLT HOLES IN FLOOR PIPE SHALL BE TAPPED. BOLT HOLES OF FLOOR PIPE SHALL BE ALIGNED WITH CONNECTING PIPE.
4. FOR STEEL AND OTHER PIPE APPLICATIONS, BUILD UP END OF STEEL PIPE TO FIT MJ WALL PIPE.
5. CURB MAY BE ROUND OR HEXAGONAL AT CONTRACTOR'S OPTION.
6. WHERE PIPE IS REQUIRED ON ONE SIDE OF THE SLAB ONLY, PROVIDE A MJxPE FITTING.
7. SLAB-ON-GRADE APPLICATIONS REQUIRE CONCRETE ENCASEMENT OF BELOW FLOOR PIPING. RESTRAINED STYLE JOINTS ARE REQUIRED WHERE PIPE IS CONCRETE ENCASED.
8. FOR PIPING FLEXIBILITY, PROVIDE GAP LARGE ENOUGH TO FACILITATE PIPE ASSEMBLY AND DISASSEMBLY AT ASSOCIATED FLANGE PIPE JOINTS.

D FLANGED-MECHANICAL JOINT FLOOR PIPE WITH TIE RODS
NO SCALE

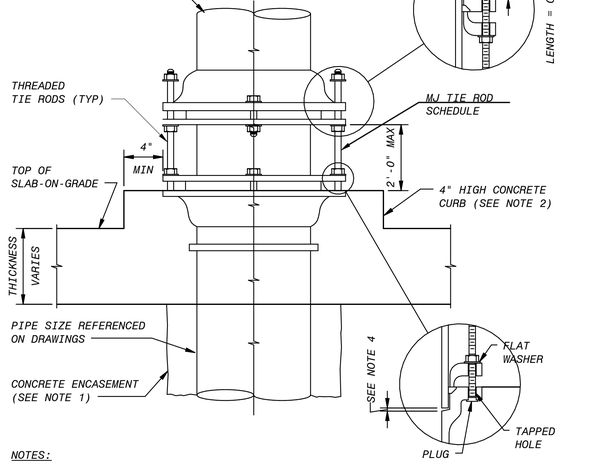

NOTES:

1. SLAB-ON-GRADE APPLICATIONS REQUIRE CONCRETE ENCASEMENT OF BELOW SLAB PIPING. RESTRAINED STYLE JOINTS ARE REQUIRED WHERE PIPE IS CONCRETE ENCASED.
2. CURB MAY BE ROUND OR HEXAGONAL AT CONTRACTOR'S OPTION AND POURED SEPARATELY.
3. EXCEPT WHERE TIE RODS ARE REQUIRED, BOLTS FOR THE FOLLOWER RINGS SHALL BE BOLT-STUDS ON FLOOR PIPE. ALL BOLT HOLES IN FLOOR PIPE SHALL BE TAPPED, BOLT HOLES OF FLOOR PIPE SHALL BE ALIGNED WITH CONNECTING PIPE.
4. FOR PIPING FLEXIBILITY, PROVIDE GAP LARGE ENOUGH TO FACILITATE PIPE ASSEMBLY AND DISASSEMBLY AT ASSOCIATED FLANGE PIPE JOINTS.
5. PRESSURE SHALL BE THE PRESSURE AT WHICH THE PIPE IS HYDROSTATICALLY TESTED, OR IF THERE IS NO HYDROSTATIC FIELD TEST, IT SHALL BE THE SPECIFIED SHOP TEST PRESSURE.

E MECHANICAL JOINT SLAB-ON-GRADE FLOOR PIPE 2
NO SCALE

NO.	BY	CHK	APP
0	KEZ	RWF	EVB

REVISIONS AND RECORD OF USE

ISSUED FOR CONSTRUCTION — 5/19/2020

DATE

REGISTERED PROFESSIONAL ENGINEER
ERICK V. BEVINGTON
No. C 78836
CIVIL
STATE OF CALIFORNIA
5/20/2020

BLACK & VEATCH
JOINT VENTURE
BLACK & VEATCH
FILANC

CITY OF MORRO BAY
MORRO BAY WATER RECLAMATION FACILITY (WRF)

GENERAL
CIVIL-MECHANICAL
DETAILS

DESIGNED: KEZ
DETAILED: MAK
CHECKED: EVB
APPROVED: EVB
DATE: 5/19/2020

0 1/2 1
IF THIS BAR DOES NOT MEASURE 1" THEN DRAWING IS NOT TO FULL SCALE

PROJECT NO.
400530

00-M-509
SHEET
28 OF 412

PLOTTED: 5/14/2020 4:00:24 PM
D400530

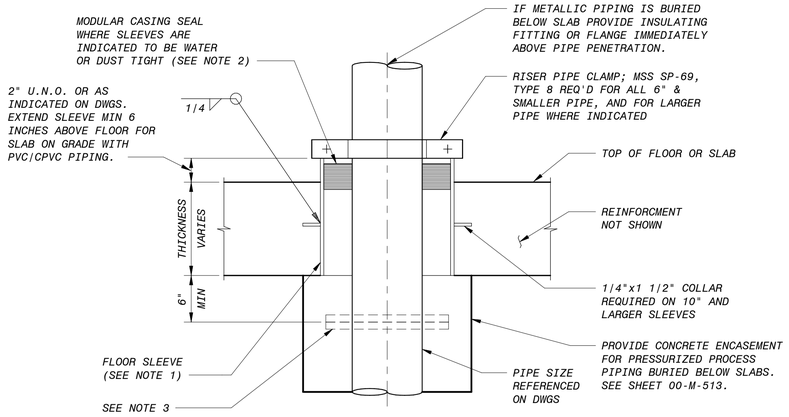

NOTES :

1. FLOOR SLEEVE, SCHEDULE 40 STEEL PIPE FOR 12" AND SMALLER SLEEVES, 1/4" STEEL PIPE FOR SLEEVES LARGER THAN 12", AND HOT DIP GALVANIZE AFTER FABRICATION. COORDINATE SIZE OF SLEEVE WITH MODULAR SEAL MANUFACTURER.
2. FIRESAFING TO BE PROVIDED AT ALL RATED LOCATIONS INDICATED ON THE DRAWINGS AND INSTALLED PER ACCEPTED UL RATED SYSTEMS.
3. TO MINIMIZE SLEEVE SIZE PROVIDE A SCREW-ON FLANGE, GROOVED COUPLING, OR MECHANICAL COUPLING WITH ANCHOR STUDS ON ONE SIDE OF OPENING.

A STEEL FLOOR SLEEVE
12-C-503 NO SCALE

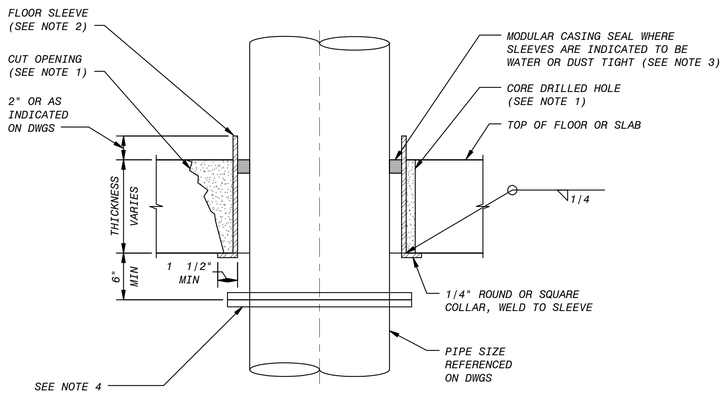

NOTES:

1. FOR SLEEVE OPENINGS SMALLER THAN 12 INCHES IN DIAMETER, CORE DRILLED OPENINGS MAY BE USED. FOR LARGER SLEEVES CUT AND BREAK OUT OPENINGS AS NOTED ON THE DRAWINGS. APPLY BONDING AGENT TO EXISTING CONCRETE AND FILL SPACE WITH NON-SHRINK GROUT.
2. FLOOR SLEEVE, SCHEDULE 40 STEEL PIPE FOR 12" AND SMALLER SLEEVES, 1/4" STEEL PIPE FOR SLEEVES LARGER THAN 12", AND HOT DIP GALVANIZED AFTER FABRICATION. COORDINATE SIZE OF SLEEVE WITH MODULAR SEAL MANUFACTURER.
3. FIRESAFING TO BE PROVIDED AT ALL RATED LOCATIONS INDICATED ON THE DRAWINGS AND INSTALLED PER ACCEPTED UL RATED SYSTEMS.
4. TO MINIMIZE SLEEVE SIZE PROVIDE A SCREW-ON FLANGE, GROOVED COUPLING, OR MECHANICAL COUPLING WITH ANCHOR STUDS ON ONE SIDE OF OPENING.

B 003-271 - EXISTING FLOOR SLEEVE
NO SCALE

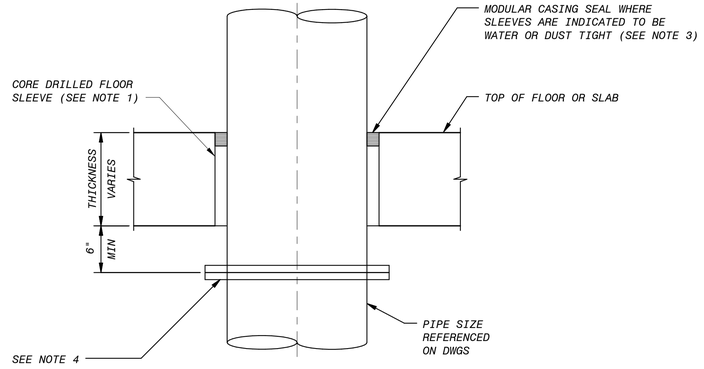

NOTES:

1. CORE DRILL SMOOTH FLOOR OPENING AND COORDINATE DIAMETER WITH MODULAR CASING SEAL MANUFACTURER, MAXIMUM CORE DIAMETER 12".
3. FIRESAFING TO BE PROVIDED AT ALL RATED LOCATIONS INDICATED ON THE DRAWINGS AND INSTALLED PER ACCEPTED UL RATED SYSTEMS.
4. TO MINIMIZE SLEEVE SIZE PROVIDE A SCREW-ON FLANGE, GROOVED COUPLING, OR MECHANICAL COUPLING WITH ANCHOR STUDS ON ONE SIDE OF OPENING.

C 003-272 - CORE DRILLED FLOOR SLEEVE
NO SCALE

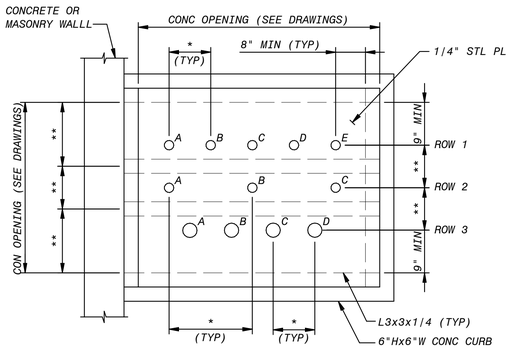

* SEE PIPE SPACING SCHEDULE FOR MINIMUM SPACING
** SPACING AS REQUIRED AND ADJUSTED FOR PIPING SIZE

PLAN

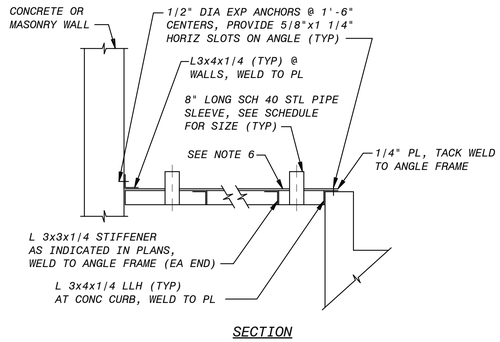

SECTION

PANEL SLEEVE SCHEDULE	
SOLUTION OR GAS LINE SIZE (INCHES)	SCHEDULE 40 NOMINAL SLEEVE SIZE (INCHES)
3/4	1 1/2
1	2
1 1/2	2 1/2
2	3
2 1/2,3	4
4	5

PIPE SPACING SCHEDULE
MINIMUM CENTERLINE TO CENTERLINE SPACING IN INCHES

PIPE SIZE (INCHES)	PIPE SIZE (INCHES)						
	3/4	1	1 1/2	2	2 1/2	3	4
3/4	4 1/2	4 3/4	5 1/4	6	6 3/4	6 3/4	6 3/4
1	-	5	5 1/2	6	7	7	7
1 1/2	-	-	6 1/4	6 3/4	7 1/2	7 1/2	7 1/2
2	-	-	-	7 1/4	8 1/4	8 1/4	9
2 1/2	-	-	-	-	9	9	10
3	-	-	-	-	-	9	10
4	-	-	-	-	-	-	12

D TYPICAL FLOOR SLEEVE PANEL
NO SCALE

PANEL PIPING SCHEDULE			
PIPE DESIGNATION		PIPE SIZE (INCHES)	PIPE SERVICE
ROW	LETTER		
1	A	-	-
1	B	-	-
1	C	-	-
1	D	-	-
1	E	-	-
2	A	-	-
2	B	-	-
2	C	-	-
3	A	-	-
3	B	-	-
3	C	-	-
3	D	-	-

NOTES :

1. SEE PANEL PIPING SCHEDULE FOR PIPING SIZE AND SERVICE.
2. WHERE LINES ARE INDICATED ON PIPING SCHEDULE TO BE FUTURE, INSTALL SLEEVES WITH THREADED ENDS OF THE SIZE AS INDICATED IN PANEL SLEEVE SCHEDULE. FILL SLEEVE WITH SAFING INSULATION AS REQUIRED AND INSTALL THREADED CAPS.
3. PIPE SPACING SHALL BE UNIFORM WITHIN THE OPENING, WITH MINIMUM SPACING AND ALLOWANCES AS INDICATED.
4. CONTRACTOR SHALL COORDINATE THE SPACING AND ALLOWANCES OF ALL PIPING AND SLEEVES PRIOR TO FABRICATION OF PANEL.
5. FIRESAFEING SHALL BE PROVIDED AT ALL RATED LOCATIONS INDICATED ON THE DRAWINGS AND INSTALLED PER ACCEPTED UL RATED SYSTEMS.
6. ALL PANEL MATERIAL, EXCEPT SLEEVES, SHALL BE 1/4" STEEL PL WELDED CONSTRUCTION. IN EXTERIOR LOCATIONS PIPE SLEEVES SHALL BE SEAL WELDED ALL AROUND.

NO.	BY	CHK	APP
0	KEZ	RT	EVB

REVISIONS AND RECORD OF USE

5/19/2020 ISSUED FOR CONSTRUCTION

DATE

REGISTERED PROFESSIONAL ENGINEER
ERICK V. BEVINGTON
No. C 78836
STATE OF CALIFORNIA
CIVIL
5/20/2020

BLACK & VEATCH
JOINT VENTURE
FILANC
BLACK & VEATCH

CITY OF MORRO BAY
MORRO BAY WATER
RECLAMATION FACILITY (WRF)

GENERAL
CIVIL-MECHANICAL
DETAILS

DESIGNED: KEZ
DETAILED: MAK
CHECKED: EVB
APPROVED: EVB
DATE: 5/19/2020

0 1/2 1
IF THIS BAR DOES NOT MEASURE 1" THEN DRAWING IS NOT TO FULL SCALE

PROJECT NO.
400530

00-M-510
SHEET
29 OF 412

PLOTTED: 5/14/2020 4:00:26 PM
D400530

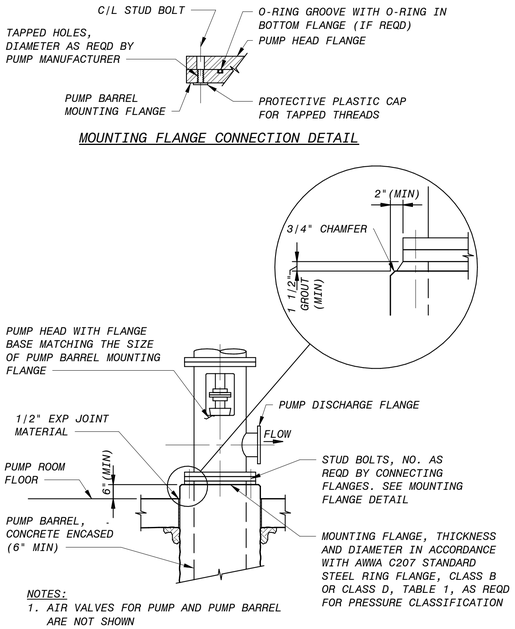

NOTES:
1. AIR VALVES FOR PUMP AND PUMP BARREL ARE NOT SHOWN
2. CONTACT SURFACES BETWEEN PUMP HEAD AND MOUNTING FLANGE SHALL BE MACHINED.

A VERTICAL DIFFUSION VANE PUMP BARREL INSTALLATION DETAILS
NO SCALE

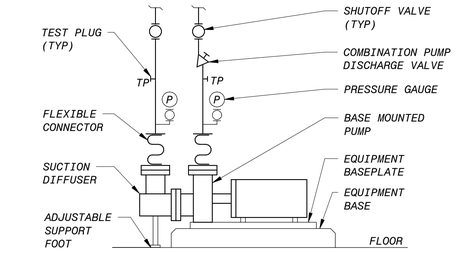

B END SUCTION CENTRIFUGAL PUMP PIPING
NO SCALE

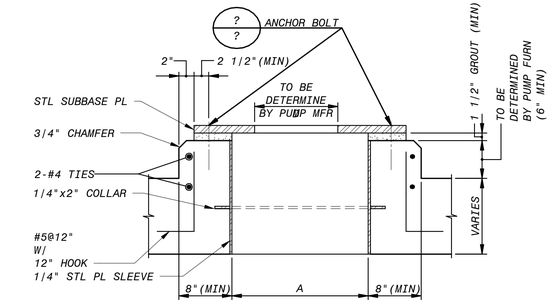

PUMP	A

D VERTICAL DIFFUSION PUMP BASE
NO SCALE

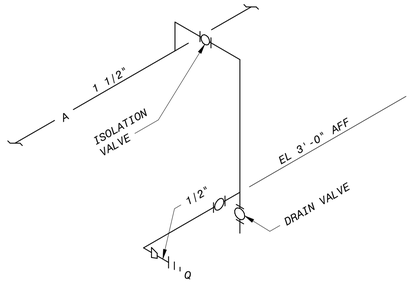

E SERVICE AIR OUTLET PIPING
NO SCALE

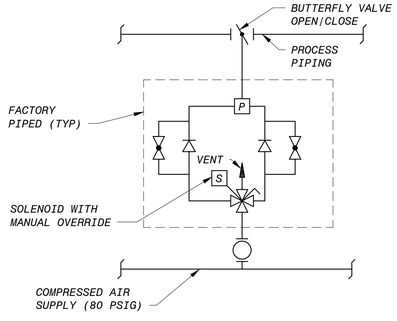

H AIR CYLINDER ACTUATOR - OPEN/CLOSE
NO SCALE

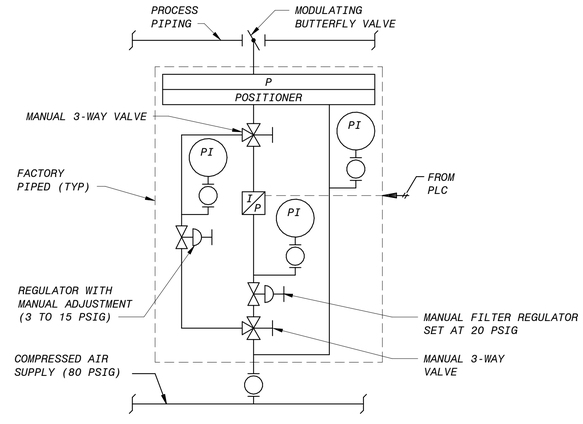

I AIR CYLINDER ACTUATOR - MODULATING
NO SCALE

NO.	BY	CHK	APP	DATE	REVISIONS AND RECORD OF USE
0	KEZ	RT	EVB	5/19/2020	ISSUED FOR CONSTRUCTION

REGISTERED PROFESSIONAL ENGINEER
ERICK V. BEVINGTON
No. C 78836
CIVIL
STATE OF CALIFORNIA
5/20/2020

BLACK & VEATCH
JOINT VENTURE
BLACK & VEATCH
FILANC

CITY OF MORRO BAY
MORRO BAY WATER
RECLAMATION FACILITY (WRF)

GENERAL
CIVIL-MECHANICAL
DETAILS

DESIGNED: KEZ
DETAILED: MAK
CHECKED: EVB
APPROVED: EVB
DATE: 5/19/2020

0 1/2 1
IF THIS BAR DOES NOT MEASURE 1" THEN DRAWING IS NOT TO FULL SCALE

PROJECT NO.
400530

00-M-511
SHEET
30 OF 412

PLOTTED: 5/14/2020 4:00:27 PM
D400530

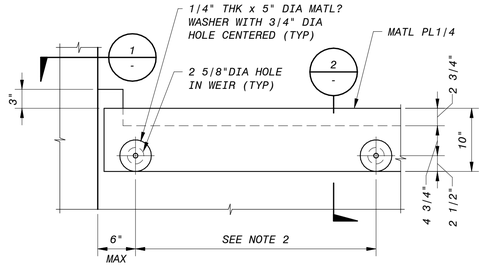

ELEVATION

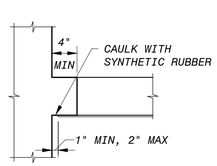

1 SECTION
1" = 1'-0"

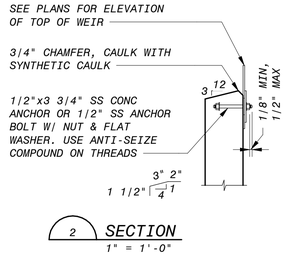

2 SECTION
1" = 1'-0"

NOTES:

1. ALL EDGES, VOIDS, AND SPLICES SHALL BE SEALED WATER TIGHT WITH SYNTHETIC RUBBER.
2. ANCHOR BOLT SPACING - 12"OC FOR STRAIGHT WEIRS AND 2'-0" FOR CIRCULAR WEIRS.
3. WEIR TO BE SET LEVEL TO PROVIDE UNIFORM DISCHARGE AND ALL ADJACENT WEIRS SHALL BE SET AT THE INDICATED ELEVATION WITH ZERO TOLERANCE.

A SHARP CRESTED WEIR
1" = 1'-0"

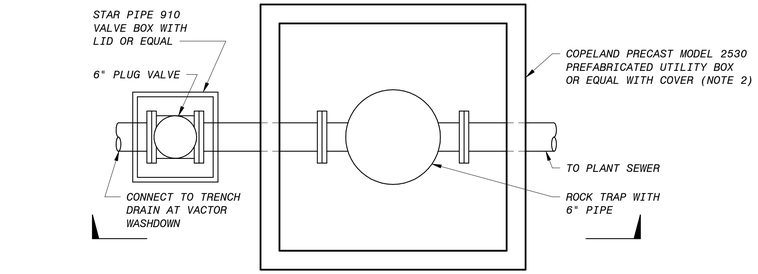

PLAN

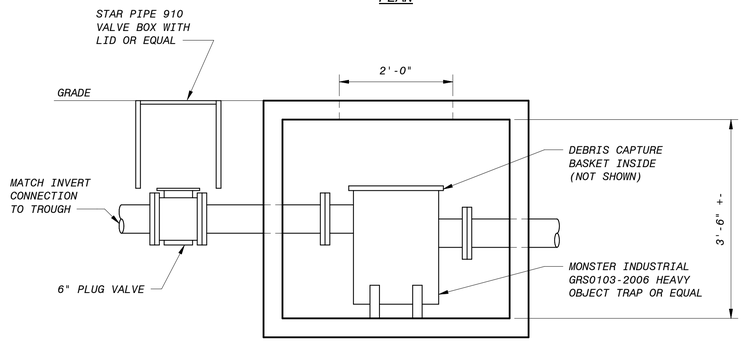

SECTION

B VACTOR WASHDOWN DRAIN ASSEMBLY
NO SCALE

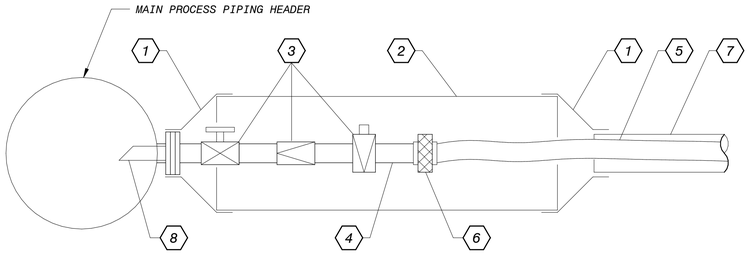

1. FLEXIBLE COUPLING WITH BAND CLAMP ENDS. FERNCO FLEXIBLE CHEMICAL COUPLING OR EQUAL.
2. CLEAR SPLIT PVC PIPING - 6" DIAMETER. CENTRALLY SPLIT FOR ACCESS TO EQUIPMENT. GEORGE FISHER "CONTAIN-IT" OR EQUAL.
3. VALVES - REFER TO P&IDs AND VALVE LIST FOR INFO/SIZING.
4. HARD PIPING - REFER TO P&IDs FOR INFO/SIZING.
5. TUBING - REFER TO P&IDs FOR INFO/SIZING.
6. HARD PIPE TO TUBING ADAPTER.
7. SECONDARY CONATINMENT PIPING - REFER TO P&ID FOR INFO.
8. CHEMICAL INJECTION QUILL/DIFFUSER. MATERIAL SHALL BE COMPATIBLE WITH CHEMICAL PER SPECIFIACTIONS AND P&IDS.

E INJECTION POINT DETAIL
3" = 1'-0"

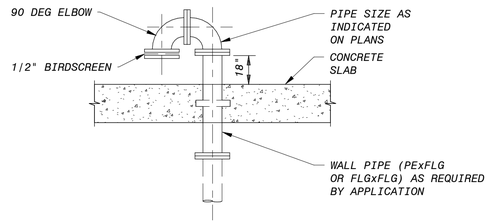

G GOOSENECK VENT - TANK
NO SCALE

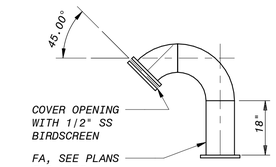

H GOOSENECK VENT - PIPE
NO SCALE

NO.	BY	CHK	APP	DATE	REVISIONS AND RECORD OF USE
0	KEZ	RT	EVB	5/19/2020	ISSUED FOR CONSTRUCTION

REGISTERED PROFESSIONAL ENGINEER
ERICK V. BEVINGTON
No. C 78836
CIVIL
STATE OF CALIFORNIA
5/20/2020

BLACK & VEATCH JOINT VENTURE
BLACK & VEATCH
FILANC

CITY OF MORRO BAY
MORRO BAY WATER RECLAMATION FACILITY (WRF)

GENERAL
CIVIL-MECHANICAL
DETAILS

DESIGNED: KEZ
DETAILED: JPS
CHECKED: EVB
APPROVED: EVB
DATE: 5/19/2020

0 1/2 1
IF THIS BAR DOES NOT MEASURE 1" THEN DRAWING IS NOT TO FULL SCALE

PROJECT NO.
400530

00-M-512
SHEET
31 OF 412

PLOTTED: 5/14/2020 4:00:28 PM
D400530

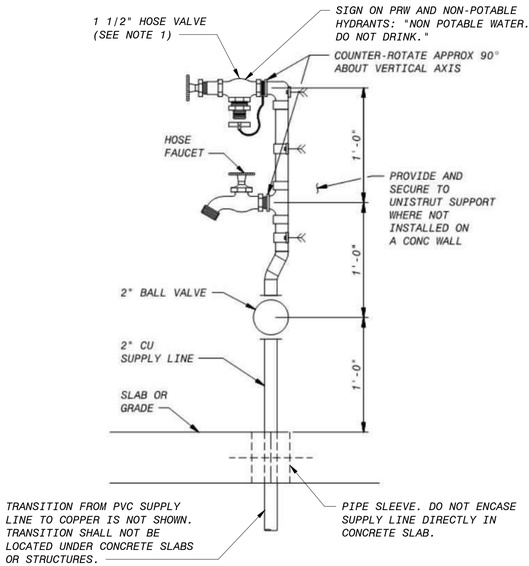

NOTE:

1. FOR WASHDOWN RACK HYDRANTS, PROVIDE 2" HOSE VALVE.

A YARD HYDRANT DETAIL

NO SCALE

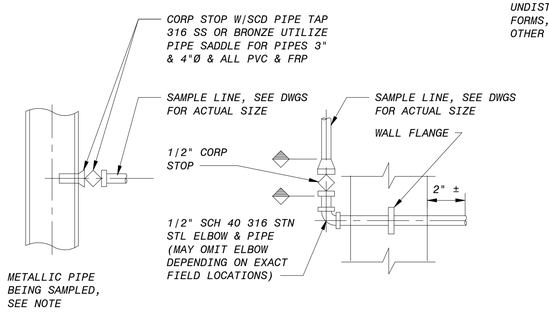

NOTE:
FOR PIPES 2-1/2"Ø OR LESS, UTILIZE TEE IN MAIN LINES

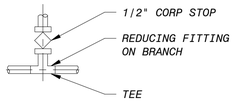

B SAMPLE TAP CONNECTION

3" = 1'-0"

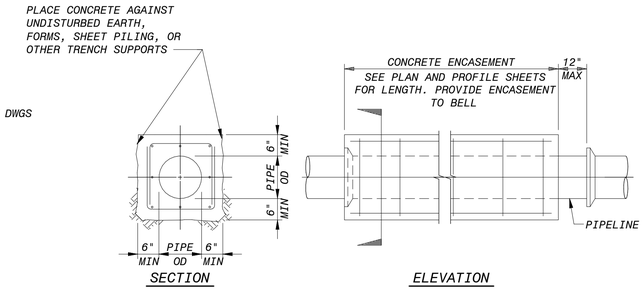

NOTE:

1. HOLD BACK ENCASEMENT 6 INCHES FROM MATERIAL TRANSITIONS TO ACCOMMODATE ASSEMBLY.
2. PROVIDE REINFORCING WHERE LESS THAN MIN ALLOWABLE COVER OVER BURIED PIPING EXCEPT FOR VERTICAL PIPE NEAR GRADE. SIZE AND SPACING TO BE PER ENGINEER OF RECORD.
3. PROVIDE MIN 3 INCHES COVER OVER BELLS AND FLANGES.
4. EXTEND ENCASEMENT OF VERTICAL PIPING AT GRADE TO 2 INCHES ABOVE GRADE. NEATLY FORM CONCRETE WITH ROUND TUBE FORM AND SLOPE AWAY FROM PIPE WALL AT UNIFORM 1/2 IN/FT SLOPE.

C CONCRETE ENCASEMENT

00-M-508 12" = 1'-0"

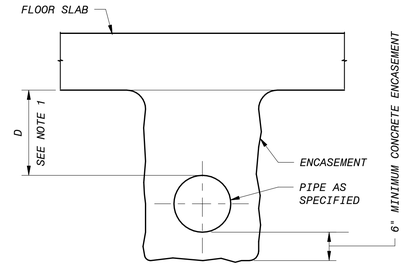

NOTE:

1. IF D IS LESS THAN 1'-6", PROVIDE ENCASEMENT CONTINUOUS TO SLAB IF D IS GREATER THAN 1'-6", ENCASEMENT MAY BE SEPARATED FROM SLAB
2. PROVIDE MIN 3 INCHES COVER OVER BELLS AND FLANGES.

D CONCRETE ENCASEMENT FOR PIPE UNDER SLABS

3/4" = 1'-0"

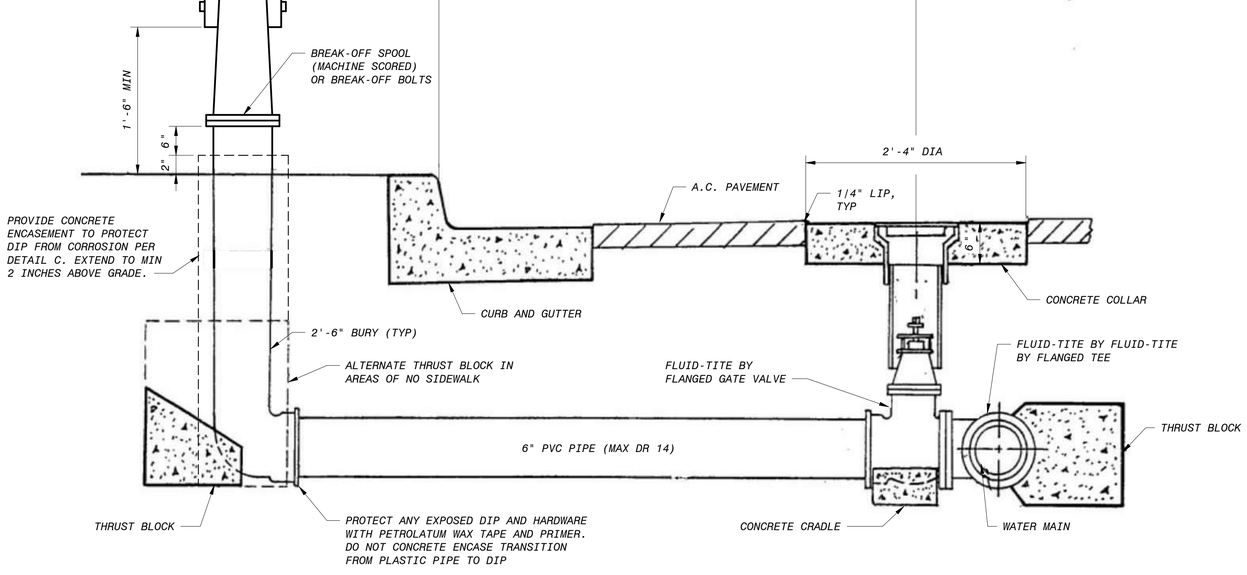

NOTES:

1. CONCRETE COLLAR, CRADLE, AND THRUST BLOCKS SHALL HAVE A MINIMUM 2500 PSI COMPRESSIVE STRENGTH IN 28 DAYS.
2. VALVE BOX, COVER, AND EXTENSION SHALL BE BROOKS NO 3RT, OR EQUAL AS APPROVED BY PUBLIC WORKS DEPARTMENT. COVER SHALL BE MARKED "WATER".
3. SEE CITY OF MORRO BAY DRAWING W-2 FOR THRUST BLOCK DETAILS.
4. FIRE HYDRANT SHALL HAVE ONE (1) 4-1/2" OUTLET AND TWO (2) 2-1/2" OUTLETS, RICH 960 OR APPROVED EQUAL.
5. PROVIDE TWO GUARD POSTS ADJACENT TO FIRE HYDRANT, ONE EACH SIDE OF HYDRANT, PARALLEL TO ROADWAY. PROVIDE 3 FT CLEARANCE BETWEEN HYDRANT AND GUARDPOST.
6. ELIMINATE THRUST BLOCKS WHERE PIPING IS RESTRAINED IF ALLOWED BY CITY.
7. BURIED FLANGE HARDWARE SHALL BE 316 STAINLESS STEEL. ALL BURIED METALLIC PIPING (WHERE NOT CONCRETE ENCASED) AND HARDWARE SHALL BE PROTECTED WITH PETROLATUM WAX TAPE AND PRIMER.

E DETAIL

NO SCALE

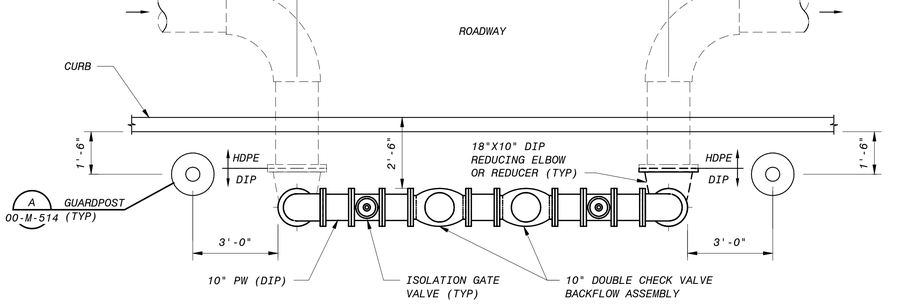

PLAN

NOTES:

1. DOUBLE-CHECK-DETECTOR CHECK BACKFLOW PREVENTER ASSEMBLY (DCDA) SHALL BE IN ACCORDANCE WITH SECTION 7601 OF TITLE 17 OF THE CALIFORNIA CODE OF REGULATIONS AND APPROVED BY THE UNIVERSITY OF SOUTHERN CALIFORNIA FOUNDATION FOR CROSS-CONNECTION CONTROL AND HYDRAULIC RESEARCH. CONTACT THE CITY FOR A LIST OF APPROVED ASSEMBLIES.
2. THE DCDA SHALL BE A SPECIALLY DESIGNED ASSEMBLY COMPOSED OF A LINE-SIZE APPROVED DOUBLE CHECK VALVE ASSEMBLY, TEST COCKS, AND A BYPASS CONTAINING AN APPROVED WATER METER AND DOUBLE CHECK VALVE ASSEMBLY.
3. ALL FITTINGS SMALLER THAN 3" DIA. SHALL BE COPPER WITH LEAD FREE SOLDER OR LEAD-FREE BRASS.
4. ALL RISERS AND ABOVE GROUND MAIN LINE PIPING SHALL BE CEMENT MORTAR LINED FLANGED DIP.
5. MATERIALS SHALL BE UL LISTED FOR FIRE SERVICE.
6. PROVIDE CLEARANCES AROUND DEVICE PER MANUFACTURER'S RECOMMENDATIONS AND ADEQUATE FOR TESTING.
7. GATE VALVES SHALL BE OUTSIDE STEM AND YOKE TYPE RESILIENT SEATED TYPE.
8. DOUBLE CHECK DETECTOR METER SHALL BE SUPPLIED WITH REGISTER THAT MEASURES IN CU FT.
9. BACKFLOW PREVENTION ASSEMBLY SHALL BE INSTALLED ABOVE GROUND WITH 12 TO 24 INCHES CLEARANCE.
10. A MINIMUM OF ONE ADJUSTABLE PIPE SUPPORT SHALL BE PROVIDED UNDER THE ASSEMBLY. PROVIDE TYPICAL EQUIPMENT SUPPORT SLAB FOR SUPPORT.
11. THRUST BLOCKS SHALL BE PROVIDED AT ELBOWS AND SHALL BE PER CITY OF MORRO BAY STANDARD DETAIL W-2 UNLESS OTHERWISE ALLOWED BY CITY.
12. PROVIDE VALVE SUPERVISORY TAMPER SWITCHES ON THE ISOLATION GATE VALVES OF BACKFLOW PREVENTER ASSEMBLY.
13. TRANSITION BETWEEN DIP AND HDPE SHALL BE AT THE BURIED FLANGES INDICATED AND SHALL BE PER THE REQUIREMENTS OF DETAIL E/00-M-508.

F DOUBLE CHECK VALVE BACKFLOW PREVENTER ASSEMBLY ENLARGED VIEW

3/8" = 1'-0"

NO.	BY	CHK	APP
0	KEZ	RWF	EVB

REVISIONS AND RECORD OF USE

ISSUED FOR CONSTRUCTION 5/19/2020

DATE

REGISTERED PROFESSIONAL ENGINEER — ERICK V. BEVINGTON — No. C 78836 — CIVIL — STATE OF CALIFORNIA — 5/20/2020

BLACK & VEATCH / JOINT VENTURE / BLACK & VEATCH / FILANC

CITY OF MORRO BAY
MORRO BAY WATER RECLAMATION FACILITY (WRF)

GENERAL
CIVIL - MECHANICAL
DETAILS

DESIGNED:	KEZ
DETAILED:	JPS
CHECKED:	EVB
APPROVED:	EVB
DATE:	5/19/2020

0 1/2 1

IF THIS BAR DOES NOT MEASURE 1" THEN DRAWING IS NOT TO FULL SCALE

PROJECT NO. 400530

00-M-513

SHEET 32 OF 412

PLOTTED: 5/14/2020 4:00:29 PM

D400530

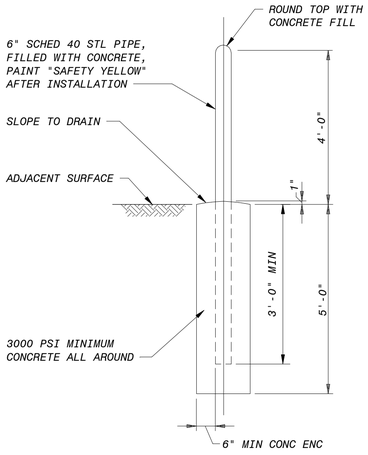

A GUARD POST DETAIL

00-M-513 12" = 1'-0"

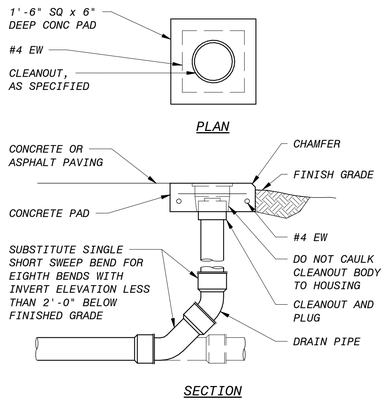

B GRADE CLEANOUT

12" = 1'-0"

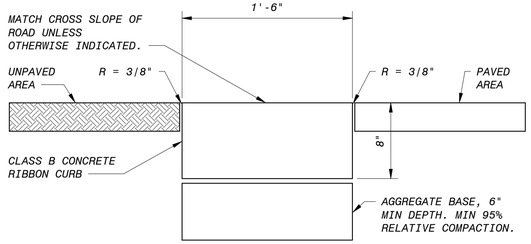

NOTES:

1. 1/4" EXPANSION JOINTS SHALL BE INSTALLED AT 24 FT INTERVALS AND SHALL BE PER CITY OF MORRO BAY STANDARDS.
2. BROOM FINISH ALL SURFACES.

C RIBBON CURB

1 1/2" = 1'-0"

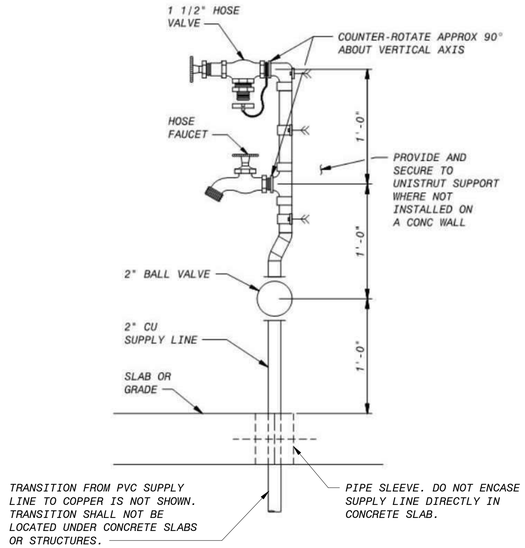

NOTE:
REFER TO SPECIFICATION 40 05 51 FOR ADDITIONAL INFORMATION

F POTABLE YARD HYDRANT

NO SCALE

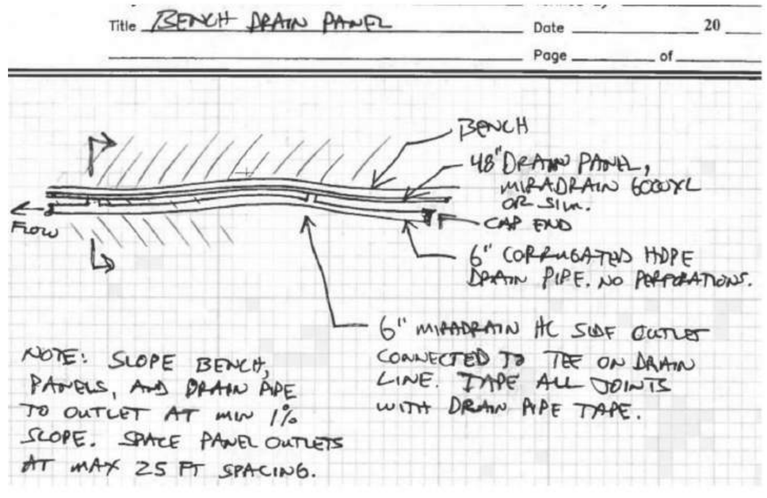

D BENCH DRAIN PANEL

12" = 1'-0"

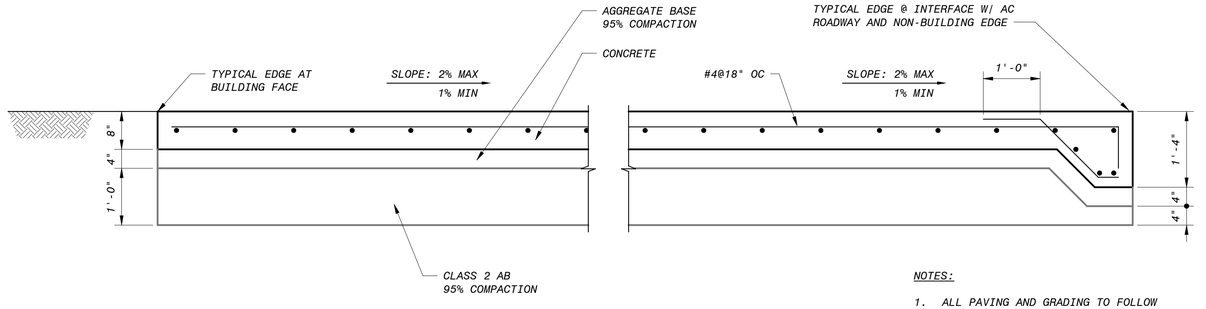

NOTES:

1. ALL PAVING AND GRADING TO FOLLOW ELEVATIONS SET BY CONTOURS ON PLAN UNLESS OTHERWISE NOTED.
2. MINIMUM CLEAR COVER OF 3" SHALL BE USED FOR ALL REINFORCING.
3. FULL DEPTH CONSTRUCTION JOINTS SHALL BE AT 10 FT CENTERS EACH WAY. PROVIDE #4 SMOOTH JOINT DOWELS AT 18" EACH WAY.

E CONCRETE PAVEMENT TYPICAL CROSS SECTION

3/4" = 1'-0"

NO.	BY	CHK	APP	DATE	REVISIONS AND RECORD OF USE
0	KEZ	RWF	EVB	5/19/2020	ISSUED FOR CONSTRUCTION

REGISTERED PROFESSIONAL ENGINEER
ERICK V. BEVINGTON
No. C 78836
CIVIL
STATE OF CALIFORNIA
5/20/2020

BLACK & VEATCH
JOINT VENTURE
BLACK & VEATCH
FILANC

CITY OF MORRO BAY
MORRO BAY WATER RECLAMATION FACILITY (WRF)

GENERAL
CIVIL - MECHANICAL
DETAILS

DESIGNED: KEZ
DETAILED: JPS
CHECKED: EVB
APPROVED: EVB
DATE: 5/19/2020

0 1/2 1
IF THIS BAR DOES NOT MEASURE 1" THEN DRAWING IS NOT TO FULL SCALE

PROJECT NO.
400530

00-M-514
SHEET
33 OF 412

PLOTTED: 5/14/2020 4:00:30 PM
D400530

SECTION 1/12-C-102, 12-C-103

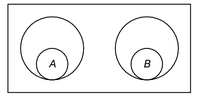

	CHEMICAL	FLUID PIPE	CARRIER PIPE	DOSING POINT
A	SPARE	N/A	2" CPVC	N/A
B	SODIUM BISULFITE	1/2" POLYETHYLENE	2" CPVC	TO DECHLOR STATION

SECTION 2/12-C-103

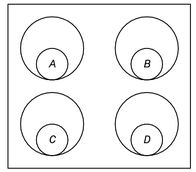

	CHEMICAL	FLUID PIPE	CARRIER PIPE	DOSING POINT
A	SPARE	N/A	2" CPVC	N/A
B	SODIUM HYPOCHLORITE	1/2" TEFLON	2" CPVC	TO PROD WATER INLET
C	SODIUM HYPOCHLORITE	1/2" TEFLON	2" CPVC	TO OUTFALL DISINFECTION
D	SODIUM HYDROXIDE	1/2" POLYETHYLENE	2" CPVC	TO PROD WATER INLET

SECTION 3/12-C-103

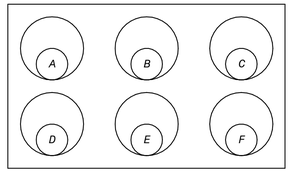

	CHEMICAL	FLUID PIPE	CARRIER PIPE	DOSING POINT
A	SPARE	N/A	2" CPVC	N/A
B	SODIUM BISLUFITE	1/2" POLYETHYLENE	2" CPVC	TO DECHLOR STATION
C	SODIUM HYPOCHLORITE	1/2" TEFLON	2" CPVC	TO PROD WATER INLET
D	SPARE	N/A	2" CPVC	N/A
E	SODIUM HYPOCHLORITE	1/2" TEFLON	2" CPVC	TO OUTFALL DISINFECTION
F	SODIUM HYDROXIDE	1/2" POLYETHYLENE	2" CPVC	TO PROD WATER INLET

SECTION 4/12-C-103

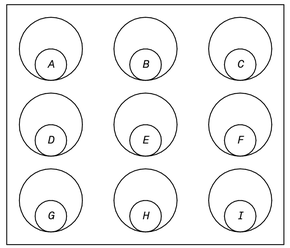

	CHEMICAL	FLUID PIPE	CARRIER PIPE	DOSING POINT
A	SODIUM HYPOCHLORITE	1/2" TEFLON	2" CPVC	BYPASS TO OCEAN OUTFALL
B	CITRIC ACID	1/2" POLYETHYLENE	2" CPVC	RO CIP SYSTEM
C	SULFURIC ACID	1/2" TEFLON	2" CPVC	UPSTREAM OF RO SYSTEM
D	SULFURIC ACID	1/2" TEFLON	2" CPVC	UPSTREAM OF UV SYSTEM
E	SODIUM HYDROXIDE	3/4" POLYETHYLENE	2" CPVC	RO CIP SYSTEM
F	SPARE	N/A	2" CPVC	N/A
G	SODIUM HYPOCHLORITE	1/2" TEFLON	2" CPVC	UPSTREAM OF UV SYSTEM
H	FUTURE LAS	N/A	2" CPVC	N/A
I	ANTISCALANT	1/2" POLYETHYLENE	2" CPVC	UPSTREAM OF RO SYSTEM

SECTION 5/12-C-103, 12-C-104

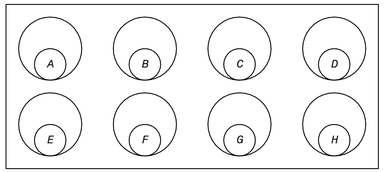

	CHEMICAL	FLUID PIPE	CARRIER PIPE	DOSING POINT
A	SODIUM HYPOCHLORITE	1/2" TEFLON	2" CPVC	PLANT WATER DISCHARGE PUMP
B	SODIUM HYPOCHLORITE	1/2" TEFLON	2" CPVC	UPSTREAM OF RO SYSTEM
C	SODIUM HYPOCHLORITE	3/4" TEFLON	2" CPVC	MBR SYSTEM FOR CLEANING
D	CITRIC ACID	3/4" POLYETHYLENE	2" CPVC	MBR SYSTEM FOR CLEANING
E	SODIUM HYDROXIDE	1/2" POLYETHYLENE	2" CPVC	BNR BASIN INFLUENT
F	SPARE	N/A	2" CPVC	N/A
G	LAS	1/2" POLYETHYLENE	2" CPVC	UPSTREAM OF RO SYSTEM
H	SPARE	N/A	2" CPVC	N/A

SECTION 6/12-C-104

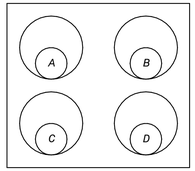

	CHEMICAL	FLUID PIPE	CARRIER PIPE	DOSING POINT
A	SODIUM HYPOCHLORITE	3/4" TEFLON	2" CPVC	MBR SYSTEM FOR CLEANING
B	SODIUM HYDROXIDE	1/2" POLYETHYLENE	2" CPVC	BNR BASIN INFLUENT
C	CITRIC ACID	3/4" POLYETHYLENE	2" CPVC	MBR SYSTEM FOR CLEANING
D	SPARE	N/A	2" CPVC	N/A

SECTION 7/12-C-104

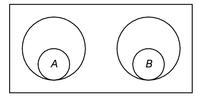

	CHEMICAL	FLUID PIPE	CARRIER PIPE	DOSING POINT
A	SODIUM HYDROXIDE	1/2" POLYETHYLENE	2" CPVC	BNR BASIN INFLUENT
B	SPARE	N/A	2" CPVC	N/A

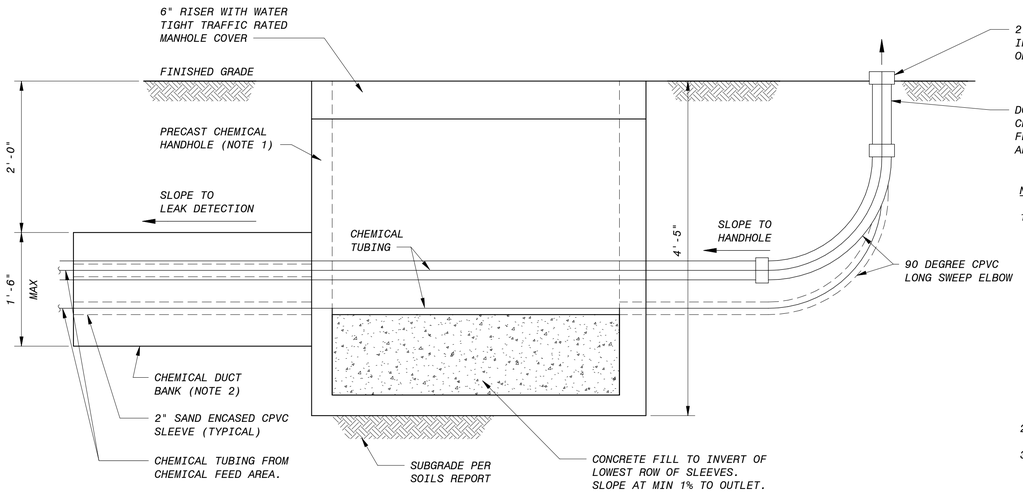

8 TYPICAL CHEMICAL HANDHOLE SECTION

1" = 1'-0"

NOTES:

1. CHEMICAL HANDHOLES SHALL BE TRAFFIC RATED PRECAST CONCRETE STRUCTURES MEASURING APPROXIMATELY 4 FT SQUARE. JENSEN PRECAST MODEL 4848 PULL BOX OR EQUAL. INSTALL TOP COVER FLUSH WITH GRADE. WALLS AND FLOOR INSIDE OF HANDHOLES SHALL BE THOROUGHLY SEALED AND LEAK TESTED. WALLS AND FLOORS SHALL NOT HAVE ANY EXPOSED METALLIC COMPONENTS AND THE CONCRETE SHALL BE COATED WITH CHEMICAL RESISTANT EPOXY COATING AS DESCRIBED IN SPECIFICATION 09 97 24. RESPECTIVE CHEMICAL DUCT BANKS NORTH AND SOUTH OF CHEMICAL BUILDING SHALL SLOPE BETWEEN HANDHOLES TO LEAK DETECTION SYSTEM IN LOWEST HANDHOLE. TO ENSURE POSITIVE DRAINAGE BETWEEN HANDHOLES PROVIDE CONCRETE FILL IN FLOOR OF ALL HANDHOLES TO BRING FLOOR UP TO INVERT OF LOWEST OUTLET SLEEVE PRIOR TO COATING.
2. SEE CHEMICAL DUCT BANK SECTIONS ON THIS SHEET.
3. DEPENDING ON THE SELECTED PRE-CAST PULL BOX, CHEMICAL DUCTS MAY NEED TO BE ADJUSTED TO FIT THROUGH THE KNOCK-OUT SPACES PROVIDED.

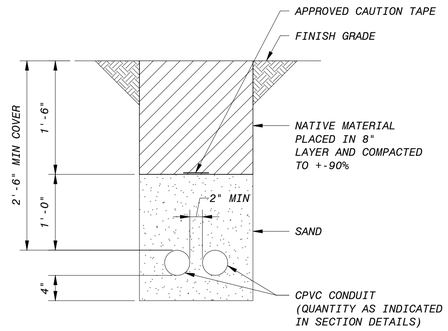

NOTES:

1. REFER TO DETAILS 1-7 TO DETERMINE THE QUANTITY OF DOUBLE CONTAINED CPVC PIPE.

TYPICAL CHEMICAL DUCT BANK SECTION

NO SCALE

NO.	BY	CHK	APP	DATE	REVISIONS AND RECORD OF USE
0	KEZ	RWF	EVB	5/19/2020	ISSUED FOR CONSTRUCTION

REGISTERED PROFESSIONAL ENGINEER
ERICK V. BEVINGTON
No. C 78836
CIVIL
STATE OF CALIFORNIA
5/20/2020

BLACK & VEATCH JOINT VENTURE
BLACK & VEATCH
FILANC

CITY OF MORRO BAY
MORRO BAY WATER RECLAMATION FACILITY (WRF)

GENERAL
CIVIL - MECHANICAL
DETAILS

DESIGNED: KEZ
DETAILED: MAK
CHECKED: EVB
APPROVED: EVB
DATE: 5/19/2020

0 1/2 1
IF THIS BAR DOES NOT MEASURE 1" THEN DRAWING IS NOT TO FULL SCALE

PROJECT NO.
400530

00-M-515
SHEET
34 OF 412

PLOTTED: 5/14/2020 4:28:30 PM
D400530

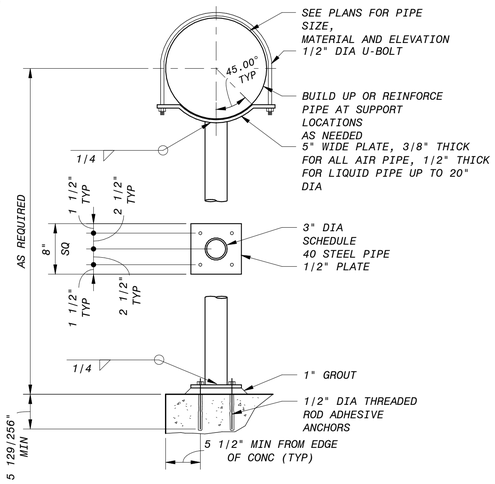

NOTE: ALL STEEL MATERIALS SHALL BE HOT-DIP GALVANIZED FOR EXTERIOR LOCATIONS. VENT HOLES FOR GALVANIZING SHALL BE THE MINIMUM SIZE NECESSARY. HOLES SHALL BE LOCATED IN THE BOTTOM BASEPLATE AND ALSO LOCATED IN THE TOP OF THE PIPE, ADJACENT TO THE CURVED PLATE.

A 3 INCH DIAMETER STEEL COLUMN PIPE SUPPORT

1" = 1'-0"

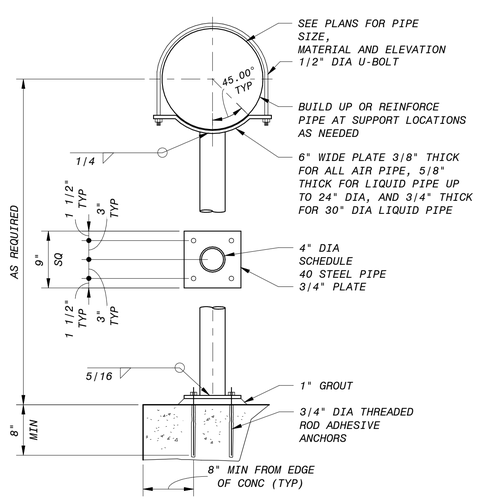

NOTE: ALL STEEL MATERIALS SHALL BE HOT-DIP GALVANIZED FOR EXTERIOR LOCATIONS. VENT HOLES FOR GALVANIZING SHALL BE THE MINIMUM SIZE NECESSARY. HOLES SHALL BE LOCATED IN THE BOTTOM BASEPLATE AND ALSO LOCATED IN THE TOP OF THE PIPE, ADJACENT TO THE CURVED PLATE.

B 4 INCH DIAMETER STEEL COLUMN PIPE SUPPORT

1" = 1'-0"

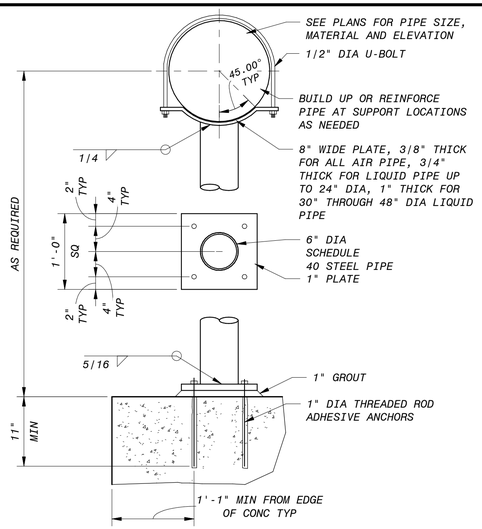

NOTE: ALL STEEL MATERIALS SHALL BE HOT-DIP GALVANIZED FOR EXTERIOR LOCATIONS. VENT HOLES FOR GALVANIZING SHALL BE THE MINIMUM SIZE NECESSARY. HOLES SHALL BE LOCATED IN THE BOTTOM BASEPLATE AND ALSO LOCATED IN THE TOP OF THE PIPE, ADJACENT TO THE CURVED PLATE.

C 6 INCH DIAMETER STEEL COLUMN PIPE SUPPORT

1" = 1'-0"

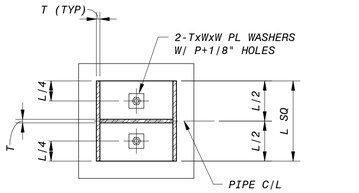

SECTION A-A

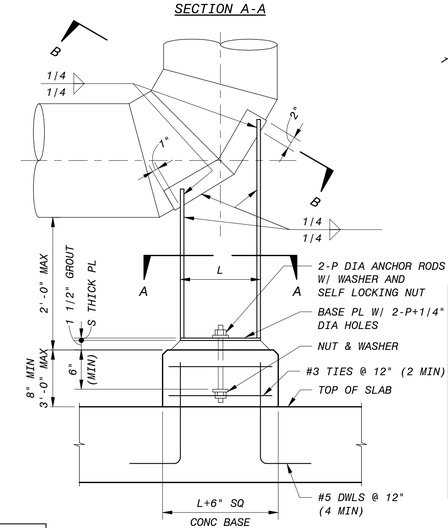

ELEVATION

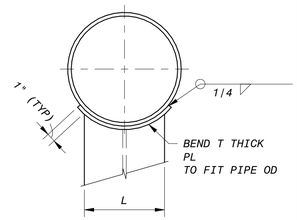

SECTION B-B

DIMENSIONS IN INCHES					
PIPE SIZE	T	S	P	W	L
14	1/4	3/8	3/4	1 3/4	10
16	1/4	3/8	3/4	1 3/4	11 1/2
18	1/4	3/8	3/4	2 1/2	13
20	1/4	3/8	3/4	2 1/2	15
24	1/4	3/8	3/4	2 1/2	17
30	3/8	1/2	3/4	3 1/2	22
36	3/8	1/2	3/4	3 1/2	26
42	7/16	5/8	3/4	4	30
48	1/2	5/8	3/4	4	34
54	9/16	3/4	1	4	39
60	5/8	7/8	1	4	44
66	3/4	1	1	4	48

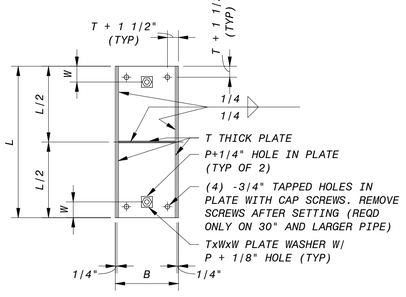

SECTION A-A

DIMENSIONS IN INCHES						
PIPE SIZE	T	S	B	P	W	L
14"	1/4	3/8	8	3/4	2 1/2	10
16"	1/4	3/8	8	3/4	2 1/2	11 1/2
18"	1/4	3/8	10	3/4	2 1/2	13
20"	1/4	3/8	10	3/4	2 1/2	15
24"	1/4	3/8	10	3/4	2 1/2	17
30"	3/8	1/2	12	3/4	3 1/2	22
36"	3/8	1/2	12	3/4	3 1/2	26
42"	7/16	5/8	12	3/4	4	30
48"	1/2	5/8	12	3/4	4	34
54"	9/16	3/4	14	1	4	39
60"	5/8	7/8	15	1	4	44
66"	3/4	1	18	1	4	48

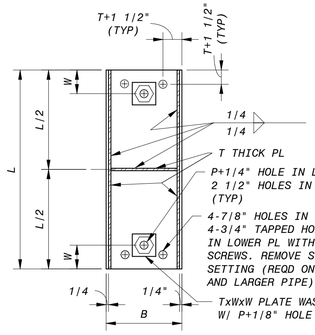

SECTION A-A

DIMENSIONS IN INCHES						
PIPE SIZE	T	S	B	P	W	L
14"	1/4	3/8	8	3/4	2 1/2	10
16"	1/4	3/8	8	3/4	2 1/2	11 1/2
18"	1/4	3/8	10	3/4	2 1/2	13
20"	1/4	3/8	10	3/4	2 1/2	15
24"	1/4	3/8	10	3/4	2 1/2	17
30"	3/8	1/2	12	3/4	3 1/2	22
36"	3/8	1/2	12	3/4	3 1/2	26
42"	7/16	5/8	12	3/4	4	30
48"	1/2	5/8	12	3/4	4	34
54"	9/16	3/4	14	1	4	39
60"	5/8	7/8	15	1	4	44
66"	3/4	1	18	1	4	48

D 90° STEEL PIPE BASE ELBOW SUPPORT

NO SCALE

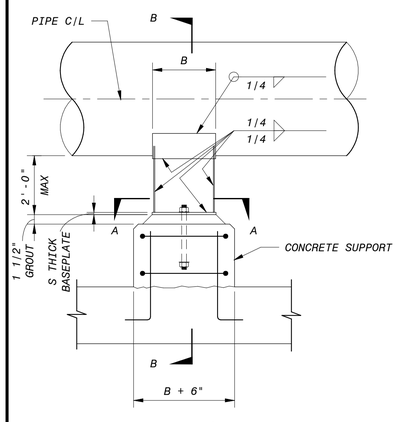

ELEVATION

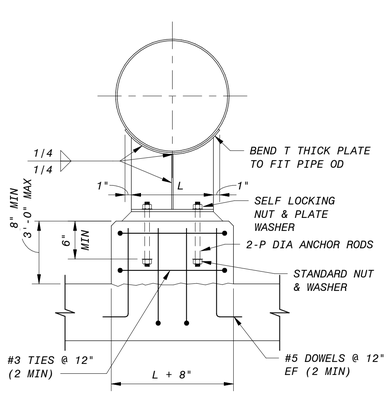

SECTION B-B

E STEEL SADDLE PIPE SUPPORT (FIXED)

NO SCALE

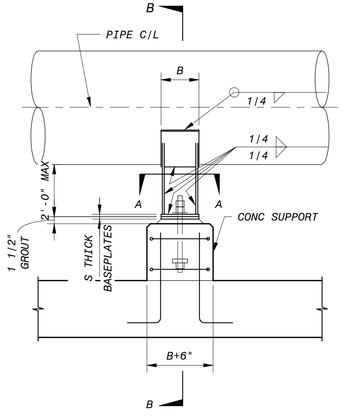

ELEVATION

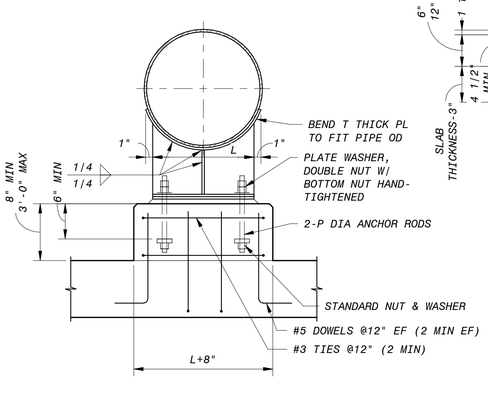

SECTION B-B

F STEEL SADDLE PIPE SUPPORT (SLIDING)

NO SCALE

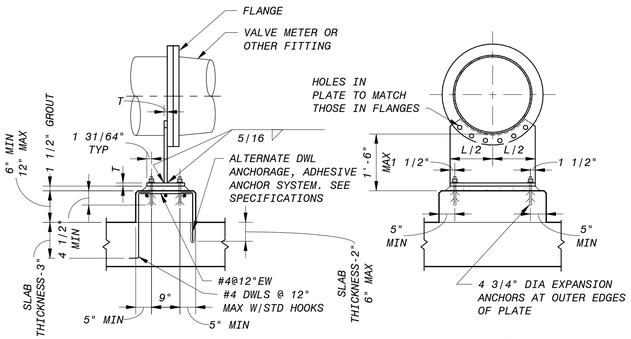

ELEVATION SECTION

PIPE SIZE	T	L
14-18"	5/8"	PIPE OD
20"	3/4"	18"
24"	3/4"	21"
30"	3/4"	27"
36"	3/4"	33"
42"	3/4"	36"
48"	3/4"	42"
54"	3/4"	44"
60"	3/4"	50"

G FLANGED PIPE SUPPORT

1/2" = 1'-0"

NO.	BY	CHK	APP
0	KEZ	RWF	EVB

REVISIONS AND RECORD OF USE

ISSUED FOR CONSTRUCTION — 5/19/2020

DATE

REGISTERED PROFESSIONAL ENGINEER — ERICK V. BEVINGTON — No. C 78836 — CIVIL — STATE OF CALIFORNIA — 5/20/2020

BLACK & VEATCH

JOINT VENTURE

BLACK & VEATCH — FILANC

CITY OF MORRO BAY
MORRO BAY WATER RECLAMATION FACILITY (WRF)

GENERAL
STRUCTURAL
STANDARD DETAILS

DESIGNED: KEZ, EVB
DETAILED: JPS
CHECKED: EVB
APPROVED: EVB
DATE: 5/19/2020

0 1/2 1

IF THIS BAR DOES NOT MEASURE 1" THEN DRAWING IS NOT TO FULL SCALE

PROJECT NO. 400530

00-M-601

SHEET 35 OF 412

PLOTTED: 5/14/2020 4:00:31 PM

D400530

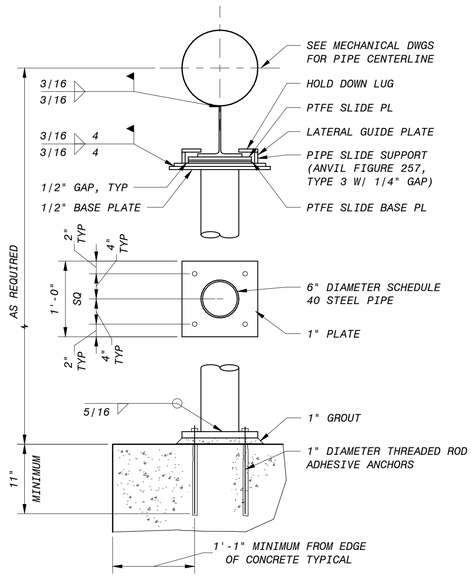

NOTES:

1. ALL STEEL MATERIALS SHALL BE HOT-DIP GALVANIZED FOR EXTERIOR LOCATIONS. VENT HOLES FOR GALVANIZING SHALL BE THE MINIMUM SIZE NECESSARY. HOLES SHALL BE LOCATED IN THE BOTTOM BASEPLATE AND ALSO LOCATED IN THE TOP OF THE PIPE, ADJACENT TO THE CURVED PLATE. FOR LIQUID SIZES UP TO 30".
2. ALL SUPPORT MATERIALS SHALL BE STAINLESS STEEL FOR AERATION SYSTEM AND ACTIVATED SLUDGE BASINS.

A 6 INCH DIAMETER STEEL COLUMN PIPE SUPPORT

NO SCALE

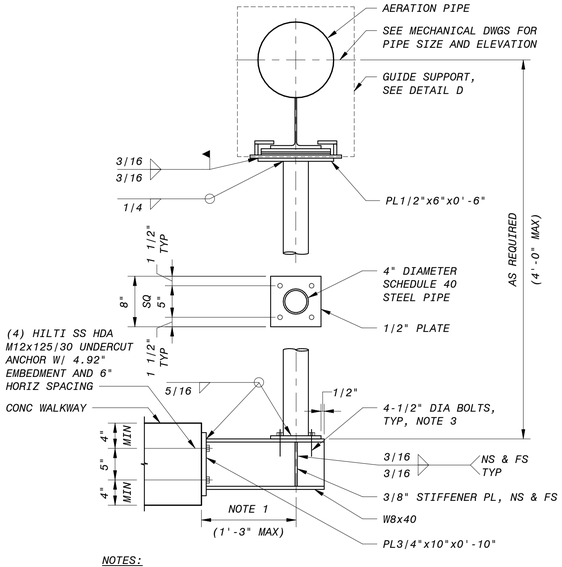

NOTES:

1. SEE MECHANICAL PLAN DWGS FOR DIMENSION.
2. ALL SUPPORT MATERIALS SHALL BE STAINLESS STEEL FOR AERATION SYSTEM.
3. AT SIM, PROVIDE 1" THICK NON-SHRINK GROUT BELOW BASE PLATE WITH 4-1/2" DIA EXPANSION ANCHORS SS 304.
4. CONTRACTOR SHALL LOCATE REINF PRIOR TO DRILLING.

C BASIN STANCHION GUIDE SUPPORT

NO SCALE

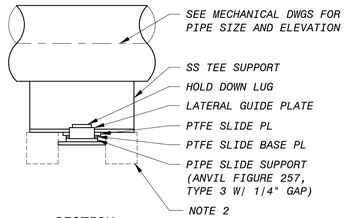

SECTION

NOTES:

1. AERATION PIPE SUPPORTS SHALL BE STAINLESS STEEL EXCEPT WHERE NOTED.
2. WHERE AXIAL STOP IS REQUIRED, REDUCE LENGTH OF TOP PTFE SLIDE PL TO 4" AND CENTER ON SUPPORT TEE ABOVE TO ALLOW AXIAL STOP TO BE WELDED TO BOTTOM OF SUPPORT TEE.

F GUIDE SUPPORT

NO SCALE

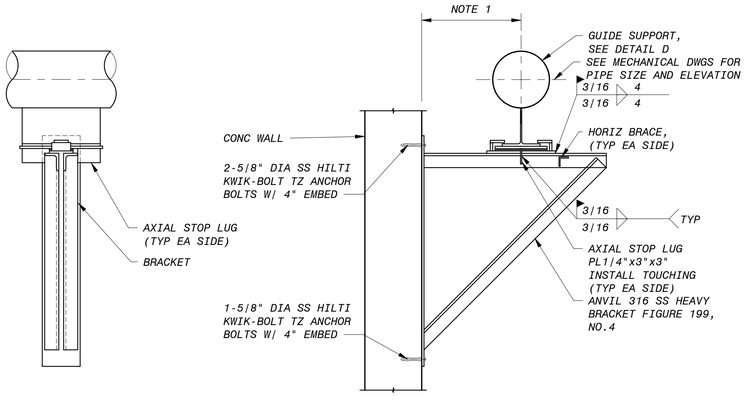

ELEVATION SECTION

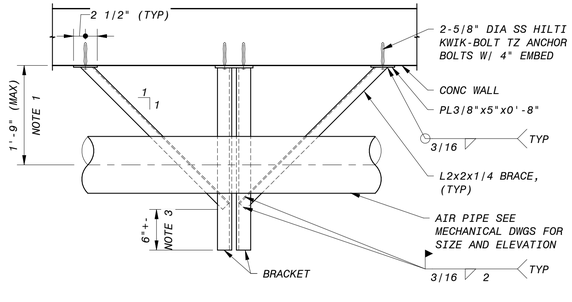

PLAN

NOTES:

1. SEE MECHANICAL PLAN DWGS FOR DIMENSION.
2. ALL SUPPORT MATERIALS SHALL BE STAINLESS STEEL FOR AERATION SYSTEM.
3. FIELD LOCATE HORIZONTAL BRACES TO AVOID CONFLICT WITH VERTICAL BRACES AND AXIAL STOP LUG.
4. CONTRACTOR SHALL LOCATE REINF PRIOR TO DRILLING.

D KNEE BRACE AXIAL SUPPORT

NO SCALE

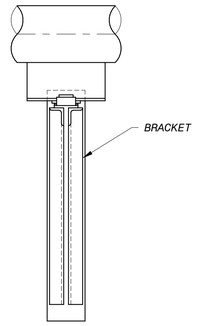

ELEVATION

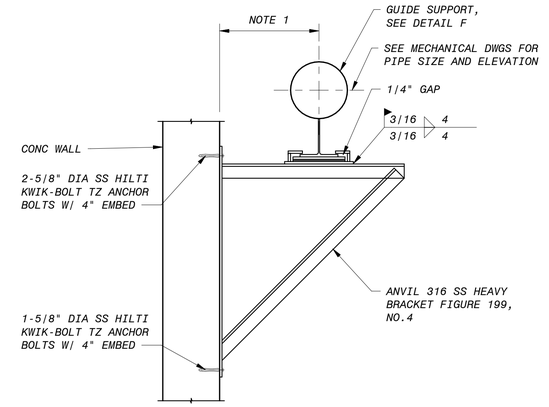

SECTION

NOTES:

1. SEE MECHANICAL PLAN DWGS FOR DIMENSION.
2. BRACKET SUPPORTS SHALL BE 316 STAINLESS STEEL FOR AERATION SYSTEM.
3. CONTRACTOR SHALL LOCATE REINF PRIOR TO DRILLING.

B KNEE BRACE SUPPORT

NO SCALE

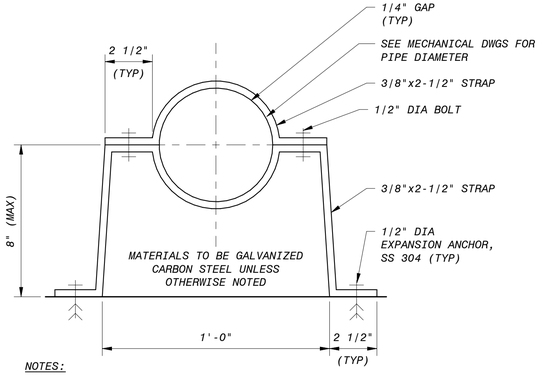

NOTES:

1. FOR AERATION AND ODOR CONTROL PIPE SUPPORTS, MATERIAL SHALL BE STAINLESS STEEL.
2. SEE SADDLE HANGER PIPE SUPPORT FOR DIMENSIONS.
3. SEE ANCHORAGE IN CONCRETE AND MASONRY SECTION FOR ANCHOR PRODUCTS.

E VERTICAL PIPE GUIDE SUPPORT

NO SCALE

NO.	BY	CHK	APP
0	KEZ	RWF	EVB

REVISIONS AND RECORD OF USE

ISSUED FOR CONSTRUCTION 5/19/2020

DATE

REGISTERED PROFESSIONAL ENGINEER
ERICK V. BEVINGTON
No. C 78836
CIVIL
STATE OF CALIFORNIA
5/20/2020

BLACK & VEATCH
JOINT VENTURE
BLACK & VEATCH
FILANC

CITY OF MORRO BAY
MORRO BAY WATER RECLAMATION FACILITY (WRF)

GENERAL
STRUCTURAL
STANDARD DETAILS

DESIGNED: KEZ, EVB
DETAILED: JPS
CHECKED: EVB
APPROVED: EVB
DATE: 5/19/2020

0 1/2 1

IF THIS BAR DOES NOT MEASURE 1" THEN DRAWING IS NOT TO FULL SCALE

PROJECT NO. 400530

00-M-602

SHEET 36 OF 412

PLOTTED: 5/14/2020 4:00:32 PM
D400530

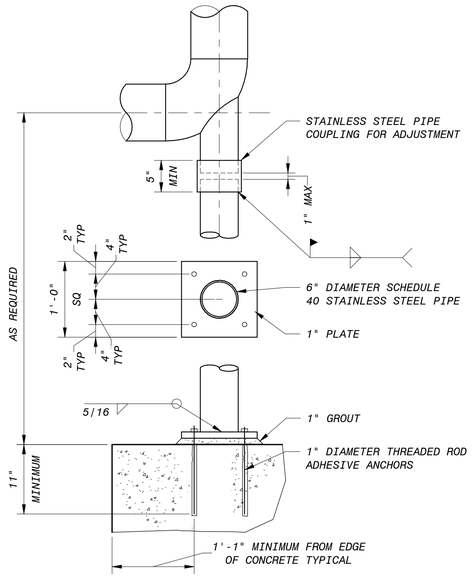

A ELBOW SUPPORT
NO SCALE

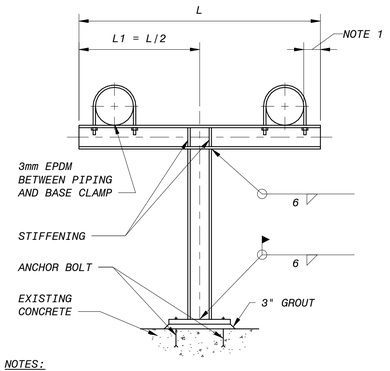

B TEE SUPPORT
NO SCALE

NOTES:

1. MINIMUM DISTANCE FROM EDGE OF THE BEAM TO THE PIPE IS 2".
2. PIPE SUPPORT CAN BE USED WITH ONE OR TWO PIPE ON THE TOP OF THE I-BEAM.
3. PVC OR CPVC PIPE REQUIRES A GAP OF 3mm MINIMUM FOR ALLOWING PIPING EXPANSION AND CONTRACTION.

NO.	BY	CHK	APP
0	KEZ	RWF	EVB

ISSUED FOR CONSTRUCTION
REVISIONS AND RECORD OF USE
DATE 5/19/2020

REGISTERED PROFESSIONAL ENGINEER
ERICK V. BEVINGTON
No. C 78836
CIVIL
STATE OF CALIFORNIA
5/20/2020

BLACK & VEATCH
JOINT VENTURE
BLACK & VEATCH
FILANC

CITY OF MORRO BAY
MORRO BAY WATER
RECLAMATION FACILITY (WRF)

GENERAL
STRUCTURAL
STANDARD DETAILS

DESIGNED: KEZ, EVB
DETAILED: JPS
CHECKED: EVB
APPROVED: EVB
DATE: 5/19/2020

0 1/2 1
IF THIS BAR DOES NOT MEASURE 1" THEN DRAWING IS NOT TO FULL SCALE

PROJECT NO.
400530

00-M-603
SHEET
37 OF 412

PLOTTED: 5/19/2020 4:09:31 PM
D400530

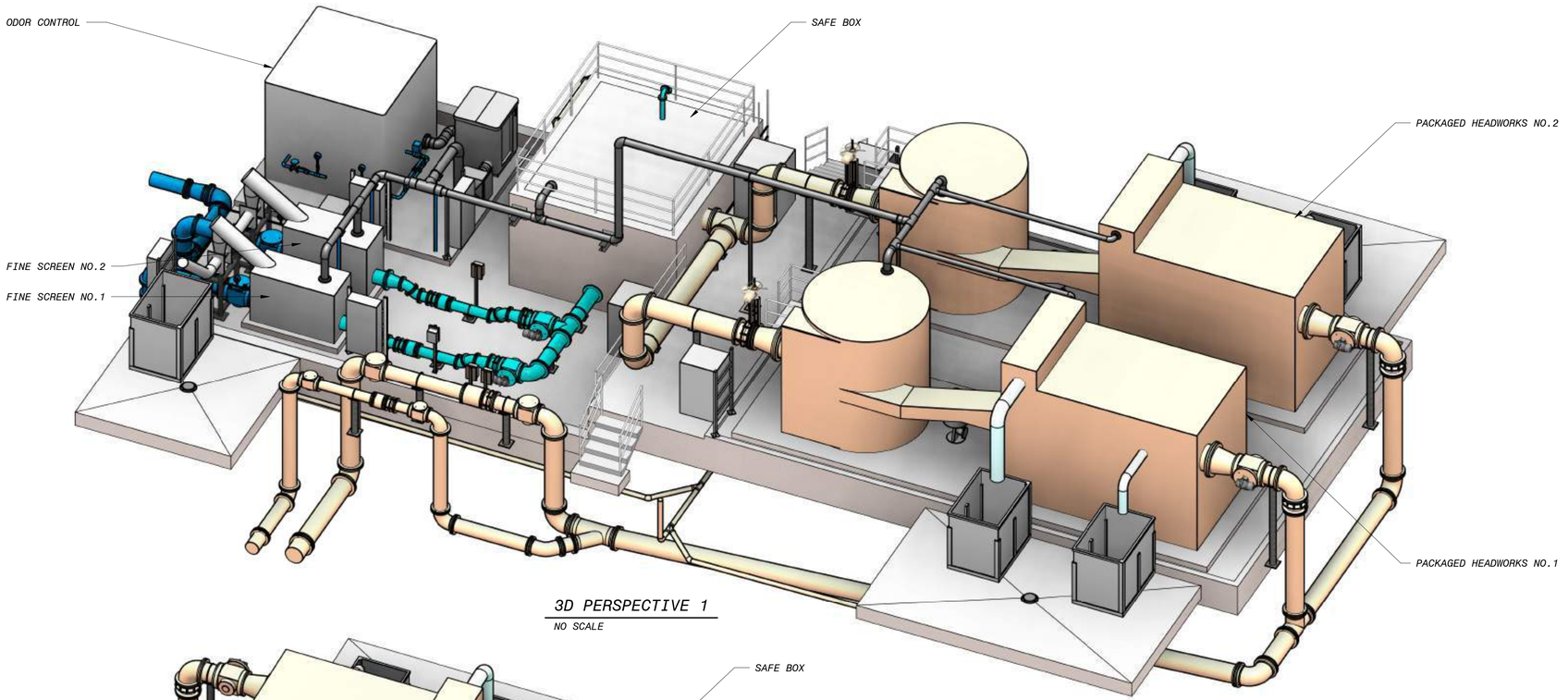

3D PERSPECTIVE 1

NO SCALE

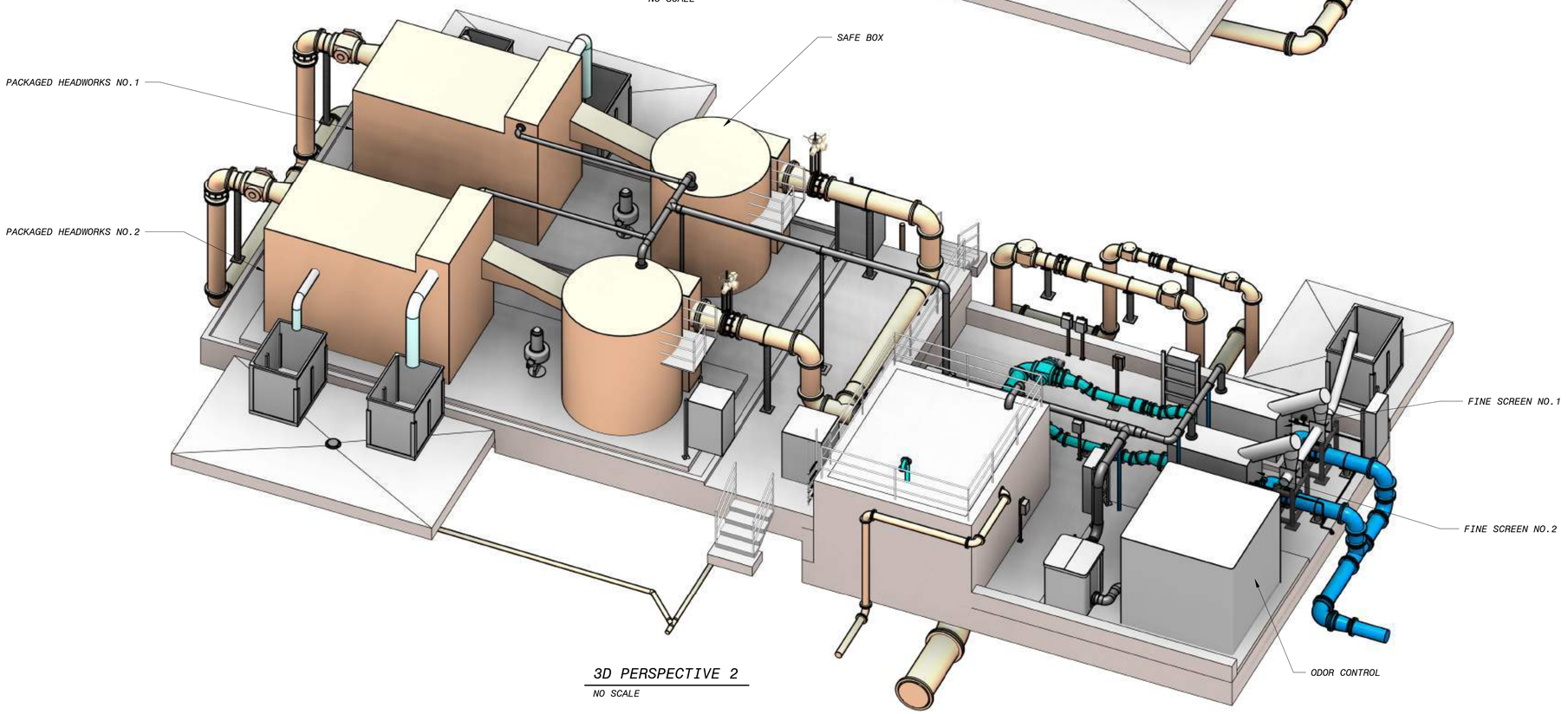

3D PERSPECTIVE 2

NO SCALE

NO.	BY	CHK	APP
0	KEZ	RWF	EVB

REVISIONS AND RECORD OF USE

ISSUED FOR CONSTRUCTION 5/19/2020

DATE

REGISTERED PROFESSIONAL ENGINEER
ERICK V. BEVINGTON
No. C 78836
CIVIL
STATE OF CALIFORNIA
5/20/2020

BLACK & VEATCH
JOINT VENTURE
BLACK & VEATCH
FILANC

CITY OF MORRO BAY
MORRO BAY WATER
RECLAMATION FACILITY (WRF)

HEADWORKS AREA - OVERALL
CIVIL-MECHANICAL
3D VIEWS

DESIGNED: KEZ, EVB
DETAILED: MAK
CHECKED: EVB
APPROVED: EVB
DATE: 5/19/2020

0 1/2 1
IF THIS BAR DOES NOT MEASURE 1" THEN DRAWING IS NOT TO FULL SCALE

PROJECT NO.
400530

20-M-001
SHEET
38 OF 412

PLOTTED: 5/19/2020 3:05:01 PM
D400530

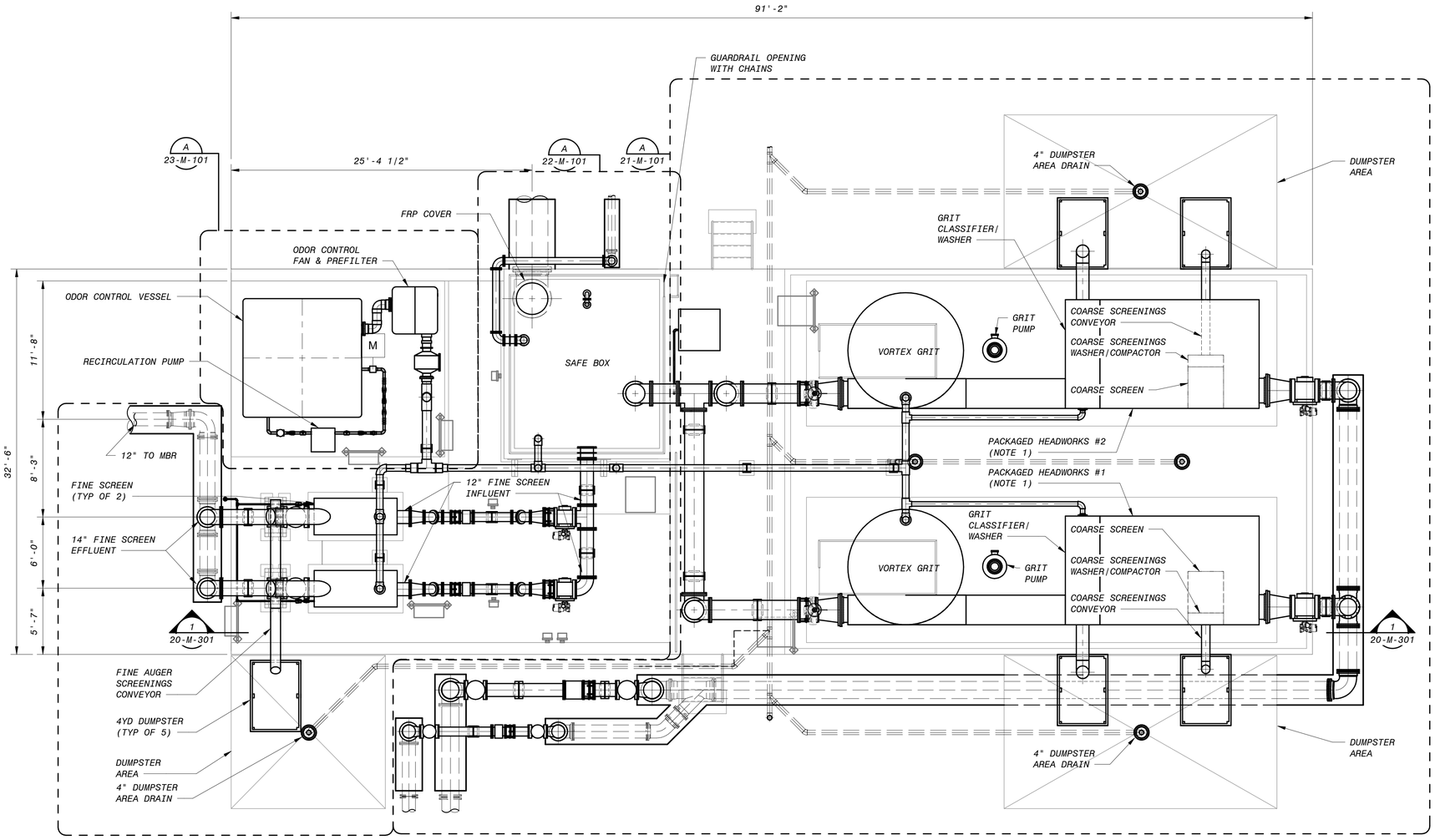

HEADWORKS AREA - OVERALL - OPERATING LEVEL PLAN

3/16" = 1'-0"

NOTES:

1. PACKAGE HEADWORKS LAYOUT IS VENDOR SPECIFIC. THIS LAYOUT WILL BY ADJUSTED WHEN HEADWORKS PACKAGE IS PROCURED.

NO.	BY	CHK	APP
0	KEZ	RWF	EVB

REVISIONS AND RECORD OF USE

ISSUED FOR CONSTRUCTION 5/19/2020

DATE

REGISTERED PROFESSIONAL ENGINEER
ERICK V. BEVINGTON
No. C 78836
CIVIL
STATE OF CALIFORNIA
5/20/2020

BLACK & VEATCH

JOINT VENTURE

BLACK & VEATCH

FILANC

CITY OF MORRO BAY
MORRO BAY WATER RECLAMATION FACILITY (WRF)

HEADWORKS AREA - OVERALL CIVIL-MECHANICAL OPERATING LEVEL PLAN

DESIGNED: KEZ, EVB
DETAILED: MAK
CHECKED: EVB
APPROVED: EVB
DATE: 5/19/2020

0 1/2 1

IF THIS BAR DOES NOT MEASURE 1" THEN DRAWING IS NOT TO FULL SCALE

PROJECT NO. 400530

20-M-101

SHEET 39 OF 412

6" 4' 2' 0' 5' 10'

3/16" = 1'-0"

PLOTTED: 5/19/2020 3:05:08 PM
D400530

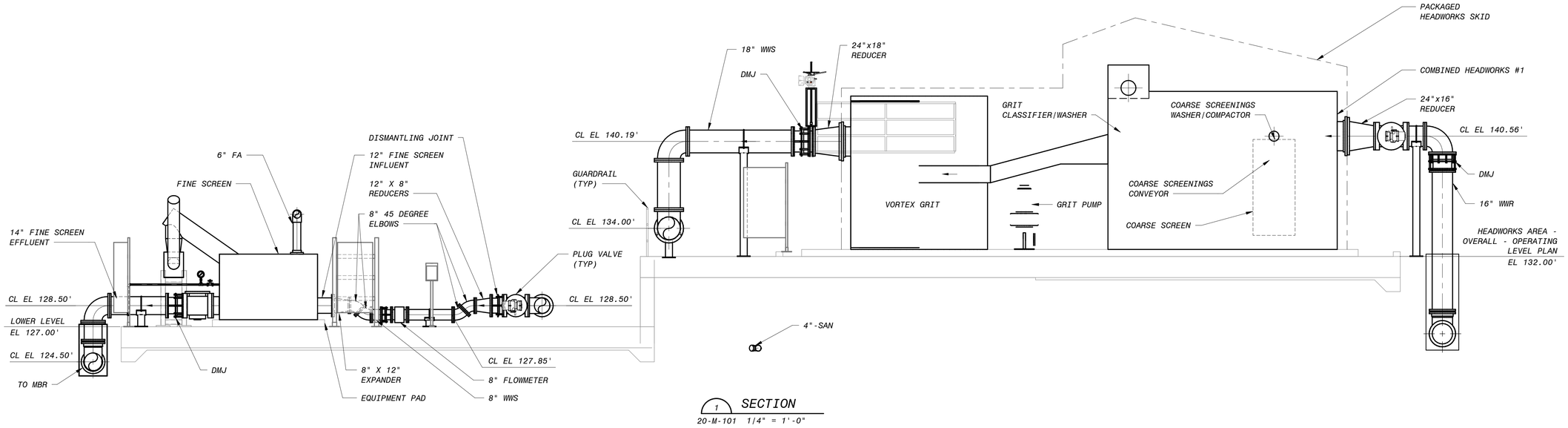

1 SECTION
20-M-101 1/4" = 1'-0"

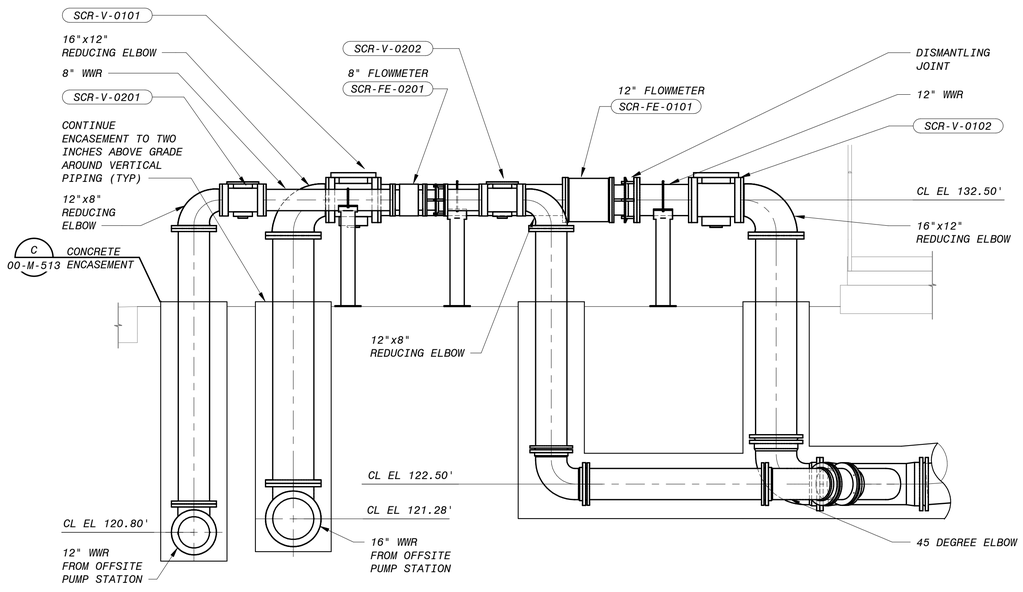

2 SECTION
21-M-101 3/8" = 1'-0"

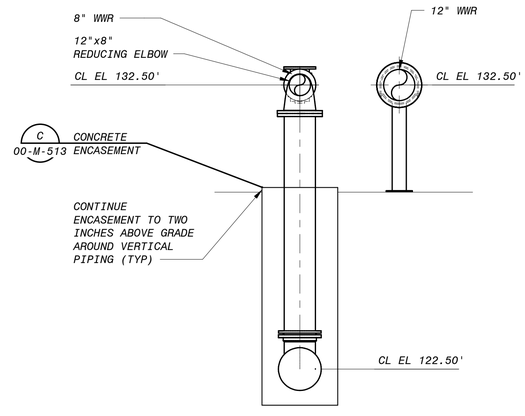

3 SECTION
21-M-101 3/8" = 1'-0"

4' 2' 0' 4' 8'
1/4" = 1'-0"

12" 0' 1' 2' 3' 4' 5' 6' 7'
3/8" = 1'-0"

NO.	BY	CHK	APP
0	KEZ	RWF	EVB

REVISIONS AND RECORD OF USE

ISSUED FOR CONSTRUCTION 5/19/2020

DATE

REGISTERED PROFESSIONAL ENGINEER
ERICK V. BEVINGTON
No. C 78836
CIVIL
STATE OF CALIFORNIA
5/20/2020

BLACK & VEATCH
JOINT VENTURE
BLACK & VEATCH
FILANC

CITY OF MORRO BAY
MORRO BAY WATER
RECLAMATION FACILITY (WRF)

HEADWORKS AREA - OVERALL
CIVIL-MECHANICAL
SECTIONS

DESIGNED: KEZ, EVB
DETAILED: MAK
CHECKED: EVB
APPROVED: EVB
DATE: 5/19/2020

0 1/2 1
IF THIS BAR DOES NOT MEASURE 1" THEN DRAWING IS NOT TO FULL SCALE

PROJECT NO.
400530

20-M-301
SHEET
40 OF 412

PLOTTED: 5/19/2020 3:05:12 PM
D400530

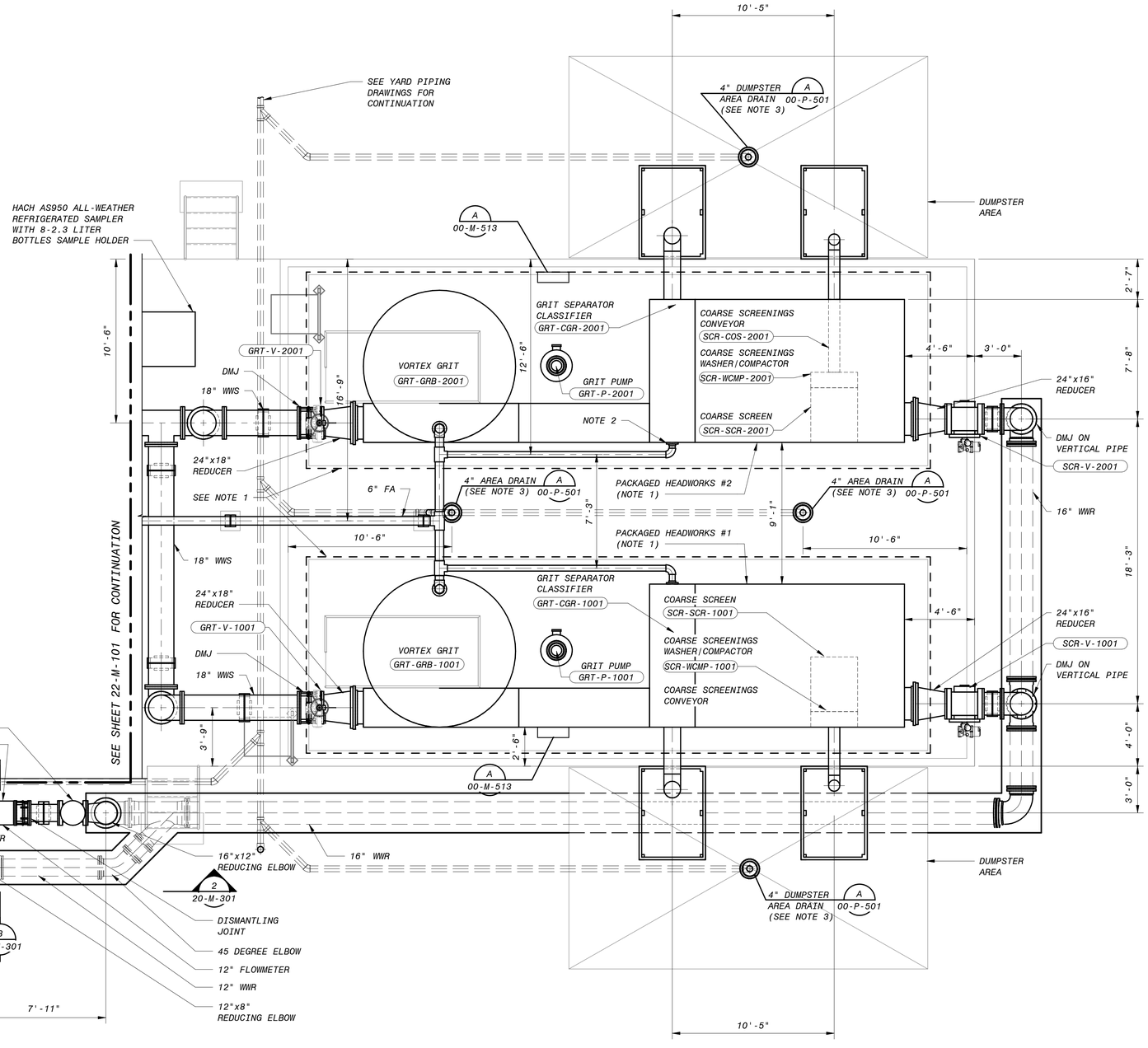

A 20-M-101 HEADWORKS AREA - HEADWORKS - PLAN
1/4" = 1'-0"

4' 2' 0' 4' 8'
1/4" = 1'-0"

NOTES:

1. THE BOUNDARY SHOWN FOR PACKAGED HEADWORKS SYSTEMS REPRESENTS THE AVAILABLE SPACE FOR THE PACKAGED HEADWORKS SYSTEMS SUPPLIER TO PROVIDE THEIR SYSTEMS THAT MEET THE SPECIFICATION REQUIREMENTS. THE SYSTEM SHOWN ON THE DRAWINGS WILL BE ADJUSTED TO MATCH THE SELECTED PACKAGED HEADWORKS SYSTEM SUPPLIER'S PROPOSED DESIGN.
2. ODOR CONTROL FLANGED CONNECTION POINTS TO BE DETERMINED WITH SHOP DRAWING SUBMITTALS FROM HEADWORKS SYSTEM SUPPLIER.
3. FOR ALL OUTDOOR AREA DRAINS, IT IS ASSUMED THESE WILL BE COVERED WITH MATS DURING RAIN STORMS. THE PLANT SEWER SYSTEM IS NOT DESIGNED TO HANDLE RAIN FLOW.

NO.	BY	CHK	APP	DATE	REVISIONS AND RECORD OF USE
0	KEZ	RWF	EVB	5/19/2020	ISSUED FOR CONSTRUCTION

REGISTERED PROFESSIONAL ENGINEER
ERICK V. BEVINGTON
No. C 78836
CIVIL
STATE OF CALIFORNIA
5/20/2020

BLACK & VEATCH
JOINT VENTURE
BLACK & VEATCH
FILANC

CITY OF MORRO BAY
MORRO BAY WATER
RECLAMATION FACILITY (WRF)

HEADWORKS AREA - HEADWORKS
CIVIL-MECHANICAL
PLAN

DESIGNED: KEZ, EVB
DETAILED: MAK
CHECKED: EVB
APPROVED: EVB
DATE: 5/19/2020

0 1/2 1
IF THIS BAR DOES NOT MEASURE 1" THEN DRAWING IS NOT TO FULL SCALE

PROJECT NO.
400530

21-M-101
SHEET
41 OF 412

PLOTTED: 5/19/2020 3:05:16 PM
D400530

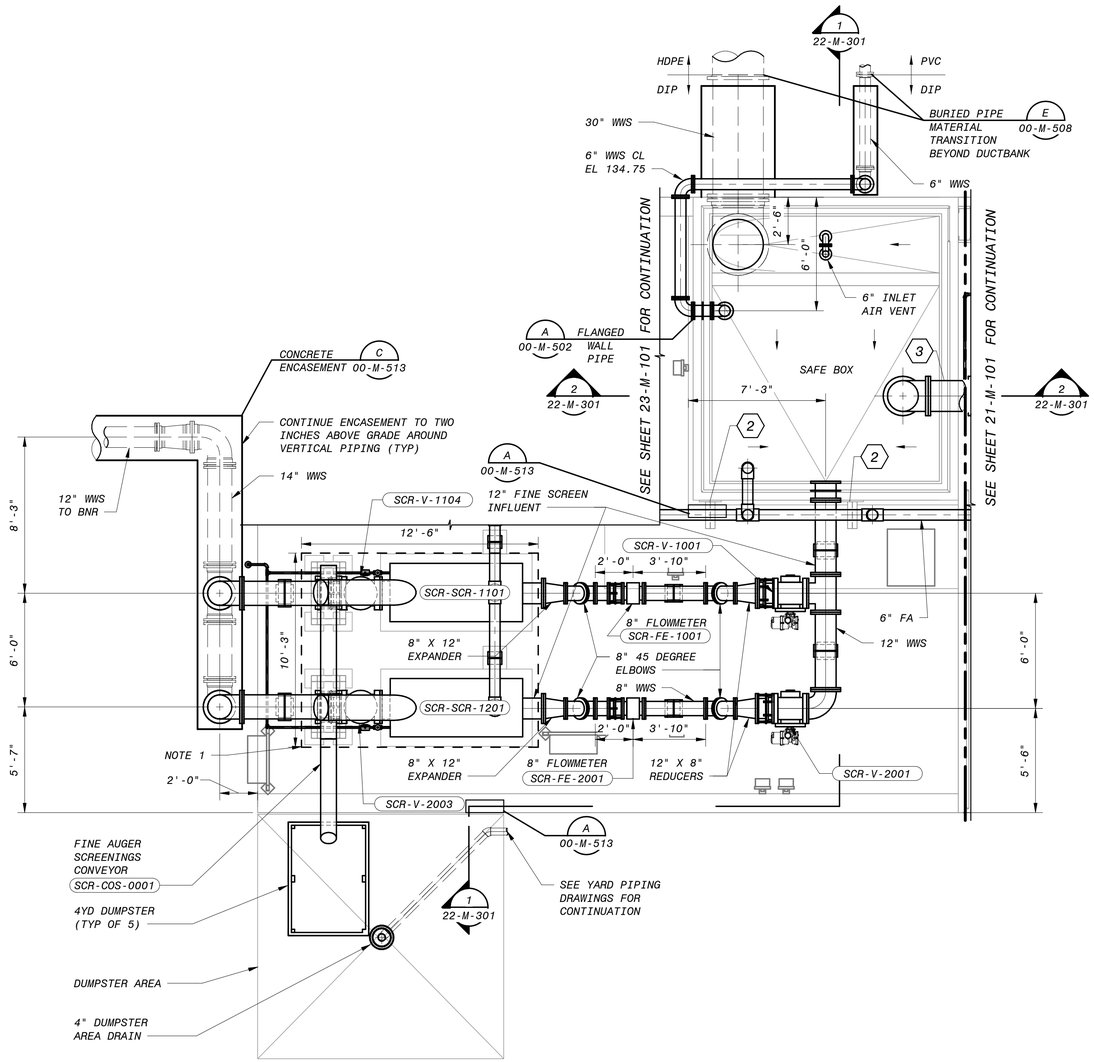

A HEADWORKS AREA - FINE SCREENS - PLAN
20-M-101 1/4" = 1'-0"

NOTES:

1. DIMENSIONS SHOWN INDICATE AVAILABLE SPACE FOR ALL FINE SCREEN EQUIPMENT.

KEY NOTES:

1. COLUMN PIPE SUPPORT. SEE DETAIL A ON 00-M-601
2. KNEE BRACE GUIDE SUPPORT. SEE DETAIL B ON 00-M-602
3. FLANGED WALL PIPE. SEE DETAIL B ON 00-M-502

4' 2' 0' 4' 8'
1/4" = 1'-0"

NO.	BY	CHK	APP
0	KEZ	RWF	EVB

REVISIONS AND RECORD OF USE

ISSUED FOR CONSTRUCTION 5/19/2020

DATE

REGISTERED PROFESSIONAL ENGINEER
ERICK V. BEVINGTON
No. C 78836
CIVIL
STATE OF CALIFORNIA
5/20/2020

BLACK & VEATCH
JOINT VENTURE
FILANC
BLACK & VEATCH

CITY OF MORRO BAY
MORRO BAY WATER RECLAMATION FACILITY (WRF)

HEADWORKS AREA - FINE SCREENS
CIVIL-MECHANICAL PLAN

DESIGNED: KEZ, EVB
DETAILED: MAK
CHECKED: EVB
APPROVED: EVB
DATE: 5/19/2020

0 1/2 1
IF THIS BAR DOES NOT MEASURE 1" THEN DRAWING IS NOT TO FULL SCALE

PROJECT NO.
400530

22-M-101
SHEET
42 OF 412

PLOTTED: 5/19/2020 3:05:19 PM
D400530

NOTES:

1. ODOR CONTROL LAYOUT IS FOR REFERENCE ONLY. FINAL LAYOUT AND COMPONENTS WILL BE SHOWN AFTER EQUIPMENT IS PROCURED.
2. NOTE THAT THE FOUL AIR PIPING ROUTE IS FLEXIBLE AND DEPENDENT ON FINAL PROCUREMENT DESIGN OF THE ODOR CONTROL SYSTEM, FINAL SIZING OF THE FINE SCREENS, AND FINAL SIZING OF THE HEADWORKS PACKAGE.

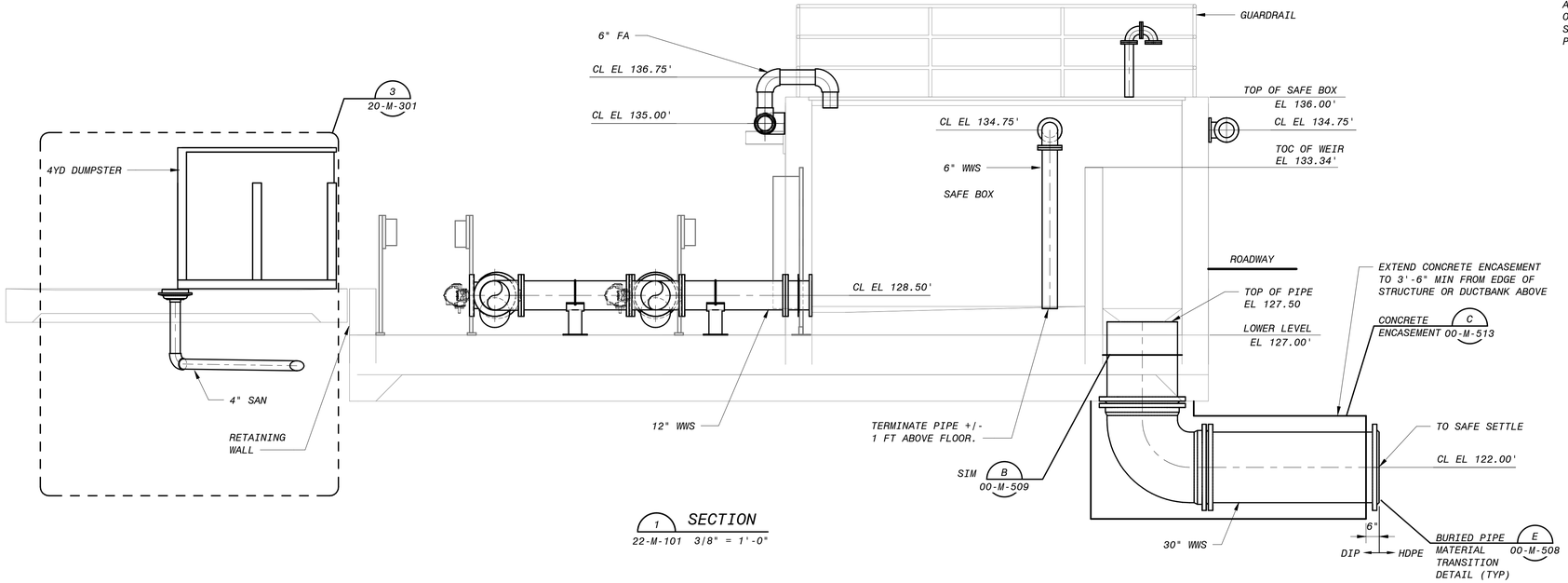

1 SECTION
22-M-101 3/8" = 1'-0"

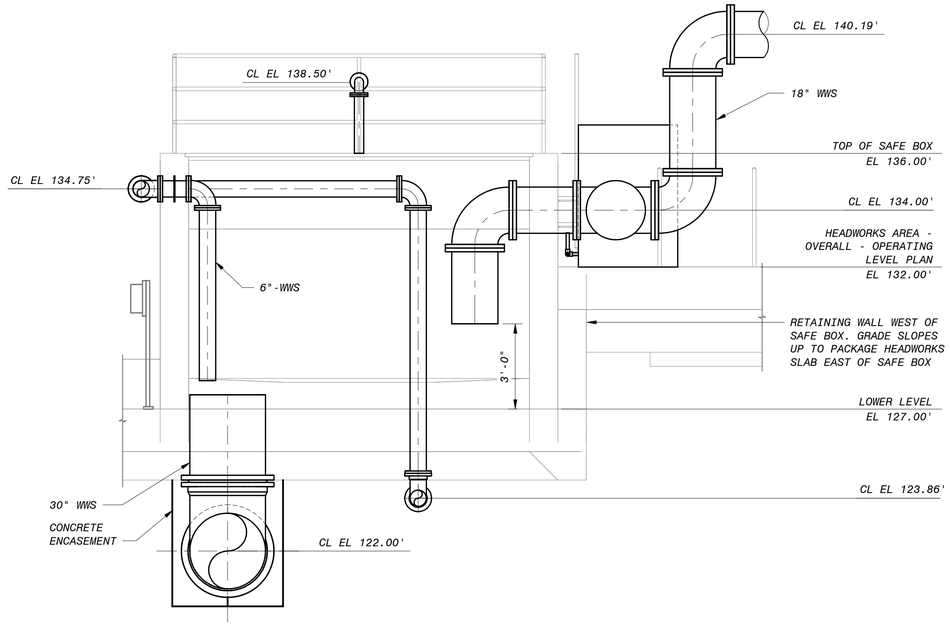

2 SECTION
22-M-101 3/8" = 1'-0"

12" 0' 1' 2' 3' 4' 5' 6' 7'
3/8" = 1'-0"

NO.	BY	CHK	APP'D	DATE	REVISIONS AND RECORD OF USE
0	KEZ	RWF	EVB	5/19/2020	ISSUED FOR CONSTRUCTION

REGISTERED PROFESSIONAL ENGINEER
ERICK V. BEVINGTON
No. C 78836
CIVIL
STATE OF CALIFORNIA
5/20/2020

BLACK & VEATCH
JOINT VENTURE
BLACK & VEATCH
FILANC

CITY OF MORRO BAY
MORRO BAY WATER
RECLAMATION FACILITY (WRF)

HEADWORKS AREA - FINE SCREENS
CIVIL-MECHANICAL
SECTIONS AND DETAILS 1

DESIGNED: KEZ, EVB
DETAILED: MAK
CHECKED: EVB
APPROVED: EVB
DATE: 5/19/2020

0 1/2 1
IF THIS BAR DOES NOT MEASURE 1" THEN DRAWING IS NOT TO FULL SCALE

PROJECT NO.
400530

22-M-301
SHEET
43 OF 412

PLOTTED: 5/19/2020 3:05:24 PM
D400530

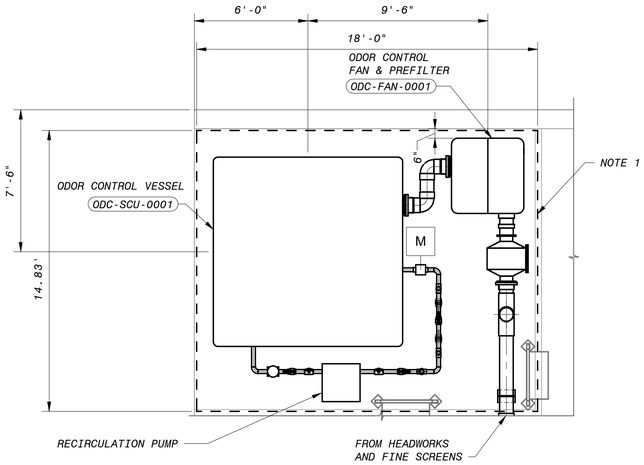

HEADWORKS AREA - ODOR CONTROL - PLAN

1/4" = 1'-0"

NOTES:

1. ODOR CONTROL LAYOUT IS FOR REFERENCE ONLY. FINAL LAYOUT AND COMPONENTS WILL BE SHOWN AFTER EQUIPMENT IS PROCURED.
2. DIMENSIONS SHOWN INDICATE AVAILABLE SPACE FOR ALL ODOR CONTROL EQUIPMENT, INCLUDING ELECTRICAL AND CONTROL PANELS.

4' 2' 0' 4' 8'

1/4" = 1'-0"

NO.	BY	CHK	APP
0	KEZ	RWF	EVB

DATE	REVISIONS AND RECORD OF USE
5/19/2020	ISSUED FOR CONSTRUCTION

REGISTERED PROFESSIONAL ENGINEER
ERICK V. BEVINGTON
No. C 78836
CIVIL
STATE OF CALIFORNIA
5/20/2020

BLACK & VEATCH JOINT VENTURE
BLACK & VEATCH
FILANC

CITY OF MORRO BAY
MORRO BAY WATER
RECLAMATION FACILITY (WRF)

HEADWORKS AREA - ODOR CONTROL
CIVIL-MECHANICAL
PLAN, SECTIONS AND DETAILS

DESIGNED: KEZ, EVB
DETAILED: MAK
CHECKED: EVB
APPROVED: EVB
DATE: 5/19/2020

0 1/2 1
IF THIS BAR DOES NOT MEASURE 1" THEN DRAWING IS NOT TO FULL SCALE

PROJECT NO.
400530

23-M-101
SHEET
44 OF 412

PLOTTED: 5/19/2020 3:05:27 PM
D400530

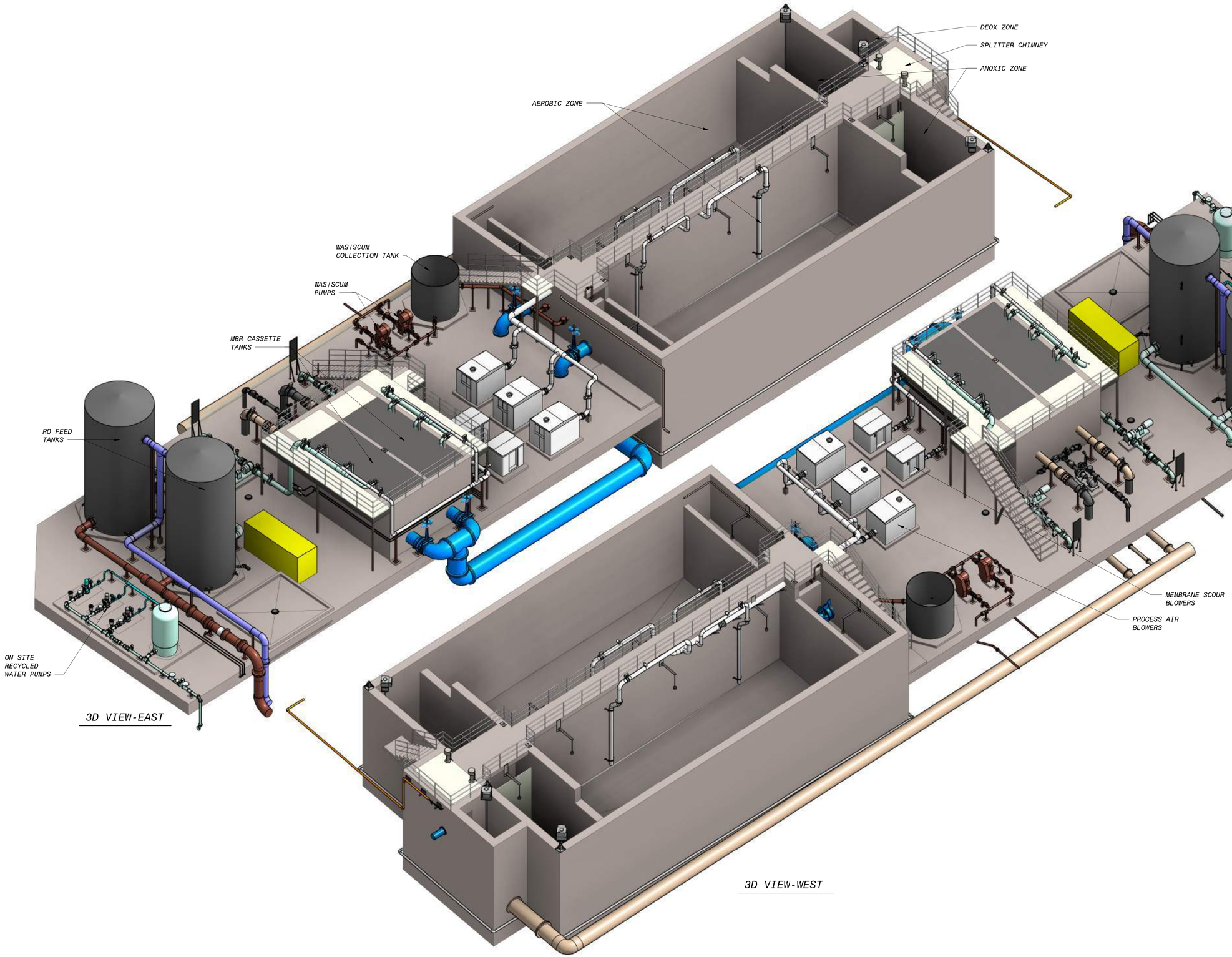

3D VIEW-EAST

3D VIEW-WEST

NO.	BY	CHK	APP'D
0	KEZ	RWF	EVB

REVISIONS AND RECORD OF USE

ISSUED FOR CONSTRUCTION 5/19/2020

DATE

REGISTERED PROFESSIONAL ENGINEER
KATHRYN ELIZABETH MAK
C-83441
CIVIL
STATE OF CALIFORNIA
5/19/20

BLACK & VEATCH JOINT VENTURE

BLACK & VEATCH

FILANC

CITY OF MORRO BAY
MORRO BAY WATER RECLAMATION FACILITY (WRF)

TREATMENT AREA - OVERALL
CIVIL-MECHANICAL
3D VIEWS

DESIGNED: KEZ, EVB
DETAILED: MAK
CHECKED: EVB
APPROVED: EVB
DATE: 5/19/2020

0 1/2 1

IF THIS BAR DOES NOT MEASURE 1" THEN DRAWING IS NOT TO FULL SCALE

PROJECT NO.
400530

30-M-001

SHEET
45 OF 412

PLOTTED: 5/19/2020 2:40:46 PM
D400530

NOTES:

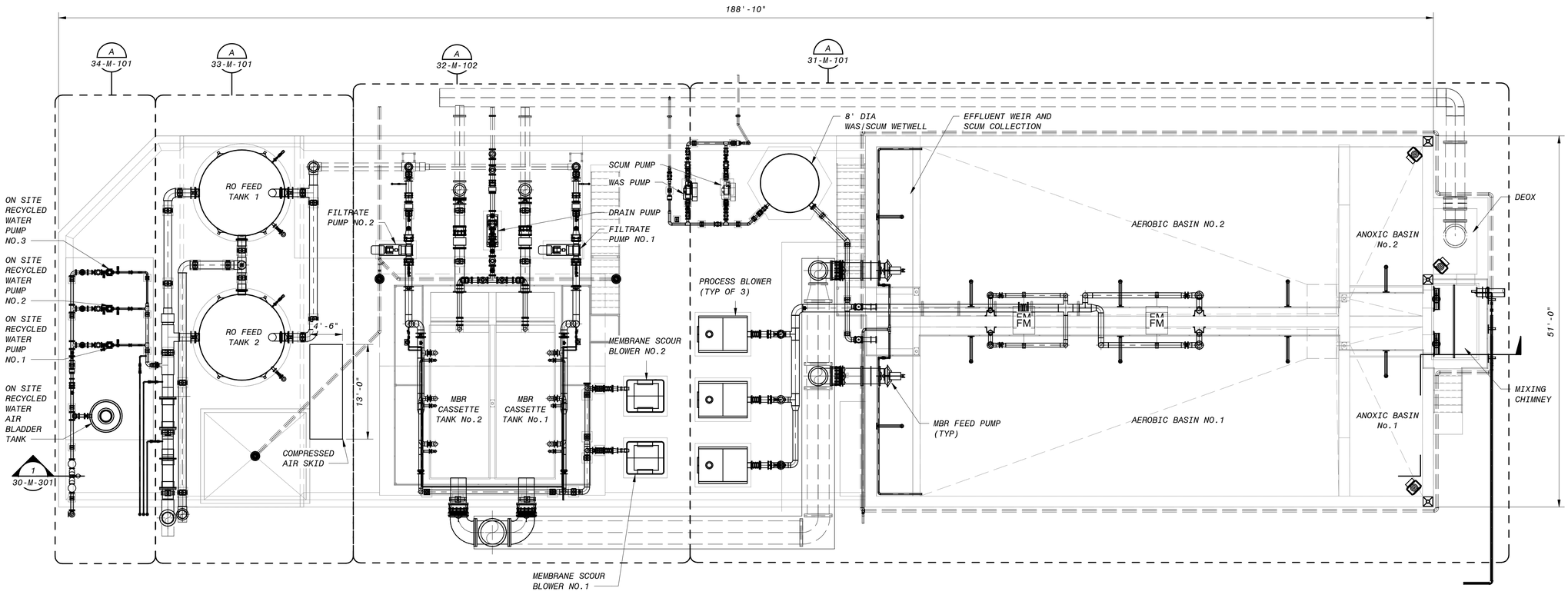

TREATMENT AREA - OVERALL - OPERATING LEVEL PLAN

1/8" = 1'-0"

8' 4' 0' 8' 16'

1/8" = 1'-0"

NO.	BY	CHK	APP
0	KEZ	RWF	EVB

REVISIONS AND RECORD OF USE

5/19/2020 ISSUED FOR CONSTRUCTION

DATE

REGISTERED PROFESSIONAL ENGINEER
KATHRYN ELIZABETH KUSY
C-83441
CIVIL
STATE OF CALIFORNIA
5/19/20

BLACK & VEATCH JOINT VENTURE
BLACK & VEATCH
FILANC

CITY OF MORRO BAY
MORRO BAY WATER RECLAMATION FACILITY (WRF)

TREATMENT AREA - OVERALL
CIVIL-MECHANICAL
OPERATING LEVEL PLAN

DESIGNED: KEZ, EVB
DETAILED: MAK
CHECKED: EVB
APPROVED: EVB
DATE: 5/19/2020

0 1/2 1
IF THIS BAR DOES NOT MEASURE 1" THEN DRAWING IS NOT TO FULL SCALE

PROJECT NO.
400530

30-M-101
SHEET
46 OF 412

PLOTTED: 5/19/2020 2:40:49 PM
D400530

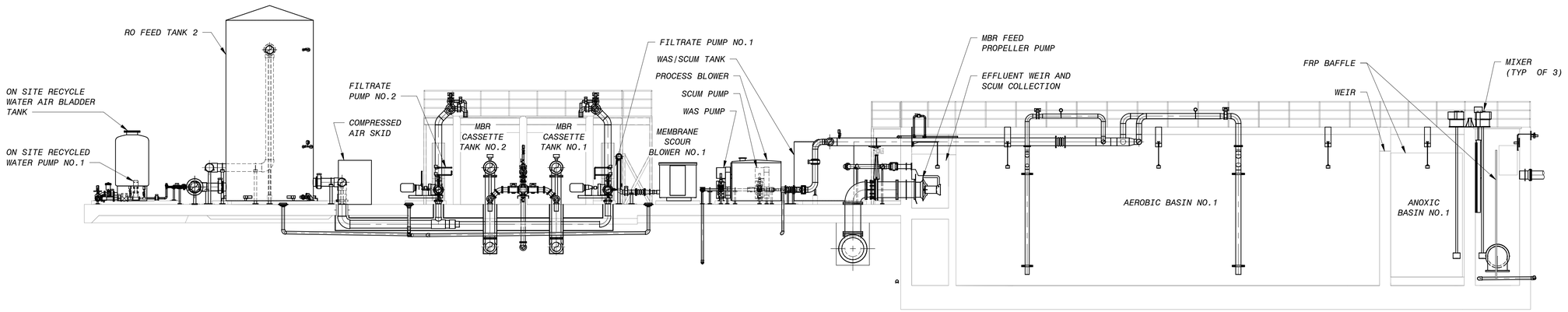

1 SECTION
30-M-101 1/8" = 1'-0"

8' 4' 0' 8' 16'
1/8" = 1'-0"

NO.	BY	CHK	APP'D
0	KEZ	RWF	EVB

DATE	REVISIONS AND RECORD OF USE
5/19/2020	ISSUED FOR CONSTRUCTION

REGISTERED PROFESSIONAL ENGINEER
KATHRYN ELIZABETH ZUSY
C-83441
CIVIL
STATE OF CALIFORNIA
5/19/20

BLACK & VEATCH
JOINT VENTURE
FILANC
BLACK & VEATCH

CITY OF MORRO BAY
MORRO BAY WATER
RECLAMATION FACILITY (WRF)

TREATMENT AREA - OVERALL
CIVIL-MECHANICAL
SECTION

DESIGNED: KEZ, EVB
DETAILED: MAK
CHECKED: EVB
APPROVED: EVB
DATE: 5/19/2020

0 1/2 1
IF THIS BAR DOES NOT MEASURE 1" THEN DRAWING IS NOT TO FULL SCALE

PROJECT NO.
400530

30-M-301
SHEET
47 OF 412

PLOTTED: 5/19/2020 2:40:57 PM
D400530

KEY NOTES:

1. ELBOW SUPPORT. SEE DETAIL A ON 00-M-603
2. COLUMN GUIDE SUPPORT. SEE DETAIL A ON 00-M-602
3. FLANGED WALL ANCHOR. SEE DETAIL B ON 00-M-502
4. WELDED TEE
5. BASIN STANCHION GUIDE SUPPORT. SEE DETAIL C ON 00-M-602
6. MODULAR CASING SEAL BEAM SLEEVE. SEE DETAIL C ON 00-M-506
7. KNEE BRACE GUIDE SUPPORT. SEE DETAIL B ON 00-M-602
8. KNEE BRACE AXIAL STOP SUPPORT. SEE DETAIL D ON 00-M-602

NOTES:

1. SPRAY BARS: 10 GPM PER TRAIN. SPEC FULLJET GG NOZZLES 1/8" INLET 3.5 OR 5 GPM CAPACITY. CAN DO 316 SS OR PVC.
2. SEE 31-M-102 FOR CONTINUATION.
3. ALL BLOWER AIR PIPING SHALL BE INSULATED IF IT IS 8 FEET OR LESS ABOVE FINISHED FLOOR OR ACCESS WALKWAYS.

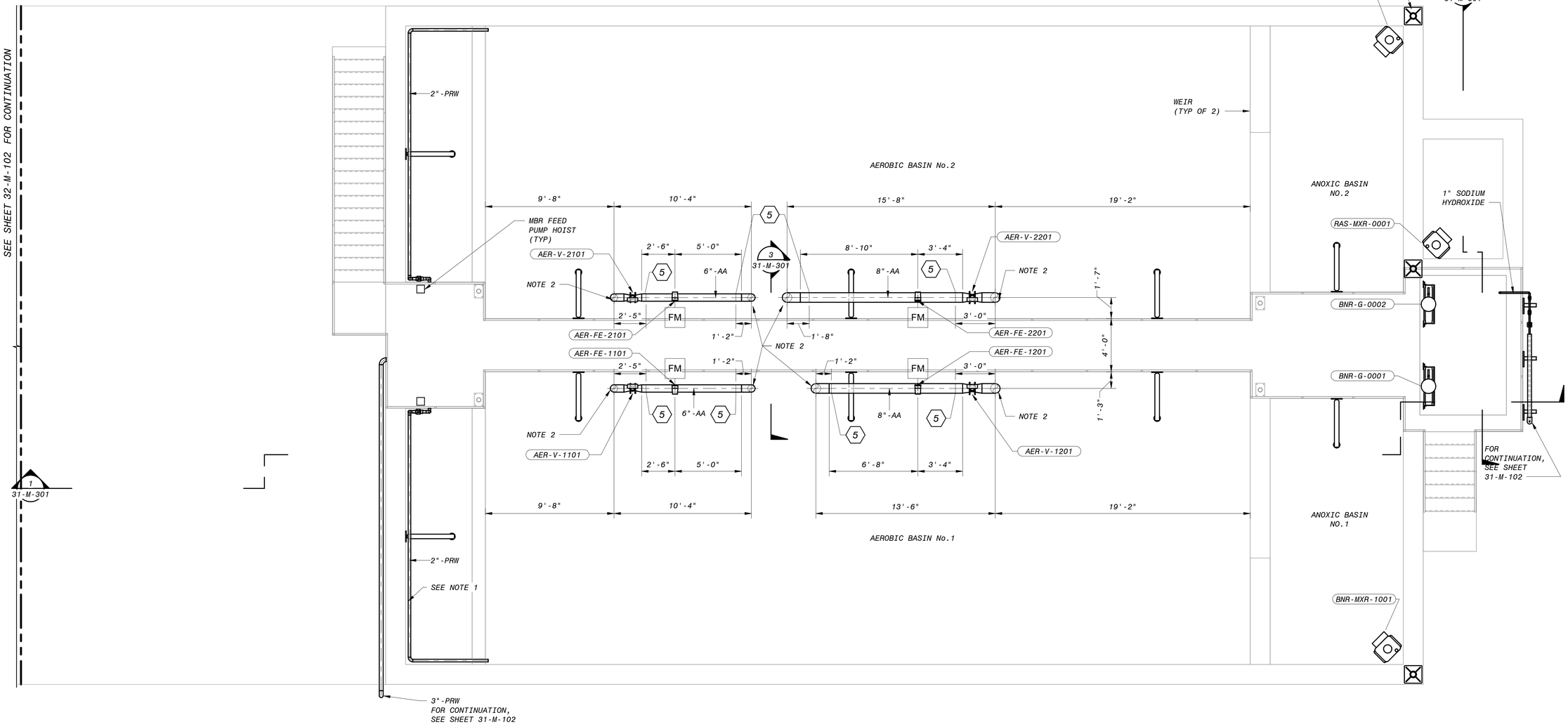

A BNR BASINS - UPPER LEVEL PLAN
30-M-101 1/4" = 1'-0"

4' 2' 0' 4' 8'
1/4" = 1'-0"

NO.	BY	CHK	APP
0	KEZ	RWF	EVB

DATE	REVISIONS AND RECORD OF USE
5/19/2020	ISSUED FOR CONSTRUCTION

REGISTERED PROFESSIONAL ENGINEER
KATHRYN ELIZABETH MAY
C-83441
CIVIL
STATE OF CALIFORNIA
5/19/20

BLACK & VEATCH JOINT VENTURE
BLACK & VEATCH
FILANC

CITY OF MORRO BAY
MORRO BAY WATER RECLAMATION FACILITY (WRF)

TREATMENT AREA - BNR BASINS
CIVIL-MECHANICAL
UPPER LEVEL PLAN

DESIGNED: KEZ, EVB
DETAILED: MAK
CHECKED: EVB
APPROVED: EVB
DATE: 5/19/2020

0 1/2 1
IF THIS BAR DOES NOT MEASURE 1" THEN DRAWING IS NOT TO FULL SCALE

PROJECT NO.
400530

31-M-101
SHEET
48 OF 412

PLOTTED: 5/19/2020 2:40:59 PM
D400530

KEY NOTES:

1. BASIN STANCHION GUIDE SUPPORT. SEE DETAIL C ON 00-M-602
2. KNEE BRACE GUIDE SUPPORT. SEE DETAIL B ON 00-M-602
3. MODULAR CASING SEAL BEAM SLEEVE. SEE DETAIL C ON 00-M-506
4. KNEE BRACE AXIAL STOP SUPPORT. SEE DETAIL D ON 00-M-602
5. ELBOW SUPPORT. SEE DETAIL A ON 00-M-603
6. COLUMN GUIDE SUPPORT. SEE DETAIL A ON 00-M-602
7. FLANGED WALL ANCHOR. SEE DETAIL B ON 00-M-502
8. WELDED TEE

NOTES:

1. SPRAY BARS: 10 GPM PER TRAIN. SPEC FULLJET GG NOZZLES 1/8" INLET 3.5 OR 5 GPM CAPACITY. CAN DO 316 SS OR PVC.
2. SEE 31-M-101 FOR CONTINUATION.
3. SEE 31-M-103 FOR CONTINUATION.
4. THERE SHALL BE A MINIMUM OF 3.5' OF CLEAR SPACE AROUND EACH CONTROL PANEL.
5. ALL BLOWER AIR PIPING SHALL BE INSULATED IF IT IS 8 FEET OR LESS ABOVE FINISHED FLOOR OR ACCESS WALKWAYS.

SEE SHEET 32-M-102 FOR CONTINUATION

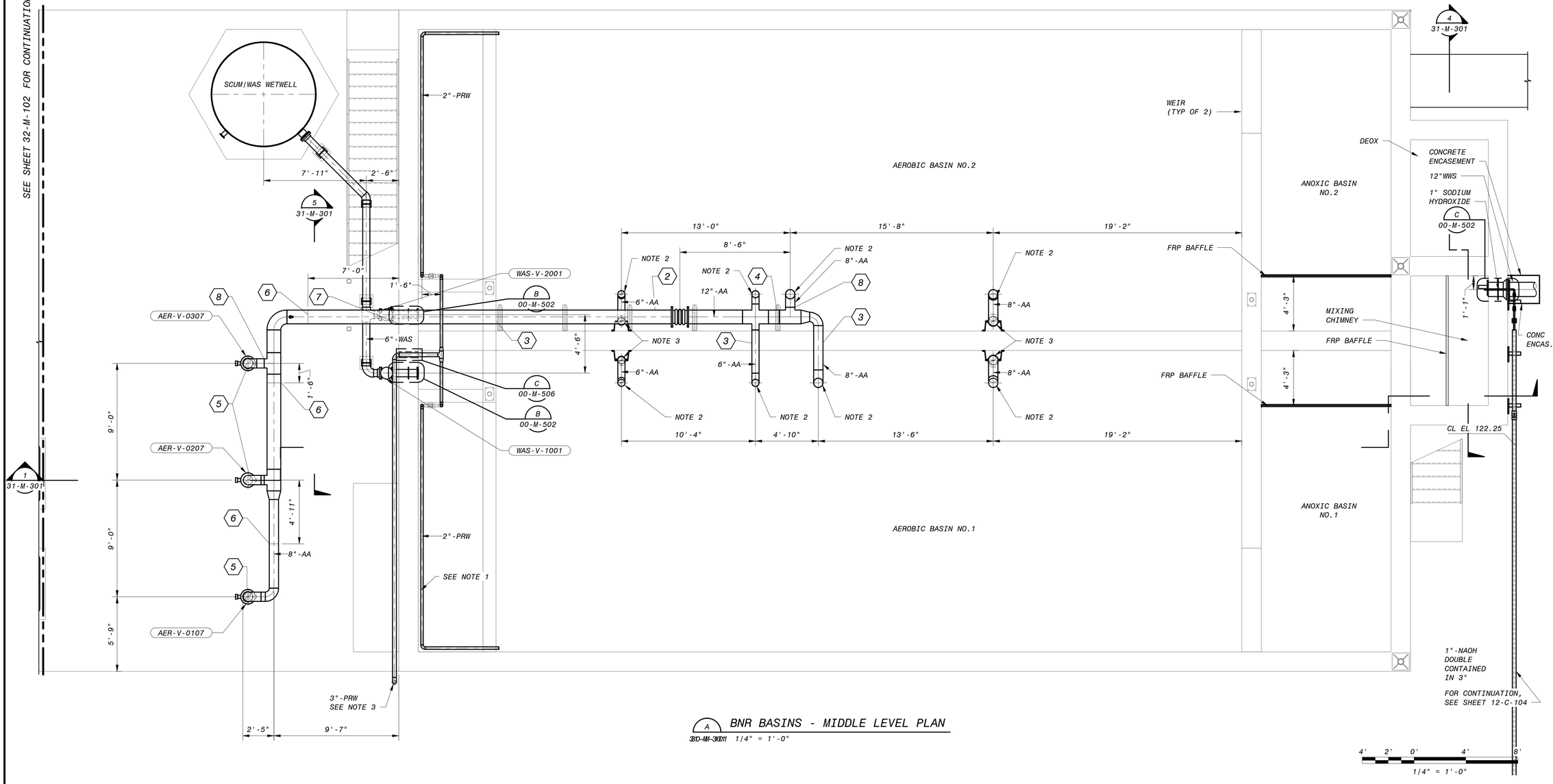

A BNR BASINS - MIDDLE LEVEL PLAN
31-M-301 1/4" = 1'-0"

NO.	BY	CHK	APP	DATE	REVISIONS AND RECORD OF USE
0	KEZ	RWF	EVB	5/19/2020	ISSUED FOR CONSTRUCTION

REGISTERED PROFESSIONAL ENGINEER
KATHRYN ELIZABETH ZUBY
C-83441
CIVIL
STATE OF CALIFORNIA
5/19/20

BLACK & VEATCH
JOINT VENTURE
BLACK & VEATCH
FILANC

CITY OF MORRO BAY
MORRO BAY WATER
RECLAMATION FACILITY (WRF)

TREATMENT AREA - BNR BASINS
CIVIL-MECHANICAL
MIDDLE LEVEL PLAN

DESIGNED: KEZ, EVB
DETAILED: MAK
CHECKED: EVB
APPROVED: EVB
DATE: 5/19/2020

0 1/2 1
IF THIS BAR DOES NOT MEASURE 1" THEN DRAWING IS NOT TO FULL SCALE

PROJECT NO.
400530

31-M-102
SHEET
49 OF 412

PLOTTED: 5/19/2020 2:41:00 PM
D400530

KEY NOTES:

1. BASIN STANCHION GUIDE SUPPORT. SEE DETAIL C ON 00-M-602
2. KNEE BRACE GUIDE SUPPORT. SEE DETAIL B ON 00-M-602
3. MODUALR CASING SEAL BEAM SLEEVE. SEE DETAIL C ON 00-M-506
4. KNEE BRACE AXIAL STOP SUPPORT. SEE DETAIL D ON 00-M-602
5. ELBOW SUPPORT. SEE DETAIL A ON 00-M-603
6. COLUMN GUIDE SUPPORT. SEE DETAIL A ON 00-M-602
7. FLANGED WALL ANCHOR. SEE DETAIL B ON 00-M-502

NOTES:

1. SPRAY BARS: 10 GPM PER TRAIN. SPEC FULLJET GG NOZZLES 1/8" INLET 3.5 OR 5 GPM CAPACITY. CAN DO 316 SS OR PVC.
2. SEE 31-M-102 FOR CONTINUATION.
3. ALL BLOWER AIR PIPING SHALL BE INSULATED IF IT IS 8 FEET OR LESS ABOVE FINISHED FLOOR OR ACCESS WALKWAYS.

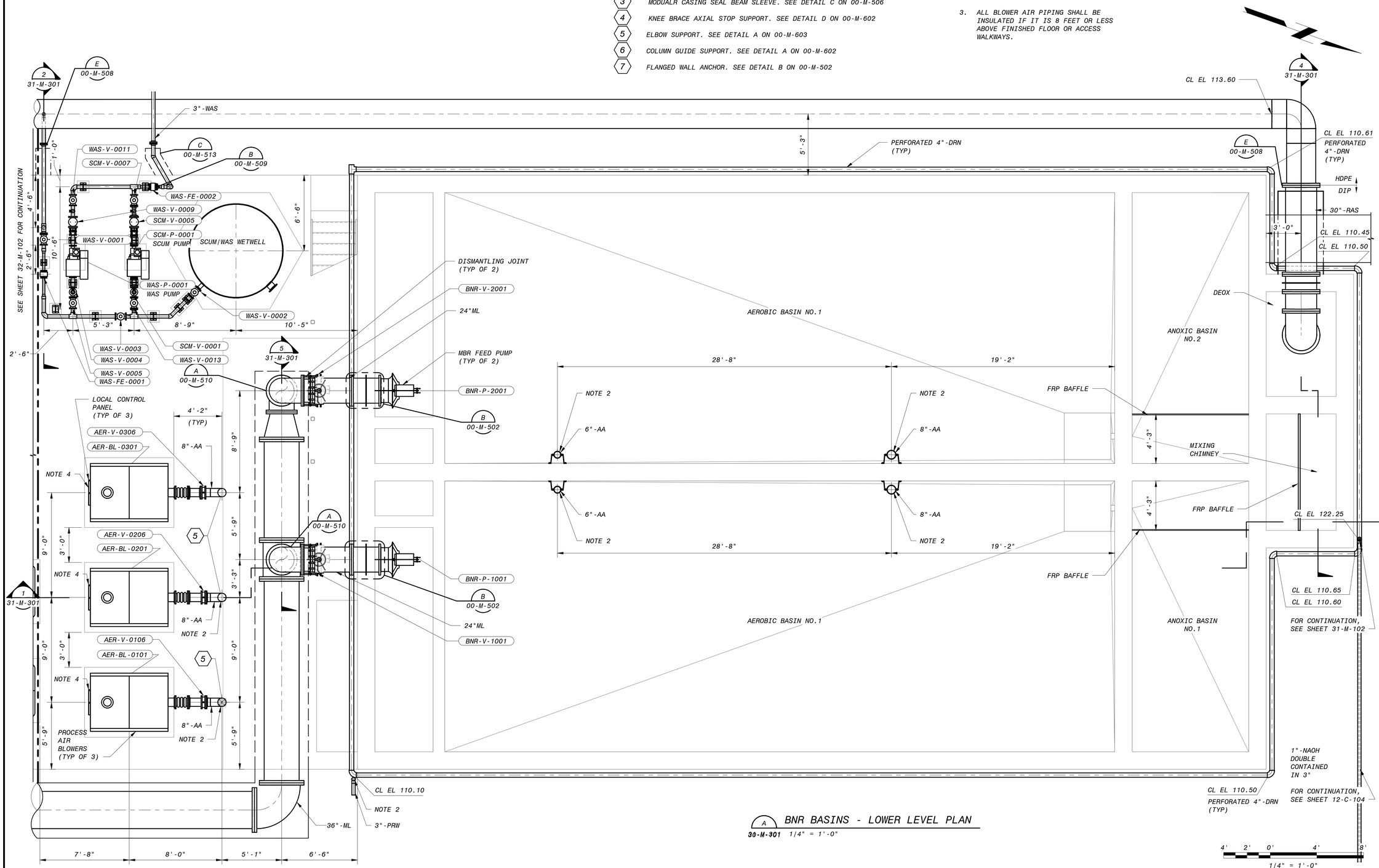

A BNR BASINS - LOWER LEVEL PLAN
30-M-301 1/4" = 1'-0"

NO.	BY	CHK	APP	DATE	REVISIONS AND RECORD OF USE
0	KEZ	RWF	EVB	5/19/2020	ISSUED FOR CONSTRUCTION

REGISTERED PROFESSIONAL ENGINEER KATHRYN ELIZABETH ZUSY C-83441 CIVIL STATE OF CALIFORNIA
5/19/20

BLACK & VEATCH JOINT VENTURE
BLACK & VEATCH
FILANC

CITY OF MORRO BAY
MORRO BAY WATER RECLAMATION FACILITY (WRF)

TREATMENT AREA - BNR BASINS
CIVIL-MECHANICAL
LOWER LEVEL PLAN

DESIGNED: KEZ, EVB
DETAILED: MAK
CHECKED: EVB
APPROVED: EVB
DATE: 5/19/2020

0 1/2 1
IF THIS BAR DOES NOT MEASURE 1" THEN DRAWING IS NOT TO FULL SCALE

PROJECT NO. 400530

31-M-103
SHEET 50 OF 412

PLOTTED: 5/19/2020 2:41:03 PM
D400530

KEY NOTES:

1. VERTICAL SUPPORT. SEE DETAIL E ON 00-S-202
2. DROP LEG PROVIDED TO FLANGE BY DESIGN-BUILDER.
3. DROP LEG AND DIFFUSER GRID PROVIDED BY PLANT DIFFUSER SYSTEM SUPPLIER.

NOTES:

1. AERATION SYSTEM SUPPLIER SHALL PROVIDE CONNECTION TO AERATION DROP LEG IN THE LOCATION SHOWN.
2. ALL BLOWER AIR PIPING SHALL BE INSULATED IF IT IS 8 FEET OR LESS ABOVE FINISHED FLOOR OR ACCESS WALKWAYS.

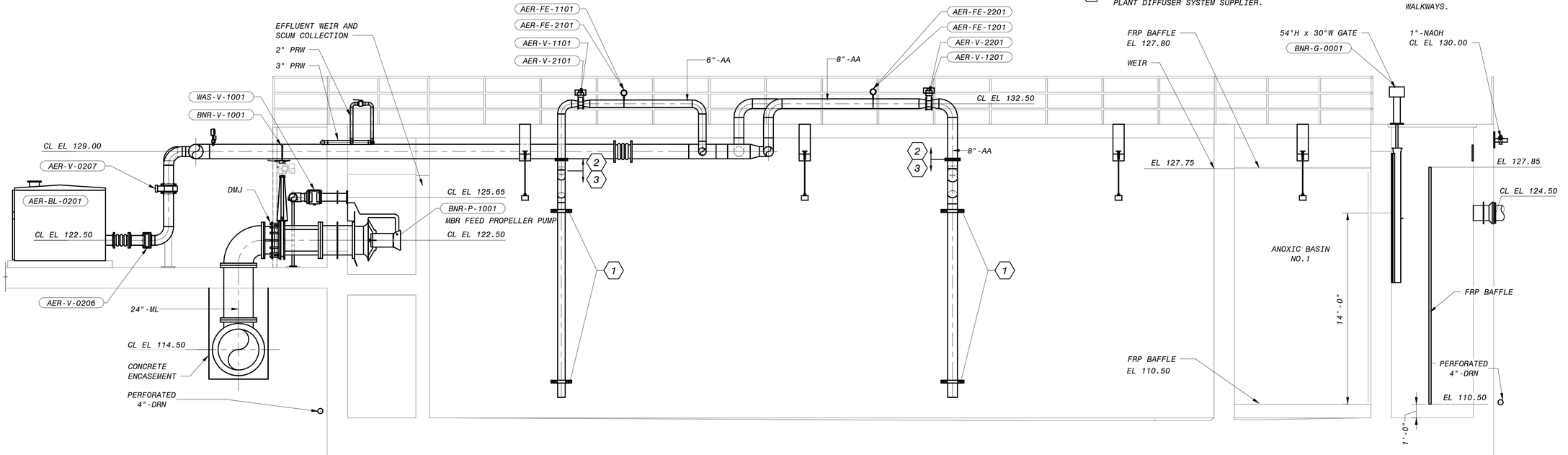

1 SECTION
31-M-101 1/4" = 1'-0"

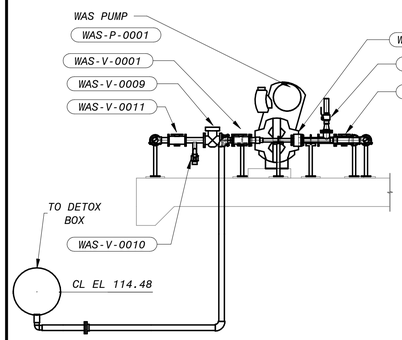

2 SECTION
31-M-103 1/4" = 1'-0"

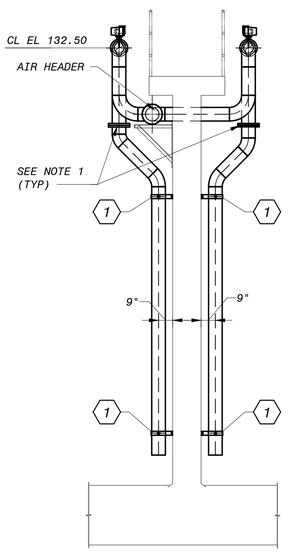

3 SECTION
31-M-101 1/4" = 1'-0"

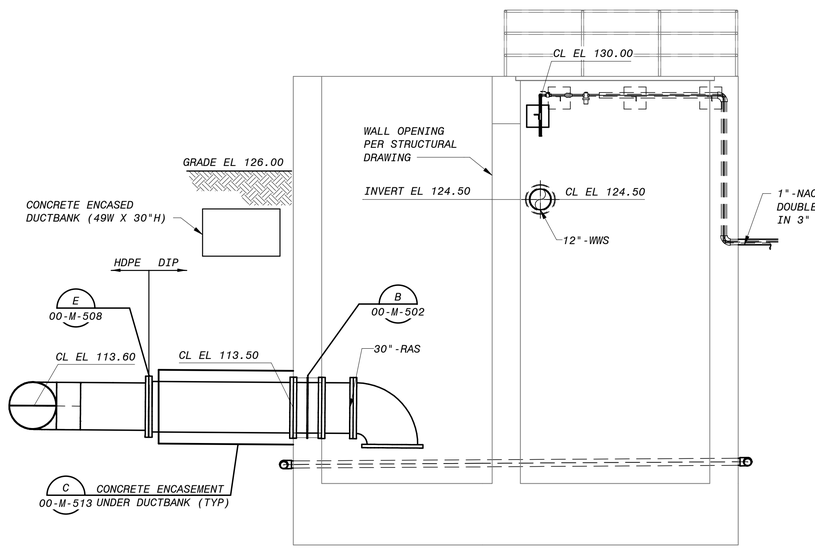

4 SECTION
31-M-101 1/4" = 1'-0"

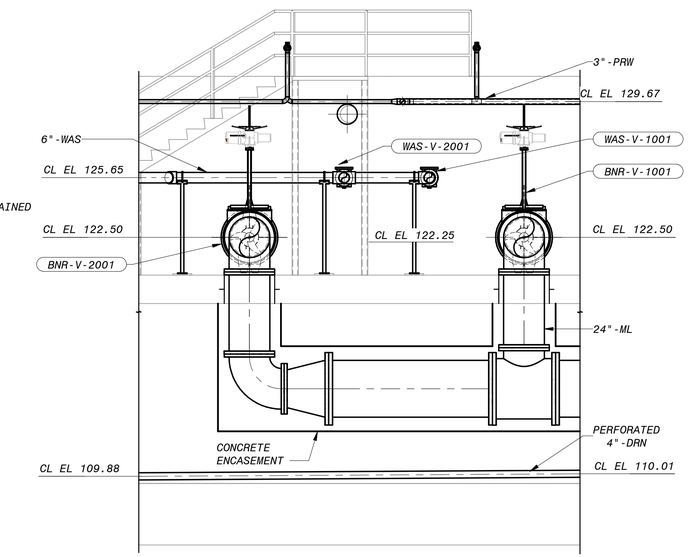

5 SECTION
31-M-102 1/4" = 1'-0"

4' 2' 0' 4' 8'
1/4" = 1'-0"

NO.	BY	CHK	APP
0	KEZ	RWF	EVB

REVISIONS AND RECORD OF USE

ISSUED FOR CONSTRUCTION 5/19/2020

REGISTERED PROFESSIONAL ENGINEER KATHRYN ELIZABETH MUSY C-83441 CIVIL STATE OF CALIFORNIA 5/19/20

BLACK & VEATCH

JOINT VENTURE

BLACK & VEATCH

FILANC

CITY OF MORRO BAY
MORRO BAY WATER RECLAMATION FACILITY (WRF)

TREATMENT AREA - BNR BASINS
CIVIL-MECHANICAL
SECTION AND DETAILS 1

DESIGNED:	KEZ, EVB
DETAILED:	MAK
CHECKED:	EVB
APPROVED:	EVB
DATE:	5/19/2020

0 1/2 1

IF THIS BAR DOES NOT MEASURE 1" THEN DRAWING IS NOT TO FULL SCALE

PROJECT NO. 400530

31-M-301

SHEET 51 OF 412

PLOTTED: 5/19/2020 2:41:09 PM

D400530

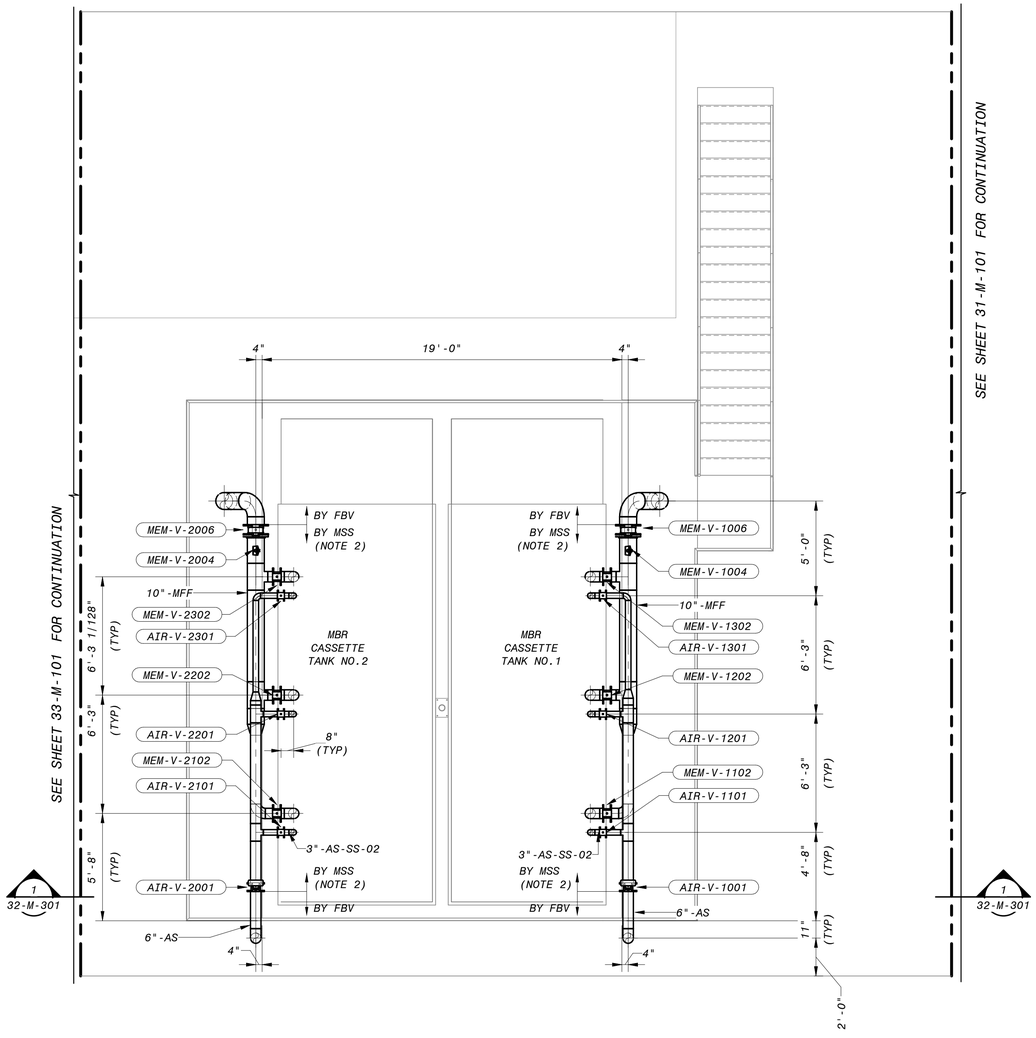

1 MBR SYSTEM - UPPER LEVEL PLAN
31-M-301 1/4" = 1'-0"

NOTES:

1. INFLUENT MANIFOLD AND PIPING PROVIDED BY MBR SYSTEM SUPPLIER.
2. FILTRATE PIPING AND AERATION HEADERS AND BRANCHES PROVIDED BY MBR SYSTEM SUPPLIER.
3. ALL BLOWER AIR PIPING SHALL BE INSULATED IF IT IS WITH 8 FEET OF FINISHED FLOOR OR ACCESS WALKWAYS.

4' 2' 0' 4' 8'
1/4" = 1'-0"

NO.	BY	CHK	APP	DATE	REVISIONS AND RECORD OF USE
0	KEZ	RWF	EVB	5/19/2020	ISSUED FOR CONSTRUCTION

REGISTERED PROFESSIONAL ENGINEER
KATHRYN ELIZABETH MUSY
C-83441
CIVIL
STATE OF CALIFORNIA
5/19/20

BLACK & VEATCH
JOINT VENTURE
BLACK & VEATCH
FILANC

CITY OF MORRO BAY
MORRO BAY WATER
RECLAMATION FACILITY (WRF)

TREATMENT AREA - MBR SYSTEM
CIVIL-MECHANICAL
UPPER LEVEL PLAN

DESIGNED: KEZ, EVB
DETAILED: MAK
CHECKED: EVB
APPROVED: EVB
DATE: 5/19/2020

0 1/2 1
IF THIS BAR DOES NOT MEASURE 1" THEN DRAWING IS NOT TO FULL SCALE

PROJECT NO.
400530

32-M-101
SHEET
52 OF 412

PLOTTED: 5/19/2020 2:41:09 PM
D400530

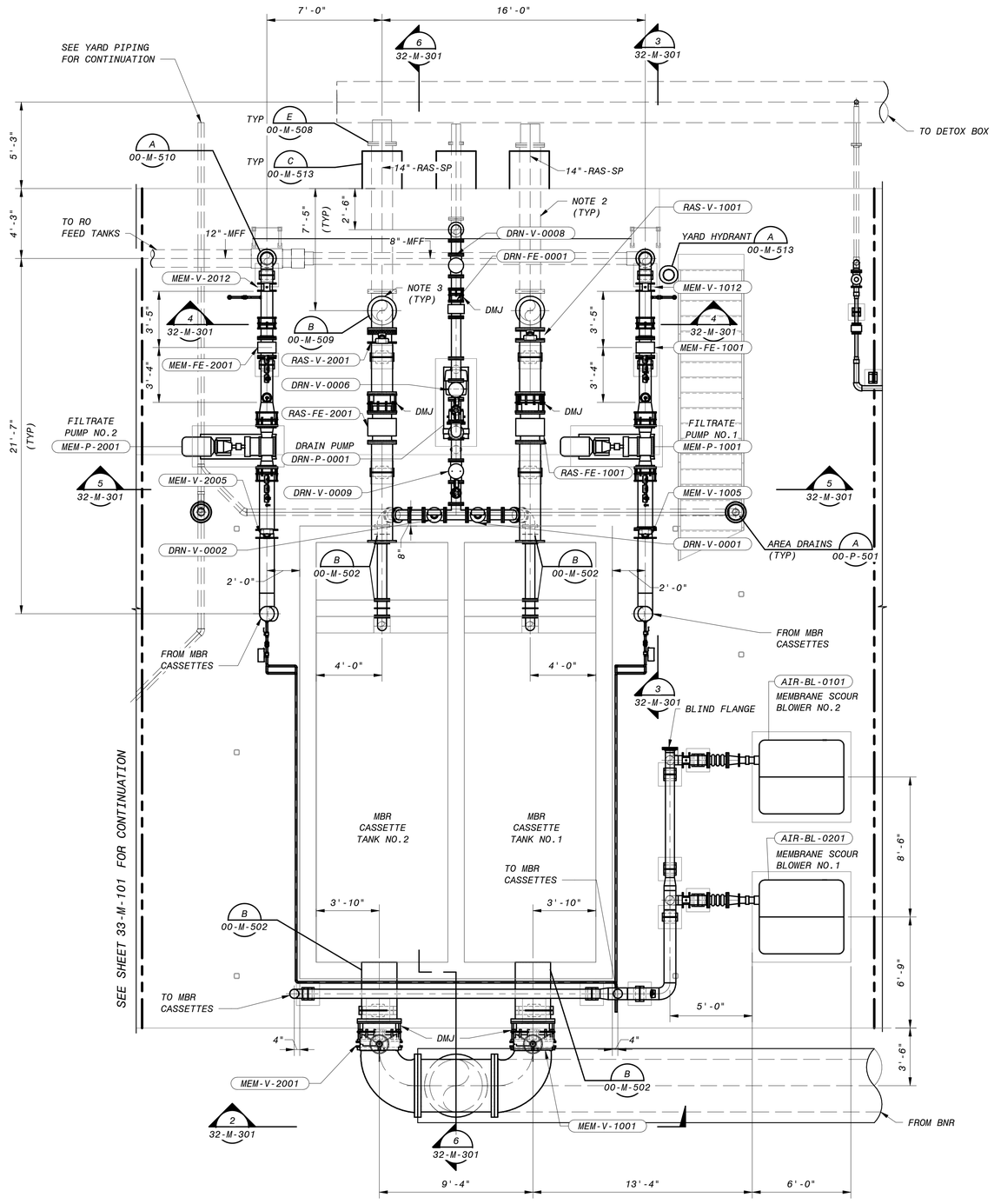

A MBR SYSTEM - LOWER LEVEL PLAN
30-M-101 1/4" = 1'-0"

NOTES:

1. VALVES, INSTRUMENTS AND FLOW METERS PROVIDED BY MBR SYSTEM SUPPLIER AS INDICATED ON P&ID DRAWINGS.
2. CONCRETE ENCASE UNDER SLAB PIPING.
3. PROVIDE INSLUATING KIT AT FIRST FLANGE ABOVE GRADE ON METALLIC PIPING.
4. PIPING AND AERATION CONNECTIONS PROVIDED BY MBR SYSTEM SUPPLIER.
5. FOR ALL OUTDOOR AREA DRAINS, IT IS ASSUMED THESE WILL BE COVERED WITH MATS DURING RAIN STORMS. THE PLANT SEWER SYSTEM IS NOT DESIGNED TO HANDLE RAIN FLOW.
6. ALL BLOWER AIR PIPING SHALL BE INSULATED IF IT IS 8 FEET OR LESS ABOVE FINISHED FLOOR OR ACCESS WALKWAYS.

4' 2' 0' 4' 8'
1/4" = 1'-0"

NO.	BY	CHK	APP
0	KEZ	RWF	EVB

REVISIONS AND RECORD OF USE

DATE	
5/19/2020	ISSUED FOR CONSTRUCTION

REGISTERED PROFESSIONAL ENGINEER
KATHRYN ELIZABETH ZUSY
C-83441
CIVIL
STATE OF CALIFORNIA
5/19/20

BLACK & VEATCH
JOINT VENTURE
BLACK & VEATCH
FILANC

CITY OF MORRO BAY
MORRO BAY WATER
RECLAMATION FACILITY (WRF)

TREATMENT AREA - MBR SYSTEM
CIVIL-MECHANICAL
LOWER LEVEL PLAN

DESIGNED: KEZ, EVB
DETAILED: MAK
CHECKED: EVB
APPROVED: EVB
DATE: 5/19/2020

0 1/2 1
IF THIS BAR DOES NOT MEASURE 1" THEN DRAWING IS NOT TO FULL SCALE

PROJECT NO.
400530

32-M-102
SHEET
53 OF 412

PLOTTED: 5/19/2020 2:41:13 PM
D400530

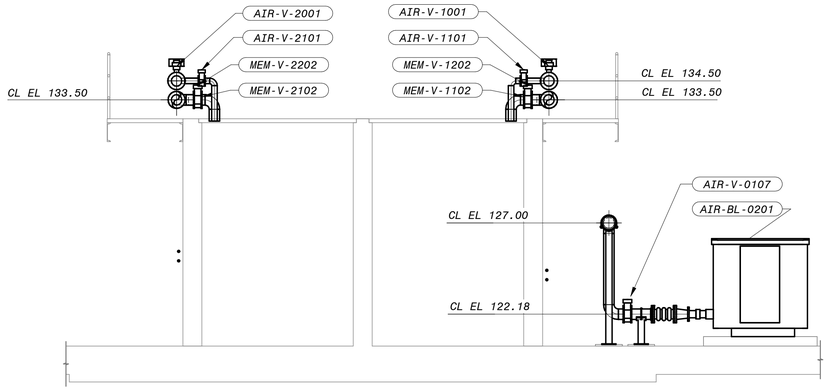

1 SECTION
32-M-101 1/4" = 1'-0"

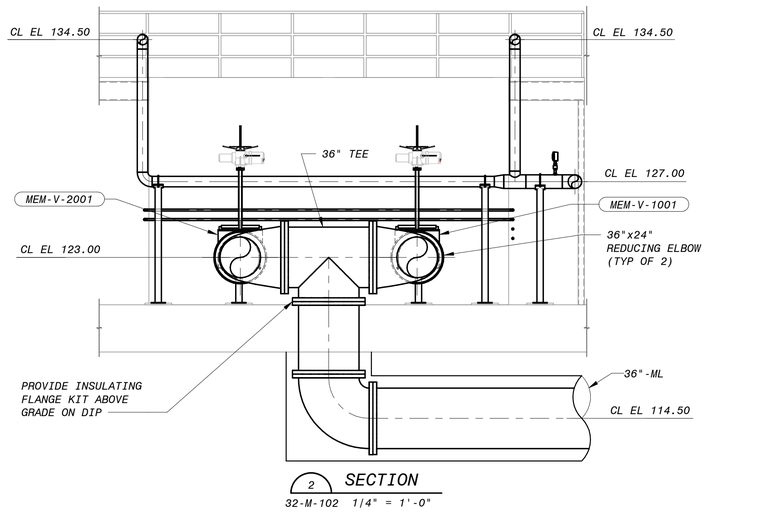

2 SECTION
32-M-102 1/4" = 1'-0"

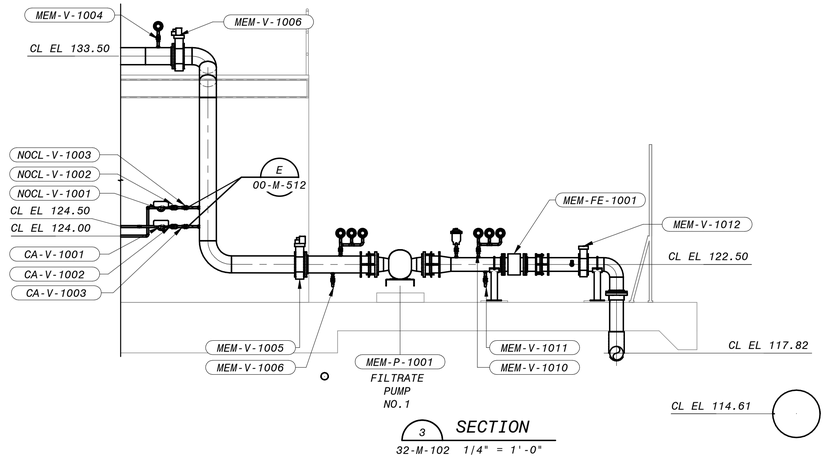

3 SECTION
32-M-102 1/4" = 1'-0"

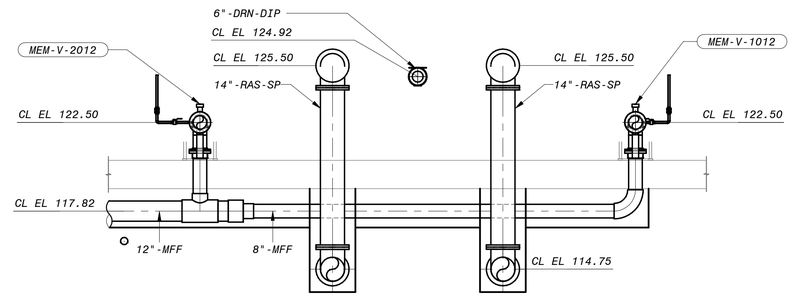

4 SECTION
32-M-102 1/4" = 1'-0"

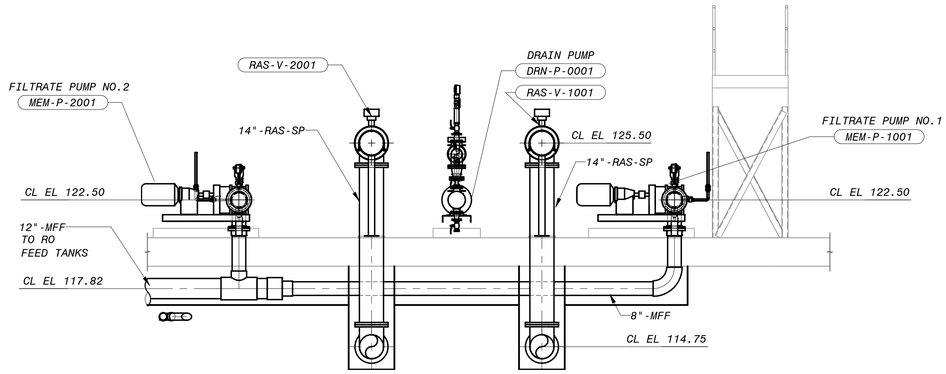

5 SECTION
32-M-102 1/4" = 1'-0"

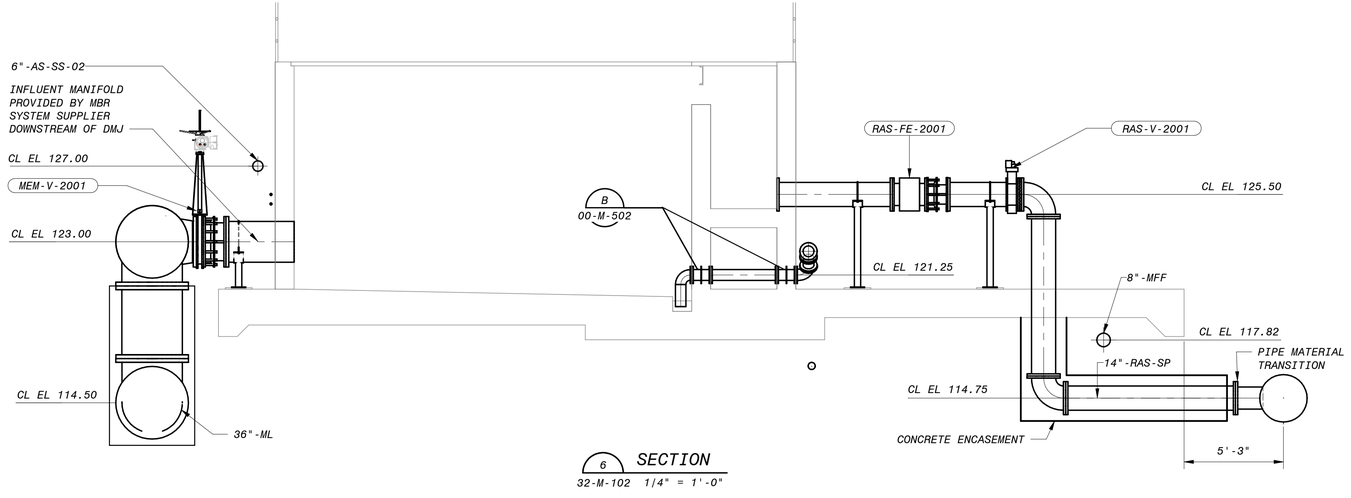

6 SECTION
32-M-102 1/4" = 1'-0"

4' 2' 0' 4' 8'
1/4" = 1'-0"

NOTES:

1. ALL BLOWER AIR PIPING SHALL BE INSULATED IF IT IS 8 FEET OR LESS ABOVE FINISHED FLOOR OR ACCESS WALKWAYS.

NO.	BY	CHK	APP
0	KEZ	RWF	EVB

REVISIONS AND RECORD OF USE

ISSUED FOR CONSTRUCTION — 5/19/2020 — DATE

REGISTERED PROFESSIONAL ENGINEER
KATHRYN ELIZABETH MUSY
C-83441
CIVIL
STATE OF CALIFORNIA
5/19/20

BLACK & VEATCH
JOINT VENTURE
BLACK & VEATCH
FILANC

CITY OF MORRO BAY
MORRO BAY WATER
RECLAMATION FACILITY (WRF)

TREATMENT AREA - MBR SYSTEM
CIVIL-MECHANICAL
SECTION

DESIGNED: KEZ, EVB
DETAILED: MAK
CHECKED: EVB
APPROVED: EVB
DATE: 5/19/2020

0 1/2 1
IF THIS BAR DOES NOT MEASURE 1" THEN DRAWING IS NOT TO FULL SCALE

PROJECT NO.
400530

32-M-301
SHEET
54 OF 412

PLOTTED: 5/19/2020 2:41:18 PM
D400530

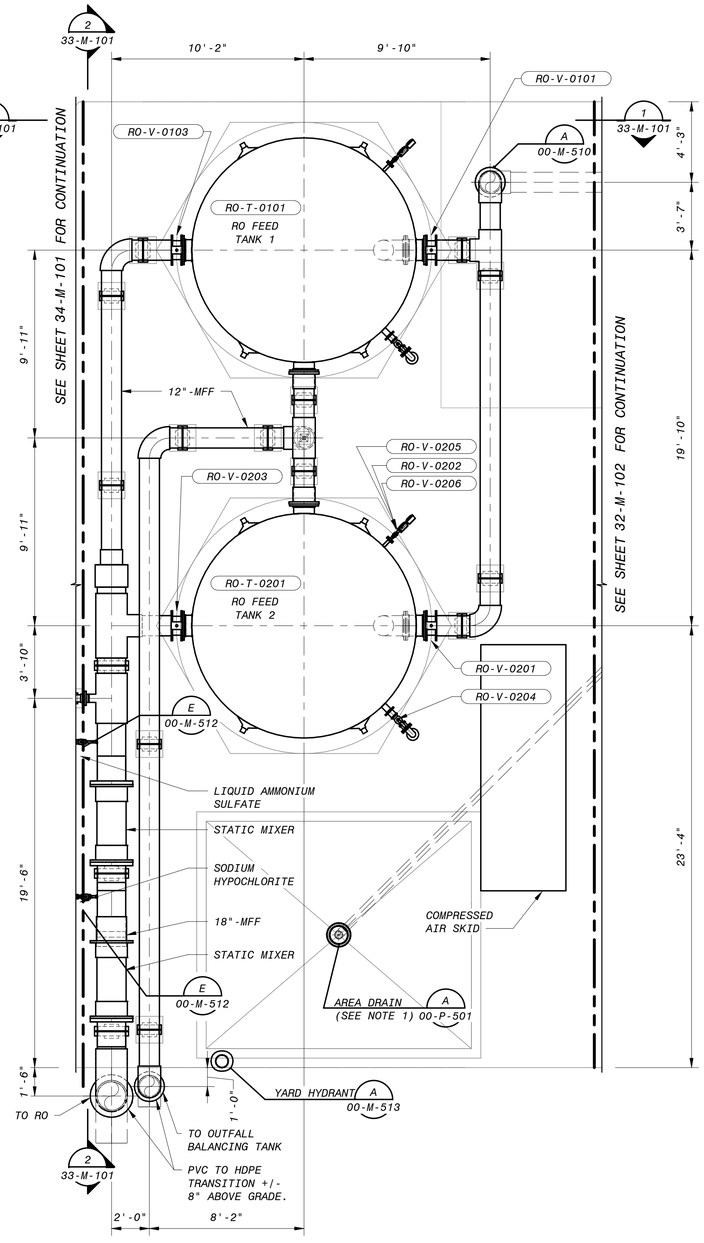

A RO FEED TANKS - OPERATING LEVEL PLAN
30-M-101 1/4" = 1'-0"

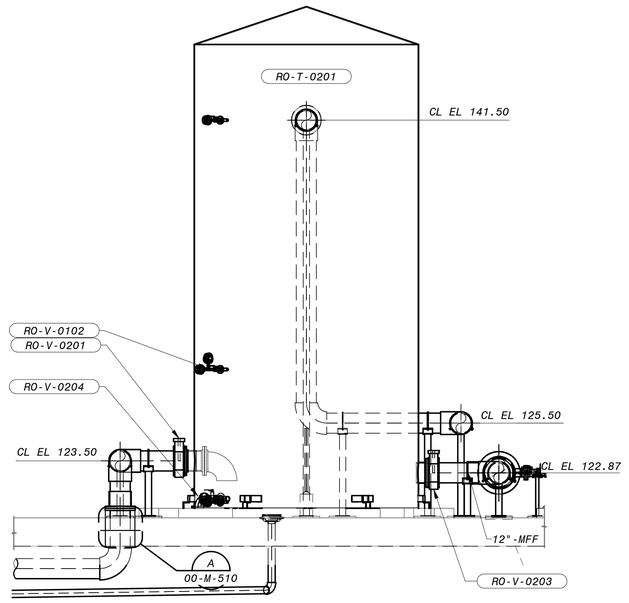

1 SECTION
33-M-101 1/4" = 1'-0"

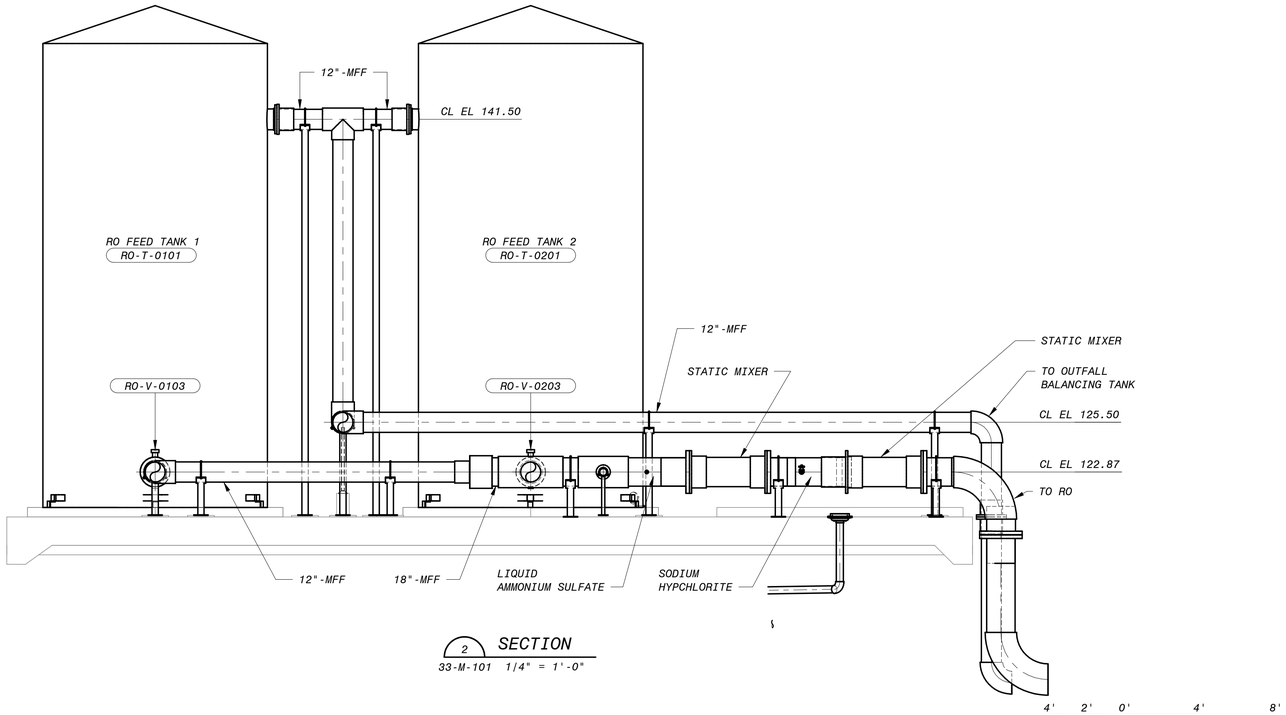

2 SECTION
33-M-101 1/4" = 1'-0"

NOTES:

1. FOR ALL OUTDOOR AREA DRAINS, IT IS ASSUMED THESE WILL BE COVERED WITH MATS DURING RAIN STORMS. THE PLANT SEWER SYSTEM IS NOT DESIGNED TO HANDLE RAIN FLOW.

NO.	BY	CHK	APP
0	KEZ	RWF	EVB

DATE	REVISIONS AND RECORD OF USE
5/19/2020	ISSUED FOR CONSTRUCTION

REGISTERED PROFESSIONAL ENGINEER
KATHRYN ELIZABETH ZUBY
C-83441
CIVIL
STATE OF CALIFORNIA
5/19/20

BLACK & VEATCH
JOINT VENTURE
BLACK & VEATCH
FILANC

CITY OF MORRO BAY
MORRO BAY WATER
RECLAMATION FACILITY (WRF)

TREATMENT AREA - RO FEED TANKS
CIVIL-MECHANICAL
OPERATING LEVEL PLAN AND SECTIONS

DESIGNED:	KEZ, EVB
DETAILED:	MAK
CHECKED:	EVB
APPROVED:	EVB
DATE:	5/19/2020

0 1/2 1
IF THIS BAR DOES NOT MEASURE 1" THEN DRAWING IS NOT TO FULL SCALE

PROJECT NO.
400530

33-M-101
SHEET
55 OF 412

4' 2' 0' 4' 8'
1/4" = 1'-0"

PLOTTED: 5/19/2020 2:41:21 PM
D400530

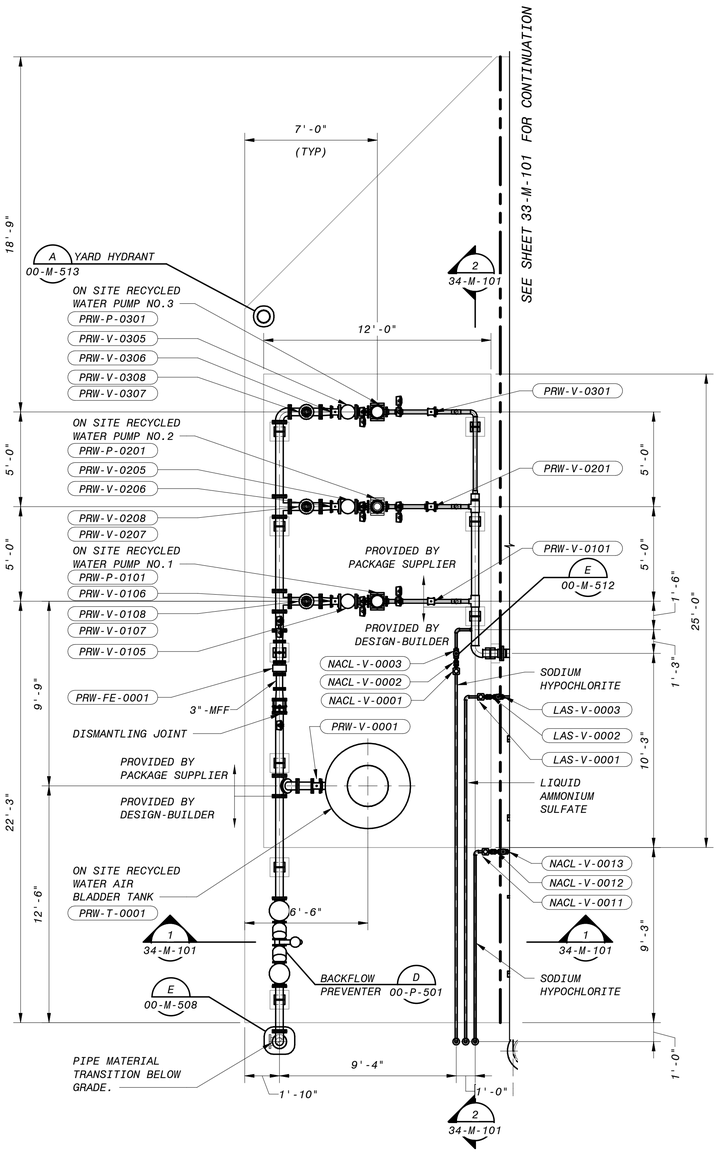

A RECYCLED WATER PUMP STATION - OPERATING LEVEL PLAN

30-M-101 1/4" = 1'-0"

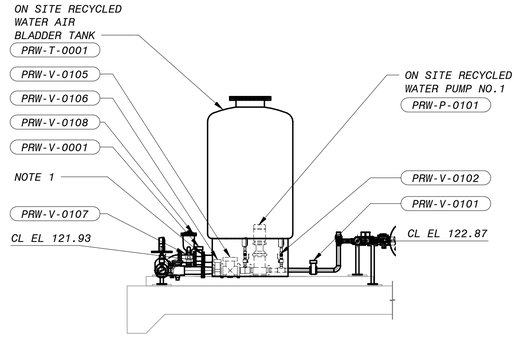

1 SECTION

34-M-101 1/4" = 1'-0"

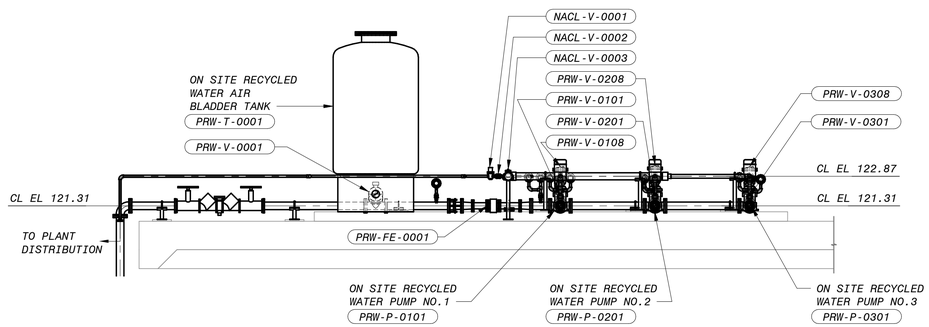

2 SECTION

34-M-101 1/4" = 1'-0"

NOTES:

1. RECYCLED WATER PUMPS AND AIR BLADDER TANK WILL BE PROVIDED BY A SINGLE SUPPLIER. EQUIPMENT ELEVATIONS AND DIMENSIONS WILL BE DEPENDENT ON THE SELECTED SUPPLIER'S PACKAGE. THE DIMENSIONS SHOW THE AVAILABLE SPACE FOR THE PACKAGED PUMP STATION.

NO.	BY	CHK	APP	DATE	REVISIONS AND RECORD OF USE
0	KEZ	RWF	EVB	5/19/2020	ISSUED FOR CONSTRUCTION

REGISTERED PROFESSIONAL ENGINEER KATHRYN ELIZABETH ZUSY C-83441 CIVIL STATE OF CALIFORNIA

5/19/20

BLACK & VEATCH

JOINT VENTURE

FILANC

BLACK & VEATCH

CITY OF MORRO BAY
MORRO BAY WATER
RECLAMATION FACILITY (WRF)

TREATMENT AREA - RECYCLED WATER PUMP STATION
CIVIL-MECHANICAL
OPERATING LEVEL PLAN AND SECTIONS

DESIGNED: KEZ, EVB
DETAILED: MAK
CHECKED: EVB
APPROVED: EVB
DATE: 5/19/2020

0 1/2 1

IF THIS BAR DOES NOT MEASURE 1" THEN DRAWING IS NOT TO FULL SCALE

PROJECT NO. 400530

34-M-101

SHEET 56 OF 412

4' 2' 0' 4' 8'

1/4" = 1'-0"

PLOTTED: 5/19/2020 2:41:25 PM

D400530

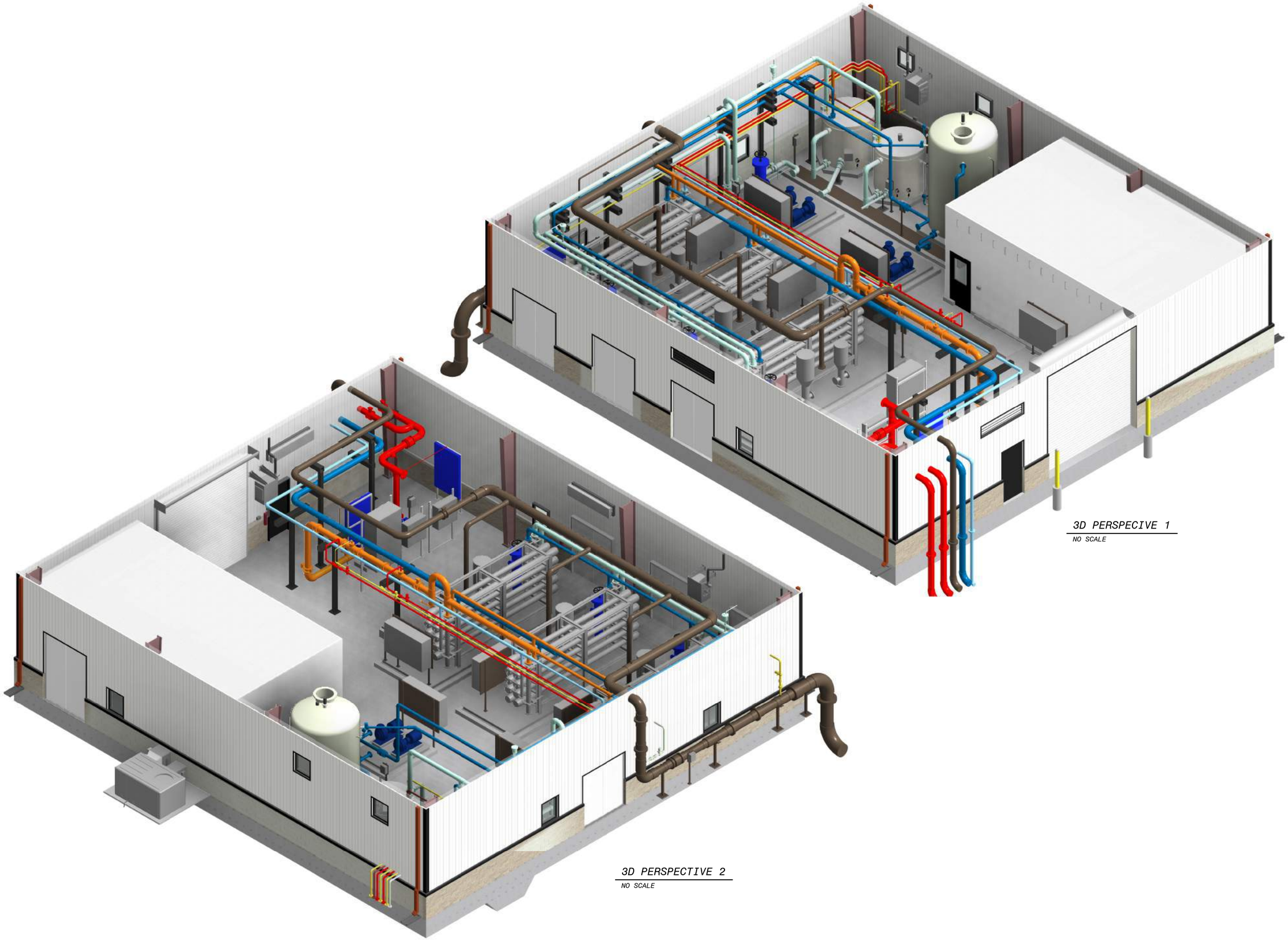

3D PERSPECTIVE 1
NO SCALE

3D PERSPECTIVE 2
NO SCALE

NO.	BY	CHK	APP
0	KEZ	RWF	EVB

DATE	REVISIONS AND RECORD OF USE
5/19/2020	ISSUED FOR CONSTRUCTION

REGISTERED PROFESSIONAL ENGINEER
ERICK V. BEVINGTON
No. C 78836
CIVIL
STATE OF CALIFORNIA
5/20/2020

BLACK & VEATCH
JOINT VENTURE
BLACK & VEATCH
FILANC

CITY OF MORRO BAY
MORRO BAY WATER
RECLAMATION FACILITY (WRF)

RO/UV BUILDING - OVERALL
CIVIL-MECHANICAL
3D VIEWS

DESIGNED: KEZ, EVB
DETAILED: MAK
CHECKED: EVB
APPROVED: EVB
DATE: 5/19/2020

0 1/2 1
IF THIS BAR DOES NOT MEASURE 1" THEN DRAWING IS NOT TO FULL SCALE

PROJECT NO.
400530

50-M-001
SHEET
57 OF 412

PLOTTED: 5/19/2020 8:13:44 AM
D400530

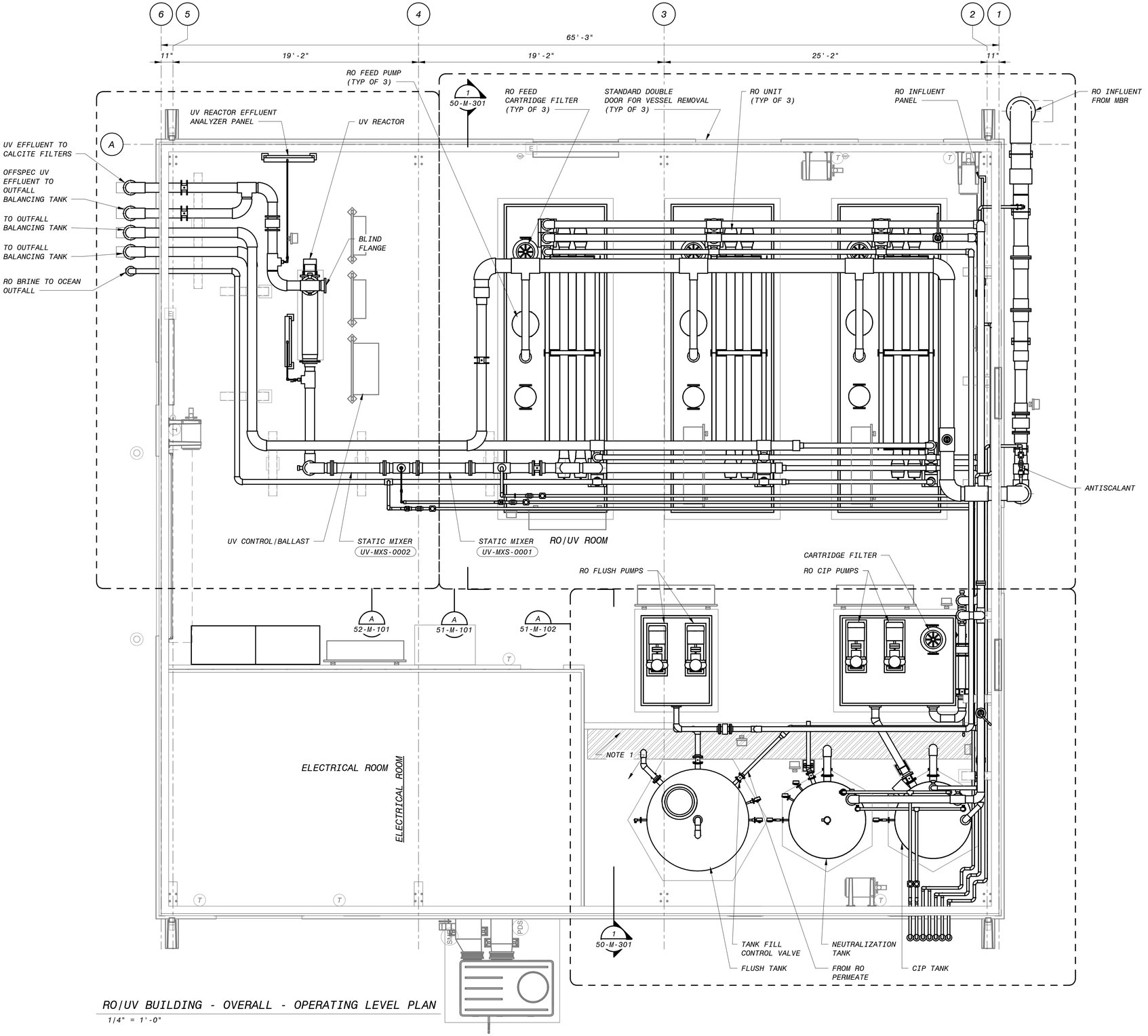

RO/UV BUILDING - OVERALL - OPERATING LEVEL PLAN

1/4" = 1'-0"

NOTES:

1. TANK CONTAINMENT AREA TO BE COATED PER THE REQUIREMENTS OF SPECIFICATION 099724.

4' 2' 0' 4' 8'

1/4" = 1'-0"

NO.	BY	CHK	APP
0	KEZ	RWF	EVB

REVISIONS AND RECORD OF USE

ISSUED FOR CONSTRUCTION 5/19/2020

DATE

REGISTERED PROFESSIONAL ENGINEER
PATRICK V. BEVINGTON
No. C 78836
CIVIL
STATE OF CALIFORNIA
5/20/2020

BLACK & VEATCH
JOINT VENTURE
BLACK & VEATCH
FILANC

CITY OF MORRO BAY
MORRO BAY WATER RECLAMATION FACILITY (WRF)

RO/UV BUILDING - OVERALL - CIVIL-MECHANICAL OPERATING LEVEL PLAN

DESIGNED: KEZ, EVB
DETAILED: MAK
CHECKED: EVB
APPROVED: EVB
DATE: 5/19/2020

0 1/2 1

IF THIS BAR DOES NOT MEASURE 1" THEN DRAWING IS NOT TO FULL SCALE

PROJECT NO.
400530

50-M-101
SHEET
58 OF 412

PLOTTED: 5/19/2020 8:13:52 AM
D400530

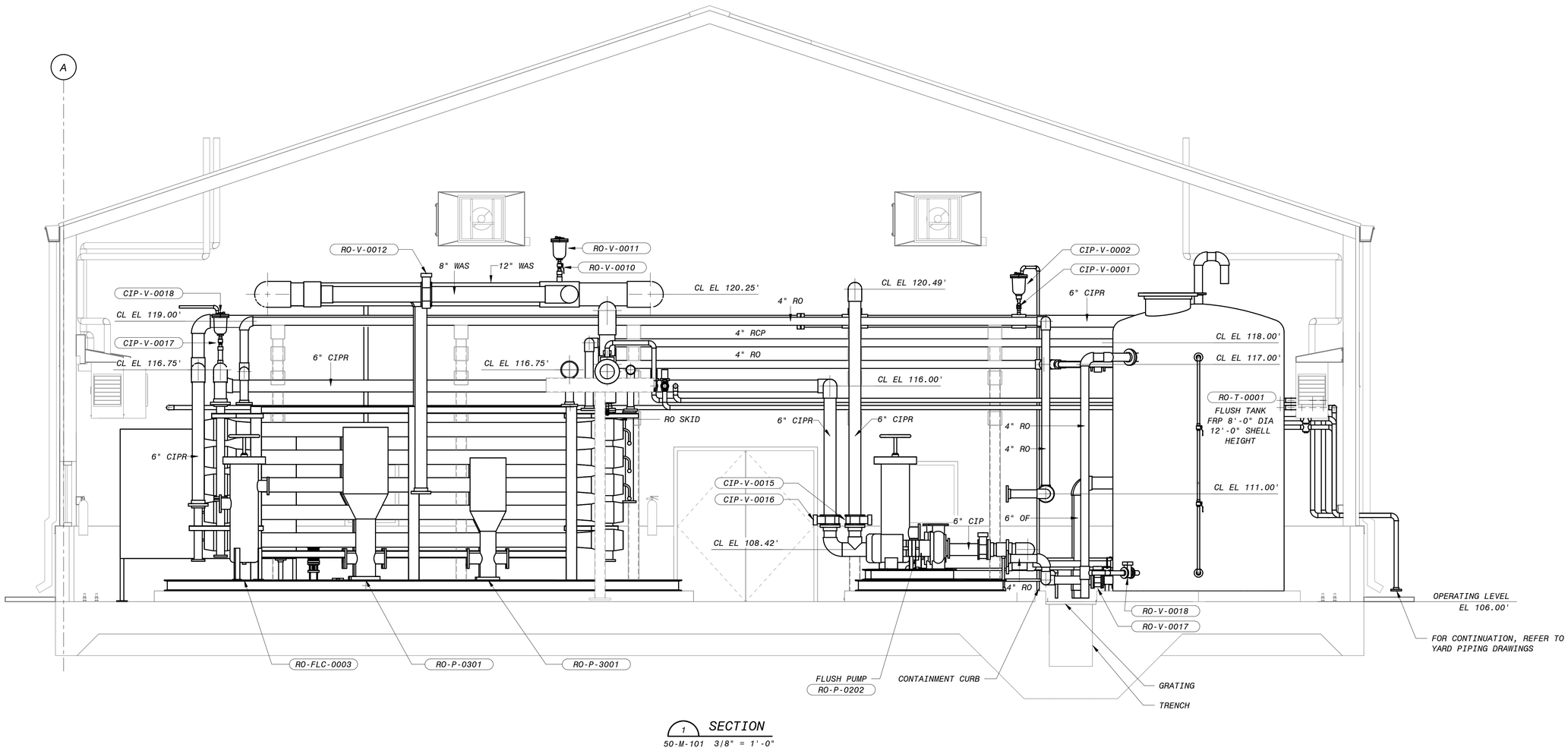

1 SECTION
50-M-101 3/8" = 1'-0"

12" 0' 1' 2' 3' 4' 5' 6' 7'
3/8" = 1'-0"

NO.	BY	CHK	APP
0	KEZ	RWF	EVB

DATE	REVISIONS AND RECORD OF USE
5/19/2020	ISSUED FOR CONSTRUCTION

REGISTERED PROFESSIONAL ENGINEER
ERICK V. BEVINGTON
No. C 78836
CIVIL
STATE OF CALIFORNIA
5/20/2020

BLACK & VEATCH
JOINT VENTURE
BLACK & VEATCH
FILANC

CITY OF MORRO BAY
MORRO BAY WATER
RECLAMATION FACILITY (WRF)

RO/UV BUILDING - OVERALL
CIVIL-MECHANICAL
SECTION

DESIGNED: KEZ, EVB
DETAILED: MAK
CHECKED: EVB
APPROVED: EVB
DATE: 5/19/2020

0 1/2 1
IF THIS BAR DOES NOT MEASURE 1" THEN DRAWING IS NOT TO FULL SCALE

PROJECT NO.
400530

50-M-301
SHEET
59 OF 412

PLOTTED: 5/19/2020 8:13:55 AM
D400530

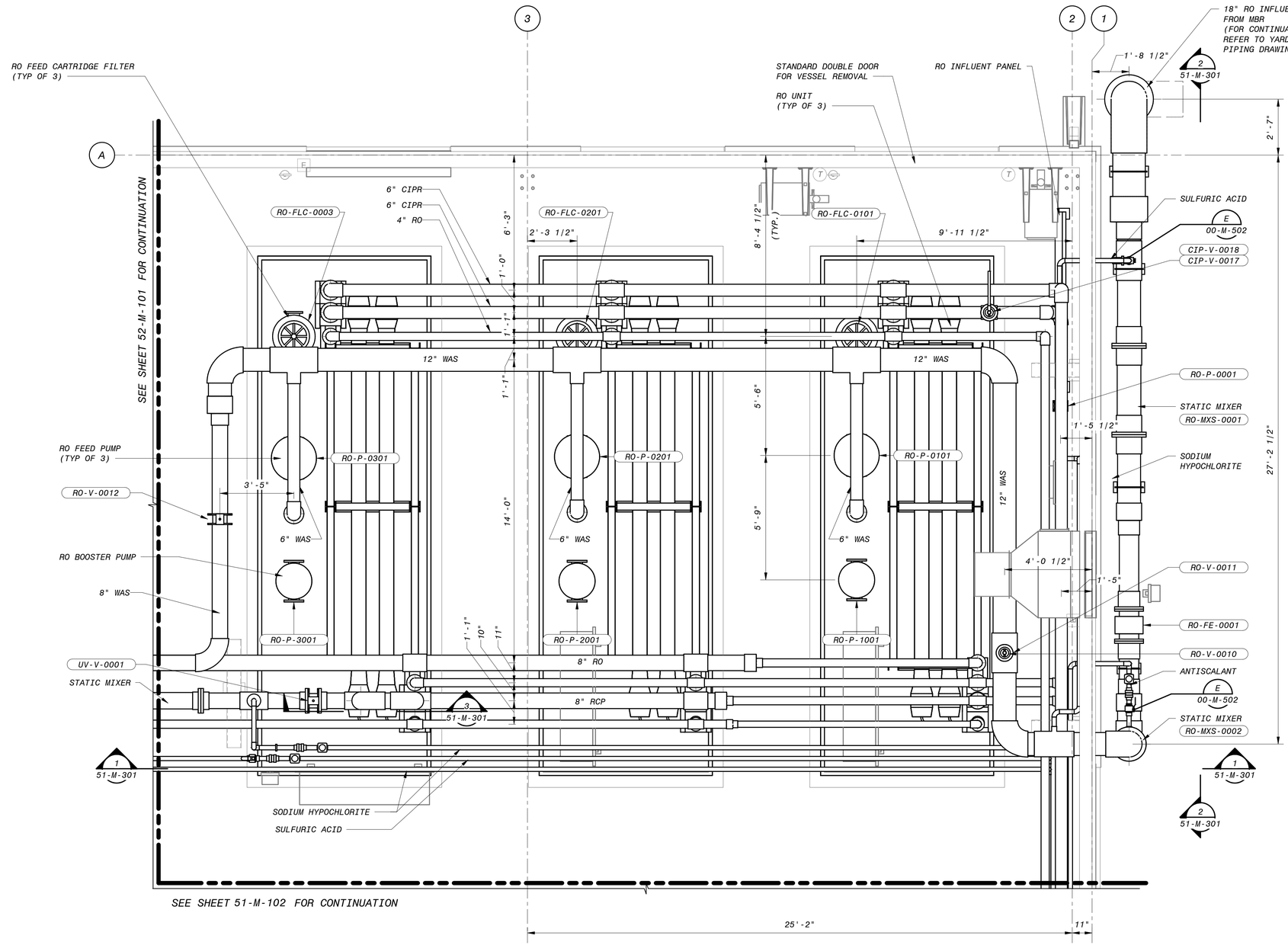

A RO SYSTEM - MEMBRANE RACKS PLAN
50-M-101 3/8" = 1'-0"

NOTES:
1. RO CONFIGURATION AND CONNECTION LOCATIONS TO BE FINALIZED WHEN EQUIPMENT SELECTED.

NO.	BY	CHK	APP
0	KEZ	RWF	EVB

DATE	REVISIONS AND RECORD OF USE
5/19/2020	ISSUED FOR CONSTRUCTION

REGISTERED PROFESSIONAL ENGINEER
ERICK V. BEVINGTON
No. C 78836
CIVIL
STATE OF CALIFORNIA
5/20/2020

BLACK & VEATCH
JOINT VENTURE
BLACK & VEATCH
FILANC

CITY OF MORRO BAY
MORRO BAY WATER RECLAMATION FACILITY (WRF)

RO/UV BUILDING - RO SYSTEM
CIVIL-MECHANICAL
MEMBRANE RACKS PLAN

DESIGNED: KEZ, EVB
DETAILED: RMB
CHECKED: EVB
APPROVED: EVB
DATE: 5/19/2020

0 1/2 1
IF THIS BAR DOES NOT MEASURE 1" THEN DRAWING IS NOT TO FULL SCALE

PROJECT NO.
400530

51-M-101
SHEET
60 OF 412

12" 0' 1' 2' 3' 4' 5' 6' 7'
3/8" = 1'-0"

PLOTTED: 5/19/2020 8:13:59 AM
D400530

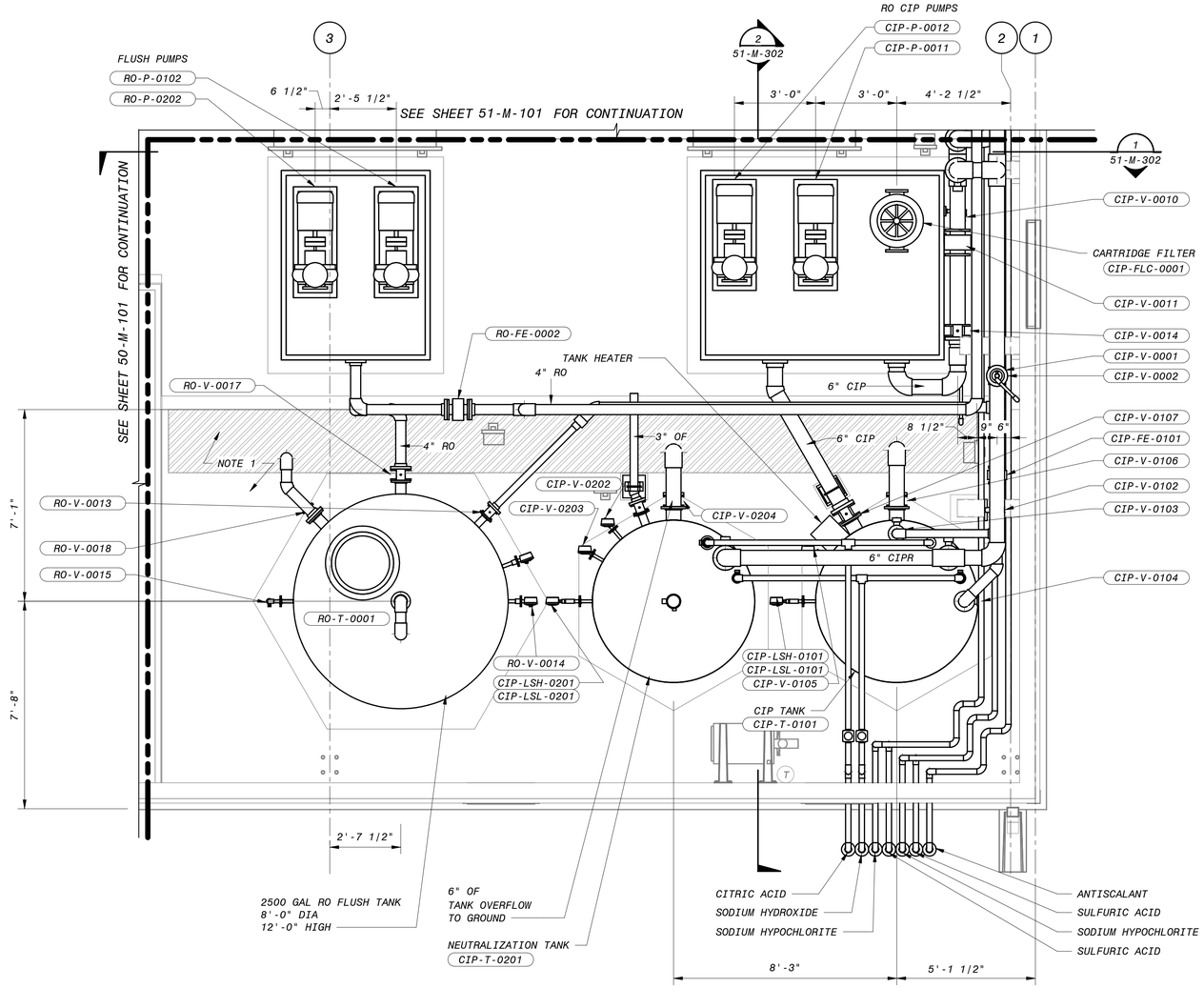

A RO SYSTEM - CIP & FLUSH SYSTEMS PLAN

50-M-101 3/8" = 1'-0"

NOTES:

1. CIP TANK AREA AND CONTAINMENT TRENCH TO BE COATED PER REQUIREMENTS OF CORROSION PROTECTION SYSTEMS SPECIFICATIONS.

NO.	BY	CHK	APP	DATE	REVISIONS AND RECORD OF USE
0	KEZ	RWF	EVB	5/19/2020	ISSUED FOR CONSTRUCTION

REGISTERED PROFESSIONAL ENGINEER
ERICK V. BEVINGTON
No. C 78836
CIVIL
STATE OF CALIFORNIA
5/20/2020

BLACK & VEATCH
JOINT VENTURE
BLACK & VEATCH
FILANC

CITY OF MORRO BAY
MORRO BAY WATER
RECLAMATION FACILITY (WRF)

RO/UV BUILDING - RO SYSTEM
CIVIL-MECHANICAL
CIP & FLUSH SYSTEMS PLAN

DESIGNED:	KEZ, EVB
DETAILED:	MAK
CHECKED:	EVB
APPROVED:	EVB
DATE:	5/19/2020

0 1/2 1
IF THIS BAR DOES NOT MEASURE 1" THEN DRAWING IS NOT TO FULL SCALE

12" 0' 1' 2' 3' 4' 5' 6' 7'
3/8" = 1'-0"

PROJECT NO.
400530

51-M-102
SHEET
61 OF 412

PLOTTED: 5/19/2020 8:14:03 AM
D400530

NOTES:

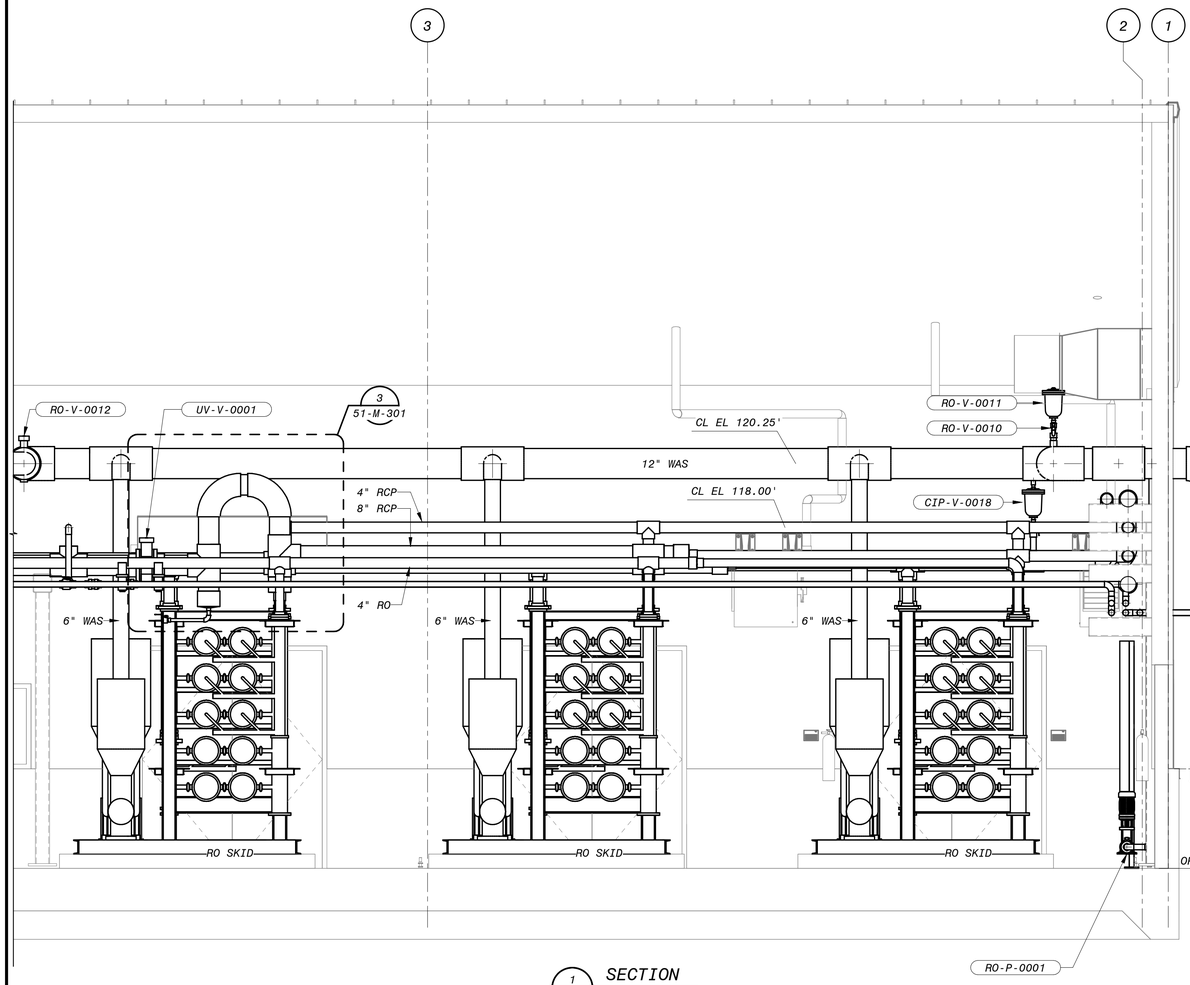

1 SECTION
51-M-101 3/8" = 1'-0"

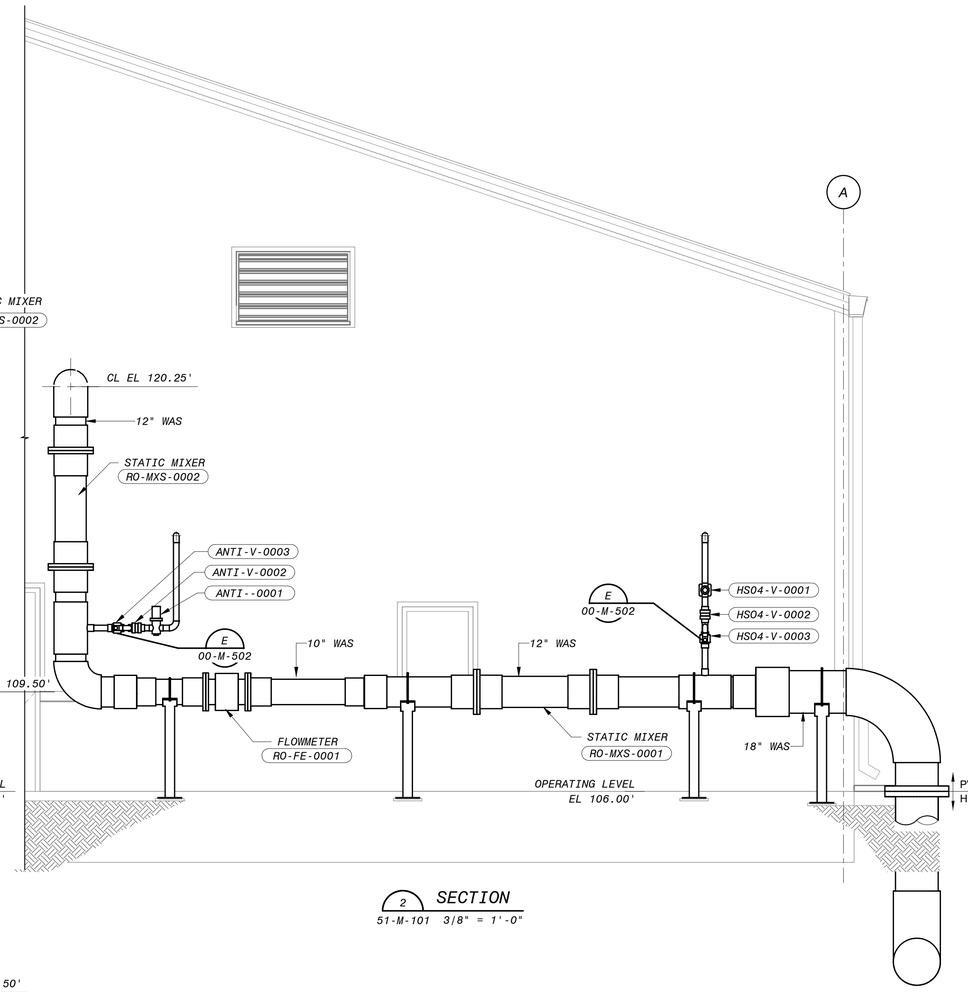

2 SECTION
51-M-101 3/8" = 1'-0"

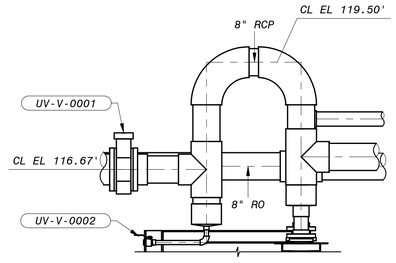

BACKFLOW PREVENTION LOOP

3 SECTION
51-M-101 1/2" = 1'-0"

NO.	BY	CHK	APP
0	KEZ	RWF	EVB

REVISIONS AND RECORD OF USE

DATE	ISSUED FOR CONSTRUCTION
5/19/2020	

REGISTERED PROFESSIONAL ENGINEER
ERICK V. BEVINGTON
No. C 78836
CIVIL
STATE OF CALIFORNIA
5/20/2020

BLACK & VEATCH
JOINT VENTURE
BLACK & VEATCH
FILANC

CITY OF MORRO BAY
MORRO BAY WATER
RECLAMATION FACILITY (WRF)

RO-UV BUILDING - RO SYSTEM
CIVIL-MECHANICAL
SECTIONS AND DETAILS 1

DESIGNED: KEZ, EVB
DETAILED: MAK
CHECKED: EVB
APPROVED: EVB
DATE: 5/19/2020

12' 6' 0' 1' 2' 3' 4' 5'
1/2" = 1'-0"

0 1/2 1
IF THIS BAR DOES NOT MEASURE 1" THEN DRAWING IS NOT TO FULL SCALE

12" 0' 1' 2' 3' 4' 5' 6' 7'
3/8" = 1'-0"

PROJECT NO.
400530

51-M-301
SHEET
62 OF 412

PLOTTED: 5/19/2020 8:14:07 AM
D400530

NOTES:

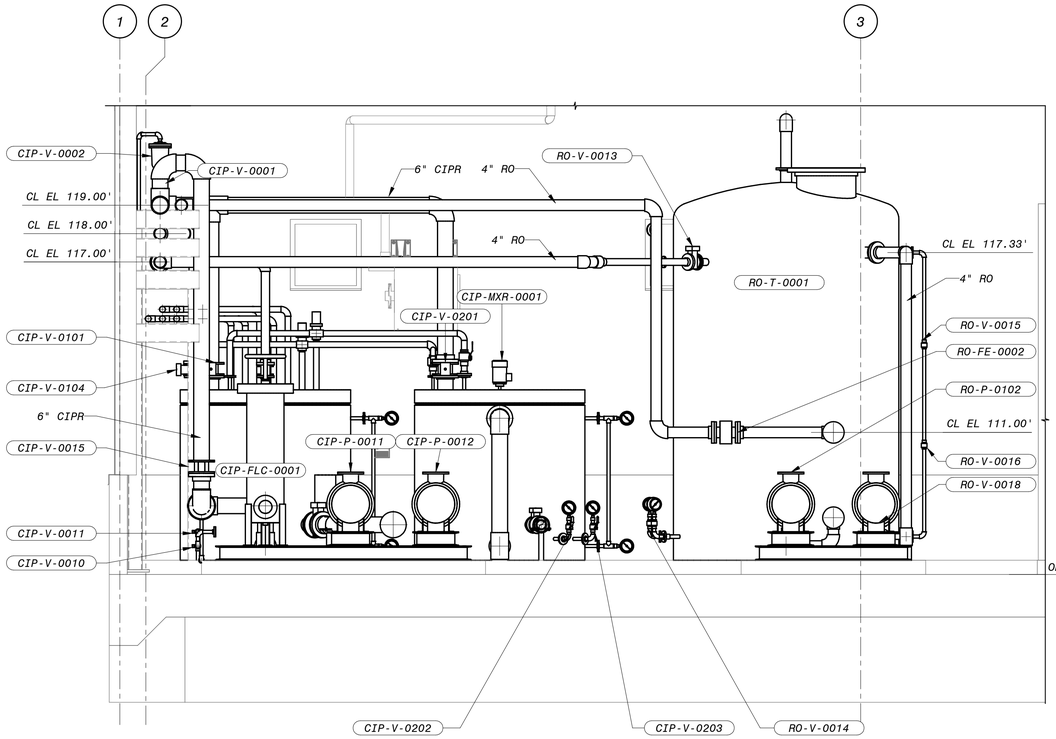

1 SECTION
51-M-102 3/8" = 1'-0"

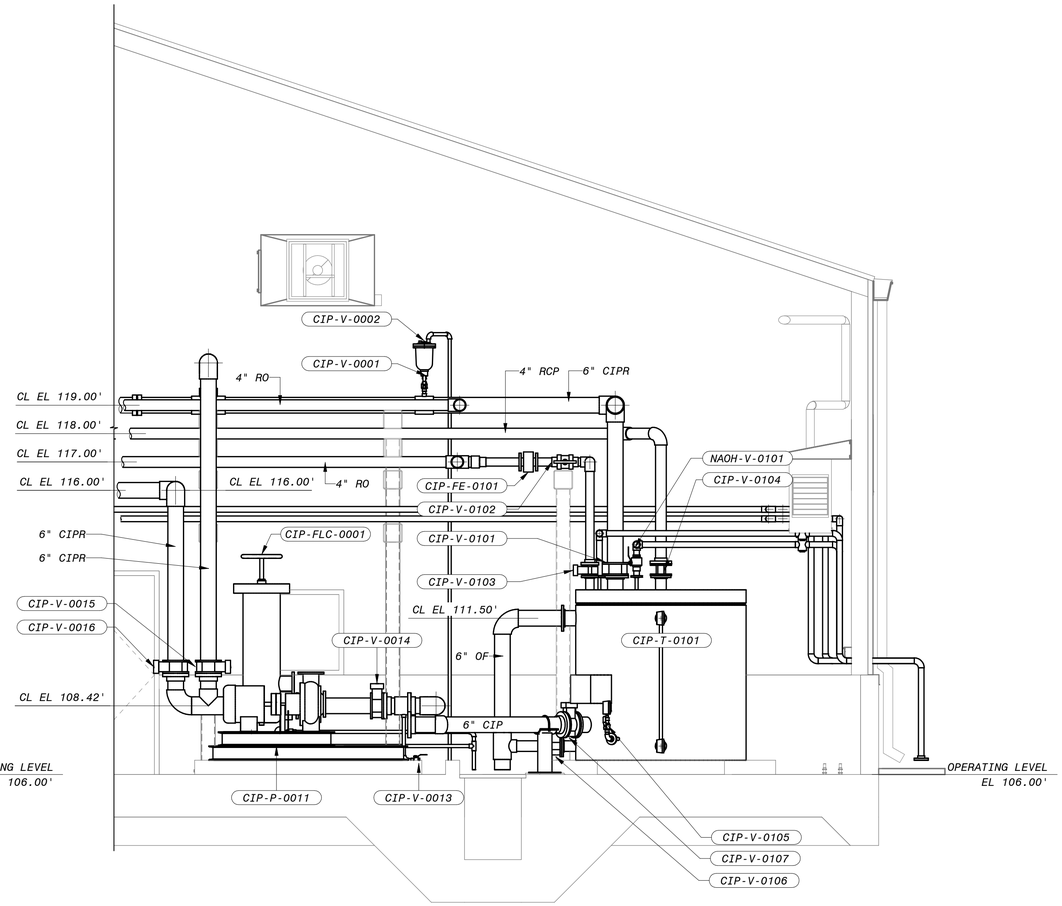

2 SECTION
51-M-102 3/8" = 1'-0"

12" 0' 1' 2' 3' 4' 5' 6' 7'
3/8" = 1'-0"

NO.	BY	CHK	APP'D
0	KEZ	RWF	EVB

DATE	REVISIONS AND RECORD OF USE
5/19/2020	ISSUED FOR CONSTRUCTION

REGISTERED PROFESSIONAL ENGINEER
ERICK V. BEVINGTON
No. C 78836
CIVIL
STATE OF CALIFORNIA
5/20/2020

BLACK & VEATCH
JOINT VENTURE
BLACK & VEATCH
FILANC

CITY OF MORRO BAY
MORRO BAY WATER
RECLAMATION FACILITY (WRF)

RO/UV BUILDING - RO SYSTEM
CIVIL-MECHANICAL
SECTIONS AND DETAILS 2

DESIGNED: KEZ, EVB
DETAILED: MAK
CHECKED: EVB
APPROVED: EVB
DATE: 5/19/2020

0 1/2 1
IF THIS BAR DOES NOT MEASURE 1" THEN DRAWING IS NOT TO FULL SCALE

PROJECT NO.
400530

51-M-302
SHEET
63 OF 412

PLOTTED: 5/19/2020 8:14:11 AM
D400530

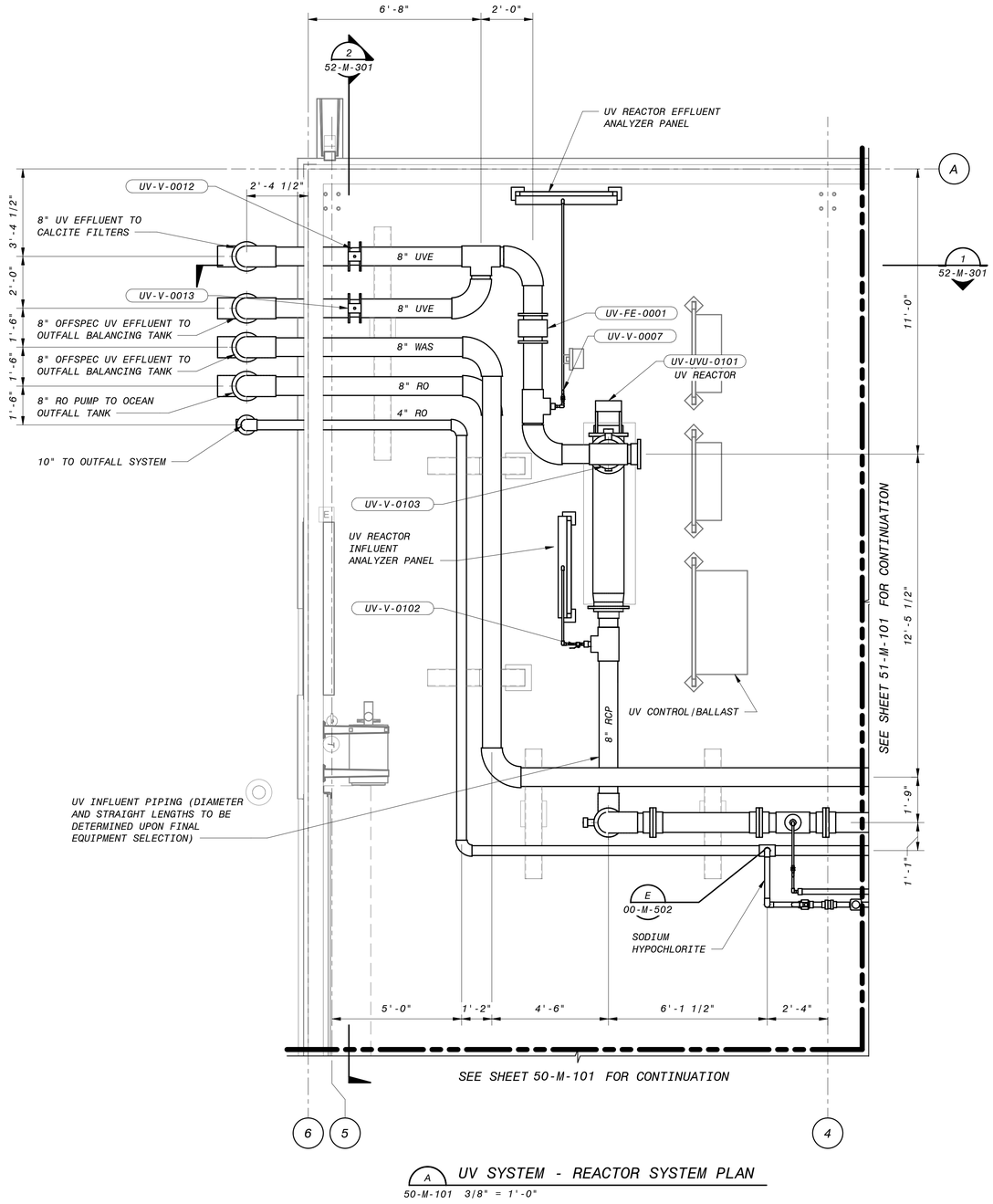

A UV SYSTEM - REACTOR SYSTEM PLAN

50-M-101 3/8" = 1'-0"

NOTES:

12" 0' 1' 2' 3' 4' 5' 6' 7'

3/8" = 1'-0"

NO.	BY	CHK	APP'D
0	KEZ	RWF	EVB

REVISIONS AND RECORD OF USE

5/19/2020 ISSUED FOR CONSTRUCTION

DATE

REGISTERED PROFESSIONAL ENGINEER
ERICK V. BEVINGTON
No. C 78836
CIVIL
STATE OF CALIFORNIA
5/20/2020

BLACK & VEATCH JOINT VENTURE

BLACK & VEATCH

FILANC

CITY OF MORRO BAY
MORRO BAY WATER
RECLAMATION FACILITY (WRF)

RO/UV BUILDING - UV SYSTEM
CIVIL-MECHANICAL
REACTOR SYSTEM PLAN

DESIGNED: KEZ, EVB
DETAILED: MAK
CHECKED: EVB
APPROVED: EVB
DATE: 5/19/2020

0 1/2 1

IF THIS BAR DOES NOT MEASURE 1" THEN DRAWING IS NOT TO FULL SCALE

PROJECT NO.
400530

52-M-101
SHEET
64 OF 412

PLOTTED: 5/19/2020 8:14:14 AM
D400530

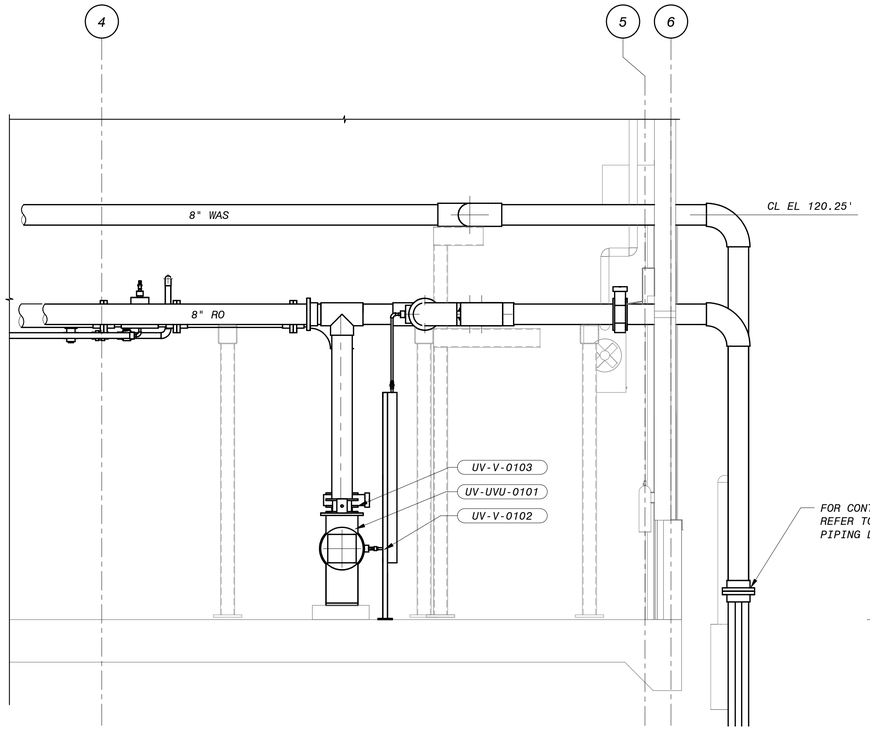

1 SECTION
52-M-101 3/8" = 1'-0"

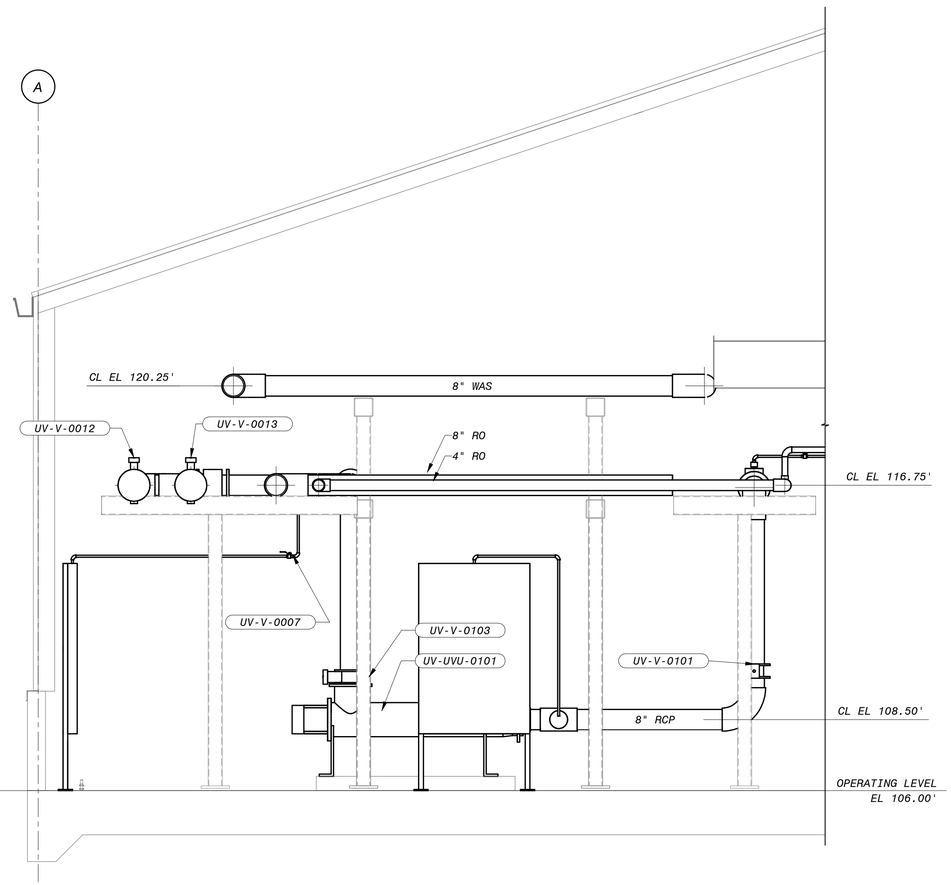

2 SECTION
52-M-101 3/8" = 1'-0"

12" 0' 1' 2' 3' 4' 5' 6' 7'
3/8" = 1'-0"

NO.	BY	CHK	APP
0	KEZ	RWF	EVB

DATE	REVISIONS AND RECORD OF USE
5/19/2020	ISSUED FOR CONSTRUCTION

REGISTERED PROFESSIONAL ENGINEER
ERICK V. BEVINGTON
No. C 78836
CIVIL
STATE OF CALIFORNIA
5/20/2020

BLACK & VEATCH
JOINT VENTURE
BLACK&VEATCH
FILANC

CITY OF MORRO BAY
MORRO BAY WATER
RECLAMATION FACILITY (WRF)

RO/UV BUILDING - UV SYSTEM
CIVIL-MECHANICAL
SECTIONS AND DETAILS 1

DESIGNED: KEZ, EVB
DETAILED: MAK
CHECKED: EVB
APPROVED: EVB
DATE: 5/19/2020

0 1/2 1
IF THIS BAR DOES NOT MEASURE 1" THEN DRAWING IS NOT TO FULL SCALE

PROJECT NO.
400530

52-M-301
SHEET
65 OF 412

PLOTTED: 5/19/2020 8:14:10 AM
D400530

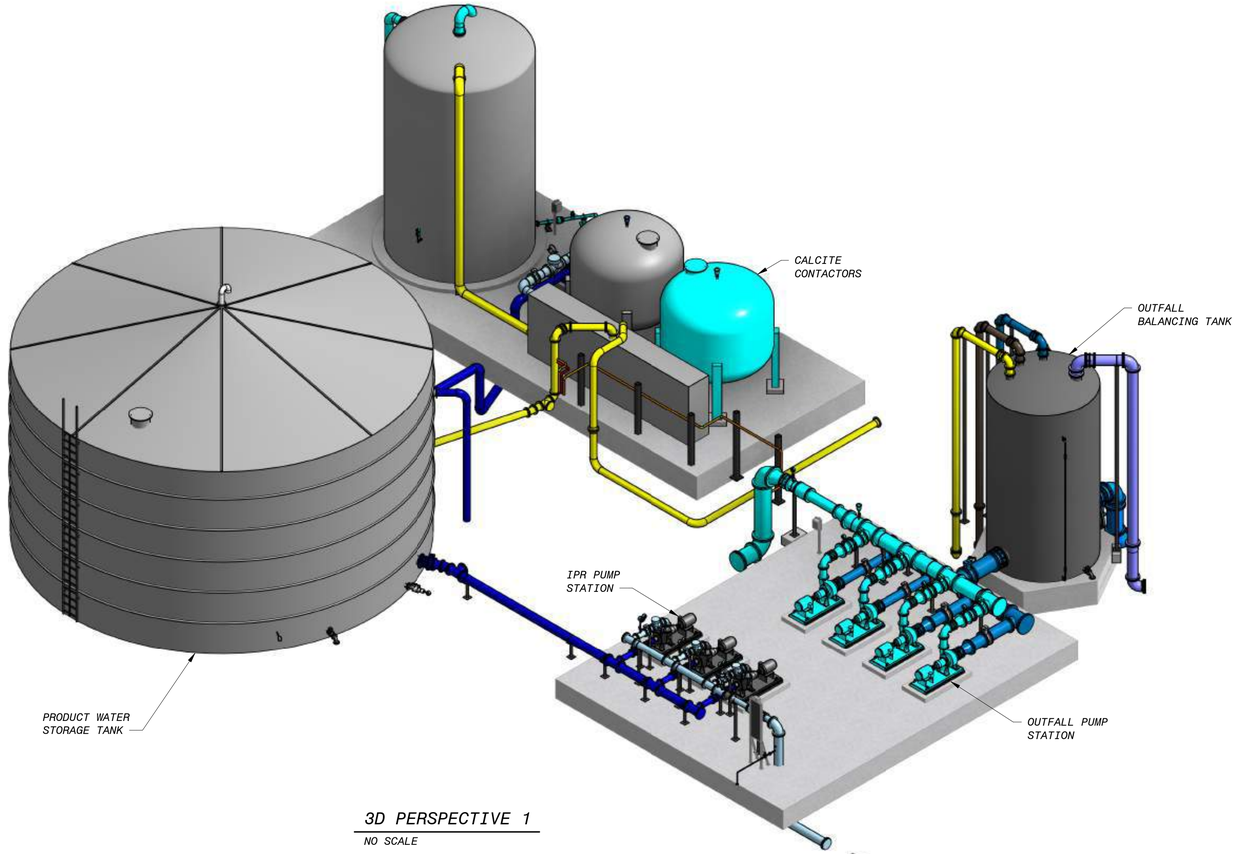

3D PERSPECTIVE 1

NO SCALE

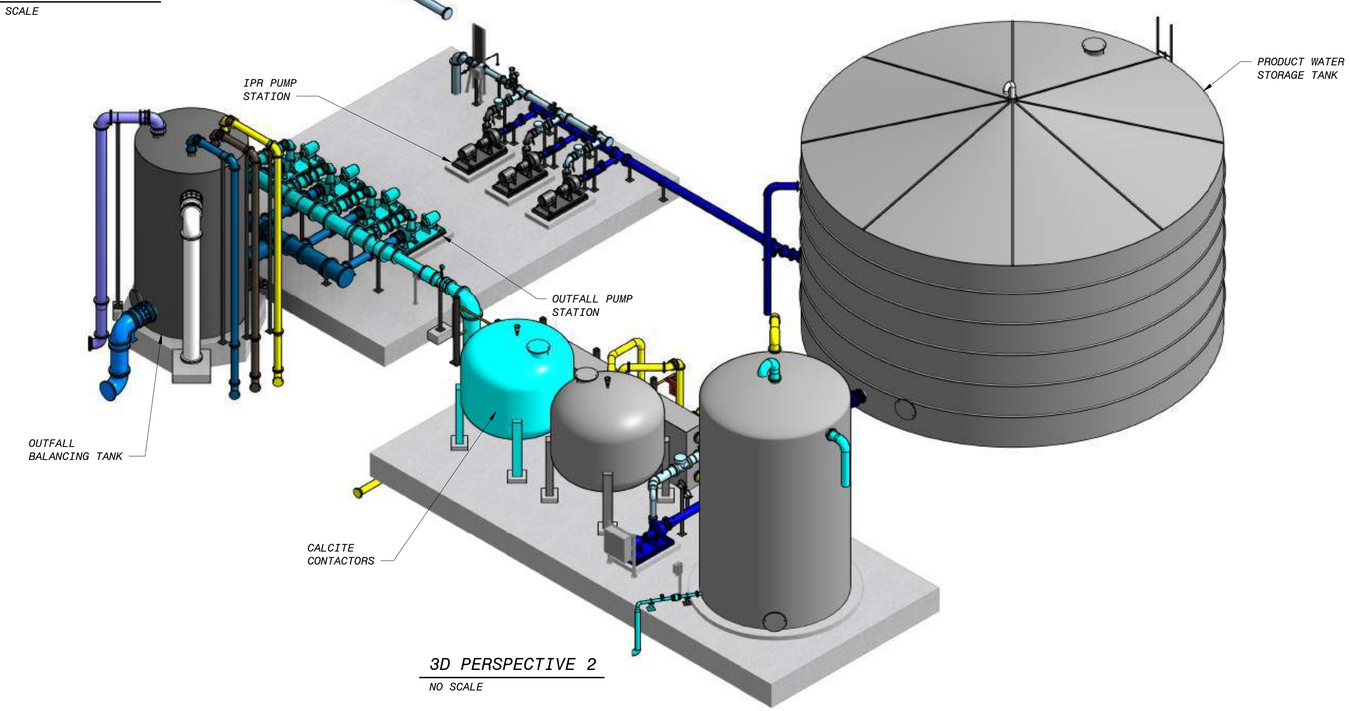

3D PERSPECTIVE 2

NO SCALE

NO.	BY	CHK	APP
0	KEZ	RWF	EVB

DATE	REVISIONS AND RECORD OF USE
5/19/2020	ISSUED FOR CONSTRUCTION

REGISTERED PROFESSIONAL ENGINEER
ERICK V. BEVINGTON
No. C 78836
CIVIL
STATE OF CALIFORNIA
5/20/2020

BLACK & VEATCH
JOINT VENTURE
BLACK & VEATCH
FILANC

CITY OF MORRO BAY
MORRO BAY WATER
RECLAMATION FACILITY (WRF)

PRODUCT WATER AREA - OVERALL
CIVIL-MECHANICAL
3D VIEWS

DESIGNED: KEZ, EVB
DETAILED: MAK
CHECKED: EVB
APPROVED: EVB
DATE: 5/19/2020

0 1/2 1
IF THIS BAR DOES NOT MEASURE 1" THEN DRAWING IS NOT TO FULL SCALE

PROJECT NO.
400530

60-M-001
SHEET
66 OF 412

PLOTTED: 5/19/2020 3:37:06 PM
D400530

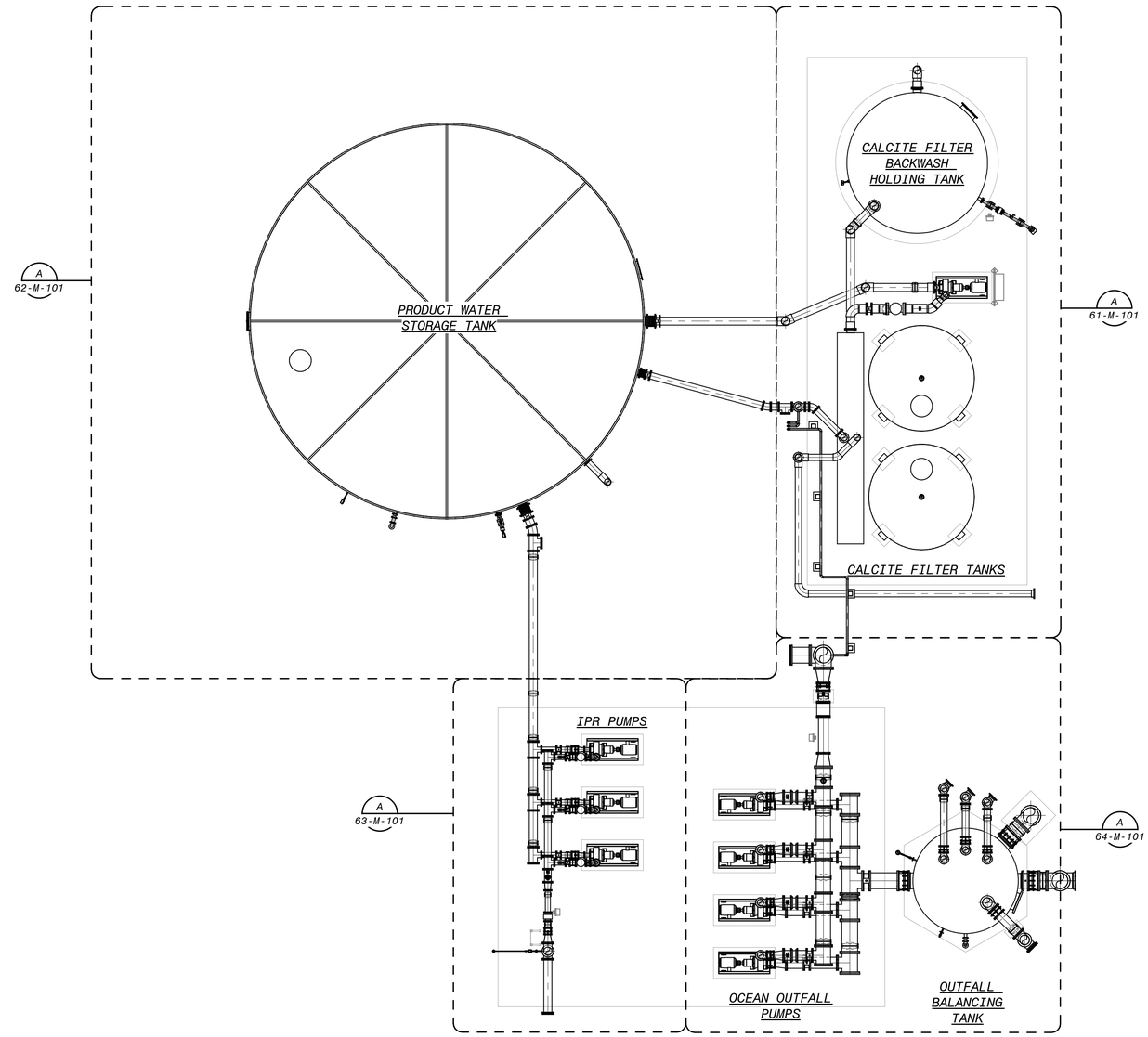

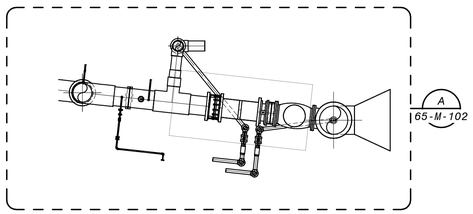

DECHLORINATION STATION

PRODUCT WATER AREA - OVERALL - OPERATING LEVEL PLAN

1/8" = 1'-0"

8' 4' 0' 8' 16'

1/8" = 1'-0"

NO.	BY	CHK	APP
0	KEZ	RWF	EVB

REVISIONS AND RECORD OF USE

ISSUED FOR CONSTRUCTION 5/19/2020

DATE

REGISTERED PROFESSIONAL ENGINEER
PATRICK V. BEVINGTON
No. C 78836
CIVIL
STATE OF CALIFORNIA
5/20/2020

BLACK & VEATCH
JOINT VENTURE
BLACK & VEATCH
FILANC

CITY OF MORRO BAY
MORRO BAY WATER
RECLAMATION FACILITY (WRF)

PRODUCT WATER AREA - OVERALL
CIVIL-MECHANICAL
OPERATING LEVEL PLAN

DESIGNED: KEZ, EVB
DETAILED: MAK
CHECKED: EVB
APPROVED: EVB
DATE: 5/19/2020

0 1/2 1
IF THIS BAR DOES NOT MEASURE 1" THEN DRAWING IS NOT TO FULL SCALE

PROJECT NO.
400530

60-M-101
SHEET
67 OF 412

PLOTTED: 5/19/2020 3:37:11 PM
D400530

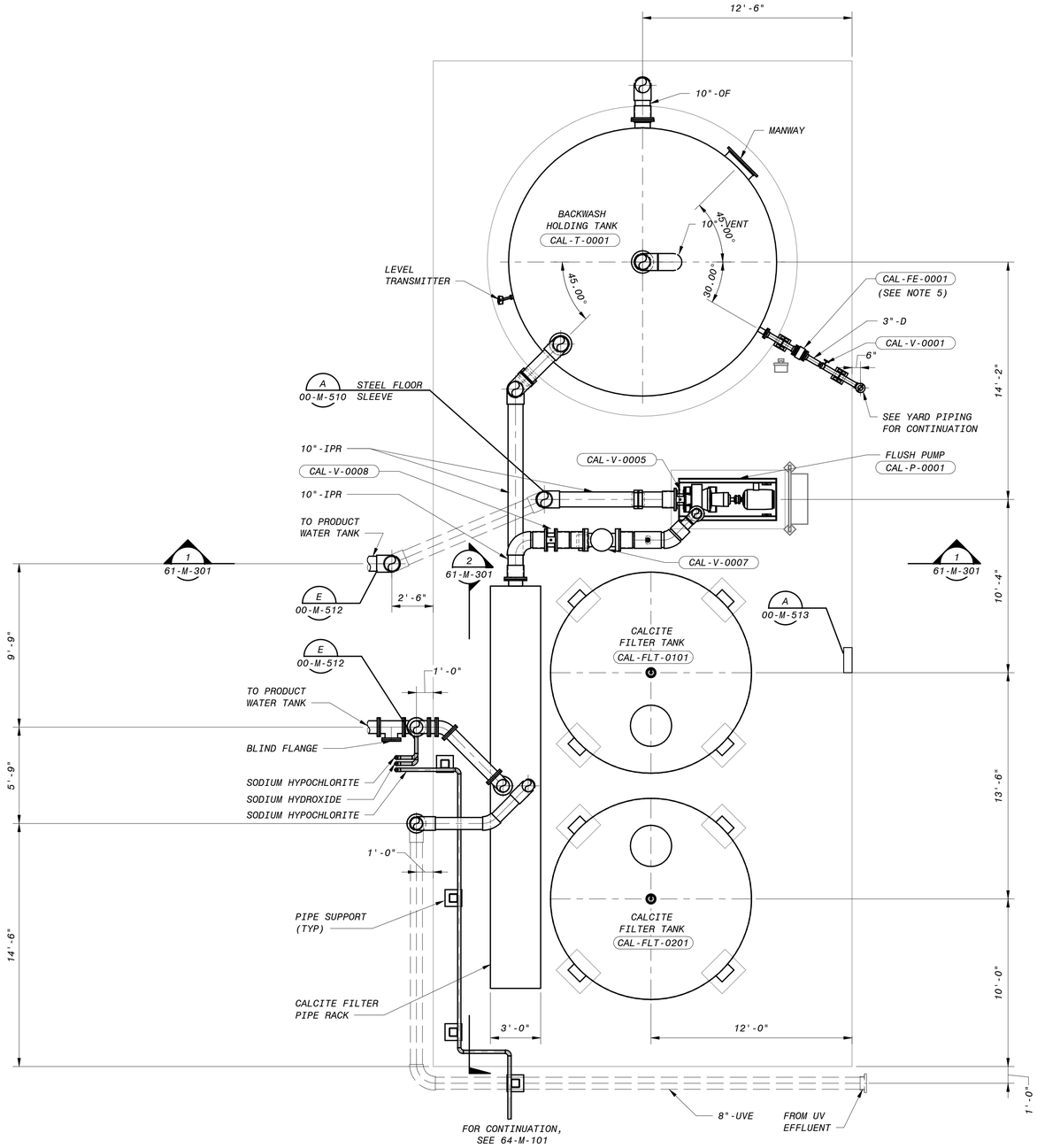

A PRODUCT WATER AREA - CALCITE CONTACTOR - PLAN

60-M-101 1/4" = 1'-0"

NOTES:

1. PIPING CONFIGURATION WITHIN THE CALCITE CONTACTOR SKID WILL BE PROVIDED BY THE CALCITE CONTACTOR SYSTEM SUPPLIER.
2. PIPING SHOWN GOING TO AND FROM THE EQUIPMENT PAD SHALL BE COORDINATED WITH RECEIPT OF CALCITE CONTACTOR SUBMITTALS.
3. NOTE THE EQUIPMENT SHOWN WITHIN THE EQUIPMENT PAD IS NOT FINAL. FINAL DRAWINGS WILL PROVIDED WHEN EQUIPMENT IS PROCURED.
4. EQUIPMENT SHOWN REPRESENTS THE AVAILABLE SPACE FOR THE CALCITE CONTACTOR.
5. NOTE THAT THE CALCITE CONTACTOR BACKWASH TANK DRAINS TO THE SEWER. THE TANK SHALL NOT BE DRAINED IF ANY OF THE FOLLOWING ACTIVITIES ARE ALSO OCCURRING:
   -BELT FILTER PRESS IS IN OPERATION.
   -STORM WATER OUTLET CONTROL STRUCTURE IS PUMPING FLOW TO THE SEWER.
   -IF MORE THAN THREE AREAS WITH SEWER DRAINS ARE BEING HOSED DOWN AT ONCE.

4' 2' 0' 4' 8'

1/4" = 1'-0"

NO.	BY	CHK	APP	DATE	REVISIONS AND RECORD OF USE
0	KEZ	RWF	EVB	5/19/2020	ISSUED FOR CONSTRUCTION

REGISTERED PROFESSIONAL ENGINEER
ERICK V. BEVINGTON
No. C 78836
CIVIL
STATE OF CALIFORNIA
5/20/2020

BLACK & VEATCH JOINT VENTURE
BLACK & VEATCH
FILANC

CITY OF MORRO BAY
MORRO BAY WATER RECLAMATION FACILITY (WRF)

PRODUCT WATER AREA - CALCITE CONTACTOR CIVIL-MECHANICAL PLAN

DESIGNED: KEZ, EVB
DETAILED: MAK
CHECKED: EVB
APPROVED: EVB
DATE: 5/19/2020

0 1/2 1
IF THIS BAR DOES NOT MEASURE 1" THEN DRAWING IS NOT TO FULL SCALE

PROJECT NO. 400530

61-M-101
SHEET 68 OF 412

PLOTTED: 5/19/2020 3:37:12 PM
D400530

NOTES:

1. PIPING CONFIGURATION WITHIN THE CALCITE CONTACTOR SYSTEM WILL BE PROVIDED BY THE CALCITE SYSTEM SUPPLIER (CSS). DIMENSIONS AND ELEVATIONS SHOWN ARE APPROXIMATE. CONTRACTOR SHALL COORDINATE WITH THE CSS ON THE FINAL FOOTPRINT AND LAYOUT OF THE CALCITE CONTACTOR SYSTEM.

2. PIPING SHOWN GOING TO AND FROM THE EQUIPMENT PAD SHALL BE COORDINATED.

3. EXTEND AT LEAST 3" ABOVE FINISHED GRADE. P-TRAP SHALL BE LOCATED DEEP ENOUGH SUCH THAT IT CONNECTS TO SAN PIPING PER THE YARD PIPING DRAWINGS.

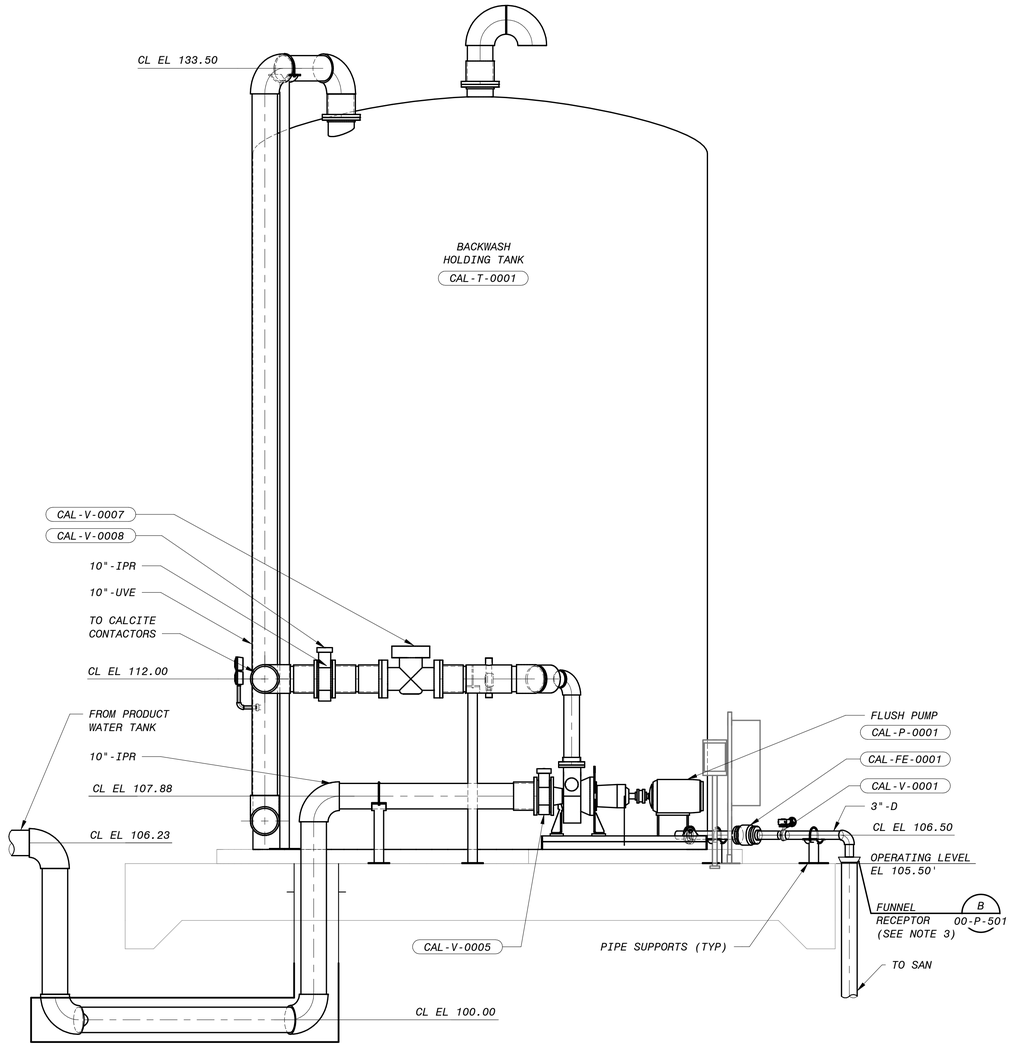

1 SECTION
61-M-101 3/8" = 1'-0"

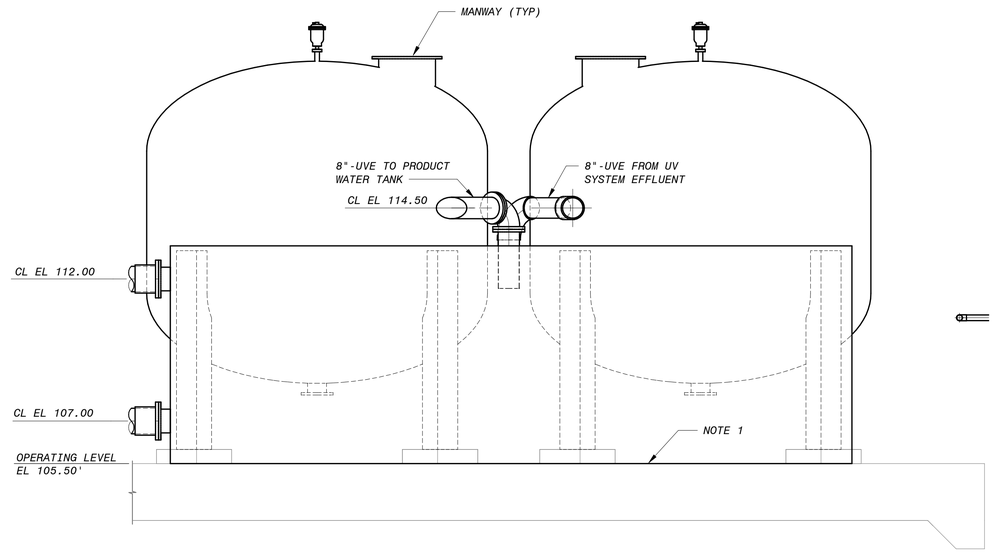

2 SECTION
61-M-101 3/8" = 1'-0"

12" 0' 1' 2' 3' 4' 5' 6' 7'
3/8" = 1'-0"

NO.	BY	CHK	APP
0	KEZ	RWF	EVB

DATE	REVISIONS AND RECORD OF USE
5/19/2020	ISSUED FOR CONSTRUCTION

REGISTERED PROFESSIONAL ENGINEER
ERICK V. BEVINGTON
No. C 78836
CIVIL
STATE OF CALIFORNIA
5/20/2020

BLACK & VEATCH
JOINT VENTURE
BLACK & VEATCH
FILANC

CITY OF MORRO BAY
MORRO BAY WATER RECLAMATION FACILITY (WRF)

PRODUCT WATER AREA - CALCITE CONTACTOR
CIVIL-MECHANICAL
SECTIONS AND DETAILS

DESIGNED: KEZ, EVB
DETAILED: MAK
CHECKED: EVB
APPROVED: EVB
DATE: 5/19/2020

0 1/2 1
IF THIS BAR DOES NOT MEASURE 1" THEN DRAWING IS NOT TO FULL SCALE

PROJECT NO.
400530

61-M-301
SHEET
69 OF 412

PLOTTED: 5/19/2020 3:37:15 PM
D400530

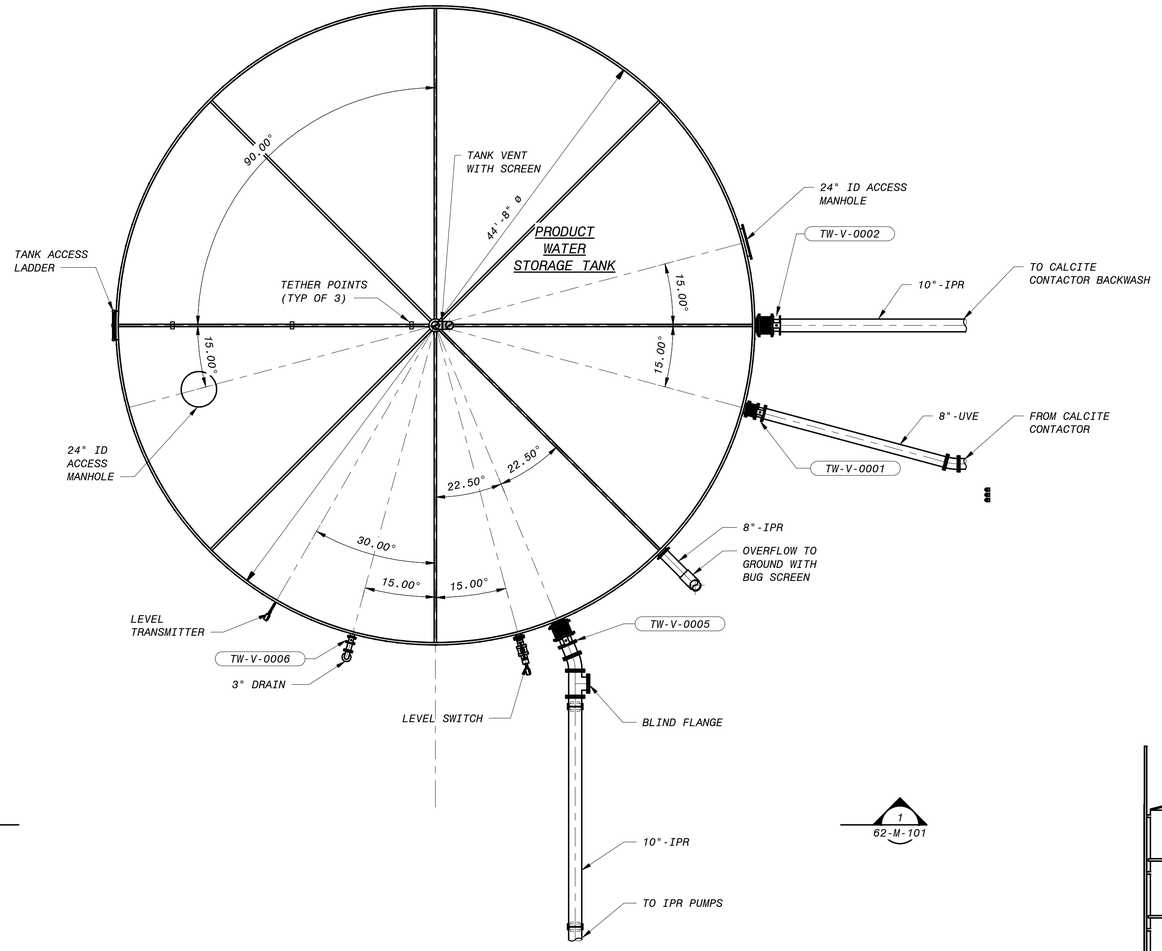

A PRODUCT WATER AREA - PRODUCT WATER STORAGE TANK - PLAN

60-M-101 3/16" = 1'-0"

1 62-M-101

1 62-M-101

NOTES:

1. TANK ACCESSORIES AND NOZZLE SIZES AND LOCATIONS PER NOZZLE SCHEDULE IN SECTION 33 16 13.13.
2. TANK FOUNDATION DESIGN SHALL BE COMPLETED BY THE TANK SUPPLIER PER SECTION 33 16 13.13.
3. PIPE SUPPORTS ON THE TANK SHALL BE PROVIDED BY THE SUPPLIER.
4. FINAL TANK DIAMETER AND HEIGHT WILL BE DETERMINED BY TANK SUPPLIER TO PROVIDE OPTIMAL DESIGN. THE CENTERLINE ELEVATION SHOWN ON THE DRAWINGS IS THE MAXIMUM ALLOWABLE LEVEL. THE DIAMETER OF THE TANK MAY CHANGE. OVERFLOW PIPE SIZE TO BE DETERMINED BY TANK SUPPLIER.

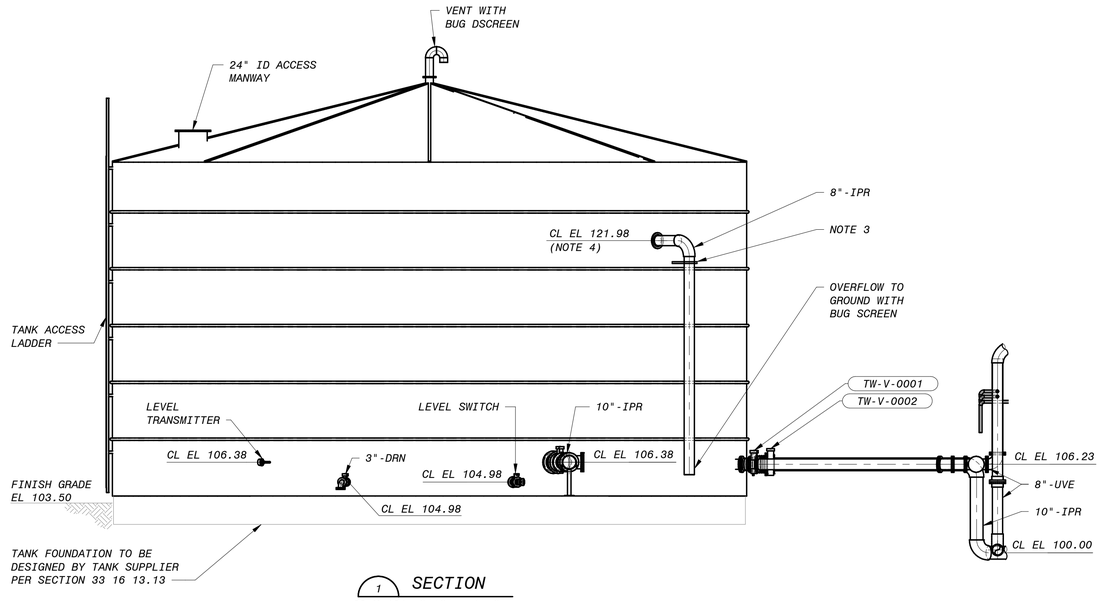

1 SECTION

62-M-101 3/16" = 1'-0"

6" 4' 2' 0' 5' 10'

3/16" = 1'-0"

NO.	BY	CHK	APP	DATE	REVISIONS AND RECORD OF USE
0	KEZ	RWF	EVB	5/19/2020	ISSUED FOR CONSTRUCTION

REGISTERED PROFESSIONAL ENGINEER
ERICK V. BEVINGTON
No. C 78836
CIVIL
STATE OF CALIFORNIA
5/20/2020

BLACK & VEATCH
JOINT VENTURE
BLACK & VEATCH
FILANC

CITY OF MORRO BAY
MORRO BAY WATER
RECLAMATION FACILITY (WRF)

PRODUCT WATER AREA
PRODUCT WATER STORAGE TANK
CIVIL-MECHANICAL
PLAN, SECTIONS AND DETAILS

DESIGNED: KEZ, EVB
DETAILED: MAK
CHECKED: EVB
APPROVED: EVB
DATE: 5/19/2020

0 1/2 1
IF THIS BAR DOES NOT MEASURE 1" THEN DRAWING IS NOT TO FULL SCALE

PROJECT NO.
400530

62-M-101
SHEET
70 OF 412

PLOTTED: 5/19/2020 3:37:17 PM
D400530

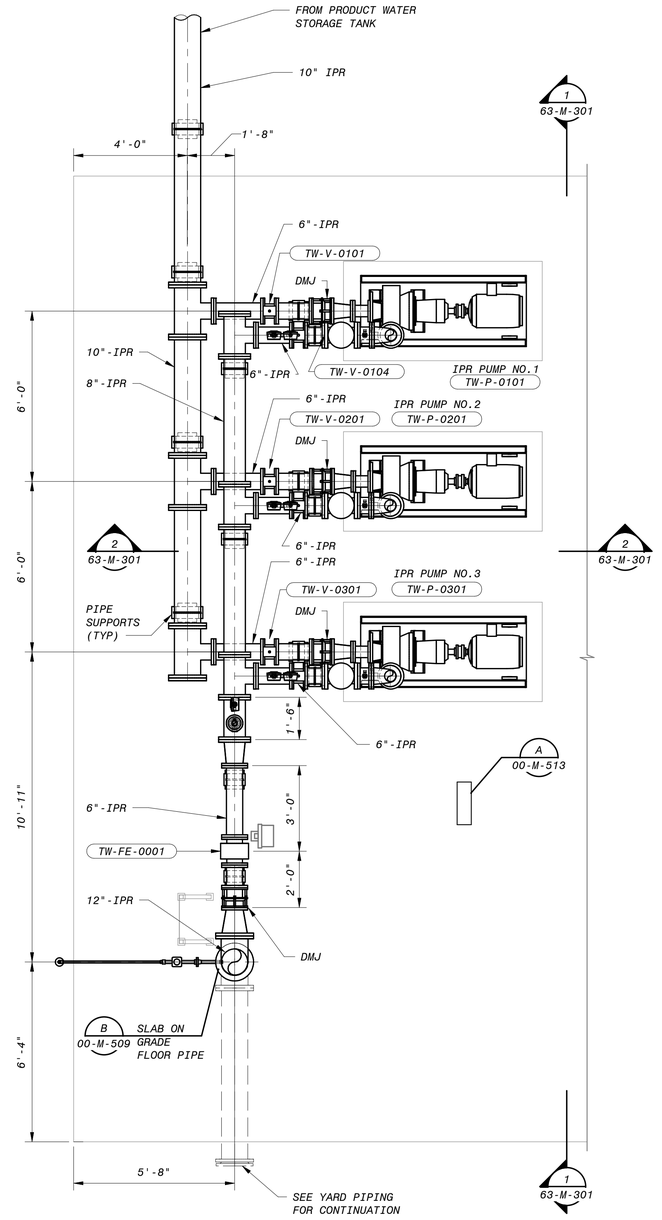

A 60-M-101 PRODUCT WATER AREA - IPR PRODUCT WATER PUMP STATION - PLAN

3/8" = 1'-0"

12" 0' 1' 2' 3' 4' 5' 6' 7'

3/8" = 1'-0"

NO.	BY	CHK	APP
0	KEZ	RWF	EVB

REVISIONS AND RECORD OF USE

ISSUED FOR CONSTRUCTION 5/19/2020

DATE

REGISTERED PROFESSIONAL ENGINEER
RICK V. BEVINGTON
No. C 78836
CIVIL
STATE OF CALIFORNIA
5/20/2020

BLACK & VEATCH JOINT VENTURE
BLACK & VEATCH
FILANC

CITY OF MORRO BAY
MORRO BAY WATER RECLAMATION FACILITY (WRF)

PRODUCT WATER AREA
IPR PRODUCT WATER PUMP STATION
CIVIL-MECHANICAL
PLAN

DESIGNED: KEZ, EVB
DETAILED: MAK
CHECKED: EVB
APPROVED: EVB
DATE: 5/19/2020

0 1/2 1

IF THIS BAR DOES NOT MEASURE 1" THEN DRAWING IS NOT TO FULL SCALE

PROJECT NO.
400530

63-M-101
SHEET
71 OF 412

PLOTTED: 5/19/2020 3:37:19 PM
D400530

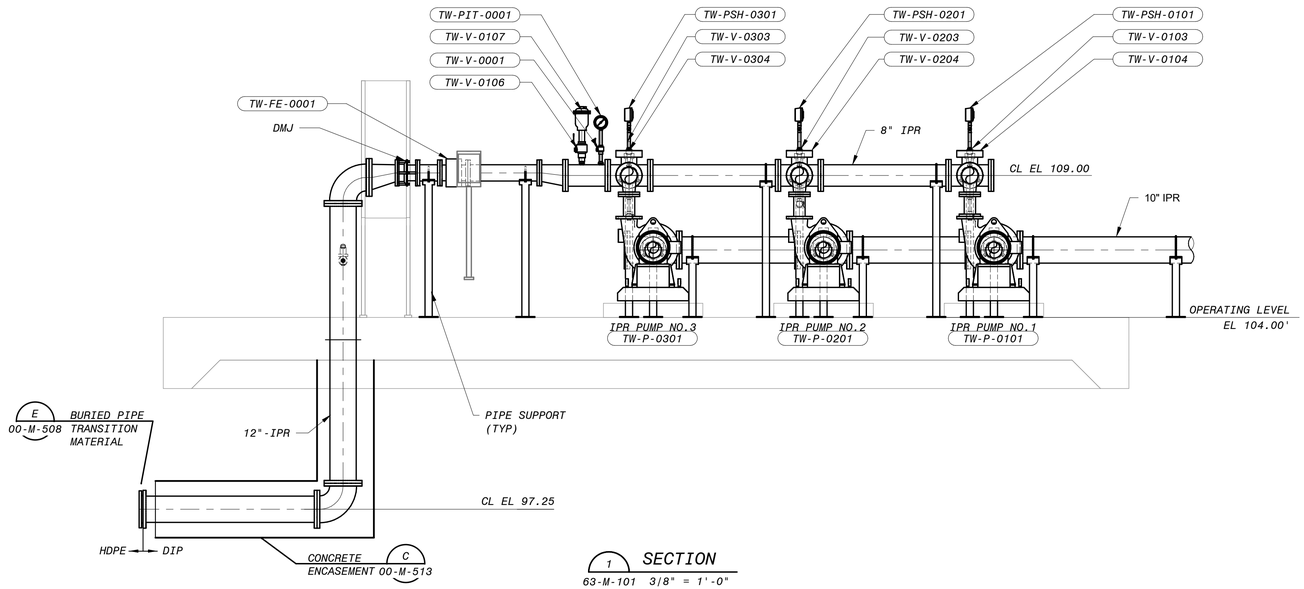

1 SECTION
63-M-101 3/8" = 1'-0"

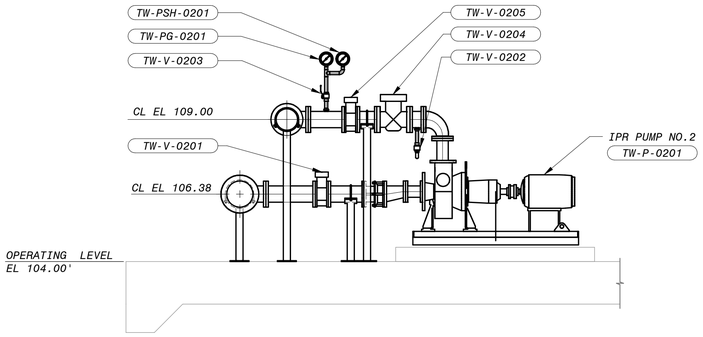

2 SECTION
63-M-101 3/8" = 1'-0"

12" 0' 1' 2' 3' 4' 5' 6' 7'
3/8" = 1'-0"

NO.	BY	CHK	APP	DATE	REVISIONS AND RECORD OF USE
0	KEZ	RWF	EVB	5/19/2020	ISSUED FOR CONSTRUCTION

REGISTERED PROFESSIONAL ENGINEER
ERICK V. BEVINGTON
No. C 78836
CIVIL
STATE OF CALIFORNIA
5/20/2020

BLACK & VEATCH
JOINT VENTURE
BLACK & VEATCH
FILANC

CITY OF MORRO BAY
MORRO BAY WATER
RECLAMATION FACILITY (WRF)

PRODUCT WATER AREA
IPR PRODUCT WATER PUMP STATION
CIVIL-MECHANICAL
SECTIONS AND DETAILS 1

DESIGNED: KEZ, EVB
DETAILED: MAK
CHECKED: EVB
APPROVED: EVB
DATE: 5/19/2020

0 1/2 1
IF THIS BAR DOES NOT MEASURE 1" THEN DRAWING IS NOT TO FULL SCALE

PROJECT NO.
400530

63-M-301
SHEET
72 OF 412

PLOTTED: 5/19/2020 3:37:22 PM
D400530

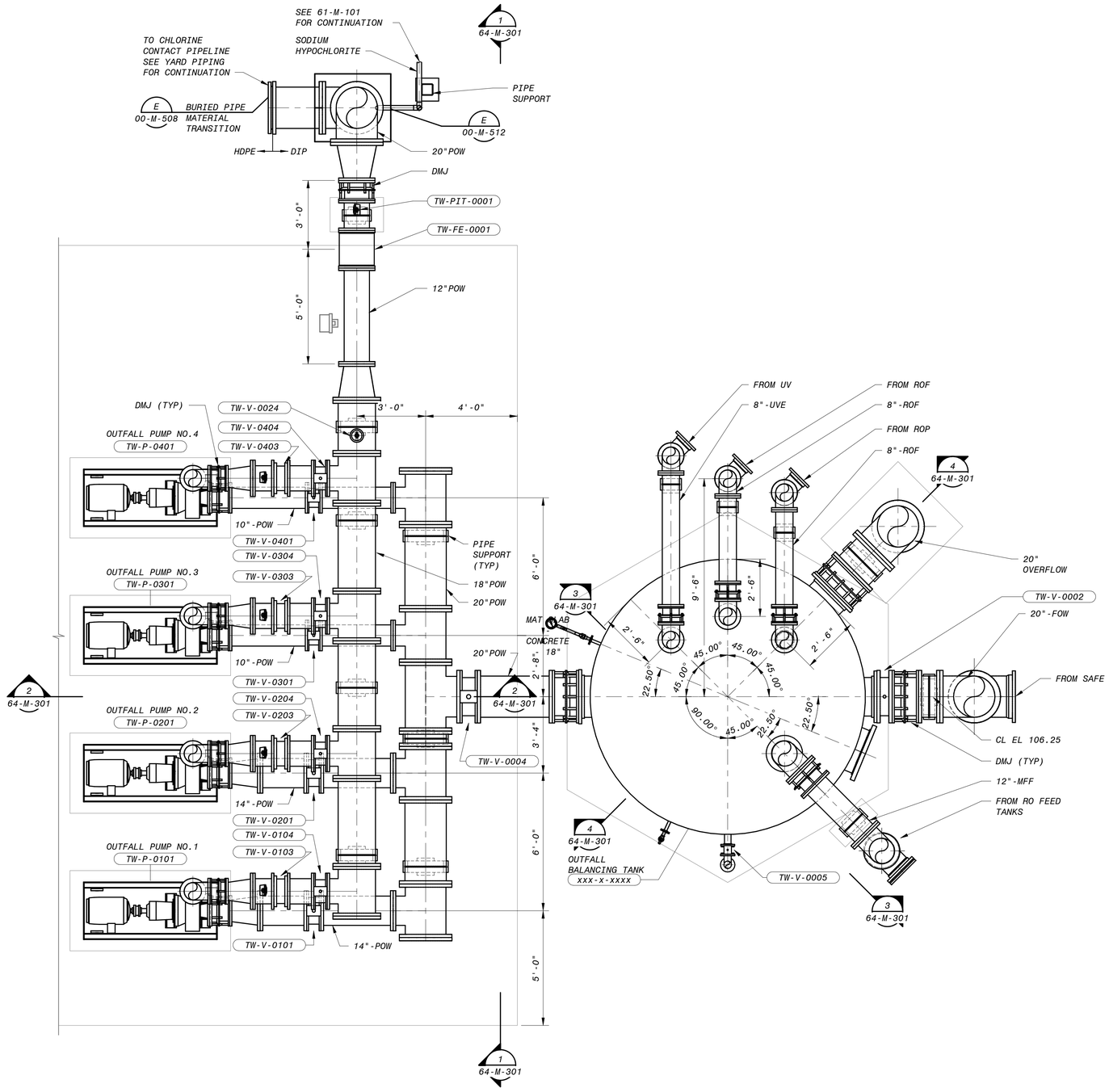

PRODUCT WATER AREA - OUTFALL PUMP STATION - PLAN

3/8" = 1'-0"

12" 0' 1' 2' 3' 4' 5' 6' 7'

3/8" = 1'-0"

NO.	BY	CHK	APP
0	KEZ	RWF	EVB

DATE	REVISIONS AND RECORD OF USE
5/19/2020	ISSUED FOR CONSTRUCTION

REGISTERED PROFESSIONAL ENGINEER
ERICK V. BEVINGTON
No. C 78836
CIVIL
STATE OF CALIFORNIA
5/20/2020

BLACK & VEATCH
JOINT VENTURE
BLACK & VEATCH
FILANC

CITY OF MORRO BAY
MORRO BAY WATER
RECLAMATION FACILITY (WRF)

PRODUCT WATER AREA - OUTFALL PUMP STATION
CIVIL-MECHANICAL
PLAN

DESIGNED: KEZ, EVB
DETAILED: MAK
CHECKED: EVB
APPROVED: EVB
DATE: 5/19/2020

0 1/2 1
IF THIS BAR DOES NOT MEASURE 1" THEN DRAWING IS NOT TO FULL SCALE

PROJECT NO.
400530

64-M-101
SHEET
73 OF 412

PLOTTED: 5/19/2020 3:37:26 PM
D400530

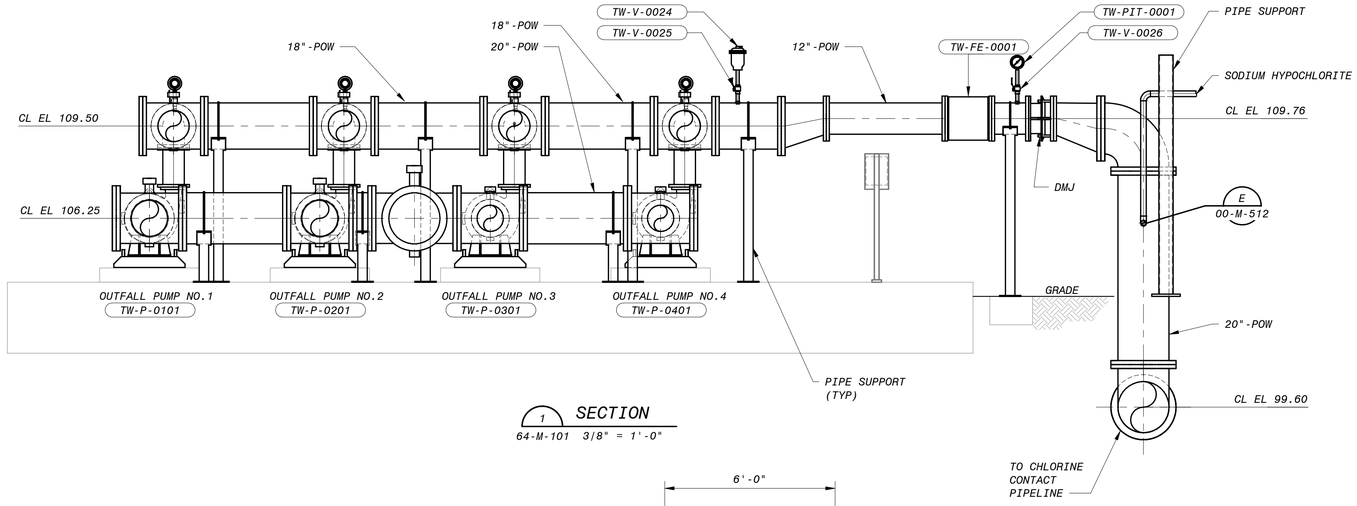

1 SECTION
64-M-101 3/8" = 1'-0"

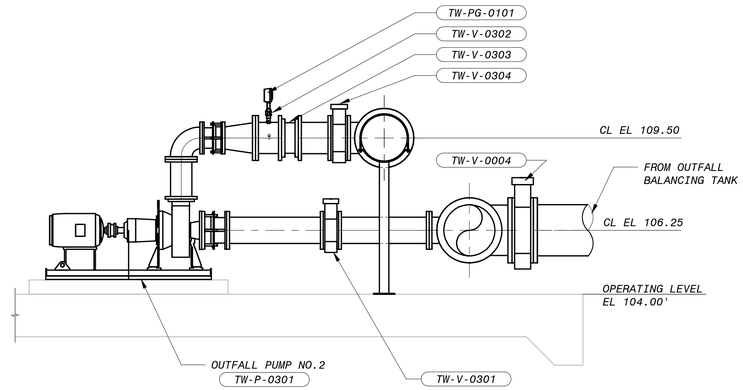

2 SECTION
64-M-101 3/8" = 1'-0"

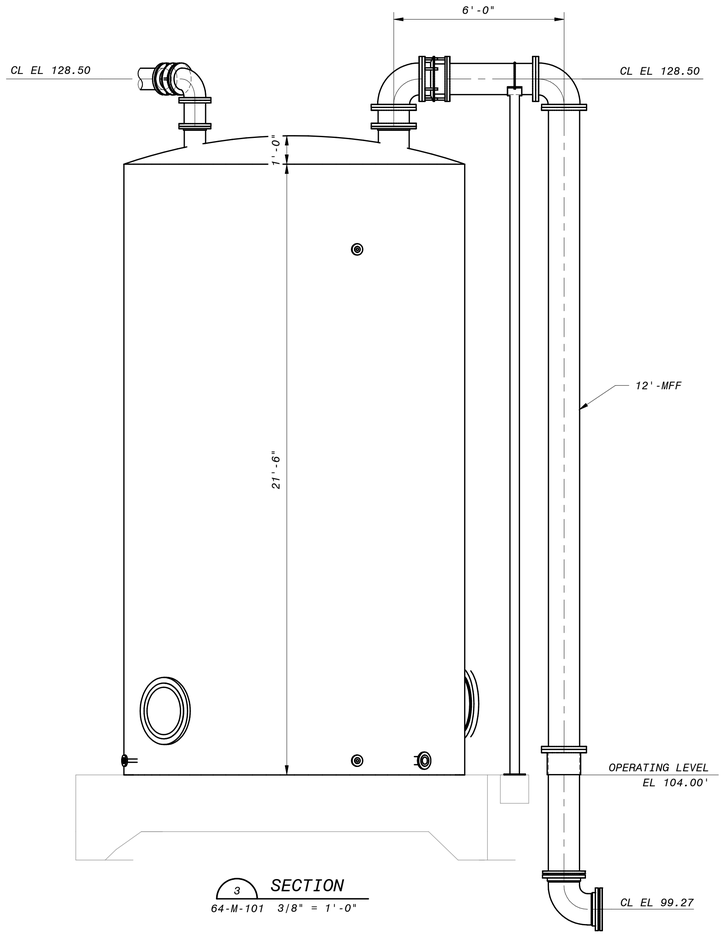

3 SECTION
64-M-101 3/8" = 1'-0"

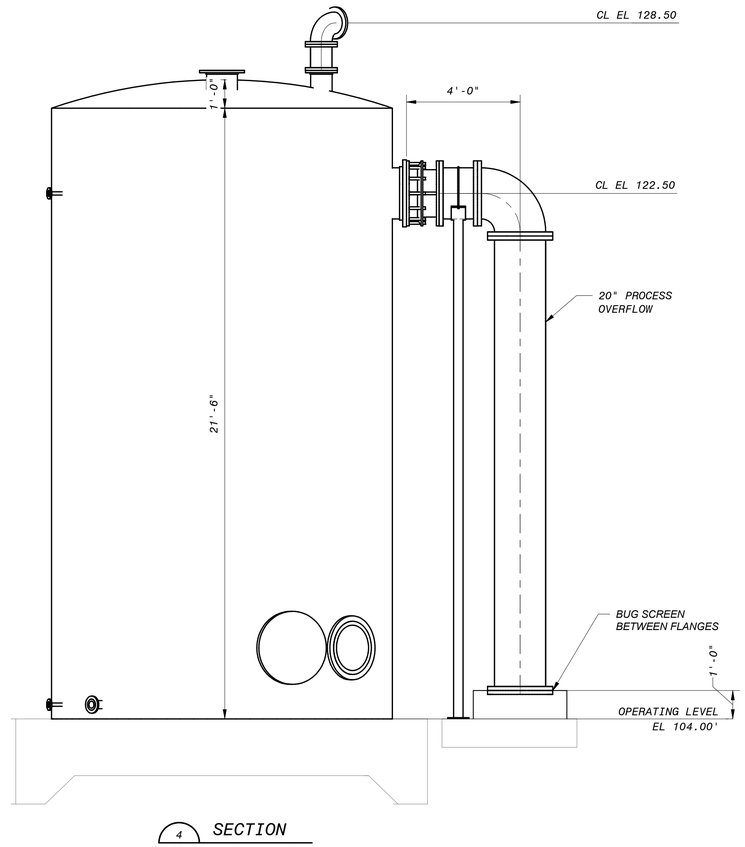

4 SECTION
64-M-101 3/8" = 1'-0"

12" 0' 1' 2' 3' 4' 5' 6' 7'
3/8" = 1'-0"

NO.	BY	CHK	APP
0	KEZ	RWF	EVB

REVISIONS AND RECORD OF USE

5/19/2020 ISSUED FOR CONSTRUCTION

DATE

REGISTERED PROFESSIONAL ENGINEER
ERICK V. BEVINGTON
No. C 78836
CIVIL
STATE OF CALIFORNIA
5/20/2020

BLACK & VEATCH
JOINT VENTURE
BLACK & VEATCH
FILANC

CITY OF MORRO BAY
MORRO BAY WATER
RECLAMATION FACILITY (WRF)

PRODUCT WATER AREA - OUTFALL PUMP STATION
CIVIL-MECHANICAL
SECTIONS AND DETAILS 1

DESIGNED: KEZ, EVB
DETAILED: MAK
CHECKED: EVB
APPROVED: EVB
DATE: 5/19/2020

0 1/2 1
IF THIS BAR DOES NOT MEASURE 1" THEN DRAWING IS NOT TO FULL SCALE

PROJECT NO.
400530

64-M-301
SHEET
74 OF 412

PLOTTED: 5/19/2020 3:37:30 PM
D400530

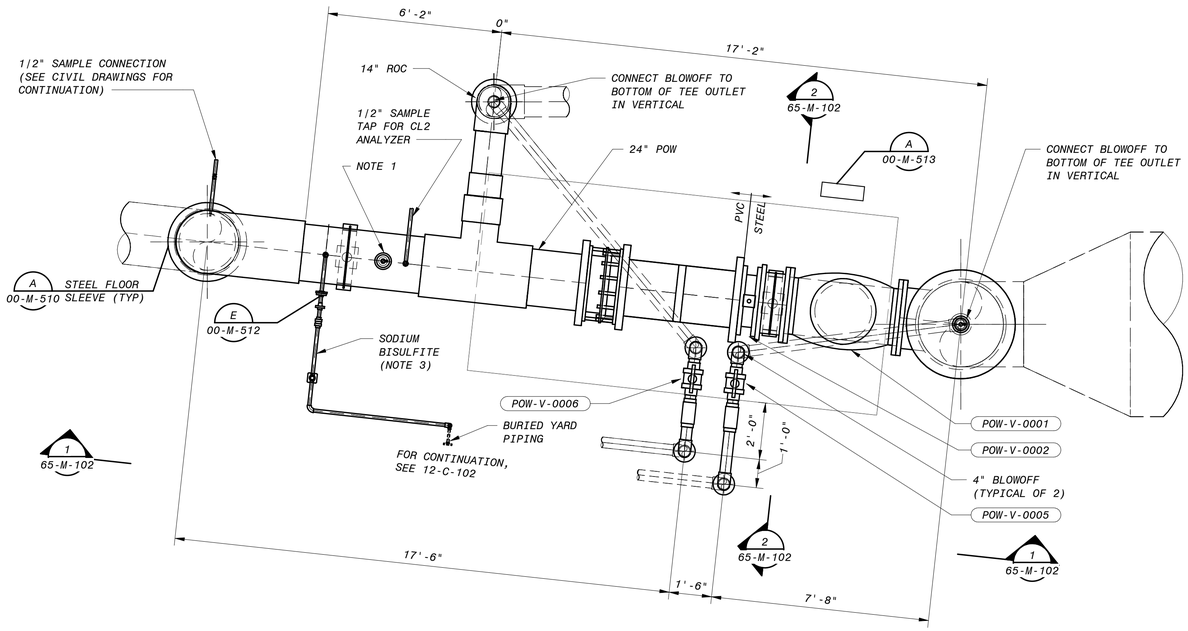

PRODUCT WATER AREA - DECHLORINATION FACILITY - PLAN

3/8" = 1'-0"

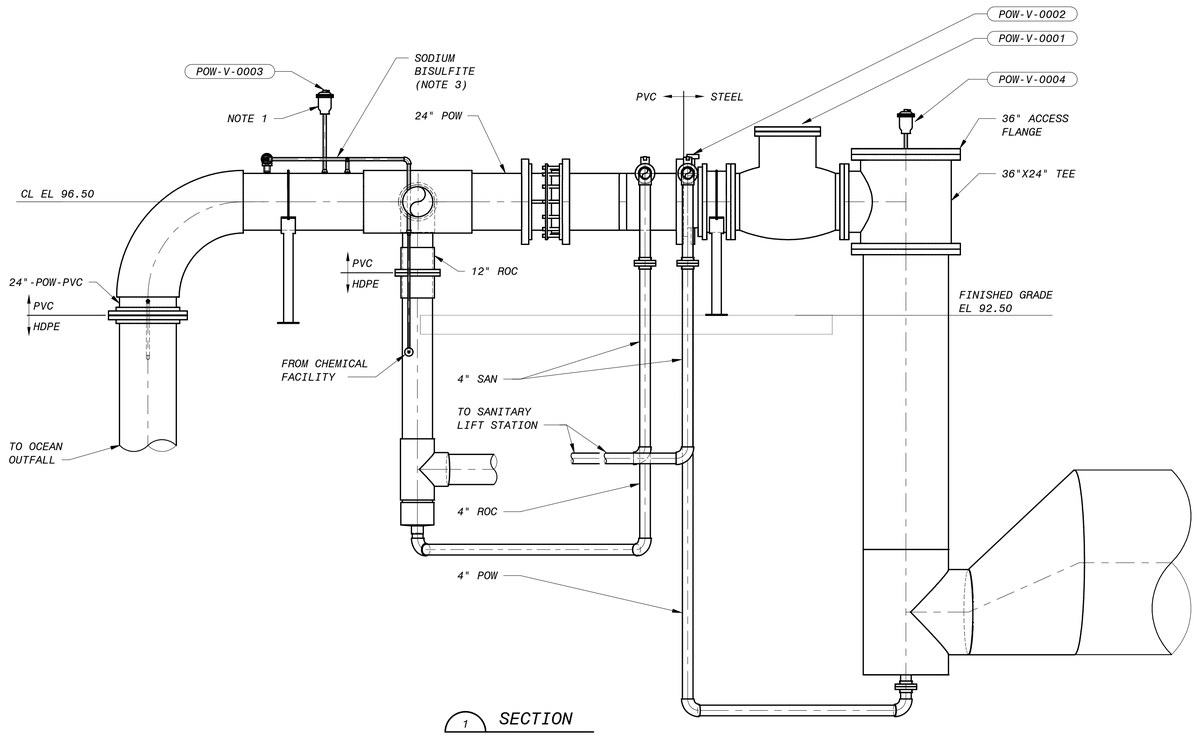

1 SECTION

65-M-102 3/8" = 1'-0"

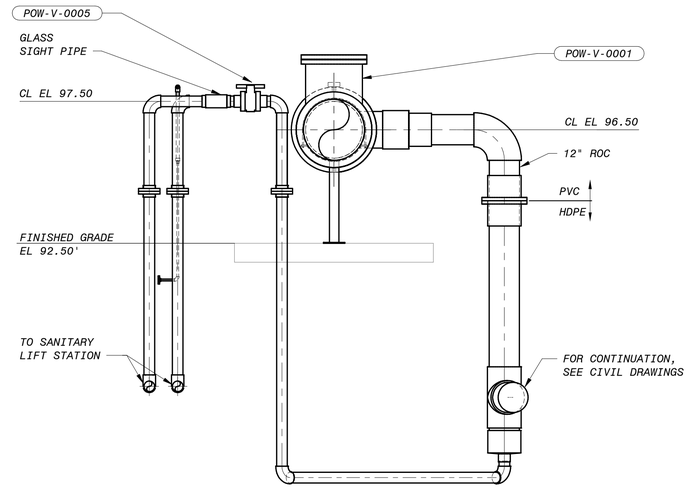

2 SECTION

65-M-102 3/8" = 1'-0"

NOTES:

1. VALVE SHALL BE 3" VENT TECH MODEL SWG.
2. DECHLORINATION STATION IS LOCATED NEAR THE OPERATIONS BUILDING AND THE WATER AND COLLECTIONS STORAGE SHED. SEE CIVIL SITE PLANS FOR EXACT LOCATION.
3. ABOVE GRADE SODIUM BISULFITE PIPING SHALL BE INSULATED AND HEAT TRACED.

NO.	BY	CHK	APP	DATE	REVISIONS AND RECORD OF USE
0	KEZ	RWF	EVB	5/19/2020	ISSUED FOR CONSTRUCTION

REGISTERED PROFESSIONAL ENGINEER
ERICK V. BEVINGTON
No. C 78836
CIVIL
STATE OF CALIFORNIA
5/20/2020

BLACK & VEATCH
JOINT VENTURE
FILANC
BLACK & VEATCH

CITY OF MORRO BAY
MORRO BAY WATER RECLAMATION FACILITY (WRF)

PRODUCT WATER AREA
DECHLORINATION FACILITY
CIVIL-MECHANICAL
PLAN, SECTIONS AND DETAILS

DESIGNED: KEZ, EVB
DETAILED: RMB
CHECKED: EVB
APPROVED: EVB
DATE: 5/19/2020

0 1/2 1
IF THIS BAR DOES NOT MEASURE 1" THEN DRAWING IS NOT TO FULL SCALE

12" 0' 1' 2' 3' 4' 5' 6' 7'
3/8" = 1'-0"

PROJECT NO.
400530

65-M-102
SHEET
75 OF 412

PLOTTED: 5/19/2020 3:37:33 PM
D400530

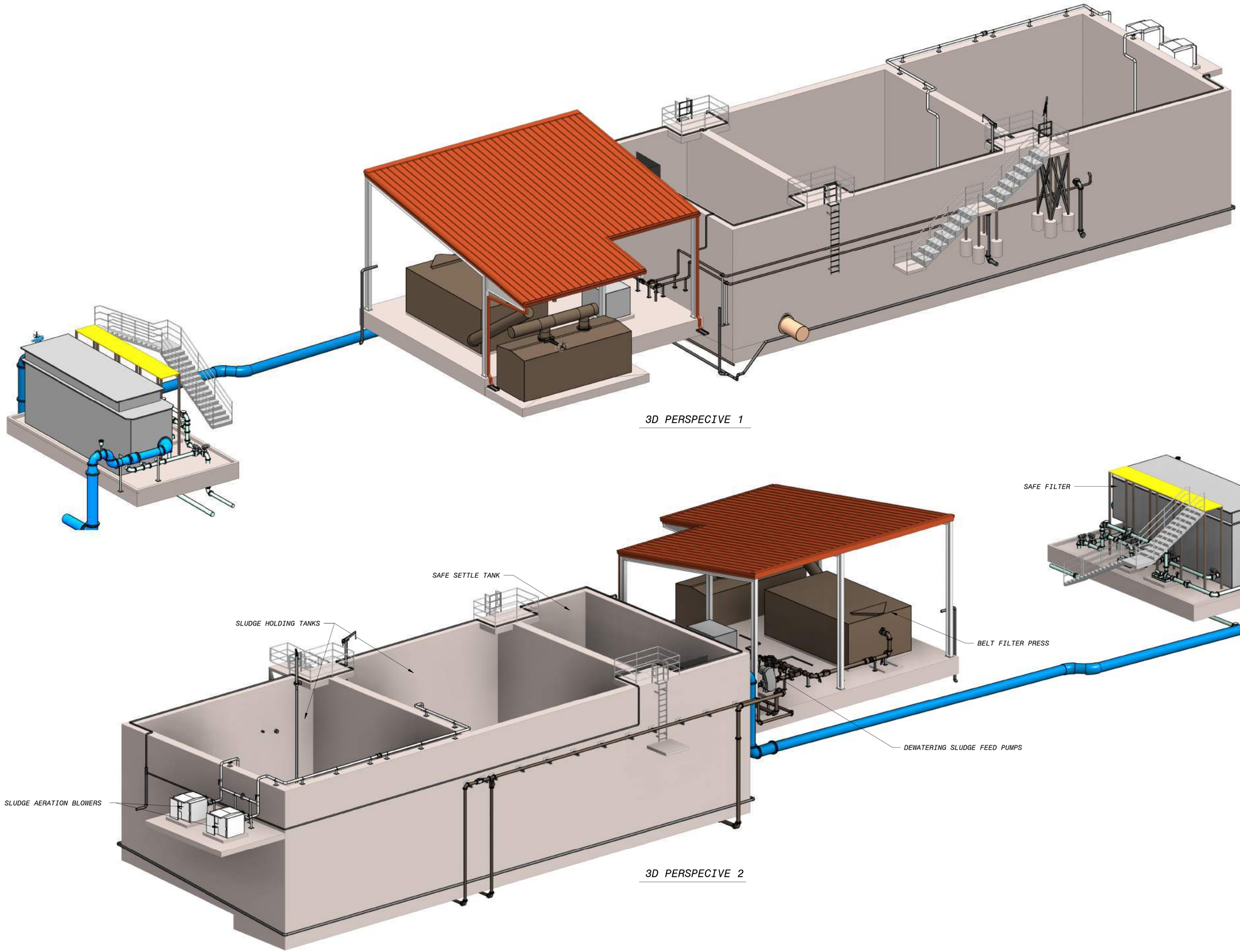

3D PERSPECIVE 1

3D PERSPECIVE 2

NO.	BY	CHK	APP'D	DATE	REVISIONS AND RECORD OF USE
0	KEZ	RWF	EVB	5/19/2020	ISSUED FOR CONSTRUCTION

REGISTERED PROFESSIONAL ENGINEER
KATHRYN ELIZABETH ZUSY
C-83441
CIVIL
STATE OF CALIFORNIA
5/19/20

BLACK & VEATCH
JOINT VENTURE
BLACK&VEATCH
FILANC

CITY OF MORRO BAY
MORRO BAY WATER
RECLAMATION FACILITY (WRF)

RESIDUALS AREA - OVERALL
CIVIL-MECHANICAL
3D VIEWS

DESIGNED: KEZ
DETAILED: MAK
CHECKED: EVB
APPROVED: EVB
DATE: 5/19/2020

0 1/2 1
IF THIS BAR DOES NOT MEASURE 1" THEN DRAWING IS NOT TO FULL SCALE

PROJECT NO.
400530

70-M-001
SHEET
76 OF 412

PLOTTED: 5/19/2020 3:33:47 PM
D400530

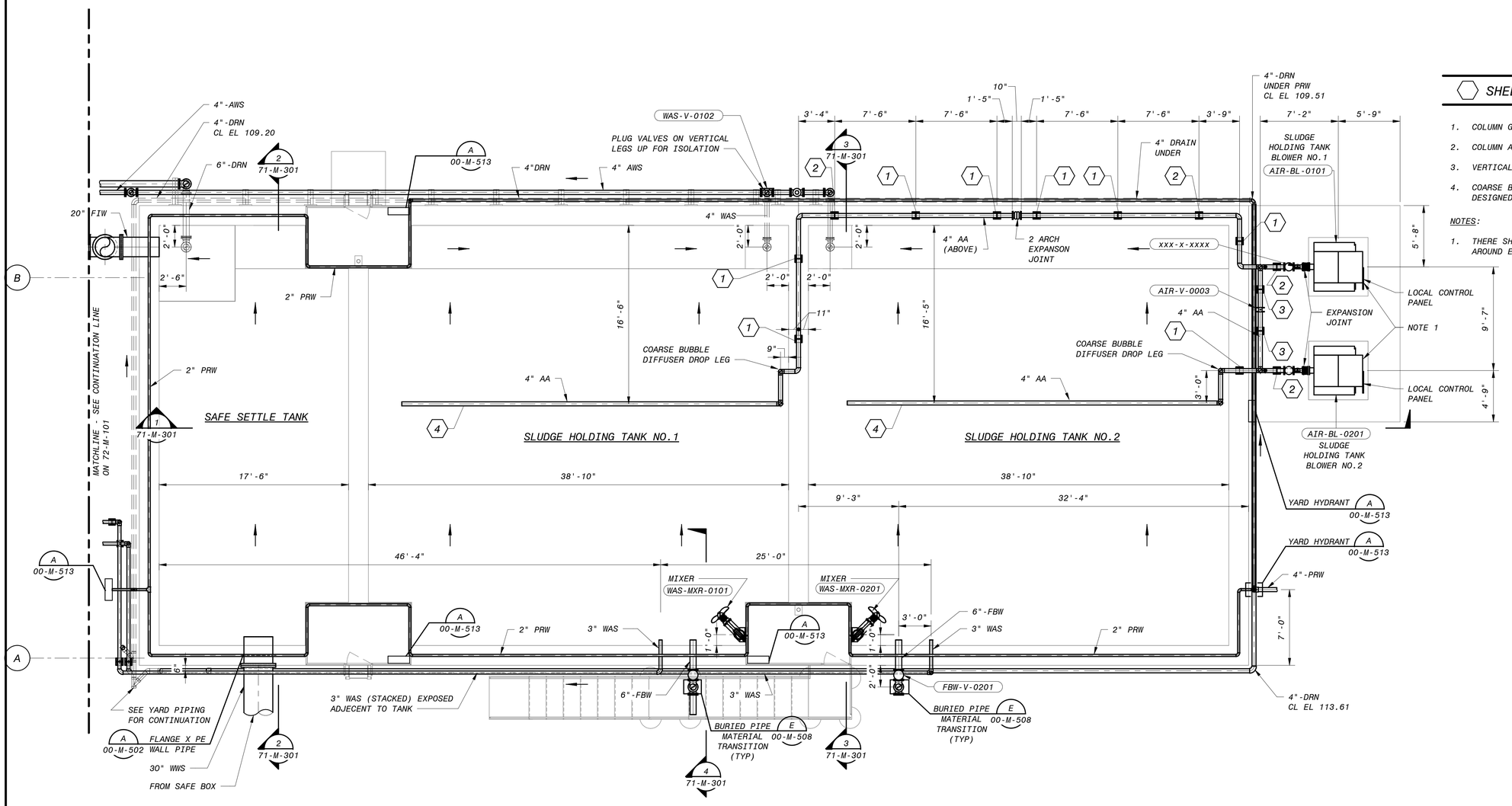

OPERATING FLOOR PLAN

3/16" = 1'-0"

SHEET KEYNOTES

1. COLUMN GUIDE SUPPORT. SEE DETAIL A ON 00-M-602
2. COLUMN AXIAL STOP SUPPORT. SEE DETAIL A/00-M-602
3. VERTICAL PIPE GUIDE SUPPORT. SEE DETAIL E/00-M-602
4. COARSE BUBBLE DIFFUSER HEADER AND SUPPORT TO BE DESIGNED BY COARSE BUBBLE DIFFUSER SUPPLIER.

NOTES:

1. THERE SHALL BE A MINIMUM OF 3'-6" OF CLEARANCE AROUND EACH CONTROL PANEL.

NO.	BY	CHK	APP	DATE	REVISIONS AND RECORD OF USE
0	KEZ	RWF	EVB	5/19/2020	ISSUED FOR CONSTRUCTION

REGISTERED PROFESSIONAL ENGINEER
KATHON ELIZABETH KEZ
C-83441
CIVIL
STATE OF CALIFORNIA
5/19/20

BLACK & VEATCH JOINT VENTURE
BLACK & VEATCH
FILANC

CITY OF MORRO BAY
MORRO BAY WATER
RECLAMATION FACILITY (WRF)

RESIDUALS AREA - SLUDGE HOLDING TANKS AND
SAFE SETTLE TANKS
CIVIL-MECHANICAL
OPERATING LEVEL PLAN

DESIGNED: KEZ
DETAILED: MAK
CHECKED: EVB
APPROVED: EVB
DATE: 5/19/2020

0 1/2 1
IF THIS BAR DOES NOT MEASURE 1" THEN DRAWING IS NOT TO FULL SCALE

PROJECT NO.
400530

71-M-101
SHEET
77 OF 412

6" 4' 2' 0' 5' 10'
3/16" = 1'-0"

PLOTTED: 5/19/2020 3:33:53 PM
D400530

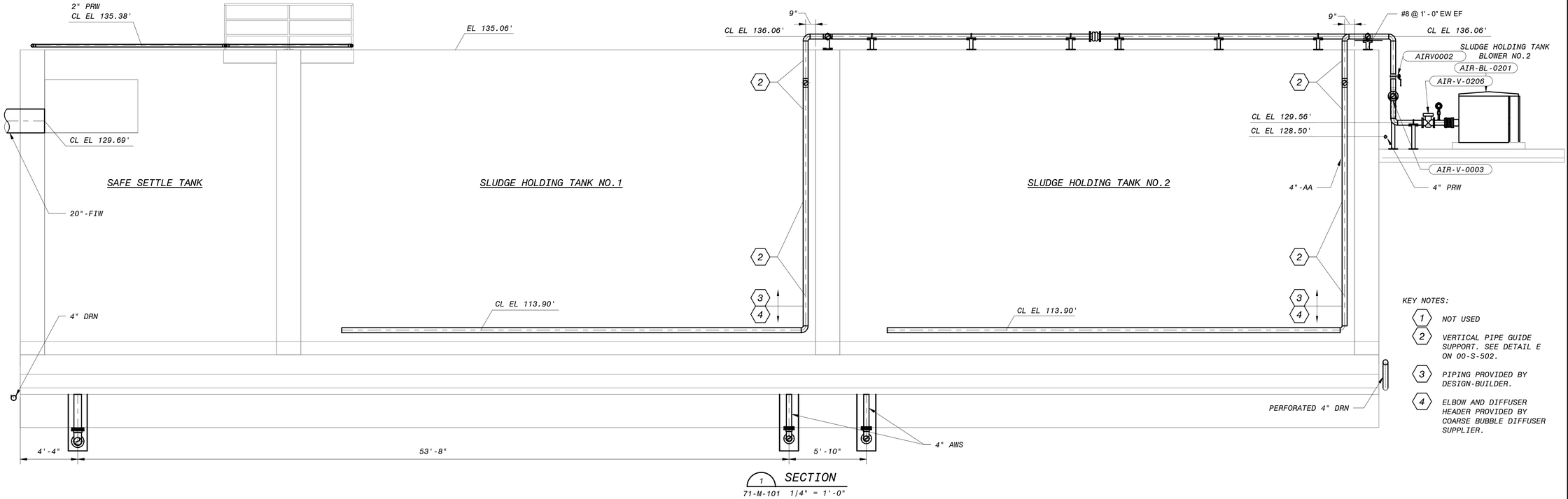

KEY NOTES:

1. NOT USED
2. VERTICAL PIPE GUIDE SUPPORT. SEE DETAIL E ON 00-S-502.
3. PIPING PROVIDED BY DESIGN-BUILDER.
4. ELBOW AND DIFFUSER HEADER PROVIDED BY COARSE BUBBLE DIFFUSER SUPPLIER.

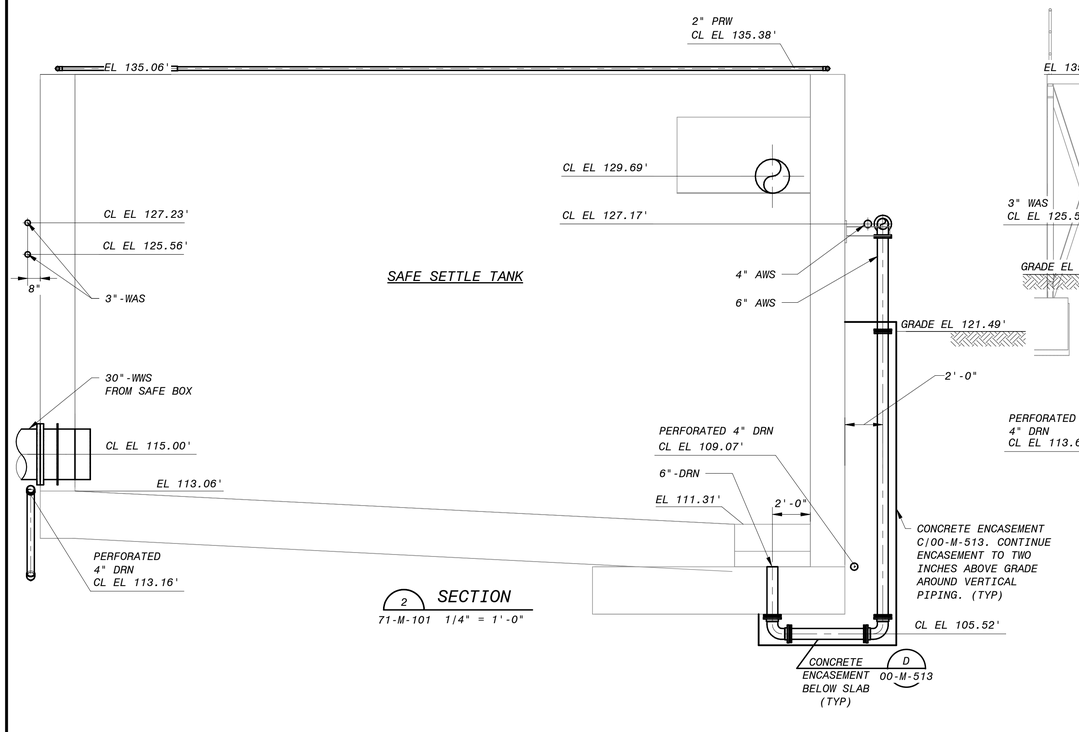

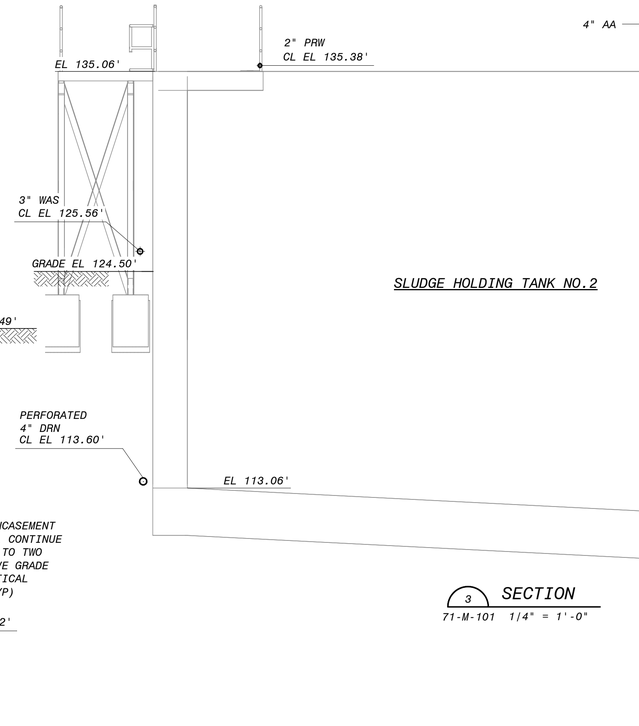

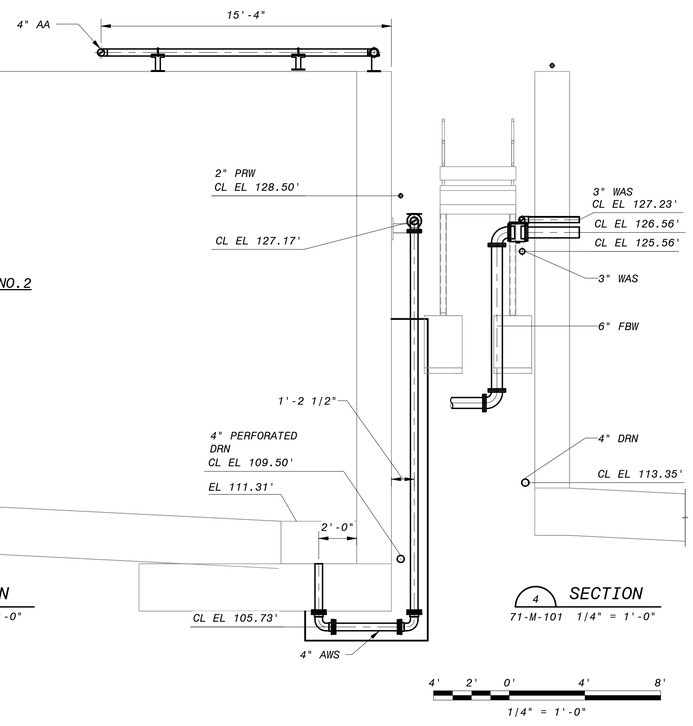

NO.	BY	CHK	APP	DATE	REVISIONS AND RECORD OF USE
0	KEZ	RWF	EVB	5/19/2020	ISSUED FOR CONSTRUCTION

REGISTERED PROFESSIONAL ENGINEER
KATHON ELIZABETH KEZ
C-83441
CIVIL
STATE OF CALIFORNIA
5/19/20

BLACK & VEATCH
JOINT VENTURE
BLACK & VEATCH
FILANC

CITY OF MORRO BAY
MORRO BAY WATER RECLAMATION FACILITY (WRF)
RESIDUALS AREA - SLUDGE HOLDING TANKS AND SAFE SETTLE TANKS
CIVIL-MECHANICAL
SECTIONS & DETAILS 1

DESIGNED: KEZ
DETAILED: MAK
CHECKED: EVB
APPROVED: EVB
DATE: 5/19/2020

0 1/2 1
IF THIS BAR DOES NOT MEASURE 1" THEN DRAWING IS NOT TO FULL SCALE

PROJECT NO.
400530

71-M-301
SHEET
78 OF 412

PLOTTED: 5/19/2020 3:33:58 PM
D400530

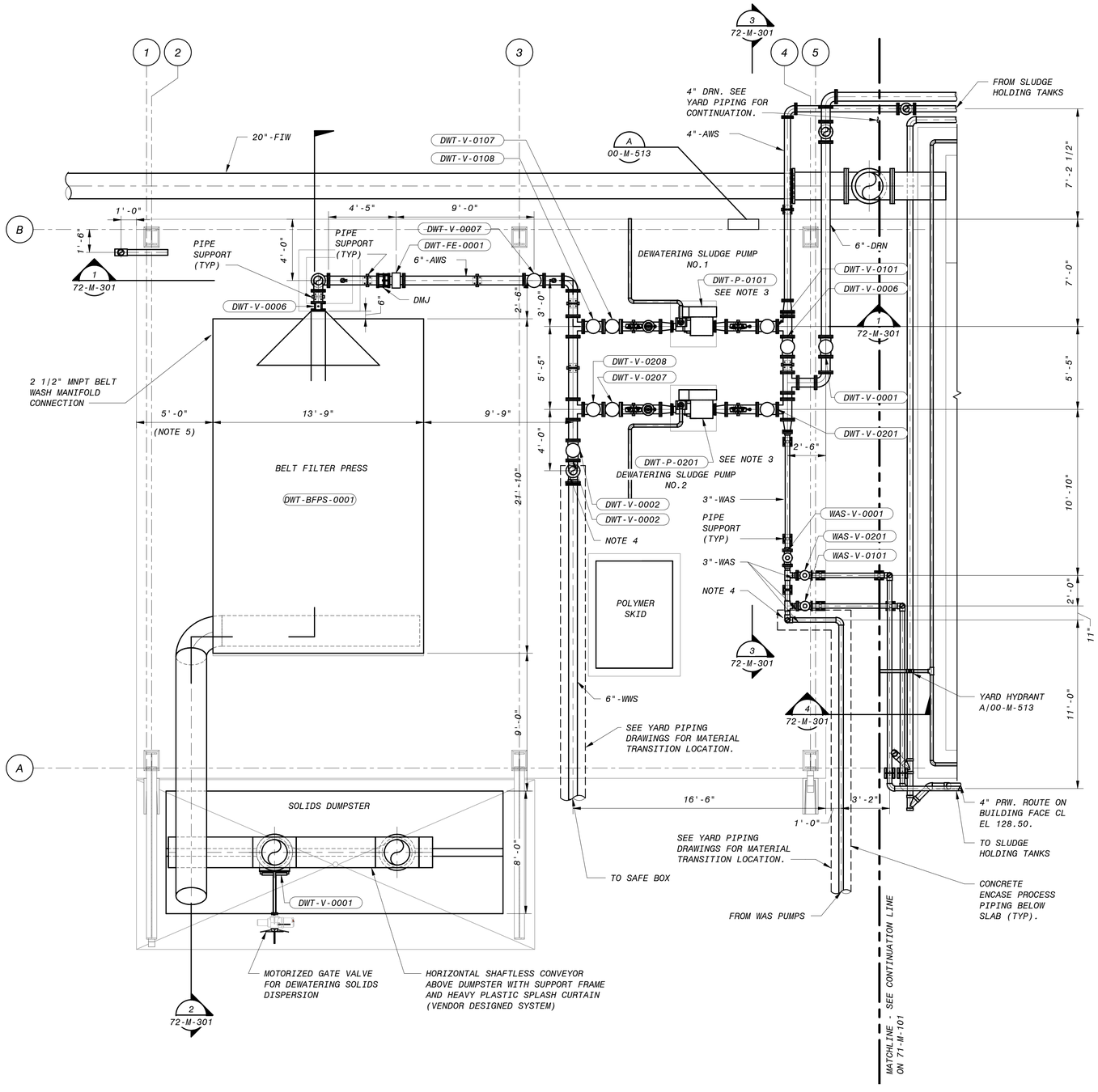

OPERATING FLOOR PLAN

1/4" = 1'-0"

4' 2' 0' 4' 8'

1/4" = 1'-0"

NOTES:

1. EXACT LOCATION FOR THE FLOOR DRAIN CONNECTION AT THE BELT FILTER PRESS TO BE CONFIRMED.
2. SEAL WATER STATION AS REQUIRED.
3. EXACT DEWATERING PUMP LAYOUT TO BE CONFIRMED WITH VENDOR.
4. SLAB ON GRADE FLOOR PIPE FOR METALLIC PIPING. PROVIDE INSULATING FLANGE ABOVE SLAB. B|M-00-509.
5. THERE SHALL BE A MINIMUM OF 5'-0" CLEAR SPACE FROM THE EDGE OF CONCRETE ON THE SOUTH AND WEST SIDES OF THE BELT FILTER PRESS. TO BE FINALIZED WITH BELT FILTER PRESS SHOP DRAWINGS.
6. NOTE THAT THE BELT FILTER PRESS FILTRATE DRAINS TO THE SANITARY SEWER. THE BELT FILTER PRESS SHOULD NOT BE OPERATED IF ANY OF THE FOLLOWING ACTIVITIES ARE ALSO OCCURRING:
   - CALCITE BACKWASH TANK IS DRAINING.
   - STORM WATER OUTLET CONTROL STRUCTURE IS PUMPING FLOW TO THE SEWER.
   - IF MORE THAN THREE AREAS WITH SEWER DRAINS ARE BEING HOSED DOWN AT ONCE.

NO.	BY	CHK	APP	DATE	REVISIONS AND RECORD OF USE
0	KEZ	RWF	EVB	5/19/2020	ISSUED FOR CONSTRUCTION

REGISTERED PROFESSIONAL ENGINEER
KATHRYN ELIZABETH ZUSY
C-83441
CIVIL
STATE OF CALIFORNIA
5/19/20

BLACK & VEATCH
JOINT VENTURE
BLACK & VEATCH
FILANC

CITY OF MORRO BAY
MORRO BAY WATER RECLAMATION FACILITY (WRF)

RESIDUALS AREA - DEWATERING FACILITY
CIVIL-MECHANICAL
PLAN

DESIGNED: KEZ
DETAILED: MAK
CHECKED: EVB
APPROVED: EVB
DATE: 5/19/2020

0 1/2 1
IF THIS BAR DOES NOT MEASURE 1" THEN DRAWING IS NOT TO FULL SCALE

PROJECT NO.
400530

72-M-101
SHEET
79 OF 412

PLOTTED: 5/19/2020 3:34:02 PM
D400530

NOTES:

1. FLOOR DRAIN LOCATIONS ARE SHOWN ON THE PLUMBING DRAWING 72-P-101.
2. SEAL WATER STATION AS REQUIRED.
3. EXACT DEWATERING PUMP LAYOUT TO BE CONFIRMED WITH VENDOR.

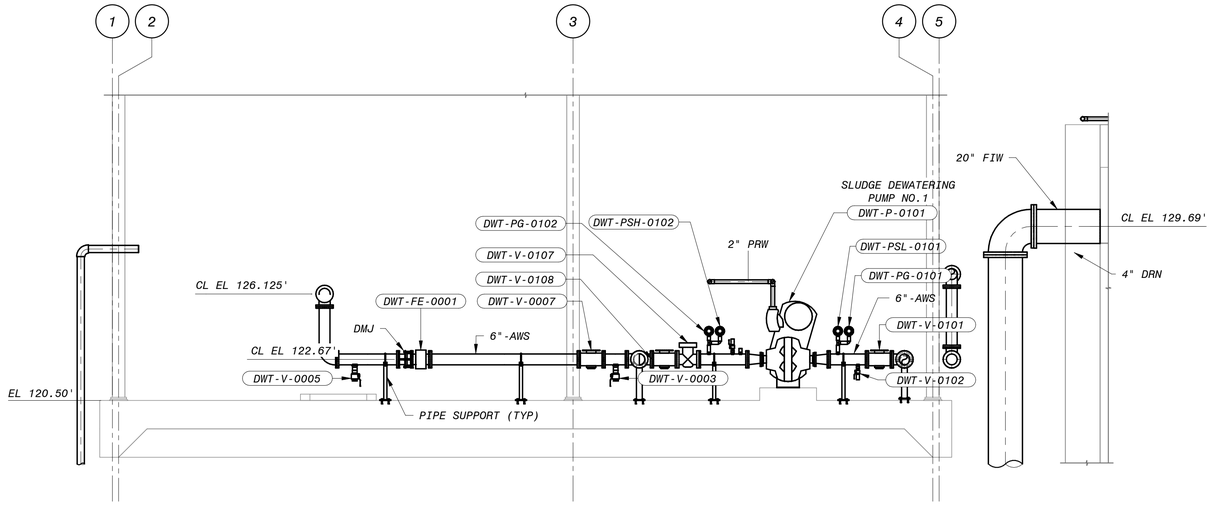

1 SECTION
72-M-101 1/4" = 1'-0"

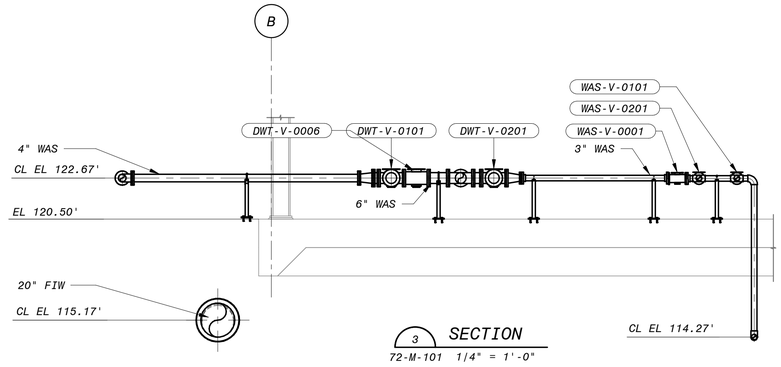

3 SECTION
72-M-101 1/4" = 1'-0"

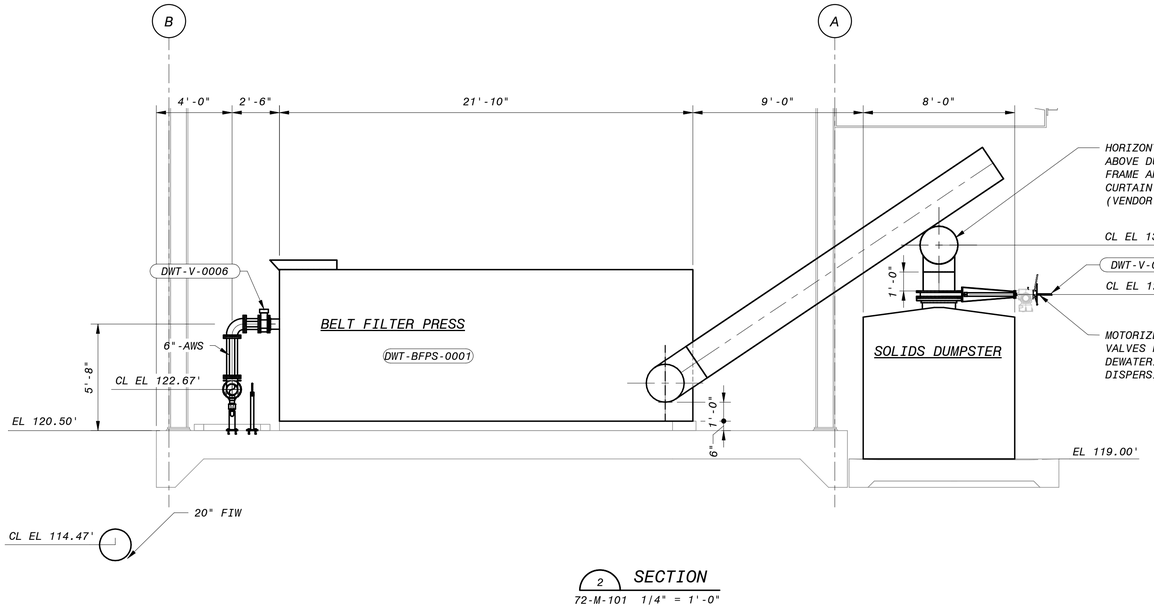

2 SECTION
72-M-101 1/4" = 1'-0"

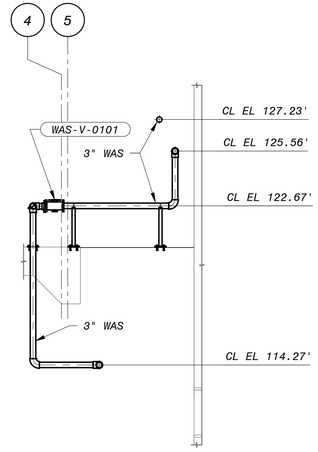

4 SECTION
72-M-101 1/4" = 1'-0"

4' 2' 0' 4' 8'
1/4" = 1'-0"

NO.	BY	CHK	APP'D
0	KEZ	RWF	EVB

REVISIONS AND RECORD OF USE

5/19/2020 ISSUED FOR CONSTRUCTION

DATE

REGISTERED PROFESSIONAL ENGINEER
KATHRYN ELIZABETH MUSY
C-83441
CIVIL
STATE OF CALIFORNIA
5/19/20

BLACK & VEATCH
JOINT VENTURE
BLACK & VEATCH
FILANC

CITY OF MORRO BAY
MORRO BAY WATER RECLAMATION FACILITY (WRF)

RESIDUALS AREA - DEWATERING FACILITY
CIVIL-MECHANICAL
SECTIONS & DETAILS 1

DESIGNED: KEZ
DETAILED: MAK
CHECKED: EVB
APPROVED: EVB
DATE: 5/19/2020

0 1/2 1
IF THIS BAR DOES NOT MEASURE 1" THEN DRAWING IS NOT TO FULL SCALE

PROJECT NO.
400530

72-M-301
SHEET
80 OF 412

PLOTTED: 5/19/2020 3:34:07 PM
D400530

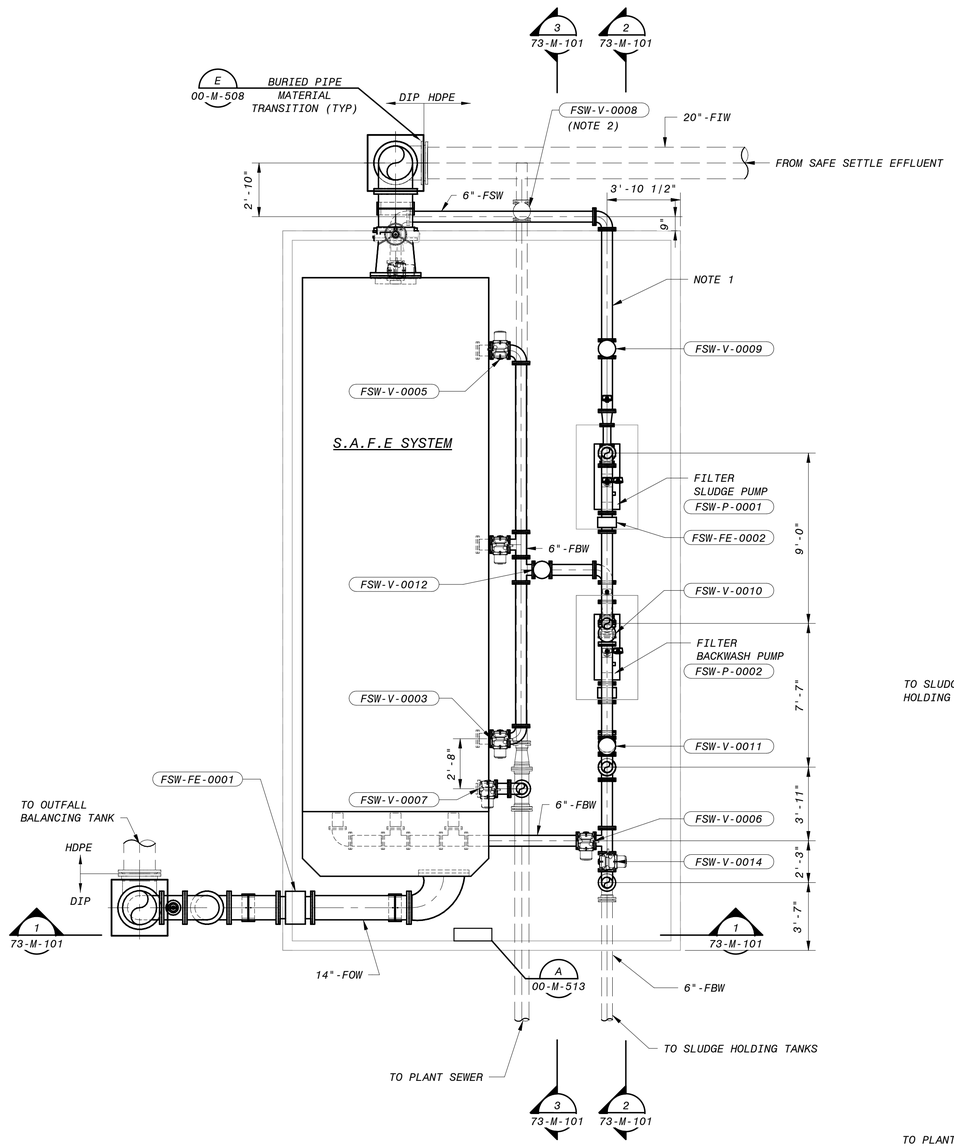

OPERATING FLOOR PLAN

1/4" = 1'-0"

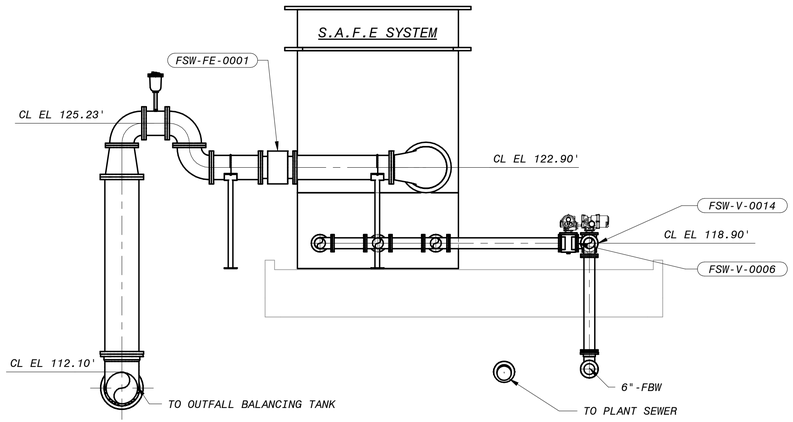

1 SECTION
73-M-101 1/4" = 1'-0"

NOTES:

1. SAFE SYSTEM ABOVE GROUND PIPING LAYOUT TO BE FINALIZED WHEN EQUIPMENT IS PURCHASED.
2. VALVE BOX SHALL BE PER COUNTY STANDARD DETAIL W-3, WITH COVER MARKED "DRAIN" AND WITHOUT VALVE CONCRETE ANCHOR BLOCK.

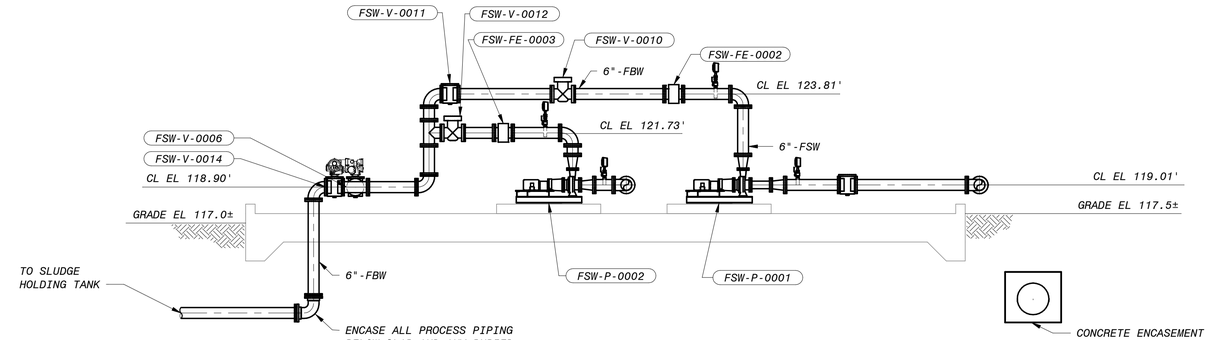

2 SECTION
73-M-101 1/4" = 1'-0"

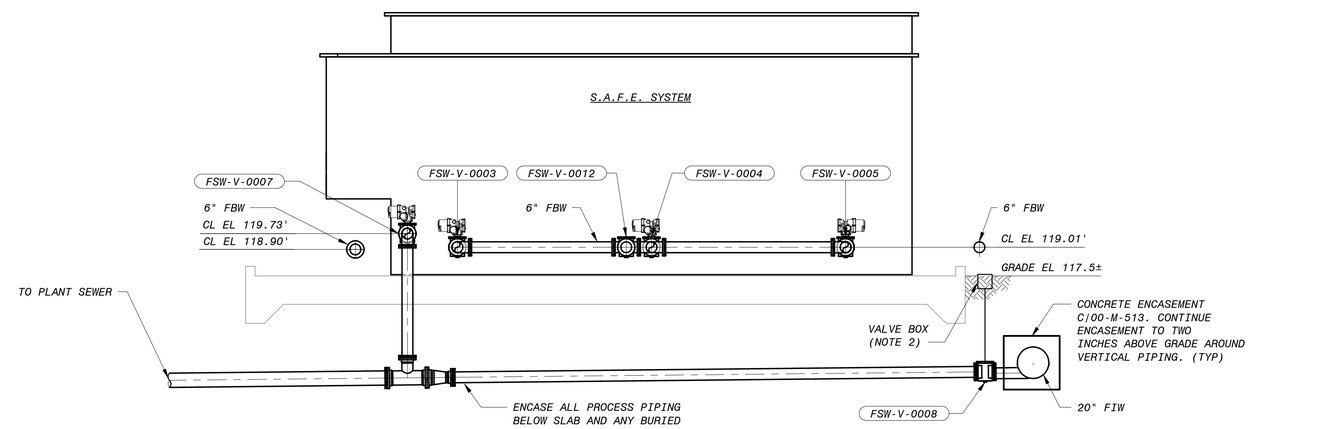

3 SECTION
73-M-101 1/4" = 1'-0"

4' 2' 0' 4' 8'
1/4" = 1'-0"

NO.	BY	CHK	APP	DATE	REVISIONS AND RECORD OF USE
0	KEZ	RWF	EVB	5/19/2020	ISSUED FOR CONSTRUCTION

REGISTERED PROFESSIONAL ENGINEER
KATHRYN ELIZABETH KUSY
C-83441
CIVIL
STATE OF CALIFORNIA
5/19/20

BLACK & VEATCH
JOINT VENTURE
BLACK & VEATCH
FILANC

CITY OF MORRO BAY
MORRO BAY WATER RECLAMATION FACILITY (WRF)

RESIDUALS AREA - SAFE FILTER SYSTEM
CIVIL-MECHANICAL
PLAN, SECTIONS AND DETAILS

DESIGNED: KEZ
DETAILED: MAK
CHECKED: EVB
APPROVED: EVB
DATE: 5/19/2020

0 1/2 1
IF THIS BAR DOES NOT MEASURE 1" THEN DRAWING IS NOT TO FULL SCALE

PROJECT NO.
400530

73-M-101
SHEET
81 OF 412

PLOTTED: 5/19/2020 3:34:15 PM
D400530

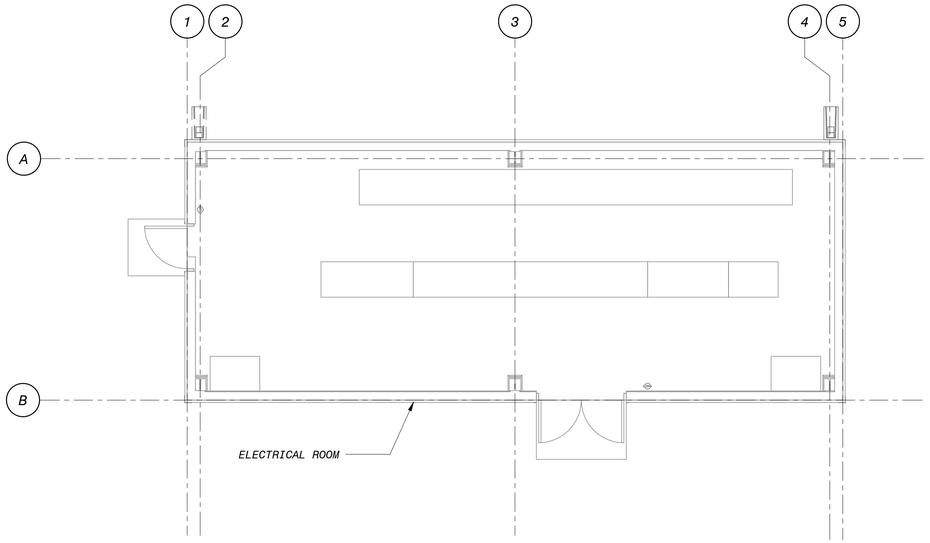

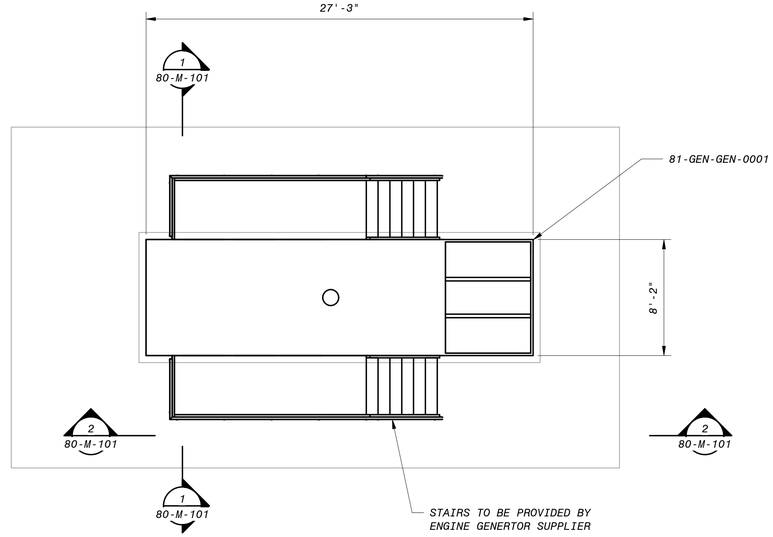

OPERATING LEVEL

3/16" = 1'-0"

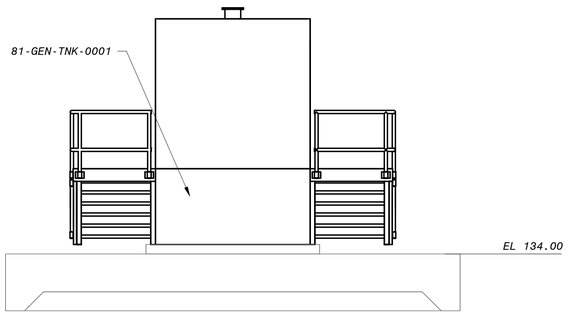

1 SECTION
80-M-101 1/4" = 1'-0"

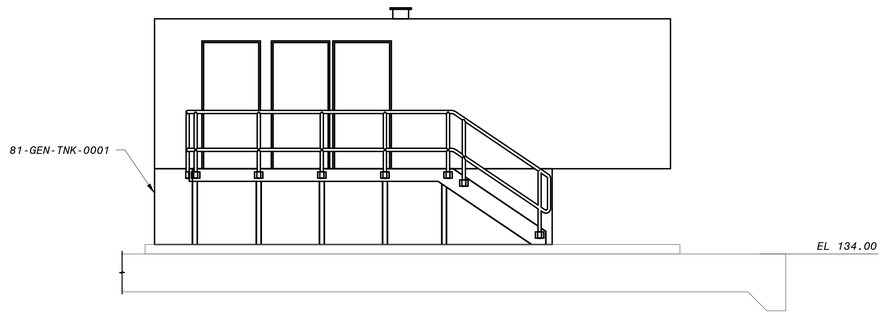

2 SECTION
80-M-101 1/4" = 1'-0"

NO.	BY	CHK	APP
0	KEZ	RWF	EVB

REVISIONS AND RECORD OF USE

ISSUED FOR CONSTRUCTION

5/19/2020 DATE

REGISTERED PROFESSIONAL ENGINEER
ERICK V. BEVINGTON
No. C 78836
CIVIL
STATE OF CALIFORNIA
5/20/2020

BLACK & VEATCH JOINT VENTURE
BLACK & VEATCH
FILANC

CITY OF MORRO BAY
MORRO BAY WATER RECLAMATION FACILITY (WRF)

ELECTRICAL BUILDING
CIVIL-MECHANICAL
OVERALL PLAN AND SECTIONS

DESIGNED: KEZ
DETAILED: MAK
CHECKED: EVB
APPROVED: EVB
DATE: 5/19/2020

4' 2' 0' 4' 8'
1/4" = 1'-0"

6" 4' 2' 0' 5' 10'
3/16" = 1'-0"

0 1/2 1
IF THIS BAR DOES NOT MEASURE 1" THEN DRAWING IS NOT TO FULL SCALE

PROJECT NO.
400530

80-M-101
SHEET
82 OF 412

PLOTTED: 5/19/2020 3:24:31 PM
D400530

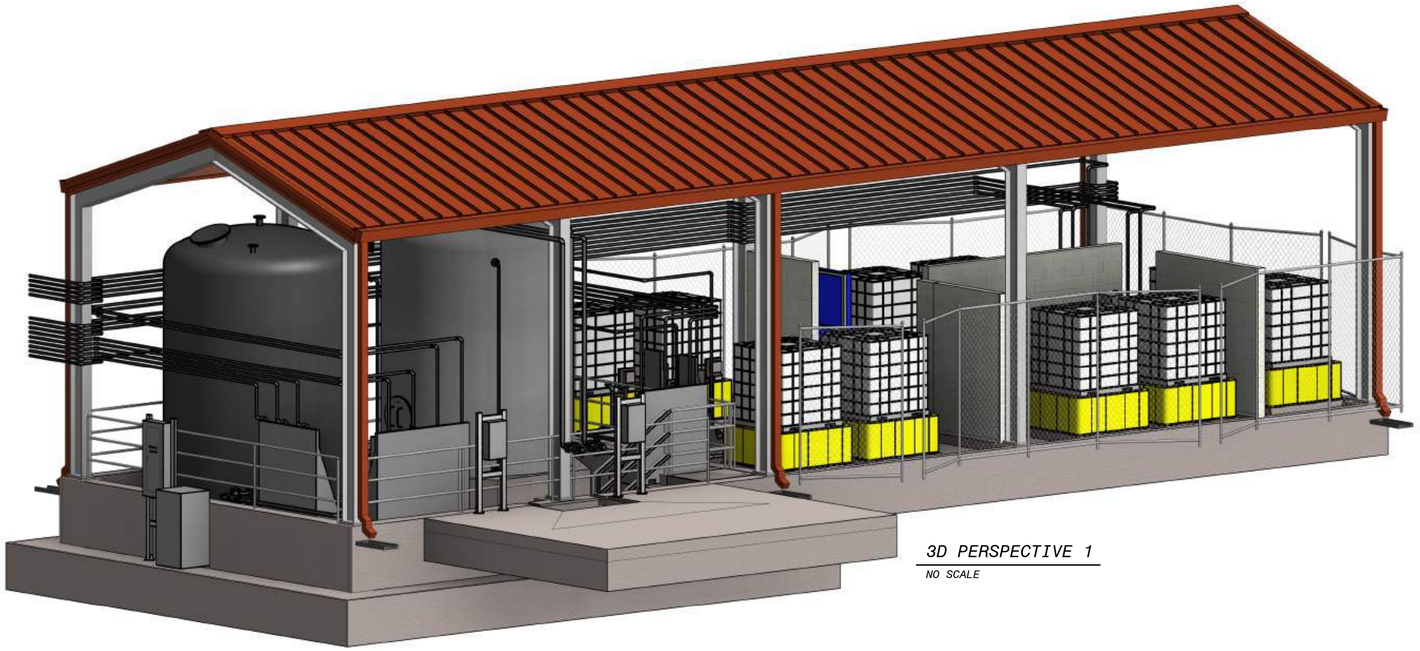

3D PERSPECTIVE 1

NO SCALE

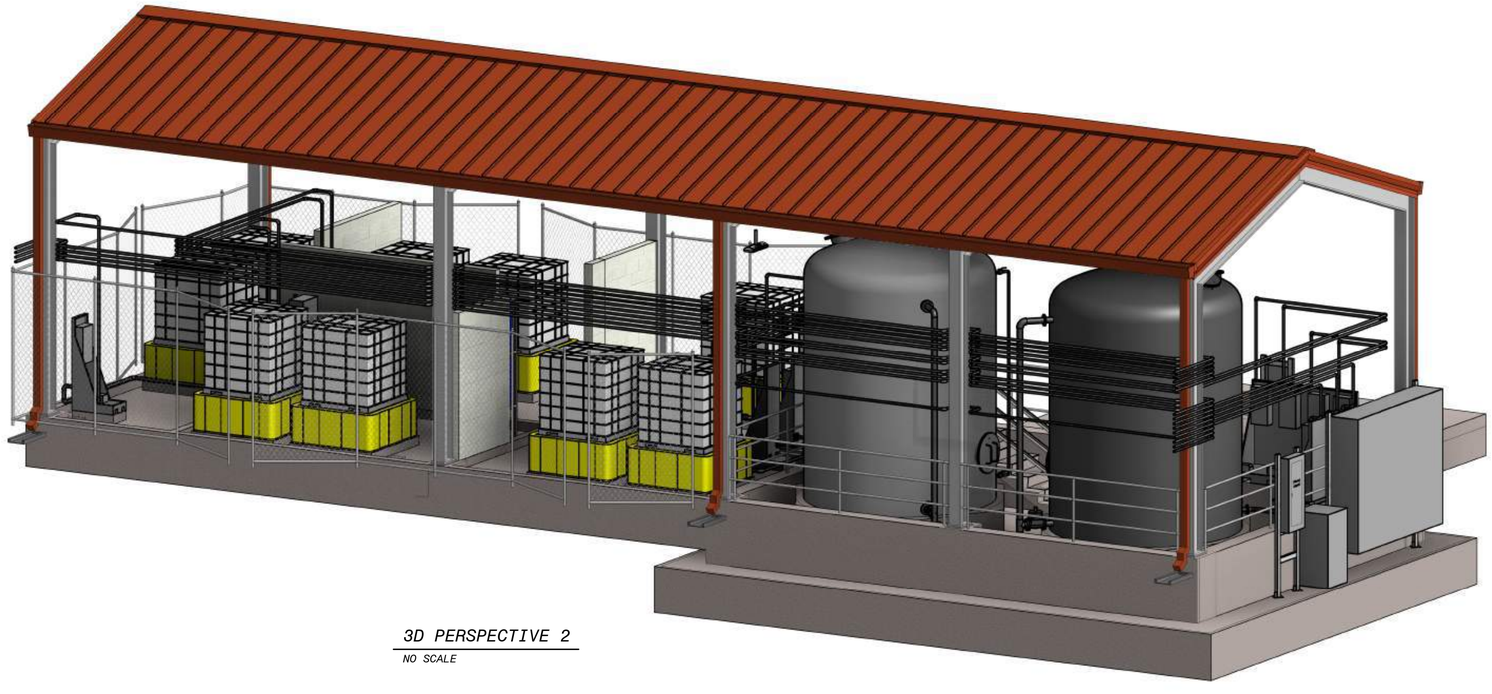

3D PERSPECTIVE 2

NO SCALE

NO.	BY	CHK	APP	DATE	REVISIONS AND RECORD OF USE
0	DAV	RWF	EVB	5/19/2020	ISSUED FOR CONSTRUCTION

REGISTERED PROFESSIONAL ENGINEER
ERICK V. BEVINGTON
No. C 78836
CIVIL
STATE OF CALIFORNIA
5/20/2020

BLACK & VEATCH

JOINT VENTURE

BLACK & VEATCH

FILANC

CITY OF MORRO BAY
MORRO BAY WATER
RECLAMATION FACILITY (WRF)

CHEMICAL FACILITY - OVERALL
CIVIL-MECHANICAL
3D VIEWS

DESIGNED: DAV
DETAILED: MAK
CHECKED: EVB
APPROVED: EVB
DATE: 5/19/2020

0 1/2 1

IF THIS BAR DOES NOT MEASURE 1" THEN DRAWING IS NOT TO FULL SCALE

PROJECT NO.
400530

90-M-001

SHEET
83 OF 412

PLOTTED: 5/19/2020 3:27:45 PM
D400530

NOTES:

1. AREA TO BE COATED PER THE REQUIREMENTS OF SPECIFICATION 099724.
2. SEE SPECIFICATIONS 323113 "CHAIN-LINK FENCES AND GATES" FOR INSTALLATION DETAILS.
3. ABOVE GRADE SODIUM BISULFITE PIPING SHALL BE INSULATED AND HEAT TRACED.

1 2 3 4 5

24' - 3" | 17' - 3" | 14' - 3" | 14' - 3"

A B

CHEMICAL TOTE (TYP OF 4)

CHEMICAL CONTAINMENT BASIN WITH INTERGRAL SCALE (TYP OF 4)

SCREEN FENCING AROUND TOTE AREA, NOTE 2

TO PRODUCT WATER TANK

TRUCK UNLOADING AREA

2 90-M-301

NOTE 1

TO ONSITE RECYCLED WATER PUMPS

TO MBR BACKWASH/CIP

TO UVAOP SYSYTEM

DISINFECTION OF RO PRODUCT WATER

NOCL-P-0401

NOCL-P-0501

NOCL-P-0701

NOCL-P-0601

NOCL-P-0301

NOCL-P-0201

NOCL-P-0101

TO OCEAN OUTFALL PIPING

TO RO CONCENTRATE WATER PIPING

TO RO FEED PIPING

1 90-M-301

CITRIC ACID AREA

SODIUM BISULFITE AREA

SODIUM HYDROXIDE TO FINE SCREEN EFFLUENT

TO RO CIP/NEUTRALIZATION TANK

NAOH-P-0301

NAOH-P-0201

NAOH-P-0101

NOTE 3

SEPARATION WALL BETWEEN NON-CHEMICAL STORAGE TOTES, REFER TO STRUCTURAL DRAWINGS FOR DETAILS

NOTE 1

EMERGENCY EYEWASH STATION (TYP OF 7)

SULFURIC ACID DILUTION PANEL

SODIUM HYDROXIDE TANK

NAOH-T-0001

SODIUM HYPOCHLORITE TANK

NOCL-T-0001

7' - 5"

LIQUID AMMONIA SULFATE AREA

SULFURIC ACID AREA

ANTISCALANT AREA

23' - 10"

1 90-M-301

CHEMICAL PIPING ROUTED TO CHEMICAL DUCT BOX. FOR CONTINUATION, REFER TO YARD PIPING DRAWINGS.

15' - 0" | 6' - 9"

14' - 3" | 14' - 3"

2 90-M-301

CHEMICAL PIPING ROUTED TO CHEMICAL DUCT BOX. FOR CONTINUATION, REFER TO YARD PIPING DRAWINGS.

12" 0' 1' 2' 3' 4' 5' 6' 7'

3/8" = 1'-0"

CHEMICAL FACILITY - OVERALL - PLAN

3/8" = 1'-0"

NO.	BY	CHK	APP	DATE	REVISIONS AND RECORD OF USE
0	DAV	RWF	EVB	5/19/2020	ISSUED FOR CONSTRUCTION

REGISTERED PROFESSIONAL ENGINEER
ERICK V. BEVINGTON
No. C 78836
CIVIL
STATE OF CALIFORNIA
5/20/2020

BLACK & VEATCH JOINT VENTURE
BLACK & VEATCH
FILANC

CITY OF MORRO BAY
MORRO BAY WATER RECLAMATION FACILITY (WRF)

CHEMICAL FACILITY - OVERALL CIVIL-MECHANICAL PLAN

DESIGNED: DAV
DETAILED: MAK
CHECKED: EVB
APPROVED: EVB
DATE: 5/19/2020

0 1/2 1
IF THIS BAR DOES NOT MEASURE 1" THEN DRAWING IS NOT TO FULL SCALE

PROJECT NO. 400530

90-M-101
SHEET 84 OF 412

PLOTTED: 5/19/2020 3:28:58 PM
D400530

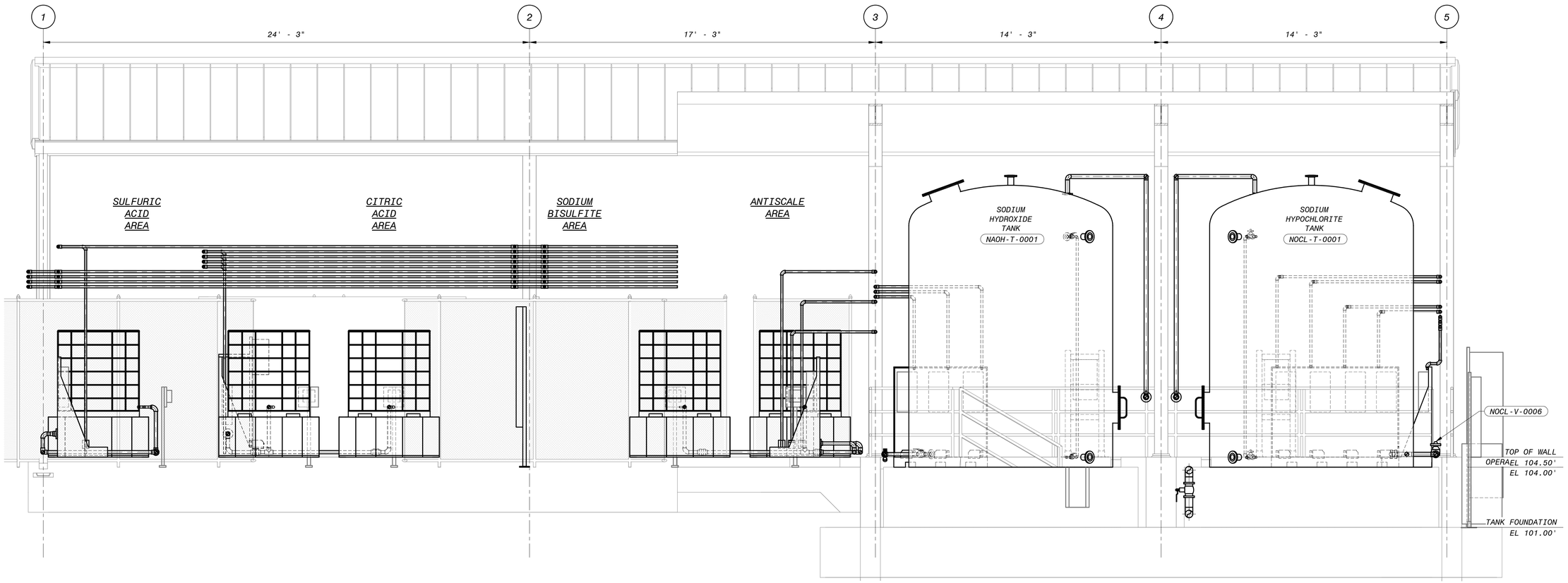

1 SECTION
90-M-101 3/8" = 1'-0"

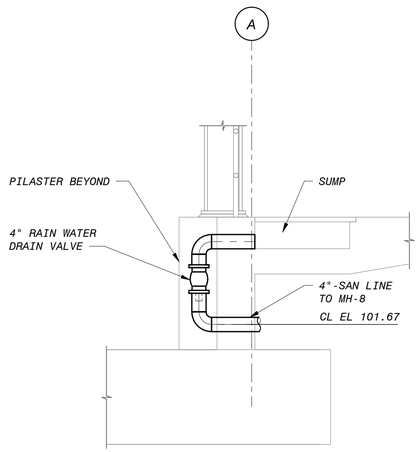

2 SECTION
90-M-101 1/2" = 1'-0"

12" 0' 1' 2' 3' 4' 5' 6' 7'
3/8" = 1'-0"

NO.	BY	CHK	APP
0	DAV	RWF	EVB

REVISIONS AND RECORD OF USE

ISSUED FOR CONSTRUCTION 5/19/2020

DATE

REGISTERED PROFESSIONAL ENGINEER
ERICK V. BEVINGTON
No. C 78836
CIVIL
STATE OF CALIFORNIA
5/20/2020

BLACK & VEATCH JOINT VENTURE
BLACK & VEATCH
FILANC

CITY OF MORRO BAY
MORRO BAY WATER RECLAMATION FACILITY (WRF)

CHEMICAL FACILITY - OVERALL
CIVIL-MECHANICAL
SECTION AND DETAILS 1

DESIGNED: DAV
DETAILED: MAK
CHECKED: EVB
APPROVED: EVB
DATE: 5/19/2020

0 1/2 1
IF THIS BAR DOES NOT MEASURE 1" THEN DRAWING IS NOT TO FULL SCALE

PROJECT NO.
400530

90-M-301
SHEET
85 OF 412

PLOTTED: 5/19/2020 3:29:44 PM
D400530

EQUIPMENT IDENTIFICATION DESCRIPTION



PIPELINE IDENTIFICATION DESCRIPTION

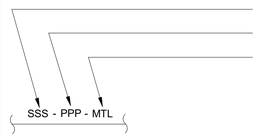

LINE SYMBOLS

- MAJOR PROCESS PIPING OR FLOW CHANNEL
- SECONDARY PROCESS PIPING
- MISCELLANEOUS PIPING
- SCREENED LINE DENOTES EXISTING PIPE OR EQUIPMENT
- DASHED LINE DENOTES FUTURE PIPE AND EQUIPMENT
- ELECTRIC SIGNAL
- HYDRAULIC SIGNAL
- PNEUMATIC SIGNAL
- SIGNAL CONNECTION POINT
- CONTROL SYSTEM BACKBONE NETWORK SIGNAL (ETHERNET)
- FIELD DEVICE NETWORK SIGNAL (ETHERNET)
- NON-STANDARD OR INDEPENDENT CONTROL SYSTEM NETWORK SIGNAL (AS NOTED ON DRAWINGS)

- B | I-XX — SIGNAL LINE GOING TO ANOTHER SHEET
- B | I-XX — SIGNAL LINE FROM ANOTHER SHEET (MATCH LETTERS)
- B | I-XX — PROCESS LINE COMING/GOING TO/FROM ANOTHER SHEET
  - MATCH SHEET NO. IDENTIFIER
  - MATCH LINE NO.
- B — SIGNAL CONNECTION WITHIN THE SAME SHEET
- FLOW ARROW FOR PROCESS PIPING
- PROCESS LINES CROSSING (NOT CONNECTED)

PRIMARY ELEMENT & FITTING SYMBOLS

- DIAPHRAGM SEAL
- PRIMARY FLOW ELEMENT: ORIFICE PLATE
- PRIMARY FLOW ELEMENT: FLUME
- PRIMARY FLOW ELEMENT: TURBINE OR PROPELLER-TYPE
- M — PRIMARY FLOW ELEMENT: ELECTROMAGNETIC
- ΔT — THERMAL DISPERSION OR THERMAL MASS TYPE FLOW ELEMENT
- PRIMARY FLOW ELEMENT: TRANSIT-TIME ULTRASONIC
- FLOW CONDITIONER
- LE / CON — CONDUCTANCE TYPE LEVEL SENSOR
- LE / RAD — RADAR TYPE LEVEL SENSOR
- LE / GWR — GUIDED WAVE RADAR TYPE LEVEL SENSOR
- ANNULAR TYPE DIAPHRAGM SEAL
- PRIMARY FLOW ELEMENT: POSITIVE DISPLACEMENT
- PRIMARY FLOW ELEMENT: VENTURI TUBE, FLOW NOZZLE, OR FLOW TUBE. * SEE MEASUREMENT SYMBOL NOTATIONS LIST
- PRIMARY FLOW ELEMENT: WEIR
- PRIMARY FLOW ELEMENT: PITOT TUBE
- PRIMARY FLOW ELEMENT: CORIOLIS
- HORN OR SIREN
- FG — ROTAMETER
- LE / US — ULTRASONIC TYPE LEVEL SENSOR
- LE / DP — PRESSURE SENSING LEVEL SENSOR
- PILOT LIGHT
- REDUCER - CONCENTRIC
- REDUCER - ECCENTRIC
- FLANGE
- D — DRAIN - BELL-UP
- D — DRAIN - FUNNEL
- FLEXIBLE CONNECTION
- CAP
- PLUG
- T — TRAP
- FLAME CHECK
- SURGE CHAMBER
- FLAME ARRESTER
- SEDIMENT TRAP
- P — INSTRUMENT PURGE OR FLUSHING DEVICE
- UNION
- HOSE CONNECTION
- STRAINER - Y TYPE
- STRAINER - BASKET
- Q — QUICK CONNECT
- VENT
- VENT - SCREENED
- COUPLING
- LG — SIGHTGLASS
- FI — VISUAL FLOW INDICATOR
- MOISTURE SEPARATOR
- EXPANSION LOOP
- SUCTION DIFFUSER
- THERMOWELL

CHEMICAL FEED EQUIPMENT SYMBOLS

- DIFFUSER: TANK
- DIFFUSER: CHANNEL
- INJECTOR
- RUPTURE DISK
- PULSATION DAMPNER
- CHLORINE CYLINDER
- VAPOR SUPERHEATER
- PRESSURE BUILDING COIL
- SPECTACLE, BLIND, CLOSED
- SPECTACLE, BLIND, OPEN
- CALIBRATION COLUMN
- EXPANSION TANK OR FUNNEL
- WEIGH SCALE
- DRIP LEG HEATER
- TOTE
- AS — AUTOMATIC SWITCHOVER
- PASTE TYPE LIME SLAKER
- EDUCTOR
- GAS FEEDER
- EVAPORATOR
- DRY CHEMICAL FEEDER
- TON — TON CONTAINER
- POLYMER BLENDER FEEDER
- S — POLYMER BLENDER FEEDER
- POLYMER INJECTION RING
- DIFFUSER
- DIFFUSER - PLAN
- CO2 VAPORIZOR
- COMBINATION SHOWER/ EYEWASH FOUNTAIN
- EYEWASH FOUNTAIN
- SHOWER
- DOUBLE CONTAINMENT PIPE

MECHANICAL EQUIPMENT SYMBOLS

- VAPORIZER: AMBIENT
- PARTICULATE FILTER
- ROTARY SCROLL COMPRESSOR
- AIR FILTER
- WATER FILTER: CARTRIDGE TYPE
- WATER FILTER: MEMBRANE TYPE
- MIXER
- COMPRESSOR
- VALVE: MATERIAL HANDLING ROTARY
- AIR REGULATOR
- STATIC MIXER
- HEAT EXCHANGER: TYPE 1
- HEAT EXCHANGER: TYPE 2
- HEAT EXCHANGER: FINNED TUBE
- HEAT EXCHANGER: SHELL & TUBE
- HEAT EXCHANGER: PLATE & FRAME
- HEAT EXCHANGER: SPIRAL
- HEAT EXCHANGER: DOUBLE PIPE
- HEAT EXCHANGER: AIR
- BOILER
- AFTERCOOLER
- FILTER SEPARATOR
- S — SILENCER
- HYDROCYCLONE

PUMP & BLOWER SYMBOLS

- CENTRIFUGAL PUMP OR OTHER TYPE NOT SPECIFIED
- SUBMERGED CENTRIFUGAL PUMP
- SCREW (LIFT) PUMP
- ROTARY PUMP
- PROGRESSING CAVITY PUMP
- POSITIVE DISPLACEMENT PUMP
- PLUNGER PUMP
- VERTICAL PUMP
- SUMP PUMP
- CENTRIFUGAL FAN
- CENTRIFUGAL BLOWER
- POSITIVE DISPLACEMENT BLOWER
- COMPRESSOR: RECIPROCATING
- COMPRESSOR: ROTARY SCREW
- COMPRESSOR: LIQUID RING
- MOTOR DRIVEN DIAPHRAGM METERING PUMP
- S — SOLENOID PUMP
- PERISTALTIC PUMP
- DRUM PUMP
- DOUBLE DIAPHRAGM PUMP
- ELECTRIC MOTOR
- AG (ABOVE GROUND)
- BG (BELOW GROUND)

VALVE & GATE SYMBOLS

- GATE: SLUICE OR SLIDE
- VALVE: GATE OR OTHER TWO-WAY TYPE NOT OTHERWISE IDENTIFIED
- VALVE: BALL
- VALVE: GLOBE
- VALVE: BUTTERFLY
- VALVE: ECCENTRIC PLUG
- VALVE: NON-ECCENTRIC PLUG
- VALVE: THREE WAY
- VALVE: FOUR WAY
- VALVE: CHECK
- VALVE: DIAPHRAGM
- VALVE: VPORT BALL
- VALVE: MUD
- VALVE: THERMAL SHUTOFF
- VALVE: NEEDLE
- VALVE: SLEEVE
- GATE: FLAP
- VALVE: VENTED BALL
- VALVE: DIVERTER
- 1/2" THREADED TAP WITH A 1/2" THREADED PLUG
- VALVE: PRESSURE REDUCING
- VALVE: PRESSURE SUSTAINING
- VALVE: PRESSURE REDUCING (SELF ACTUATING TYPE)
- VALVE: PRESSURE SUSTAINING (SELF ACTUATING TYPE)
- P — VALVE: PILOT ACTUATED RELIEF
- VALVE: VACUUM RELIEF
- VALVE: PRESSURE RELIEF
- VALVE: PRESSURE/VACUUM RELIEF
- VALVE: ANGLE
- VALVE: SET STOP
- VALVE: PINCH
- VALVE: STOP CHECK
- VALVE: TELESCOPING
- VALVE: COMBINATION AIR
- VALVE: AIR RELEASE
- VALVE: AIR VACUUM
- VALVE: CHLORINE WITH YOKE
- M — CHLORINE VACUUM REGULATOR
- VALVE: KNIFE GATE
- BACKFLOW PREVENTER
- VACUUM BREAKER
- EXPLOSION RELIEF
- VALVE: GENERIC ROTARY

VALVE AND GATE ACTUATOR SYMBOLS

- HANDWHEEL ACTUATOR
- S — SOLENOID
- S / R — SOLENOID - MANUAL RESET
- S / R / R — SOLENOID - REMOTE RESET
- PRESSURE BALANCED DIAPHRAGM
- M — INTELLIGENT ELECTRIC OR STANDARD ELECTRIC
- M / SM — SMALL MOTOR ACTUATOR
- I/P — CURRENT - TO-PNEUMATIC ACTUATOR
- E/H — ELECTRIC-HYDRAULIC
- SPRING-DIAPHRAGM ACTUATOR OR OTHERWISE UNSPECIFIED
- P — PNEUMATIC ACTUATOR
- P / DA — PNEUMATIC ACTUATOR DOUBLE ACTING
- P / SC — PNEUMATIC ACTUATOR SPRING CLOSE
- P / SO — PNEUMATIC ACTUATOR SPRING OPEN
- FLOAT OPERATED VALVE
- SPRING OR WEIGHT ACTUATED RELIEF OR SAFETY VALVE ACTUATOR LOADED VALVE
- QUICK OPENING VALVE
- QUICK CLOSING VALVE
- LOADING/BACK PRESSURE VALVE

WATER & WASTEWATER SYMBOLS

- OZONE GENERATOR WITH POWER SUPPLY
- OZONE GENERATOR
- GRIT CONCENTRATOR & DEWATERING SCREW
- BAR SCREEN: MECHANICAL
- GRIT COLLECTOR: VORTEX TYPE
- RECTANGULAR BASIN
- SOLIDS COLLECTOR
- SOLIDS COLLECTOR W/SETTLING PLATES
- RECTANGULAR SEDIMENTATION BASIN
- UV HORIZONTAL BULBS
- MANUAL BAR SCREEN
- GAS FLARE
- GRIT CLASSIFIER
- GRAVITY FILTER
- GRAVITY THICKENER
- CIRCULAR SEDIMENTATION BASIN
- DAF
- BELT FILTER PRESS
- GRAVITY BELT THICKENER
- CENTRIFUGE
- RECTANGULAR SEDIMENTATION BASIN WITH SETTLING PLATES
- GRIT BASIN
- SLUDGE GRINDER: INLINE
- SLUDGE GRINDER: CHANNEL MOUNTED
- GRIT CONCENTRATOR

MATERIAL HANDLING EQUIPMENT SYMBOLS

- CYCLONE SEPARATER
- DUMPSTER
- BIN: LIVE BOTTOM
- BIN: SLIDING FRAME
- SCREEN: SINGLE VIBRATORY
- SCREEN: DOUBLE VIBRATORY
- GRINDER
- BIN - CLOSED TOP
- BIN - OPEN TOP
- HORIZONTAL BAR SCREEN
- MIXER: PUGMILL
- MIXER: BLENDER
- CONVEYOR: BELT
- CONVEYOR: VIBRATORY
- H — PISTON CAKE PUMP: SINGLE
- H / H — PISTON CAKE PUMP: DOUBLE
- CONVEYOR: SCREW
- HOPPER
- DUST HOPPER

GENERAL NOTES

1. IN GENERAL, THE P&ID SYMBOLS AND DEVICE IDENTIFICATIONS ARE BASED ON INTERNATIONAL SOCIETY OF AUTOMATION, STANDARD PRACTICE ANSI/ISA-5.1 (2009). SOME MODIFICATIONS, ADDITIONS, AND ALTERATIONS HAVE BEEN MADE AS NEEDED TO ACCOMMODATE THE PROJECT REQUIREMENTS.
2. SOME CONTROL AND INTERLOCK REQUIREMENTS WHICH CAN BE MORE CLEARLY ILLUSTRATED ON SCHEMATIC DRAWINGS HAVE BEEN OMITTED FROM THE P&ID DRAWINGS.
3. THIS IS A GENERAL LEGEND SHEET. SOME SYMBOLS AND ABBREVIATIONS MAY NOT BE UTILIZED ON THIS SPECIFIC PROJECT.
4. PIPING AND EQUIPMENT LEGEND APPLIES TO P&ID SHEETS ONLY AND MAY DIFFER FROM LEGENDS FOR OTHER SHEETS.

NO.	BY	CHK	APP
0	BLB	JSM	BLB

REVISIONS AND RECORD OF USE

ISSUED FOR CONSTRUCTION — 5/19/2020 (DATE)

REGISTERED PROFESSIONAL ENGINEER — BRIAN L. BUTLER — No. E 16569 — ELECTRICAL — STATE OF CALIFORNIA

BLACK & VEATCH JOINT VENTURE — BLACK & VEATCH — FILANC

CITY OF MORRO BAY
MORRO BAY WATER RECLAMATION FACILITY (WRF)

LEGEND & ABBREVIATIONS
P&ID
SHEET 1

DESIGNED:	BLB
DETAILED:	PVR
CHECKED:	JSM, BDS
APPROVED:	BLB
DATE:	5/19/2020

0 1/2 1

IF THIS BAR DOES NOT MEASURE 1" THEN DRAWING IS NOT TO FULL SCALE

PROJECT NO. 400530

00-I-001

SHEET 86 OF 412

PLOTTED: 5/18/2020 3:58:21 PM

D400530

INSTRUMENT AND I/O ABBREVIATIONS
MEANINGS OF IDENTIFICATION LETTERS

LETTER	FIRST LETTER		SUCCEEDING LETTERS		
	MEASURED OR INITIATING VARIABLE	VARIABLE MODIFIER	READOUT OR PASSIVE FUNCTION	OUTPUT OR ACTIVE FUNCTION	FUNCTION MODIFIER
A	ANALYSIS		ALARM		
B	BURNER, COMBUSTION		USER'S CHOICE	USER'S CHOICE	USER'S CHOICE
C	USER'S CHOICE			CONTROL	CLOSE
D	USER'S CHOICE	DIFFERENTIAL			DEVIATION
E	VOLTAGE (EMF)		SENSOR, PRIMARY ELEMENT		
F	FLOW, FLOW RATE	RATIO (FRACTION)			
G	USER'S CHOICE		GLASS, GAUGE, VIEWING DEVICE		
H	HAND (MANUALLY INITIATED)				HIGH
I	CURRENT (ELECTRICAL)		INDICATE		
J	POWER		SCAN		
K	TIME OR TIME-SCHEDULE	TIME RATE OF CHANGE		CONTROL STATION	
L	LEVEL		LIGHT		LOW
M	USER'S CHOICE	MOMENTARY			MIDDLE OR INTERMEDIATE
N	USER'S CHOICE		USER'S CHOICE	USER'S CHOICE	USER'S CHOICE
O	TORQUE		ORIFICE (RESTRICTION)		OPEN
P	PRESSURE OR VACUUM		POINT (TEST CONNECTION)		
Q	QUANTITY	INTEGRATE OR TOTALIZE	INTEGRATE OR TOTALIZE		
R	RADIATION		RECORD		RUN
S	SPEED OR FREQUENCY	SAFETY		SWITCH	STOP
T	TEMPERATURE			TRANSMIT	
U	MULTIVARIABLE		MULTIFUNCTION	MULTIFUNCTION	
V	VIBRATION OR MECHANICAL ANALYSIS			VALVE, DAMPER OR LOUVER	
W	WEIGHT OR FORCE		WELL, PROBE		
X	UNCLASSIFIED	X-AXIS	ACCESORY DEVICES OR UNCLASSIFIED	UNCLASSIFIED	UNCLASSIFIED
Y	EVENT, STATE, OR PRESENCE	Y-AXIS		AUXILIARY DEVICES	
Z	POSITION, DIMENSION	Z-AXIS		DRIVE, ACTUATOR OR FINAL CTRL ELEMENT	

*NOTE TO DESIGNER: UPDATE "USER'S CHOICE" FIELDS FOR EACH PROJECT.

GENERAL NOTES

1. IN GENERAL, THE P&ID SYMBOLS AND DEVICE IDENTIFICATIONS ARE BASED ON INTERNATIONAL SOCIETY OF AUTOMATION, STANDARD PRACTICE ANSI/ISA-5.1 (2009). SOME MODIFICATIONS, ADDITIONS, AND ALTERATIONS HAVE BEEN MADE AS NEEDED TO ACCOMMODATE THE PROJECT REQUIREMENTS.
2. SOME CONTROL AND INTERLOCK REQUIREMENTS WHICH CAN BE MORE CLEARLY ILLUSTRATED ON SCHEMATIC DRAWINGS HAVE BEEN OMITTED FROM P&ID DRAWINGS.
3. THIS IS A GENERAL LEGEND SHEET. SOME SYMBOLS AND ABBREVIATIONS MAY NOT BE UTILIZED ON THIS SPECIFIC PROJECT. PIPING AND EQUIPMENT LEGEND APPLIES TO P&ID SHEETS.

PIPELINE MATERIAL CODE ABBREVIATIONS

DB-01	POLYETHYLENE TUBING IN SCHEDULE 40 CPVC CARRIER PIPE
DB-02	TEFLON TUBING IN SCHEDULE 40 CPVC CARRIER PIPE
DIP	SECTION 15061, DUCTILE IRON PIPE
SP	SECTION 15062, STEEL PIPE
PVC-XX	SECTION 15061, POLYVINYL CHLORIDE PIPE
PVC-01	SCHEDULE 40 PVC WITH SOLVENT WELDED FITTINGS
PVC-02	SCHEDULE 80 PVC WITH SOLVENT WELDED FITTINGS
PE-XX	SECTION 15067, MISCELLANEOUS PLASTIC PIPE, TUBING, AND ACCESSORIES
PE-06	SECTION 15067, MISCELLANEOUS PLASTIC PIPE, TUBING, AND ACCESSORIES
CPVC-XX	SECTION 15067, MISCELLANEOUS PLASTIC PIPE, TUBING, AND ACCESSORIES
CPVC-01	SCHEDULE 40 CPVC WITH SOLVENT WELDED FITTINGS
CPVC-02	SCHEDULE 80 CPVC WITH SOLVENT WELDED FITTINGS
CRP-XX	SECTION 15060, MISCELLANEOUS PIPING AND PIPE ASSEMBLY
CRP-01	CARPENTER 20 PIPE
HDPE	SECTION 02634, HIGH DENSITY POLYETHYLENE (HDPE) PRESSURE PIPE
SS-XX	SECTION 15064, STAINLESS STEEL PIPE, TUBING, AND ACCESSORIES
SS-02	AERATION PIPING SCHEDULE 10, 304SS
SS-04	PROCESS PIPING SCHEDULE 40, 304SS
SS-05	PROCESS PIPING SCHEDULE 40, 316SS
CSG-XX	SECTION 15065, MISCELLANEOUS STEEL PIPE, TUBING, AND ACCESSORIES
CS-XX	SECTION 15065, MISCELLANEOUS STEEL PIPE, TUBING, AND ACCESSORIES
CS-02	STANDARD WEIGHT STEEL WITH SOCKET WELDED FITTINGS
CS-03	STANDARD WEIGHT STEEL WITH BUTTWELDED FITTINGS
CI-XX	SECTION 15069, CAST IRON SOIL PIPE AND ACCESSORIES
CU-XX	SECTION 15070, COPPER TUBING AND ACCESSORIES

1. XX= numbers 01-20

INSTRUMENT AND I/O ABBREVIATION DEFINITIONS

AAH	ANALYZER ALARM HIGH
AAHH	ANALYZER ALARM HIGH-HIGH
AAL	ANALYZER ALARM LOW
AALL	ANALYZER ALARM LOW-LOW
AAX	ALARM HORN
AAL	STROBE ALARM LIGHT
AE	ANALYZER SENSOR
AI	ANALYZER INDICATION
AIT	ANALYZER INDICATING TRANSMITTER
ASH	ANALYZER SWITCH HIGH
ASHH	ANALYZER SWITCH HIGH-HIGH
CB	CONITROL BLOCK REFERENCE (SCADA LEVEL)
FA	TROUBLE
FAL	FLOW ALARM LOW
FAH	FLOW ALARM HIGH
FC	FLOW CONTROLLER
FI	FLOW DIGITAL INDICATOR (LED OR SCREEN)
FIC	FLOW INDICATING CONTROLLER
FE	PRIMARY FLOW ELEMENT/SENSOR
FG	FLOW SIGHT GAUGE
FIT	FLOW INDICATING TRANSMITTER
FQG	FLOW TOTALIZING GAUGE
FQIT	FLOW TOTALIZING INDICATING TRANSMITTER
FSH	FLOW SWITCH HIGH
FSL	FLOW SWITCH LOW
FY	FLOW SIGNAL CONVERTER, REPEATER, OR ISOLATOR
HIC	HAND INDICATING CONTROLLER
HMS	MOMENTARY PUSHBUTTON OR SELECTOR SWITCH
HS	HAND SWITCH
IE	CURRENT ELEMENT/SENSOR
IAH	CURRENT ALARM HIGH (MOTOR OVERLOAD)
ISH	CURRENT SWITCH HIGH USED TO DETECT HIGH TORQUE)
JA	POWER FAILURE ALARM
JI	POWER INDICATOR
JL	POWER INDICATING LIGHT
JIT	POWER INDICATING TRANSMITTER
KQI	TIME TOTALIZING INDICATOR
LAL	LEVEL ALARM LOW
LALL	LEVEL ALARM LOW-LOW
LAH	LEVEL ALARM HIGH
LAHH	LEVEL ALARM HIGH-HIGH
LE	PRIMARY LEVEL ELEMENT/SENSOR
LG	LEVEL SIGHT GAUGE
LI	LEVEL INDICATOR (LED OR SCREEN)
LSL	LEVEL SWITCH LOW
LSLL	LEVEL SWITCH LOW LOW
LSH	LEVEL SWITCH HIGH
LSHH	LEVEL SWITCH HIGH-HIGH
LY	LEVEL SIGNAL CONVERTER, ISOLATOR, OR REPEATER
OAH	TORQUE ALARM HIGH
OAHH	TORQUE ALARM HIGH HIGH
OSH	TORQUE SWITCH HIGH
OSHH	TORQUE SWITCH HIGH-HIGH
PAL	PRESSURE ALARM LOW
PALL	PRESSURE ALARM LOW-LOW
PAH	PRESSURE ALARM HIGH
PAHH	PRESSURE ALARM HIGH-HIGH
PDG	DIFFERENTIAL PRESSURE GAUGE
PDI	DIFFERENTIAL PRESSURE INDICATOR (LED OR SCREEN)
PDIT	DIFFERENTIAL PRESSURE INDICATING TRANSMITTER
PDAH	DIFFERENTIAL PRESSURE ALARM HIGGH
PDAHH	DIFFERENTIAL PRESSURE ALARM HIGH-HIGH
PDSH	DIFFERENTIAL PRESSURE SWITCH HIGH
PDSHH	DIFFERENTIAL PRESSURE SWITCH HIGH-HIGH
PDSL	DIFFERENTIAL PRESSURE SWITCH LOW
PDSLL	DIFFERENTIAL PRESSURE SWITCH LOW-LOW
PE	PRESSURE SENSOR
PG	PRESSURE GAUGE
PI	PRESSURE INDICATOR (LED OR SCREEN)
PIT	PRESSURE INDICATING TRANSMITTER
PSL	PRESSURE SWITCH LOW
PSH	PRESSURE SWITCH HIGH
SI	SPEED INDICATION (LED OR SCREEN)
SC	SPEED CONTROL
SIT	SPEED INDICATING TRANSMITTER
SSL	SPEED SWITCH LOW
SIT	SPEED INDICATING TRANSMITTER
TAH	TEMPERATURE ALARM HIGH
TAHH	TEMPERATURE ALARM HIGH-HIGH
TAL	TEMPERATURE ALARM LOW
TDI	DIFFERENTIAL TEMPERATURE INDICATOR (LED OR SCREEN)
TDIT	DIFFERENTIAL TEMPERATURE TRANSMITTER
TE	TEMPERATURE SENSOR/RESISTANCE
	TEMPERATURE DETECTOR
TSH	TEMPERATURE SWITCH HIGH
TSHH	TEMPERATURE SWITCH HIGH HIGH
TSL	TEMPERATURE SWITCH LOW
TG	TEMPERATURE GAUGE
TI	TEMPERATURE INDICATOR (LED OR SCREEN)
TIT	TEMPERATURE INDICATING TRANSMITTER
UA	MULTIVARIABLE/COMMON ALARM/COMMON FAULT
UCA	ALARM CONDITION MODIFIED COMMAND
UCR	RUN/START COMMAND
UCS	STOP COMMAND
VAH	VIBRATION ALARM HIGH
WE	PRIMARY WEIGHT SENSOR/LOAD CELL
WG	WEIGHT GAUGE
WIT	WEIGHT INDICATING TRANSMITTER
YA	GENERAL ALARM EVENT
YI	EVENT INDICATION (LED OR SCREEN)
YIR	RUNNING INDICATION
YIS	STOPPED INDICATION
YL	EVENT INDICATING LIGHT
YLR	RUNNING INDICATING LIGHT
YLS	STOPPED INDICATING LIGHT
ZI	POSITION INDICATOR
ZC	POSITION SET POINT
ZCC	CLOSE COMMAND
ZCO	OPEN COMMAND
ZIC	CLOSED INDICATION
ZIO	OPEN INDICATION
ZLC	CLOSED INDICATING LIGHT
ZLO	OPEN INDICATING LIGHT
ZSC	CLOSED POSITION SWITCH
ZSO	OPEN POSITION SWITCH
ZIT	POSITION INDICATING TRANSMITTER
ZT	POSITION TRANSMITTER

GENERAL INSTRUMENT SYMBOLS

FIELD MOUNTED DISCRETE INSTRUMENT

PILOT LIGHT

CONTROL BLOCK DESCRIPTION REFERENCE SEE SPECIFICATION 13550

DISCRETE INSTRUMENT MOUNTED ON FACE PRIMARY OF PANEL

DISCRETE INSTRUMENT MOUNTED BEHIND OR INSIDE OF PRIMARY PANEL

DISCRETE INSTRUMENT MOUNTED ON FACE OF LOCAL PANEL

DISCRETE INSTRUMENT MOUNTED BEHIND OR INSIDE OF LOCAL PANEL

SINGLE INSTRUMENT HOUSING CONTAINING TWO (OR MORE) INSTRUMENTATION FUNCTIONS

I — GENERAL CONTROL INTERLOCK FUNCTION, SEE SCHEMATICS AND SYSTEM SPECIFICATIONS FOR SPECIFIC FUNCTION

DIGITAL SYSTEMS INTERFACE SYMBOLS

NOTE: REFER TO DETAILED SYSTEM SPECIFICATIONS FOR FUNCTIONAL DESCRIPTION. ALSO SEE I/O SCHEDULES FOR COMPLETE INPUT AND OUTPUT LISTINGS.

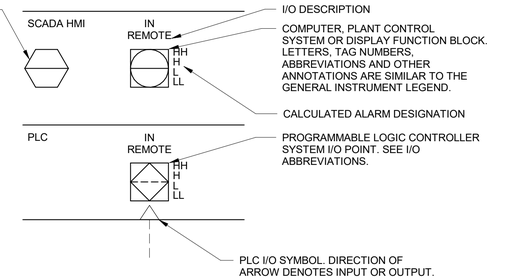

- DISCRETE INPUT
- DISCRETE OUTPUT
- ANALOG INPUT
- ANALOG OUTPUT
- PULSE INPUT

INSTRUMENTATION SYMBOLOGY AND DESIGNATIONS

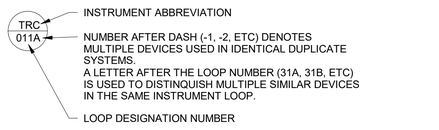

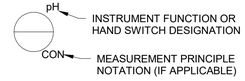

FUNCTION DESIGNATIONS AND ABBREVIATIONS

MEASUREMENT PRINCIPLE NOTATIONS

CON	CONDUCTANCE
DP	DIFFERENTIAL PRESSURE SENSING
FLN	FLOW NOZZLE
FLT	FLOW TUBE
GWR	GUIDED WAVE RADAR
RAD	RADAR
US	ULTRASONIC
VENT	VENTURI TUBE

CALCULATED ALARM DESIGNATIONS

L	LOW
LL	LOW-LOW
H	HIGH
HH	HIGH-HIGH

INDICATING LIGHT/ALARM DESIGNATIONS

OVRLD	OVERLOAD
TRQ HI	TORQUE HIGH
TRQ HI-HI	TORQUE HIGH HIGH

INSTRUMENT FUNCTIONS

K	GAIN OR ATTENUATE (INPUT:OUTPUT)
-K	GAIN AND REVERSE
Σ	ADD OR SUM (ADD AND SUBTRACT)
Δ	SUBTRACT (DIFFERENCE)
√‾	EXTRACT SQUARE ROOT
÷	DIVIDE
F(X)	CHARACTERIZE SIGNAL
>	HIGH-SELECT
<	LOW-SELECT
×	MULTIPLY
∫	INTEGRATE (TIME INTEGRAL)
CH4	METHANE
CL2	CHLORINE RESIDUAL
CO2	CARBON DIOXIDE
DO	DISSOLVED OXYGEN
H2S	HYDROGEN SULFIDE
LEL	LOWER EXPLOSIVE LIMIT
MCC	MOTOR CONTROL CENTER
MLSS	MIXED LIQUOR SUSPENDED SOLIDS
02	OXYGEN (PURITY)
03	OZONE
pH	pH
TURB	TURBIDITY
COND	CONDUCTIVITY

HAND SWITCH DESIGNATIONS

FR	FORWARD-REVERSE
OCA	OPEN-CLOSE-AUTO
OOR	ON-OFF-REMOTE
OOA	ON-OFF-AUTO
LOR	LOCAL-OFF-REMOTE
OO	ON-OFF
OC	OPEN-CLOSE
LR	LOCAL REMOTE
HOA	HAND-OFF-AUTO
LOA	LOCAL-OFF-AUTO
HOR	HAND-OFF-REMOTE
OSC	OPEN-STOP-CLOSE
FWD	FORWARD
REV	REVERSE

TRANSDUCER & CONVERTER DESIGNATION

E	VOLTAGE
FSK	FREQUENCY SHIFT KEYING
H	HYDRAULIC
I	CURRENT
P	PNEUMATIC PULSE
PD	PULSE DURATION
PF	PULSE FREQUENCY
R	RESISTANCE (ELECTRICAL)

EXAMPLE: I/P = CURRENT TO PNEUMATIC TRANSDUCER

POWER SUPPLY ABBREVIATIONS

AS	AIR SUPPLY
ES	ELECTRIC SUPPLY
GS	GAS SUPPLY
HS	HYDRAULIC SUPPLY
NS	NITROGEN SUPPLY
SS	STEAM SUPPLY
WS	WATER SUPPLY
24V	24VDC
120V	120VAC
480V	480VAC

120V — POWER SUPPLY SOURCE LABEL. USED ONLY WHERE NECESSARY TO HELP CLARIFY AN INSTRUMENT OR SYSTEM FUNCTION.

*NOTE TO DESIGNER: OR 24VDC OR 480VAC

NO.	BY	CHK	APP'D
0	BLB	JSM	BLB

REVISIONS AND RECORD OF USE

ISSUED FOR CONSTRUCTION 5/19/2020

DATE

REGISTERED PROFESSIONAL ENGINEER — BRIAN L. BUTLER — No. E 16569 — ELECTRICAL — STATE OF CALIFORNIA

BLACK & VEATCH

JOINT VENTURE

FILANC — BLACK & VEATCH

CITY OF MORRO BAY
MORRO BAY WATER RECLAMATION FACILITY (WRF)

LEGEND & ABBREVIATIONS
P&ID
SHEET 2

DESIGNED: BLB
DETAILED: PVR
CHECKED: JSM, BDS
APPROVED: BLB
DATE: 5/19/2020

0 1/2 1
IF THIS BAR DOES NOT MEASURE 1" THEN DRAWING IS NOT TO FULL SCALE

PROJECT NO. 400530

00-I-002
SHEET 87 OF 412

PLOTTED: 5/18/2020 4:01:36 PM
D400530

SYSTEM CODE ABBREVIATIONS

AA	AIR-AERATION
ACE	ACETIC ACID
ACT	ACETYLENE
GAC	ACTIVATED CARBON - GRANULAR
AIR	PROCESS AIR
AER	AERATION SYSTEM
IA	AIR, INSTRUMENT
ARW	AIR WASH
ALS	ALUMINUM SULFATE
NSO4	AMMONIUM SULFATE
NH3	ANHYDROUS AMMONIA
AS	ANTI-SEALANT
ANTI	ANTISCALANT
NHOH	AQUA AMMONIA
ARG	ARGON
ASH	ASH
BWH	BACKWASH - MEMBRANE/FILTER
BAL	BALLASTED FLOCCULATION
BIO	BIOSOLIDS
BIT	BIOTOWER
BLS	BLENDED SLUDGE
BNR	BNR
BRN	BRINE
CA	CITRIC ACID
CAL	CALCITE
CACL	CALCIUM HYPOCHLORITE
CATS	CALCIUM THIOSULFATE
C02	CARBON DIOXIDE
CAS	CARBON SLURRY
HCO3	CARBONIC ACID
CEN	CENTRATE
CEB	CHEMICAL ENHANCED BACKWASH - MEMBRANE
CHEM	CHEMICALS, GENERIC OR MULTIPLE
CL2	CHLORINE
CLO2	CHLORINE DIOXIDE
CA	CITRIC ACID
CIP	CLEAN IN PLACE
COA	COAGULATION
CAI	COMPRESSED AIR - INSTRUMENT
CMS	COMPRESSED AIR - SERVICE
CUS	COPPER SULFATE
CI	CORROSION INHIBITOR
DCL	DECHLORINATION
DET	DETERGENT
DWT	DEWATERING
FUE	DIESEL FUEL
DGG	DIGESTER GAS
DGM	DIGESTER GAS MIXING
DGS	DIGESTER SLUDGE
DGA	DIGESTION - AEROBIC
DIG	DIGESTION - ANAEROBIC
DCB	DISINFECTION CONTACT BASIN
DAF	DISSOLVED AIR FLOTATION
DRN	DRAINAGE
DWT	DEWATERING
EFP	EFFLUENT PUMPING
EXH	ENGINE EXHAUST
EQB	EQUALIZATION BASIN
FEC	FERRIC CHLORIDE
FES	FERRIC SULFATE
FRC	FERROUS CHLORIDE
FRS	FERROUS SULFATE
FLT	FILTRATION
FSW	FILTER SOLIDS WASTE
FUE	DIESEL FUEL
FLC	FLOCCULATION
GOX	GASEOUS OXYGEN
GSL	GASOLINE
GEN	GENERATOR
GRS	GREASE
GRT	GRIT
HSO4	SULFURIC ACID
HEL	HELIUM
HFL	HYDRAULIC FLUID
HCL	HYDROCHLORIC ACID
HFS	HYDROFLUOSILIC ACID (FLUORIDE)
HYD	HYDROGEN
PER	HYDROGEN PEROXIDE
IA	AIR, INSTRUMENT
INC	INCINERATION
INFP	INFLUENT PUMPING
INT	INTAKE
LAG	LAGOON STORAGE
LAP	LAND APPLICATION
LAS	LIQUID AMMONIA SULFATE
CAH	LIME - HYDRATED
CAO	LIME - QUICKLIME
LIM	LIME STABILIZATION
LOX	LIQUID OXYGEN
LPG	LP GAS OR PROPANE GAS
MGOH	MAGNESIUM HYDROXIDE
MEM	MEMBRANE
MEG	METHANE GAS
MTH	METHANOL
MXL	MIXED LIQUOR
NACL	SODIUM HYPOCHLORITE
NAOH	SODIUM HYDROXIDE
NG	NATURAL GAS
NHS	SODIUM BISULFATE
NIT	NITROGEN
NIO	NITROUS OXIDE
NOCL	SODIUM HYPOCHLORITE
NPW	NON-POTABLE WATER
ODC	ODOR CONTROL
OIL	OIL
FO	OIL - FUEL
OZN	OZONE
OZD	OZONE DESTRUCT
PPP	PHOSPHATE
PO4	PHOSPHORIC ACID
PCL	POLYALUMINUM CHLORIDE
POLF	POLYMER
KMN	POTASSIUM PERMANGANATE
PAC	POWDERED ACTIVATE CARBON
PAR	PRE-AERATION
PSD	PRESEDIMENTATION
PRC	PRIMARY CLARIFICATION
PRS	PRIMARY SLUDGE
POLY	POLYMER
PRW	PLANT RECYCLED WATER
WWP	RAW WASTEWATER PUMPING
RWP	RAW WATER PUMPING
RWS	RAW WATER STORAGE
RCS	RECIRCULATED SLUDGE
RCW	RECLAIMED WATER
REF	REFRIGERANT
RES	RESIDUALS
RAS	RETURN ACTIVATED SLUDGE
RO	REVERSE OSMOSIS
SAN	SANITARY SYSTEM
SCR	SCREENINGS
SCM	SCUM
SCL	SECONDARY CLARIFICATION
SEP	SEPTAGE
SET	SETTLED WATER
SEW	SEWAGE
NAC	SODA ASH
NAL	SODIUM ALUMINATE
NAM	SODIUM ALUMINATE
NBC	SODIUM BICARBONATE
NHS	SODIUM BISULFITE
NCL	SODIUM CHLORIDE
NCL2	SODIUM CHLORITE
NAF	SODIUM FLUORIDE
NAX	SODIUM HEXAMETAPHOSPHATE
NAOH	SODIUM HYDROXIDE
NOCL	SODIUM HYPOCHLORITE
NASF	SODIUM SILICOFLUORIDE
STM	STEAM
STS	STORM SEWER
STW	STORM WATER
SO2	SULFUR DIOXIDE
HSO4	SULFURIC ACID
SW	SURFACE WASH
TERT	TERTIARY TREATMENT
TPRS	THICKENED PRIMARY SLUDGE
TWAS	THICKENED WASTE ACTIVATED SLUDGE
THCK	THICKENING
TW	TREATED WATER
TF	TRICKLING FILTER
UV	ULTRAVIOLET
VAC	VACUUM
WW	WASH WATER
WAS	WASTE ACTIVATED SLUDGE
WWW	WASTE WASH WATER
CDW	WATER - CONDENSATE
COLW	WATER - COOLING
DW	WATER - DISTILLED WATER
FPW	WATER - FIRE PROTECTION
IRW	WATER - IRRIGATION
OZW	WATER - OZONATED
SWT	WATER - SEAL
HW	WATER - WATER HEATING
DEIW	WATER DEIONIZED
NPW	WATER NON-POTABLE
PEW	WATER PLANT EFFLUENT
PW	WATER POTABLE
RW	WATER RAW
WWT	WET WEATHER TREATMENT
ZOP	ZINC ORTHOPHOSPHATE
PRW	PLANT RECYCLED WATER

PROCESS CODE ABBREVIATIONS

AA_X	AIR-AERATION
ANTI_X	ANTISCALANT
AS_X	AIR-SCOUR
ATS_X	AUTOMATIC TRANSFER SWITCH
AWS_X	AERATED WAS
CA_X	CITRIC ACID
CAKE_X	DEWATERED SLUDGE CAKE
CHANNEL_X	PROCESS CHANNEL
CIP_X	CLEAN IN PLACE
CIPR_X	REVERSE OSMOSIS CIP RETURN
CIPS_X	REVERSE OSMOSIS CIP SUPPLY
D_X	DRAIN
DRN_X	DRAIN
FA_X	FOUL AIR
FIW_X	FILTER INLET WASH
FBW_X	FILTER BACKWASH
FF_X	REVERSE OSMOSIS FORWARD FLUSH
FO_X	FIBER OPTIC
FOW_X	FILTERED OUTFALL WATER
FSCM_X	FILTER SCUM
FSW_X	FILTER SOLIDS WASTE
GEN_X	GENERATOR FUEL
IA_X	INSTRUMENT AIR
IPR_X	INDIRECT POTABLE REUSE WATER
LAS_X	LIQUID AMMONIA SULFATE
MFF_X	MICROFILTRATION FILTRATE
ML_X	MIXED LIQUOR
NAOH_X	SODIUM HYDROXIDE
NHS_X	SODIUM BISULFATE
NOCL_X	SODIUM HYPOCHLORITE
NPW_X	NON-POTABLE WATER
OF_X	OVERFLOW
PCR_X	REVERSE OSMOSIS PERMRATE
PEW_X	PLANT EFFLUENT WATER
POLY_X	POLYMER
POW_X	PLANT OUTFALL WATER
PRW_X	PLANT RECYCLED WATER
RAS_X	RETURNED ACTIVATED SLUDGE
RCW_X	RECLAIMED WATER
ROC_X	REVERSE OSMOSIS CONCENTRATE
ROF_X	REVERSE OSMOSIS FEED
ROP_X	REVERSE OSMOSIS PERMEATE
SA_X	SULFURIC ACID
SAN_X	SANITARY SEWER
STW_X	STORM WATER
UVE_X	ULTRAVIOLET TREATMENT EFFLUENT
WAS_X	WASTE ACTIVATED SLUDGE
WWR_X	WASTEWATER-RAW
WWS_X	WASTEWATER-SCREENED

X = PROCESS CODE SUFFIX USED TO FURTHER SPECIFY A PROCESS STREAM
(I.E. CL2_G FOR CHLORINE GAS OR CL2_S FOR CHLORINE SOLUTION)

FUNCTION CODE ABBREVIATIONS

ACMB	ACTIVATION CHAMBER
ACD	AERATOR, COARSE BUBBLE DIFFUSED
AEFD	AERATOR, FINE PORE DIFFUSED
AFS	AERATOR, FLOATING SURFACE
AES	AERATOR, SURFACE
AFC	AFTERCOOLER
AD	AIR DRYER
AF	AIR FILTER
AR	AIR RECEIVER OR REGULATOR
AS	AIR SEPARATOR
AST	AIR STRIPPER
ATS	AUTOMATIC TRANSFER SWITCH
BFP	BACKFLOW PREVENTER
BSNA	BASIN, AERATION
BSNX	BASIN, ANOXIC/OXIC
BNR	BASIN, BNR
BSNC	BASIN, CHLORINE CONTACT
BSNO	BASIN, OXIC
RBSN	BASIN, RECTANGULAR SEDIMENTATION
BFPS	BELT FILTER PRESS
B	BIN (STORAGE - ALL TYPES)
BA	BIN ACTIVATOR
BLC	BLOWER, CENTRIFUGAL
BL	BLOWER, POSITIVE DISPLACEMENT
BLR	BOILER
BDZ	BULLDOZER
CAT6	CATEGORY 6 METALLIC CABLE
CCLM	CALIBRATION COLUMN
CFG	CENTRIFUGE
CGR	CLASSIFIER, GRIT
CHF	CHEMICAL FEEDER
CGS	CHLORINE GAS SCRUBBER
PCLR	CLARIFIER, PRIMARY
SCLR	CLARIFIER, SECONDARY
CGR	CLASSIFIER, GRIT
CHH	CHEMICAL HAND HOLE
CW	CLEARWELL
CMP	COMPRESSOR
CMB	COMPRESSOR, LIQUID RING
CMR	COMPRESSOR, ROTARY SCREW
CMPS	COMPRESSOR, STEAM
CTR	CONTAINER, PROCESS
COB	CONVEYOR, BELT
COS	CONVEYOR, SCREW
CFA	COVER, ALUMINUM DOME BASIN
CFD	COVER, FIXED DIGESTER
CFL	COVER, FLOATING DIGESTER
DCG	COVER, GAS HOLDER
DCM	COVER, MEMBRANE
CRN	CRANE
CRG	CRANE, GANTRY
CRJ	CRANE, JIB
CRP	CRANE, PORTABLE GANTRY
CRT	CRANE, TRAVELLING BRIDGE
CYL	CYLINDER, CHLORINE
CYG	CYLINDER, GAS
DWS	DEWATERING SCREW
DPS	DIAPHRAGM SEAL
DIF	DIFFUSER, CHANNEL
DFB	DIFFUSER BANK
DIP	DIFFUSER, PIPELINE
DIR	DIFFUSER, TANK
DGE	DIGESTER, AEROBIC
DGAP	DIGESTER, ANAEROBIC PRIMARY
DGAS	DIGESTER, ANAEROBIC SECONDARY
DSUV	DISINFECTION UNIT, UV
DAF	DISSOLVED AIR FLOTATION THICKENER
DUC	DUST COLLECTOR
EDC	EDUCTOR
EQPE	ELECTRICAL EQUIPMENT, GENERAL
EWSH	EMERGENCY EYE WASH FOUNTAIN
ES	ETHERNET SWITCH
ESHR	EMERGENCY SHOWER
EMEW	EMERGENCY SHOWER & EYEWASH
EQPB	EQUIPMENT, BUILDING SERVICES
EQPT	EQUIPMENT, GENERAL OR UNSPECIFIED
EV	EVAPORATOR
EXC	EXPANSION CHAMBER
FAX	FAN, AXIAL FLOW
FAN	FAN, CENTRIFUGAL
FO	FIBER OPTIC CABLE
FPP	FIBER PATCH PANEL
FRWL	FIREWALL
FST	FENCE STIRRER
FTSP	FILTER GAS PARTICULATE
FLC	FILTER, CARTRIDGE TYPE
FLT	FILTER, UNDERDRAINS OR PRESSURE
FSW	FILTER, SURFACE WASH EQUIPMENT
FTTNG	FITTING, MISCELLANEOUS
FAR	FLAME ARRESTER
FC	FLAME CHECK
FLCH	FLOCCULATOR, HORIZONTAL
FLCV	FLOCCULATOR, VERTICAL
FD	FLOOR DRAIN
FS	FLOW SPLITTER
FE	FLUME, PARSHALL
FMSP	FOAM SEPARATOR
FL	FORKLIFT
CHF	GAS FEEDER
GF	GAS FLARE
GWH	GAS WATER HEATER
GFL	GATE, FLAP
GSD	GATE, SLIDE
GSC	GATE, SLUICE
G	GATE, WEIR
GEN	GENERATOR, ENGINE (BACKUP POWER)
GBT	GRAVITY BELT THICKENER
GVT	GRAVITY THICKENER
GRD	GRINDER PULVERIZER
GRB	GRIT BASIN, VORTEX TYPE
GRV	GRIT SCREW CONCENTRATOR
HEX	HEAT EXCHANGER
HMI	HUMAN-MACHINE INTERFACE
HST	HOIST
HSC	HOIST, CHAIN
HSE	HOIST, WIRE ROPE
HYDF	HYDRANT, FIRE
HYDW	HYDRANT, WALL
HYC	HYDROCYCLONE
INJ	INJECTOR, CHEMICAL
KMM	KEYBOARD, MONITOR, MOUSE
LS	LIME SLAKER
LP	LIGHTING PANEL
LSP	LOCAL START PANEL
MCC	MOTOR CONTROL CENTER
MFM	MEMBRANE
MBMF	MEMBRANE, MICROFILTRATION
MBNF	MEMBRANE, NANOFILTRATION
MBRO	MEMBRANE, REVERSE OSMOSIS
MBUF	MEMBRANE, ULTRAFILTRATION
MXC	MIXER, CARBON
FLM	MIXER, FLOCCULATION
M	MOTOR
MCC	MOTOR CONTROL CENTER
MXI	MIXER, IN-LINE
MXPG	MIXER, PUGMILL
MXR	MIXER, RAPID
MXS	MIXER, STATIC
MXP	MIXER, SUBMERSIBLE, PROP OR BLENDER
MM	MUFFIN MONSTER
OIT	OPERATOR INTERFACE
ORD	OVERFLOW ROOF DRAIN
ODU	OZONE DESTRUCT UNIT
OGEN	OZONE GENERATOR
PLC	PROGRAMMABLE LOGIC CONTROLLER
PSU	OZONE POWER SUPPLY UNIT
PP	PACKAGED PLANT
PCN	PARTICLE COUNTER
PLT	PELLETIZER
PS	PENSTOCK
PIPE	PIPE
PSE	PLATE SETTLER
INJ	POLYMER INJECTOR RING
PP	POWER PANEL
PBC	PRESSURE BUILDING COIL
PD	PULSATION DAMPNER
PAD	PUMP, AIR DIAPHRAGM
PCL	PUMP, CENTRIFUGAL
PDM	PUMP, DIAPHRAGM METERING
PHW	PUMP, HEATING WATER
PHE	PUMP, HORIZONTAL END SUCTION
PSC	PUMP, HORIZONTAL SPLIT CASE
PPS	PUMP, PERISTALTIC
PPL	PUMP, PLUNGER
PPC	PUMP, PROGRESSING CAVITY
PSE	PUMP, SCREW ENCLOSED
PSE	PUMP, SCREW OPEN
PCL	PUMP, SUBMERSIBLE
PCH	PUMP, SUBMERSIBLE CHOPPER
PSS	PUMP, SUBMERSIBLE SUMP
PSP	PUMP, SUMP
P	PUMP, GENERAL OR UNSPECIFIED
PVD	PUMP, VERTICAL DIFFUSION VANE
PVE	PUMP, VERTICAL END SUCTION
PVW	PUMP, VERTICAL WET PIT
RSV	RESERVOIR
RCO	RESIDUAL COLLECTOR
RM	ROTAMETER
RD	RUPTURE DISK
RTR	ROUTER
SAMP	SAMPLER
SCL	SCALE
SC	SCALE, WEIGHT
SCRHT	SCREEN, HORIZONTAL
SCRI	SCREEN, INLINE SLUDGE
SCRA	SCREEN, MANUAL OR MECH CLEANED BAR
SCRS	SCREEN, STEP
SCT	SCREEN, TRAVELLING WATER
SCR	SCREEN, VIBRATORY
SCU	SCRUBBER
SMC	SCUM COLLECTOR
SCW	SCUM WEIR - ROTATING
SEP	SEPARATOR, MOISTURE OR CYCLONE
SGT	SIGHT GLASS - TALL
SG	SIGHT GAUGE
SIL	SILENCER
SLC	SLUDGE COLLECTOR, CIRCULAR
GCLR	SLUDGE COLLECTOR, CROSS
SFC	SLUDGE COLLECTOR, FLOC-CLARIFYING
SCS	SLUDGE COLLECTOR, SEC CLARIFIERS
SSC	SLUDGE COLLECTOR, SOLIDS CONTACT
SLCS	SLUDGE COLLECTOR, STRAIGHT LINE
GRD	SLUDGE GRINDER, INLINE OR CHANNEL
SBL	SOLIDS BLENDER-INLINE
STR	STRAINER
STRB	STRAINER BASKET TYPE
STRY	STRAINER Y TYPE
SRCH	SURGE CHAMBER
SRVR	SERVER
SWB	SWITCH BOARD
TSA	TANK, ABOVE GROUND STORAGE
TCN	TANK, AMMONIA STORAGE
TCR	TANK, CRYOGENIC STORAGE
DWT	TANK, DOUBLE WALL
TSE	TANK, ELEVATED STORAGE
TX	TANK, EXPANSION
TNK	TANK, FRP CHEMICAL STORAGE
TNK	TANK, GENERAL OR UNSPECIFIED
TCP	TANK, METHANOL
SMPT	TANK, SAMPLER
TCS	TANK, CHLORINE CONTACTOR
TSW	TANK, FLAT TOP STEEL WATER
XFR	TRANSFORMER
TRP	TRAP, DRIP
TRPS	TRAP, SEDIMENT
TRK	TRUCK
TB	TURBINE
TBC	TURBINE COMPRESSOR
TBG	TURBINE ENGINE
UPS	UNINTERRUPTABLE POWER SUPPLY
UVE	UV REACTOR
UVL	UV REACTOR, HORIZONTAL OR VERTICAL
VB	VACUUM BREAK
VJTR	VACUUM EJECTOR
VRG	VACUUM REGULATOR
AVR	VALVE, AIR RELEASE
AVRV	VALVE, AIR-VACUUM
VAG	VALVE, ANGLE
VBM	VALVE, AWWA BALL
VBF	VALVE, AWWA BUTTERFLY
VBFP	VALVE, BACKFLOW PREVENTER
VBM	VALVE, BALL MISCELLANEOUS
VCK	VALVE, CHECK
VCN	VALVE, CONE
VDG	VALVE, DIAPHRAGM OPERATED
VGD	VALVE, DOUBLE DISC GATE
VPE	VALVE, ECCENTRIC PLUG
VER	VALVE, EXPLOSION RELIEF
VFW	VALVE, FOUR WAY
VG	VALVE, GATE
V	VALVE, GENERAL OR UNSPECIFIED
VGL	VALVE, GLOBE
VBI	VALVE, INDUSTRIAL BUTTERFLY
VKG	VALVE, KNIFE GATE
VMR	VALVE, MATERIAL HANDLING ROTARY
VMD	VALVE, MUD
VND	VALVE, NEEDLE
PTV	VALVE, PILOT
VPN	VALVE, PINCH
VPO	VALVE, PISTON OPERATED
VPL	VALVE, NON-ECCENTRIC PLUG
VPC	VALVE, PRESSURE REDUCING
VPC	VALVE, PRESSURE SUSTAINING
VSP	VALVE, PRESSURE RELIEF
VSPV	VALVE, PRESSURE/VACUUM RELIEF
VP	VALVE, PROCESS
VGR	VALVE, RESILIENT SEATED GATE
VS	VALVE, SAFETY
VSLV	VALVE, SLEEVE
VSL	VALVE, SOLENOID
VTV	VALVE, TELESCOPING
VTS	VALVE, THERMAL SHUTOFF
VTW	VALVE, THREE WAY
VVB	VALVE, VACUUM BREAKER
VSV	VALVE, VACUUM RELIEF
VVP	VALVE, V-PORT BALL
VAP	VAPORIZER
VFD	VARIABLE FREQUENCY DRIVE
VSLB	VESSEL, BOOT
WC	WEIR, CIPOLETTI
WR	WEIR, RECTANGULAR
WV	WEIR, V-NOTCH
WLHC	WELL, HORIZONTAL COLLECTOR
WLV	WELL, VERTICAL

NO.	BY	CHK	APP'D
0	BLB	JSM	BLB

ISSUED FOR CONSTRUCTION — 5/19/2020

REVISIONS AND RECORD OF USE — DATE

REGISTERED PROFESSIONAL ENGINEER
BRIAN L. BUTLER
No. E 16569
ELECTRICAL
STATE OF CALIFORNIA

BLACK & VEATCH

JOINT VENTURE

BLACK & VEATCH

FILANC

CITY OF MORRO BAY
MORRO BAY WATER
RECLAMATION FACILITY (WRF)

LEGEND & ABBREVIATIONS
P&ID
SHEET 3

DESIGNED: BLB
DETAILED: PVR
CHECKED: JSM, BDS
APPROVED: BLB
DATE: 5/19/2020

0 1/2 1
IF THIS BAR DOES NOT MEASURE 1" THEN DRAWING IS NOT TO FULL SCALE

PROJECT NO.
400530

00-I-003
SHEET
88 OF 412

PLOTTED: 5/18/2020 3:58:23 PM
D400530

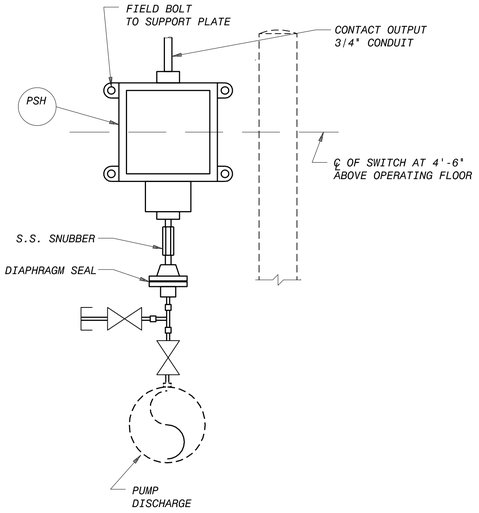

PRESSURE SWITCH
INSTALLATION DETAIL
NO SCALE

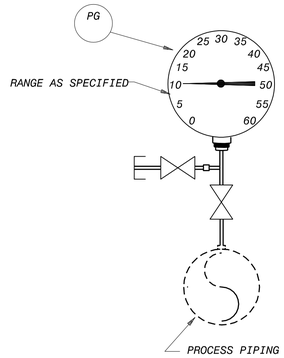

PRESSURE GAUGE
INSTALLATION DETAIL
NO SCALE

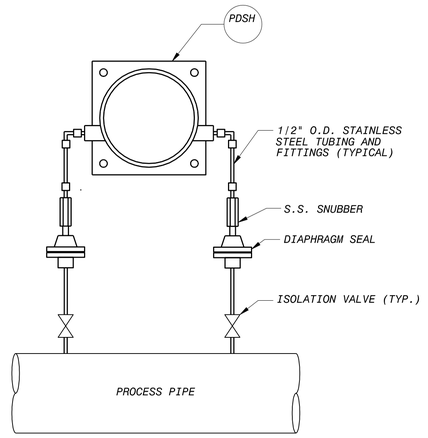

DIFFERENTIAL PRESSURE SWITCH
INSTALLATION DETAIL
NO SCALE

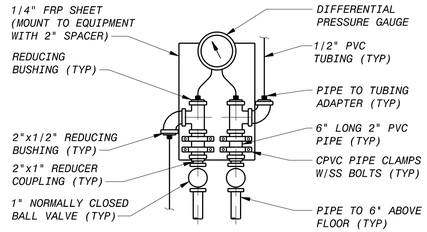

PRESSURE DIFFERENTIAL INDICATOR
INSTALLATION DETAIL
NO SCALE

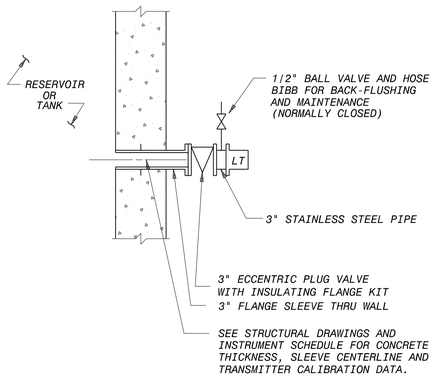

FLANGE MOUNTED PRESSURE SENSING
LEVEL TRANSMITTER INSTALLATION DETAIL
NO SCALE

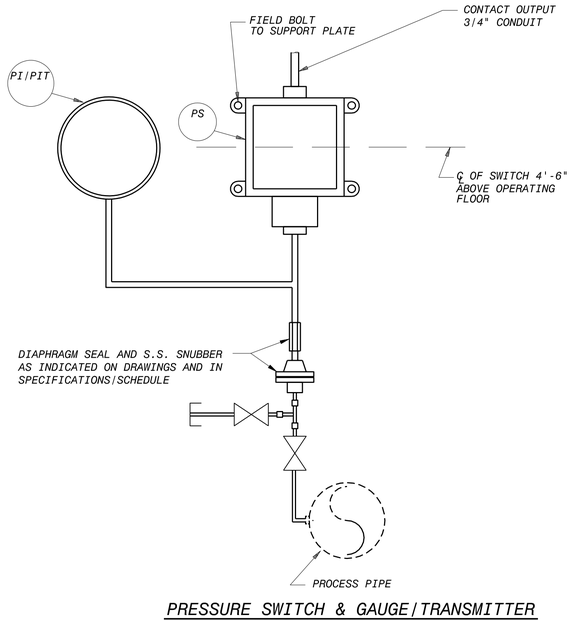

PRESSURE SWITCH & GAUGE/TRANSMITTER
INSTALLATION DETAIL
NO SCALE

NO.	BY	CHK	APP
0	BLB	JSM	BLB

REVISIONS AND RECORD OF USE

ISSUED FOR CONSTRUCTION

DATE 5/19/2020

REGISTERED PROFESSIONAL ENGINEER
BRIAN L. BUTLER
No. E 16569
Exp. 03/31/20
ELECTRICAL
STATE OF CALIFORNIA

BLACK & VEATCH

JOINT VENTURE

FILANC

BLACK&VEATCH

CITY OF MORRO BAY
MORRO BAY WATER
RECLAMATION FACILITY (WRF)

INSTALLATION DETAIL 1

DESIGNED: BLB
DETAILED: PVR, VM
CHECKED: JSM, BDS
APPROVED: BLB
DATE: 5/19/2020

0 1/2 1
IF THIS BAR DOES NOT MEASURE 1" THEN DRAWING IS NOT TO FULL SCALE

PROJECT NO.
400530

00-I-501
SHEET
89 OF 412

RAN84017, 13-03-2020 09:34:00
GAW78494, 22-03-18 12:25:00 PM
RAN84017

D400530

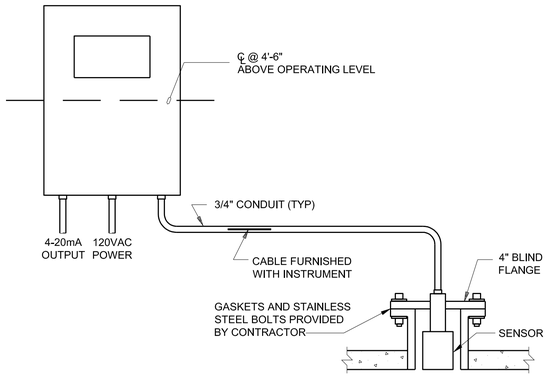

ULTRASONIC LEVEL TRANSMITTER
INSTALLATION DETAIL

NO SCALE TYPICAL FOR:

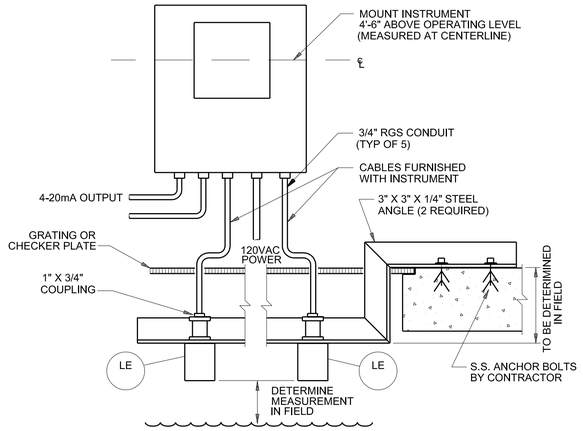

ULTRASONIC DIFFERENTIAL LEVEL TRANSMITTER
INSTALLATION DETAIL

NO SCALE
COORDINATE LOCATION OF TRANSDUCERS WITH GRATING CUTOUT

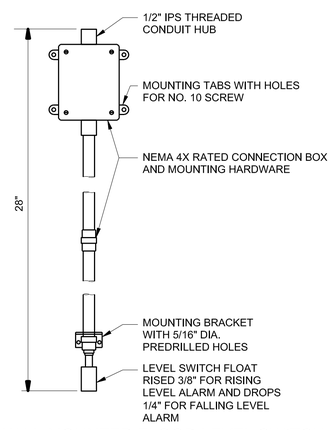

WALL MOUNTED FLOOD LEVEL SWITCH
INSTALLATION DETAIL

NO SCALE

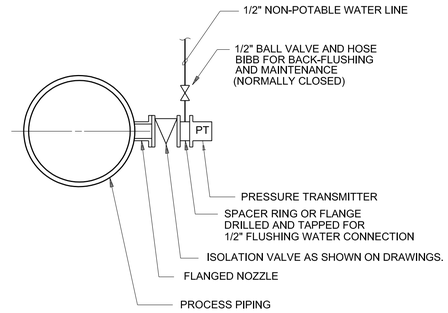

FLANGE MOUNTED PRESSURE TRANSMITTER
INSTALLATION DETAIL

NO SCALE

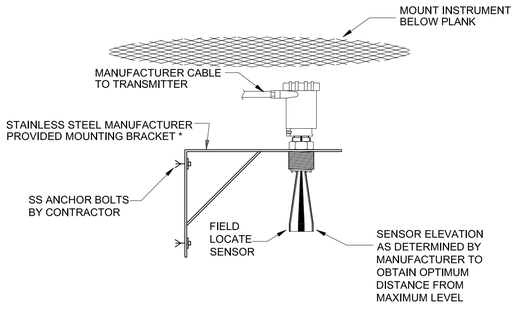

RADAR TYPE LEVEL TRANSMITTER
INSTALLATION DETAIL

NO SCALE

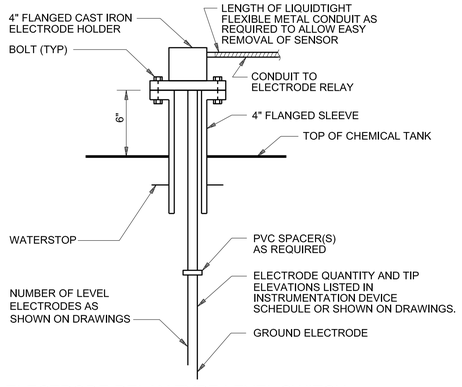

ELECTRODE RELAY TYPE LEVEL SWITCH,
ELETRODE INSTALLATION DETAIL

NO SCALE

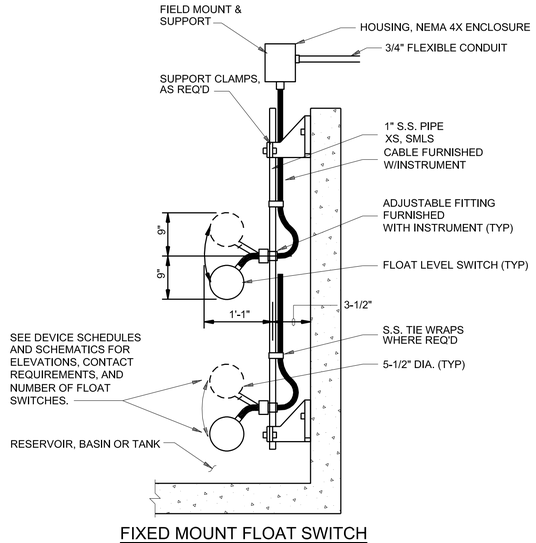

FIXED MOUNT FLOAT SWITCH
INSTALLATION DETAIL

NO SCALE

NO.	BY	CHK	APP	DATE	REVISIONS AND RECORD OF USE
0	BLB	JSM	BLB	5/19/2020	ISUED FOR CONSTRUCTION

REGISTERED PROFESSIONAL ENGINEER
BRIAN L. BUTLER
No. E 16569
Exp. 03/31/20
ELECTRICAL
STATE OF CALIFORNIA

BLACK & VEATCH

JOINT VENTURE

FILANC

BLACK & VEATCH

CITY OF MORRO BAY
MORRO BAY WATER
RECLAMATION FACILITY (WRF)

INSTALLATION DETAIL 2

DESIGNED: BLB
DETAILED: PVR, VM
CHECKED: JSM, BDS
APPROVED: BLB
DATE: 5/19/2020

0 1/2 1
IF THIS BAR DOES NOT MEASURE 1" THEN DRAWING IS NOT TO FULL SCALE

PROJECT NO.
400530

00-I-502
SHEET
90 OF 412

RAN84017, 13-03-2020 09:32:33
GAW78494, 22-03-18 12:25:00 PM
RAN84017

D400530

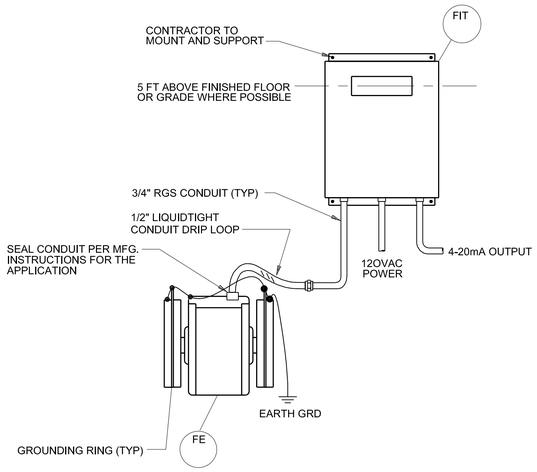

MAGNETIC FLOWMETER INSTALLATION DETAIL

NO SCALE

NOTE: PIPE TO BE SUPPORTED ON BOTH SIDES OF METER.

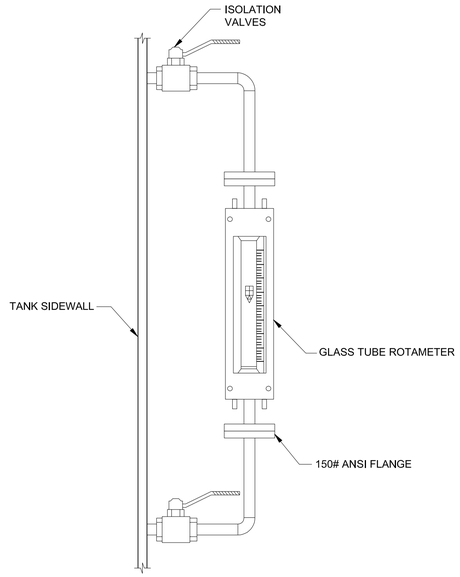

LIQUID SERVICE ROTAMETER INSTALLATION DETAIL

NO SCALE

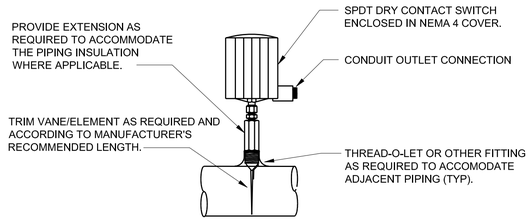

TARGET-TYPE FLOW SWITCH INSTALLATION DETAIL

NO SCALE

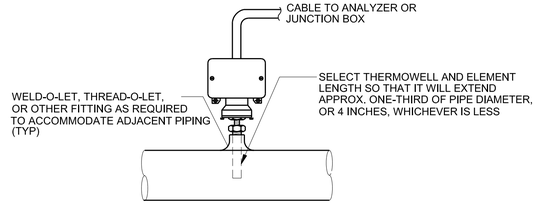

LOW TEMPERATURE SWITCH INSTALLATION DETAIL

NO SCALE

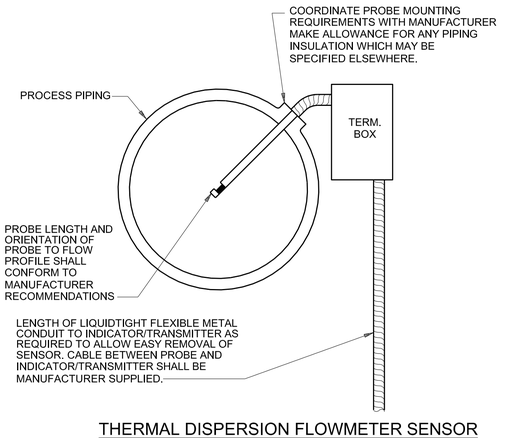

THERMAL DISPERSION FLOWMETER SENSOR INSTALLATION DETAIL

NO SCALE

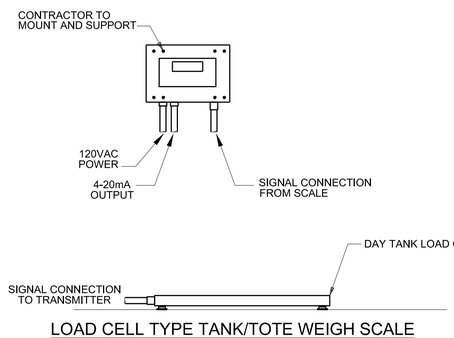

LOAD CELL TYPE TANK/TOTE WEIGH SCALE INSTALLATION DETAIL

NO SCALE

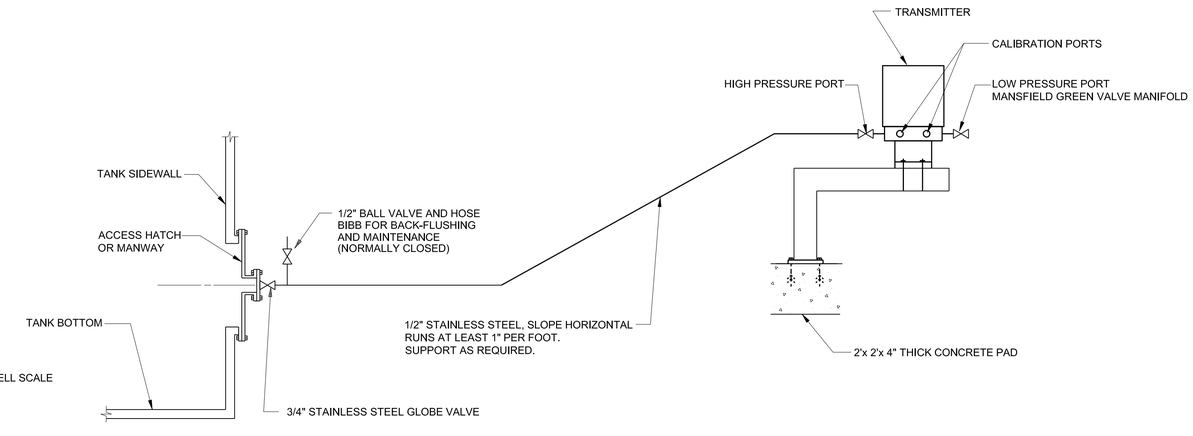

FLANGE MOUNTED PRESSURE SENSING LEVEL TRANSMITTER INSTALLATION DETAIL

NO SCALE

NO.	BY	CHK	APP	DATE	REVISIONS AND RECORD OF ISSUE
0	BLB	JSM	BLB	5/19/2020	ISSUED FOR CONSTRUCTION

REGISTERED PROFESSIONAL ENGINEER
BRIAN L. BUTLER
No. E 16569
Exp. 03/31/20
ELECTRICAL
STATE OF CALIFORNIA

BLACK & VEATCH
JOINT VENTURE
BLACK & VEATCH
FILANC

CITY OF MORRO BAY
MORRO BAY WATER
RECLAMATION FACILITY (WRF)

INSTALLATION DETAIL 3

DESIGNED: BLB
DETAILED: PVR, VM
CHECKED: JSM, BDS
APPROVED: BLB
DATE: 5/19/2020

0 1/2 1
IF THIS BAR DOES NOT MEASURE 1" THEN DRAWING IS NOT TO FULL SCALE

PROJECT NO.
400530

00-I-503
SHEET
91 OF 412

RAN84017, 13-03-2020 09:31:05
GAW78494, 22-03-18 12:25:00 PM
RAN84017

D400530

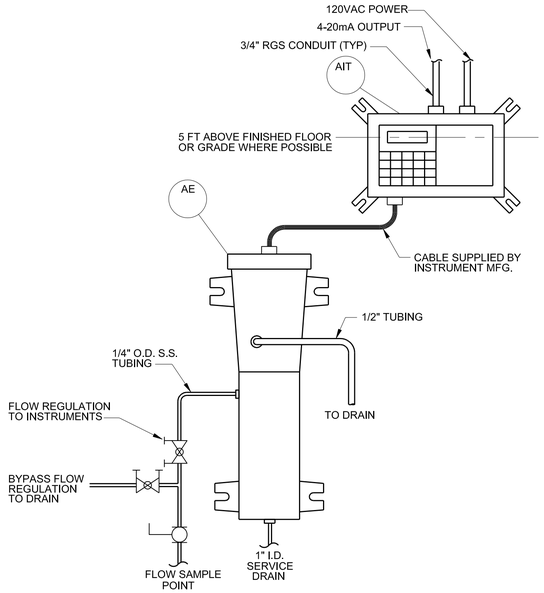

TURBIDITY METER
INSTALLATION DETAIL
NO SCALE

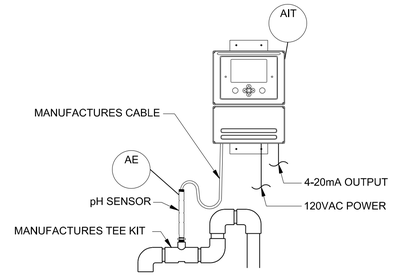

pH SENSOR
INSTALLATION DETAIL
NO SCALE

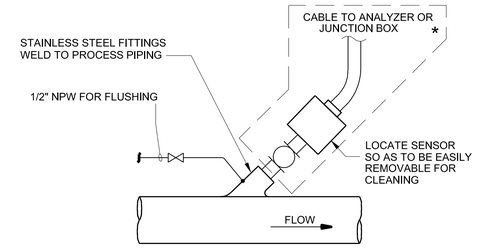

TSS PROBE
INSTALLATION DETAIL
NO SCALE
CONTRACTOR TO COORDINATE PIPE FITTING WITH
HOT TAP ASSEMBLY PROVIDED WITH INSTRUMENT.

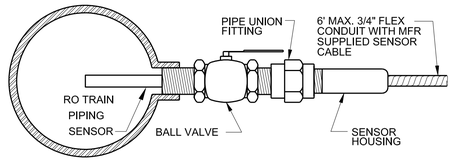

PH, ORP, CONDUCTIVITY SENSOR (INLINE TYPE)
INSTALLATION DETAIL
NO SCALE

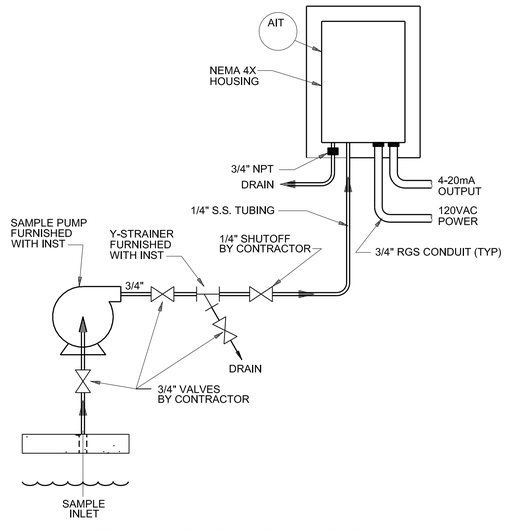

RESIDUAL CHLORINE ANALYZER
INSTALLATION DETAIL
NO SCALE

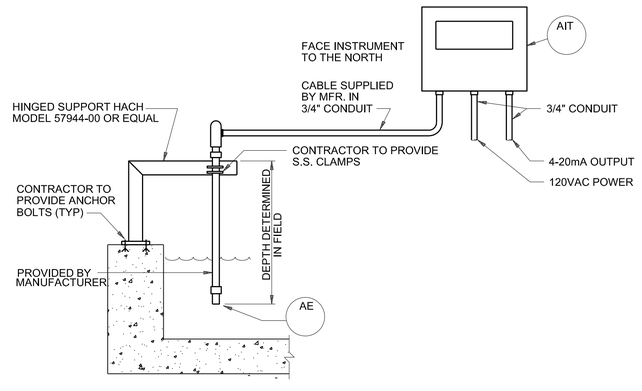

AERATION BASIN MLSS, ORP, & NITRATE
INSTALLATION DETAIL
NO SCALE

NO.	BY	CHK	APP	DATE	REVISIONS AND RECORD OF USE
0	BLB	JSM	BLB	5/19/2020	ISSUED FOR CONSTRUCTION

REGISTERED PROFESSIONAL ENGINEER
BRIAN L. BUTLER
No. E 16569
Exp. 03/31/20
ELECTRICAL
STATE OF CALIFORNIA

BLACK & VEATCH
JOINT VENTURE
BLACK & VEATCH
FILANC

CITY OF MORRO BAY
MORRO BAY WATER
RECLAMATION FACILITY (WRF)

INSTALLATION DETAIL 4

DESIGNED: BLB
DETAILED: PVR, VM
CHECKED: JSM, BDS
APPROVED: BLB
DATE: 5/19/2020

0 1/2 1
IF THIS BAR DOES NOT MEASURE 1" THEN DRAWING IS NOT TO FULL SCALE

PROJECT NO.
400530

00-I-504
SHEET
92 OF 412

RAN84017, 13-03-2020 09:29:46
GAW78494, 22-03-18 12:25:00 PM
RAN84017

D400530

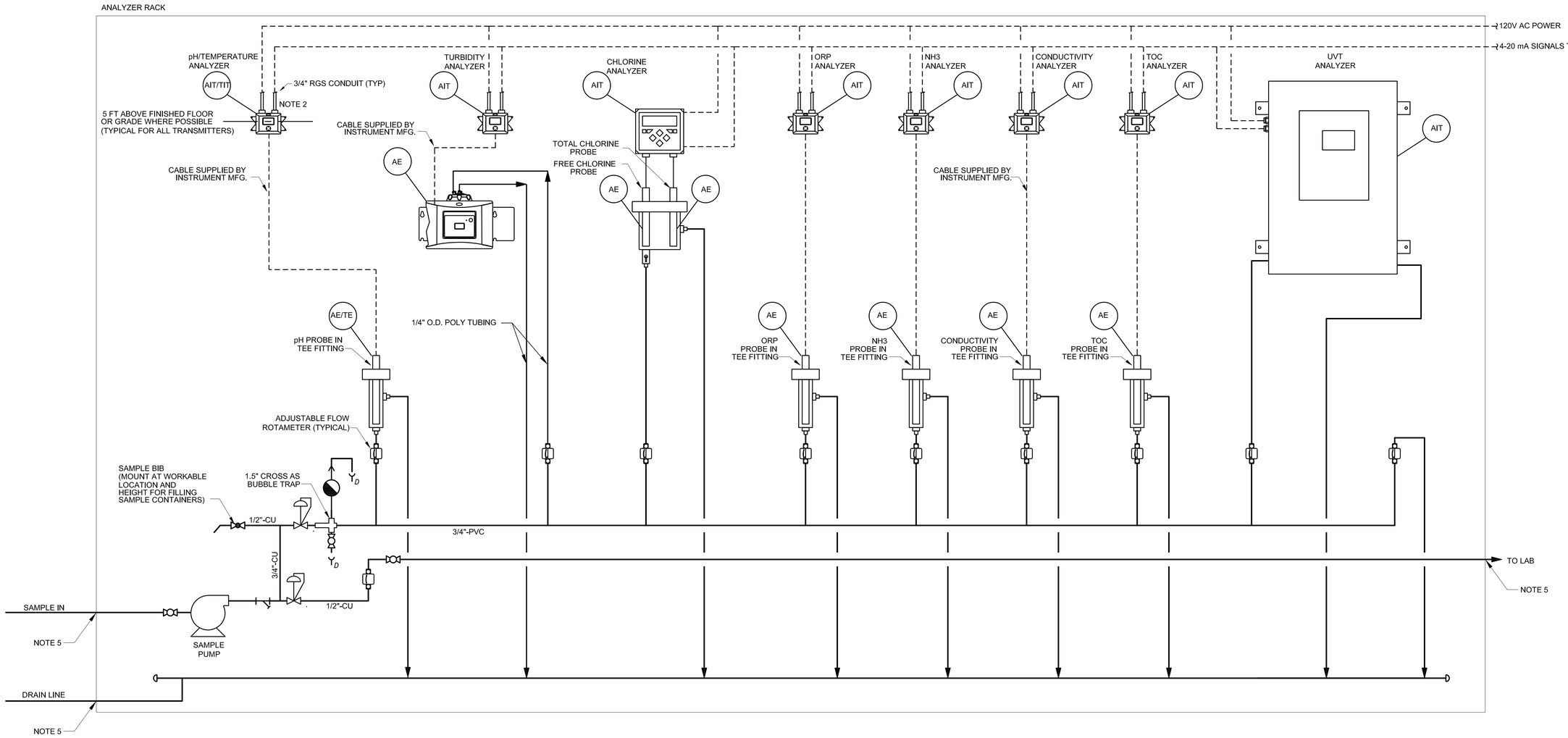

ANALYZER PANEL NAME	pH	ORP	NH3	TURBIDITY	FREE CHLORINE	CONDUCTIVITY	UVT	TOC	PUMP	NOTES
MBR BASIN 1 FILTRATE ANALYZER PANEL				32-MEM-AIT-1001					32-MEM-P-0001	
MBR BASIN 2 FILTRATE ANALYZER PANEL				32-MEM-AIT-2001					32-MEM-P-0002	
MBR FILTRATE MANIFOLD ANALYZER PANEL NO.1			32-MEM-AIT-0001							
MBR FILTRATE MANIFOLD ANALYZER PANEL NO.2				32-MEM-AIT-0001					32-MEM-P-0003	
RO FEED ANALYZER PANEL	51-RO-AIT-0006	51-RO-AIT-0003	51-RO-AIT-0005	51-RO-AIT-0002	51-RO-AIT-0004	51-RO-AIT-0001		51-RO-AIT-0007		
RO UNIT OUTLET TOC ANALYZER PANEL								52-UV-AIT-0001		
UV REACTOR INFLUENT ANALYZER PANEL	52-UV-AIT-0002				52-UV-AIT-0004		52-UV-AIT-0005			
UV REACTOR EFFLUENT ANALYZER PANEL	52-UV-AIT-0007									
PRODUCT WATER FIT ANALYZER PANEL	63-TW-AIT-0003				63-TW-AIT-0001	63-TW-AIT-0002				
DECHLORINATION ANALYZER PANEL					65-TW-AIT-0001					

NOTES:

1. ASSOCIATED FITTINGS AND TUBING ARE NOT NECESSARY IF ANALYZER OR PUMP IS NOT INCLUDED IN TABLE.
2. REPRESENTS TWO 4-20 mA SIGNALS. ONE FOR pH AND ONE FOR TEMPERATURE.
3. INSTRUMENT AIR MUST BE DRY AND OIL AND DUST FREE.
4. DETAILED DRAWINGS SHALL BE SUBMITTED FOR REVIEW AND APPROVAL PRIOR TO FABRICATION.
5. FIELD PIPING/TUBING CONNECTIONS ARE MADE WITH A FITTING ON EDGE OF THE PANEL.

NO.	BY	CHK	APP	DATE	REVISIONS AND RECORD OF USE
0	BLB	JSM	BLB	5/19/2020	ISSUED FOR CONSTRUCTION

REGISTERED PROFESSIONAL ENGINEER
BRIAN L. BUTLER
No. E 16569
Exp. 03/31/20
ELECTRICAL
STATE OF CALIFORNIA

BLACK & VEATCH
JOINT VENTURE
BLACK & VEATCH
FILANC

CITY OF MORRO BAY
MORRO BAY WATER RECLAMATION FACILITY (WRF)

INSTRUMENTATION
WATER QUALITY STATION DETAIL

DESIGNED: BLB
DETAILED: PVR, VM
CHECKED: JSM, BDS
APPROVED: BLB
DATE: 5/19/2020

0 1/2 1
IF THIS BAR DOES NOT MEASURE 1" THEN DRAWING IS NOT TO FULL SCALE

PROJECT NO.
400530

00-I-505
SHEET
93 OF 412

RAN64017, 13-03-2020 15:52:45
DON52458, 2/18/2020 10:25:56 AM
R4N64017

D400530

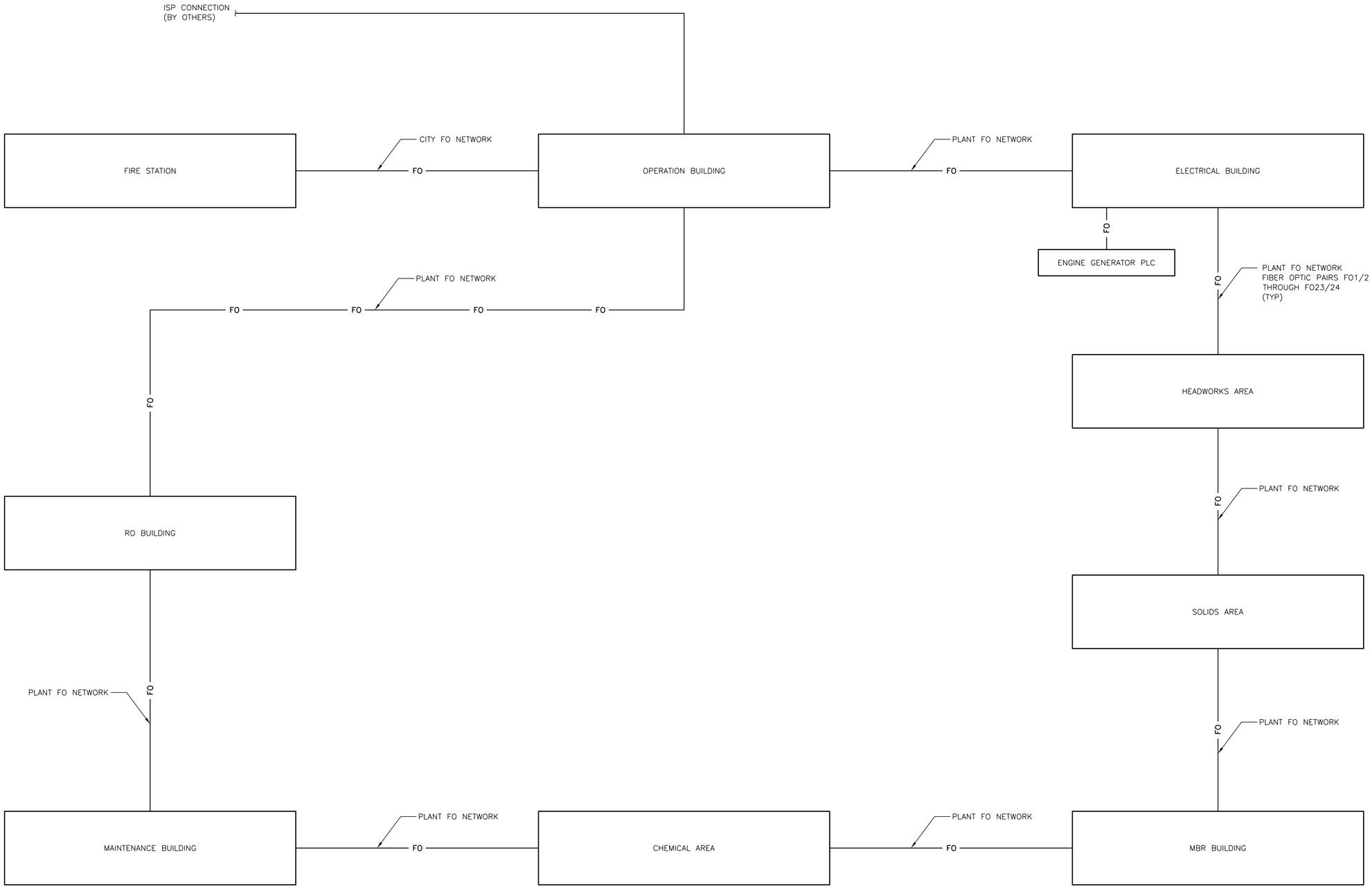

NO.	BY	CHK	APP
0	BLB	JMS	BLB

REVISIONS AND RECORD OF USE

ISSUED FOR CONSTRUCTION

5/19/2020
DATE

REGISTERED PROFESSIONAL ENGINEER
BRIAN L. BUTLER
No. E 16569
Exp. 03/31/20
ELECTRICAL
STATE OF CALIFORNIA

BLACK & VEATCH

JOINT VENTURE

FILANC

BLACK & VEATCH

CITY OF MORRO BAY
MORRO BAY WATER
RECLAMATION FACILITY (WRF)

OVERALL FIBER OPTIC NETWORK DIAGRAM

DESIGNED: BLB
DETAILED: PVR, VM
CHECKED: JSM, BDS
APPROVED: BLB
DATE: 5/19/2020

0 1/2 1
IF THIS BAR DOES NOT MEASURE 1" THEN DRAWING IS NOT TO FULL SCALE

PROJECT NO.
400530

00-I-701
SHEET
94 OF 412

RAN84017, 13-03-2020 09:25:59
GAW78494, 10/10/2019 12:05:16 PM
RAN84017

D400530

95-CTRL-SVR-0001 WITH 19" FULL SERVER RACK - IN SERVER RM

HISTORIAN SERVER 90-CTRL-SRVR-0004

KEYBOARD, MONITOR, MOUSE (KMM) (TYPCAL)

90-CTRL-UPS-0002

REDUNDANT SERVERS HOSTING SCADA AND I/O SERVERS

90-CTRL-SRVR-0001

90-CTRL-SRVR-0002

TERMINAL, ACTIVE DIRECTORY, ANTI-MALWARE AND MICROSOFT UPDATE SERVER 90-CTRL-SRVR-0003

CMMS SERVER WITH CMMS SOFTWARE, DATABASE, AND FULL INTEGRATION WITH THE SCADA 2 X 32" SCREENS 90-CTRL-HMI-0002

90-CTRL-UPS-0001

OPERATOR HMI 2 X 32" SCREENS 90-CTRL-HMI-0001

ENGINEERING HMI 2 X 32" SCREENS 90-CTRL-HMI-0003

LASER PRINTER 90-CTRL-PRTR-0001

ISP CONNECTION

VPN APPLIANCE / FIREWALL

ROUTER 90-CTRL-RTR-0002

90-CTRL-FRWL-0003

90-CTRL-ES-0002

90-CTRL-FRWL-0002

90-CTRL-FRWL-0001 FIREWALL (TYPICAL)

ADMIN NETWORK SW*24 PORTS 90-CTRL-ES-0003 LAYER 3

DMZ SWITCH LAYER 2

90-CTRL-ES-0001 ETHERNET SW (TYPICAL)

LAYER 3

4-CAT6

3-CAT6

2-CAT6

CONTROL ROOM

SINGLE MODE

TO EXTERNAL CONNECTIONS PUMP STATION OPERATION BUILDING WTP WWTP

FPP

90-CTRL-FPP-0002

VPN APPLIANCE / FIREWALL

90-CTRL-RTR-0001 DMZ NETWORK

90-CTRL-HMI-0004 PCS HMI LAPTOP FOR REMOTE ACCESS

SCADA ROUTER

90-CTRL-FPP-0001

80-ELEC-SWB-0001

80-ELEC-MCC-0001

80-ELEC-MCC-0002

POWER MONITOR

TABLET PC'S BY CITY. 2 TOTAL WITH HMI SOFTWARE 90-CTRL-HMI-0004 & 90-CTRL-HMI-0005

FIBER OPTIC PAIRS FO1/2 THROUGH FO23/24

90-CTRL-FPP-0003

90-CTRL-ES-0005

90-CTRL-ES-0004

OFFSITE FILE STORAGE SERVER 90-CTRL-SRVR-0007

REDUNDANT SCADA HISTORIAN 90-CTRL-SRVR-0005

SCADA TERMINAL SERVER 90-CTRL-SRVR-0006

FIRE STATION (NOTE 2)

TO CITY ADMIN NETWORK

TO PUMP STATIONS AND WWTP

NOTE 4

PRIMARY MODICON-PLC

SECONDARY MODICON-PLC

80-CTRL-PLC-0101

80-CTRL-PLC-0201

PLANT PLC IN ELECTRICAL BUILDING (NOTE 5) 80-CTRL-LCP-0001

OPERATOR HMI 1 X 24" SCREEN

NOTE 1 (TYP OF 2)

24 STRAND 50 MICRON FIBER OPTIC CABLE (TYPICAL)

FIBER OPTIC PAIR FO1/2 (TYPICAL FOR ALL)

FIBER PAIR	NETWORK ASSIGNMENT
FO1/2	SERVERs, PLCs AND WAPs
FO3/4	PLCs AND RIO
FO5/6	ADMINISTRATIVE PCs
FO7/8	SECURITY
FO9/10	CCTV
FO11/12	SPARE
FO13/14	SPARE
FO15/16	SPARE
FO17/18	SPARE
FO19/20	SPARE
FO21/22	SPARE
FO23/24	SPARE

FIBER OPTIC PAIRS FO1/2 AND FO3/4 (TYPICAL FOR LOOP)

51-CTRL-FPP-0001

50-ELEC-MCC-0001

51-CTRL-HMI-0001

51-CTRL-RIO-0001

51-CTRL-ES-0001

RO AREA RIO PANEL 51-CTRL-LCP-0001

51-CTRL-UPS-0001

OPERATOR HMI 1 X 24" SCREEN

96-CTRL-FPP-0001

MAINTENANCE BUILDING 96-ADMIN-LCP-0001

90-CTRL-FPP-0001

90-CTRL-RIO-0001

CHEM AREA RIO PANEL 90-CTRL-LCP-0001

31-CTRL-FPP-0001

31-CTRL-RIO-0001

31-CTRL-ES-0001

MBR AREA RIO PANEL 31-CTRL-LCP-0001

31-CTRL-UPS-0001

72-CTRL-FPP-0001

72-CTRL-RIO-0001

72-CTRL-ES-0001

SOLIDS AREA RIO PANEL 72-CTRL-LCP-0001

72-CTRL-UPS-0001

21-CTRL-FPP-0001

21-CTRL-RIO-0001

21-CTRL-ES-0001

HW AREA RIO PANEL 21-CTRL-LCP-0001

21-CTRL-UPS-0001

21-SCR-ES-2001

81-GEN-FPP-0001

81-GEN-ES-0001

81-GEN-PLC-0002

VENDOR GEN LCP 81-GEN-LCP-0001

81-GEN-UPS-0001

81-GEN-OIT-0001

51-RO-RIO-0101

51-RO-PLC-0001

VENDOR RO LCP 51-RO-LCP-0001

51-RO-LCP-0101 (51-RO-RIO-0101)

51-RO-RIO-0201

51-RO-LCP-0201 (51-RO-RIO-0201)

51-RO-RIO-0301

51-RO-LCP-0301 (51-RO-RIO-0301)

52-UV-RIO-0101

52-UV-PLC-0001

VENDOR UV LCP 52-UV-LCP-0001

52-UV-LCP-0101 (52-UV-RIO-0101)

32-MBR-ES-0001

32-MBR-PLC-0001

VENDOR MBR LCP 32-MBR-LCP-0001

32-MBR-UPS-0001

32-MBR-OIT-0001

72-DWT-ES-0001

72-DWT-PLC-0001

VENDOR BELT FILTER PRESS LCP 72-DWT-LCP-0001

72-DWT-UPS-0001

72-DWT-OIT-0001

73-FSW-ES-0001

73-FSW-PLC-0001

VENDOR DISK FILTER LCP 73-FSW-LCP-0001

73-FSW-UPS-0001

73-FSW-OIT-0001

21-SCR-ES-1001

21-SCR-PLC-1001

VENDOR BAR SCREEN 1 LCP 21-SCR-LCP-1001

21-SCR-UPS-1001

21-SCR-OIT-1001

21-SCR-PLC-2001

VENDOR BAR SCREEN 2 LCP 21-SCR-LCP-2001

21-SCR-UPS-2001

21-SCR-OIT-2001

NOTE 6

LAYER 2

LAYER 3

FPP

UPS

NOTES:

1. ALL OPERATOR HMI'S AND WIRELESS ACCESS POINTS ARE ON THE SCADA NETWORK.
2. ALL EQUIPMENT LOCATED IN FIRE STATION TO BE SUPPLIED BY THE CITY.
3. SCADA AND I/O SERVERS CONNECTED TO BOTH SCADA AND PLANT CONTROL NETWORKS.
4. FIBER RING CONSISTS OF 24 STRANDS TOTAL. 2 STRANDS FOR PCS NETWORK, 2 STRANDS FOR RIO NETWORK, 2 STRANDS FOR ADMINISTRATIVE NETWORK, 2 STRANDS FOR SECURITY NETWORK, 2 STRANDS FOR CCTV AND 14 SPARE STRANDS.
5. DUAL PLCS IN A REDUNDANT CONFIGURATION.
6. VENDOR PACKAGED SYSTEM PROVIDED WITH REDUNDANT PLC CPUs.

NO.	BY	CHK	APP
0	BLB	JSM	BLB

DATE	REVISIONS AND RECORD OF USE
5/19/2020	ISSUED FOR CONSTRUCTION

REGISTERED PROFESSIONAL ENGINEER BRIAN L. BUTLER No. E 16569 Exp. 03/31/20 ELECTRICAL STATE OF CALIFORNIA

BLACK & VEATCH JOINT VENTURE

BLACK & VEATCH FILANC

CITY OF MORRO BAY
MORRO BAY WATER RECLAMATION FACILITY (WRF)

PLANT CONTROL SYSTEM NETWORK DIAGRAM

DESIGNED: BLB
DETAILED: PVR, VM
CHECKED: JSM, BDS
APPROVED: BLB
DATE: 5/19/2020

0 1/2 1

IF THIS BAR DOES NOT MEASURE 1" THEN DRAWING IS NOT TO FULL SCALE

PROJECT NO. 400530

00-I-702
SHEET 95 OF 412

RAN64017, 13-03-2020 09:23:53
MAL79137, 10/31/2019 4:50:05 PM
RAN64017

D400530

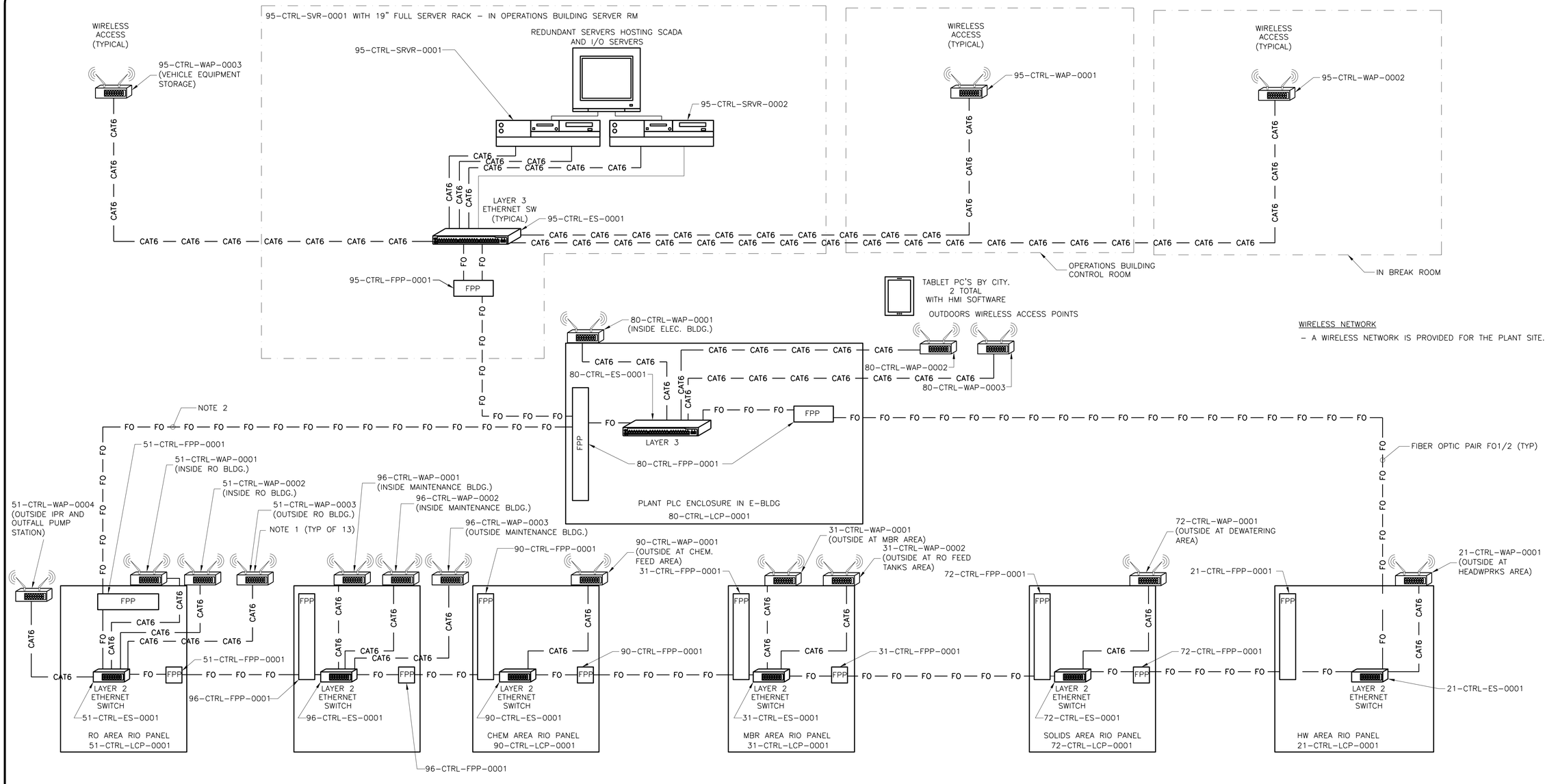

WIRELESS NETWORK

– A WIRELESS NETWORK IS PROVIDED FOR THE PLANT SITE.

LEGEND:

HMI – HUMAN-MACHINE INTERFACE

PLC – PROGRAMMABLE LOGIC CONTROLLER

ES – ETHERNET SWITCH

WAP – WIRELESS ACCESS POINT

TO 00-I-003 EQUIPMENT CODES

NOTES:

1. ALL WIRELESS ACCESS POINTS ARE ON THE SCADA NETWORK.
2. FIBER RING CONSISTS OF 6 STRANDS TOTAL. 2 STRANDS FOR SCADA NETWORK, 2 STRANDS FOR PLANT CONTROL NETWORK, AND 2 SPARE STRANDS.
3. FIBER RING CONSISTS OF 24 STRANDS TOTAL. 2 STRANDS FOR PCS NETWORK, 2 STRANDS FOR RIO NETWORK, 2 STRANDS FOR ADMINISTRATIVE NETWORK, 2 STRANDS FOR SECURITY NETWORK, 2 STRANDS FOR CCTV AND 14 SPARE STRANDS.

NO.	BY	CHK	APP
0	BLB	JMS	BLB

REVISIONS AND RECORD OF USE

ISSUED FOR CONSTRUCTION

5/19/2020 DATE

REGISTERED PROFESSIONAL ENGINEER BRIAN L. BUTLER No. E 16569 Exp. 03/31/20 ELECTRICAL STATE OF CALIFORNIA

BLACK & VEATCH

JOINT VENTURE

BLACK & VEATCH

FILANC

CITY OF MORRO BAY
MORRO BAY WATER RECLAMATION FACILITY (WRF)

WIRELESS NETWORK DIAGRAM

DESIGNED: BLB
DETAILED: PVR, VM
CHECKED: JMS, BDS
APPROVED: BLB
DATE: 5/19/2020

0 1/2 1
IF THIS BAR DOES NOT MEASURE 1" THEN DRAWING IS NOT TO FULL SCALE

PROJECT NO. 400530

00-I-703
SHEET 96 OF 412

RAN64017, 13-03-2020 09:22:06
GAW78484, 22-03-18 12:25:00 PM
RAN64017

D400530

TELEPHONE TERMINAL BOX AND BURIED TELEPHONE LINE (PROVIDED BY TELEPHONE COMPANY)

TO OFFSITE TELEPHONE SYSTEM

FO

TELEPHONE TERMINAL BOARD AND TELEPHONE COMPANY ROUTER
95-ELEC-TTB-0001

INTERNET TERMINAL BOX AND BURIED INTERNET LINE (PROVIDED BY INTERNET PROVIDER)

TO OFFSITE INTERNET SYSTEM

FO OR CAT6 (AS REQUIRED BY SERVICE PROVIDER)

FO OR CAT6 (AS REQUIRED BY SERVICE PROVIDER)

FIBER OPTIC PAIR FO5/6

ADMINISTRATIVE NETWORK SERVER RACK
95-ADMIN-SVR-0001

PLANT CONTROL SYSTEM NETWORK SERVER RACK
95-CTRL-SVR-0001

FO — FO — FO — FO — TO ELECTRICAL BLDG.

ELECTRICAL SERVER ROOM

5 CAT6

CAT6 — CAT6 — CAT6

4 CAT6

4 CAT6

OFFICE 4

CAT6 — CAT6 — CAT6

FIRE ALARM CONTROL PANEL 95-ELEC-FP-0001 TELEPHONE CONNECTIONS

CAT6

LOBBY

CAT6

MANAGER OFFICE

FIBER OPTIC PAIRS FO1/2 (TYPICAL FOR LOOP)

4 CAT6

8 CAT6

CAT6

CONFERENCE ROOM

OFFICE 2

OFFICE 3

OFFICE 5

MAP ROOM

CONTROL ROOM

CAT6 — CAT6 — CAT6 — CAT6 — CAT6

OPERATIONS BUILDING

FIBER OPTIC CABLE FOR THE REDUNDANT PROGRAMMABLE LOGIC CONTROLLER (PLC) TO REMOTE INPUT/OUTPUT (RIO) UNITS NETWORK

TO/FROM ELECTRICAL BLDG. VIA CHEM. FEED, MBR, SOLIDS HANDING AND HEADWORKS CTRL LOCAL CONTROL PANELS

FIBER OPTIC PAIRS FO3/4 (TYPICAL FOR LOOP)

FIBER OPTIC CABLE FOR THE PHYSICALLY ISOLATED PLANT CONTROL SYSTEM (PCS) AND ADMINISTRATIVE NEWTWORKS

FROM OPERATIONS BLDG. ELECTRICAL SERVER ROOM

FIBER OPTIC CABLE FOR THE OPTICALLY ISOLATED PLANT CONTROL SYSTEM (PCS) AND ADMINISTRATIVE NETWORKS

RO/UV BUILDING

ELECTRICAL BUILDING

FOR OPERATOR HMI

FOR OPERATOR HMI

CAT6

CAT6

FIBER OPTIC PAIRS FO1/2

FIBER OPTIC PAIR FO5/6

FIBER OPTIC PAIRS FO3/4

51-CTRL-LCP-0001 (FIBER PATCH PANEL AND ETHERNET SWITCH)

80-CTRL-LCP-0001 (FIBER PATCH PANEL AND ETHERNET SWITCH)

FIBER OPTIC PAIRS FO1/2

FIBER OPTIC PAIR FO5/6

FIBER OPTIC PAIR FO5/6 FOR THE ADMINISTRATIVE NETWORK (TYPICAL)

CAT6 — CAT6

4 CAT6

96-ADMIN-LCP-0001 (FIBER PATCH PANEL AND ETHERNET SWITCH)

CAT6 — CAT6

I&C WORKSHOP

CONTROL ROOM

MAINTENANCE BUILDING

LEGEND

ADMINISTRATIVE NETWORK OUTLET

PLANT CONTROL SYSTEM (PCS) NETWORK OUTLET

TELEPHONE FLOOR OUTLET

TELEPHONE OUTLET

NO.	BY	CHK	APP	DATE	REVISIONS AND RECORD OF USE
0	BLB	JSM	BLB	5/19/2020	ISSUED FOR CONSTRUCTION

REGISTERED PROFESSIONAL ENGINEER BRIAN L. BUTLER No. E 16569 Exp. 03/31/20 ELECTRICAL STATE OF CALIFORNIA

BLACK & VEATCH

JOINT VENTURE

BLACK & VEATCH

FILANC

CITY OF MORRO BAY
MORRO BAY WATER RECLAMATION FACILITY (WRF)

OFFICE NETWORK AND TELEPHONE SYSTEM DIAGRAM

DESIGNED: BLB
DETAILED: PVR, VM
CHECKED: JSM, BDS
APPROVED: BLB
DATE: 5/19/2020

0 1/2 1

IF THIS BAR DOES NOT MEASURE 1" THEN DRAWING IS NOT TO FULL SCALE

PROJECT NO. 400530

00-I-704

SHEET 97 OF 412

RAN64017, 13:03:2020 09:20:41
GAM78494, 10/10/2019 12:05:16 PM
RAN64017

D400530

OPERATIONS BUILDING

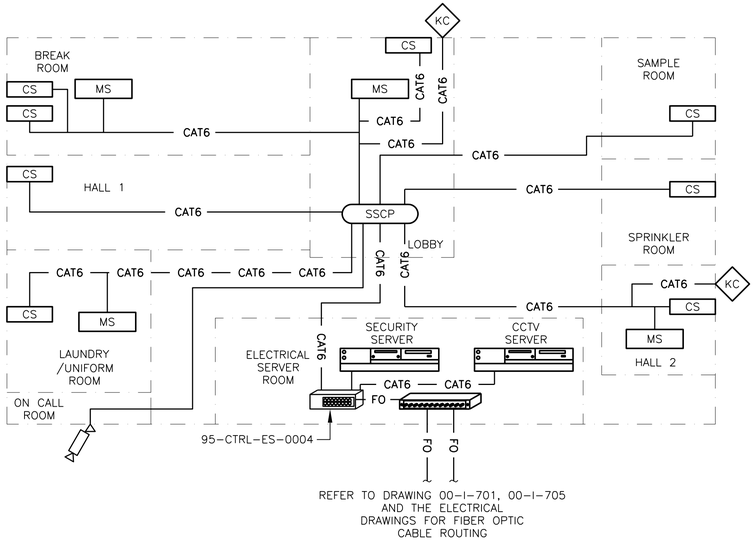

MAINTENANCE BUILDING

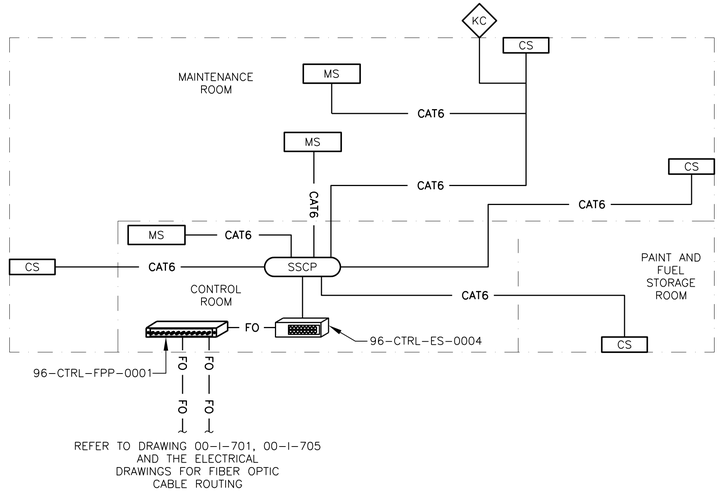

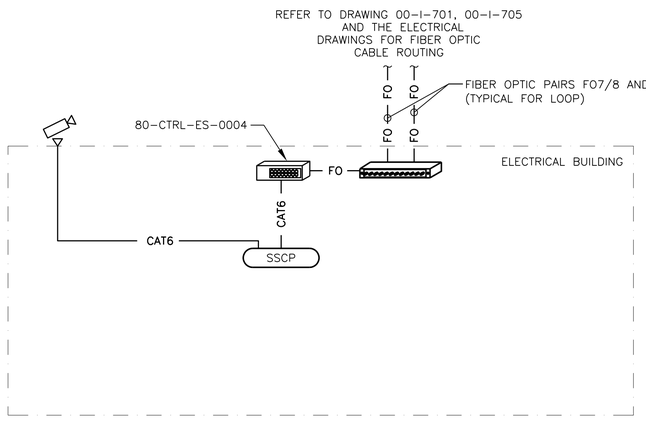

ELECTRICAL BUILDING

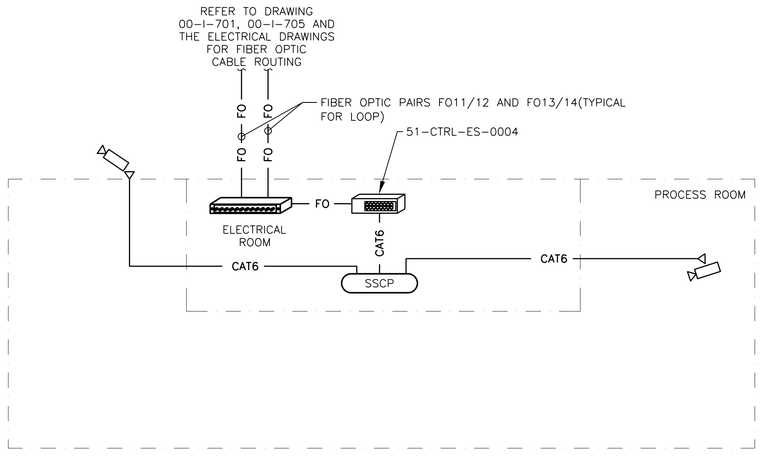

RO/UV BUILDING

LEGEND:

SSCP	SECURITY SYSTEM CONTROL PANEL
MS	MOTION SENSOR
CS	CONTACT SWITCH (DOOR)
KC	CARD READER
	INDUSTRIAL ETHERNET SWITCH
	FIBER PATCH PANEL
	CLOSED CIRCUIT TELEVISION CAMERA (CCTV)
△	CCTV NETWORK OUTLET
	SERVER

NO.	BY	CHK	APP
0	BLB	JSM	BLB

REVISIONS AND RECORD OF USE

ISSUED FOR CONSTRUCTION — 5/19/2020

REGISTERED PROFESSIONAL ENGINEER — BRIAN L. BUTLER — No. E 16569 — Exp. 03/31/20 — ELECTRICAL — STATE OF CALIFORNIA

BLACK & VEATCH

JOINT VENTURE

BLACK & VEATCH

FILANC

CITY OF MORRO BAY
MORRO BAY WATER
RECLAMATION FACILITY (WRF)

SECURITY SYSTEM DIAGRAM

DESIGNED: BLB
DETAILED: PVR, VM
CHECKED: JSM, BDS
APPROVED: BLB
DATE: 5/19/2020

0 1/2 1
IF THIS BAR DOES NOT MEASURE 1" THEN DRAWING IS NOT TO FULL SCALE

PROJECT NO.
400530

00-I-705
SHEET
98 OF 412

RAN84017, 13-03-2020 09:15:58
GAW78494, 10/10/2019 12:05:16 PM
RAN84017

D400530

PCS HMI

21-CTRL-RIO-0001

FLOW FI 0101 | FLOW FI 0201 | START TRAIN 1 UCR 0001 | STOP TRAIN 1 UCS 0001 | FAIL YA 0001 | HI LEVEL LAH 0001 | IN AUTO YI 0001 | ESTOP YA 0001 | RUNNING YIR 0001 | LOW SPEED YIR 0001 | HIGH SPEED YIR 0001 | SPEED RESET CMD SRC 0001

IN REMOTE YI 1001 | OPENED ZIO 1001 | CLOSED ZIC 1001 | OPEN CMD ZCO 1001 | CLOSE CMD ZCC 1001

IN REMOTE YI 2001 | OPENED ZIO 2001 | CLOSED ZIC 2001 | OPEN CMD ZCO 2001 | CLOSE CMD ZCC 2001

BAR SCREEN CONTROL SYSTEM PANEL
21-SCR-LCP-1001 (21-SCR-PLC-1001)
(WITH LOCAL STARTERS/DRIVES)

QIK RESET TIMER | QIK AUTO HIGH SPD DELAY TIMER | SK MANUAL SPEED CONTROLLER | QIK 24 HR PROGRAM TIMER | YL FWD | SK LOW SPEED SETPOINT | SK HIGH SPEED SETPOINT | HMS SPEED RESET | YL REV | SI SPEED INDICATION | LIK HIGH DIFF SETPOINT | LAH | YA | YA FR HS FR HS TAH OOA | SI | HMS | SK | HMS RESET | JL

BAR SCREEN NO. 1 CONTROLS

HS OCA | YA FAIL | YL OFF | SPRAY WATER | YL FWD | YL REV | HS FR | HS OOA | PAL

WASHER COMPACTOR NO. 1 CONTROLS

480V

VALVE ACTUATOR: HS 1001 LOR | HS 1001 OSC | ZLC 1001 | ZLO 1001 | ZSC 1001 | ZSO 1001 — 480V

VALVE ACTUATOR: HS 1001 LOR | HS 1001 OSC | ZLC 1001 | ZLO 1001 | ZSC 1001 | ZSO 1001 — 480V

VALVE ACTUATOR: HS 2001 LOR | HS 2001 OSC | ZLC 2001 | ZLO 2001 | ZSC 2001 | ZSO 2001 — 480V

ZY 95-I-001 FROM SANITARY LIFT STATION — 6"-SAN-HDPE

24V — US — LDIT 1001 | LDSH 1001

E-STOP HS

PACKAGED HEADWORKS NO. 1
(COARSE SCREEN AND WASHER COMPACTOR, BYPASS CHANNEL,VORTEX GRIT AND GRIT SEPARATOR/CLASSIFIER)

18" X 12" REDUCING ELBOW — FIT 0101 — 24V — FE 0101 — 12"-WWR-HDPE — 18"-WWR-HDPE INFLUENT MAIN — M 12" — 16"-WWR-DIP — 24"-WWR-DIP — SCR-V-0101 — SCR-V-0102 — 16" X 12" EXPANDING ELBOW — SCR-V-1001

AA 21-I-001 TO GRIT REMOVAL COARSE SCREENS BYPASS CHANNEL

LE 1001A — US — LSHH 1001 — OSH 1001

OPEN BASIN CONNECTION - NOT PIPE

ZS 1101 | ZS 1201 — LE 1001B — US

COARSE SCREEN NO. 1
SCR-SCR-1001

CHANNEL

SCR-V-1002 — TO PLANT DRAIN — 4"-WWS-DIP

1"-PRW-PVC-02 — PSL 1001 — A — SCR-V-0010 — SCR-V-1008

WASHER COMPACTOR SCR-WCMP-1001

SYSTEM CODE = GRT — HS OO — OPEN BASIN CONNECTION - NOT PIPE

AA 21-I-001 FROM COARSE SCREEN BYPASS CHANNEL

24"-WWS-DIP — M — 18"-WWS-DIP — AE 22-I-001 TO SAFE BOX

GRT-V-1001

GRIT COLLECTOR NO. 1
GRT-GRB-1001

AD 21-I-001 FROM SEPARATOR / CLASSIFIER DRAIN NO. 1 — 3"-WWS-DIP

SYSTEM CODE = GRT — HS OOR

4"-WWS-DIP — 4"-FA-PVC-01

PG 1001 — 4"-WWS-DIP — GRT-V-1003

GRT-V-1002 — FLUSH PORT — GRIT PUMP NO. 1
GRT-P-1001

PSL 1001 — SYSTEM CODE = PRW — SYSTEM CODE = GRT

PRW-V-1005 — C — PRW-V-1006

4"-FA-PVC-01 — AC 23-I-001 TO ODOR CONTROL — NOTE 7

VENT — NPW-V-1006 — D — NPW-V-1007

SEPARATOR CLASSIFIER
GRT-CGR-1001

GRT-V-1004

3"-WWS-DIP — AD 21-I-001 TO COARSE SCREENS NO. 1 EFFLUENT

14" X 8" REDUCING ELBOW — FIT 0201 — 24V — FE 0201 — 14"-WWR-HDPE INFLUENT MAIN — M 8" — 8"-WWR-DIP — SCR-V-0201 — SCR-V-0202 — 12"-WWR-DIP — 12" X 8" EXPANDING ELBOW — SCR-V-2001 — 24"-WWR-DIP — AB 21-I-002 TO PACKAGED HEADWORKS NO. 2

CONVEYOR SCR-COS-1001

6"-SAN-HDPE — ZZ 95-I-001 FROM SANITARY LIFT STATION

HA 34-I-001 FROM RECYCLED WATER PUMPS — 2"-PRW-PVC-02

TO HEADWORKS HOSE BIBB — A | B | C | D — PWR CONNECTIONS ON THIS SHEET

2"-PRW-PVC-02 — AJ 21-I-002 TO PACKAGED HEADWORKS NO. 2

B — 2"-PRW-PVC-02 — PRW-V-1001 — PRW-V-1002 — PRW-V-1003 — PRW-V-1004

PACKAGED HEADWORKS NO.1 SKID

NOTES:

1. SEE LEGEND AND ABBREVIATIONS ON DRAWING 00-I-001, 00-I-002 AND 00-I-003.
2. AREA CODE IS 21 UNLESS OTHERWISE NOTED. SYSTEM CODE IS SCR UNLESS OTHERWISE NOTED.
3. LOCAL CONTROL DEVICES SUCH AS INDICATING LIGHTS AND SWITCHES, LOCATED IN MCC's OR AT DRIVEN EQUIPMENT MAY NOT INDICATED ON THIS P&ID.
4. FOR DRAWING CLARITY, VALVE TAG NUMBER ONLY SHOW THE SEQUENCE NUMBER UNLESS OTHERWISE NOTED.
5. SEE THE SEAL WATER SYSTEM DETAILS IN THE SEAL WATER STATIONS SPECIFICATION FOR FURTHER SEAL WATER VALVE AND PIPING REQUIREMENTS.
6. FIELD INSTRUMENTATION POWER SHALL BE SUPPLIED BY ASSOCIATED CONTROL PANEL OR INDEPENDENT POWER SUPPLY.
7. SEE HVAC/ MECHANICAL SPECIFICATION FOR ADDITIONAL DETAILS ON ODOR CONTROL DUCTING

* ITEM FURNISHED BY PACKAGED HEADWORKS SUPPLIER.

NO.	BY	CHK	APP
0	BLB	JSM	BLB

REVISIONS AND RECORD OF USE

DATE: 5/19/2020 ISSUED FOR CONSTRUCTION

REGISTERED PROFESSIONAL ENGINEER — BRIAN L. BUTLER — No. E 16569 — ELECTRICAL — STATE OF CALIFORNIA

BLACK & VEATCH

JOINT VENTURE

FILANC — BLACK & VEATCH

CITY OF MORRO BAY
MORRO BAY WATER RECLAMATION FACILITY (WRF)

HEADWORKS AREA - HEADWORKS P&ID TRAIN 1

DESIGNED: BLB, TDE
DETAILED: PVR
CHECKED: JSM, BDS
APPROVED: BLB
DATE: 5/19/2020

0 1/2 1
IF THIS BAR DOES NOT MEASURE 1" THEN DRAWING IS NOT TO FULL SCALE

PROJECT NO. 400530

21-I-001
SHEET 99 OF 412

PLOTTED: 5/18/2020 4:12:34 PM
D400530

PCS HMI

START TRAIN 2 UCR 0002 | STOP TRAIN 2 UCS 0002 | FAIL YA 0002 | HI LEVEL LAH 0002 | IN AUTO YI 0002 | ESTOP YA 0002 | RUNNING YIR 0002 | LOW SPEED YIR 0002 | HIGH SPEED YIR 0002 | SPEED RESET CMD SRC 0002

21-CTRL-RIO-0001

START TRAIN 2 UCR 0002 | STOP TRAIN 2 UCS 0002 | FAIL YA 0002 | HI LEVEL LAH 0002 | IN AUTO YI 0002 | ESTOP YA 0002 | RUNNING YIR 0002 | LOW SPEED YIR 0002 | HIGH SPEED YIR 0002 | SPEED RESET CMD SRC 0002

PCS HMI

IN REMOTE YI 2001 | OPENED ZIO 2001 | CLOSED ZIC 2001 | OPEN CMD ZCO 2001 | CLOSE CMD ZCC 2001

21-CTRL-RIO-0001

IN REMOTE YI 2001 | OPENED ZIO 2001 | CLOSED ZIC 2001 | OPEN CMD ZCO 2001 | CLOSE CMD ZCC 2001

480V

PACKAGED HEADWORKS NO. 2
(COARSE SCREEN AND WASHER COMPACTOR,
BYPASS CHANNEL,
VORTEX GRIT AND GRIT SEPARATOR/CLASSIFIER)

QIK RESET TIMER | QIK AUTO HIGH SPD DELAY TIMER | SK MANUAL SPEED CONTROLLER | QIK 24 HR PROGRAM TIMER | HS OCA | YA FAIL | YL OFF

YL FWD | SK LOW SPEED SETPOINT | SK HIGH SPEED SETPOINT | HMS SPEED RESET | SPRAY WATER

YL REV | SI SPEED INDICATION | LIK HIGH DIFF SETPOINT | LAH

YL FWD | YL REV | HS FR | HS OOA | PAL

WASHER COMPACTOR NO. 2 CONTROLS

YA | YA | HS FR | HS OOA | TAH | SI | HMS | SK | HMS RESET | JL

BAR SCREEN NO. 2 CONTROLS

BAR SCREEN CONTROL SYSTEM PANEL
21-SCR-LCP-2001 (21-SCR-PLC-2001)
(WITH LOCAL STARTERS/DRIVES)

HS 2001 LOR | HS 2001 OSC | ZLC 2001 | ZLO 2001 | ZSC 2001 | ZSO 2001

480V

VALVE ACTUATOR

24V | LDIT 2001 | LDSH 2001

E-STOP HS

E-STOP HS

OPEN BASIN CONNECTION - NOT PIPE

AF 21-I-002
COARSE SCREEEN BYPASS CHANNEL TO GRIT REMOVAL

OSH 2001

LSHH 2001

1"-PRW-PVC-02 A

PSL 2001

SCR-V-2010

SCR-V-2008

S

SYSTEM CODE = GRT

HS OO

OPEN BASIN CONNECTION - NOT PIPE

AF 21-I-002
FROM COARSE SCREEN BYPASS CHANNEL

24"-WWR-DIP

AB 21-I-001
PACKAGED HEADWORKS NO. 2 INFLUENT

LE 2001A US

ZS 2101

ZS 2201

LE 2001B US

WASHER COMPACTOR SCR-WCMP-2001

24"-WWS-DIP

M

GRT-V-2001

18"-WWS-DIP

AG 22-I-001
TO SAFE BOX

CHANNEL

COARSE SCREEN NO. 2
SCR-SCR-2001

SCR-V-2002

TO PLANT DRAIN

4"-WWS-DIP

3"-WWS-DIP

AI 21-I-002
FROM SEPARATOR / CLASSIFIER DRAIN NO. 2

GRTI COLLECTOR NO. 2
GRT-GRB-2001

SYSTEM CODE = GRT

HS OOR

4"-WWS-DIP

4"-FA-PVC-01

CONVEYOR
SCR-COS-2001

AJ 21-I-001
FROM PACKAGED HEADWORKS NO. 1

2"-PRW-PVC-02

A
B
C
D

PWR CONNECTIONS ON THIS SHEET

4"-WWS-DIP

PG 2001

GRT-V-2003

4"-WWS-DIP

GRT-V-2002

FLUSH PORT

GRIT PUMP NO. 2
GRT-P-2001

PSL 2001

SYSTEM CODE = GRT

4"-FA-PVC-01

AH 23-I-001
TO ODOR CONTROL

NOTE 7

PRW-V-2003

PRW-V-2004

PRW-V-1205

PRW-V-1206

C

SYSTEM CODE =PRW

VENT

D

PRW-V-2006

4"-FA-PVC-01

PRW-V-2007

B 2"-PRW-PVC-02

PRW-V-2001

PRW-V-2002

M

PACKAGED HEADWORKS NO.2 SKID

SEPARATOR CLASSIFIER
GRT-CGR-2001

GRT-V-2004

3"-WWS-DIP

AI 21-I-002
TO COURSE SCREENS NO. 2 EFFLUENT

NOTES:

1. SEE LEGEND AND ABBREVIATIONS ON DRAWING 00-I-001, 00-I-002 AND 00-I-003.
2. AREA CODE IS 21 UNLESS OTHERWISE NOTED. SYSTEM CODE IS SCR UNLESS OTHERWISE NOTED.
3. LOCAL CONTROL DEVICES SUCH AS INDICATING LIGHTS AND SWITCHES, LOCATED IN MCC's OR AT DRIVEN EQUIPMENT MAY NOT INDICATED ON THIS P&ID.
4. FOR DRAWING CLARITY, VALVE TAG NUMBER ONLY SHOW THE SEQUENCE NUMBER UNLESS OTHERWISE NOTED.
5. SEE THE SEAL WATER SYSTEM DETAILS IN THE SEAL WATER STATIONS SPECIFICATION FOR FURTHER SEAL WATER VALVE AND PIPING REQUIREMENTS.
6. FIELD INSTRUMENTATION POWER SHALL BE SUPPLIED BY ASSOCIATED CONTROL PANEL OR INDEPENDENT POWER SUPPLY.
7. SEE HVAC/ MECHANICAL SPECIFICATION FOR ADDITIONAL DETAILS ON ODOR CONTROL DUCTING

* ITEM FURNISHED BY PACKAGED HEADWORKS SUPPLIER.

NO.	BY	CHK	APP'D
0	BLB	JSM	BLB

REVISIONS AND RECORD OF USE

DATE: 5/19/2020 ISSUED FOR CONSTRUCTION

REGISTERED PROFESSIONAL ENGINEER
BRIAN L. BUTLER
No. E 16569
ELECTRICAL
STATE OF CALIFORNIA

BLACK & VEATCH
JOINT VENTURE
BLACK & VEATCH
FILANC

CITY OF MORRO BAY
MORRO BAY WATER
RECLAMATION FACILITY (WRF)

HEADWORKS AREA - HEADWORKS
P&ID
TRAIN 2

DESIGNED: BLB, TDE
DETAILED: PVR
CHECKED: JSM, BDS
APPROVED: BLB
DATE: 5/19/2020

0 1/2 1
IF THIS BAR DOES NOT MEASURE 1" THEN DRAWING IS NOT TO FULL SCALE

PROJECT NO.
400530

21-I-002
SHEET
100 OF 412

PLOTTED: 5/18/2020 4:12:35 PM
D400530

TYPICAL I/O FOR MODULATING VALVE SRV-V-1001

PCS HMI

FLOW FI 0010 | TRBL FA 0010 | LEVEL LI 0001 | IN REMOTE YI 2001 | POSITION SETPT ZC 2001 | POSITION FEEDBACK ZI 2001 | CLOSED ZSC 2001 | OPENED ZSO 2001

FLOW FI 1001 | FLOW FI 2001 | RUN CMD UCR 2001 | IN AUTO YI 2001 | RUNNING FAST YIR 2001 | RUNNING SLOW YIR 2001 | TRBL FA 2001 | HI DIFF. RESSURE PDA 2001 | SPRAY WASH LOW PRESSURE PAL 2001

RUN CMD UCR 1001 | IN AUTO YI 1001 | RUNNING FAST YIR 1001 | RUNNING SLOW YIR 1001 | TRBL YA 1001 | HI DIFF. RESSURE PDA 1001 | SPRAY WASH LOW PRESSURE PAL 1001

IN REMOTE YI 1104 | OPENED ZIO 1104 | CLOSED ZIC 1104 | OPEN CMD ZCO 1104 | CLOSE CMD ZCC 1104

IN REMOTE YI 2003 | OPENED ZIO 2003 | CLOSED ZIC 2003 | OPEN CMD ZCO 2003 | CLOSE CMD ZCC 2003

ZERO SPEED SI 0001 | MOTOR OVLD YA 0001 | RUNNING YIR 0001 | IN REMOTE YI 0001 | RUN CMD UCR 0001

21-CTRL-RIO-0001 (duplicate of PCS HMI)

SEE TYPICAL I/O AND CONTROLS

480VAC

VALVE ACTUATOR
HS 2001 LOR | ZT 2001 | HS 2001 OSC | ZI 2001 | ZSC 2001 | ZSO 2001

480VAC

VALVE ACTUATOR
HS 1001 LOR | ZT 1001 | HS 1001 OSC | ZI 1001 | ZSC 1001 | ZSO 1001

FINE SCREEN CONTROL SYSTEM PANEL
22-SCR-LCP-0002
(WITH LOCAL STARTERS/DRIVES)
* 480V

POWER JL | SLOW YL | FAST YL | TRBL YA | OFF YL
LDAH | TAH | PAL
LDIT 2001 US | I
ETM KQI | E-STOP HS | RESET HS | OOA HS

FINE SCREEN CONTROL SYSTEM PANEL
22-SCR-LCP-0001
(WITH LOCAL STARTERS/DRIVES)
* 480V

POWER JL | SLOW YL | FAST YL | TRBL YA | OFF YL
LDAH | TAH | PAL
LDIT 1001 US | I
ETM KQI | E-STOP HS | RESET HS | OOA HS

VALVE ACTUATOR
HS 1104 LOR | HS 1104 OSC | ZLC 1104 | ZLO 1104 | ZSC 1104 | ZSO 1104
480V

VALVE ACTUATOR
HS 2003 LOR | HS 2003 OSC | ZLC 2003 | ZLO 2003 | ZSC 2003 | ZSO 2003
480V

CONVEYOR AND DISCHARGE CHUTE CONTROL PANEL
22-SCR-LCP-0003
(WITH LOCAL STARTERS/DRIVES)
* 480V

QB 72-I-001
SAFE SETTLE RETURN FLOW
6"-WWS-PVC-02

30"-WWS-DIP | 30"-WWS-HDPE | BA 71-I-002 TO SAFE SETTLE

6"-WWS-PVC-02

24V FIT 1001 | FE 1001 M 8" | 8"-WWS-DIP | SCR-V-1001 | FLOW CONTROL VALVE | 12"-WWS-DIP

AG 21-I-002
FROM PACKAGED HEADWORKS NO. 2
18"-WWS-DIP

AE 21-I-001
FROM PACKAGED HEADWORKS NO. 1
18"-WWS-DIP

COMPOSITE SAMPLER SCR-SAMP-0001
120VAC
24V LIT 0001 | LE 0001 US
6"-WWS-DIP

SAFE BOX

12"-WWS-DIP

24V FIT 2001 | FE 2001 M 8" | LE 2001A US | 8"-WWS-DIP | 12"-WWS-DIP | SCR-V-2001 | FLOW CONTROL VALVE

SYSTEM CODE = PRW
E-STOP HS | PSL 1001 | LE 1001A US | LE 1001B US | 4"-FA-PVC-01 C | S | PRW-V-1001 | PRW-V-1002 A

PACKAGED FINE SCREEN NO. 1 WITH WASHER COMPACTOR SCR-SCR-1101

14"-WWS-DIP | SCR-V-1104

SYSTEM CODE = PRW
E-STOP HS | PSL 2001 | LE 2001B US | 4"-FA-PVC-01 D | S | PRW-V-2001 | PRW-V-2002 B

PACKAGED FINE SCREEN NO. 2 WITH WASHER COMPACTOR SCR-SCR-1201

14"-WWS-DIP | SCR-V-2003 | 12"-WWS-DIP | BD 31-I-001 TO BNR

FINE SCREEN ODOR CONNECTIONS ON THIS SHEET
C | D | 4"-FA-PVC-01 | 6"-FA-PVC-01 | BC 23-I-001 TO ODOR CONTROL | NOTE 5

HB 34-I-001
FROM RECYCLED WATER PUMPS
2"-PRW-PVC-02

A | B PRW CONNECTIONS ON THIS SHEET

TO HEADWORKS - FINE SCREENS HOSE BIBB

6"-FA-PVC-01 | BB 23-I-001 TO ODOR CONTROL | NOTE 5

SSL 0001

CONVEYOR AND DISCHARGE CHUTE SCR-COS-0001

D

NOTES:

1. SEE LEGEND AND ABBREVIATIONS ON DRAWING 00-I-001, 00-I-002 AND 00-I-003.
2. AREA CODE IS 22 UNLESS OTHERWISE NOTED. SYSTEM CODE IS SCR UNLESS OTHERWISE NOTED.
3. LOCAL CONTROL DEVICES SUCH AS INDICATING LIGHTS AND SWITCHES, LOCATED IN MCC's OR AT DRIVEN EQUIPMENT MAY NOT INDICATED ON THIS P&ID.
4. FOR DRAWING CLARITY, VALVE TAG NUMBER ONLY SHOW THE SEQUENCE NUMBER UNLESS OTHERWISE NOTED.
5. SEE HVAC/ MECHANICAL SPECIFICATION FOR ADDITIONAL DETAILS ON ODOR CONTROL DUCTING.

* ITEM FURNISHED BY PACKAGED FINE SCREENS SUPPLIER.

NO.	BY	CHK	APP
0	BLB	JSM	BLB

REVISIONS AND RECORD OF USE

ISSUED FOR CONSTRUCTION — 5/19/2020

DATE

REGISTERED PROFESSIONAL ENGINEER — BRIAN L. BUTLER — No. E 16569 — ELECTRICAL — STATE OF CALIFORNIA

BLACK & VEATCH

JOINT VENTURE

BLACK & VEATCH | FILANC

CITY OF MORRO BAY
MORRO BAY WATER
RECLAMATION FACILITY (WRF)

HEADWORKS AREA - FINE SCREENS
P&ID
SAFE BOX & FINE SCREENS

DESIGNED: BLB, TDE
DETAILED: PVR
CHECKED: JSM, BDS
APPROVED: BLB
DATE: 5/19/2020

0 1/2 1
IF THIS BAR DOES NOT MEASURE 1" THEN DRAWING IS NOT TO FULL SCALE

PROJECT NO.
400530

22-I-001
SHEET
101 OF 412

PLOTTED: 5/18/2020 4:12:36 PM
D400530

PCS HMI

21-CTRL-RIO-0001

ODOR CONTROL FAN: RUNNING YIR 0001; FAIL YA 0001; IN AUTO YI 0001; DIFF. RESSURE PDAL 0001; VIBRATION HIGH VAH 0001

RECIRCULATION PUMP: RUNNING YIR 0001; FAIL YA 0001; IN AUTO YI 0001; LOW FLOW FAL 0001; pH AI 0001

WATER BOX: FLOW FI 0001; LOW FLOW FAL 0001

PER FLT. DIFF. PRESSURE PDAH 0001; OCS RUN CMD UCR 0001

HUMIDIFIER: LOW TEMP TAL 0002; HIGH TEMP TAH 0001

CONTROL PANEL
23-ODC-LCP-0001
(WITH LOCAL STARTERS/DRIVES)

480V

ODOR CONTROL PACKAGE SKID / PLATFORM

VENT

PDG 0001

PDG 0002

LSL 0002

TG 0001

TG 0002

FSL 0001

M

ODC-V-0014

HUMIDIFICATION

ODOR CONTROL SYSTEM NO. 1
ODC-SCU-0001

STAGE 1: HUMIDIFIER

STAGE 2: BIOFILTER

PG 1002

FG 1002

2"-DRN-PVC-01

D

TSH 0001

TSL 0002

TO SEWER

2"-DRN-PVC-01

AC 21-I-001
FROM PACKAGED HEADWORKS NO. 1

4"-FA-PVC-01

AH 21-I-002
FROM PACKAGED HEADWORKS NO. 2

4"-FA-PVC-01

BB 22-I-001
FROM SAFE BOX

6"-FA-PVC-01

BC 22-I-001
FROM FINE SCREENS

6"-FA-PVC-01

6"-FA-PVC-01

8"-FA-PVC-01

PDIT 0001

ODC-V-0002

ODC-V-0003

ODOR CONTROL PRE-FILTER
ODC-AF-1001

DRAIN

ODC-V-0015

PDSL 0001

VSH 0001

FSL 0001

ODOR CONTROL FAN NO. 1
ODC-FAN-0001

DRAIN

14"-FA-PVC-01

ODC-V-1001

HC 34-I-001
FROM RECYCLED WATER PUMPS

M

FG 1001

W2

ODC-V-0009

PG 1001

FIT 1001

FE 1001

FSL 1001

M

ODC-V-0010

WATERBOX

PG 0001

PG 0002

AIT 0001

PH

24V

AE 0001

PH

S

ODC-V-0011

RECIRCULATION PUMP
ODC-P-0001

SUMP MAKEUP

BIOFILTER IRRIGATION

NOTES:

1. SEE LEGEND AND ABBREVIATIONS ON DRAWINGS 00-I-001, 00I-002 AND 00-I-003.
2. AREA CODE IS 23 UNLESS OTHERWISE NOTED. SYSTEM CODE IS ODC UNLESS OTHERWISE NOTED.
3. LOCAL CONTROL DEVICES SUCH AS INDICATING LIGHTS AND SWITCHES, LOCATED ON MCCs OR AT DRIVEN EQUIPMENT, MAY NOT BE SHOWN ON THIS P&ID.

* ITEM FURNISHED BY PACKAGED ODOR CONTROL SYSTEM SUPPLIER.

NO.	BY	CHK	APP
0	BLB	JSM	BLB

REVISIONS AND RECORD OF USE

5/19/2020 ISSUED FOR CONSTRUCTION

DATE

REGISTERED PROFESSIONAL ENGINEER
BRIAN L. BUTLER
No. E 16569
ELECTRICAL
STATE OF CALIFORNIA

BLACK & VEATCH

JOINT VENTURE

BLACK & VEATCH

FILANC

CITY OF MORRO BAY
MORRO BAY WATER RECLAMATION FACILITY (WRF)

HEADWORKS AREA - ODOR CONTROL
P&ID
ODOR CONTROL SYSTEM

DESIGNED: BLB, TDE
DETAILED: PVR
CHECKED: JSM, BDS
APPROVED: BLB
DATE: 5/19/2020

0 1/2 1
IF THIS BAR DOES NOT MEASURE 1" THEN DRAWING IS NOT TO FULL SCALE

PROJECT NO.
400530

23-I-001
SHEET
102 OF 412

PLOTTED: 5/18/2020 4:12:37 PM
D400530

TYPICAL I/O FOR AER-V-1201

PCS HMI	IN REMOTE	POSITION FEEDBACK	POSITION SETPT	OPEN	CLOSE	pH	FAIL	FAIL	TSS	ORP	FAIL
	YI 1101	ZI 1101	ZC 1101	ZSO 1101	ZSC 1101	AI 0001	UA 0001	UA 0001	AI 0001	AI 1001	UA 1001
31-CTRL-RIO-0001	IN REMOTE	POSITION FEEDBACK	POSITION SETPT	OPEN	CLOSE	pH	FAIL	FAIL	TSS	ORP	FAIL
	YI 1101	ZI 1101	ZC 1101	ZSO 1101	ZSC 1101	AI 0001	UA 0001	UA 0001	AI 0001	AI 1001	UA 1001

PCS HMI	IN REMOTE	FAIL	RUNNING	RUN CMD
	YI 1001	UA 1001	YIR 1001	UCR 1001
80-CTRL-PLC-0001	IN REMOTE	FAIL	RUNNING	RUN CMD
	YI 1001	UA 1001	YIR 1001	UCR 1001

PCS HMI	FLOW	FAIL	DO
	FI 1101	UA 1101	AI 1101
31-CTRL-RIO-0001	FLOW	FAIL	DO
	FI 1101	UA 1101	AI 1101

TYPICAL I/O FOR 31-BNR-V-1001

PCS HMI	FLOW	DO	FAIL	FAIL	MLSS	FAIL	NH3	NH4	IN REMOTE	OPEN	CLOSED	OPEN CMD	CLOSE CMD	LEVEL
	FI 1201	AI 1201	UA 1201	UA 1002	AI 1002	UA 1003	AI 1003	AI 1003	YI 1001	ZIO 1001	ZIC 1001	ZCO 1001	ZCC 1001	LI 1001
31-CTRL-RIO-0001	FLOW	DO	FAIL	FAIL	MLSS	FAIL	NH3	NH4	IN REMOTE	OPEN	CLOSED	OPEN CMD	CLOSE CMD	LEVEL
	FI 1201	AI 1201	UA 1201	UA 1002	AI 1002	UA 1003	AI 1003	AI 1003	YI 1001	ZIO 1001	ZIC 1001	ZCO 1001	ZCC 1001	LI 1001

PCS HMI	RUN CMD	IN REMOTE	RUNNING	FAULT	SPEED FEEDBACK	SPEED SETPT	IN REMOTE	FAIL	RUNNING	RUN CMD
	UCR 1001	YI 1001	YIR 1001	YA 1001	SI 1001	SC 1001	YI 0001	UA 0001	YIR 0001	UCR 0001
80-CTRL-PLC-0001	RUN CMD	IN REMOTE	RUNNING	FAULT	SPEED FEEDBACK	SPEED SETPT	IN REMOTE	FAIL	RUNNING	RUN CMD
	UCR 1001	YI 1001	YIR 1001	YA 1001	SI 1001	SC 1001	YI 0001	UA 0001	YIR 0001	UCR 0001

HS 1101 LOR HS 1101 OSC ZT 1101
ZSO 1101 ZSC 1101 ZI 1101
480V
VALVE ACTUATOR

31-ELEC-MCC-0002

TO 31-CTRL-RIO-0001 TYPICAL I/O

HS 1201 LOR HS 1201 OSC ZT 1201
ZSO 1201 ZSC 1201 ZI 1201
480V
VALVE ACTUATOR

31-BNR-VFD-1001
80-ELEC-MCC-0002/

31-ELEC-MCC-0002

A

HS 1001 LOR HS 1001A OSC ZLC 1001 ZLO 1001
ZSC 1001 ZSO 1001
480V
VALVE ACTUATOR

EL 31-I-004
FROM PROCESS AIR BLOWERS
6"-AA-SS-02

EN 31-I-004
FROM PROCESS AIR BLOWERS
8"-AA-SS-02

AIT 1001 ORP 24V

8" ΔT FE 1101 FIT 1101 24V

AER-V-1101

AIT 1101 DO 24V

6" ΔT FE 1201 FIT 1201 24V

AER-V-1201

AIT 1201 DO 24V
AIT 1002 DO MLSS 24V

AIT 1003 NH3/NH4 120V

AE 1003 NH3/NH4

LIT 1001 24V
LE 1001 US

HS 1001 OO
HS 1001A E-STOP

TSH 1001
MSH 1001

TO 31-CTRL-RIO-0001
FOR OPEN/CLOSE VALVE

M

3"-PRW-PVC-02
3"-PRW-PVC-01
A PRW CONNECTION ON THIS SHEET

HD 34-I-001
FROM RECYCLED WATER PUMPS

ED 31-I-002
TO BNR TRAIN NO. 2

1/2"-NAOH-PE-06
2"-NACL-CPVC-02
TO BNR HOSE BIBB

UK 90-I-003
SODIUM HYDROXIDE

1/2"-NAOH-CS-02

NAOH-V-0001
NAOH-V-0002
NAOH-V-0003

24V AIT 0001 pH

AE 0001 pH

BNR SPLITTER BOX

HS 1001A E-STOP
HS 1001 OO

AE 1001 ORP

TSH 1001 MSH 1001

ANOXIC MIXER BNR-MXR-1001

8"-AA-SS-02

AE 1101 DO

FINE BUBBLE DIFFUSER GRID

6"-AA-SS-02

AE 1201 DO AE 1002 MLSS

FINE BUBBLE DIFFUSER GRID

MIXED LIQUOR COLLECTION CHANNEL

MBR FEED PUMP BNR-P-1001

SCUM COLLECTION BOX

WAS-V-1001

24"-ML-SP
BNR-V-1001
36"-ML-SP
EB 32-I-001
MIXED LIQUOR TO MBR COMMON HEADER

24"-ML-SP
EF 31-I-002
FROM BNR BASIN NO. 2

6"-WAS-DIP
EC 31-I-003
TO SCUM/WAS WETWELL

BD 22-I-001
FROM FINE SCREENS
12"-WWS-DIP

MIXING CHIMNEY

BNR-G-0001
BNR-G-0002

AEROBIC ZONE

EG 31-I-002
FROM BIOLOGICAL REACTOR NO. 2 SCUM COLLECTION BOX
6"-WAS-DIP

OPEN BASIN CONNECTION - NOT PIPE - ML

EE 31-I-002
TO BIOLOGICAL REACTOR NO. 2

WALL OPENING - RAS

24V AIT 0001 TSS

3"-WAS-PVC
3"-WAS-DIP
EA 31-I-003
TO WAS PUMP

OO HS 0001 HS 0001A E-STOP

AE 0001 TSS

SYSTEM CODE "RAS"

RAS DEOX MIXER RAS-MXR-0001

TSH 0001 MSH 0001

FH 32-I-002
FROM MBR TRAIN NO.2 RAS
14"-RAS-SP

FD 32-I-001
FROM MBR TRAIN NO.1 RAS
14"-RAS-SP

30"-RAS-HDPE
30"-RAS-DIP

FO 32-I-007
FROM BNR/MBR DRAIN PUMP
6"-DRN-DIP

NOTES:

1. SEE LEGEND AND ABBREVIATIONS ON DRAWINGS 00-I-001, 00-1-002 AND 00-1-003.
2. AREA CODE IS 31 UNLESS OTHERWISE NOTED. SYSTEM CODE IS BNR UNLESS OTHERWISE NOTED.
3. LOCAL CONTROL DEVICES SUCH AS INDICATING LIGHTS AND SWITCHES, LOCATED ON MCCs OR AT DRIVEN EQUIPMENT, MAY NOT BE SHOWN ON THIS P&ID .

* ITEM FURNISHED BY PROCESS AIR BLOWER SYSTEM SUPPLIER AS AN ADDIDITVIE PRICE.

NO.	BY	CHK'D	APP'D
0	BLB	JSM	BLB

REVISIONS AND RECORD OF USE

5/19/2020 ISSUED FOR CONSTRUCTION

DATE

BRIAN L. BUTLER No. E 16569 REGISTERED PROFESSIONAL ENGINEER STATE OF CALIFORNIA ELECTRICAL

BLACK & VEATCH

JOINT VENTURE

FILANC

BLACK & VEATCH

CITY OF MORRO BAY
MORRO BAY WATER RECLAMATION FACILITY (WRF)

TREATMENT AREA - BNR BASINS
P&ID
BASIN 1 & RAS DEOX

DESIGNED: BLB, KEZ
DETAILED: PVR
CHECKED: JSM, BDS
APPROVED: BLB
DATE: 5/19/2020

0 1/2 1
IF THIS BAR DOES NOT MEASURE 1" THEN DRAWING IS NOT TO FULL SCALE

PROJECT NO. 400530

31-I-001
SHEET 103 OF 412

PLOTTED: 5/18/2020 4:20:42 PM
D400530

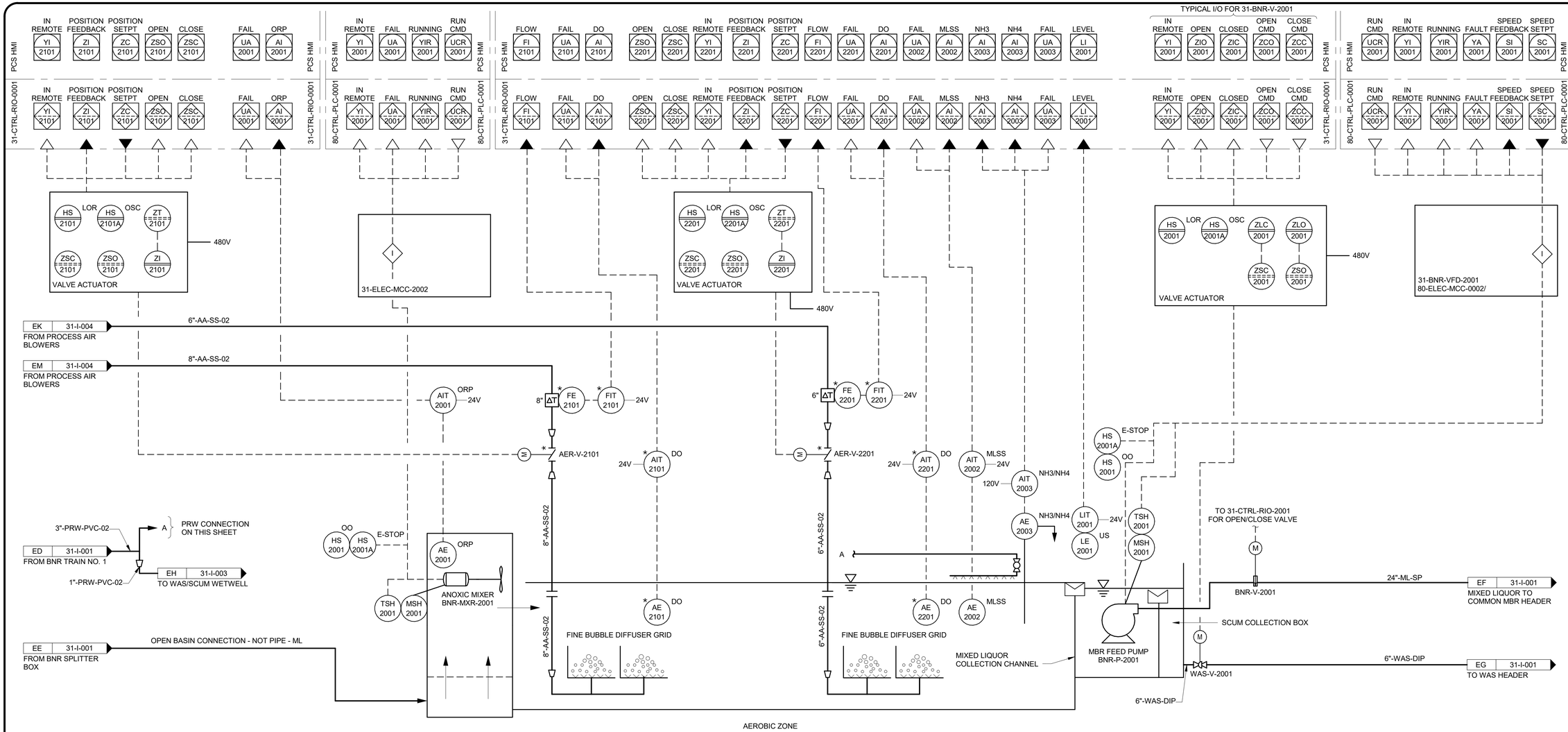

NOTES:

1. SEE LEGEND AND ABBREVIATIONS ON DRAWINGS 00-I-001, 00-1-002 AND 00-1-003.
2. AREA CODE IS 31 UNLESS OTHERWISE NOTED. SYSTEM CODE IS BNR UNLESS OTHERWISE NOTED.
3. LOCAL CONTROL DEVICES SUCH AS INDICATING LIGHTS AND SWITCHES, LOCATED ON MCCs OR AT DRIVEN EQUIPMENT, MAY NOT BE SHOWN ON THIS P&ID.

* ITEM FURNISHED BY PROCESS AIR BLOWER SYSTEM SUPPLIER AS AN ADDIDITVIE PRICE.

NO.	BY	CHK	APP
0	BLB	JSM	BLB

DATE	REVISIONS AND RECORD OF USE
5/19/2020	ISSUED FOR CONSTRUCTION

REGISTERED PROFESSIONAL ENGINEER BRIAN L. BUTLER No. E 16569 ELECTRICAL STATE OF CALIFORNIA

BLACK & VEATCH

JOINT VENTURE

FILANC

CITY OF MORRO BAY
MORRO BAY WATER
RECLAMATION FACILITY (WRF)

TREATMENT AREA - BNR BASINS
P&ID
BASIN 2

DESIGNED: BLB, KEZ
DETAILED: PVR
CHECKED: JSM, BDS
APPROVED: BLB
DATE: 5/19/2020

0 1/2 1
IF THIS BAR DOES NOT MEASURE 1" THEN DRAWING IS NOT TO FULL SCALE

PROJECT NO.
400530

31-I-002

SHEET
104 OF 412

PLOTTED: 5/18/2020 4:20:42 PM
D400530

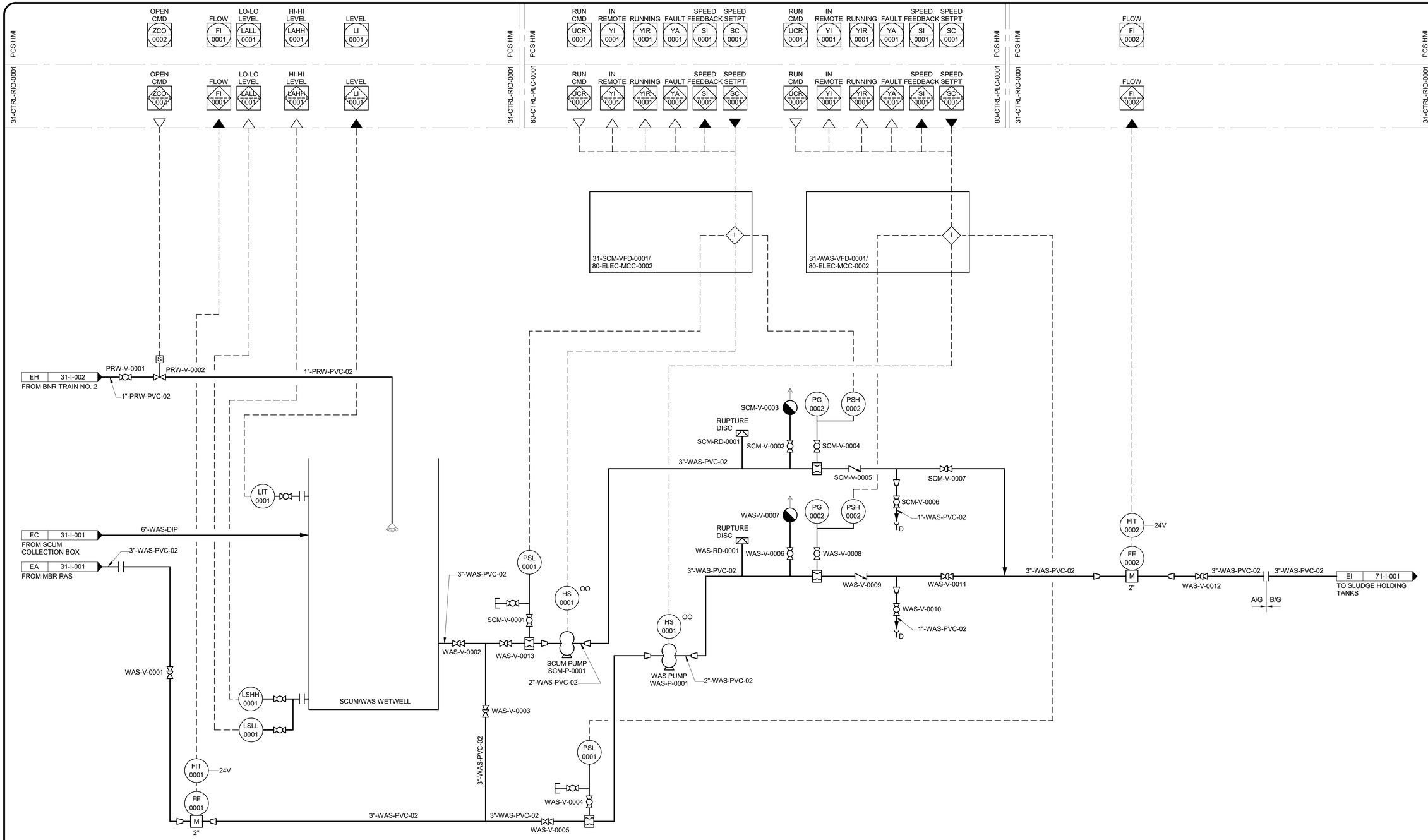

NOTES:

1. SEE LEGEND AND ABBREVIATIONS ON DRAWINGS 00-I-001, 00-1-002 AND 00-1-003.
2. AREA CODE IS 31 UNLESS OTHERWISE NOTED. SYSTEM CODE IS WAS UNLESS OTHERWISE NOTED.
3. LOCAL CONTROL DEVICES SUCH AS INDICATING LIGHTS AND SWITCHES, LOCATED ON MCCs OR AT DRIVEN EQUIPMENT, MAY NOT BE SHOWN ON THIS P&ID.

NO.	BY	CHK	APP
0	BLB	JSM	BLB

DATE	REVISIONS AND RECORD OF USE
5/19/2020	ISSUED FOR CONSTRUCTION

REGISTERED PROFESSIONAL ENGINEER
BRIAN L. BUTLER
No. E 16569
ELECTRICAL
STATE OF CALIFORNIA

BLACK & VEATCH
JOINT VENTURE
BLACK & VEATCH
FILANC

CITY OF MORRO BAY
MORRO BAY WATER
RECLAMATION FACILITY (WRF)

TREATMENT AREA - BNR BASINS
P&ID
WAS SYSTEM

DESIGNED: BLB, KEZ
DETAILED: PVR
CHECKED: JSM, BDS
APPROVED: BLB
DATE: 5/19/2020

0 1/2 1
IF THIS BAR DOES NOT MEASURE 1" THEN DRAWING IS NOT TO FULL SCALE

PROJECT NO.
400530

31-I-003
SHEET
105 OF 412

PLOTTED: 5/18/2020 4:20:44 PM
D400530

PCS HMI

80-CTRL-PLC-0001

SPEED CONTROL SC 0101 | SPEED INDCTN SI 0101 | FAULT YA 0101 | RUNNING YIR 0101 | RUN CMD UCR 0101

SPEED CONTROL SC 0201 | SPEED INDCTN SI 0201 | FAULT YA 0201 | RUNNING YIR 0201 | RUN CMD UCR 0201

SPEED CONTROL SC 0301 | SPEED INDCTN SI 0301 | FAULT YA 0301 | RUNNING YIR 0301 | RUN CMD UCR 0301

PCS HMI

80-CTRL-PLC-0001

31-CTRL-RIO-0001

ALARM YA 0301

PCS HMI

31-CTRL-RIO-0001

31-AER-VFD-0101
80-ELEC-MCC-0002

31-AER-VFD-0201
80-ELEC-MCC-0002

31-AER-VFD-0301
80-ELEC-MCC-0002

PDSH 0101 | PDG 0101 | AER-V-0101 | AER-V-0102 | AIR FILTER AER-FLT-0101 | S | S | DRY SCREW PROCESS AIR BLOWER NO. 1 AER-BL-0101 | TG 0101 | TSH 0101 | AER-V-0104 | PG 0101 | PSH 0101 | AER-V-0105 | AER-V-0106 | 8"-AA-SS-02 | AER-V-0107

PDSH 0201 | PDG 0201 | AER-V-0201 | AER-V-0202 | AIR FILTER AER-FLT-0201 | S | S | DRY SCREW PROCESS AIR BLOWER NO. 2 AER-BL-0201 | TG 0201 | TSH 0201 | AER-V-0204 | PG 0201 | PSH 0201 | AER-V-0205 | AER-V-0206 | 8"-AA-SS-02 | AER-V-0207

PDSH 0301 | PDG 0301 | AER-V-0301 | AER-V-0302 | AIR FILTER AER-FLT-0301 | S | S | DRY SCREW PROCESS AIR BLOWER NO. 3 AER-BL-0301 | TG 0301 | TSH 0301 | AER-V-0304 | PG 0302 | PSH 0302 | AER-V-0305 | AER-V-0306 | 8"-AA-SS-02 | AER-V-0307

PROCESS AIR BLOWER SKID (TYP)

12"-AA-SS-02

PIT 0001

AER-V-0001

12"-AA-SS-02

6"-AA-SS-02 — EK 31-I-002 — TO BNR TRAIN NO. 2 ZONE 2

6"-AA-SS-02 — EL 31-I-001 — TO BNR TRAIN NO. 1 ZONE 2

8"-AA-SS-02 — EM 31-I-002 — TO BNR TRAIN NO. 2 ZONE 1

8"-AA-SS-02 — EN 31-I-001 — TO BNR TRAIN NO. 1 ZONE 1

NOTES:

1. SEE LEGEND AND ABBREVIATIONS ON DRAWINGS 00-I-001, 00I-002 AND 00-I-003
2. LOCAL CONTROL DEVICES SUCH AS INDICATING LIGHTS AND SWITCHES, LOCATED ON MCCs OR AT DRIVEN EQUIPMENT, MAY NOT BE SHOWN ON THIS P&ID.
3. AREA CODE IS 31 UNLESS OTHERWISE NOTED. SYSTEM CODE IS AER UNLESS OTHERWISE NOTED.
4. INLET/FILTER/SILENCER, DRIVE, PANEL, BLOWER UNIT, SHALL ALL BE PROVIDED BY THE BLOWER MANUFACTURER.

* ITEM FURNISHED BY PROCESS AIR BLOWER SYSTEM SUPPLIER.

NO.	BY	CHK	APP
0	BLB	JSM	BLB

DATE	REVISIONS AND RECORD OF USE
5/19/2020	ISSUED FOR CONSTRUCTION

REGISTERED PROFESSIONAL ENGINEER
BRIAN L. BUTLER
No. E 16569
ELECTRICAL
STATE OF CALIFORNIA

BLACK & VEATCH
JOINT VENTURE
BLACK & VEATCH
FILANC

CITY OF MORRO BAY
MORRO BAY WATER
RECLAMATION FACILITY (WRF)

TREATMENT AREA - BNR BASINS
P&ID
PROCESS AIR BLOWERS

DESIGNED:	BLB, KEZ
DETAILED:	PVR
CHECKED:	JSM, BDS
APPROVED:	BLB
DATE:	5/19/2020

0 1/2 1
IF THIS BAR DOES NOT MEASURE 1" THEN DRAWING IS NOT TO FULL SCALE

PROJECT NO.
400530

31-I-004
SHEET
106 OF 412

PLOTTED: 5/18/2020 4:20:44 PM
D400530

TYPICAL I/O & CONTROLS FOR ON-OFF VALVE 32-CA-V-1001

PCS HMI / *32-MBR-PLC-0001: IN REMOTE YI 1001, OPEN ZIO 1001, CLOSED ZIC 1001, OPEN CMD ZCO 1001, CLOSE CMD ZCC 1001

PCS HMI / *32-MBR-PLC-0001: OPEN CMD ZCO 1002

PCS HMI / *32-MBR-PLC-0001: OPEN ZIO 1001, CLOSED ZIC 1001, OPEN CMD ZCO 1001, CLOSE CMD ZCC 1001

PCS HMI / *32-MBR-PLC-0001: OPEN ZIO 1002, CLOSED ZIC 1002, OPEN CMD ZCO 1002, CLOSE CMD ZCC 1002

PCS HMI / *32-MBR-PLC-0001: CLOSED ZIC 1006, OPEN ZIO 1006

PCS HMI / *32-MBR-PLC-0001: HI-HI LEVEL LAHH 1001, LO-LO LEVEL LALL 1001, LEVEL LI 1001

PCS HMI / 31-CTRL-RIO-0001: LEVEL LI 1002

PCS HMI / 31-CTRL-RIO-0001: IN REMOTE YI 1001, OPEN ZIO 1001, CLOSED ZIC 1001, OPEN CMD ZCO 1001, CLOSE CMD ZCC 1001, FLOW FI 1001

PCS HMI / 31-CTRL-RIO-0001: IN REMOTE YI 2001, OPEN ZIO 2001, CLOSED ZIC 2001, POSITION FEEDBACK ZI 2001, POSITION SETPT ZC 2001

LOR HS 1001, OSC HS 1001A, ZLC 1001, ZLO 1001, ZSC 1001, ZSO 1001 — VALVE ACTUATOR — 120V

LOR HS 2001, OSC HS 2001, ZT 2101, ZI 2101, ZSC 2001, ZSO 2001 — VALVE ACTUATOR — 480V

AIR SUPPLY ASSEMBLY *

FP 32-I-008 — INSTRUMENT AIR — 1/2"-IA-CU — IA-V-1001 — AIR FILTER IA-FLT-1001 — 1/4"-IA-CU — IA-V-1002

EJECTOR ASSEMBLY *

I/P, ZSC 1003, ZSO 1003 — MEM-V-1003

MEM-V-1002

MEM-V-1001 — VACUUM EJECTOR (FOR PRIMING)

TO 32-MBR-PP-0001 ON 32-I-003

PIT 1001, ZSC 1006, ZSO 1006 — BY MBR SUPPLIER | BY GENERAL CONTRACTOR

MEM-V-1004

MEM-V-1006

MEM-V-1102, MEM-V-1202, MEM-V-1302

6"-MFF-SS-04

CASSETTE A-1 MEM, CASSETTE A-2 MEM, CASSETTE A-3 MEM

3"-AS-SS-02

AIR-V-1101, AIR-V-1201, AIR-V-1301

M — 480V — MEM-V-1001

EB 31-I-001 — MIXED LIQUOR FROM BIOLOGICAL REACTORS — 36"-ML-SP — 24"-ML-SP

24"-ML-SP

FS 32-I-008 — INSTRUMENT AIR — 1/2"-IA-CU

FM 32-I-006 — AIR FROM BLOWER MEMBRANE — 6"-AS-SS-02

I/P, ZSC 1001, ZSO 1001 — AIR-V-1001 — 6"-AS-SS-02

BY GENERAL CONTRACTOR | BY MBR SUPPLIER *

HE 34-I-001 — FROM RECYCLED WATER PUMPS — 2"-PRW-PVC-02 — TO MBR HOSE BIBBS

1"-CA-PVC-02 — SEE TYPICAL I/O & CONTROLS

CA-V-1001, CA-V-1002, CA-V-1003

NOCL-V-1001, NOCL-V-1002, NOCL-V-1003

3/4"-CA-PE-06 — FA 32-I-002 — CITRIC ACID SOLUTION TO MEMBRANE BASIN NO. 2

3/4"-NACL-TEFL-01 — FB 32-I-002 — SODIUM HYPOCHLORITE TO MEMBRANE BASIN NO. 2

3/4"-CA-PE-06 — 90-I-006 UO — CITRIC ACID SOLUTION

2"-CA-CPVC-02 — 90-I-002 UG — SODIUM HYPOCHLORITE SOLUTION

2"-NACL-CPVC-02

3/4"-NACL-TEFL-01

1"-NACL-CPVC-02

10"-MFF-SS-04 — FC 32-I-003 — FILTRATE/CIP SOLUTION TO/FROM PROCESS PUMP

LSHH 1001, LSLL 1001

24V — LIT 1001, LE 1001

LIT 1002, LE 1002 — RAD 24V

RAS WEIR

RAS COLLECTION CHANNEL NO. 1

FIT 1001 — 24V

FE 1001

M — 14" — 14"-RAS-SP — RAS-V-1001 — FD 31-I-001 — TO RAS DEOX

6"-DRN-DIP — FE 32-I-007 — MIXED LIQUOR TO DRAIN PUMP

24"-ML-SP — FF 32-I-002 — TO MEMBRANE BASIN NO. 2

NOTES :

1. SEE LEGEND AND ABBREVIATIONS ON DRAWINGS 00-I-001, 00-I-002 AND 00-I-003.
2. AREA CODE IS 32 UNLESS OTHERWISE NOTED. SYSTEM CODE IS MEM UNLESS OTHERWISE NOTED.
3. LOCAL CONTROL DEVICES SUCH AS INDICATING LIGHTS AND SWITCHES, LOCATED ON MCCs OR AT DRIVEN EQUIPMENT, MAY NOT BE SHOWN ON THIS P&ID.
4. DRAWING TYPICAL FOR EVERY MEMBRANE TRAIN, WITH EXCEPTION OF COMMON PIPES.

* ITEM FURNISHED BY MBR SYSTEM SUPPLIER.

NO.	BY	CHK	APP
0	BLB	JSM	BLB

REVISIONS AND RECORD OF USE

ISSUED FOR CONSTRUCTION — 5/19/2020

REGISTERED PROFESSIONAL ENGINEER — BRIAN L. BUTLER — No. E 16569 — STATE OF CALIFORNIA — ELECTRICAL

BLACK & VEATCH JOINT VENTURE — BLACK & VEATCH — FILANC

CITY OF MORRO BAY
MORRO BAY WATER RECLAMATION FACILITY (WRF)

TREATMENT AREA - MBR SYSTEM
P&ID
MEMBRANE BASIN 1

DESIGNED: BLB, KEZ
DETAILED: PVR
CHECKED: JSM, BDS
APPROVED: BLB
DATE: 5/19/2020

0 1/2 1
IF THIS BAR DOES NOT MEASURE 1" THEN DRAWING IS NOT TO FULL SCALE

PROJECT NO. 400530

32-I-001
SHEET 107 OF 412

PLOTTED: 5/18/2020 4:20:45 PM
D400530

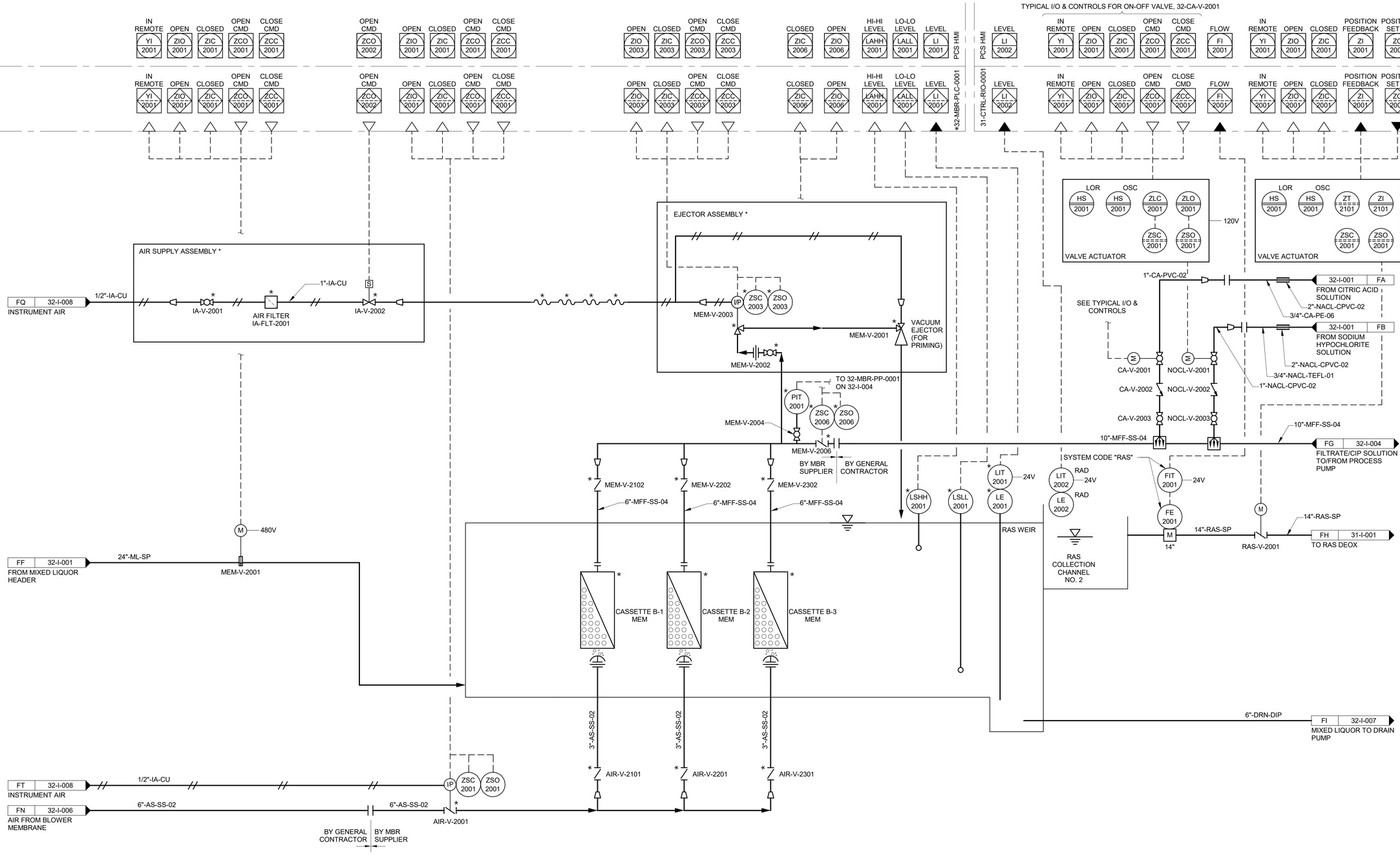

NOTES :

1. SEE LEGEND AND ABBREVIATIONS ON DRAWINGS 00-I-001, 00-I-002 AND 00-I-003.
2. AREA CODE IS 32 UNLESS OTHERWISE NOTED. SYSTEM CODE IS MEM UNLESS OTHERWISE NOTED.
3. LOCAL CONTROL DEVICES SUCH AS INDICATING LIGHTS AND SWITCHES, LOCATED ON MCCs OR AT DRIVEN EQUIPMENT, MAY NOT BE SHOWN ON THIS P&ID.
4. DRAWING TYPICAL FOR EVERY MEMBRANE TRAIN, WITH EXCEPTION OF COMMON PIPES.

* ITEM FURNISHED BY MBR SYSTEM SUPPLIER

NO.	BY	CHK	APP	DATE	REVISIONS AND RECORD OF USE
0	BLB	JSM	BLB	5/19/2020	ISSUED FOR CONSTRUCTION

REGISTERED PROFESSIONAL ENGINEER
BRIAN L. BUTLER
No. E 16569
ELECTRICAL
STATE OF CALIFORNIA

BLACK & VEATCH JOINT VENTURE
BLACK & VEATCH
FILANC

CITY OF MORRO BAY
MORRO BAY WATER RECLAMATION FACILITY (WRF)

TREATMENT AREA - MBR SYSTEM
P&ID
MEMBRANE BASIN 2

DESIGNED: BLB, KEZ
DETAILED: PVR
CHECKED: JSM, BDS
APPROVED: BLB
DATE: 5/19/2020

0 1/2 1
IF THIS BAR DOES NOT MEASURE 1" THEN DRAWING IS NOT TO FULL SCALE

PROJECT NO. 400530

32-I-002
SHEET 108 OF 412

PLOTTED: 5/19/2020 4:20:46 PM
D400530

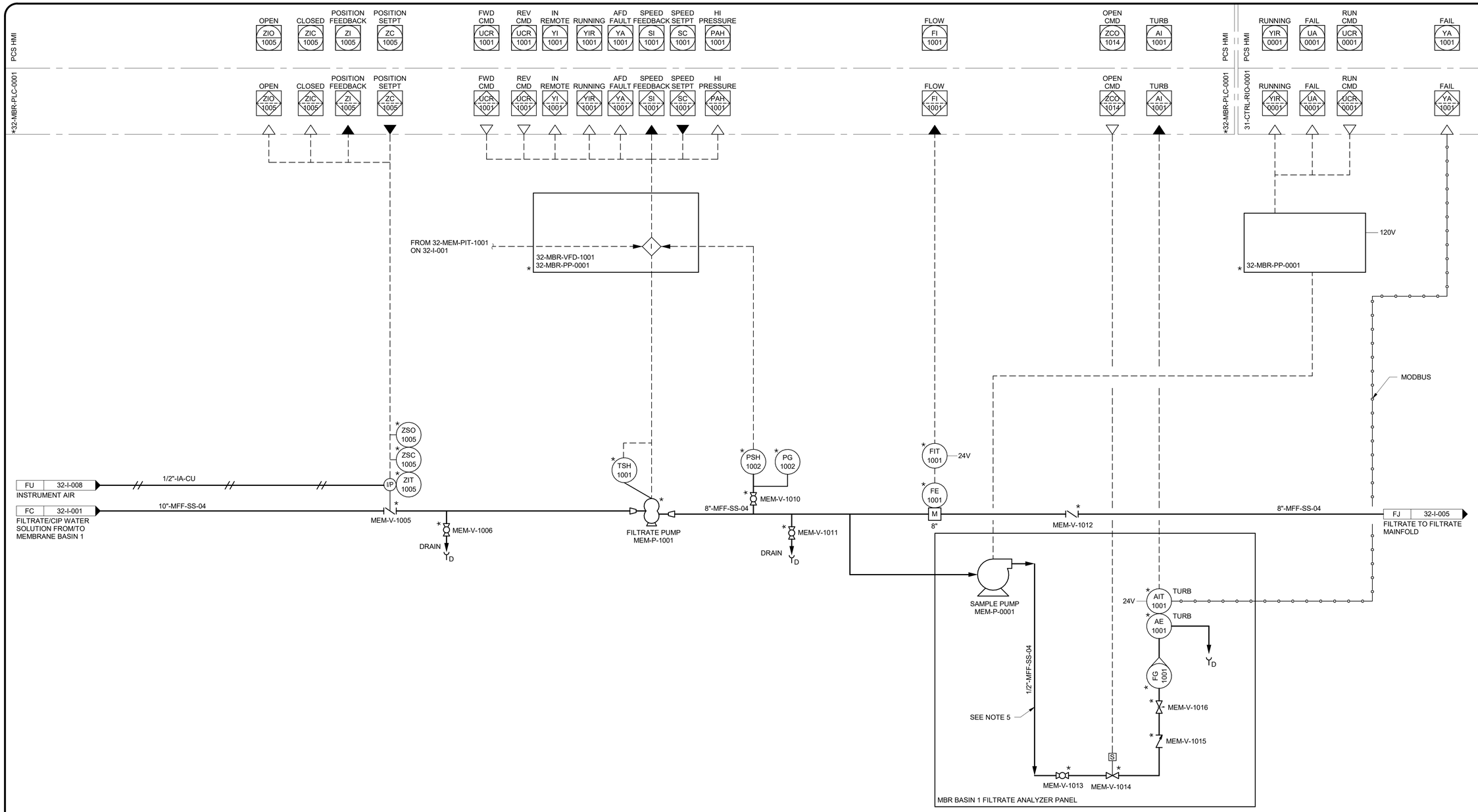

NOTES:

1. SEE LEGEND AND ABBREVIATIONS ON DRAWINGS 00-I-001, 00-I-002 AND 00-I-003.
2. AREA CODE IS 32 UNLESS OTHERWISE NOTED. SYSTEM CODE IS MEM UNLESS OTHERWISE NOTED.
3. LOCAL CONTROL DEVICES SUCH AS INDICATING LIGHTS AND SWITCHES, LOCATED ON MCCs OR AT DRIVEN EQUIPMENT, MAY NOT BE SHOWN ON THIS P&ID.
4. PRIMING SYSTEM CONNECTION AND PRESSURE TRANSMITTER MUST BE LOCATED AT HIGH POINT OF MEMBRANE TANK HEADER.
5. TURBIDIMETER SHALL BE INSTALLED PER MANUFACTURER'S RECOMMENDATIONS.

* ITEM FURNISHED BY MBR SYSTEM SUPPLIER.

NO.	BY	CHK	APP
0	BLB	JSM	BLB

REVISIONS AND RECORD OF USE

ISSUED FOR CONSTRUCTION — 5/19/2020

REGISTERED PROFESSIONAL ENGINEER
BRIAN L. BUTLER
No. E 16569
ELECTRICAL
STATE OF CALIFORNIA

BLACK & VEATCH JOINT VENTURE
BLACK & VEATCH
FILANC

CITY OF MORRO BAY
MORRO BAY WATER RECLAMATION FACILITY (WRF)

TREATMENT AREA - MBR SYSTEM
P&ID
FILTRATE PUMP, BASIN 1

DESIGNED: BLB, KEZ
DETAILED: PVR
CHECKED: JSM, BDS
APPROVED: BLB
DATE: 5/19/2020

0 1/2 1
IF THIS BAR DOES NOT MEASURE 1" THEN DRAWING IS NOT TO FULL SCALE

PROJECT NO. 400530

32-I-003

SHEET 109 OF 412

PLOTTED: 5/18/2020 4:20:47 PM
D400530

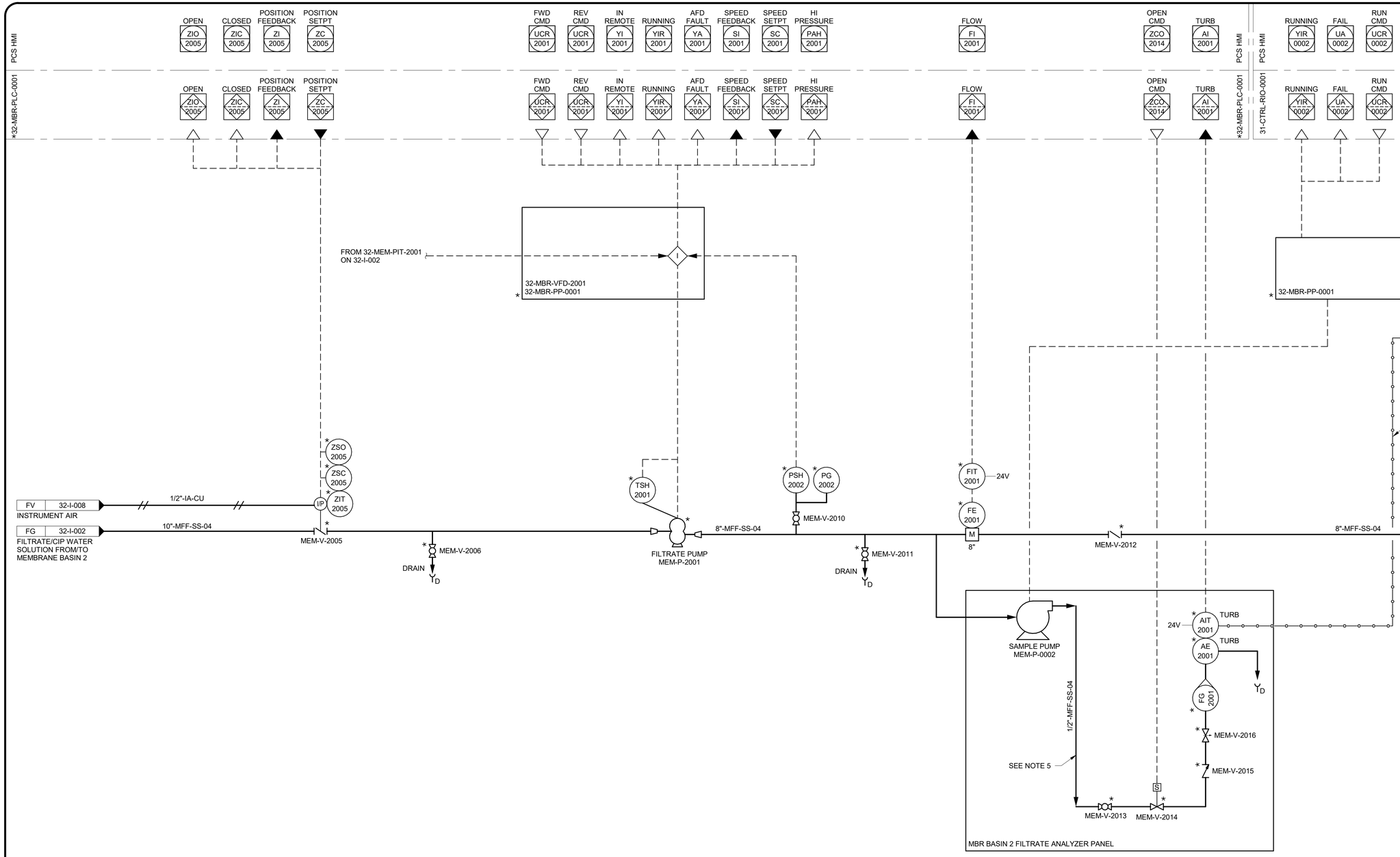

NOTES:

1. SEE LEGEND AND ABBREVIATIONS ON DRAWINGS 00-I-001, 00-I-002 AND 00-I-003.
2. AREA CODE IS 32 UNLESS OTHERWISE NOTED. SYSTEM CODE IS MEM UNLESS OTHERWISE NOTED.
3. LOCAL CONTROL DEVICES SUCH AS INDICATING LIGHTS AND SWITCHES, LOCATED ON MCCs OR AT DRIVEN EQUIPMENT, MAY NOT BE SHOWN ON THIS P&ID.
4. PRIMING SYSTEM CONNECTION AND PRESSURE TRANSMITTER MUST BE LOCATED AT HIGH POINT OF MEMBRANE TANK HEADER.
5. TURBIDIMETER SHALL BE INSTALLED PER MANUFACTURER'S RECOMMENDATIONS.

* ITEM FURNISHED BY MBR SYSTEM SUPPLIER.

NO.	BY	CHK	APP
0	BLB	JSM	BLB

REVISIONS AND RECORD OF USE

ISSUED FOR CONSTRUCTION — 5/19/2020

DATE

REGISTERED PROFESSIONAL ENGINEER
BRIAN L. BUTLER
No. E 16569
ELECTRICAL
STATE OF CALIFORNIA

BLACK & VEATCH
JOINT VENTURE
FILANC
BLACK & VEATCH

CITY OF MORRO BAY
MORRO BAY WATER RECLAMATION FACILITY (WRF)

TREATMENT AREA - MBR SYSTEM
P&ID
FILTRATE PUMP, BASIN 2

DESIGNED: BLB, KEZ
DETAILED: PVR
CHECKED: JSM, BDS
APPROVED: BLB
DATE: 5/19/2020

0 1/2 1
IF THIS BAR DOES NOT MEASURE 1" THEN DRAWING IS NOT TO FULL SCALE

PROJECT NO.
400530

32-I-004
SHEET
110 OF 412

PLOTTED: 5/18/2020 4:20:48 PM
D400530

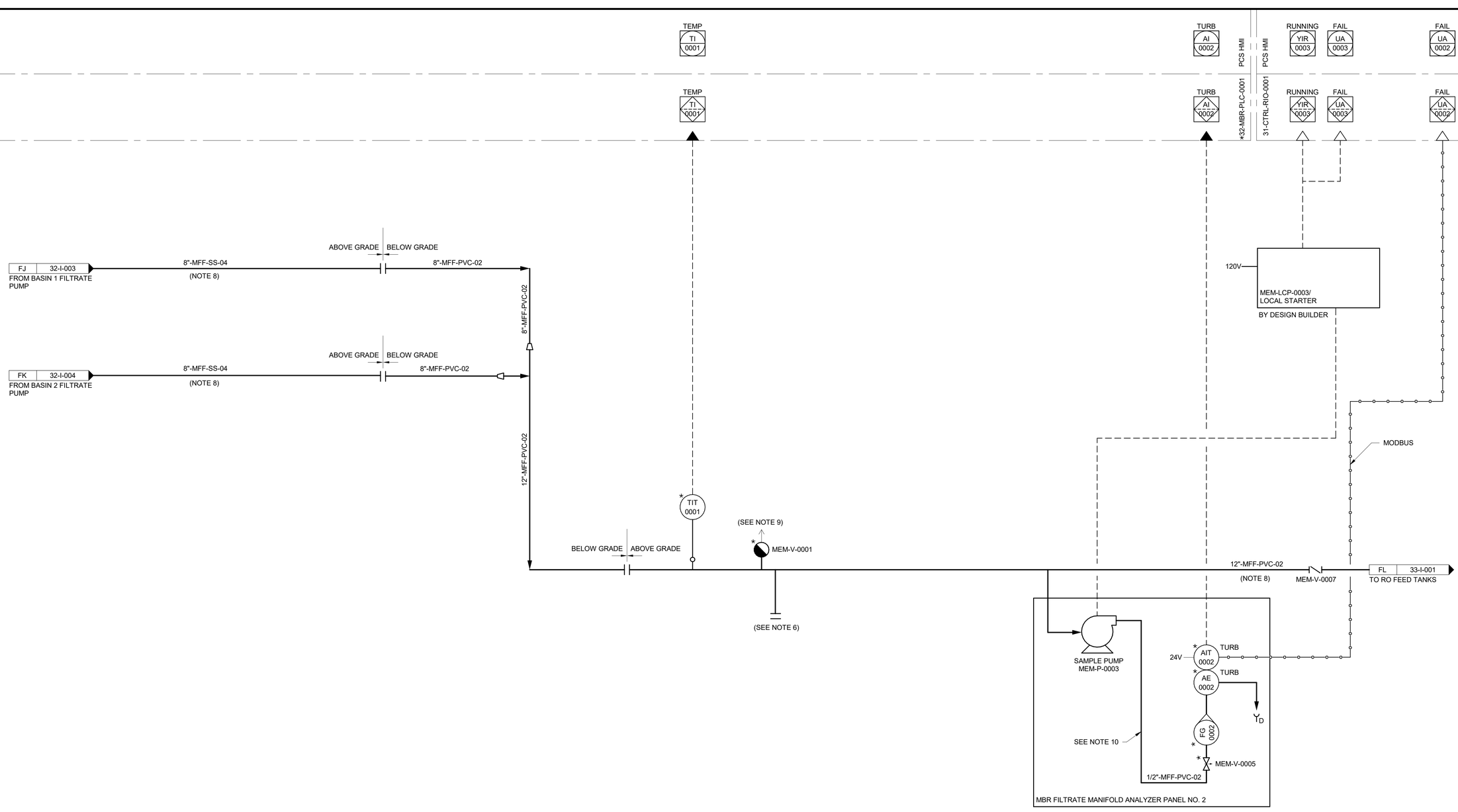

NOTES:

1. SEE LEGEND AND ABBREVIATIONS ON DRAWINGS 00-I-001, 00-I-002 AND 00-I-003.
2. AREA CODE IS 32 UNLESS OTHERWISE NOTED. SYSTEM CODE IS MEM UNLESS OTHERWISE NOTED.
3. LOCAL CONTROL DEVICES SUCH AS INDICATING LIGHTS AND SWITCHES, LOCATED ON MCC's OR AT DRIVEN EQUIPMENT, MAY NOT BE SHOWN ON THIS P&ID.
4. FLOOR DRAINS TO BE PROVIDED AND PIPED INTO BY GENERAL CONTRACTOR, AS REQUIRED.
5. ALL EQUIPMENT ON THIS SHEET IS DESIGNED TO BE INSTALLED IN A NON-CLASSIFIED AREA (PER NFPA 820)
6. CAPPED CONNECTION FOR RECIRCULATION BACK TO THE BIOREACTOR DURING START-UP. TEMPORARY PIPING IS PROVIDED BY OTHERS.
7. FINAL SIZING AND DESIGN TO BE VERIFIED DURING DETAIL PROJECT ENGINEERING.
8. SCH80 PVC IS ACCEPTABLE.
9. COMBINATION VACUUM BREAK/AIR RELEASE, AS REQUIRED.
10. TURBIDITY SHALL BE INSTALLED PER MANUFACTURER'S RECOMMENDATIONS.

* ITEM FURNISHED BY MBR SYSTEM SUPPLIER.

NO.	BY	CHK	APP
0	BLB	JSM	BLB

REVISIONS AND RECORD OF USE

ISSUED FOR CONSTRUCTION 5/19/2020

DATE

REGISTERED PROFESSIONAL ENGINEER
BRIAN L. BUTTERS
No. E 16569
ELECTRICAL
STATE OF CALIFORNIA

BLACK & VEATCH
JOINT VENTURE
BLACK & VEATCH
FILANC

CITY OF MORRO BAY
MORRO BAY WATER
RECLAMATION FACILITY (WRF)

TREATMENT AREA - MBR SYSTEM
P&ID
FILTRATE MANIFOLD

DESIGNED: BLB, KEZ
DETAILED: PVR
CHECKED: JSM, BDS
APPROVED: BLB
DATE: 5/19/2020

0 1/2 1
IF THIS BAR DOES NOT MEASURE 1" THEN DRAWING IS NOT TO FULL SCALE

PROJECT NO.
400530

32-I-005
SHEET
111 OF 412

PLOTTED: 5/18/2020 4:20:48 PM
D400530

PCS HMI

*32-MBR-PLC-0001

SPEED CONTROL SC 0101 | SPEED INDCTN SI 0101 | FAULT YA 0101 | RUNNING YIR 0101 | RUN CMD UCR 0101

SPEED CONTROL SC 0201 | SPEED INDCTN SI 0201 | FAULT YA 0201 | RUNNING YIR 0201 | RUN CMD UCR 0201

(SEE NOTE 8)

FAIL YA | RUN YL | START HS | STOP HS | LOR HS | TAH | PDAH | PAH

PWR ON YL

*32-MBR-LCP-0001

32-MBR-VFD-0101

32-MBR-VFD-0201

MEMBRANE SCOUR BLOWER NO.1 SKID

PDSH 0101 | PDG 0101 | TSH 0101 | PG 0102 | PSH 0102 | FSL 0101

AIR-V-0101 | AIR-V-0102 | AIR-V-0104 | AIR-V-0105

AIR-FLT-0101

NOTE 4 (TYP)

S | S

ROTARY LOBE MEMBRANE SCOUR BLOWER NO. 1 AIR-BL-0101

6"-AS-SS-02

AIR-V-0106

(SEE NOTE 6)

AIR-V-0107

MEMBRANE SCOUR BLOWER NO.2 SKID

PDSH 0201 | PDG 0201 | TSH 0201 | PG 0202 | PSH 0202 | FSL 0201

AIR-V-0201 | AIR-V-0202 | AIR-V-0204 | AIR-V-0205

AIR-FLT-0201

S | S

ROTARY LOBE MEMBRANE SCOUR BLOWER NO. 2 AIR-BL-0201

6"-AS-SS-02

AIR-V-0206

(SEE NOTE 6)

AIR-V-0207

8"-AS-SS-02

8"-AS-SS-02 (SEE NOTE 7)

6"-AS-SS-02 | FM 32-I-001 | TO MEMBRANE BASIN NO. 1

6"-AS-SS-02 | FN 32-I-002 | TO MEMBRANE BASIN NO. 2

NOTES:

1. SEE LEGEND AND ABBREVIATIONS ON DRAWING 00-I-001, 00-I-002 AND 00-I-003.
2. AREA CODE IS 32 UNLESS OTHERWISE NOTED. SYSTEM CODE IS AIR UNLESS OTHERWISE NOTED.
3. LOCAL CONTROL DEVICES SUCH AS INDICATING LIGHTS AND SWITCHES, LOCATED IN MCC's OR AT DRIVEN EQUIPMENT MAY NOT INDICATED ON THIS P&ID.
4. BLOWER FLEXIBLE CONNECTION.
5. ALL EQUIPMENT ON THIS SHEET DESIGNED TO BE INSTALLED IN A NON-CLASSIFIED AREA (PER NFPA 820)
6. A PORTION OF THE AIR LINE NEEDS TO BE HIGHER THAN THE TANK OPERATING LEVEL TO PREVENT WATER BACK FLOW.
7. FINAL SIZING AND DESIGN TO BE VERIFIED DURING PROJECT ENGINEERING.
8. HANDSWITCHES, PUSHBUTTONS AND INDICATING LIGHTS ARE DELETED IF AN OIT IS PROVIDED.

* ITEM FURNISHED BY MBR SYSTEM SUPPLIER.

NO.	BY	CHK	APP
0	BLB	JSM	BLB

DATE	REVISIONS AND RECORD OF USE
5/19/2020	ISSUED FOR CONSTRUCTION

REGISTERED PROFESSIONAL ENGINEER
BRIAN L. BUTLER
No. E 16569
ELECTRICAL
STATE OF CALIFORNIA

BLACK & VEATCH
JOINT VENTURE
BLACK & VEATCH
FILANC

CITY OF MORRO BAY
MORRO BAY WATER
RECLAMATION FACILITY (WRF)

TREATMENT AREA - MBR SYSTEM
P&ID
MBR SCOUR AIR BLOWERS

DESIGNED: BLB, KEZ
DETAILED: PVR
CHECKED: JSM, BDS
APPROVED: BLB
DATE: 5/19/2020

0 1/2 1
IF THIS BAR DOES NOT MEASURE 1" THEN DRAWING IS NOT TO FULL SCALE

PROJECT NO. 400530

32-I-006
SHEET 112 OF 412

PLOTTED: 5/18/2020 4:20:49 PM
D400530

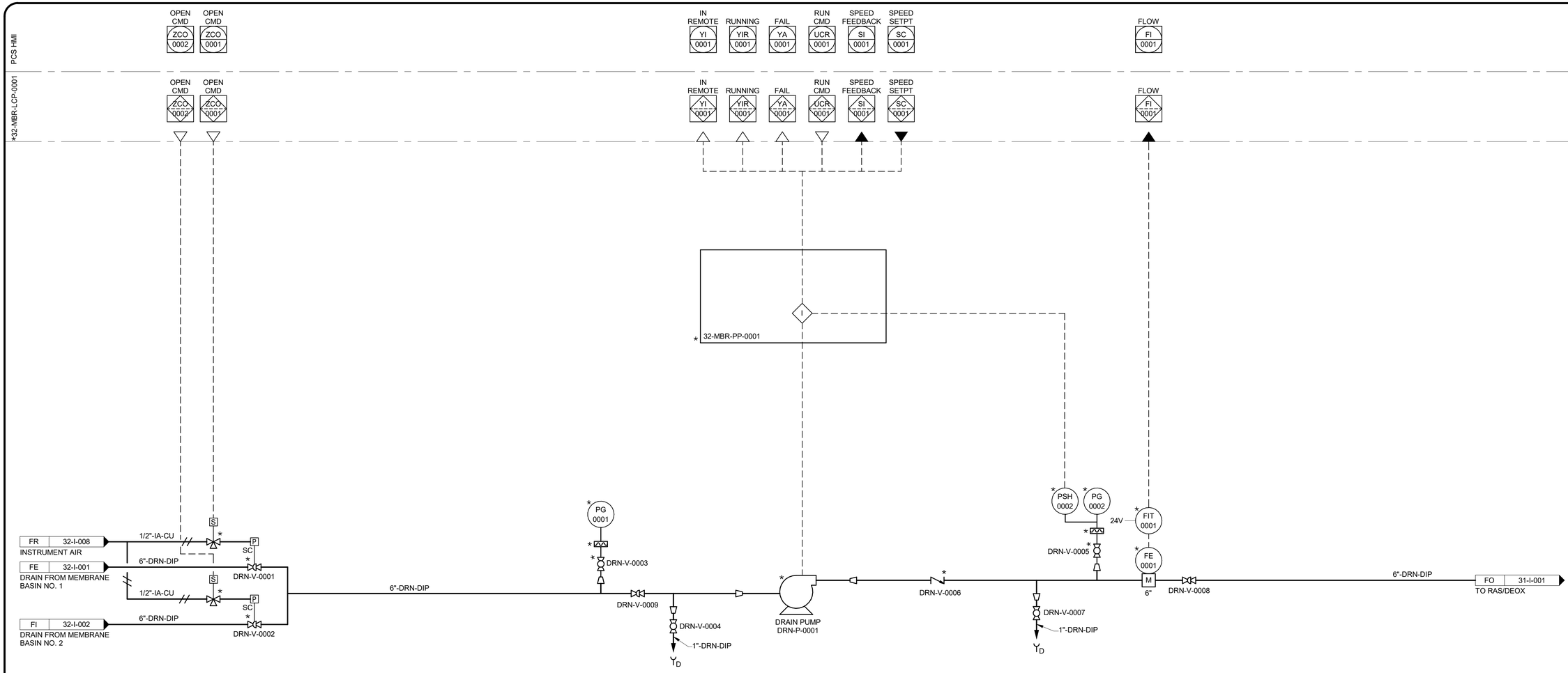

NOTES:

1. SEE LEGEND AND ABBREVIATIONS ON DRAWING 00-I-001, 00-I-002 AND 00-I-003.
2. AREA CODE IS 32 UNLESS OTHERWISE NOTED. SYSTEM CODE IS DRN UNLESS OTHERWISE NOTED.
3. LOCAL CONTROL DEVICES SUCH AS INDICATING LIGHTS AND SWITCHES, LOCATED ON MCC's OR AT DRIVEN EQUIPMENT, MAY NOT BE SHOWN ON THIS P&ID.
4. FLOOR DRAINS TO BE PROVIDED AND PIPED INTO BY GENERAL CONTRACTOR, AS REQUIRED.
5. BUTTERFLY VALVES ARE USED ON WASTE WATER AND MIXED LIQUOR SERVICES
6. DESIGN ENGINEER TO BE INSURE THERE ENOUGH BACK PRESSURE IN THIS LINE IN TO ALLOW FOR WAS REMOVAL REFER TO NEXT NOTE FOR MORE DETAILS.
7. OPTIONAL VALVE CAN BE ACTUATED TO BE ABLE TO AUTOMATICALLY THROTTLE THE LINE IN ORDER TO CREATE BACK PRESSURE FOR SLUDGE WASTING - REFER TO PREVIOUS NOTE.
8. 5 PIPES DIAMETERS UPSTREAM, 3 PIPE DIAMETERS DOWN STREAM, STRAIGHT PIE RUN RECOMMENDED FOR MAXIMUM ACCURACY. PIPE MUST BE ARRANGED SO MAG IS ALWAYS FLOODED.
9. ALL EQUIPMENT ON THIS SHEET IS DESIGNED TO BE INSTALLED IN A NON-CLASSIFIED AREA (PER NFPA 820).

* ITEM FURNISHED BY MBR SYSTEM SUPPLIER.

NO.	BY	CHK	APP
0	BLB	JSM	BLB

REVISIONS AND RECORD OF USE

5/19/2020 ISSUED FOR CONSTRUCTION

DATE

REGISTERED PROFESSIONAL ENGINEER
BRIAN L. BUTTERS
No. E 16569
ELECTRICAL
STATE OF CALIFORNIA

BLACK & VEATCH
JOINT VENTURE
BLACK & VEATCH
FILANC

CITY OF MORRO BAY
MORRO BAY WATER
RECLAMATION FACILITY (WRF)

TREATMENT AREA - MBR SYSTEM
P&ID
TANK DRAIN PUMP

DESIGNED: BLB, KEZ
DETAILED: PVR
CHECKED: JSM, BDS
APPROVED: BLB
DATE: 5/19/2020

0 1/2 1
IF THIS BAR DOES NOT MEASURE 1" THEN DRAWING IS NOT TO FULL SCALE

PROJECT NO.
400530

32-I-007
SHEET
113 OF 412

PLOTTED: 5/18/2020 4:20:30 PM
D400530

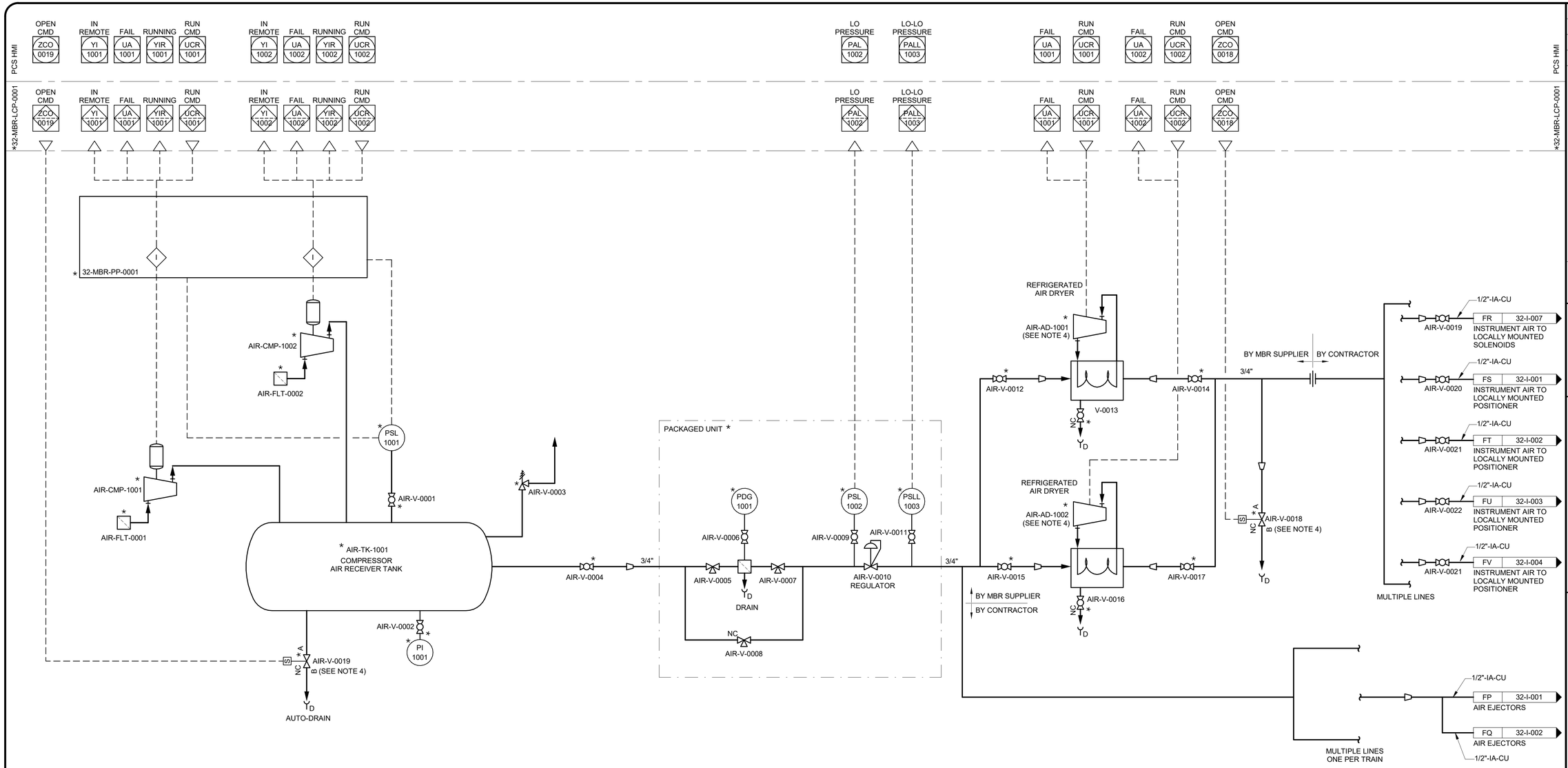

NOTES:

1. SEE LEGEND AND ABBREVIATIONS ON DRAWINGS 00-I-001, 00-I-002 AND 00-I-003.
2. AREA CODE IS 32 UNLESS OTHERWISE NOTED. SYSTEM CODE IS AIR UNLESS OTHERWISE NOTED.
3. COMPRESSOR PACKAGE PROVIDED BY THE MBR SYSTEM SUPPLIER.
4. 120 VAC POWER SUPPLY FROM 32-MBR-PP-0001 PANEL.

* ITEM FURNISHED BY MBR SYSTEM SUPPLIER.

NO.	BY	CHK	APP'D	DATE	REVISIONS AND RECORD OF ISSUE
0	BLB	JSM	BLB	5/19/2020	ISSUED FOR CONSTRUCTION

REGISTERED PROFESSIONAL ENGINEER
BRIAN L. BUTLER
No. E 16569
ELECTRICAL
STATE OF CALIFORNIA

BLACK & VEATCH JOINT VENTURE
BLACK & VEATCH
FILANC

CITY OF MORRO BAY
MORRO BAY WATER RECLAMATION FACILITY (WRF)

P&ID
MBR AREA - AIR COMPRESSOR SYSTEM

DESIGNED: BLB, KEZ
DETAILED: VSD
CHECKED: JSM, BDS
APPROVED: BLB
DATE: 5/19/2020

0 1/2 1
IF THIS BAR DOES NOT MEASURE 1" THEN DRAWING IS NOT TO FULL SCALE

PROJECT NO. 400530

32-I-008
SHEET 114 OF 412

PLOTTED: 5/18/2020 4:20:50 PM
D400530

PCS HMI

31-CTRL-RIO-0001

LO-LO LEVEL LALL 0101 | HI-HI LEVEL LAHH 0101 | LEVEL LI 0101

LO-LO LEVEL LALL 0201 | LEVEL LI 0201 | HI-HI LEVEL LAHH 0201

NH3 AI 0001 | FAIL UA 0001

RO FEED MANIFOLD ANALYZER PANEL NO. 1

120V — AIT 0001 NH3 — AE 0001 NH3 → Y_D — FG 0001 — RO-V-0002 — RO-V-0001 — 1/2"-MFF-PVC-02

1/2"-NACL-TEFL

2"-NACL-CPVC-02

UC | 90-I-001
SODIUM HYPOCHLORITE

1"-NACL-CPVC-02

NACL-V-0011 NACL-V-0012 NACL-V-0013

US | 90-I-009
LIQUID AMMONIUM SULFATE

2"-LAS-CPVC-02

1/2"-LAS-PVC-02

1"-LAS-PVC-02

A/G B/G 18"-MFF-HDPE → GB | 51-I-001
TO RO FEED

RO FEED TANK 1
RO-T-0101

RO FEED TANK 2
RO-T-0201

12"-MFF-PVC-02

FL | 32-I-005
FROM MBR FILTRATE MANIFOLD

12"-MFF-PVC-02

RO-V-0101

LIT 0101 — RO-V-0102

LSHH 0101 — RO-V-0106

LSLL 0101 — RO-V-0105

RO-V-0104 — 3"-DRN-PVC-02 — TO SEWER

12"-MFF-PVC-02 — RO-V-0103 — 12"-MFF-PVC-02

RO-V-0201

LIT 0201 — RO-V-0202

LSHH 0201 — RO-V-0206

LSLL 0201 — RO-V-0205

RO-V-0204 — 3"-DRN-PVC-02 — TO SEWER

12"-MFF-PVC-02 — RO-V-0203 — 12"-MFF-PVC-02

LAS-V-0001 LAS-V-0002 LAS-V-0003

18"-MFF-PVC-02 — 4"-PRW-PVC-02 → GA | 34-I-001
TO RECYCLED WATER PUMPS

A/G B/G 12"-MFF-HDPE → GC | 64-I-001
TO OUTFALL BALANCING TANK

12"-MFF-PVC-02

NOTES:

1. SEE LEGEND AND ABBREVIATIONS ON DRAWINGS 00-I-001, 00-1-002 AND 00-1-003.
2. AREA CODE IS 33 UNLESS OTHERWISE NOTED. SYSTEM CODE IS RO UNLESS OTHERWISE NOTED.
3. LOCAL CONTROL DEVICES SUCH AS INDICATING LIGHTS AND SWITCHES, LOCATED ON MCCs OR AT DRIVEN EQUIPMENT, MAY NOT BE SHOWN ON THIS P&ID.

* AMMONIA ANALYZER PROVIDED BY MBR SYSTEM SUPPLIER AND SHIPPED LOOSE.

NO.	BY	CHK	APP
0	BLB	JSM	BLB

REVISIONS AND RECORD OF USE

ISSUED FOR CONSTRUCTION — 5/19/2020

DATE

REGISTERED PROFESSIONAL ENGINEER — BRIAN L. BUTTERS — No. E 16569 — ELECTRICAL — STATE OF CALIFORNIA

BLACK & VEATCH

JOINT VENTURE

BLACK & VEATCH

FILANC

CITY OF MORRO BAY
MORRO BAY WATER
RECLAMATION FACILITY (WRF)

TREATMENT AREA - RO FEED TANKS
P&ID
RO FEED TANKS

DESIGNED: BLB, KEZ
DETAILED: PVR
CHECKED: JSM, BDS
APPROVED: BLB
DATE: 5/19/2020

0 1/2 1
IF THIS BAR DOES NOT MEASURE 1" THEN DRAWING IS NOT TO FULL SCALE

PROJECT NO.
400530

33-I-001
SHEET
115 OF 412

PLOTTED: 5/19/2020 12:13:43 PM
D400530

PCS HMI

31-CTRL-RIO-0001

RUNNING YIR 0201 | FAIL UA 0201 | SPEED FEEDBACK SI 0201 | HI PRESSURE PAH 0201

RUNNING YIR 0101 | FAIL UA 0101 | SPEED FEEDBACK SI 0101 | HI PRESSURE PAH 0101

RUNNING YIR 0301 | FAIL UA 0301 | SPEED FEEDBACK SI 0301 | HI PRESSURE PAH 0301 | BACKUP EMERGENCY POWER UCA 0001 | FLOW FI 0001 | ALARM YA 0001

480V

34-PRW-LCP-0001
(WITH LOCAL STARTER/DRIVE)

TESTING TAP

PRW-V-0102

3"-PRW-PVC-02

PRW-V-0101

2"-PRW-DIP

2"-PRW-DIP

4"-PRW-DIP

PLANT RECYCLED WATER PUMP
PRW-P-0101

PSH 0102

PG 0102

PRW-V-0104

PRW-V-0103

PRW-V-0105

PRW-V-0106

PRW-V-0108

PRW-V-0107

PRW-V-0005

PG 0001

AIR BLADDER STORAGE TANK
PRW-T-0001

4"-PRW-PVC-02

PRW-V-0001

24V

FIT 0001

FE 0001

PIT 0001

PRW-V-0006

PRW-V-0004

M

3"

A/G

B/G

4"-PRW-DIP

4"-PRW-PVC-02

34-PRW-BFP-0001

TO SITE IRRIGATION

GA 33-I-001
FROM RO FEED TANKS

4"-PRW-PVC-02

NACL-V-0003

NACL-V-0002

NACL-V-0001

2"-NACL-CPVC-02

1"-NACL-CPVC-02

1/2"-NACL-TEFL-01

UH 90-I-002
FROM SODIUM HYPOCHLORITE

TESTING TAP

PRW-V-0202

3"-PRW-PVC-02

PRW-V-0201

2"-PRW-DIP

2"-PRW-DIP

4"-PRW-DIP

PLANT RECYCLED WATER PUMP
PRW-P-0201

PSH 0202

PG 0202

PRW-V-0204

PRW-V-0203

PRW-V-0205

PRW-V-0206

PRW-V-0208

PRW-V-0207

TESTING TAP

PRW-V-0302

3"-PRW-PVC-02

PRW-V-0301

2"-PRW-DIP

2"-PRW-DIP

4"-PRW-DIP

PLANT RECYCLED WATER PUMP
PRW-P-0301

PSH 0302

PG 0302

PRW-V-0304

PRW-V-0303

PRW-V-0305

PRW-V-0306

PRW-V-0308

PRW-V-0307

4"-PRW-PVC-02

2"-PRW-PVC-02 HB 22-I-001 — TO HEADWORKS - FINE SCREEN

2"-PRW-PVC-02 HC 23-I-001 — TO ODOR CONTROL

3"-PRW-PVC-02 HD 31-I-001 — TO BNR

2"-PRW-PVC-02 HE 32-I-001 — TO MBR

2"-PRW-PVC-02 HF 62-I-001 — TO PRODUCT WATER SYSTEM

2"-PRW-PVC-02 HG 71-I-001 — TO SLUDGE HOLDING TANKS

2"-PRW-PVC-02 HH 72-I-001 — TO DEWATERING FACILITY

2"-PRW-PVC-02 HK 72-I-002 — TO BELT FILTER PRESS WASHWATER PUMP

2"-PRW-PVC-02 HI 73-I-001 — TO SAFE FILTER FACILITY

2"-PRW-PVC-02 HJ 90-I-001 — TO CHEMICAL FACILITY

2"-PRW-PVC-02 HA 21-I-001 — TO HEADWORKS

2"-PRW-PVC-02 — TO VACTOR WASHDOWN HOSE BIBB

2"-PRW-PVC-02 — TO WASH RACK AREA

PACKAGED SYSTEM *

NOTES:

1. SEE LEGEND AND ABBREVIATIONS ON DRAWING 00-I-001, 00-I-002 AND 00-I-003.
2. AREA CODE IS 34 UNLESS OTHERWISE NOTED. SYSTEM CODE IS PRW UNLESS OTHERWISE NOTED.
3. LOCAL CONTROL DEVICES SUCH AS INDICATING LIGHTS AND SWITCHES, LOCATED IN MCC's OR AT DRIVEN EQUIPMENT MAY NOT INDICATED ON THIS P&ID.
4. PUMPS AND TANKS TO BE PROVIDED AS A SINGLE PACKAGED SYSTEM.

NO.	BY	CHK	APP
0	BLB	JSM	BLB

REVISIONS AND RECORD OF USE

ISSUED FOR CONSTRUCTION — 5/19/2020

DATE

REGISTERED PROFESSIONAL ENGINEER
BRIAN L. BUTLER
No. E 16569
ELECTRICAL
STATE OF CALIFORNIA

BLACK & VEATCH

JOINT VENTURE

FILANC

BLACK & VEATCH

CITY OF MORRO BAY
MORRO BAY WATER
RECLAMATION FACILITY (WRF)

TREATMENT AREA - PLANT RECYCLED WATER PUMP STATION
P&ID
PLANT RECYCLED WATER PUMPS

DESIGNED: BLB, KEZ
DETAILED: PVR
CHECKED: JSM, BDS
APPROVED: BLB
DATE: 5/19/2020

0 1/2 1
IF THIS BAR DOES NOT MEASURE 1" THEN DRAWING IS NOT TO FULL SCALE

PROJECT NO.
400530

34-I-001
SHEET
116 OF 412

PLOTTED: 5/18/2020 4:20:52 PM
D400530

PCS HMI

FLOW LOW FAL 0001 | COND FAULT FA 0001 | COND AI 0001 | TURB FAULT FA 0002 | TURB AI 0002 | ORP FAULT FA 0003 | ORP AI 0003 | CL2 FAULT FA 0004 | FREE CL2 AI 0004 | NH3 FAULT FA 0005 | NH3 AI 0005 | pH FAULT FA 0006 | pH AI 0006 | TEMP AI 0006 | TOC FAULT FA 0007 | TOC AI 0007 | FLOW FI 0001 | RUNNING YIR 0001 | FAIL UA 0001 | RUN CMD UCR 0001 | IN REMOTE YI 0012 | OPENED ZIO 0012 | CLOSED ZIC 0012 | OPEN CMD ZCO 0012 | CLOSE CMD ZCC 0012

51-CTRL-RIO-0001

FLOW LOW FAL 0001 | COND FAULT FA 0001 | COND AI 0001 | TURB FAULT FA 0002 | TURB AI 0002 | ORP FAULT FA 0003 | ORP AI 0003 | CL2 FAULT FA 0004 | FREE CL2 AI 0004 | NH3 FAULT FA 0005 | NH3 AI 0005 | pH FAULT FA 0006 | pH AI 0006 | TEMP AI 0006 | TOC FAULT FA 0007 | TOC AI 0007 | FLOW FI 0001 | RUNNING YIR 0001 | FAIL UA 0001 | RUN CMD UCR 0001 | IN REMOTE YI 0012 | OPENED ZIO 0012 | CLOSED ZIC 0012 | OPEN CMD ZCO 0012 | CLOSE CMD ZCC 0012

PCS HMI

51-CTRL-RIO-0001

AIT 0001 COND | AIT 0002 TURB | AIT 0003 ORP | AIT 0004 FREE CL2 (NOTE 5) | AIT 0005 MONOCHLORIMINE/ AMMONIA | AIT 0006 pH | AIT 0007 TOC

AE 0001 COND | AE 0002 TURB | AE 0003 ORP | AE 0004 FREE CL2 | AE 0005 MONO-CHLORIMINE / AMMONIA | AE 0006 pH | AE 0007 TOC

RO-V-0003 | RO-V-0004 | RO-V-0005 | RO-V-0006 | RO-V-0007 | RO-V-0008 | RO-V-0010

FSL 0001 | FI 0001 | FI 0002 | FI 0003 | FI 0004 | FI 0005 | FI 0006 | FI 0007

120V

RO-V-0009

RO-V-00013

RO-V-0002

RO FEED ANALYZER PANEL

HS 0012 LOR | HS 0012 OSC | ZLC 0012 | ZLO 0012 | ZSC 0012 | ZSO 0012

480V

VALVE ACTUATOR

LCP WITH LOCAL STARTER — 120V

FURNISHED BY SAMPLE PUMP SUPPLIER.

SAMPLE PUMP RO-P-0001

RO-V-0001

RO-V-0011

RO-V-0010

RO-V-0012

8"-ROF-PVC-02

IA 64-I-001 RO TO OCEAN OUTFALL TANK

6"-ROF-PVC-02

IB 51-I-002 RO FEED PUMP 1

6"-ROF-PVC-02

IC 51-I-002 RO FEED PUMP 2

6"-ROF-PVC-02

ID 51-I-002 RO FEED PUMP 3

24V — FIT 0001 — FE 0001

10"-ROF-PVC-02

12"-ROF-PVC-02

12"-ROF-PVC-02

B/G A/G

GB 33-I-001 RO FEED TANKS

18"-MFF-HDPE

18"-MFF-PVC-02

12"-ROF-PVC-02

HSO4-V-0003

HSO4-V-0002

HSO4-V-0001

1"-SA-CPVC-02

2"-SA-CPVC-02

1/2"-SA-TEFL-01

UP 90-I-007 SULFURIC ACID

STATIC MIXER RO-MXS-0001

STATIC MIXER RO-MXS-0002

ANTI-V-0003

ANTI-V-0002

ANTI-V-0001

UM 90-I-005 ANTISCALANT

1/2"-ANTI-PE-06

1"-ANTI-CPVC-02

2"-ANTI-CPVC-02

NOTES:

1. SEE LEGEND AND ABBREVIATIONS ON DRAWINGS 00-I-001, 00-1-002 AND 00-1-003
2. AREA CODE IS 51 UNLESS OTHERWISE NOTED. SYSTEM CODE IS RO UNLESS OTHERWISE NOTED.
3. LOCAL CONTROL DEVICES SUCH AS INDICATING LIGHTS AND SWITCHES, LOCATED ON MCCs OR AT DRIVEN EQUIPMENT, MAY NOT BE SHOWN ON THIS P&ID.
4. ALL INSTRUMENTS SHOWN AS PANEL MOUNTED ON THIS DRAWINGS ARE LOCATED ON THE RO FEEDWATER INSTRUMENT PANEL MOUNTED ON THIS DRAWING ARE LOCATED ON THE RO FEEDWATER INSTRUMENT PANEL, SHOWN ON DWG. 00-I-505.
5. INSTRUMENT TO BE TITRATING TYPE NOT PROBE TYPE.

NO.	BY	CHK	APP'D
0	BLB	JSM	BLB

REVISIONS AND RECORD OF USE

ISSUED FOR CONSTRUCTION — 5/19/2020

DATE

REGISTERED PROFESSIONAL ENGINEER — BRIAN L. BUTLER — No. E 16569 — ELECTRICAL — STATE OF CALIFORNIA

BLACK & VEATCH

JOINT VENTURE

BLACK & VEATCH

FILANC

CITY OF MORRO BAY
MORRO BAY WATER
RECLAMATION FACILITY (WRF)

RO/UV BUILDING - RO SYSTEM
P&ID
RO FEED CONDITIONING SYSTEM

DESIGNED: BLB, KEZ
DETAILED: PVR
CHECKED: JSM, BDS
APPROVED: BLB
DATE: 5/19/2020

0 1/2 1

IF THIS BAR DOES NOT MEASURE 1" THEN DRAWING IS NOT TO FULL SCALE

PROJECT NO. 400530

51-I-001

SHEET 117 OF 412

PLOTTED: 5/19/2020 12:07:22 PM

D400530

TYPICAL I/O & CONTROLS FOR ON-OFF VALVE 51-RO-V-0107, 51-RO-V-0207

IN REMOTE YI 0307 | OPENED ZIO 0307 | CLOSED ZIC 0307 | OPEN CMD ZCO 0307 | CLOSE CMD ZCC 0307

PCS HMI | DIFF. PRESSURE DPI 0303 | LO PRESSURE PAL 0301 | HI PRESSURE PAH 0301 | IN REMOTE YI 0301 | RUNNING YIR 0301 | FAIL UA 0301 | RUN CMD UCR 0301 | RESET CMD UC 0301 | SPEED FEEDBACK SI 0301 | SPEED SETPT SC 0301 | PCS HMI

*51-RO-RIO-0301 | IN REMOTE YI 0307 | OPENED ZIO 0307 | CLOSED ZIC 0307 | OPEN CMD ZCO 0307 | CLOSE CMD ZCC 0307 | DIFF. PRESSURE DPI 0303 | LO PRESSURE PAL 0301 | HI PRESSURE PAH 0301 | IN REMOTE YI 0301 | RUNNING YIR 0301 | FAIL UA 0301 | RUN CMD UCR 0301 | RESET CMD UC 0301 | SPEED FEEDBACK SI 0301 | SPEED SETPT SC 0301 | *51-RO-RIO-0301

PCS HMI | LO PRESSURE PAL 0101 | HI PRESSURE PAH 0101 | IN REMOTE YI 0101 | RUNNING YIR 0101 | FAIL UA 0101 | RUN CMD UCR 0101 | RESET CMD UC 0101 | SPEED FEEDBACK SI 0101 | SPEED SETPT SC 0101 | DIFF. PRESSURE DPI 0103 | PCS HMI

*51-RO-RIO-0101 | LO PRESSURE PAL 0101 | HI PRESSURE PAH 0101 | IN REMOTE YI 0101 | RUNNING YIR 0101 | FAIL UA 0101 | RUN CMD UCR 0101 | RESET CMD UC 0101 | SPEED FEEDBACK SI 0101 | SPEED SETPT SC 0101 | DIFF. PRESSURE DPI 0103 | *51-RO-RIO-0101

PCS HMI | LO PRESSURE PAL 0201 | HI PRESSURE PAH 0201 | IN REMOTE YI 0201 | RUNNING YIR 0201 | FAIL UA 0201 | RUN CMD UCR 0201 | RESET CMD UC 0201 | SPEED FEEDBACK SI 0201 | SPEED SETPT SC 0201 | DIFF. PRESSURE DPI 0203 | PCS HMI

*51-RO-RIO-0201 | LO PRESSURE PAL 0201 | HI PRESSURE PAH 0201 | IN REMOTE YI 0201 | RUNNING YIR 0201 | FAIL UA 0201 | RUN CMD UCR 0201 | RESET CMD UC 0201 | SPEED FEEDBACK SI 0201 | SPEED SETPT SC 0201 | DIFF. PRESSURE DPI 0203 | *51-RO-RIO-0201

480V

HS 0307 LOR HS 0307 OSC ZLC 0307 ZLO 0307 ZSC 0307 ZSO 0307

VALVE ACTUATOR

* 51-RO-VFD-0301

* 51-RO-VFD-0101

* 51-RO-VFD-0201

PROVIDED BY RO SYSTEM SUPPLIER

OO HS HS E-STOP

PG 0102 PSH 0102 RO-V-0105

PG 0101 PSL 0101 RO-V-0102

6"-ROF-SS-05

RO-V-0103 SDI CONNECTION RO-V-0104

RO-V-0106

RO-V-0109 RO-V-0111 RO-V-0108 RO-V-0110 6"-ROF-SS-05

IE 51-I-003 TO RO SYSTEM 1

RO-V-0116 RO CARTRIDGE FILTER NO. 1 RO-FLC-0101

PDIT 0103 RO-V-0112 RO-V-0113 RO-V-0114 RO-V-0115

IB 51-I-001 FROM RO FEED SUPPLY

6"-ROF-PVC-02

RO-V-0101

6"-ROF-SS-05

RO FEED PUMP RO-P-0101

SEE TYPICAL I/O & CONTROLS

M SS PVC

RO-V-0107

4"-FF-PVC-02

51-I-011 JH FROM RO FLUSH PUMPS

OO HS HS E-STOP

PG 0202 PSH 0202 RO-V-0205

PG 0201 PSL 0201 RO-V-0202

6"-ROF-SS-05

RO-V-0203 SDI CONNECTION RO-V-0204

RO-V-0206

RO-V-0209 RO-V-0211 RO-V-0208 RO-V-0210 6"-ROF-SS-05

IF 51-I-004 TO RO SYSTEM 2

RO-V-0216 RO CARTRIDGE FILTER NO. 2 RO-FLC-0201

PDIT 0203 RO-V-0212 RO-V-0213 RO-V-0214 RO-V-0215

IC 51-I-001 FROM RO FEED SUPPLY

6"-ROF-PVC-02

RO-V-0201

6"-ROF-SS-05

RO FEED PUMP RO-P-0201

SEE TYPICAL I/O & CONTROLS

M SS PVC

RO-V-0207

4"-FF-PVC-02

51-I-011 JI FROM RO FLUSH PUMPS

OO HS HS E-STOP

PG 0302 PSH 0302 RO-V-0305

PG 0301 PSL 0301 RO-V-0302

6"-ROF-SS-05

RO-V-0303 SDI CONNECTION RO-V-0304

RO-V-0306

RO-V-0309 RO-V-0311 RO-V-0308 RO-V-0310 6"-ROF-SS-05

IG 51-I-005 TO RO SYSTEM 3

RO-V-0316 RO CARTRIDGE FILTER NO. 3 RO-FLC-0003

PDIT 0303 RO-V-0312 RO-V-0313 RO-V-0314 RO-V-0315

ID 51-I-001 FROM RO FEED SUPPLY

6"-ROF-PVC-02

RO-V-0301

6"-ROF-SS-05

RO FEED PUMP RO-P-0301

M SS PVC

RO-V-0307

4"-FF-PVC-02

51-I-011 JJ FROM RO FLUSH PUMPS

NOTES:

1. SEE LEGEND AND ABBREVIATIONS ON DRAWINGS 00-I-001, 00-I-002 AND 00-I-003.
2. AREA CODE IS 51 UNLESS OTHERWISE NOTED. SYSTEM CODE IS RO UNLESS OTHERWISE NOTED.
3. LOCAL CONTROL DEVICES SUCH AS INDICATING LIGHTS AND SWITCHES, LOCATED ON MCC's OR AT DRIVEN EQUIPMENT, MAY NOT BE SHOWN ON THIS P&ID.
4. INSTRUMENTATION AND CONTROLS ARE TYPICAL FOR VARIABLE SPEED DRIVES FOR RO FEED PUMPS. NOT ALL PANEL COMPONENTS SHOWN. SEE SPECIFICATION FOR REQUIREMENTS.
5. PIPING SIZES ARE PRELIMINARY AND TO BE FINALIZED BY ROSS.

* INDICATES ITEM FURNISHED BY ROSS (REVERSE OSMOSIS SYSTEM SUPPLIER).

NO.	BY	CHK	APP
0	BLB	JSM	BLB

REVISIONS AND RECORD OF USE

5/19/2020 ISSUED FOR CONSTRUCTION

DATE

REGISTERED PROFESSIONAL ENGINEER BRIAN L. BUTLER No. E 16569 ELECTRICAL STATE OF CALIFORNIA

BLACK & VEATCH JOINT VENTURE BLACK & VEATCH FILANC

CITY OF MORRO BAY
MORRO BAY WATER RECLAMATION FACILITY (WRF)

RO/UV BUILDING - RO SYSTEM P&ID
RO CARTRIDGE FILTERS

DESIGNED: BLB, ADV
DETAILED: PVR
CHECKED: JSM, BDS
APPROVED: BLB
DATE: 5/19/2020

0 1/2 1

IF THIS BAR DOES NOT MEASURE 1" THEN DRAWING IS NOT TO FULL SCALE

PROJECT NO. 400530

51-I-002

SHEET 118 OF 412

PLOTTED: 5/18/2020 5:12:01 PM

D400530

PCS HMI

*51-RO-RIO-0101

IN REMOTE YI 1001 | OPENED ZIO 1001 | CLOSED ZIC 1001 | OPEN CMD ZCO 1001 | CLOSE CMD ZCC 1001

PRESSURE PI 1001 | PRESSURE PI 1003

PRESSURE PI 1004 | PRESSURE PI 1002 | PRESSURE PI 1005 | COND AI 1001 | FAIL YA 1001

FLOW FI 1001 | COND AI 1002 | FAIL UA 1002

IN REMOTE YI 1001 | RUNNING YIR 1001 | FAIL YA 1001 | RUN CMD UCR 1001 | RESET CMD UC 1001 | SPEED FEEDBACK SI 1001 | SPEED SETPT SC 1001

NOTE 6

VESSEL PERMEATE SAMPLE , TYP (NOTE 5)

FEED SAMPLE

RO-V-1005

RO-V-1008

STAGE 1 REJECT SAMPLE BIB (NOTE 5)

5-WAY VALVE

PG 1001

RO-V-1023

VESSEL PERMEATE SAMPLE BIB, TYP (NOTE 5)

STAGE 2 REJECT SAMPLE BIB (NOTE 5)

RO TRAIN INSTRUMENT AND SAMPLE PANEL

RO-V-1014

RO-V-1024

HS 1001 LOR | HS 1001 OSC | ZLC 1001 | ZLO 1001 | ZSC 1001 | ZSO 1001

480V

VALVE ACTUATOR

INTEGRAL SAMPLE DRAIN TROUGH TO FLOOR DRAIN

* 51-RO-VFD-1001

PROVIDED BY RO SYSTEM SUPPLIER

PIT 1001

RO-V-1004

AIT 1001 COND 24V

PIT 1002

AE 1001 COND

RUPTURE DISC

RO-RD-1001

4"-ROP-CPVC-02

II 51-I-006 TO RO TRAIN 1 PERMEATE SYSTEM

IE 51-I-002 RO FEED PUMP 1

6"-ROF-SS-05

M

RO-V-1001

6"-ROF-SS-05

RO-V-1003

REVERSE OSMOSIS MEMBRANE STAGE 1 RO

RO-V-1010

RO-V-1011

RO-V-1012

RO-V-1009

RO-V-1012

RO-V-1013

AIT 1002 COND 24V

FIT 1001 24V

AE 1002 COND

FE 1001

M 2 1/2"

RO-V-1002

SS CPVC

PIT 1004

RO-V-1020

REVERSE OSMOSIS MEMBRANE STAGE 2 RO

4"-ROF-SS-05

2 1/2"-ROP-CPVC-02

RO-V-1030

RO-V-1022

RO-V-1029

6"-ROC-SS-05

2 1/2"-ROC-SS-12

PIT 1003

RO-V-1016

PIT 1005

RO-V-1026

RO-V-1027

2 1/2"-ROC-SS-12

NOTE 10

IJ 51-I-006 TO RO TRAIN 1 CONCENTRATE SYSTEM

RO-V-1028

6"-CIPS-CPVC-02

RO-V-1017

RO-V-1021

RO-V-1025

RO-V-1015

SS CPVC

SS CPVC

SS CPVC

4"-ROC-SS-05

6"-CIPR-CPVC-02

4"-ROC-SS-05

RO-V-1019

PG 1004

RO-V-1018

4"-ROC-SS-05

BOOSTER PUMP RO-P-1001

JE 51-I-010 FROM CIP PUMPS

6"-CIPS-CPVC-02

CIP SOLUTION SUPPLY

4"-CIPS-CPVC-02

IK 51-I-004 RO CLEANING RETURN FROM TRAIN 2

6"-CIPR-CPVC-02

IN 51-I-005 RO CLEANING RETURN FROM TRAIN 3

6"-CIPR-CPVC-02

51-I-010 IH RO CLEANING RETURN

6"-CIPR-CPVC-02

CIP SOLUTION RETURN

4"-CIPR-CPVC-02

NOTES:

1. SEE LEGEND AND ABBREVIATIONS ON DRAWINGS 00-I-001, 00-I-00 AND 00-I-003.
2. AREA CODE IS 51 UNLESS OTHERWISE NOTED. SYSTEM CODE IS RO UNLESS OTHERWISE NOTED.
3. LOCAL CONTROL DEVICES SUCH AS INDICATING LIGHTS AND SWITCHES, LOCATED ON MCCs OR AT DRIVEN EQUIPMENT, MAY NOT BE SHOWN ON THIS P&ID.
4. TAG NUMBER FOR RO TRAINS 2,3, AND 4 SHALL FOLLOW THE SAME TAGGING SCHEME FOR RO TRAIN 1. FOR EXAMPLE CIP INTERCONNECT VALVE VBF-2314 SHALL BE TAGGED VBF-2324 FOR TRAIN 2, VBF-2334 FOR TRAIN 3, AND VBF-2344 FOR TRAIN 4.
5. ONE SAMPLE VALVE PER VESSEL.
6. ALL INSTRUMENTS (INCLUDING VALVE INDICATORS AND CONTROLS) SHOWN AS PANEL MOUNTED ON THIS DRAWING ARE LOCATED ON THE RO TRAIN INSTRUMENT CONTROL PANEL.
7. NOT ALL CIP VALVES AND PIPING ARE INDICATED ON THE DRAWING.
8. RO SKID TO BE EQUIPPED WITH VALVES AT LOW POINTS TO PROVIDE ADAQUATE DRAINING.
9. PIPING SIZES ARE PRELIMINARY AND TO BE FINALIZED BY ROSS.
10. HIGH PRESSURE SECOND STAGE CONCENTRATE PIPING TO BE DUPLEX STAINLESS STEEL, REFER TO SPECIFICATIONS.

NO.	BY	CHK	APP
0	BLB	JSM	BLB

REVISIONS AND RECORD OF USE

ISSUED FOR CONSTRUCTION 5/19/2020

DATE

REGISTERED PROFESSIONAL ENGINEER BRIAN L. BUTLER No. E 16569 ELECTRICAL STATE OF CALIFORNIA

BLACK & VEATCH JOINT VENTURE BLACK & VEATCH FILANC

CITY OF MORRO BAY
MORRO BAY WATER RECLAMATION FACILITY (WRF)

RO/UV BUILDING - RO SYSTEM
P&ID
RO UNIT 1

DESIGNED: BLB, ADV
DETAILED: PVR
CHECKED: JSM, BDS
APPROVED: BLB
DATE: 5/19/2020

0 1/2 1

IF THIS BAR DOES NOT MEASURE 1" THEN DRAWING IS NOT TO FULL SCALE

PROJECT NO. 400530

51-I-003

SHEET 119 OF 412

PLOTTED: 5/18/2020 5:12:02 PM

D400530

PCS HMI

*51-RO-RIO-0201

IN REMOTE YI 2001 | OPENED ZIO 2001 | CLOSED ZIC 2001 | OPEN CMD ZCO 2001 | CLOSE CMD ZCC 2001

PRESSURE PI 2001 | PRESSURE PI 2003

PRESSURE PI 2004 | PRESSURE PI 2002 | PRESSURE PI 2005 | COND AI 2001 | FAIL YA 2001

FLOW FI 2001 | COND AI 2002 | FAIL YA 2002

IN REMOTE YI 2001 | RUNNING YIR 2001 | FAIL YA 2001 | RUN CMD UCR 2001 | RESET CMD UC 2001 | SPEED FEEDBACK SI 2001 | SPEED SETPT SC 2001

NOTE 6

HS 2001 LOR HS 2001 OSC | ZLC 2001 | ZLO 2001 | ZSC 2001 | ZSO 2001

480V

VALVE ACTUATOR

VESSEL PERMEATE SAMPLE, TYP (NOTE 5)

FEED SAMPLE

RO-V-2005

RO-V-2008

STAGE 1 REJECT SAMPLE BIB (NOTE 5)

RO-V-2014

5-WAY VALVE

* PG 2001

RO-V-2023

VESSEL PERMEATE SAMPLE BIB, TYP (NOTE 5)

STAGE 2 REJECT SAMPLE BIB (NOTE 5)

RO-V-2024

RO TRAIN INSTRUMENT AND SAMPLE PANEL

INTEGRAL SAMPLE DRAIN TROUGH TO FLOOR DRAIN

I

* 51-RO-VFD-2001

* PIT 2001

RO-V-2004

RO-V-2003

* PIT 2002

* AIT 2001 COND 24V

* AE 2001 COND

YD

RUPTURE DISC

RO-RD-2001

PROVIDED BY RO SYSTEM SUPPLIER

4"-ROP-CPVC-02

IL | 51-I-007

TO RO TRAIN 2 PERMEATE SYSTEM

IF | 51-I-002

RO FEED PUMP 2

6"-ROF-SS-05

M

RO-V-2001

6"-ROF-SS-05

REVERSE OSMOSIS MEMBRANE STAGE 1 RO

RO-V-2010

RO-V-2011

RO-V-2012

RO-V-2009

RO-V-2012

RO-V-2013

* AIT 2002 COND 24V

* FIT 2001 24V

* AE 2002 COND

YD

FE 2001

M

2 1/2"

RO-V-2030

RO-V-2002

SS

CPVC

* PIT 2004

RO-V-2020

4"-ROF-SS-05

RO-V-2022

REVERSE OSMOSIS MEMBRANE STAGE 2 RO

2 1/2"-ROP-CPVC-02

RO-V-2029

6"-ROC-SS-05

6"-CIPS-CPVC-02

* PIT 2003

RO-V-2016

* PIT 2005

RO-V-2026

RO-V-2027

2 1/2"-ROC-SS-12

NOTE 10

RO-V-2028

2 1/2"-ROC-SS-12

IM | 51-I-007

TO RO TRAIN 2 CONCENTRATE SYSTEM

RO-V-2017

RO-V-2015

SS

CPVC

RO-V-2021

RO-V-2025

SS

CPVC

SS

CPVC

4"-ROC-SS-05

6"-CIPR-CPVC-02

4"-ROC-SS-05

RO-V-2019

* PG 2004

RO-V-2018

4"-ROC-SS-05

BOOSTER PUMP RO-P-2001

JF | 51-I-010

FROM CIP PUMPS

6"-CIPS-CPVC-02

CIP SOLUTION SUPPLY

4"-CIPS-CPVC-02

51-I-003 | IK

RO CLEANING SOLUTION RETURN

6"-CIPR-CPVC-02

CIP SOLUTION RETURN

4"-CIPR-CPVC-02

NOTES:

1. SEE LEGEND AND ABBREVIATIONS ON DRAWINGS 00-I-001, 00-I-00 AND 00-I-003.
2. AREA CODE IS 51 UNLESS OTHERWISE NOTED. SYSTEM CODE IS RO UNLESS OTHERWISE NOTED.
3. LOCAL CONTROL DEVICES SUCH AS INDICATING LIGHTS AND SWITCHES, LOCATED ON MCCs OR AT DRIVEN EQUIPMENT, MAY NOT BE SHOWN ON THIS P&ID.
4. TAG NUMBER FOR RO TRAINS 2,3, AND 4 SHALL FOLLOW THE SAME TAGGING SCHEME FOR RO TRAIN 1. FOR EXAMPLE CIP INTERCONNECT VALVE VBF-2314 SHALL BE TAGGED VBF-2324 FOR TRAIN 2, VBF-2334 FOR TRAIN 3, AND VBF-2344 FOR TRAIN 4.
5. ONE SAMPLE VALVE PER VESSEL.
6. ALL INSTRUMENTS (INCLUDING VALVE INDICATORS AND CONTROLS) SHOWN AS PANEL MOUNTED ON THIS DRAWING ARE LOCATED ON THE RO TRAIN INSTRUMENT CONTROL PANEL.
7. NOT ALL CIP VALVES AND PIPING ARE INDICATED ON THE DRAWING.
8. RO SKID TO BE EQUIPPED WITH VALVES AT LOW POINTS TO PROVIDE ADAQUATE DRAINING.
9. PIPING SIZES ARE PRELIMINARY AND TO BE FINALIZED BY ROSS.
10. HIGH PRESSURE SECOND STAGE CONCENTRATE PIPING TO BE DUPLEX STAINLESS STEEL, REFER TO SPECIFICATIONS.

* PROVIDED BY RO SYSTEM SUPPLIER

NO.	BY	CHK	APP
0	BLB	JSM	BLB

REVISIONS AND RECORD OF USE

ISSUED FOR CONSTRUCTION 5/19/2020

DATE

REGISTERED PROFESSIONAL ENGINEER BRIAN L. BUTLER No. E 16569 ELECTRICAL STATE OF CALIFORNIA

BLACK & VEATCH JOINT VENTURE BLACK & VEATCH FILANC

CITY OF MORRO BAY
MORRO BAY WATER RECLAMATION FACILITY (WRF)

RO/UV BUILDING - RO SYSTEM
P&ID
RO UNIT 2

DESIGNED: BLB, ADV
DETAILED: PVR
CHECKED: JSM, BDS
APPROVED: BLB
DATE: 5/19/2020

0 1/2 1

IF THIS BAR DOES NOT MEASURE 1" THEN DRAWING IS NOT TO FULL SCALE

PROJECT NO. 400530

51-I-004

SHEET 120 OF 412

PLOTTED: 5/18/2020 5:12:02 PM

D400530

PCS HMI

*51-RO-RIO-0301

IN REMOTE YI 3001 | OPENED ZIO 3001 | CLOSED ZIC 3001 | OPEN CMD ZCO 3001 | CLOSE CMD ZCC 3001

PRESSURE PI 3001 | PRESSURE PI 3003 | PRESSURE PI 3004 | PRESSURE PI 3002 | PRESSURE PI 3005 | COND AI 3001 | FAIL YA 3001

FLOW FI 3001 | COND AI 3002 | FAIL YA 3002

IN REMOTE YI 3001 | RUNNING YIR 3001 | FAIL YA 3001 | RUN CMD UCR 3001 | RESET CMD UC 3001 | SPEED FEEDBACK SI 3001 | SPEED SETPT SC 3001

NOTE 6

VESSEL PERMEATE SAMPLE, TYP (NOTE 5)

FEED SAMPLE

RO-V-3005

RO-V-3008

STAGE 1 REJECT SAMPLE BIB (NOTE 5)

5-WAY VALVE

* PG 3001

RO-V-3023

VESSEL PERMEATE SAMPLE BIB, TYP (NOTE 5)

STAGE 2 REJECT SAMPLE BIB (NOTE 5)

RO TRAIN INSTRUMENT AND SAMPLE PANEL

RO-V-3014

RO-V-3024

HS 3001 LOR | HS 3001 OSC | ZLC 3001 | ZLO 3001 | ZSC 3001 | ZSO 3001

480V

VALVE ACTUATOR

* PIT 3001

RO-V-3004

INTEGRAL SAMPLE DRAIN TROUGH TO FLOOR DRAIN

* AIT 3001 COND 24V

* PIT 3002

* AE 3001 COND

YD

* 51-RO-VFD-3001

PROVIDED BY RO SYSTEM SUPPLIER

RUPTURE DISC

RD-RD-3001

4"-ROP-CPVC-02

IO | 51-I-008

TO RO TRAIN 3 PERMEATE SYSTEM

RO-V-3010 | RO-V-3011 | RO-V-3012

RO-V-3009

RO-V-3012

RO-V-3013

RO-V-3003

REVERSE OSMOSIS MEMBRANE STAGE 1 RO

IG | 51-I-002

RO FEED PUMP 3

6"-ROF-SS-05

M

RO-V-3001

6"-ROF-SS-05

* AIT 3002 COND 24V

* FIT 3001 24V

* AE 3002 COND

YD

FE 3001

M

2 1/2"

RO-V-3030

RO-V-3002

SS

CPVC

* PIT 3004

RO-V-3020

REVERSE OSMOSIS MEMBRANE STAGE 2 RO

4"-ROF-SS-05

2 1/2"-ROP-CPVC-02

RO-V-3022

RO-V-3029

6"-ROC-SS-05

* PIT 3003

RO-V-3016

* PIT 3005

RO-V-3026

RO-V-3027

2 1/2"-ROC-SS-12

NOTE 10

RO-V-3028

IP | 51-I-008

TO RO TRAIN 3 CONCENTRATE SYSTEM

RO-V-3017

RO-V-3015

SS

CPVC

RO-V-3021 | RO-V-3025

SS

CPVC

SS

CPVC

6"-CIPR-CPVC-02

4"-ROC-SS-05

6"-CIPS-PVC-02

4"-ROC-SS-05

RO-V-3019

* PG 3004

RO-V-3018

JG | 51-I-010

FROM CIP PUMPS

6"-CIPS-CPVC-02

CIP SOLUTION SUPPLY

4"-CIPS-CPVC-02

4"-ROC-SS-05

BOOSTER PUMP RO-P-3001

51-I-003 | IN

RO CLEANING SOLUTION RETURN

6"-CIPR-CPVC-02

CIP SOLUTION RETURN

4"-CIPR-CPVC-02

NOTES:

1. SEE LEGEND AND ABBREVIATIONS ON DRAWINGS 00-I-001, 00-I-00 AND 00-I-003.
2. AREA CODE IS 51 UNLESS OTHERWISE NOTED. SYSTEM CODE IS RO UNLESS OTHERWISE NOTED.
3. LOCAL CONTROL DEVICES SUCH AS INDICATING LIGHTS AND SWITCHES, LOCATED ON MCCs OR AT DRIVEN EQUIPMENT, MAY NOT BE SHOWN ON THIS P&ID.
4. TAG NUMBER FOR RO TRAINS 2,3, AND 4 SHALL FOLLOW THE SAME TAGGING SCHEME FOR RO TRAIN 1. FOR EXAMPLE CIP INTERCONNECT VALVE VBF-2314 SHALL BE TAGGED VBF-2324 FOR TRAIN 2, VBF-2334 FOR TRAIN 3, AND VBF-2344 FOR TRAIN 4.
5. ONE SAMPLE VALVE PER VESSEL.
6. ALL INSTRUMENTS (INCLUDING VALVE INDICATORS AND CONTROLS) SHOWN AS PANEL MOUNTED ON THIS DRAWING ARE LOCATED ON THE RO TRAIN INSTRUMENT CONTROL PANEL.
7. NOT ALL CIP VALVES AND PIPING ARE INDICATED ON THE DRAWING.
8. RO SKID TO BE EQUIPPED WITH VALVES AT LOW POINTS TO PROVIDE ADAQUATE DRAINING.
9. PIPING SIZES ARE PRELIMINARY AND TO BE FINALIZED BY ROSS.
10. HIGH PRESSURE SECOND STAGE CONCENTRATE PIPING TO BE DUPLEX STAINLESS STEEL, REFER TO SPECIFICATIONS.

* PROVIDED BY RO SYSTEM SUPPLIER

NO.	BY	CHK	APP
0	BLB	JSM	BLB

REVISIONS AND RECORD OF USE

ISSUED FOR CONSTRUCTION

DATE 5/19/2020

REGISTERED PROFESSIONAL ENGINEER BRIAN L. BUTLER No. E 16569 ELECTRICAL STATE OF CALIFORNIA

BLACK & VEATCH JOINT VENTURE BLACK & VEATCH FILANC

CITY OF MORRO BAY
MORRO BAY WATER RECLAMATION FACILITY (WRF)

RO/UV BUILDING - RO SYSTEM
P&ID
RO UNIT 3

DESIGNED: BLB, ADV
DETAILED: PVR
CHECKED: JSM, BDS
APPROVED: BLB
DATE: 5/19/2020

0 1/2 1

IF THIS BAR DOES NOT MEASURE 1" THEN DRAWING IS NOT TO FULL SCALE

PROJECT NO. 400530

51-I-005

SHEET 121 OF 412

PLOTTED: 5/18/2020 5:12:03 PM

D400530

PCS HMI

*51-RO-RIO-0101

PRESSURE PI 1007 | HI PRESSURE PAH 1006 | PRESSURE PI 1006 | FLOW FI 1003 | IN REMOTE YI 1048 | OPENED ZIO 1048 | CLOSED ZIC 1048 | OPEN CMD ZCO 1048 | CLOSE CMD ZCC 1048 | FLOW FI 1002 | IN REMOTE YI 1047 | POSITION FEEDBACK ZI 1047 | POSITION SETPT ZC 1047 | OPENED ZIO 1047 | CLOSED ZIC 1047 | COND AI 1003 | FAIL YA 1003 | FAIL YA 1004 | COND AI 1004 | IN REMOTE YI 1040 | OPENED ZIO 1040 | CLOSED ZIC 1040 | OPEN CMD ZCO 1040 | CLOSE CMD ZCC 1040 | IN REMOTE YI 1042 | OPENED ZIO 1042 | CLOSED ZIC 1042 | OPEN CMD ZCO 1042 | CLOSE CMD ZCC 1042 | PRESSURE PI 1008

MOUNT ON RO TRAIN INSTRUMENT AND SAMPLE PANEL

PG 1006 | PSH 1006 | PIT 1006

NOTE 8 RO-V-1033 | NOTE 8 RO-V-1034

RO-V-1031 | RO-V-1032

4"-ROP-CPVC-02

II 51-I-003 FROM RO PERMEATE UNIT 1 VESSELS

FIT 1002 | FE 1002 | 24V | M | 4"

AIT 1003 COND | AE 1003 COND | 24V | Y_D

RO-V-1036 SAMPLE LINE | RO-V-1035 TO TRAIN SAMPLE/ANALYZER PANEL

CPVC-02 | PVC-02

RO-V-1054 | NOTE 5 | Y_D

2"-ROP-PVC-02

480V

HS 1040 | LOR | HS 1040 | OSC | ZLC 1040 | ZLO 1040 | ZSC 1040 | ZSO 1040

VALVE ACTUATOR

480V

HS 1042 | LOR | HS 1042 | OSC | ZLC 1042 | ZLO 1042 | ZSC 1042 | ZSO 1042

VALVE ACTUATOR

M

4"-ROP-CPVC-02 | RO-V-1039 | RO-V-1041 | 4"-ROP-PVC-02 | RO-V-1042 | 4"-ROP-PVC-02 | IQ 52-I-001 TO UV SYSTEM

REMOVABLE SPOOLS (NOTE 7)

M | 4"-ROP-PVC-02 | RO-V-1040 | 8"-ROP-PVC-02 | IR 64-I-001 TO OUTFALL BALANCING TANK

4"-ROP-PVC-02 | IV 51-I-007 FROM TRAIN 2

4"-ROP-PVC-02 | IZ 51-I-008 FROM TRAIN 3

4"-PCR-CPVC-02 | RO-V-1037 | RO-V-1038 | 4"-PCR-CPVC-02 | IS 51-I-009 RO TRAIN 1 CIP PERMEATE RETURN

4"-PCR-CPVC-02 | 51-I-007 IW RO TRAIN 2 CIP PERMEATE RETURN

4"-PCR-CPVC-02 | 51-I-008 JA RO TRAIN 3 CIP PERMEATE RETURN

HS 1047 | LOR | HS 1047 | OSC | ZT 1047 | ZSO 1047 | ZSC 1047 | ZI 1047 | 480V

VALVE ACTUATOR

HS 1048 | LOR | HS 1048 | OSC | ZLC 1048 | ZLO 1048 | ZSC 1048 | ZSO 1048 | 480V

VALVE ACTUATOR

RO-V-1045 | RO-V-1046

PIT 1007 | PG 1007 | FIT 1003 | FE 1003

RO-V-1043 | 2 1/2"-ROC-SS-12

IJ 51-I-003 CONCENTRATE FROM RO UNIT 1 VESSELS

RO-V-1044 | M | 2 1/2" | 2 1/2"-ROC-SS-12 NOTE 6 | RO-V-1047

M | 2 1/2"-ROC-SS-12 | RO-V-1048 | NOTE 6

AIT 1004 COND | AE 1004 COND | 24V | Y_D

RO-V-1050 SAMPLE LINE | RO-V-1049 TO TRAIN SAMPLE/ANALYZER PANEL

SS | PVC

2 1/2"-ROC-PVC-02

PIT 1008 | RO-V-1051 | RO-V-1052 | RO-V-1053 | 4"-ROC-PVC-02 | IT 65-I-001 TO OUTFALL SYSTEM

NACL-V-0006 | NACL-V-0005 | NACL-V-0001

2 1/2"-ROC-PVC-02 | IX 51-I-007 FROM TRAIN 2

2 1/2"-ROC-PVC-02 | JB 51-I-008 FROM TRAIN 3

2"-NACL-CPVC-02 | UB 90-I-001 FROM SODIUM HYPOCHLORITE | 1/2"-NACL-CPVC-02 | 1/2"-NACL-TEFL-01

PROVIDED BY RO SYSTEM SUPPLIER

NOTES:

1. SEE LEGEND AND ABBREVIATIONS ON DRAWINGS 00-I-001, 00-I-002 AND 00-I-003.
2. AREA CODE IS 51 UNLESS OTHERWISE NOTED. SYSTEM CODE IS RO UNLESS OTHERWISE NOTED.
3. LOCAL CONTROL DEVICES SUCH AS INDICATING LIGHTS AND SWITCHES, LOCATED ON MCCs OR AT DRIVEN EQUIPMENT, MAY NOT BE SHOWN ON THIS P&ID.
4. PIPING SIZES ARE PRELIMINARY AND TO BE FINALIZED BY ROSS.
5. CIP BLEED VALVE.
6. HIGH PRESSURE SECOND STAGE CONCENTRATE PIPING TO BE DUPLEX STAINLESS STEEL, REFER TO SPECIFICATIONS.
7. PROVIDE REMOVABLE SPOOLS, SWAPABLE FITTING, OR BLOCK AND BLEED VALVING TO PREVENT POTENTIAL CROSS-CONNECTION OF PERMATE AND CIP RETURN. FURNISH SUITABLE BLIND FLANGES TO REPLACE REMOVABLE SPOOL OR SWAPABLE FITTING AS REQUIRED.
8. AIR RELEASE / VACUUM RELIEF VALVES ARE PROVIDED AND INSTALLED BY THE MECHANICAL CONTRACTOR.

* PROVIDED BY RO SYSTEM SUPPLIER

NO.	BY	CHK	APP'D
0	BLB	JSM	BLB

REVISIONS AND RECORD OF USE

ISSUED FOR CONSTRUCTION 5/19/2020

REGISTERED PROFESSIONAL ENGINEER BRIAN L. BUTLER No. E 16569 ELECTRICAL STATE OF CALIFORNIA

BLACK & VEATCH JOINT VENTURE BLACK & VEATCH FILANC

CITY OF MORRO BAY
MORRO BAY WATER RECLAMATION FACILITY (WRF)

RO/UV BUILDING - RO SYSTEM P&ID

RO PERMEATE/CONCENTRATE, UNIT 1

DESIGNED: BLB, ADV
DETAILED: PVR
CHECKED: JSM, BDS
APPROVED: BLB
DATE: 5/19/2020

0 1/2 1

IF THIS BAR DOES NOT MEASURE 1" THEN DRAWING IS NOT TO FULL SCALE

PROJECT NO. 400530

51-I-006

SHEET 122 OF 412

PLOTTED: 5/18/2020 5:12:04 PM

D400530

PCS HMI

*51-RO-RIO-0201

PRESSURE PI 2007 | HI PRESSURE PAH 2006 | PRESSURE PI 2006 | IN REMOTE YI 2048 | OPENED ZIO 2048 | CLOSED ZIC 2048 | OPEN CMD ZCO 2048 | CLOSE CMD ZCC 2048 | FLOW FI 2003 | FLOW FI 2002 | IN REMOTE YI 2047 | POSITION FEEDBACK ZI 2047 | POSITION SETPT ZC 2047 | OPENED ZIO 2047 | CLOSED ZIC 2047 | COND AI 2003 | FAIL YA 2003 | FAIL YA 2004 | COND AI 2004 | IN REMOTE YI 2040 | OPENED ZIO 2040 | CLOSED ZIC 2040 | OPEN CMD ZCO 2040 | CLOSE CMD ZCC 2040 | IN REMOTE YI 2042 | OPENED ZIO 2042 | CLOSED ZIC 2042 | OPEN CMD ZCO 2042 | CLOSE CMD ZCC 2042 | PRESSURE PI 2008

NOTE 8 RO-V-2033 | NOTE 8 RO-V-2034

MOUNT ON RO TRAIN INSTRUMENT AND SAMPLE PANEL

PG 2006 | PSH 2006 | PIT 2006

4"-ROP-CPVC-02 | RO-V-2031 | RO-V-2032

IL 51-I-004
FROM RO PERMEATE UNIT 2 VESSELS

4"-ROP-CPVC-02

FIT 2002 24V | FE 2002 | M | 4"

AIT 2003 COND (24V) | AE 2003 COND | Y_D

RO-V-2036 SAMPLE LINE | RO-V-2035 | TO TRAIN SAMPLE/ANALYZER PANEL

CPVC-02 | PVC-02 | RO-V-2039

2"-ROP-PVC-02 | ROP-V-2054 NOTE 5 | Y_D

480V | HS 2040 LOR HS 2040 OSC | ZLC 2040 | ZLO 2040 | ZSC 2040 | ZSO 2040 | VALVE ACTUATOR

RO-V-2041 | 4"-ROP-PVC-02

480V | HS 2042 LOR HS 2042 OSC | ZLC 2042 | ZLO 2042 | ZSC 2042 | ZSO 2042 | VALVE ACTUATOR

M | RO-V-2042 | 4"-ROP-PVC-02

IU 52-I-001
TO UV SYSTEM

M | RO-V-2040 | 4"-ROP-PVC-02

IV 51-I-006
TO OUTFALL PS

REMOVABLE SPOOLS (NOTE 7)

480V | HS 2047 LOR HS 2047 OSC | ZT 2047 | ZSO 2047 | ZSC 2047 | ZI 2047 | VALVE ACTUATOR

RO-V-2037 | RO-V-2038 | 4"-PCR-CPVC-02

IW 51-I-006
RO CIP PERMEATE RETURN

480V | HS 2048 LOR HS 2048 OSC | ZLC 2048 | ZLO 2048 | ZSC 2048 | ZSO 2048 | VALVE ACTUATOR

RO-V-2045 | RO-V-2046

PIT 2007 | PG 2007 | FIT 2003 24V | FE 2003 | M | 2 1/2"

RO-V-2043 | 2 1/2"-ROC-SS-12 | RO-V-2044

IM 51-I-004
CONCENTRATE FROM RO UNIT 2 VESSELS

2 1/2"-ROC-SS-12 NOTE 6 | RO-V-2047

AIT 2004 COND (24V) | AE 2004 COND | Y_D

RO-V-2050 SAMPLE LINE | RO-V-2049 | TO TRAIN SAMPLE/ANALYZER PANEL

SS | PVC

2 1/2"-ROC-PVC-02

PIT 2008 | RO-V-2051 | RO-V-2052 | RO-V-2053 | 2 1/2"-ROC-PVC-02

IX 51-I-006
TO OUTFALL SYSTEM

M | RO-V-2048 | 2 1/2"-ROC-SS-12 NOTE 6

PROVIDED BY RO SYSTEM SUPPLIER

NOTES:

1. SEE LEGEND AND ABBREVIATIONS ON DRAWINGS 00-I-001, 00-I-002 AND 00-I-003.
2. AREA CODE IS 51 UNLESS OTHERWISE NOTED. SYSTEM CODE IS RO UNLESS OTHERWISE NOTED.
3. LOCAL CONTROL DEVICES SUCH AS INDICATING LIGHTS AND SWITCHES, LOCATED ON MCCs OR AT DRIVEN EQUIPMENT, MAY NOT BE SHOWN ON THIS P&ID.
4. PIPING SIZES ARE PRELIMINARY AND TO BE FINALIZED BY ROSS.
5. CIP BLEED VALVE.
6. HIGH PRESSURE SECOND STAGE CONCENTRATE PIPING TO BE DUPLEX STAINLESS STEEL, REFER TO SPECIFICATIONS.
7. PROVIDE REMOVABLE SPOOLS, SWAPABLE FITTING, OR BLOCK AND BLEED VALVING TO PREVENT POTENTIAL CROSS-CONNECTION OF PERMATE AND CIP RETURN. FURNISH SUITABLE BLIND FLANGES TO REPLACE REMOVABLE SPOOL OR SWAPABLE FITTING AS REQUIRED.
8. AIR RELEASE / VACUUM RELIEF VALVES ARE PROVIDED AND INSTALLED BY THE MECHANICAL CONTRACTOR.

* PROVIDED BY RO SYSTEM SUPPLIER

NO.	BY	CHK	APP'D
0	BLB	JSM	BLB

REVISIONS AND RECORD OF USE

ISSUED FOR CONSTRUCTION 5/19/2020

DATE

REGISTERED PROFESSIONAL ENGINEER BRIAN L. BUTLER No. E 16569 ELECTRICAL STATE OF CALIFORNIA

BLACK & VEATCH JOINT VENTURE BLACK & VEATCH FILANC

CITY OF MORRO BAY
MORRO BAY WATER RECLAMATION FACILITY (WRF)

RO/UV BUILDING - RO SYSTEM P&ID

RO PERMEATE/CONCENTRATE, UNIT 2

DESIGNED: BLB, ADV
DETAILED: PVR
CHECKED: JSM, BDS
APPROVED: BLB
DATE: 5/19/2020

0 1/2 1
IF THIS BAR DOES NOT MEASURE 1" THEN DRAWING IS NOT TO FULL SCALE

PROJECT NO. 400530

51-I-007
SHEET 123 OF 412

PLOTTED: 5/18/2020 5:12:05 PM
D400530

PCS HMI

*51-RO-RIO-0301

PRESSURE PI 3007 | HI PRESSURE PAH 3006 | PRESSURE PI 3006 | IN REMOTE YI 3048 | OPENED ZIO 3048 | CLOSED ZIC 3048 | OPEN CMD ZCO 3048 | CLOSE CMD ZCC 3048 | FLOW FI 3003 | FLOW FI 3002 | IN REMOTE YI 3047 | POSITION FEEDBACK ZI 3047 | POSITION SETPT ZC 3047 | OPENED ZIO 3047 | CLOSED ZIC 3047 | COND AI 3003 | FAIL YA 3003 | FAIL YA 3004 | COND AI 3004 | IN REMOTE YI 3040 | OPENED ZIO 3040 | CLOSED ZIC 3040 | OPEN CMD ZCO 3040 | CLOSE CMD ZCC 3040 | IN REMOTE YI 3042 | OPENED ZIO 3042 | CLOSED ZIC 3042 | OPEN CMD ZCO 3042 | CLOSE CMD ZCC 3042 | PRESSURE PI 3008

MOUNT ON RO TRAIN INSTRUMENT AND SAMPLE PANEL

NOTE 8 — RO-V-3033 — NOTE 8 — RO-V-3034

PG 3006 — PSH 3006 — PIT 3006

RO-V-3031

RO-V-3032

4"-ROP-CPVC-02

IO 51-I-005
FROM RO PERMEATE UNIT 3 VESSELS

4"-ROP-CPVC-02

FIT 3002 — 24V

FE 3002

M

4"

AIT 3003 — COND — 24V

AE 3003 — COND

Y_D

RO-V-3036 SAMPLE LINE

RO-V-3035

TO TRAIN SAMPLE/ANALYZER PANEL

RO-V-3054 — NOTE 5 — Y_D

2"-ROP-PVC-02

480V

HS 3040 — LOR — HS 3040 — OSC — ZLC 3040 — ZLO 3040 — ZSC 3040 — ZSO 3040

VALVE ACTUATOR

480V

HS 3042 — LOR — HS 3042 — OSC — ZLC 3042 — ZLO 3042 — ZSC 3042 — ZSO 3042

VALVE ACTUATOR

CPVC-02 PVC-02

RO-V-3039

RO-V-3041

4"-ROP-PVC-02

M — RO-V-3042

4"-ROP-PVC-02

IY 52-I-001
TO UV SYSTEM

REMOVABLE SPOOLS (NOTE 7)

M — RO-V-3040

4"-ROP-PVC-02

4"-ROP-PVC-02

IZ 51-I-006
TO OUTFALL PS

HS 3047 — LOR — HS 3047 — OSC — ZT 3047 — ZSO 3047 — ZSC 3047 — ZI 3047

480V

VALVE ACTUATOR

RO-V-3037

RO-V-3038

4"-PCR-CPVC-02

4"-PCR-CPVC-02

JA 51-I-006
RO CIP PERMEATE RETURN

HS 3048 — LOR — HS 3048 — OSC — ZLC 3048 — ZLO 3048 — ZSC 3048 — ZSO 3048

480V

VALVE ACTUATOR

RO-V-3045 — RO-V-3046

PIT 3007 — PG 3007 — FIT 3003 — 24V

FE 3003

RO-V-3043

2 1/2"-ROC-SS-12

IP 51-I-005
CONCENTRATE FROM RO UNIT 3 VESSELS

RO-V-3044

M — 2 1/2"

2 1/2"-ROC-SS-12 — NOTE 6

RO-V-3047

M

AIT 3004 — COND — 24V

AE 3004 — COND

Y_D

RO-V-3050 SAMPLE LINE

RO-V-3049

TO TRAIN SAMPLE/ANALYZER PANEL

SS PVC

PIT 3008

RO-V-3051

2 1/2"-ROC-PVC-02

RO-V-3052

RO-V-3053

2 1/2"-ROC-PVC-02

JB 51-I-006
TO OUTFALL SYSTEM

M

RO-V-3048

2 1/2"-ROC-SS-12 — NOTE 6

PROVIDED BY RO SYSTEM SUPPLIER

NOTES:

1. SEE LEGEND AND ABBREVIATIONS ON DRAWINGS 00-I-001, 00-I-002 AND 00-I-003.
2. AREA CODE IS 51 UNLESS OTHERWISE NOTED. SYSTEM CODE IS RO UNLESS OTHERWISE NOTED.
3. LOCAL CONTROL DEVICES SUCH AS INDICATING LIGHTS AND SWITCHES, LOCATED ON MCCs OR AT DRIVEN EQUIPMENT, MAY NOT BE SHOWN ON THIS P&ID.
4. PIPING SIZES ARE PRELIMINARY AND TO BE FINALIZED BY ROSS.
5. CIP BLEED VALVE.
6. HIGH PRESSURE SECOND STAGE CONCENTRATE PIPING TO BE DUPLEX STAINLESS STEEL, REFER TO SPECIFICATIONS.
7. PROVIDE REMOVABLE SPOOLS, SWAPABLE FITTING, OR BLOCK AND BLEED VALVING TO PREVENT POTENTIAL CROSS-CONNECTION OF PERMATE AND CIP RETURN. FURNISH SUITABLE BLIND FLANGES TO REPLACE REMOVABLE SPOOL OR SWAPABLE FITTING AS REQUIRED.
8. AIR RELEASE / VACUUM RELIEF VALVES ARE PROVIDED AND INSTALLED BY THE MECHANICAL CONTRACTOR.

* PROVIDED BY RO SYSTEM SUPPLIER

NO.	BY	CHK	APP'D	DATE	REVISIONS AND RECORD OF USE
0	BLB	JSM	BLB	5/19/2020	ISSUED FOR CONSTRUCTION

REGISTERED PROFESSIONAL ENGINEER — BRIAN L. BUTLER — No. E 16569 — ELECTRICAL — STATE OF CALIFORNIA

BLACK & VEATCH

JOINT VENTURE

FILANC® — BLACK & VEATCH

CITY OF MORRO BAY
MORRO BAY WATER RECLAMATION FACILITY (WRF)

RO/UV BUILDING - RO SYSTEM P&ID

RO PERMEATE/CONCENTRATE, UNIT 3

DESIGNED: BLB, ADV
DETAILED: PVR
CHECKED: JSM, BDS
APPROVED: BLB
DATE: 5/19/2020

0 1/2 1

IF THIS BAR DOES NOT MEASURE 1" THEN DRAWING IS NOT TO FULL SCALE

PROJECT NO. 400530

51-I-008

SHEET 124 OF 412

PLOTTED: 5/18/2020 5:12:06 PM
D400530

PCS HMI: LEVEL LI 0101 | TEMP TI 0001 | IN REMOTE YI 0001 | RUNNING YIR 0001 | FAIL YA 0001 | ENABLE YC 0001 | CIP TNK LWCO YC 0001 | FLOW FI 0101 | OPENED ZIO 0103 | CLOSED ZIC 0103 | IN REMOTE YI 0103 | OPEN CMD ZCO 0103 | CLOSE CMD ZCC 0103 | HI LEVEL LAH 0101 | LO LEVEL LAL 0101 | LEVEL LI 0201 | pH AI 0201 | FAIL YA 0201 | IN REMOTE YI 0001 | RUNNING YIR 0001 | FAIL YA 0001 | RUN CMD UCR 0001 | HI LEVEL LAH 0201 | LO LEVEL LAL 0201 | PCS HMI

PCS HMI: HI LEVEL LAH 0001 | EYEWASH FLOW FAH 0001 | PCS HMI

*51-RO-PLC-0001: LEVEL LI 0101 | TEMP TI 0001 | IN REMOTE YI 0001 | RUNNING YIR 0001 | FAIL YA 0001 | ENABLE YC 0001 | CIP TNK LWCO YC 0001 | FLOW FI 0101 | OPENED ZIO 0103 | CLOSED ZIC 0103 | IN REMOTE YI 0103 | OPEN CMD ZCO 0103 | CLOSE CMD ZCC 0103 | HI LEVEL LAH 0101 | LO LEVEL LAL 0101 | LEVEL LI 0201 | pH AI 0201 | FAIL YA 0201 | IN REMOTE YI 0001 | RUNNING YIR 0001 | FAIL YA 0001 | RUN CMD UCR 0001 | HI LEVEL LAH 0201 | LO LEVEL LAL 0201 | *51-RO-PLC-0001

51-CTRL-RIO-0001: HI LEVEL LAH 0001 | EYEWASH FLOW FAH 0001 | 51-CTRL-RIO-0001

HS 0103 LOR HS 0103 OSC ZLC 0103 ZLO 0103 ZSC 0103 ZSO 0103 — 480V — VALVE ACTUATOR

LOCAL STARTER 51-RO-LCP-0003

FROM POTABLE WATER SUPPLY — FSH 0001 — 120V — 1"-PW-CPVC-02 — 51-RO-EMEW-0001

IS 51-I-006 RO PERMEATE RETURN — 4"-PCR-CPVC-02

24V — FIT 0101 — CIP-V-0002 — CIP-V-0001 — CIP-V-0104

JD 51-I-010 RO CLEANING RETURN/RECIRC — 6"-CIPR-CPVC-02 — CIP-V-0201

JM 52-I-001 RO PERMEATE (MAKEUP) — 4"-ROP-PVC-02 — 3"-ROP-PVC-02 — FE 0101 — 3" — CIP-V-0102 — CIP-V-0101 — CIP-V-0103

UN 90-I-006 CITRIC ACID — 2"-CA-CPVC-02 — 1/2"-CA-PE-06 — 1"-CA-CPVC-02 — CIP-V-0102 — CA-V-0201 — 1"-CA-PVC-02

UI 90-I-003 SODIUM HYDROXIDE — 2"-NAOH-CPVC-02 — 3/4"-NAOH-PE-06 — 3/4"-NAOH-CS-02 — CIP-V-0102 — NAOH-V-0201 — 3/4"-NAOH-CS-02 — CA-V-0101 — NAOH-V-0101

6" VENT — TANK IMMERSION HEATER — OVERFLOW (NOTE 6) — 480V — CIP MAKEUP TANK CIP-T-0101 — LSH 0101 — LG 0101 — LIT 0101 — LSL 0101 — CIP-V-0105 — CIP-V-0106 — CIP-V-0107 — 6"-OF-PVC-02

6" VENT — (NOTE 6) — NEUTRALIZATION TANK CIP-T-0201 — LSH 0201 — LG 0201 — LSL 0201 — 3"-CIP-PVC-02 — CIP-V-0205

24V — AIT 0201 pH — AE 0201 pH — LIT 0201 — 6"-OF-PVC-02 — CIP-V-0202 — CIP-V-0203 — CIP-V-0204

6"-CIPS-CPVC-02 — 6"-CIPS-CPVC-02 — JC 51-I-010 TO CIP FEED PUMPS

LSH 0001 — Q

NEUTRALIZED CIP TO SITE SEWER

NOTES:

1. SEE LEGEND AND ABBREVIATIONS ON DRAWING 00-I-001, 00-I-002 AND 00-I-003.
2. AREA CODE IS 51 UNLESS OTHERWISE NOTED. SYSTEM CODE IS CIP UNLESS OTHERWISE NOTED.
3. LOCAL CONTROL DEVICES SUCH AS INDICATING LIGHTS AND SWITCHES, LOCATED IN MCC's OR AT DRIVEN EQUIPMENT MAY NOT INDICATED ON THIS P&ID.
4. ALL INTERCONNECTING PIPE TO BE SIZED BY ROSS AND PROVIDED AND INSTALLED BY CONTRACTOR.
5. VALVE PROVIDED TO THROTTLE FLOW TO CIP TANK TO ENSURE SUFFICIENT FLOW IS MAINTAINED TO DOWNSTREAM PROCESS.
6. PROVIDE 12" OF HEADSPACE ABOVE OVERFLOW FLUID LEVEL AND UNDERSIDE OF TANK ROOF TO PROVIDE VENTED AIR GAP.

* INDICATES ITEM FURNISHED BY ROSS (REVERSE OSMOSIS SYSTEM SUPPLIER).

NO.	BY	CHK	APP
0	BLB	JSM	BLB

REVISIONS AND RECORD OF USE

ISSUED FOR CONSTRUCTION — 5/19/2020

REGISTERED PROFESSIONAL ENGINEER — BRIAN L. BUTTERS — No. E 16569 — ELECTRICAL — STATE OF CALIFORNIA

BLACK & VEATCH

JOINT VENTURE

FILANC — BLACK & VEATCH

CITY OF MORRO BAY
MORRO BAY WATER RECLAMATION FACILITY (WRF)

RO/UV BUILDING - RO SYSTEM P&ID
RO CIP TANKS

DESIGNED: BLB, ADV
DETAILED: PVR
CHECKED: JSM, BDS
APPROVED: BLB
DATE: 5/19/2020

0 1/2 1
IF THIS BAR DOES NOT MEASURE 1" THEN DRAWING IS NOT TO FULL SCALE

PROJECT NO. 400530

51-I-009
SHEET 125 OF 412

PLOTTED: 5/18/2020 5:12:07 PM
D400530

PCS HMI | *51-RO-PLC-0001

RUNNING YIR 0101 | FAIL YA 0101 | IN REMOTE YI 0101 | RUN CMD UCR 0101 | SPEED FEEDBACK SI 0101 | SPEED SETPT SC 0101

RUNNING YIR 0201 | FAIL YA 0201 | IN REMOTE YI 0201 | RUN CMD UCR 0201 | SPEED FEEDBACK SI 0201 | SPEED SETPT SC 0201 | TEMP TI 0001

pH AI 0001 | FAIL YA 0001 | HI PRESSURE PAH 0001 | DIFF. PRESSURE PDAH 0001 | FLOW FI 0001

PCS HMI | *51-RO-PLC-0001

PCS HMI | 51-CTRL-RIO-0001

FIRE ALARM UA 0002 | TROUBLE ALARM UA 0003

FAIL UA 0001

PCS HMI | 51-CTRL-RIO-0001

RO BLDG. FIRE ALARM CONTROL PANEL
50-ELEC-FP-0001

TEMPERATURE CONTROL PANEL
51-RO-TCP-0001

* 51-RO-VFD-0101
* 51-RO-LCP-0003
* 51-RO-VFD-0201

IH | 51-I-003
RO CLEANING RETURN / FEED

6"-CIPR-CPVC-02

6"-CIPR-CPVC-02

RO-V-0292

6"-CIPR-CPVC-02

JD | 51-I-009
RO CLEANING TO / FROM RO CIP TANKS

* PDSH 0001
* PDG 0001

* AIT 0001 pH (24V)
* AE 0001 pH
* TIT 0001
* TE 0001
* PSH 0001

CIP-V-0007 | CIP-V-0009 | CIP-V-0006 | CIP-V-0008 | CIP-V-0012

CIP-V-0002 | CIP-V-0004 | CIP-V-0005

CIP CARTRIDGE FILTER
CIP-FLC-0001

CIP-V-0003
SAMPLE

CIP-V-0014 | CIP-V-0013
SAMPLE

FIT 0001 (24V)
FE 0001
M
6"

CIP-V-0015
CIP-FE-0001
CIP-V-0018
CIP-V-0017
CIP-V-0016

6"-CIPS-CPVC-02
JE | 51-I-003
TO RO UNIT 1

6"-CIPS-CPVC-02
JF | 51-I-004
TO RO UNIT 2

6"-CIPS-CPVC-02
JG | 51-I-005
TO RO UNIT 3

* PG 0101
CIP-V-0109 | CIP-V-0111 | CIP-V-0110
CIP PUMP 1
CIP-P-0011

CIP-V-0108

JC | 51-I-009
FROM CIP TANK PERMEATE CLEANING RETURN

6"-CIPS-CPVC-02

* PG 0201
CIP-V-0206
CIP-V-0207
CIP-V-0208 | CIP-V-0209
CIP PUMP 2
CIP-P-0012

CIP-V-0010 | CIP-V-0011

DRAINS TO CONTAINMENT AREA

* - EQUIPMENT WITHIN BOX

NOTES:

1. SEE LEGEND AND ABBREVIATIONS ON DRAWING 00-I-001, 00-I-002 AND 00-I-003.
2. AREA CODE IS 51 UNLESS OTHERWISE NOTED. SYSTEM CODE IS CIP UNLESS OTHERWISE NOTED.
3. LOCAL CONTROL DEVICES SUCH AS INDICATING LIGHTS AND SWITCHES, LOCATED ON MCC's OR AT DRIVEN EQUIPMENT, MAY NOT BE SHOWN ON THIS P&ID.
4. ALL INTERCONNECTING PIPE TO BE SIZED BY ROSS AND PROVIDED AND INSTALLED BY CONTRACTOR.

* INDICATES ITEM FURNISHED BY ROSS (REVERSE OSMOSIS SYSTEM SUPPLIER).

NO.	BY	CHK	APP'D
0	BLB	JSM	BLB

REVISIONS AND RECORD OF USE

ISSUED FOR CONSTRUCTION 5/19/2020

REGISTERED PROFESSIONAL ENGINEER
BRIAN L. BUTLER
No. E 16569
ELECTRICAL
STATE OF CALIFORNIA

BLACK & VEATCH JOINT VENTURE
BLACK & VEATCH
FILANC

CITY OF MORRO BAY
MORRO BAY WATER RECLAMATION FACILITY (WRF)

RO/UV BUILDING - RO SYSTEM
P&ID
RO CIP PUMPS

DESIGNED: BLB, ADV
DETAILED: PVR
CHECKED: JSM, BDS
APPROVED: BLB
DATE: 5/19/2020

0 1/2 1
IF THIS BAR DOES NOT MEASURE 1" THEN DRAWING IS NOT TO FULL SCALE

PROJECT NO. 400530

51-I-010
SHEET 126 OF 412

PLOTTED: 5/18/2020 3:12:08 PM
D400530

PCS HMI

OPENED ZIO 0013 | CLOSED ZIC 0013 | IN REMOTE YI 0013 | OPEN CMD ZCO 0013 | CLOSE CMD ZCC 0013 | LEVEL LI 0001 | LO LEVEL LAL 0001 | HI LEVEL LAH 0001

IN REMOTE YI 0102 | RUNNING YIR 0102 | FAIL UA 0102 | RUN CMD UCR 0102 | SPEED SETPT SC 0102 | SPEED FEEDBACK SI 0102

IN REMOTE YI 0202 | RUNNING YIR 0202 | FAIL UA 0202 | RUN CMD UCR 0202 | SPEED SETPT SC 0202 | SPEED FEEDBACK SI 0202

FLOW FI 0002

*51-RO-PLC-0001

HS 0013 LOR | HS 0013 OSC | ZLC 0013 | ZLO 0013 | ZSC 0013 | ZSO 0013

VALVE ACTUATOR

480V

NOTE 5

* 51-RO-VFD-0102 (I)

* 51-RO-VFD-0202 (I)

* 51-RO-LCP-0002

4"-ROP-PVC-02

JK 52-I-001 FROM RO PERMEATE

M

* 2 1/2"-ROP-PVC-02

RO-V-0013

OVERFLOW (NOTE 6)

RO-V-0015

LSH 0001

RO-V-0019

2500 GAL RO FLUSH TANK
* RO-T-0001

LG 0001

LIT 0001

RO-V-0014

RO-V-0020

LSL 0001

RO-V-0016

RO-V-0017

RO-V-0018

2"-DRN-PVC-02

4"-DRN-PVC-02

4"-DRN-CPVC-02

DRAIN TO TRENCH

* - EQUIPMENT WITHIN BOX

PG 0103

RO-V-0118

4"-FF-PVC-02

RO-V-0119

RO-V-0120

4"-ROP-PVC-02

RO-V-0116

RO FLUSH PUMP NO.1
RO-P-0102

RO-V-0117

1"-RO-PVC

FIT 0002 — 24V

FE 0002

M 4"

4"-FF-PVC-02 — JH 51-I-002 TO RO UNIT NO.1

4"-FF-PVC-02 — JI 51-I-002 TO RO UNIT NO.2

4"-FF-PVC-02 — JJ 51-I-002 TO RO UNIT NO.3

4"-ROP-PVC-02

PG 0203

RO-V-0218

4"-FF-PVC-02

RO-V-0219

RO-V-0220

4"-ROP-PVC-02

RO-V-0216

RO FLUSH PUMP NO.2
RO-P-0202

RO-V-0217

1"-RO-PVC

NOTES:

1. SEE LEGEND AND ABBREVIATIONS ON DRAWINGS 00-I-001, 00-I-00 AND 00-I-003.
2. AREA CODE IS 51 UNLESS OTHERWISE NOTED. SYSTEM CODE IS RO UNLESS OTHERWISE NOTED.
3. LOCAL CONTROL DEVICES SUCH AS INDICATING LIGHTS AND SWITCHES, LOCATED ON MCCs OR AT DRIVEN EQUIPMENT, MAY NOT BE SHOWN ON THIS P&ID.
4. INSTRUMENTATION AND CONTROLS ARE TYPICALLY FOR VARIABLE SPEED DRIVES FOR RO FLUSH FEED PUMPS. NOT ALL PANEL COMPONENTS SHOWN. SEE SPECIFICATIONS FOR INSTALLATIONS FOR REQUIREMENTS.
5. PIPE DIAMETERS INDICATED ARE FOR REFERENCE ONLY. PIPE DIAMETERS TO BE DETERMINED / CONFIRMED BY ROSS.
6. PROVIDE 12" OF HEADSPACE ABOVE OVERFLOW FLUID LEVEL AND UNDERSIDE OF TANK ROOF TO PROVIDE VENTED AIR GAP.

* PROVIDED BY RO SYSTEM SUPPLIER

NO.	BY	CHK	APP
0	BLB	JSM	BLB

REVISIONS AND RECORD OF USE

5/19/2020 ISSUED FOR CONSTRUCTION

DATE

REGISTERED PROFESSIONAL ENGINEER — ERICK V. BEVINGTON — No. C 78836 — CIVIL — STATE OF CALIFORNIA

BLACK & VEATCH JOINT VENTURE

BLACK & VEATCH

FILANC

CITY OF MORRO BAY
MORRO BAY WATER
RECLAMATION FACILITY (WRF)

RO/UV BUILDING - RO SYSTEM
P&ID
RO FLUSH SYSTEM

DESIGNED: BLB, ADV
DETAILED: PVR
CHECKED: JSM, BDS
APPROVED: BLB
DATE: 5/19/2020

0 1/2 1
IF THIS BAR DOES NOT MEASURE 1" THEN DRAWING IS NOT TO FULL SCALE

PROJECT NO.
400530

51-I-011
SHEET
127 OF 412

PLOTTED: 5/18/2020 5:12:08 PM
D400530

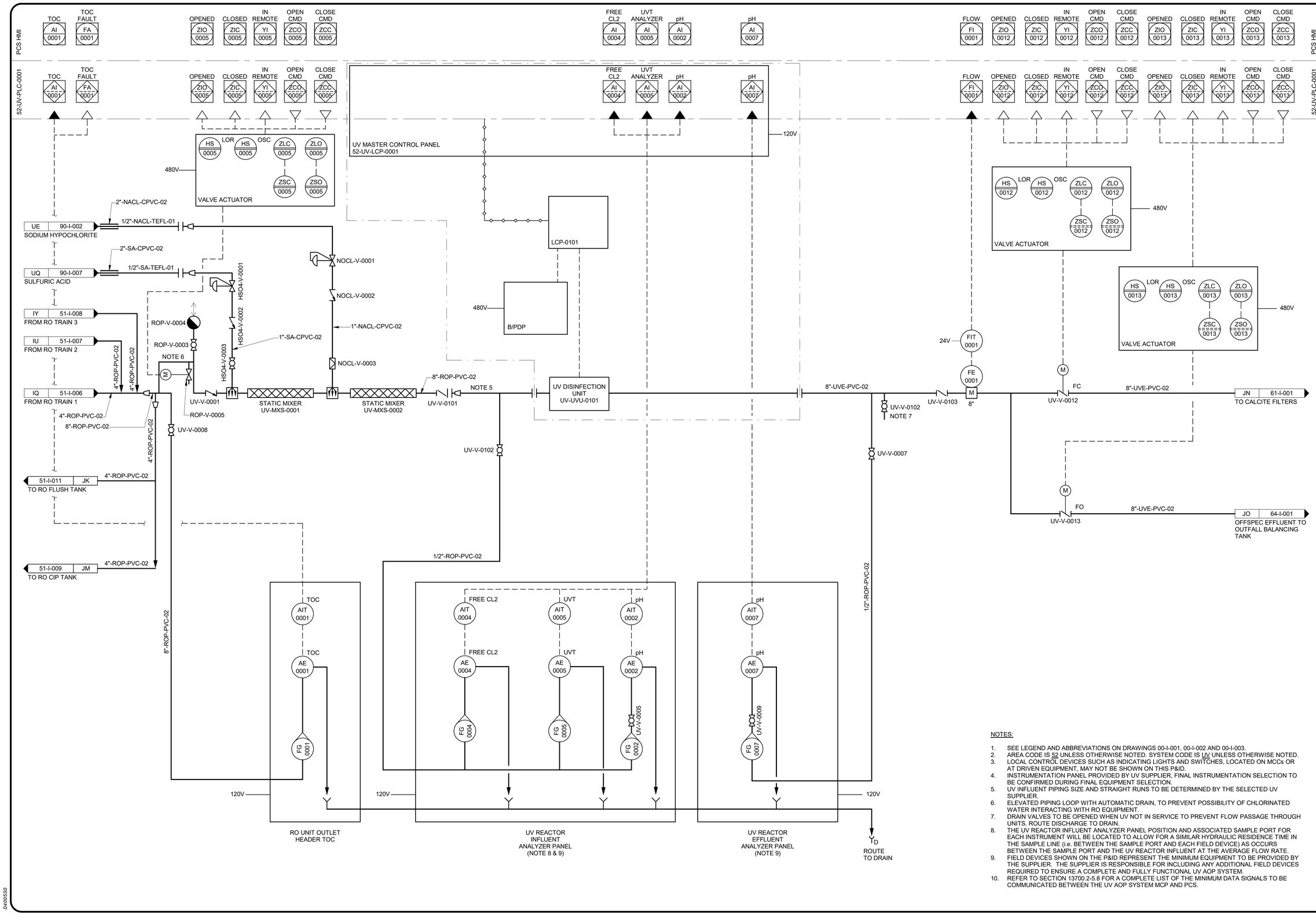

NOTES:

1. SEE LEGEND AND ABBREVIATIONS ON DRAWINGS 00-I-001, 00-I-002 AND 00-I-003.
2. AREA CODE IS 52 UNLESS OTHERWISE NOTED. SYSTEM CODE IS UV UNLESS OTHERWISE NOTED.
3. LOCAL CONTROL DEVICES SUCH AS INDICATING LIGHTS AND SWITCHES, LOCATED ON MCCs OR AT DRIVEN EQUIPMENT, MAY NOT BE SHOWN ON THIS P&ID.
4. INSTRUMENTATION PANEL PROVIDED BY UV SUPPLIER, FINAL INSTRUMENTATION SELECTION TO BE CONFIRMED DURING FINAL EQUIPMENT SELECTION.
5. UV INFLUENT PIPING SIZE AND STRAIGHT RUNS TO BE DETERMINED BY THE SELECTED UV SUPPLIER.
6. ELEVATED PIPING LOOP WITH AUTOMATIC DRAIN, TO PREVENT POSSIBILITY OF CHLORINATED WATER INTERACTING WITH RO EQUIPMENT.
7. DRAIN VALVES TO BE OPENED WHEN UV NOT IN SERVICE TO PREVENT FLOW PASSAGE THROUGH UNITS. ROUTE DISCHARGE TO DRAIN.
8. THE UV REACTOR INFLUENT ANALYZER PANEL POSITION AND ASSOCIATED SAMPLE PORT FOR EACH INSTRUMENT WILL BE LOCATED TO ALLOW FOR A SIMILAR HYDRAULIC RESIDENCE TIME IN THE SAMPLE LINE (i.e. BETWEEN THE SAMPLE PORT AND EACH FIELD DEVICE) AS OCCURS BETWEEN THE SAMPLE PORT AND THE UV REACTOR INFLUENT AT THE AVERAGE FLOW RATE.
9. FIELD DEVICES SHOWN ON THE P&ID REPRESENT THE MINIMUM EQUIPMENT TO BE PROVIDED BY THE SUPPLIER. THE SUPPLIER IS RESPONSIBLE FOR INCLUDING ANY ADDITIONAL FIELD DEVICES REQUIRED TO ENSURE A COMPLETE AND FULLY FUNCTIONAL UV AOP SYSTEM.
10. REFER TO SECTION 13700.2-5.8 FOR A COMPLETE LIST OF THE MINIMUM DATA SIGNALS TO BE COMMUNICATED BETWEEN THE UV AOP SYSTEM MCP AND PCS.

NO.	BY	CHK	APP
0	BLB	JSM	BLB

REVISIONS AND RECORD OF USE

ISSUED FOR CONSTRUCTION 5/19/2020

DATE

REGISTERED PROFESSIONAL ENGINEER
BRIAN L. BUTLER
No. E 16569
ELECTRICAL
STATE OF CALIFORNIA

BLACK & VEATCH
JOINT VENTURE
FILANC
BLACK & VEATCH

CITY OF MORRO BAY
MORRO BAY WATER RECLAMATION FACILITY (WRF)

RO/UV BUILDING - UV SYSTEM
P&ID
UV/AOP SYSTEM

DESIGNED: KEZ, EVB
DETAILED: MAK
CHECKED: JSM, BDS
APPROVED: BLB
DATE: 5/19/2020

0 1/2 1
IF THIS BAR DOES NOT MEASURE 1" THEN DRAWING IS NOT TO FULL SCALE

PROJECT NO. 400530

52-I-001
SHEET 128 OF 412

PLOTTED: 5/19/2020 3:24:30 PM
D400530

PCS HMI

IN REMOTE YI 0001 | OPENED ZIO 0001 | CLOSED ZIC 0001 | OPEN CMD ZCO 0001 | CLOSE CMD ZCC 0001 | FLOW FI 0001 | LEVEL LI 0101 | pH AI 0101 | pH AI 0201 | DIFF. PRESSURE PDAH 0101 | DIFF. PRESSURE PDAH 0201 | IN REMOTE YI 0001 | RUNNING YIR 0001 | FAIL YA 0001 | RUN CMD UCR 0001 | SPEED SETPT SC 0001 | SPEED FEEDBACK SI 0001 | HI TEMP TAH 0001 | OVERLOAD YA 0001

51-CTRL-RIO-0001

IN REMOTE YI 0001 | OPENED ZIO 0001 | CLOSED ZIC 0001 | OPEN CMD ZCO 0001 | CLOSE CMD ZCC 0001 | FLOW FI 0001 | LEVEL LI 0101 | pH AI 0101 | pH AI 0201 | DIFF. PRESSURE PDAH 0101 | DIFF. PRESSURE PDAH 0201 | IN REMOTE YI 0001 | RUNNING YIR 0001 | FAIL YA 0001 | RUN CMD UCR 0001 | SPEED SETPT SC 0001 | SPEED FEEDBACK SI 0001 | HI TEMP TAH 0001 | OVERLOAD YA 0001

HS 0001 LOR HS 0001 OSC | ZLC 0001 | ZLO 0001 | ZSC 0001 | ZSO 0001 — 480V

VALVE ACTUATOR

YA 0001 FAIL | YL 0001 RUN | SI 0001

HS 0001 SS | HS 0001 LOR — 480V

61-CAL-LCP-0001
61-CAL-VFD-0001

24V — AIT 0201 pH — AE 0201 pH

BY FBV | BY CALCITE SYSTEM SUPPLIER

10"-UVE-PVC-02

CAL-V-0204

BY CALCITE SYSTEM SUPPLIER | BY FBV

8"-UVE-PVC-02 — KA | 62-I-001 — TO PRODUCT WATER TANK

CAL-V-0105

CAL-V-0109 2" ACCESS HATCH

PG 0002

CAL-V-0110

CAL-V-0104

CAL-V-0103

CALCITE FILTER CAL-FLT-0101

PDG 0101

PDS 0101

CAL-V-0205

PG 0004

CAL-V-0209 2" ACCESS HATCH

CAL-V-0210

CAL-V-0203

CALCITE FILTER CAL-FLT-0201

PDG 0201

PDS 0201

VENT

10"

12"-OF-PVC-02

BACKWASH HOLDING TANK CAL-T-0001

ACCESS HATCH

24V — FIT 0001 — FE 0001 — M — 3"-D-PVC-02 — TO SEWER — CAL-V-0001

LIT 0001 — 3" — CAL-V-0010

AIT 0101 pH — 24V

AE 0101 pH

PG 0001 — CAL-V-0108

CAL-V-0107 — D

CAL-V-0101

CAL-V-0106

PG 0003 — CAL-V-0208

CAL-V-0207 — D

CAL-V-0202

CAL-V-0201

CAL-V-0206

BY CALCITE SYSTEM SUPPLIER | BY FBV

JN | 52-I-001 — FROM UV SYSTEM EFFLUENT — 8"-UVE-PVC-02

BY CALCITE SYSTEM SUPPLIER | BY FBV

10"-IPR-PVC-02

NOTE 3

BY GENERAL CONTRACTOR | BY CALCITE SYSTEM SUPPLIER

PG 0005

CAL-V-0006

CAL-V-0008

CAL-V-0007

BACKWASH FLUSH PUMP CAL-P-0001

CAL-V-0005

BY CALCITE SYSTEM SUPPLIER | BY FBV

10"-IPR-PVC-02 — 62-I-001 | LA — FROM PRODUCT WATER TANK

NOTES:

1. SEE LEGEND AND ABBREVIATIONS ON DRAWINGS 00-I-001, 00-I-002 AND 00-I-003.
2. AREA CODE IS 61 UNLESS OTHERWISE NOTED. SYSTEM CODE IS CAL UNLESS OTHERWISE NOTED.
3. IF POSSIBLE, INCLUDE THE BACKWASH PUMP ASSEMBLY, PIPING AND APPURTENANCES ON THE SAME SKID AS THE CALCITE CONTACTOR.

* ITEM FURNISHED BY CALCITE SYSTEM SUPPLIER.

NO.	BY	CHK	APP
0	BLB	JSM	BLB

REVISIONS AND RECORD OF USE

DATE: 5/19/2020 — ISSUED FOR CONSTRUCTION

REGISTERED PROFESSIONAL ENGINEER — BRIAN L. BUTLER — No. E 16569 — ELECTRICAL — STATE OF CALIFORNIA

BLACK & VEATCH

JOINT VENTURE

BLACK & VEATCH | FILANC

CITY OF MORRO BAY
MORRO BAY WATER RECLAMATION FACILITY (WRF)

PRODUCT WATER AREA - CALCITE CONTACTOR P&ID
CALCITE REMINERALIZATION SYSTEM

DESIGNED: BLB, KEZ
DETAILED: PVR
CHECKED: JSM,BDS
APPROVED: BLB
DATE: 5/19/2020

0 1/2 1

IF THIS BAR DOES NOT MEASURE 1" THEN DRAWING IS NOT TO FULL SCALE

PROJECT NO. 400530

61-I-001

SHEET 129 OF 412

PLOTTED: 5/18/2020 5:20:26 PM
D400530

PCS HMI

51-CTRL-RIO-0001

LEVEL LI 0001

LO-LO LEVEL LALL 0001

HI-HI LEVEL LAHH 0001

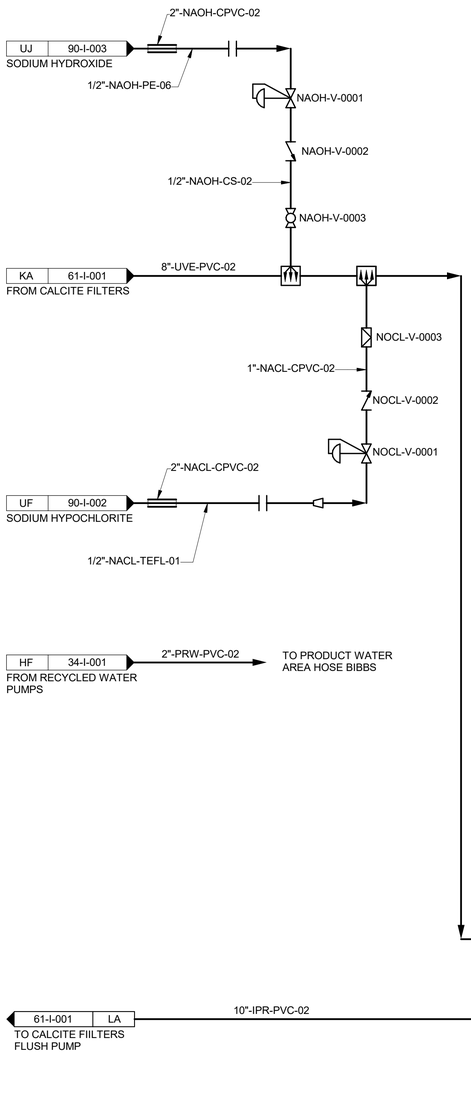

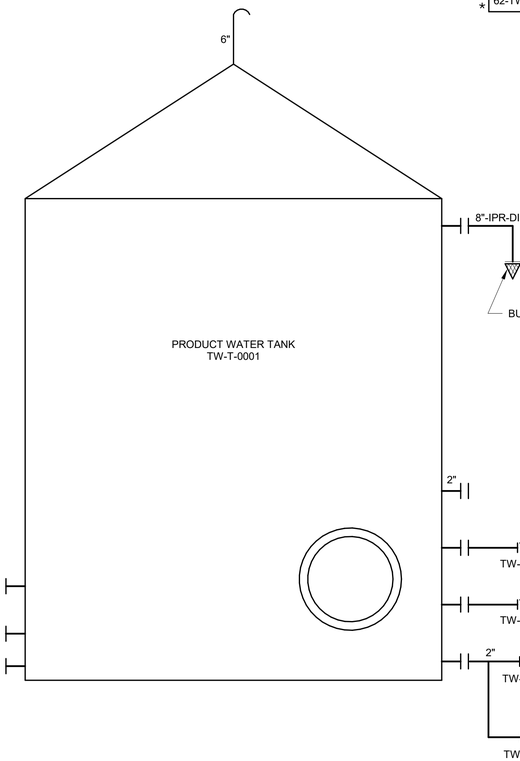



NOTES:

1. SEE LEGEND AND ABBREVIATIONS ON DRAWINGS 00-I-001, 00-I-002 AND 00-I-003.
2. AREA CODE IS 62 UNLESS OTHERWISE NOTED. SYSTEM CODE IS TW UNLESS OTHERWISE NOTED.
3. LOCAL CONTROL DEVICES SUCH AS INDICATING LIGHTS AND SWITCHES, LOCATED ON MCCs OR AT DRIVEN EQUIPMENT, MAY NOT BE SHOWN ON THIS P&ID.

NO.	BY	CHK	APP
0	BLB	JSM	BLB

DATE	REVISIONS AND RECORD OF USE
5/19/2020	ISSUED FOR CONSTRUCTION

REGISTERED PROFESSIONAL ENGINEER
BRIAN L. BUTLER
No. E 16569
ELECTRICAL
STATE OF CALIFORNIA

BLACK & VEATCH JOINT VENTURE
BLACK & VEATCH
FILANC

CITY OF MORRO BAY
MORRO BAY WATER RECLAMATION FACILITY (WRF)

PRODUCT WATER AREA - IPR PRODUCT WATER STORAGE TANK P&ID
IPR PRODUCT WATER STORAGE TANK

DESIGNED:	BLB, KEZ
DETAILED:	PVR
CHECKED:	JSM, BDS
APPROVED:	BLB
DATE:	5/19/2020

0 1/2 1
IF THIS BAR DOES NOT MEASURE 1" THEN DRAWING IS NOT TO FULL SCALE

PROJECT NO. 400530

62-I-001
SHEET 130 OF 412

PLOTTED: 5/18/2020 5:20:27 PM
D400530

TYPICAL I/O & CONTROLS FOR IPR WATER PUMP NO. 2 & 3

PCS HMI

51-CTRL-RIO-0001

IN REMOTE YI 0101 | RUNNING YIR 0101 | FAIL YA 0101 | RUN CMD UCR 0101 | SPEED SETPT SC 0101 | SPEED FEEDBACK SI 0101

PRESSURE PI 0001 | FLOW FI 0001

CL2 AI 0001 / FAIL YA 0001 | COND AI 0002 / FAIL YA 0002 | pH AI 0003 / FAIL YA 0003

FROM 62-I-001

63-ELEC-MCC-0001
/ 63-IPR-VFD-0101

PSH 0101 | PG 0101

TW-V-0103

6"-IPR-DIP

TW-V-0101 | TW-V-0104 | TW-V-0105 | TW-V-0102

IPR PUMP NO. 1
TW-P-0101

SEE TYPICAL I/O & CONTROLS

PSH 0201 | PG 0201

TW-V-0203

TW-V-0201 | TW-V-0204 | TW-V-0205 | TW-V-0202

IPR PUMP NO. 2
TW-P-0201

SEE TYPICAL I/O & CONTROLS

PSH 0301 | PG 0301

TW-V-0303

TW-V-0301 | TW-V-0304 | TW-V-0305 | TW-V-0302

IPR PUMP NO. 3
TW-P-0301

10"-IPR-DIP

8"-IPR-DIP

LB 62-I-001
FROM PRODUCT WATER TANK

PIT 0001 | TW-V-0001 | TW-V-0107 24V | TW-V-0106 | 2"-IPR-DIP | FIT 0001 | FE 0001 M | 6" | 6"-IPR-DIP

TW-V-0002 | 12"-IPR-DIP | A/G | B/G | 12"-IPR-HDPE

RO PERMEATE TO GROUNDWATER DISCHARGE

1"-IPR-PVC-02

120V

AIT 0001 CL2 | AIT 0002 COND | AIT 0003 pH

AE 0001 CL2 | AE 0002 COND | AE 0003 pH

IPR PRODUCT WATER WATER ANALYZER PANEL
(LOCATED IN RO/UV BUILDING)

NOTES:

1. SEE LEGEND AND ABBREVIATIONS ON DRAWING 00-I-001, 00-I-002 AND 00-I-003.
2. AREA CODE IS 63 UNLESS OTHERWISE NOTED. SYSTEM CODE IS TW UNLESS OTHERWISE NOTED.
3. LOCAL CONTROL DEVICES SUCH AS INDICATING LIGHTS AND SWITCHES, LOCATED IN MCC's OR AT DRIVEN EQUIPMENT MAY NOT INDICATED ON THIS P&ID.

NO.	BY	CHK	APP
0	BLB	JSM	BLB

REVISIONS AND RECORD OF USE

ISSUED FOR CONSTRUCTION 5/19/2020 DATE

REGISTERED PROFESSIONAL ENGINEER
BRIAN L. BUTLER
No. E 16569
ELECTRICAL
STATE OF CALIFORNIA

BLACK & VEATCH

JOINT VENTURE

FILANC

BLACK & VEATCH

CITY OF MORRO BAY
MORRO BAY WATER
RECLAMATION FACILITY (WRF)

PRODUCT WATER AREA - IPR PRODUCT WATER
PUMP STATION P&ID
IPR PUMP STATION

DESIGNED: BLB, KEZ
DETAILED: PVR
CHECKED: JSM, BDS
APPROVED: BLB
DATE: 5/19/2020

0 1/2 1
IF THIS BAR DOES NOT MEASURE 1" THEN DRAWING IS NOT TO FULL SCALE

PROJECT NO.
400530

63-I-001
SHEET
131 OF 412

PLOTTED: 5/18/2020 5:20:27 PM
D400530

PCS HMI

51-CTRL-RIO-0001

LEVEL LI 0001

HI LEVEL LAH 0001

LOW LEVEL LSL 0001

TYPICAL I/O & CONTROLS FOR OUTFALL PUMP NO. 2, 3, & 4

RUN CMD UCR 0101 | IN REMOTE YI 0101 | RUNNING YIR 0101 | FAULT YA 0101 | SPEED FEEDBACK SI 0101 | SPEED SETPT SC 0101

FLOW FI 0001

PRESSURE PI 0001

LOCATED IN RO BUILDING ELECTRICAL ROOM

120Vac

64-TW-LCP-0001

(TYPICAL FOR 64-TW-VFD-0201, 64-TW-VFD-0301 & 64-TW-VFD-0401)

64-TW-VFD-0101/ 50-ELEC-MCC-0001

SEE TYPICAL I/O AND CONTROLS

PG 0401 | PSH 0401 | TSH 0401 | 10"-POW-DIP | TW-V-0402 | TW-V-0401 | TW-V-0403 | TW-V-0404

OUTFALL PUMP NO.4 TW-P-0401

SEE TYPICAL I/O AND CONTROLS

PG 0301 | PSH 0301 | TSH 0301 | 10"-POW-DIP | TW-V-0302 | TW-V-0301 | TW-V-0303 | TW-V-0304

OUTFALL PUMP NO.3 TW-P-0301

SEE TYPICAL I/O AND CONTROLS

PG 0201 | PSH 0201 | TSH 0201 | 14"-POW-DIP | TW-V-0202 | TW-V-0201 | TW-V-0203 | TW-V-0204

OUTFALL PUMP NO.2 TW-P-0201

PG 0101 | PSH 0101 | TSH 0101 | 14"-POW-DIP | TW-V-0102 | TW-V-0101 | TW-V-0103 | TW-V-0104

OUTFALL PUMP NO.1 TW-P-0101

20"-POW-DIP

18"-POW-DIP

IR | 51-I-006 — 8"-ROP-PVC-02 — FROM RO PERMEATE

IA | 51-I-001 — 8"-ROF-PVC-02 — FROM RO BYPASS

JO | 52-I-001 — 8"-UVE-PVC-02 — OFF SPEC UV EFFLUENT

GC | 33-I-001 — 12"-MFF-HDPE — 12"-MFF-DIP — FROM RO FEED TANKS OVERFLOW

RA | 73-I-001 — 20"-FOW-HDPE — B/G — A/G — 20"-FOW-DIP — TW-V-0002 — FROM AQUAPRIME FILTERS

OUTFALL BALANCING TANK TW-T-0001

20"-OF-DIP

20"-POW-DIP — TW-V-0004

2" — TW-V-0022 — LSH 0001

TW-V-0023 — LSL 0001

TW-V-0005

3"-DRN-DIP

LIT 0001 — 3" — TW-V-0021

TW-V-0024 — 24V — FIT 0001

TW-V-0025 — FE 0001 M — 12"

PIT 0001

TW-V-0026

TW-V-0027

2"-POW-SP — TW-V-0028

36" MANWAY

A/G — B/G — 36"

78"-POW-SP — NOTE 4

NA | 65-I-001 — TO DISINFECTION SYSTEM

UA | 90-I-001 — SODIUM HYPOCHLORITE — 2"-NACL-CPVC-02 — 1/2"-NACL-TEFL-01 — 1"-NACL-CPVC-02

NOCL-V-0001 NOCL-V-0002

NOTES:

1. SEE LEGEND AND ABBREVIATIONS ON DRAWING 00-I-001, 00-I-002 AND 00-I-003.
2. AREA CODE IS 64 UNLESS OTHERWISE NOTED. SYSTEM CODE IS TW UNLESS OTHERWISE NOTED.
3. LOCAL CONTROL DEVICES SUCH AS INDICATING LIGHTS AND SWITCHES, LOCATED ON MCC's OR AT DRIVEN EQUIPMENT, MAY NOT BE SHOWN ON THIS P&ID.
4. OCEAN OUTFALL PIPING INCREASE TO PROVIDE VOLUME REQUIRED FOR FULL DISINFECTION PRIOR TO DECHLORINATION.

NO.	BY	CHK	APP
0	BLB	JSM	BLB

REVISIONS AND RECORD OF USE

ISSUED FOR CONSTRUCTION — 5/19/2020

DATE

REGISTERED PROFESSIONAL ENGINEER — BRIAN L. BUTLER — No. E 16569 — ELECTRICAL — STATE OF CALIFORNIA

BLACK & VEATCH JOINT VENTURE — BLACK & VEATCH — FILANC

CITY OF MORRO BAY
MORRO BAY WATER RECLAMATION FACILITY (WRF)

PRODUCT WATER AREA - OUTFALL PUMP STATION
P&ID
OUTFALL TANK & PUMPS

DESIGNED: BLB, KEZ
DETAILED: PVR
CHECKED: JSM, BDS
APPROVED: BLB
DATE: 5/19/2020

0 1/2 1

IF THIS BAR DOES NOT MEASURE 1" THEN DRAWING IS NOT TO FULL SCALE

PROJECT NO. 400530

64-I-001

SHEET 132 OF 412

PLOTTED: 5/19/2020 3:12:45 PM

D400530

PCS HMI

51-CTRL-RIO-0001

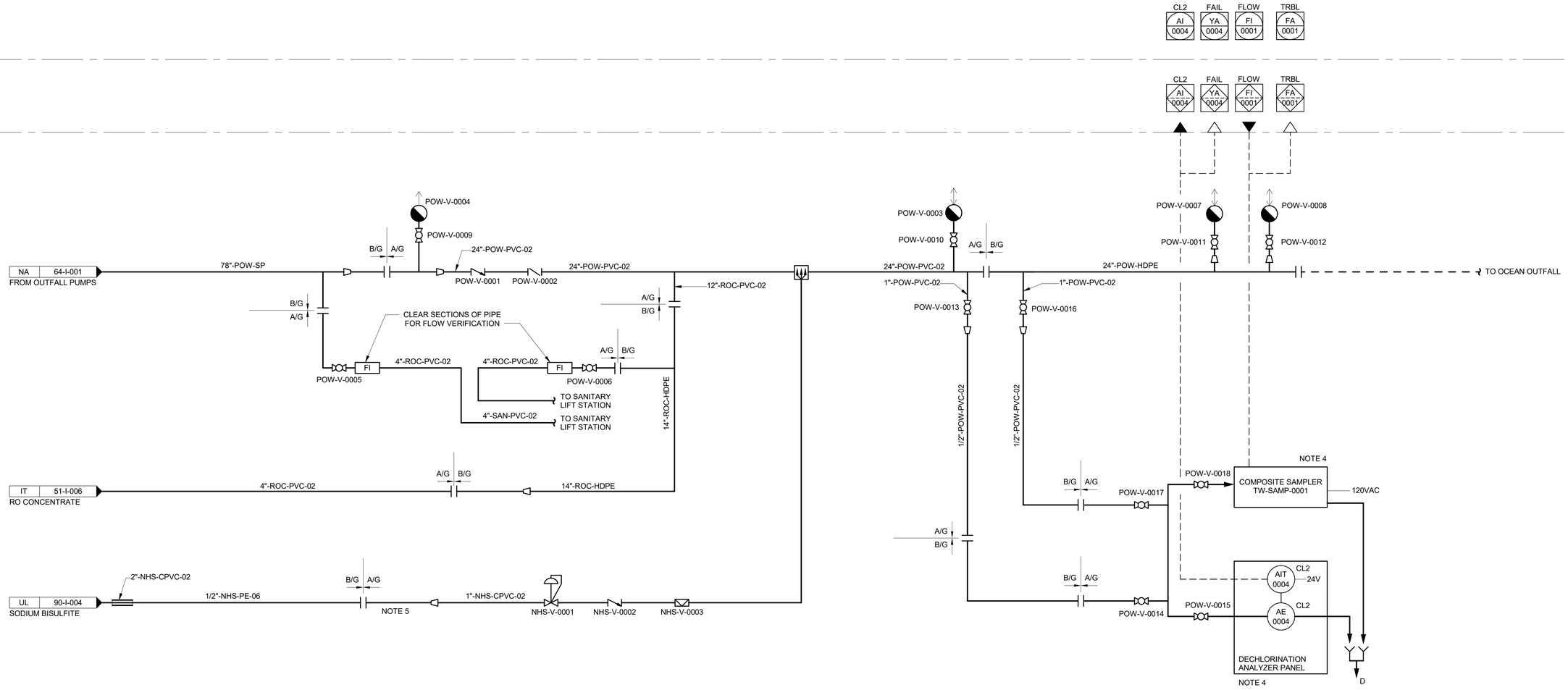

NOTES:

1. SEE LEGEND AND ABBREVIATIONS ON DRAWING 00-I-001, 00-I-002 AND 00-I-003.
2. AREA CODE IS 65 UNLESS OTHERWISE NOTED. SYSTEM CODE IS TW UNLESS OTHERWISE NOTED.
3. LOCAL CONTROL DEVICES SUCH AS INDICATING LIGHTS AND SWITCHES, LOCATED ON MCC's OR AT DRIVEN EQUIPMENT, MAY NOT BE SHOWN ON THIS P&ID.
4. ANALYZER PANEL AND SAMPLER TO BE LOCATED INSIDE STORAGE BUILDING.
5. ABOVE GRADE SODIUM BIFULFITE CPVC PIPING, VALVES AND APPUTERNANCES SHALL BE HEAT TRACED FOLLOWING ELECTRICAL SPECIFICATION 260511.

NO.	BY	CHK	APP
0	BLB	JSM	BLB

5/19/2020 ISSUED FOR CONSTRUCTION
DATE REVISIONS AND RECORD OF USE

REGISTERED PROFESSIONAL ENGINEER
BRIAN L. BUTLER
No. E 16569
ELECTRICAL
STATE OF CALIFORNIA

BLACK & VEATCH
JOINT VENTURE
BLACK & VEATCH
FILANC

CITY OF MORRO BAY
MORRO BAY WATER
RECLAMATION FACILITY (WRF)

PRODUCT WATER AREA - ISINFECTION SYSTEM
P&ID
OUTFALL DISINFECTION SYSTEM

DESIGNED: BLB, KEZ
DETAILED: PVR
CHECKED: JSM, BDS
APPROVED: BLB
DATE: 5/19/2020

0 1/2 1
IF THIS BAR DOES NOT MEASURE 1" THEN DRAWING IS NOT TO FULL SCALE

PROJECT NO.
400530

65-I-001
SHEET
133 OF 412

PLOTTED: 5/18/2020 5:20:29 PM
D400530

PCS HMI | 72-CTRL-RIO-0001 | 80-CTRL-PLC-0001

LEVEL LI 0201 | FAIL YA 0201 | DO AI 0201 | FAIL YA 0101 | DO AI 0101 | LEVEL LI 0101

IN REMOTE YI 0101 | FAIL YA 0101 | RUNNING YIR 0101 | RUN CMD UCR 0101

IN REMOTE YI 0201 | FAIL YA 0201 | RUNNING YIR 0201 | RUN CMD UCR 0201

71-ELEC-MCC-0001

PD | 71-I-003
FROM SLUDGE HOLDING TANK BLOWERS

4"-AA-SS-02

RB | 73-I-001
FROM SAFE SOLIDS AND BACKWASH

6"-FBW-PVC-02

B/G | A/G | 6"-FBW-DIP | FBW-V-0101

3"-WAS-PVC-02 | WAS-V-0101

24V | AIT 0101 | DO

AE 0101 | DO

LIT 0101 | RAD

MSH 0101 | TSH 0101

HS 0101 | * E-STOP

CONTRACTOR SCOPE (TYP)

DIFFUSER VENDOR SCOPE (TYP)

MIXER WAS-MXR-0101

SLUDGE HOLDING TANK NO. 1

WAS-V-0102

4"-AWS-DIP

PC | 72-I-001
TO DEWATERING SLUDGE FEED PUMPS

6"-FBW-PVC-02

4"-AWS-DIP

PE | 71-I-003
FROM SLUDGE HOLDING TANK BLOWERS

4"-AA-SS-02

B/G | A/G | 6"-FBW-DIP | FBW-V-0201

EI | 31-I-003
WAS FROM MBR

3"-WAS-PVC-02 | B/G | A/G | 3"-WAS-PVC-02

WAS-V-0001

WAS-V-0201

24V | AIT 0201 | DO

AE 0201 | DO

LIT 0201 | RAD

MSH 0201 | TSH 0201

HS 0201 | * E-STOP

CONTRACTOR SCOPE (TYP)

DIFFUSER VENDOR SCOPE (TYP)

4"-AWS-DIP

MIXER WAS-MXR-0201

SLUDGE HOLDING TANK NO. 2

WAS-V-0202

HG | 34-I-001
FROM RECYCLED WATER PUMPS

2"-PRW-PVC-02 | TO SLUDGE HOLDING TANKS HOSE BIBBS

3"-WAS-PVC-02

PF | 72-I-001
TO DEWATERING SLUDGE FEED PUMPS

NOTES:

1. SEE LEGEND ON DRAWINGS 00-I-001, 00-I-002 AND 00-I-003.
2. AREA CODE IS 71 UNLESS OTHERWISE NOTED. SYSTEM CODE IS WAS UNLESS OTHERWISE INDICATED.
3. LOCAL CONTROL DEVICES SUCH AS INDICATING LIGHTS AND SWITCHES, LOCATED ON MCC'S OR AT DRIVEN EQUIPMENT, MAY NOT BE SHOWN ON THIS P&ID.

NO.	BY	CHK	APP
0	BLB	JSM	BLB

REVISIONS AND RECORD OF USE

5/19/2020 | ISSUED FOR CONSTRUCTION | DATE

REGISTERED PROFESSIONAL ENGINEER
BRIAN L. BUTLER
No. E 16569
ELECTRICAL
STATE OF CALIFORNIA

BLACK & VEATCH
JOINT VENTURE
BLACK & VEATCH
FILANC

CITY OF MORRO BAY
MORRO BAY WATER RECLAMATION FACILITY (WRF)

RESIDUALS AREA - SLUDGE & SAFE SETTLE TANKS
P&ID
SLUDGE HOLDING TANKS

DESIGNED: BLB, KEZ
DETAILED: PVR
CHECKED: JSM,BDS
APPROVED: BLB
DATE: 5/19/2020

0 1/2 1
IF THIS BAR DOES NOT MEASURE 1" THEN DRAWING IS NOT TO FULL SCALE

PROJECT NO. 400530

71-I-001
SHEET 134 OF 412

PLOTTED: 5/18/2020 5:26:43 PM
D400530

PCS HMI

72-CTRL-RIO-0001

LEVEL
LI
0001



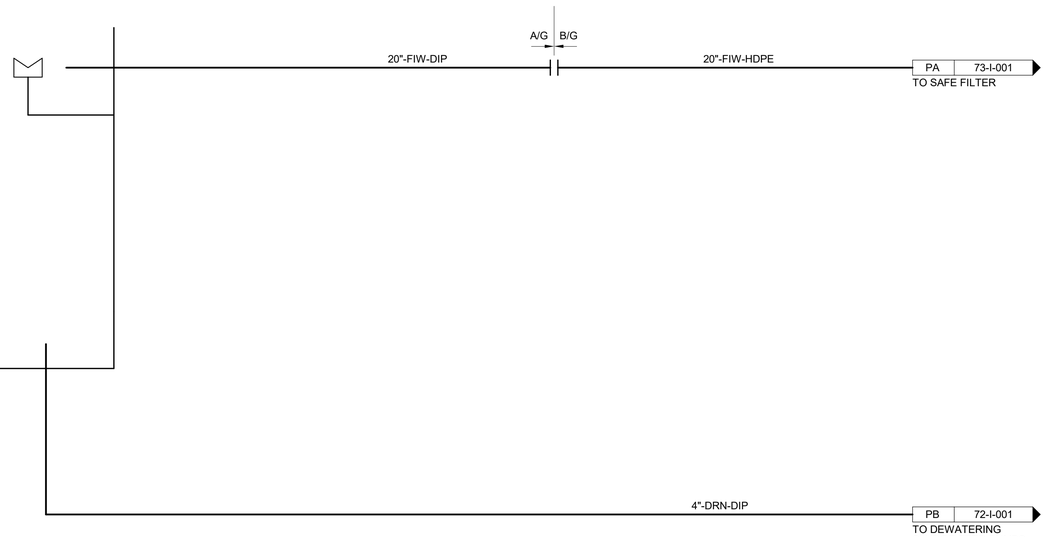

NOTES:

1. SEE LEGEND ON DRAWINGS 00-I-001, 00-I-002 AND 00-I-003.
2. AREA CODE IS 71 UNLESS OTHERWISE NOTED. SYSTEM CODE IS WAS UNLESS OTHERWISE INDICATED.
3. LOCAL CONTROL DEVICES SUCH AS INDICATING LIGHTS AND SWITCHES, LOCATED ON MCC'S OR AT DRIVEN EQUIPMENT, MAY NOT BE SHOWN ON THIS P&ID.

PLOTTED: 5/18/2020 5:26:43 PM
D400530

NO.	BY	CHK	APP
0	BLB	JSM	BLB

DATE	REVISIONS AND RECORD OF USE
5/19/2020	ISSUED FOR CONSTRUCTION

REGISTERED PROFESSIONAL ENGINEER
BRIAN L. BUTLER
No. E 16569
ELECTRICAL
STATE OF CALIFORNIA

BLACK & VEATCH
JOINT VENTURE
BLACK & VEATCH
FILANC

CITY OF MORRO BAY
MORRO BAY WATER
RECLAMATION FACILITY (WRF)

RESIDUALS AREA - SLUDGE & SAFE SETTLE TANKS
P&ID
SAFE SETTLE SYSTEM

DESIGNED: BLB, KEZ
DETAILED: PVR
CHECKED: JSM, BDS
APPROVED: BLB
DATE: 5/19/2020

0 1/2 1
IF THIS BAR DOES NOT MEASURE 1" THEN DRAWING IS NOT TO FULL SCALE

PROJECT NO.
400530

71-I-002
SHEET
135 OF 412

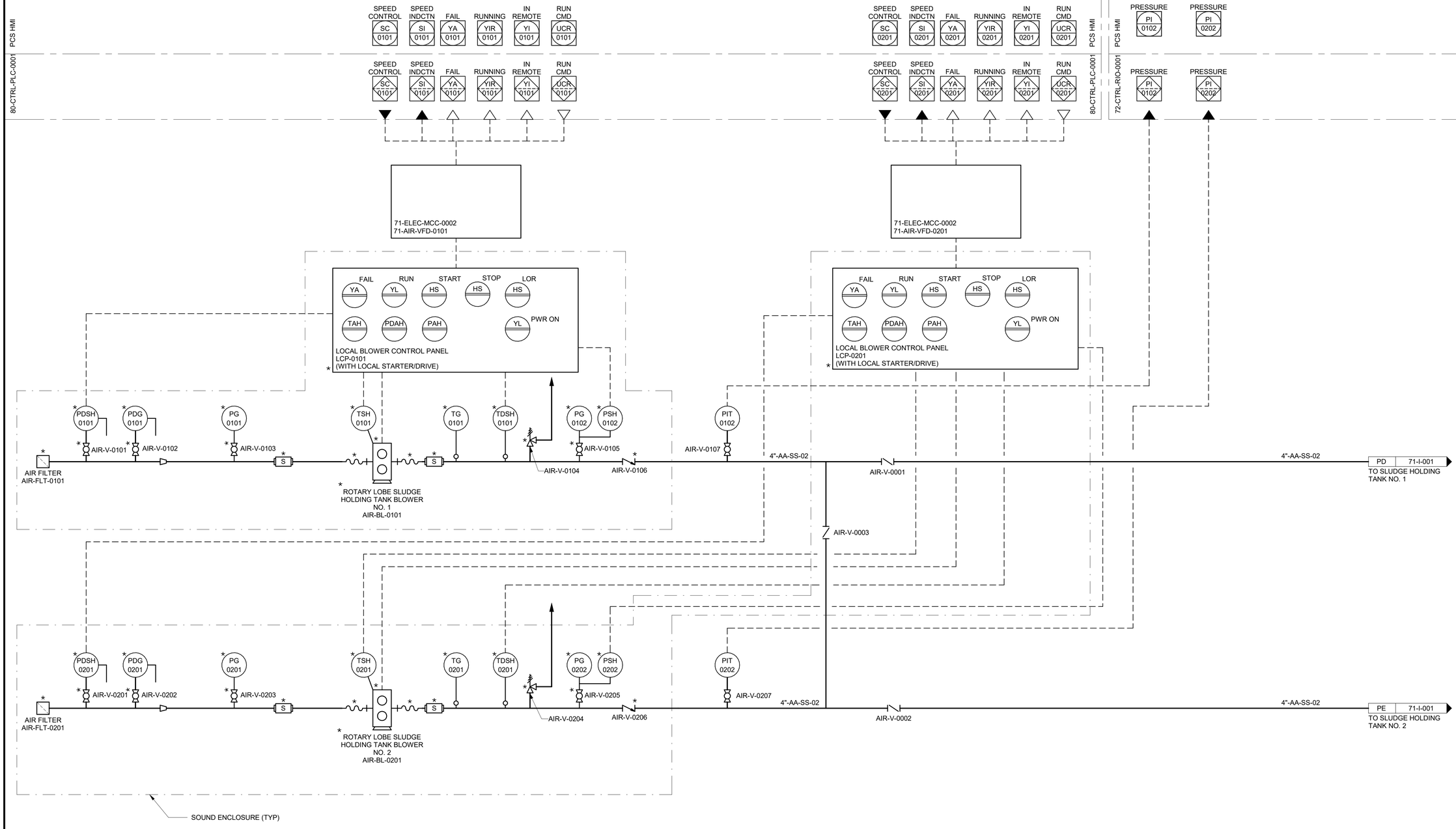

NOTES:

1. SEE LEGEND ON DRAWINGS 00-I-001, 00-I-002 AND 00-I-003.
2. AREA CODE IS 71 UNLESS OTHERWISE NOTED. SYSTEM CODE IS AIR UNLESS OTHERWISE INDICATED.
3. LOCAL CONTROL DEVICES SUCH AS INDICATING LIGHTS AND SWITCHES, LOCATED ON MCC'S OR AT DRIVEN EQUIPMENT, MAY NOT BE SHOWN ON THIS P&ID.

*PROVIDED BY ROTARY POSITIVE DISPLACEMENT BLOWER SUPPLIER.

NO.	BY	CHK	APP'D
0	BLB	JSM	BLB

REVISIONS AND RECORD OF USE

ISSUED FOR CONSTRUCTION 5/19/2020

BRIAN L. BUTLER No. E 16569 REGISTERED PROFESSIONAL ENGINEER ELECTRICAL STATE OF CALIFORNIA

BLACK & VEATCH JOINT VENTURE

BLACK & VEATCH FILANC

CITY OF MORRO BAY
MORRO BAY WATER
RECLAMATION FACILITY (WRF)

RESIDUALS AREA - SLUDGE & SAFE SETTLE TANKS
P&ID
SLUDGE HOLDING TANK BLOWERS

DESIGNED: BLB, KEZ
DETAILED: PVR
CHECKED: JSM, BDS
APPROVED: BLB
DATE: 5/19/2020

0 1/2 1
IF THIS BAR DOES NOT MEASURE 1" THEN DRAWING IS NOT TO FULL SCALE

PROJECT NO. 400530

71-I-003
SHEET 136 OF 412

PLOTTED: 5/19/2020 2:05:23 PM
D400530

PCS HMI

*72-DWT-PLC-0001

IN REMOTE YI 0201 | RUNNING YIR 0201 | FAIL YA 0201 | RUN CMD UCR 0201 | SPEED FEEDBACK SI 0201 | SPEED SETPT SC 0201

IN REMOTE YI 0101 | RUNNING YIR 0101 | FAIL YA 0101 | RUN CMD UCR 0101 | SPEED FEEDBACK SI 0101 | SPEED SETPT SC 0101

FLOW FI 0001

HH 34-I-001
FROM RECYCLED WATER PUMPS

2"-PRW-PVC-02

TO DEWATERING FACILITY HOSE BIBBS

A
B
PRW CONNECTIONS ON THIS SHEET

PC 71-I-001
FROM SLUDGE HOLDING TANKS

4"-AWS-DIP

DWT-V-0004

DWT-V-0008

PB 71-I-002
FROM SAFE SETTLE

4"-DRN-DIP

480V

*72-DWT-LCP-0101

*PSL 0101

*FSL 0101

*TSH 0101

RUPTURE DISC

*DWT-V-0105

1"-DWT-DIP

*PSH 0102

*PG 0102

A

DWT-V-0109

*DWT-RD-0101

*DWT-V-0104

6"-AWS-DIP

DWT-V-0101

DWT-V-0102

6"-AWS-DIP

0103

*DEWATERING SLUDGE FEED PUMP NO.1 DWT-P-0101

0106

*DWT-V-0107

DWT-V-0108

*FIT 0001

24V

*FE 0001

6"-AWS-DIP

DWT-V-0007

DWT-V-0003

M

6"

6"-AWS-DIP

QA 72-I-002
TO BELT FILTER PRESS FEED

DWT-V-0002

2"-DWT-DIP

D

DWT-V-0005

2"-DWT-DIP

D

480V

*72-DWT-LCP-0201

*PSL 0201

*FSL 0201

*TSH 0201

RUPTURE DISC

*DWT-V-0205

1"-DWT-DIP

*PSH 0202

*PG 0202

B

DWT-V-0209

*DWT-RD-0201

*DWT-V-0204

6"-AWS-DIP

DWT-V-0208

6"-WWS-DIP

6"-WWS-PVC-02

QB 22-I-001
TO SAFE BOX

DWT-V-0201

6"-AWS-DIP

DWT-V-0202

0203

*DEWATERING SLUDGE FEED PUMP NO.2 DWT-P-0201

0206

DWT-V-0207

PF 71-I-001
WAS FROM MBR

3"-WAS-DIP

NOTES:

1. SEE LEGEND ON DRAWINGS 00-I-001, 00-I-002 AND 00-I-003.
2. AREA CODE IS 72 UNLESS OTHERWISE NOTED. SYSTEM CODE IS DWT UNLESS OTHERWISE INDICATED.
3. LOCAL CONTROL DEVICES SUCH AS INDICATING LIGHTS AND SWITCHES, LOCATED ON MCC'S OR AT DRIVEN EQUIPMENT, MAY NOT BE SHOWN ON THIS P&ID.

*ITEM FURNISHED BY DEWATERING SYSTEM SUPPLIER

NO.	BY	CHK	APP'D
0	BLB	JSM	BLB

DATE	REVISIONS AND RECORD OF USE
5/19/2020	ISSUED FOR CONSTRUCTION

REGISTERED PROFESSIONAL ENGINEER
BRIAN L. BUTLER
No. E 16569
ELECTRICAL
STATE OF CALIFORNIA

BLACK & VEATCH JOINT VENTURE
BLACK & VEATCH
FILANC

CITY OF MORRO BAY
MORRO BAY WATER RECLAMATION FACILITY (WRF)

RESIDUALS AREA - DEWATERING SYSTEM P&ID
DEWATERING SLUDGE FEED PUMPS

DESIGNED: BLB, KEZ
DETAILED: PVR
CHECKED: JSM, BDS
APPROVED: BLB
DATE: 5/19/2020

0 1/2 1
IF THIS BAR DOES NOT MEASURE 1" THEN DRAWING IS NOT TO FULL SCALE

PROJECT NO. 400530

72-I-001
SHEET 137 OF 412

PLOTTED: 5/18/2020 5:26:45 PM
D400530

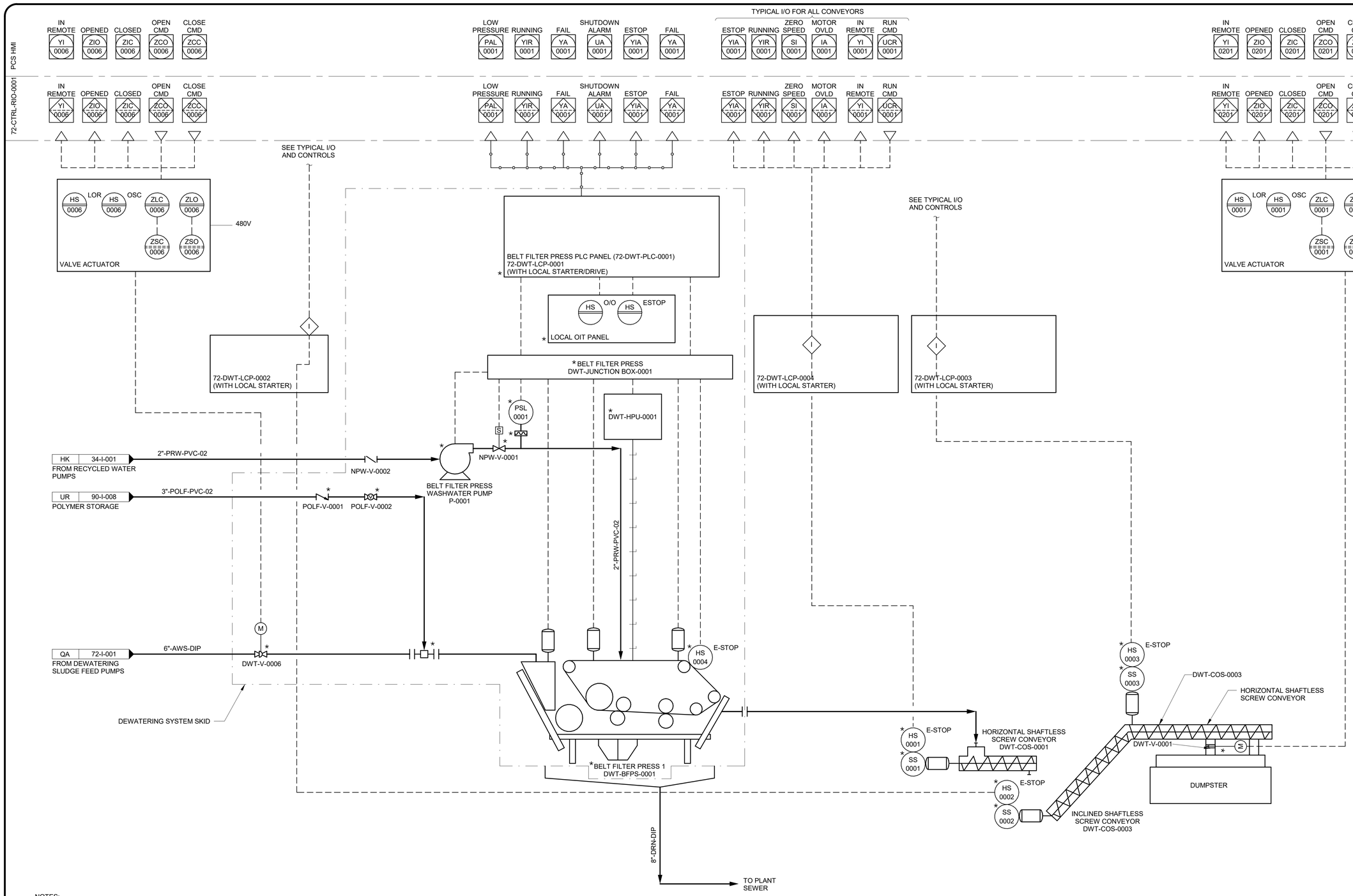

NOTES:

1. SEE LEGEND ON DRAWINGS 00-I-001, 00-I-002 AND 00-I-003.
2. AREA CODE IS 72 UNLESS OTHERWISE NOTED. SYSTEM CODE IS DWT UNLESS OTHERWISE INDICATED.
3. LOCAL CONTROL DEVICES SUCH AS INDICATING LIGHTS AND SWITCHES, LOCATED ON MCC'S OR AT DRIVEN EQUIPMENT, MAY NOT BE SHOWN ON THIS P&ID.
4. BELT FILTER PRESS PACKAGE PLANT I/O MAY VARY BASE ON FINAL VENDOR DESIGN.

* ITEM FURNISHED BY DEWATERING SYSTEM SUPPLIER

NO.	BY	CHK	APP
0	BLB	JSM	BLB

REVISIONS AND RECORD OF USE

ISSUED FOR CONSTRUCTION 5/19/2020

DATE

REGISTERED PROFESSIONAL ENGINEER
BRIAN L. BUTLER
No. E 16569
ELECTRICAL
STATE OF CALIFORNIA

BLACK & VEATCH
JOINT VENTURE
BLACK & VEATCH
FILANC

CITY OF MORRO BAY
MORRO BAY WATER RECLAMATION FACILITY (WRF)

RESIDUALS AREA - DEWATERING SYSTEM
P&ID
BELT FILTER PRESS

DESIGNED: BLB, KEZ
DETAILED: PVR
CHECKED: JSM, BDS
APPROVED: BLB
DATE: 5/19/2020

0 1/2 1
IF THIS BAR DOES NOT MEASURE 1" THEN DRAWING IS NOT TO FULL SCALE

PROJECT NO.
400530

72-I-002
SHEET
138 OF 412

PLOTTED: 5/18/2020 5:26:46 PM
D400530

PCS HMI

72-CTRL-RIO-0001

TYPICAL I/O FOR 0001, 0002, 0003, 0004, 0005, 0006, 0011, 0014 VALVE

IN REMOTE YI 0001 | RUNNING YIR 0001 | FAIL YA 0001 | START CMD UCS 0001 | STOP CMD UCS 0001 | LEVEL LI 0001 | HIGH FLOW FAH 0001 | HIGH LEVEL LAH 0001 | VIBRATION VI 0001 | pH AI 0001

IN REMOTE YI 0001 | RUNNING YIR 0001 | FAIL YA 0001 | HI PRESSURE PAH 0003

START CMD UCS 0002 | STOP CMD UCS 0002 | IN REMOTE YI 0002 | RUNNING YIR 0002 | FAIL YA 0002 | HI PRESSURE PAH 0004

FLOW FI 0001 | PRESSURE PI 0001 | PRESSURE PI 0002 | FLOW FI 0002 | FLOW FI 0003

IN REMOTE YI 0007 | OPENED ZIO 0007 | CLOSED ZIC 0007 | OPEN CMD ZCO 0007 | CLOSE CMD ZCC 0007

ETHERNET/IP

CONTROL PANEL (73-FSW-PLC-0001)
73-FSW-LCP-0001
(WITH LOCAL STARTER/DRIVE)

* (WITH LOCAL STARTER/DRIVE)

HS 0002 | LOR | HS 0002 | OSC | ZLC 0002 | ZLO 0002 | ZSC 0002 | ZSO 0002

VALVE ACTUATOR

480V

24V — FIT 0001 — FE 0001

FOW-V-001

24"-FOW-DIP — 14"-FOW-DIP — 14" — 20"-FOW-DIP — 20"-FOW-HDPE

RA | 64-I-001
TO OUTFALL PUMP STATION

HS 0007 | LOR | HS 0007 | OSC | ZLC 0007 | ZLO 0007 | ZSC 0007 | ZSO 0007

VALVE ACTUATOR

480V

A/G B/G

A B

EFFLUENT CHAMBER

SCUM BOX

M — SCUM VALVE — FSW-V-0007

8"-FSCM-DIP

6"-FSW-DIP — FSW-V-0002

SEE TYPICAL VALVE ACTUATOR AND I/O

LSH 0001

pH — 24V — AIT 0001 — AE 0001

FS 0001

VIT 0001

LIT 0001 — LE 0001

* DISK FILTER NO. 1
73-FSW-FLT-0001
FSW

SEE TYPICAL VALVE ACTUATOR AND I/O

6"-FBW-DIP — FSW-V-0003

6"-FBW-DIP — FSW-V-0004

6"-FBW-DIP — FSW-V-0005

6"-FSW-DIP

PIT 0001 — 4"-FSW-DIP — FSW-V-0009

FILTER SOLIDS WASTE PUMP FSW-P-0001

PSH 0003 — PG 0003 — 4"-FSW-DIP

FIT 0002 — 24V — FE 0002 — 6" — FSW-V-0010

SEE TYPICAL VALVE ACTUATOR AND I/O — DISCHARGE VALVE — 6"-FSW-DIP — FSW-V-0011

A\G B\G

PIT 0002 — 6"-FBW-DIP — FSW-V-0012

4"-FBW-DIP — FILTER BACKWASH WASTE PUMP FSW-P-0002

PSH 0004 — PG 0004 — 4"-FBW-DIP

FIT 0003 — 24V — FE 0003 — 6" — FSW-V-0012

2"-FBW-PVC-02 — FSW-V-0013 — TO PLANT DRAIN

SEE TYPICAL VALVE ACTUATOR AND I/O — DISCHARGE VALVE — A\G B\G — 6"-FBW-PVC-02

6"-FBW-DIP — FSW-V-0014

RB | 71-I-001
TO SLUDGE HOLDING TANK

SEE TYPICAL VALVE ACTUATOR AND I/O — RECIRCULATION VALVE — FSW-V-0006

6"-FBW-DIP

24"-FIW-DIP — FSW-V-0001

B/G A/G

PA | 71-I-002
FROM SAFE SETTLE

20"-FIW-HDPE — 20"-FIW-DIP — 6"-FIW-DIP — FSW-V-0008

HI | 34-I-001
FROM RECYCLED WATER PUMPS

2"-PRW-PVC-02 — TO SAFE FILTER SYSTEM HOSE BIBBS

6"-DRN-DIP

8"-DRN-DIP — 8"-DRN-PVC — TO PLANT SEWER

NOTES:

1. SEE LEGEND AND ABBREVIATIONS ON DRAWINGS 00-I-001, 00-I-002 AND 00-I-003.
2. AREA CODE IS 73 UNLESS OTHERWISE NOTED. SYSTEM CODE IS FSW UNLESS OTHERWISE NOTED.
3. LOCAL CONTROL DEVICES SUCH AS INDICATING LIGHTS AND SWITCHES, LOCATED ON MCCs OR AT DRIVEN EQUIPMENT, MAY NOT BE SHOWN ON THIS P&ID.

* ITEM SUPPLYED BY SAFE FILTER SUPPLIER

NO.	BY	CHK	APP
0	BLB	JSM	BLB

REVISIONS AND RECORD OF USE

ISSUED FOR CONSTRUCTION — 5/19/2020

DATE

REGISTERED PROFESSIONAL ENGINEER
BRIAN L. BUTLER
No. E 16569
ELECTRICAL
STATE OF CALIFORNIA

BLACK & VEATCH
JOINT VENTURE
BLACK & VEATCH
FILANC

CITY OF MORRO BAY
MORRO BAY WATER
RECLAMATION FACILITY (WRF)

RESIDUALS AREA - SAFE FILTER SYSTEM
P&ID
SAFE SYSTEM

DESIGNED: BLB, KEZ
DETAILED: PVR
CHECKED: JSM, BDS
APPROVED: BLB
DATE: 5/19/2020

0 1/2 1
IF THIS BAR DOES NOT MEASURE 1" THEN DRAWING IS NOT TO FULL SCALE

PROJECT NO.
400530

73-I-001
SHEET
139 OF 412

PLOTTED: 5/18/2020 5:26:47 PM
D400530

PCS HMI

80-CTRL-PLC-0001

VOLTAGE EI 0001 | CURRENT II 0001 | POWER FACTOR JI 0001 | KW JI 0001 | GEN FAIL YA 0001 | GEN. RUNNING YIR 0001 | HI-HI LEVEL LAHH 0001 | LOW LEVEL LSL 0001 | LEAK DETECTED MAH 0002 | GEN BRKR OPEN YA 0001 | GEN BRKR CLOSED YA 0001 | BATTERY FAIL YA 0001 | ATS FAIL YA 0001 | GEN. POWER YI 0001 | NORMAL POWER UA 0001

PCS HMI

80-CTRL-PLC-0001

VOLTAGE EI 0001 | CURRENT II 0001 | POWER FACTOR JI 0001 | KW JI 0001 | GEN FAIL YA 0001 | GEN. RUNNING YIR 0001 | HI-HI LEVEL LAHH 0001 | LOW LEVEL LSL 0001 | LEAK DETECTED MAH 0002 | GEN BRKR OPEN YA 0001 | GEN BRKR CLOSED YA 0001 | BATTERY FAIL YA 0001 | ATS FAIL YA 0001 | GEN. POWER YI 0001 | NORMAL POWER UA 0001

SECONDARY TANK VENT

SECONDARY TANK EMERGENCY VENT

PRIMARY TANK VENT

PRIMARY TANK EMERGENCY VENT

ETHERNET/IP

HORN WITH SILENCE PUSH BUTTON

* AAX 0001 * HMS 0001

* HS 0001 E-STOP ES REMOTE SHUTDOWN SWITCH

TRANSFER SWITCH 81-GEN-ATS-0001

* LI 0001

LOCAL CONTROL PANEL 80-GEN-LCP-0001

120V

SEE SPEC 26 32 13 FOR CONTROL PANEL DETAILS AND INTERLOCK LOGIC

BATTERY CHARGER

ENGINE GENERATOR 81-GEN-GEN-0001

ENGINE SUPPLY

RETURN FROM ENGINE

FILTER SEPARATOR

FUEL OIL COOLER (IF REQUIRED)

GEN-DF

GEN-DF

SECONDARY CONTAINMENT TESTING WITH CAP

ELECTRICALLY OPERATED SHUT OFF VALVE

FILL QUICK COUPLING

FUEL FILL ACCESS DOOR

PUMP OUT WITH CAP

SPILL CONTAINMENT BOX

FUE-V-0003 M

FUE-V-0002

FUE-V-0001

SPARE CONNECTION WITH BLIND FLANGE

SPARE CONNECTION WITH CAPS

* LIT 0001 * TSH 0001 * TSL 0001

120V

* LSHH 0001 * LSH 0001 * LSL 0001

SUB-BASE FUEL STORAGE TANK 81-GEN-TNK-0001

* LSH 0002

SECONDARY CONTAINMENT TANK

TANK ACCESS WITH BLIND FLANGE

PRIMARY FUEL TANK

TANK HEATER

FOOT VALVE

LEAK DETECTION

ENGINE - GENERATOR ENCLOSURE

NOTES:

1. SEE LEGEND AND ABBREVIATIONS ON DRAWING 00-I-001, 00-I-002 AND 00-I-003.
2. AREA CODE IS 81 UNLESS OTHERWISE NOTED. SYSTEM CODE IS FO UNLESS OTHERWISE NOTED.
3. LOCAL CONTROL DEVICES SUCH AS INDICATING LIGHTS AND SWITCHES, LOCATED IN MCC's OR AT DRIVEN EQUIPMENT MAY NOT INDICATED ON THIS P&ID.

NO.	BY	CHK	APP
0	BLB	JSM	BLB

REVISIONS AND RECORD OF USE

ISSUED FOR CONSTRUCTION — 5/19/2020

DATE

REGISTERED PROFESSIONAL ENGINEER — BRIAN L. BUTTERS — No. E 16569 — ELECTRICAL — STATE OF CALIFORNIA

BLACK & VEATCH

JOINT VENTURE

BLACK & VEATCH

FILANC

CITY OF MORRO BAY
MORRO BAY WATER RECLAMATION FACILITY (WRF)

MISCELLANEOUS - GENERATOR P&ID
GENERATOR SYSTEM

DESIGNED: ME, DAV, JL, BLB
DETAILED: PVR
CHECKED: JSM, BDS
APPROVED: BLB
DATE: 5/19/2020

0 1/2 1

IF THIS BAR DOES NOT MEASURE 1" THEN DRAWING IS NOT TO FULL SCALE

PROJECT NO. 400530

81-I-001

SHEET 140 OF 412

PLOTTED: 5/18/2020 5:39:28 PM

D400530

TYPICAL FOR 80-ELEC-SWB-0001 & 80-ELEC-MCC-0002

PCS HMI

PHASE CURRENT AI 0001A | PHASE CURRENT AI 0001B | PHASE CURRENT AI 0001C | PHASE VOLTAGE AI 0001A | PHASE VOLTAGE AI 0001B | PHASE VOLTAGE AI 0001C | WATT AI 0001 | VAR AI 0001 | POWER FACTOR AI 0001 | WATT HOURS AI 0001 | WATT DEMAND AI 0001 | FREQUENCY AI 0001

80-CTRL-PLC-0001

PHASE CURRENT AI 0001A | PHASE CURRENT AI 0001B | PHASE CURRENT AI 0001C | PHASE VOLTAGE AI 0001A | PHASE VOLTAGE AI 0001B | PHASE VOLTAGE AI 0001C | WATT AI 0001 | VAR AI 0001 | POWER FACTOR AI 0001 | WATT HOURS AI 0001 | WATT DEMAND AI 0001 | FREQUENCY AI 0001

SEE TYPICAL I/Os & CONTROLS

ETHERNET/IP

80-ELEC-SWB-0001

ETHERNET/IP

80-ELEC-MCC-0001

PCS HMI

PHASE CURRENT AI 0001A | PHASE CURRENT AI 0001B | PHASE CURRENT AI 0001C | PHASE VOLTAGE AI 0001A | PHASE VOLTAGE AI 0001B | PHASE VOLTAGE AI 0001C | WATT AI 0001 | VAR AI 0001 | POWER FACTOR AI 0001 | WATT HOURS AI 0001 | WATT DEMAND AI 0001 | FREQUENCY AI 0001

80-CTRL-PLC-0001

PHASE CURRENT AI 0001A | PHASE CURRENT AI 0001B | PHASE CURRENT AI 0001C | PHASE VOLTAGE AI 0001A | PHASE VOLTAGE AI 0001B | PHASE VOLTAGE AI 0001C | WATT AI 0001 | VAR AI 0001 | POWER FACTOR AI 0001 | WATT HOURS AI 0001 | WATT DEMAND AI 0001 | FREQUENCY AI 0001

SEE TYPICAL I/Os & CONTROLS

ETHERNET/IP

80-ELEC-MCC-0002

PCS HMI

PHASE CURRENT AI 0001A | PHASE CURRENT AI 0001B | PHASE CURRENT AI 0001C | PHASE VOLTAGE AI 0001A | PHASE VOLTAGE AI 0001B | PHASE VOLTAGE AI 0001C | WATT AI 0001 | VAR AI 0001 | POWER FACTOR AI 0001 | WATT HOURS AI 0001 | WATT DEMAND AI 0001 | FREQUENCY AI 0001

50-CTRL-RIO-0001

PHASE CURRENT AI 0001A | PHASE CURRENT AI 0001B | PHASE CURRENT AI 0001C | PHASE VOLTAGE AI 0001A | PHASE VOLTAGE AI 0001B | PHASE VOLTAGE AI 0001C | WATT AI 0001 | VAR AI 0001 | POWER FACTOR AI 0001 | WATT HOURS AI 0001 | WATT DEMAND AI 0001 | FREQUENCY AI 0001

ETHERNET/IP

50-ELEC-MCC-0001

NO.	BY	CHK	APP
0	BLB	JSM	BLB

REVISIONS AND RECORD OF USE

ISSUED FOR CONSTRUCTION 5/19/2020

DATE

REGISTERED PROFESSIONAL ENGINEER BRIAN L. BUTLER No. E 16569 Exp. 03/31/20 ELECTRICAL STATE OF CALIFORNIA

BLACK & VEATCH JOINT VENTURE BLACK & VEATCH FILANC

CITY OF MORRO BAY
MORRO BAY WATER
RECLAMATION FACILITY (WRF)

MISCELLANEOUS - ELECTRICAL
P&ID
SWITCHBOARD & MCCS

DESIGNED: BLB
DETAILED: PVR
CHECKED: JSM, BDS
APPROVED: BLB
DATE: 5/19/2020

0 1/2 1
IF THIS BAR DOES NOT MEASURE 1" THEN DRAWING IS NOT TO FULL SCALE

PROJECT NO.
400530

81-I-002
SHEET
141 OF 412

GAW78494, 12/19/2019 3:45:56 PM
GAW78494, 10/10/2019 12:05:16 PM
GAW78494

D400530

PCS HMI

LEVEL	LEVEL HIGH	SPEED FEEDBACK	SPEED SETPT	RUNNING	FAIL	IN REMOTE	RUN CMD	HI PRESSURE	LEAK DETECTED	SPEED FEEDBACK	SPEED SETPT	RUNNING	FAIL	IN REMOTE	RUN CMD	HI PRESSURE	LEAK DETECTED	SPEED FEEDBACK	SPEED SETPT	RUNNING	FAIL	IN REMOTE	RUN CMD	HI PRESSURE	LEAK DETECTED	LEAK DETECTED	EYEWASH FLOW
LI 0001	LAH 0002	SI 0101	SC 0101	YIR 0101	YA 0101	YI 0101	UCR 0101	PAH 0101	MAH 0101	SI 0201	SC 0201	YIR 0201	YA 0201	YI 0201	UCR 0201	PAH 0201	MAH 0201	SI 0301	SC 0301	YIR 0301	YA 0301	YI 0301	UCR 0301	PAH 0301	MAH 0301	LAH 0001	FAH 0001

90-CTRL-RIO-001

LEVEL	LEVEL HIGH	SPEED FEEDBACK	SPEED SETPT	RUNNING	FAIL	IN REMOTE	RUN CMD	HI PRESSURE	LEAK DETECTED	SPEED FEEDBACK	SPEED SETPT	RUNNING	FAIL	IN REMOTE	RUN CMD	HI PRESSURE	LEAK DETECTED	SPEED FEEDBACK	SPEED SETPT	RUNNING	FAIL	IN REMOTE	RUN CMD	HI PRESSURE	LEAK DETECTED	LEAK DETECTED	EYEWASH FLOW
LI 0001	LAH 0002	SI 0101	SC 0101	YIR 0101	YA 0101	YI 0101	UCR 0101	PAH 0101	MAH 0101	SI 0201	SC 0201	YIR 0201	YA 0201	YI 0201	UCR 0201	PAH 0201	MAH 0201	SI 0301	SC 0301	YIR 0301	YA 0301	YI 0301	UCR 0301	PAH 0301	MAH 0301	LAH 0001	FAH 0001

LAH 0001
AAX 0001 HORN SILENCE HS 0001
LI 0001 LSH 0001
480V
SODIUM HYPOCHLORITE UNLOADING PANEL
NOTE 5

2"-PRW-PVC-02
HJ 34-I-001
FROM RECYCLED WATER PUMPS
TO CHEMICAL FACILITY HOSE BIBBS

2"-NACL-CPVC-02
SODIUM HYPOCHLORITE STORAGE TANK NOCL-T-0001
3"-NACL-CPVC-02
NOCL-V-0004
NOCL-V-0005
NOCL-V-0006
2"-NACL-CPVC-02
LSH 0002
LIT 0001
NOCL-V-0008
NOCL-V-0001
TRUCK FILL SUMP
CONTINUED ON 90-I-003
SAN-V-0011
TO SANITARY SYSTEM VIA MANHOLE 8

90-NOCL-LCP-0101
(INTEGRAL TO PUMP)
90-NOCL-LCP-0201
(INTEGRAL TO PUMP)
90-NOCL-LCP-0301
(INTEGRAL TO PUMP)

1"-NACL-CPVC-02
1"-NACL-CPVC-02
1"-NACL-CPVC-02

PG 0102
NOCL-V-0104
NOCL-V-0105
NOCL-V-0103
PG 0101
PSH 0101
MSH 0101
1/2"-NOCL-CPVC-02
1"-NACL-CPVC-02
NOCL-V-0102
NOCL-V-0101

PG 0202
NOCL-V-0204
NOCL-V-0205
NOCL-V-0203
PG 0201
PSH 0201
MSH 0201
1/2"-NOCL-CPVC-02
1"-NACL-CPVC-02
NOCL-V-0202
NOCL-V-0201

PG 0302
NOCL-V-0304
NOCL-V-0305
NOCL-V-0303
PG 0301
PSH 0301
MSH 0301
1/2"-NOCL-CPVC-02
1"-NACL-CPVC-02
NOCL-V-0302
NOCL-V-0301

NOCL-V-0007
2"-NACL-CPVC-02
UD 90-I-002
TO METERING PUMPS

SODIUM HYPOCHLORITE METERING PUMP NO. 1 NOCL-P-0101
SODIUM HYPOCHLORITE METERING PUMP NO. 2 NOCL-P-0201
SODIUM HYPOCHLORITE METERING PUMP NO. 3 NOCL-P-0301
NOTE 4

120V
1"-PW-CPVC-02
FROM POTABLE WATER SUPPLY
FSH 0001
90-NOCL-EMEW-0001

2"-NACL-CPVC-02
1/2"-NACL-TEFL-01
PLANT PIPING
YARD PIPING
CHH-S1 CHH-S2 CHH-S3
UA 64-I-001
TO OCEAN OUTFALL PIPING

2"-NACL-CPVC-02
1/2"-NACL-TEFL-01
PLANT PIPING
YARD PIPING
CHH-N1
UB 51-I-006
TO RO CONCENTRATE PIPING

LSH 0001
1/2"-NACL-TEFL-01
PLANT PIPING
YARD PIPING
CHH-N1 CHH-N2 CHH-N3 CHH-N4
UC 33-I-001
TO RO FEED PIPING
90-CHEM-LSH-0001
2"-NACL-CPVC-02

NOTES:

1. SEE LEGEND AND ABBREVIATIONS ON DRAWING 00-I-001, 00-I-002 AND 00-I-003.
2. AREA CODE IS 90 UNLESS OTHERWISE NOTED. SYSTEM CODE IS NOCL UNLESS OTHERWISE NOTED.
3. LOCAL CONTROL DEVICES SUCH AS INDICATING LIGHTS AND SWITCHES, LOCATED IN MCC's OR AT DRIVEN EQUIPMENT MAY NOT INDICATED ON THIS P&ID.
4. DETAILS OF FEEDER / BLENDER SKID TO BE CONFIRMED WITH SELECTED VENDOR EQUIPMENT.
5. LOCATE LOCAL LEVEL INDICATION SUCH THAT IT CAN BE VIEWED FROM THE TRUCK UNLOADING CONNECTION.

NO.	BY	CHK	APP
0	BLB	JSM	BLB

DATE	REVISIONS AND RECORD OF USE
5/19/2020	ISSUED FOR CONSTRUCTION

REGISTERED PROFESSIONAL ENGINEER
BRIAN L. BUTLER
No. E 16569
ELECTRICAL
STATE OF CALIFORNIA

BLACK & VEATCH JOINT VENTURE
BLACK & VEATCH
FILANC

CITY OF MORRO BAY
MORRO BAY WATER RECLAMATION FACILITY (WRF)

CHEMICALS - CHEMICAL FACILITY P&ID

SODIUM HYPOCHLORITE STORAGE & FEED 1

DESIGNED: BLB, DAV
DETAILED: PVR
CHECKED: JSM, BDS
APPROVED: BLB
DATE: 5/19/2020

0 1/2 1
IF THIS BAR DOES NOT MEASURE 1" THEN DRAWING IS NOT TO FULL SCALE

PROJECT NO. 400530

90-I-001
SHEET 142 OF 412

PLOTTED: 5/18/2020 5:44:17 PM
D400530

PCS HMI

90-CTRL-RIO-001

SPEED FEEDBACK	SPEED SETPT	RUNNING	FAIL	IN REMOTE	RUN CMD	HI PRESSURE	LEAK DETECTED
SI 0401	SC 0401	YIR 0401	YA 0401	YI 0401	UCR 0401	PAH 0401	MAH 0401
SI 0501	SC 0501	YIR 0501	YA 0501	YI 0501	UCR 0501	PAH 0501	MAH 0501
SI 0601	SC 0601	YIR 0601	YA 0601	YI 0601	UCR 0601	PAH 0601	MAH 0601
SI 0701	SC 0701	YIR 0701	YA 0701	YI 0701	UCR 0701	PAH 0701	MAH 0701

90-NOCL-LCP-0401 (COMMENTS) (INTEGRAL TO PUMP)

90-NOCL-LCP-0501 (COMMENTS) (INTEGRAL TO PUMP)

90-NOCL-LCP-0601 (COMMENTS) (INTEGRAL TO PUMP)

90-NOCL-LCP-0701 (COMMENTS) (INTEGRAL TO PUMP)

UD 90-I-001 — 2"-NACL-CPVC-02 — FROM SODIUM HYPOCHLORITE STORAGE TANK

1"-NACL-CPVC-02

1/2"-NOCL-CPVC-02

PG 0402 — NOCL-V-0404 — NOCL-V-0405 — NOCL-V-0403 — PG 0401 — PSH 0401 — MSH 0401 — NOCL-V-0402 — NOCL-V-0401

PG 0502 — NOCL-V-0504 — NOCL-V-0505 — NOCL-V-0503 — PG 0501 — PSH 0501 — MSH 0501 — NOCL-V-0502 — NOCL-V-0501

PG 0602 — NOCL-V-0604 — NOCL-V-0605 — NOCL-V-0603 — PG 0601 — PSH 0601 — MSH 0601 — NOCL-V-0602 — NOCL-V-0601

PG 0702 — NOCL-V-0704 — NOCL-V-0705 — NOCL-V-0703 — PG 0701 — PSH 0701 — MSH 0701 — NOCL-V-0702 — NOCL-V-0701

SODIUM HYPOCHLORITE METERING PUMP NO. 4 NOCL-P-0401

SODIUM HYPOCHLORITE METERING PUMP NO. 5 NOCL-P-0501

SODIUM HYPOCHLORITE METERING PUMP NO. 6 NOCL-P-0601

SODIUM HYPOCHLORITE METERING PUMP NO. 7 NOCL-P-0701

NOTE 4

2"-NACL-CPVC-02 — 1/2"-NACL-TEFL-01 — PLANT PIPING — YARD PIPING — CHH-N1 (NOTE 5) — UE 52-I-001 TO UV / AOP SYSTEM

2"-NACL-CPVC-02 — 1/2"-NACL-TEFL-01 — PLANT PIPING — YARD PIPING — CHH-S1 (NOTE 5) CHH-S2 CHH-S3 — UF 62-I-001 DISINFECTION OF RO PRODUCT WATER

2"-NACL-CPVC-02 — 3/4"-NACL-TEFL-01 — PLANT PIPING — YARD PIPING — CHH-N1 (NOTE 5) CHH-N2 CHH-N3 CHH-N4 CHH-N5 — UG 32-I-001 TO MBR BACKWASH / CIP

2"-NACL-CPVC-02 — 1/2"-NACL-TEFL-01 — PLANT PIPING — YARD PIPING — CHH-N1 (NOTE 5) CHH-N2 CHH-N3 CHH-N4 — UH 34-I-001 TO ONSITE RECYCLED WATER PUMPS

NOTES:

1. SEE LEGEND AND ABBREVIATIONS ON DRAWING 00-I-001, 00-I-002 AND 00-I-003.
2. AREA CODE IS 90 UNLESS OTHERWISE NOTED. SYSTEM CODE IS NOCL UNLESS OTHERWISE NOTED.
3. LOCAL CONTROL DEVICES SUCH AS INDICATING LIGHTS AND SWITCHES, LOCATED IN MCC's OR AT DRIVEN EQUIPMENT MAY NOT INDICATED ON THIS P&ID.
4. DETAILS OF FEEDER / BLENDER SKID TO BE CONFIRMED WITH SELECTED VENDOR EQUIPMENT.
5. LEAK DETECTION PROVIDED IN THIS CHEMICAL PULL BOX. IO IS SHOWN ON P&ID 90-I-001.

NO.	BY	CHK	APP'D
0	BLB	JSM	BLB

5/19/2020 ISSUED FOR CONSTRUCTION

REVISIONS AND RECORD OF USE

DATE

REGISTERED PROFESSIONAL ENGINEER — BRIAN L. BUTLER — No. E 16569 — ELECTRICAL — STATE OF CALIFORNIA

BLACK & VEATCH

JOINT VENTURE

BLACK & VEATCH

FILANC

CITY OF MORRO BAY
MORRO BAY WATER RECLAMATION FACILITY (WRF)

CHEMICALS - CHEMICAL FACILITY P&ID

SODIUM HYPOCHLORITE STORAGE & FEED 2

DESIGNED: BLB, DAV
DETAILED: PVR
CHECKED: JSM, BDS
APPROVED: BLB
DATE: 5/19/2020

0 1/2 1

IF THIS BAR DOES NOT MEASURE 1" THEN DRAWING IS NOT TO FULL SCALE

PROJECT NO. 400530

90-I-002

SHEET 143 OF 412

PLOTTED: 5/18/2020 5:44:18 PM

D400530

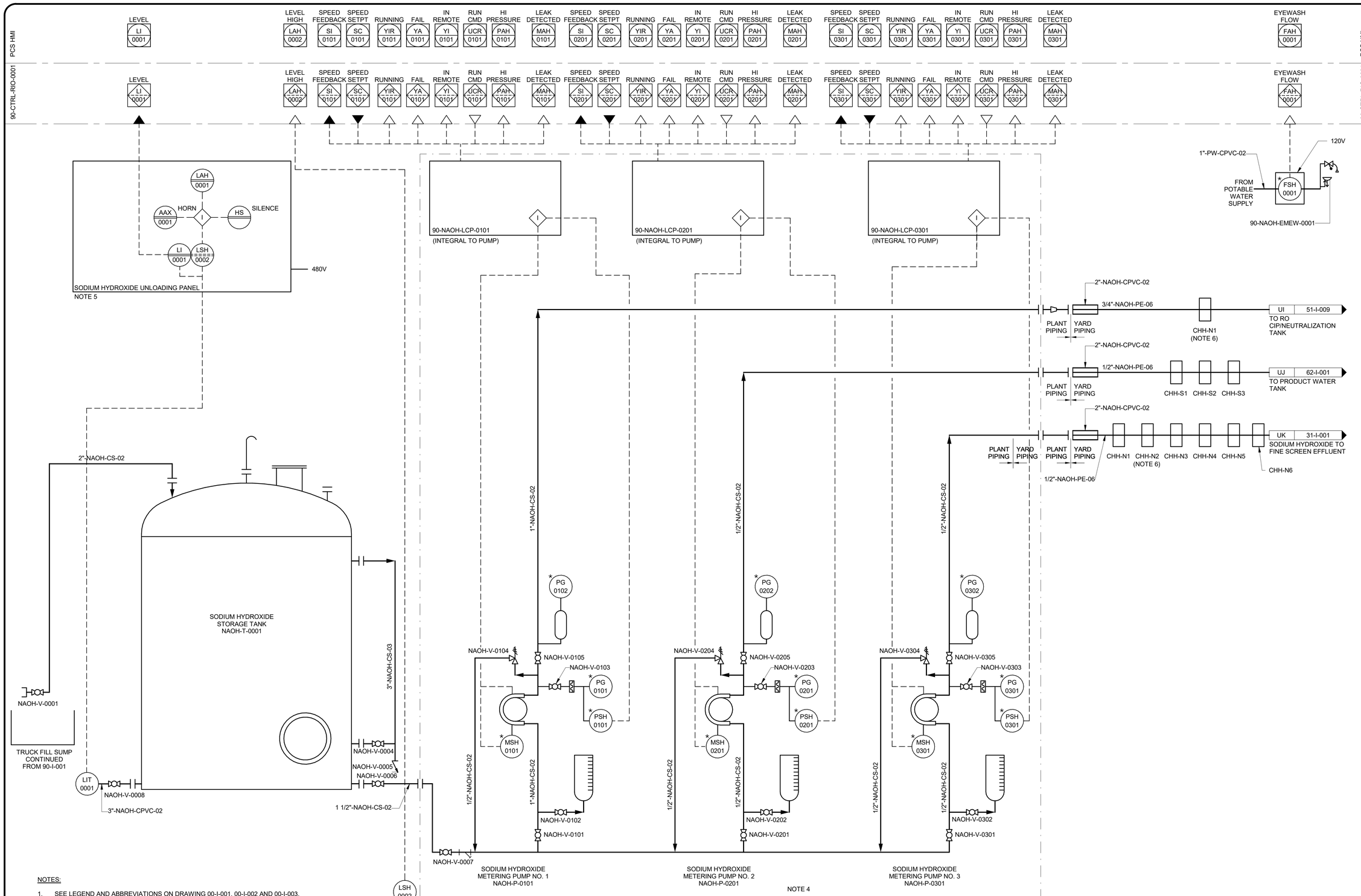

NOTES:

1. SEE LEGEND AND ABBREVIATIONS ON DRAWING 00-I-001, 00-I-002 AND 00-I-003.
2. AREA CODE IS 90 UNLESS OTHERWISE NOTED. SYSTEM CODE IS NAOH UNLESS OTHERWISE NOTED.
3. LOCAL CONTROL DEVICES SUCH AS INDICATING LIGHTS AND SWITCHES, LOCATED IN MCC's OR AT DRIVEN EQUIPMENT MAY NOT INDICATED ON THIS P&ID.
4. DETAILS OF FEEDER / BLENDER SKID TO BE CONFIRMED WITH SELECTED VENDOR EQUIPMENT.
5. LOCATE LOCAL LEVEL INDICATION SUCH THAT IT CAN BE VIEWED FROM THE TRUCK UNLOADING CONNECTION.
6. LEAK DETECTION PROVIDED IN THIS CHEMICAL PULL BOX. IO IS SHOWN ON P&ID 90-I-001.

NO.	BY	CHK	APP
0	BLB	JSM	BLB

DATE	REVISIONS AND RECORD OF USE
5/19/2020	ISSUED FOR CONSTRUCTION

REGISTERED PROFESSIONAL ENGINEER BRIAN L. BUTLER No. E 16569 ELECTRICAL STATE OF CALIFORNIA

BLACK & VEATCH JOINT VENTURE

FILANC

CITY OF MORRO BAY
MORRO BAY WATER RECLAMATION FACILITY (WRF)

CHEMICALS - CHEMICAL FACILITY
P&ID
SODIUM HYDROXIDE STORAGE & FEED

DESIGNED: BLB, DAV
DETAILED: PVR
CHECKED: JSM, BDS
APPROVED: BLB
DATE: 5/19/2020

0 1/2 1
IF THIS BAR DOES NOT MEASURE 1" THEN DRAWING IS NOT TO FULL SCALE

PROJECT NO. 400530

90-I-003

SHEET 144 OF 412

PLOTTED: 5/18/2020 5:44:20 PM
D400530

PCS HMI

90-CTRL-RIO-0001

WEIGHT WI 0001 | WEIGHT WI 0002

SPEED FEEDBACK SI 0001 | SPEED SETPT SC 0001 | RUNNING YIR 0001 | FAIL YA 0001 | IN REMOTE YI 0001 | RUN CMD UCR 0001 | HI PRESSURE PAH 0001 | LEAK DETECTED MAH 0001

SPEED FEEDBACK SI 0002 | SPEED SETPT SC 0002 | RUNNING YIR 0002 | FAIL YA 0002 | IN REMOTE YI 0002 | RUN CMD UCR 0002 | HI PRESSURE PAH 0002 | LEAK DETECTED MAH 0002

EYEWASH FLOW FAH 0001 | LEAK DETECTED LAH 0002

NOTE 6

SODIUM BISULFITE STORAGE TOTE

24V FROM PLC — WIT 0002 — WE 0002

SODIUM BISULFITE SECONDARY CONTAINMENT WITH INTEGRAL SCALE

NHS-V-0002

1"-NHS-CPVC-02

90-NHS-LCP-0001 (INTEGRAL TO PUMP)

90-NHS-LCP-0002 (INTEGRAL TO PUMP)

120V

1"-PW-CPVC-02

FROM POTABLE WATER SUPPLY

FSH 0001

90-NHS-EMEW-0001

NOTE 5

AG

UG

2"-NHS-CPVC-02

1"-NHS-CPVC-02

PG 0002

PG 0004

NHS-V-0007

NHS-V-0008

NHS-V-0006

PG 0001

PSH 0001

MSH 0001

NHS-V-0008

NHS-V-0012

NHS-V-0011

PG 0003

PSH 0002

MSH 0002

1/2"-NHS-CPVC-02

1"-NHS-CPVC-02

NHS-V-0005

NHS-V-0004

NHS-V-0010

NHS-V-0009

CHH-S1

CHH-S2

CHH-S4

CHH-S5

LSH 0002

90-CHEM-LSH-0002

UL | 65-I-001

DECHLORINATION TO OCEAN OUTFALL PIPING

NOTE 6

SODIUM BISULFITE STORAGE TOTE

24V FROM PLC — WIT 0001 — WE 0001

SODIUM BISULFITE SECONDARY CONTAINMENT WITH INTEGRAL SCALE

NHS-V-0001

NHS-V-0003

1"-NHS-CPVC-02

SODIUM BISULFITE METERING PUMP NHS-P-0001

SODIUM BISULFITE METERING PUMP NHS-P-0002

NOTE 4

NOTES:

1. SEE LEGEND AND ABBREVIATIONS ON DRAWING 00-I-001, 00-I-002 AND 00-I-003.
2. AREA CODE IS 90 UNLESS OTHERWISE NOTED. SYSTEM CODE IS NHS UNLESS OTHERWISE NOTED.
3. LOCAL CONTROL DEVICES SUCH AS INDICATING LIGHTS AND SWITCHES, LOCATED ON MCC's OR AT DRIVEN EQUIPMENT, MAY NOT BE SHOWN ON THIS P&ID.
4. DETAILS OF FEEDER / BLENDER SKID TO BE CONFIRMED WITH SELECTED VENDOR EQUIPMENT.
5. ABOVE GRADE SODIUM BIFULFITE CPVC PIPING, VALVES AND APPUTERNANCES SHALL BE HEAT TRACED PER ELECTRICAL SPECIFICATIONS 260511 AND INSULATED PMF1 AS SPECIFIED IN 404211 MECHANICAL INSULATION.
6. TOTE HEAT BLANKET REQUIRED. ULINE MODEL H-8023 OR EQUAL

NO.	BY	CHK	APP'D
0	BLB	JSM	BLB

REVISIONS AND RECORD OF USE

ISSUED FOR CONSTRUCTION — 5/19/2020

REGISTERED PROFESSIONAL ENGINEER — BRIAN L. BUTLER — No. E 16569 — ELECTRICAL — STATE OF CALIFORNIA

BLACK & VEATCH JOINT VENTURE — BLACK & VEATCH — FILANC

CITY OF MORRO BAY
MORRO BAY WATER RECLAMATION FACILITY (WRF)

CHEMICALS - CHEMICAL FACILITY P&ID

SODIUM BISULFITE STORAGE & FEED

DESIGNED: BLB, DAV
DETAILED: PVR
CHECKED: JSM, BDS
APPROVED: BLB
DATE: 5/19/2020

0 1/2 1

IF THIS BAR DOES NOT MEASURE 1" THEN DRAWING IS NOT TO FULL SCALE

PROJECT NO. 400530

90-I-004

SHEET 145 OF 412

PLOTTED: 5/18/2020 5:44:21 PM

D400530

PCS HMI

90-CTRL-RIO-0001

WEIGHT WI 0001

WEIGHT WI 0002

SPEED FEEDBACK SI 0001

SPEED SETPT SC 0001

RUNNING YIR 0001

FAIL YA 0001

IN REMOTE YI 0001

RUN CMD UCR 0001

HI PRESSURE PAH 0001

LEAK DETECTED MAH 0001

EYEWASH FLOW FAH 0001

ANTISCALANT STORAGE TOTE

24V FROM PLC

WIT 0002

WE 0002

ANTISCALANT SECONDARY CONTAINMENT WITH INTEGRAL SCALE

Q

ANTI-V-0008

90-ANTI-LCP-0001

(INTEGRAL TO PUMP)

1"-PW-CPVC-02

120V

FROM POTABLE WATER SUPPLY

FSH 0001

90-ANTI-EMEW-0001

2"-ANTI-CPVC-02

1/2"-ANTI-PE-06

PLANT PIPING

YARD PIPING

CHH-N1 (NOTE 5)

UM 51-I-001

ANTISCALANT TO COMMON RO HEADER

1"-ANTI-PVC-02

PG 0002

ANTI-V-0006

ANTI-V-0007

ANTI-V-0005

PG 0001

PSH 0001

MSH 0001

1"-ANTI-CPVC-02

1/2"-ATS-CPVC-02

1"-ATS-CPVC-02

ANTI-V-0004

ANTI-V-0003

ANTI-V-0001

1"-ANTI-CPVC-02

ANTI-V-0002

ANTISCALANT METERING PUMP ANTI-P-0001

NOTE 4

NOTES:

1. SEE LEGEND AND ABBREVIATIONS ON DRAWING 00-I-001, 00-I-002 AND 00-I-003.
2. AREA CODE IS 90 UNLESS OTHERWISE NOTED. SYSTEM CODE IS ANTI UNLESS OTHERWISE NOTED.
3. LOCAL CONTROL DEVICES SUCH AS INDICATING LIGHTS AND SWITCHES, LOCATED ON MCC's OR AT DRIVEN EQUIPMENT, MAY NOT BE SHOWN ON THIS P&ID.
4. DETAILS OF FEEDER / BLENDER SKID TO BE CONFIRMED WITH SELECTED VENDOR EQUIPMENT.
5. LEAK DETECTION PROVIDED IN THIS CHEMICAL PULL BOX. IO IS SHOWN ON P&ID 90-I-001

NO.	BY	CHK	APP
0	BLB	JSM	BLB

REVISIONS AND RECORD OF USE

5/19/2020 ISSUED FOR CONSTRUCTION

DATE

REGISTERED PROFESSIONAL ENGINEER
BRIAN L. BUTTERS
No. E 16569
ELECTRICAL
STATE OF CALIFORNIA

BLACK & VEATCH JOINT VENTURE

BLACK & VEATCH

FILANC

CITY OF MORRO BAY
MORRO BAY WATER RECLAMATION FACILITY (WRF)

CHEMICALS - CHEMICAL FACILITY
P&ID
ANTISCALANT STORAGE & FEED

DESIGNED: BLB, DAV
DETAILED: PVR
CHECKED: JSM, BDS
APPROVED: BLB
DATE: 5/19/2020

0 1/2 1

IF THIS BAR DOES NOT MEASURE 1" THEN DRAWING IS NOT TO FULL SCALE

PROJECT NO. 400530

90-I-005

SHEET 146 OF 412

PLOTTED: 5/18/2020 5:44:21 PM

D400530

PCS HMI

90-CTRL-RIO-0001

WEIGHT WI 0001 | WEIGHT WI 0002 | SPEED FEEDBACK SI 0101 | SPEED SETPT SC 0101 | RUNNING YIR 0101 | FAIL YA 0101 | IN REMOTE YI 0101 | RUN CMD UCR 0101 | HI PRESSURE PAH 0101 | LEAK DETECTED MAH 0101 | SPEED FEEDBACK SI 0201 | SPEED SETPT SC 0201 | RUNNING YIR 0201 | FAIL YA 0201 | IN REMOTE YI 0201 | RUN CMD UCR 0201 | HI PRESSURE PAH 0201 | LEAK DETECTED MAH 0201 | EYEWASH FLOW FAH 0001

90-CA-LCP-0101
(INTEGRAL TO PUMP)

90-CA-LCP-0201
(INTEGRAL TO PUMP)

FROM POTABLE WATER SUPPLY
1"-PW-CPVC-02
120V
FSH 0001
90-CA-EMEW-0001

CITRIC ACID STORAGE TOTE
24V FROM PLC
WIT 0002
WE 0002
CITRIC ACID SECONDARY CONTAINMENT WITH INTEGRAL SCALE
CA-V-0002
2"-CA-PVC-02

CITRIC ACID STORAGE TOTE
24V FROM PLC
WIT 0001
WE 0001
CITRIC ACID SECONDARY CONTAINMENT WITH INTEGRAL SCALE
CA-V-0001
2"-CA-PVC-02
CA-V-0003

1"-CA-PVC-02
PG 0102
CA-V-0104
CA-V-0105
CA-V-0103
PG 0101
PSH 0101
MSH 0101
1/2"-CA-CPVC-02
1"-CA-PVC-02
CA-V-0102
CA-V-0101
2"-CA-PVC-02

1"-CA-PVC-02
PG 0202
CA-V-0204
CA-V-0205
CA-V-0203
PG 0201
PSH 0201
MSH 0201
1/2"-CA-CPVC-02
1"-CA-PVC-02
CA-V-0202
CA-V-0201
2"-CA-PVC-02

2"-CA-CPVC-02
1/2"-CA-PE-06
PLANT PIPING
YARD PIPING
CHH-N1 (NOTE 5)
UN 51-I-009
TO RO CIP / NEUTRALIZATION TANK

2"-CA-CPVC-02
3/4"-CA-PE-06
PLANT PIPING
YARD PIPING
CHH-N1 (NOTE 5)
CHH-N2
CHH-N3
CHH-N4
CHH-N5
UO 32-I-001
TO MBR BACKWASH / CIP

NOTE 4

NOTES:

1. SEE LEGEND AND ABBREVIATIONS ON DRAWING 00-I-001, 00-I-002 AND 00-I-003.
2. AREA CODE IS 90 UNLESS OTHERWISE NOTED. SYSTEM CODE IS CA UNLESS OTHERWISE NOTED.
3. LOCAL CONTROL DEVICES SUCH AS INDICATING LIGHTS AND SWITCHES, LOCATED ON MCC's OR AT DRIVEN EQUIPMENT, MAY NOT BE SHOWN ON THIS P&ID.
4. DETAILS OF FEEDER / BLENDER SKID TO BE CONFIRMED WITH SELECTED VENDOR EQUIPMENT.
5. LEAK DETECTION PROVIDED IN THIS CHEMICAL PULL BOX. IO IS SHOWN ON P&ID 90-I-001.

NO.	BY	CHK	APP
0	BLB	JSM	BLB

REVISIONS AND RECORD OF USE

5/19/2020 ISSUED FOR CONSTRUCTION

DATE

REGISTERED PROFESSIONAL ENGINEER
BRIAN L. BUTLER
No. E 16569
ELECTRICAL
STATE OF CALIFORNIA

BLACK & VEATCH
JOINT VENTURE
BLACK & VEATCH
FILANC

CITY OF MORRO BAY
MORRO BAY WATER
RECLAMATION FACILITY (WRF)

CHEMICALS - CHEMICAL FACILITY
P&ID
CITRIC ACID STORAGE & FEED

DESIGNED: BLB, DAV
DETAILED: PVR
CHECKED: JSM, BDS
APPROVED: BLB
DATE: 5/19/2020

0 1/2 1
IF THIS BAR DOES NOT MEASURE 1" THEN DRAWING IS NOT TO FULL SCALE

PROJECT NO.
400530

90-I-006
SHEET
147 OF 412

PLOTTED: 5/18/2020 5:44:22 PM
D400530

TYPICAL I/O FOR ON-OFF VALVE NPW-V-0002, NPW-V-0003, NPW-V-0004

PCS HMI

WEIGHT	WEIGHT	OPENED	CLOSED	IN REMOTE	OPEN CMD	CLOSE CMD	TEMP	COND	TEMP	COND	HI PRESSURE	LEAK DETECTED	FAIL	IN REMOTE	RUNNING	RUN CMD	STOP CMD	STROKE LENGTH	STROKE CMD	SPEED FEEDBACK	SPEED SETPT
WI 0001	WI 0002	ZIO 0001	ZIC 0001	YI 0001	ZCO 0001	ZCC 0001	TI 0201	AI 0201	TI 0101	AI 0101	PAH 0101	MAH 0101	YA 0101	YI 0101	YIR 0101	UCR 0101	UCS 0101	NI 0101	NC 0101	SI 0101	SC 0101

HI PRESSURE	LEAK DETECTED	FAIL	IN REMOTE	RUNNING	RUN CMD	STOP CMD	STROKE LENGTH	STROKE CMD	SPEED FEEDBACK	SPEED SETPT	EYEWASH FLOW
PAH 0201	MAH 0201	YA 0201	YI 0201	YIR 0201	UCR 0201	UCS 0201	NI 0201	NC 0201	SI 0201	SC 0201	FAH 0001

90-CTRL-RIO-0001

SEE TYPICAL I/O AND CONTROLS

VALVE ACTUATOR: HS 0001, LOR, HS 0001, OSC, ZLC 0001, ZLO 0001, ZSC 0001, ZSO 0001

FROM PLAN WATER SUPPLY AFTER NPW BACKFLOW PREVENTER

1 1/2"-NPW-PVC-02

FI 0101, FI 0201

TIT 0101, AIT 0101 COND, TE 0101, AE 0101 COND

NPW-V-0001

NPW-V-0003

1 1/2"-SA-CRP-01

TIT 0201, AIT 0201 COND, TE 0201, AE 0201 COND

HSO4-V-0101

HSO4-V-0201

NPW-V-0002

NPW-V-0004

1 1/2"-SA-CRP-02

HSO4-V-0208, HSO4-V-0207

HSO4-V-0108, HSO4-V-0107

SULFURIC ACID DILUTION PANEL 90-HSO4-PNL-0001

1 1/2"-SA-CRP-01

Q HSO4-V-0002

SULFURIC ACID STORAGE TOTE

WIT 0002 — 24V FROM PLC

WE 0002

SULFURIC ACID SECONDARY CONTAINMENT WITH INTEGRAL SCALE

Q HSO4-V-0001

SULFURIC ACID STORAGE TOTE

24V FROM PLC — WIT 0001

WE 0001

SULFURIC ACID SECONDARY CONTAINMENT WITH INTEGRAL SCALE

OOR / RUN: HS, SIC, YL, YA, MAH, PAH, I

90-HSO4-LCP-0101 (INTEGRAL TO PUMP)

90-HSO4-LCP-0201 (INTEGRAL TO PUMP)

PSH 0101, PG 0101, PG 0102, 1"-SA-CRP-01, HSO4-V-0106

NHS-V-0105, HSO4-V-0104, HSO 4 P-0101, MSH 0101, HSO4-V-0103, HSO4-V-0102, HSO4-V-0101

PSH 0201, PG 0201, PG 0202, 1"-SA-CRP-01, HSO4-V-0206

NHS-V-0205, HSO4-V-0204, HSO 4 P-0201, MSH 0201, HSO4-V-0203, HSO4-V-0202, HSO4-V-0201

1"-SA-CRP-01

HSO4-V-0003

NOTE 5

1"-PW-CPVC-02 — FROM POTABLE WATER SUPPLY

120V

FSH 0001

90-HSO4-EMEW-0001

PLANT PIPING / YARD PIPING 2"-SA-CPVC-02 — 1"-SA-CS-12 — 1/2"-SA-TEFL-01 — CHH-N1 (NOTE 6) — UP 51-I-001 TO RO FEED TANK OUTLET PIPING

NOTE 4

PLANT PIPING / YARD PIPING 2"-SA-CPVC-02 — 1"-SA-CS-12 — 1/2"-SA-TEFL-01 — CHH-N1 (NOTE 6) — UQ 52-I-001 TO UV / AOP SYSTEM

NOTE 4

NOTES:

1. SEE LEGEND AND ABBREVIATIONS ON DRAWINGS 00-I-001, 00-I-002 AND 00-I-003.
2. AREA CODE IS 90 UNLESS OTHERWISE NOTED. SYSTEM CODE IS HSO4 UNLESS OTHERWISE NOTED.
3. LOCAL CONTROL DEVICES SUCH AS INDICATING LIGHTS AND SWITCHES, LOCATED ON MCC's OR AT DRIVEN EQUIPMENT, MAY NOT BE SHOWN ON THIS P&ID.
4. PIPING DOWNSTREAM OF DILUTION PANEL TO BE TEFLON LINED STEEL MINIMUM LENGTH 15 FT DUE TO HEAT GENERATION DURING DILUTION PROCESS.
5. DETAILS OF FEEDER / BLENDER SKID TO BE CONFIRMED WITH SELECTED VENDOR EQUIPMENT.
6. LEAK DETECTION PROVIDED IN THIS CHEMICAL PULL BOX. IO IS SHOWN ON P&ID 90-I-001.

NO.	BY	CHK	APP
0	BLB	JSM	BLB

REVISIONS AND RECORD OF USE

5/19/2020 ISSUED FOR CONSTRUCTION

DATE

REGISTERED PROFESSIONAL ENGINEER — BRIAN L. BUTLER — No. E 16569 — ELECTRICAL — STATE OF CALIFORNIA

BLACK & VEATCH

JOINT VENTURE

FILANC — BLACK & VEATCH

CITY OF MORRO BAY
MORRO BAY WATER RECLAMATION FACILITY (WRF)

CHEMICALS - CHEMICAL FACILITY
P&ID
SULFURIC ACID STORAGE & FEED

DESIGNED:	BLB, DAV
DETAILED:	PVR
CHECKED:	JSM, BDS
APPROVED:	BLB
DATE:	5/19/2020

0 1/2 1

IF THIS BAR DOES NOT MEASURE 1" THEN DRAWING IS NOT TO FULL SCALE

PROJECT NO. 400530

90-I-007

SHEET 148 OF 412

PLOTTED: 5/18/2020 5:44:23 PM

D400530

PCS HMI

WEIGHT WI 0001

HIGH CURRENT IAH 0001

SPEED FEEDBACK SI 0001

SPEED SETPT SC 0001

RUNNING YIR 0001

FAIL YA 0001

IN REMOTE YI 0001

RUN CMD UCR 0001

LEAK DETECTED MAH 0001

*72-DWT-LCP-0001

72-CTRL-RIO-0001

EYEWASH FLOW FAH 0001

1"-PW-CPVC-02

120V

FROM POTABLE WATER SUPPLY

FSH 0001

90-POLF-EMEW-0001

90-POLF-LCP-0001
(INTEGRAL TO PUMP)

PG 0001

NPW-V-0002

FROM PLANT WATER SUPPLY AFTER NPW BACKFLOW PREVENTER

2"-NPW-PVC-02

NPW-V-0001

NPW-V-0003

ISH 0001

NOTE 5

120V

THICKENING POLYMER STORAGE TOTE

PSL 0001

NPW-V-0005

NPW-V-0004

NPW-V-0006

FI 0001

POLF-V-0006

1"-POLF-PVC-02

3"-POLF-PVC-02

UR 72-I-002

POLYMER TO BELT FILTER PRESS NO. 1

MIXING CHAMBER-

PG 0001

POLF-V-0005

MSH 0001

POLF-V-0003

POLF-V-0004

POLYMER FEEDER / BLENDER SYSTEM PERISTALTIC PUMP POLF-P-0001

POLF-V-0002

1"-POLF-PVC-02

POLF-V-0001

POLF-V-0002

NOTE 4

24V FROM PLC

WIT 0001

WE 0001

POLYMER SECONDARY CONTAINMENT WITH INTEGRAL SCALE

NOTES:

1. SEE LEGEND AND ABBREVIATIONS ON DRAWING 00-I-001, 00-I-002 AND 00-I-003.
2. AREA CODE IS 90 UNLESS OTHERWISE NOTED. SYSTEM CODE IS POLF UNLESS OTHERWISE NOTED.
3. LOCAL CONTROL DEVICES SUCH AS INDICATING LIGHTS AND SWITCHES, LOCATED IN MCC's OR AT DRIVEN EQUIPMENT MAY NOT INDICATED ON THIS P&ID.
4. DETAILS OF FEEDER / BLENDER SKID TO BE CONFIRMED WITH SELECTED VENDOR EQUIPMENT.
5. MIXER TO BE POWERED FROM LOCAL WALL RECEPTICLE, REFER TO POLYMER SYSTEM SPECIFICATION FOR ADDITIONAL INFORMATION.

NO.	BY	CHK	APP'D
0	BLB	JSM	BLB

REVISIONS AND RECORD OF USE

ISSUED FOR CONSTRUCTION

DATE 5/19/2020

REGISTERED PROFESSIONAL ENGINEER
BRIAN L. BUTLER
No. E 16569
ELECTRICAL
STATE OF CALIFORNIA

BLACK & VEATCH

JOINT VENTURE

FILANC

BLACK & VEATCH

CITY OF MORRO BAY
MORRO BAY WATER
RECLAMATION FACILITY (WRF)

CHEMICALS - DEWATERING AREA
P&ID
THICKENING POLYMER STORAGE & FEED

DESIGNED: BLB, DAV
DETAILED: PVR
CHECKED: JSM, BDS
APPROVED: BLB
DATE: 5/19/2020

0 1/2 1
IF THIS BAR DOES NOT MEASURE 1" THEN DRAWING IS NOT TO FULL SCALE

PROJECT NO. 400530

90-I-008

SHEET 149 OF 412

PLOTTED: 5/18/2020 5:44:24 PM

D400530

PCS HMI

90-CTRL-RIO-0001

WEIGHT WI 0001

WEIGHT WI 0002

SPEED FEEDBACK SI 0001

SPEED SETPT SC 0001

RUNNING YIR 0001

FAIL YA 0001

IN REMOTE YI 0001

RUN CMD UCR 0001

HI PRESSURE PAH 0001

LEAK DETECTED MAH 0001

EYEWASH FLOW FAH 0001

90-LAS-LCP-0001
(INTEGRAL TO PUMP)

120V

1"-PW-CPVC-02

FROM POTABLE WATER SUPPLY

FSH 0001

90-LAS-EMEW-0001

LIQUID AMMONIUM SULFATE STORAGE TOTE

24V FROM PLC

WIT 0002

WE 0002

LIQUID AMMONIUM SULFATE SECONDARY CONTAINMENT WITH INTEGRAL SCALE

1"-LAS-PVC-02

LAS-V-0002

2"-LAS-CPVC-02

1/2"-LAS-PE-06

PLANT PIPING

YARD PIPING

CHH-N1 (NOTE 5)

CHH-N2

CHH-N3

CHH-N4

US 33-I-001

LIQUID AMMONIUM SULFATE TO RO FEED

1"-LAS-PVC-02

PG 0002

LAS-V-0007

LAS-V-0008

LAS-V-0006

PG 0001

PSH 0001

MSH 0001

1/2"-LAS-PVC-02

1"-LAS-PVC-02

LAS-V-0005

LAS-V-0004

LAS-V-0001

1"-LAS-PVC-02

LAS-V-0003

LIQUID AMMONIUM SULFATE METERING PUMP LAS-P-0001

NOTE 4

LIQUID AMMONIUM SULFATE STORAGE TOTE

24V FROM PLC

WIT 0001

WE 0001

LIQUID AMMONIUM SULFATE SECONDARY CONTAINMENT WITH INTEGRAL SCALE

NOTES:

1. SEE LEGEND AND ABBREVIATIONS ON DRAWING 00-I-001, 00-I-002 AND 00-I-003.
2. AREA CODE IS 90 UNLESS OTHERWISE NOTED. SYSTEM CODE IS LAS UNLESS OTHERWISE NOTED.
3. LOCAL CONTROL DEVICES SUCH AS INDICATING LIGHTS AND SWITCHES, LOCATED ON MCC's OR AT DRIVEN EQUIPMENT, MAY NOT BE SHOWN ON THIS P&ID.
4. DETAILS OF FEEDER / BLENDER SKID TO BE CONFIRMED WITH SELECTED VENDOR EQUIPMENT.
5. LEAK DETECTION PROVIDED IN THIS CHEMICAL PULL BOX. IO IS SHOWN ON P&ID 90-I-001.

NO.	BY	CHK	APP
0	BLB	JSM	BLB

REVISIONS AND RECORD OF USE

ISSUED FOR CONSTRUCTION 5/19/2020

REGISTERED PROFESSIONAL ENGINEER BRIAN L. BUTLER No. E 16569 ELECTRICAL STATE OF CALIFORNIA

BLACK & VEATCH JOINT VENTURE BLACK & VEATCH FILANC

CITY OF MORRO BAY
MORRO BAY WATER RECLAMATION FACILITY (WRF)

CHEMICALS - CHEMICAL FACILITY
P&ID
LIQUID AMMONIUM SULFATE

DESIGNED: BLB, DAV
DETAILED: VSD
CHECKED: JSM, BDS
APPROVED: BLB
DATE: 5/19/2020

0 1/2 1
IF THIS BAR DOES NOT MEASURE 1" THEN DRAWING IS NOT TO FULL SCALE

PROJECT NO. 400530

90-I-009

SHEET 150 OF 412

PLOTTED: 5/19/2020 2:38:38 PM

D400530

PCS HMI

51-CTRL-RIO-0001

PUMP 1 OR 2 RUNNING YIR 0001

SBPS FAIL UA 1001

SBPS HI LEVEL LAH 1001

PCS HMI

51-CTRL-RIO-0001

PUMP 1 OR 2 RUNNING YIR 0001

SBPS FAIL UA 1001

SBPS HI LEVEL LAH 1001

95-ELEC-FP-0001

LOCATED IN OPERATIONS BUILDING

95-PW-YS-0001

YS 0001

FROM CITY POTABLE WATER SYSTEM

TO PLANT POTABLE WATER SYSTEM

95-PW-BFP - 0001

480V

SANITARY PUMPING SYSTEM LCP 95-SAN-LCP-0001

I

* HS 0101

2"-STW-PVC

STW-V-0005

*

PACKAGE PUMP STATION

STW-P-0101

STORM BASIN OUTLET CONTROL AND PUMP STATION

FROM PLANT SEWER

8"-SAN-PVC

* LSHH 0001

LSH 0001

* LSM 0001

LSL 0001

* TSH 0101

* MSH 0101

4"-SAN-DIP

* TSH 0201

* MSH 0201

4"-SAN-DIP

SAN-V-0013

SAN-V-0015

A/G DIP

B/G HDPE

SAN-V-0001

SAN-V-0007

6"-SAN-DIP

6"-SAN-HDPE

ZY 21-I-001

TO HEADWORKS 18" WWR

SAN-V-0003

4"-SAN-DIP

SAN-V-0009

SAN-V-0014

SAN-V-0016

SAN-V-0002

SAN-V-0008

6"-SAN-DIP

6"-SAN-HDPE

ZZ 21-I-001

TO HEADWORKS 14" WWR

SAN-V-0006

SAN-V-0010

FROM OPERATION BUILDING

8"-SAN-PVC

FROM DECHLORINATION STATION

4"-SAN-PVC

* SAN-P-0101

* SAN-P-0201

PACKAGE PUMP STATION*

SANITARY LIFT STATION

NOTES:

1. SEE LEGEND AND ABBREVIATIONS ON DRAWINGS 00-I-001, 00-1-002 AND 00-1-003.
2. AREA CODE IS 95 UNLESS OTHERWISE NOTED. SYSTEM CODE IS SAN FOR SANITARY LIFT PUMP STATION AND STW FOR STORM BASIN OUTLET PUMP STATION.

* ITEM TO BE PROVIDED BY SANITARY LIFT STATION SYSTEM SUPPLIER.

NO.	BY	CHK	APP
0	BLB	JSM	BLB

REVISIONS AND RECORD OF USE

5/19/2020 ISSUED FOR CONSTRUCTION

DATE

REGISTERED PROFESSIONAL ENGINEER
BRIAN L. BUTLER
No. E 16569
ELECTRICAL
STATE OF CALIFORNIA

BLACK & VEATCH

JOINT VENTURE

BLACK & VEATCH

FILANC

CITY OF MORRO BAY
FILANC BLACK & VEATCH DB PROPOSAL
RECLAMATION FACILTY (WRF)

P&ID
SANITARY PUMPING SYSTEM

DESIGNED: BLB,KEZ
DETAILED: PVR
CHECKED: JSM, BDS
APPROVED: BLB
DATE: 5/19/2020

0 1/2 1
IF THIS BAR DOES NOT MEASURE 1" THEN DRAWING IS NOT TO FULL SCALE

PROJECT NO. 400530

95-I-001

SHEET 151 OF 412

PLOTTED: 5/18/2020 3:41:05 PM

D400530

STRUCTURAL LEGENDS & ABBREVIATIONS

ABBREVIATIONS

A

ADDL	ADDITIONAL
AFF	ABOVE FINISH FLOOR
AHR	ANCHOR
AHU	AIR HANDLING UNIT
ALT	ALTERNATE
ALUM	ALUMINUM
APPROX	APPROXIMATE
AROD	ANCHOR ROD
ARCH	ARCHITECTURAL
ASSY	ASSEMBLY
AWG	AMERICAN WIRE GAUGE

B

BLDG	BUILDING
BM	BENCHMARK, BEAM
BO	BOTTOM OF
BOT	BOTTOM
BRDG	BRIDGING
BRG	BEARING
BTWN	BETWEEN

C

C	CAMBER
CANTIL	CANTILEVER
CHKD	CHECKERED
CHKDPL	CHECKERED PLATE
CIP	CAST-IN-PLACE
CJ	CONTRACTION JOINT
CJP	COMPLETE JOINT PENETRATION
CL	CENTERLINE
CLR	CLEAR
CMU	CONCRETE MASONRY UNIT
COL	COLUMN
CONC	CONCRETE
CONN	CONNECTION
CONSTR	CONSTRUCTION
CONT	CONTINUOUS, CONTINUATION, CONTROL
COORD	COORDINATE
COV	COVER
CRNR	CORNER
CSJ	CONSTRUCTION JOINT
CTRS	CENTERS

D

db	BAR DIAMETER
DBA	DEFORMED BAR ANCHOR
DET	DETAIL
DIA	DIAMETER
DIM	DIMENSION
DN	DOWN
DWA	DEFORMED WIRE ANCHOR
DWG	DRAWING
DWL	DOWEL

E

E	EAST
EA	EACH
EF	EACH FACE
EJ	EXPANSION JOINT
EL	ELEVATION
EMBED	EMBEDMENT
EMER	EMERGENCY
ENGR	ENGINEER
EOR	ENGINEER OF RECORD
EQ	EQUAL
EQUIP	EQUIPMENT
EQUIV	EQUIVALENT
EW	EACH WAY
EXIST	EXISTING
EXP	EXPANSION
EXT	EXTERIOR

F

FAB	FABRICATE
f'c	28 DAY CONCRETE STRENGTH =
FD	FLOOR DRAIN
FDN	FOUNDATION
FIN	FINISH(ED)
FLR	FLOOR
FS	FAR SIDE
FT	FOOT
FTG	FOOTING
FUT	FUTURE
FV	FIELD VERIFY
Fy	STRUCTURAL STEEL YIELD STRENGTH =
fy	REINFORCING STEEL YIELD STRENGTH =

G

GA	GAUGE
GALV	GALVANIZED
GEN	GENERAL
GR	GRADE

H

H	HORIZONTAL REACTION
HC	HOLLOW CORE
HEX	HEXAGONAL
HGR	HANGER
HORIZ	HORIZONTAL
HP	HIGH POINT
HSA	HEADED STUD ANCHOR
HSS	HOLLOW STRUCTURAL SECTION

I

ID	INSIDE DIAMETER
IF	INSIDE FACE
IN	INCHES
INT	INTERIOR, INTERNAL
INV	INVERT

J

JT	JOINT

K

K	KIPS (1000 LBS)
KSF	KIPS PER SQUARE FOOT
KSI	KIPS PER SQUARE INCH

L

LAB	LABORATORY
LB	POUND
LD	DEVELOPMENT LENGTH
LIN	LINES
LLBB	LONG LEG BACK TO BACK
LLH	LONG LEG HORIZONTAL
LLV	LONG LEG VERTICAL
LOC	LOCATION
LONG	LONGITUDINAL
LP	LOW POINT
LSLT	LONG SLOTTED HOLE TRANSVERSE
LSH	LONG SIDE HORIZONTAL
LSHP	LONG SLOTTED HOLE PARALLEL
LSV	LONG SIDE VERTICAL
LWC	LIGHTWEIGHT CONCRETE

M

M	MOMENT
MAS	MASONRY
MAX	MAXIMUM
MATL	MATERIAL
MC	MOMENT CONNECTION, MECHANICAL COUPLING
MECH	MECHANICAL
MEZZ	MEZZANINE
MFR	MANUFACTURE(R)
MIN	MINIMUM
MISC	MISCELLANEOUS
MTL	METAL

N

N	NORTH
N/A	NOT APPLICABLE
NIC	NOT IN CONTRACT
NO.	NUMBER
NOM	NOMINAL
NS	NEAR SIDE
NTS	NOT TO SCALE
NWC	NORMAL WEIGHT CONCRETE

O

OC	ON CENTER
OD	OUTSIDE DIAMETER
OF	OUTSIDE FACE
OPER	OPERATING
OPH	OPPOSITE HAND
OPNG	OPENING
OPP	OPPOSITE
OVS	OVERSIZED HOLE
OZ	OUNCE

P

P	AXIAL LOAD
PAF	POWDER ACTUATED FASTENER
PAR	PARALLEL
PCC	PRECAST CONCRETE
PCF	POUNDS PER CUBIC FOOT
PERP	PERPENDICULAR
PL	PLATE
PLCS	PLACES
PLF	POUNDS PER LINEAR FOOT
PJP	PARTIAL JOINT PENETRATION
PR	PAIR
PRELIM	PRELIMINARY
PROP	PROPERTY
PSF	POUNDS PER SQUARE FOOT
PSI	POUNDS PER SQUARE INCH
PT	POST TENSIONED

Q

QTY	QUANTITY

R

R	RADIUS
RCP	REINFORCED CONCRETE PIPE
RD	ROOD DRAIN
REF	REFERENCE
REINF	REINFORCEMENT
REQD	REQUIRED
REV	REVISION
RO	ROUGH OPENING

S

S	SOUTH
SC	SLIP CRITICAL, SHEAR CONNECTOR
SCHED	SCHEDULE
SDS	SELF DRILLING SCREW
SECT	SECTION
SH	SHEET
SIM	SIMILAR
SJ	SAW JOINT
SLBB	SHORT LEG BACK TO BACK
SOG	SLAB ON GRADE
SPA	SPACING
SPEC	SPECIFICATION
SPRT	SUPPORT
SQ	SQUARE
SSHP	SHORT SLOTTED HOLE PARALLEL
SSHT	SHORT SLOTTED HOLE TRANSVERSE
STD	STANDARD
STIF	STIFFENER
STIR	STIRRUP
STL	STEEL
STR	STRUCTURE, STRUCTURAL
SYM	SYMMETRICAL

T

T	TREAD, SCHEDULED PLATE THICKNESS
T&B	TOP & BOTTOM
TAN	TANGENT
TEMP	TEMPERATURE
THK	THICK, THICKNESS
THD	THREADED
TO	TOP OF
TOC	TOP OF CONCRETE
TOF	TOP OF FOOTING
TOM	TOP OF MASONRY
TOS	TOP OF STEEL, TOP OF SLAB
TOW	TOP OF WALL
TYP	TYPICAL

U

UNO	UNLESS NOTED OTHERWISE
USGS	UNITED STATES GEOLOGICAL SURVEY

V

VERT	VERTICAL
VNR	VENEER

W

W	WEST
W/	WITH
W/O	WITHOUT
WF	WIDE FLANGE
WP	WORK POINT
WS	WATERSTOP
WT	WEIGHT
WWR	WELDED WIRE REINFORCEMENT

X

x	BY, TIMES
XS	EXTRA STRONG
XXS	DOUBLE EXTRA STRONG

Y

	NOT USED

Z

ZD	ZONE DAMPER

SPECIAL CHARACTERS

@	AT
&	AND
ø	DIAMETER
#	NUMBER
%	PERCENT

WELD SYMBOL LEGEND

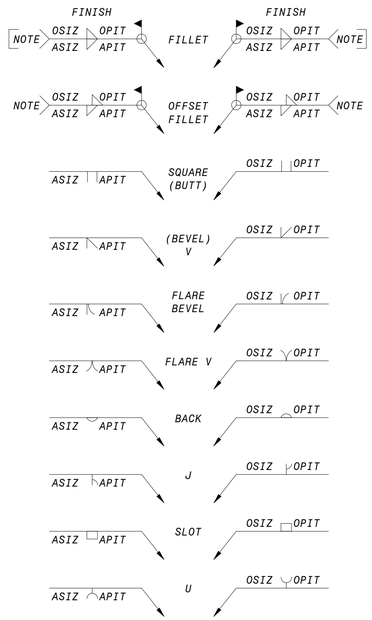

STRUCTURAL TAG LEGEND

W00x00	**COLUMN TAG** COLUMN TYPE
TYPE MARK	**STRUCTURAL FOUNDATION** (TYPE MARK)
X00x00	**STRUCTURAL FRAMING** FRAMING TYPE
00K00	**STRUCTURAL FRAMING** JOIST OR SLAB

DESIGN PARAMETERS

GENERAL PARAMETERS

BUILDING CODE	2016 CBC *
ROOF LOADS	
DEAD LOADS (DL)	VARIES (12 PSF MIN)
LIVE LOADS (LL)	20 PSF
FLOOR LOADS	
OPERATING	
DEAD LOADS (DL)	VARIES
LIVE LOADS (LL)	150 PSF
NON-OPERATING	
DEAD LOADS (DL)	VARIES
LIVE LOADS (LL)	150 PSF
CONTROL ROOM FLOORS	
DEAD LOADS (DL)	VARIES
LIVE LOADS (LL)	250 PSF
MISCELLANEOUS	
LARGE EQUIPMENT AREAS	
DEAD LOADS (DL)	VARIES
ADDITIONAL LIVE LOADS (LL)	50 PSF
WALKWAYS, PLATFORMS, STAIRS	
DEAD LOADS (DL)	VARIES
LIVE LOADS (LL)	100 PSF
STORAGE - GENERAL	
DEAD LOADS (DL)	VARIES
LIVE LOADS (LL)	250 PSF

SOILS VALUES (PER SOILS REPORT)

FOOTINGS	
BEARING PRESSURE-	
RECOMPACTED FILL (DL)	2000 PSF
BEARING PRESSURE-	
RECOMPACTED FILL (DL+LL)	3000 PSF
MAT FOUNDATIONS	
BEARING PRESSURE-	
RECOMPACTED FILL (DL+LL)	2000 PSF
BEARING PRESSURE-	
RECOMPACTED FILL	
(DL+LL+ISOLATED COLUMNS)	3000 PSF
LATERAL PASSIVE EFP	350 PCF
AT-REST EFP-	
(NATIVE SOIL/CRUSHED BEDROCK)	65 PCF
ACTIVE EFP-	
(NATIVE SOIL/CRUSHED BEDROCK)	50 PCF
FRICTION COEFFICIENT	0.40

WIND DESIGN BASIS

ULTIMATE WIND SPEED, V_{ULT}	115 MPH
NOMINAL WIND SPEED, V_{ASD}	89 MPH
RISK CATEGORY	III
EXPOSURE	C
IMPORTANCE FACTOR, I_w	1.00

SEISMIC DESIGN BASIS

SEISMIC DESIGN CATEGORY	D
SITE CLASS	C
SEISMIC FACTORS	
S_S / S_1	1.135 / 0.421
S_{DS} / S_{D1}	0.757 / 0.387
RISK CATEGORY	III
IMPORTANCE FACTOR, I_e	1.25

*THE 2016 CALIFORNIA BUILDING CODE (CBC), BASED ON THE 2015 INTERNATIONAL BUILDING CODE (IBC), IS THE GOVERNING CODE IN THE STATE OF CALIFORNIA.

NO.	BY	CHK	APP	DATE	REVISIONS AND RECORD OF USE
0				5/19/2020	ISSUED FOR CONSTRUCTION

REGISTERED PROFESSIONAL ENGINEER
CHARLES R. ASHLEY
S5258
STRUCTURAL
STATE OF CALIFORNIA

Ashley&Vance ENGINEERING, INC
JOINT VENTURE
BLACK&VEATCH
FILANC

CITY OF MORRO BAY
FILANC BLACK & VEATCH DB PROPOSAL
WATER RECLAMATION FACILITY (WRF)

GENERAL
STRUCTURAL
STRUCTURAL LEGENDS & ABBREVIATIONS

DESIGNED: M. MARSH
DETAILED: S. BENJAMIN
CHECKED: I. SHOEBRIDGE
APPROVED: C. ASHLEY
DATE: 5/19/2020

0 1/2 1
IF THIS BAR DOES NOT MEASURE 1" THEN DRAWING IS NOT TO FULL SCALE

PROJECT NO.
400530

00-S-001
SHEET
152 OF 412

PLOTTED: 5/19/2020 2:45:46 PM
D400530

STRUCTURAL GENERAL NOTES

GENERAL

1. THE FOLLOWING NOTES, DETAILS, SCHEDULES & SPECIFICATIONS SHALL APPLY TO ALL PHASES OF THIS PROJECT UNLESS SPECIFICALLY NOTED OTHERWISE. NOTES AND DETAILS ON THE STRUCTURAL PLANS SHALL TAKE PRECEDENCE OVER GENERAL NOTES AND TYPICAL DETAILS. WHERE NO DETAILS ARE GIVEN, CONSTRUCTION SHALL BE AS SHOWN FOR SIMILAR WORK.
2. ALL DRAWINGS ARE CONSIDERED TO BE PART OF THE CONTRACT DOCUMENTS. THE DESIGN-BUILDER SHALL BE RESPONSIBLE FOR THE REVIEW AND COORDINATION OF ALL DRAWINGS AND SPECIFICATIONS PRIOR TO THE START OF CONSTRUCTION. ANY DISCREPANCIES SHALL BE BROUGHT TO THE ATTENTION OF THE ENGINEER OF RECORD PRIOR TO THE START OF CONSTRUCTION SO THAT A CLARIFICATION CAN BE ISSUED. ANY WORK PERFORMED IN CONFLICT WITH THE CONTRACT DOCUMENTS OR ANY APPLICABLE CODE REQUIREMENTS SHALL BE CORRECTED BY THE DESIGN-BUILDER AT NO EXPENSE TO THE OWNER OR ENGINEER OF RECORD.
3. ALL INFORMATION ON EXISTING CONDITIONS SHOWN ON THE STRUCTURAL PLANS ARE BASED ON BEST PRESENT KNOWLEDGE AVAILABLE, BUT WITHOUT GUARANTEE OF ACCURACY. THE DESIGN-BUILDER SHALL BE RESPONSIBLE FOR THE VERIFICATIONS OF ALL DIMENSION AND CONDITIONS AT THE SITE. ANY DISCREPANCIES BETWEEN ACTUAL SITE CONDITIONS AND INFORMATION SHOWN ON THE DRAWINGS OR IN THE SPECIFICATIONS SHALL BE BROUGHT TO THE ATTENTION OF THE EOR PRIOR TO THE START OF CONSTRUCTION.
4. REFER TO THE ARCHITECTURAL PLANS FOR THE FOLLOWING:
    (A) SIZE AND LOCATION OF ALL BUILDING INTERIOR AND EXTERIOR WALL LOCATIONS.
    (B) SIZE AND LOCATION OF ALL BUILDING FLOOR, ROOF AND WALL OPENINGS
    (C) SPECIFICATION OF ALL BUILDING FINISHES & WATERPROOFING
    (D) ALL OTHER NON-STRUCTURAL ELEMENTS
5. REFER TO THE MECHANICAL, ELECTRICAL AND PLUMBING PLANS FOR THE FOLLOWING:
    (A) SIZE AND LOCATION OF ALL EQUIPMENT
    (B) PIPE RUNS, SLEEVES, HANGERS AND TRENCHES
    (C) ALL OTHER MECHANICAL, ELECTRICAL OR PLUMBING RELATED ELEMENTS
6. CONSTRUCTION MATERIALS SHALL BE UNIFORMLY SPREAD OUT IF PLACED ON FLOOR OR ROOF SO AS TO NOT OVERLOAD THE FRAMING. LOAD SHALL NOT EXCEED THE DESIGN LIVE LOAD PER SQUARE FOOT. IT IS THE DESIGN-BUILDER'S RESPONSIBILITY TO PROVIDE ADEQUATE SHORING AND/OR BRACING AS REQUIRED.
7. SPECIFICATIONS AND DETAILING OF ALL WATERPROOFING AND DRAINAGE ITEMS, WHILE SOMETIMES SHOWN ON THE STRUCTURAL PLANS FOR GENERAL INFORMATION PURPOSES ONLY, ARE SOLELY THE DESIGN RESPONSIBILITY OF OTHERS.
8. THE ENGINEER OF RECORD WILL NOT BE RESPONSIBLE FOR AND WILL NOT HAVE CONTROL OR CHARGE OF CONSTRUCTION MEANS, METHODS, TECHNIQUES, SEQUENCES OR PROCEDURES, OR FOR SAFETY PRECAUTIONS AND PROGRAMS IN CONNECTION WITH THE CONSTRUCTION DELINEATED BY THESE PLANS. IT SHOULD BE UNDERSTOOD THAT THE DESIGN-BUILDER OR HIS/HER AGENT(S) SHALL SUPERVISE AND DIRECT ALL WORK AND SHALL BE SOLELY AND COMPLETELY RESPONSIBLE FOR ALL CONSTRUCTION MEANS, METHODS, TECHNIQUES, SEQUENCES, PROCEDURES AND CONDITIONS ON THE JOB SITE, INCLUDING SAFETY OF ALL PERSONS AND PROPERTY DURING THE ENTIRE PERIOD OF CONSTRUCTION. PERIODIC OBSERVATIONS BY THE ENGINEER OF RECORD, HIS STAFF OR REPRESENTATIVES ARE NOT INTENDED TO INCLUDE VERIFICATION OF DIMENSIONS OR REVIEW THE ADEQUACY OF THE DESIGN-BUILDER'S SAFETY MEASURES ON OR NEAR THE CONSTRUCTION SITE.
9. MODIFICATIONS OF THE PLANS, NOTES, DETAILS AND SPECIFICATIONS SHALL NOT BE PERMITTED WITHOUT PRIOR APPROVAL FROM THE ENGINEER OF RECORD.
10. ALL WORKMANSHIP SHALL CONFORM TO THE BEST PRACTICE PREVAILING IN THE VARIOUS TRADES PERFORMING THE WORK. THE DESIGN-BUILDER SHALL BE RESPONSIBLE FOR COORDINATING THE WORK OF ALL TRADES.
11. IT IS THE DESIGN-BUILDER'S RESPONSIBILITY TO ENSURE THAT ONLY APPROVED STRUCTURAL PLANS ARE USED DURING THE COURSE OF CONSTRUCTION. THE USE OF UNAPPROVED DOCUMENTS SHALL BE AT THE DESIGN-BUILDER'S OWN RISK. CORRECTIONS OF ALL WORK BASED ON SUCH DOCUMENTS SHALL BE PERFORMED AT THE DESIGN-BUILDER'S EXPENSE.
12. THESE PLANS AND SPECIFICATIONS REPRESENT THE STRUCTURAL DESIGN ONLY. NO INFORMATION NOR WARRANTY IS PROVIDED FOR THE WORK OF ANY OTHER CONSULTANT (ARCHITECT, MECHANICAL, ELECTRICAL, ETC.). THIS INCLUDES, BUT IS NOT LIMITED TO, WATERPROOFING, DRAINAGE, VENTILATION, ACCESSIBILITY.

FOUNDATIONS

1. REFER TO STRUCTURAL DESIGN PARAMETERS SECTION ON SHEET 00-S-001 FOR ALL SOIL DESIGN VALUES USED IN CALCULATIONS.
2. SOILS VALUES PER GEOLOGIC/GEOTECHNICAL REPORT (OR "SOILS REPORT") BY EARTH SYSTEMS PACIFIC, FILE NO. 301964-002, DATED JULY 1, 2019. THIS REPORT AND ALL RECOMMENDATIONS CONTAINED THEREIN ARE TO BE CONSIDERED A PART OF THESE PLANS.
3. IT IS THE DESIGN-BUILDER'S RESPONSIBILITY TO OBTAIN A COPY OF THE SOILS REPORT FROM THE OWNER. A COPY OF THE SOILS REPORT SHALL BE ON THE JOB SITE DURING THE COURSE OF CONSTRUCTION.
4. UNEXPECTED SOIL CONDITIONS: ALLOWABLE VALUES AND SUBSEQUENT FOUNDATION DESIGNS ARE BASED ON SOIL CONDITIONS WHICH ARE SHOWN BY TEST BORINGS. ACTUAL SOIL CONDITIONS WHICH DEVIATE APPRECIABLY FROM THAT SHOWN IN THE TEST BORINGS SHALL BE REPORTED TO THE ENGINEER OF RECORD IMMEDIATELY.
5. ALL COMPACTION, FILL, BACKFILLING AND SITE PREPARATION SHALL BE PERFORMED IN ACCORDANCE WITH PROJECT SOILS REPORT OR THE GOVERNING BUILDING CODE CHAPTER 18 & APPENDIX J. ALL SUCH WORK SHALL BE PERFORMED PER THE RECOMMENDATIONS OF THE PROJECT SOILS ENGINEER OF RECORD.
6. EXCAVATE TO REQUIRED DEPTHS AND DIMENSIONS (AS INDICATED IN THE DRAWINGS), CUT SQUARE AND SMOOTH WITH FIRM LEVEL BOTTOMS. CARE SHALL BE TAKEN NOT TO OVER-EXCAVATE FOUNDATION AT LOWER ELEVATION AND PREVENT DISTURBANCE OF SOILS AROUND HIGH ELEVATION.
7. FOUNDATIONS SHALL BE POURED IN NEAT EXCAVATIONS.
8. EXCAVATE ALL FOUNDATIONS TO REQUIRED DEPTHS INTO COMPACTED FILL OR NATURAL SOIL (AS PER PLANS AND DETAILS) AND AS VERIFIED BY THE BUILDING OFFICIAL AND/OR SOILS ENGINEER OF RECORD.
9. ALL FOUNDATIONS SHALL BE INSPECTED AND APPROVED BY THE APPROPRIATE INSPECTOR AND/OR A REPRESENTATIVE OF THE SOILS ENGINEER OF RECORD PRIOR TO FORMING AND PLACEMENT OF REINFORCING OR CONCRETE.
10. FOUNDATIONS SHALL NOT BE POURED UNTIL ALL REQUIRED REINFORCING STEEL, FRAMING HARDWARE, SLEEVES, INSERTS, CONDUITS, PIPES, ETC. AND FORMWORK IS PROPERLY PLACED AND INSPECTED BY THE APPROPRIATE INSPECTOR(S).
11. IT IS THE RESPONSIBILITY OF THE DESIGN-BUILDER IN CHARGE OF FRAMING TO PROPERLY POSITION ALL HOLDOWN BOLTS, ANCHOR BOLTS, COLUMN BASES, AND ALL OTHER CAST-IN-PLACE HARDWARE. REFER TO TYPICAL DETAILS. ALL HARDWARE TO BE SECURED PRIOR TO FOUNDATION INSPECTIONS.
12. THE SIDES AND BOTTOMS OF DRY EXCAVATIONS MUST BE MOISTENED JUST PRIOR TO PLACING CONCRETE. CONVERSELY, DE-WATER FOOTINGS AS REQUIRED TO REMOVE STANDING WATER AND TO MAINTAIN OPTIMUM WORKING CONDITIONS.
13. THE DESIGN-BUILDER SHALL BE SOLELY RESPONSIBLE FOR ALL EXCAVATION PROCEDURES INCLUDING LAGGING, SHORING, AND THE PROTECTION OF ADJACENT PROPERTY, STRUCTURES, STREETS, AND UTILITIES IN ACCORDANCE WITH ALL FEDERAL, STATE AND LOCAL SAFETY ORDINANCES. THE DESIGN-BUILDER SHALL PROVIDE FOR THE DESIGN AND INSTALLATION OF ALL CRIBBING, BRACING AND SHORING REQUIRED.

NO.	BY	CHK	APP	DATE	REVISIONS AND RECORD OF USE
0				5/19/2020	ISSUED FOR CONSTRUCTION

REGISTERED PROFESSIONAL ENGINEER
CHARLES R. ASHLEY
S5258
STRUCTURAL
STATE OF CALIFORNIA

Ashley&Vance ENGINEERING, INC
JOINT VENTURE
BLACK&VEATCH
FILANC

CITY OF MORRO BAY
FILANC BLACK & VEATCH DB PROPOSAL
WATER RECLAMATION FACILITY (WRF)

GENERAL
STRUCTURAL
GENERAL NOTES

DESIGNED: M. MARSH
DETAILED: S. BENJAMIN
CHECKED: I. SHOEBRIDGE
APPROVED: C. ASHLEY
DATE: 5/19/2020

0 1/2 1
IF THIS BAR DOES NOT MEASURE 1" THEN DRAWING IS NOT TO FULL SCALE

PROJECT NO.
400530

00-S-002
SHEET
153 OF 412

PLOTTED: 5/19/2020 2:45:46 PM
D400530

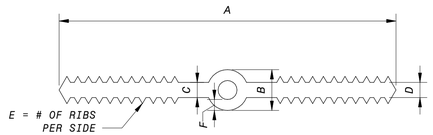

TYPE	A	B	C	D	E	F	APPLICATION
W/O CENTERBULB	6"	-	3/8"	3/8"	7	-	SEE NOTES 2 & 6
W/O CENTERBULB	9"	-	3/8"	3/8"	10	-	SEE NOTES 2 & 7
CENTERBULB	6"	7/8"	3/8"	3/8"	8	9/16"	SEE NOTES 4 & 6
CENTERBULB	9"	1"	3/8"	3/8"	8	1/4"	SEE NOTE 4
CENTERBULB	9"	1 1/2"	3/8"	1/4"	8	5/16"	SEE NOTE 5

NOTES:
1. SEE SPECIFICATIONS FOR MATERIAL REQUIREMENTS. NON-METALLIC WATERSTOPS ARE REQUIRED FOR CONCRETE JOINTS SUBJECTED TO CHLORINATED WATER, SEAWATER, AND WATERBORNE CHEMICALS.
2. FOR CONSTRUCTION JOINTS.
3. SEE SPLICE DETAIL (**1/00-S-101**).
4. FOR EXPANSION/CONTROL JOINTS 1" AND NARROWER.
5. FOR EXPANSION/CONTROL JOINTS WIDER THAN 1".
6. USE 6 INCH WATERSTOPS IN ALL JOINTS IN CONCRETE SECTIONS LESS THAN 12" IN THICKNESS UNLESS SPECIFICALLY SHOWN OTHERWISE.
7. USE 9 INCH WATERSTOPS IN ALL JOINTS IN CONCRETE SECTIONS GREATER THAN OR EQUAL TO 12" IN THICKNESS UNLESS SPECIFICALLY SHOWN OTHERWISE.
8. PVC WATERSTOP MUST MEET OR EXCEED THE PERFORMANCE REQUIRED IN SPECIFICATIONS, INCLUDING THE U.S. ARMY CORPS OF ENGINEERS CRD-C-572-74.
9. WATERSTOPS ARE TO BE PROPERLY POSITIONED PRIOR TO CONCRETE PLACEMENT AND MUST BE SECURELY POSITIONED IN THE FORMS BY TYING OFF THE OUTER EDGE OF THE WATERSTOP TO ADJACENT REINFORCING STEEL.

8 RIBBED PVC WATERSTOP SCHEDULE
NO SCALE

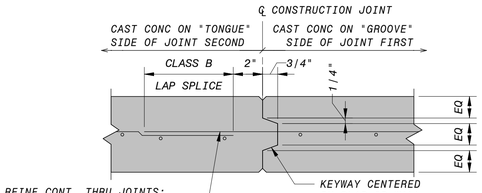

SINGLE LAYER REINF.

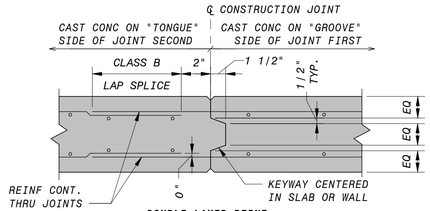

DOUBLE LAYER REINF.

NOTES:
1. COORDINATE LOCATIONS WITH EOR PRIOR TO PLACEMENT.
2. SANDBLAST OR WATER BLAST JOINT AND REINFORCEMENT PRIOR TO PLACING CONCRETE FOR NEXT SLAB OR WALL.
3. FOR WALLS, FORM ALL JOINTS WITH 1/4" CHAMFER.
4. FOR SLABS, EDGE TOP OF EXPOSED SLAB JOINT EDGES TO 1/4" RADIUS.

7 CONSTRUCTION JOINT AT WALL OR SLAB (NON-WATER BEARING ONLY)
NO SCALE

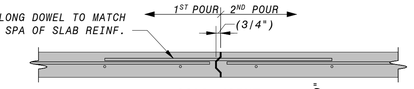

NOTES:
1. POUR SLAB IN ALT. BAYS, 12'-0" SQ. MAX.
2. SLAB MAY BE POURED MONOLITHICALLY IF SAW CUT @ 12'-0" MAX. EA. WAY
3. EXP. JOINTS PER PLAN.
4. DETAIL APPLIES TO NON-STRUCTURAL SLABS ONLY.

4 TYPICAL CONCRETE SLAB JOINTS
NO SCALE

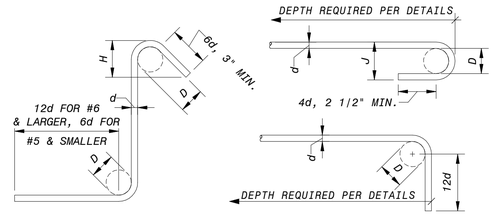

STANDARD TIES & STIRRUPS

BAR SIZE	D	H (APPROX.)
#3	1-1/2"	3"
#4	2"	3"
#5	2-1/2"	3-3/4"
#6	4-1/2"	4-1/2"
#7	5-1/4"	5-1/4"
#8	6"	6"

STANDARD END HOOKS

BAR SIZE	D	J
#3	2-1/4"	3"
#4	3"	4"
#5	3-3/4"	5"
#6	4-1/2"	6"
#7	5-1/4"	7"
#8	6"	8"
#9	9 1/2"	11 3/4"
#10	10 3/4"	1' 1 1/4"

NOTE:
ALL BAR BEND DIAMETERS & END LENGTHS MUST CONFORM TO THE CRSI MANUAL OF STANDARD PRACTICE

5 TYP. REINFORCEMENT BAR BENDS
NO SCALE

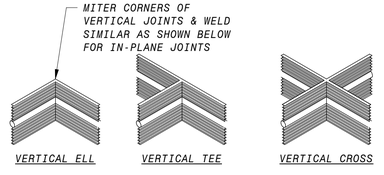

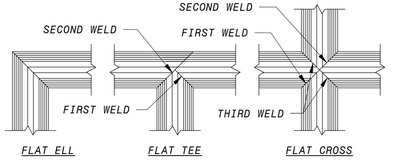

NOTES:
1. ALL WELDS SHALL BE PER WATERSTOP MANUFACTURER'S RECOMMENDATIONS.
2. ALL TRANSITIONS, INTERSECTIONS, AND SPLICES ARE TO BE HEAT WELDED TO MAINTAIN CONTINUITY. FACTORY-MADE FABRICATIONS ARE REQUIRED FOR ALL INTERSECTIONS AND CHANGES OF DIRECTION.
3. FIELD SPLICES ARE ONLY ACCEPTABLE IN STRAIGHT SECTIONS.

6 WATERSTOP JOINTS
NO SCALE

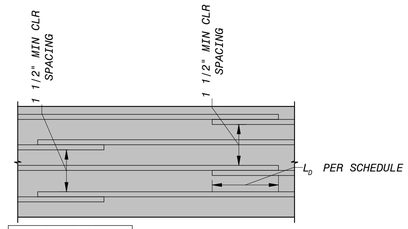

	BAR SIZE	CLASS B TENSION, L_D LAP SPLICE LENGTH	HOOKED, L_{DH}	
TYPICAL - f'c = 3 ksi	#3	28"	9"	VALUES ASSUME 60 KSI, NON-EPOXY REINFORCEMENT & 3 KSI NORMAL WEIGHT CONCRETE
	#4	37"	11"	
	#5	46"	14"	
	#6	56"	17"	
	#7	81"	20"	
	#8	93"	22"	
	#9	104"	25"	
	#10	116"	28"	
TYPICAL - f'c = 4 ksi	BAR SIZE	TENSION, L_D LAP SPLICE LENGTH	HOOKED, L_{DH}	
	#3	24"	8"	VALUES ASSUME 60 KSI, NON-EPOXY REINFORCEMENT & 4 KSI NORMAL WEIGHT CONCRETE
	#4	32"	10"	
	#5	40"	12"	
	#6	48"	15"	
	#7	70"	17"	
	#8	80"	19"	
	#9	90"	22"	
	#10	100"	24"	
TYPICAL - f'c = 4.5 ksi	BAR SIZE	TENSION, L_D LAP SPLICE LENGTH	HOOKED, L_{DH}	
	#3	23"	7"	VALUES ASSUME 60 KSI, NON-EPOXY REINFORCEMENT & 4.5 KSI NORMAL WEIGHT CONCRETE
	#4	30"	9"	
	#5	38"	12"	
	#6	45"	14"	
	#7	66"	16"	
	#8	76"	18"	
	#9	85"	21"	
	#10	94"	23"	

1 STD LAP SPLICES
NO SCALE

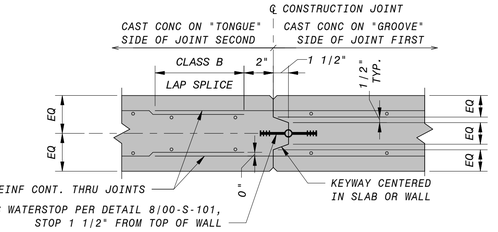

NOTES:
1. COORDINATE LOCATIONS WITH EOR PRIOR TO PLACEMENT.
2. SANDBLAST OR WATER BLAST JOINT AND REINFORCEMENT PRIOR TO PLACING CONCRETE FOR NEXT SLAB OR WALL.
3. FOR WALLS, FORM ALL JOINTS WITH 1/4" CHAMFER.
4. FOR SLABS, EDGE TOP OF EXPOSED SLAB JOINT EDGES TO 1/4" RADIUS.

2 CONSTRUCTION JOINT AT WALL OR SLAB (WATER BEARING)
NO SCALE

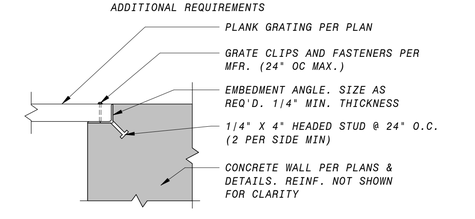

3 PLANK GRATING SEAT
NO SCALE

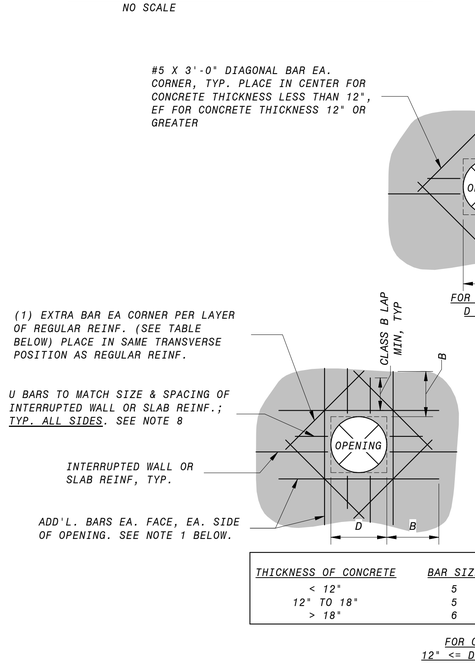

THICKNESS OF CONCRETE	BAR SIZE	BAR LENGTH RECTANGULAR OPNG	BAR LENGTH CIRCULAR OPNG
< 12"	5	3'-6"	D+24"
12" TO 18"	5	3'-6"	D+24"
> 18"	6	4'-0"	D+24"

FOR OPENINGS 12" <= D/H/W <= 54"

NOTES:
1. 50% OF INTERRUPTED WALL OR SLAB REINF. TO BE PLACED EA. SIDE OF OPENING. BARS TO BE SPACED AT 4" OC OR S/2, WHICHEVER IS LESS EA. FACE (S = BAR SPACING PER PLANS). LENGTH OF ADD'L. REINF. = H + W + (2X CLASS B LAP)
2. SEE PLAN AND SECTIONS FOR TYP. REINF., REINF. SPACING AND WALL OR SLAB THICKNESS.
3. ALL WALL AND/OR SLAB OPENINGS TO BE COORDINATED AND DETAILED ON REINF. SHOP DRAWINGS.
4. ADD'L. OPENINGS SHALL NOT BE PROVIDED W/O EOR APPROVAL.
5. THIS DETAIL SHALL APPLY AT ALL SIDES OF WALL OR SLAB OPENINGS AND/OR DISCONTINUITIES. APPLICABLE REINF. TO BE SHOWN ON SHOP DRAWINGS.
6. DO NOT CORE HOLES THROUGH STRUCTURAL WALLS OR SLABS WITHOUT PRIOR APPROVAL FROM EOR.
7. 2" CLEAR TO CONCRETE OPENINGS OR OUTSIDE FACE OF PIPES AND PIPE SLEEVES. DO NOT OVERCUT REINFORCEMENT FOR EASIER PLACEMENT OF WEEP RINGS AND FLANGES.
8. U BARS MAY BE REPLACED WITH STRAIGHT BARS AT CONCRETE WITH SINGLE MAT OF REINFORCEMENT.
9. B = CLASS B LAP SPLICE

9 TYP REINF AT WALL OR SLAB OPENINGS (<=54")
NO SCALE

NO.	BY	CHK	APP	DATE	REVISIONS AND RECORD OF USE
0				5/19/2020	ISSUED FOR CONSTRUCTION

REGISTERED PROFESSIONAL ENGINEER CHARLES R. ASHLEY S5258 STRUCTURAL STATE OF CALIFORNIA

Ashley&Vance ENGINEERING, INC

BLACK & VEATCH

JOINT VENTURE

FILANC

CITY OF MORRO BAY
FILANC BLACK & VEATCH DB PROPOSAL
WATER RECLAMATION FACILITY (WRF)

GENERAL
STRUCTURAL
STANDARD DETAILS

DESIGNED:	M. MARSH
DETAILED:	S. BENJAMIN
CHECKED:	I. SHOEBRIDGE
APPROVED:	C. ASHLEY
DATE:	5/19/2020

0 1/2 1
IF THIS BAR DOES NOT MEASURE 1" THEN DRAWING IS NOT TO FULL SCALE

PROJECT NO. 400530

00-S-101
SHEET 154 OF 412

PLOTTED: 5/19/2020 2:45:48 PM
D400530

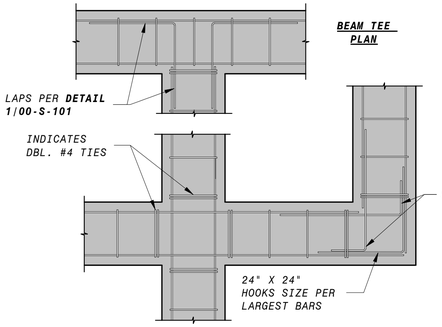

12 BEAM TO BEAM CONECTIONS
NO SCALE

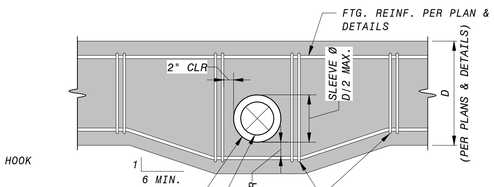

DO NOT LOCATE PENETRATIONS WITHIN 24" OF ANY HOLDOWNS OR ANCHOR BOLTS

ALL PENETRATIONS SHALL BE COORDINATED W/ EOR PRIOR TO CONCRETE POUR.

TIES:
SIZE, SHAPE AND SPACING PER PLAN & DETAILS. SEE BELOW IF NO TIES ARE INDICATED.
FTG. REINF. = (1) BAR T&B, USE #4 VERT. W/ 180° HOOK EA. END
FTG. REINF. > (1) BAR T&B, USE #4 STIRRUP W/ 135° HOOKS @ TOP

8 TYP. DUCT THROUGH FDN.
NO SCALE

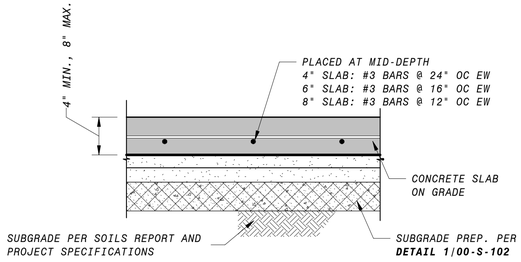

4 TYP CONCRETE STOOP
NO SCALE

REFER TO SOILS REPORT FOR ADDITIONAL REQUIREMENTS & RECOMMENDATIONS. ALL SPLICES IN MAT SLAB FOUNDATION TO BE CLASS B.

VAPOR RETARDER AND SAND LAYER REQUIRED FOR THE FOLLOWING AREAS: WATER COLLECTION SUPPLY AND STORAGE SHED [16], RO/UV BUILDING [50], ELECTRICAL BUILDING [80], CHEMICAL FACILITY [90], OPERATIONS BUILDING [95], AND MAINTENANCE BUILDING [96].

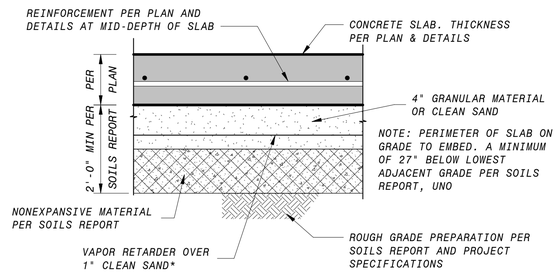

THE SOIL BENEATH SAND & VAPOR RETARDER SHALL BE PREMOISTENED TO A MINIMUM DEPTH AND % OF OPTIMUM MOISTURE CONTENT SPECIFIED BY THE SOIL ENGINEER OF RECORD, WHO SHALL TEST AND APPROVE PRIOR TO SLAB CONSTRUCTION.

*IF CLASS "A" VAPOR RETARDER IS USED, 1" PROTECTIVE SAND LAYER BELOW MAY BE OMITTED.

1 TYP. SLAB ON GRADE
NO SCALE

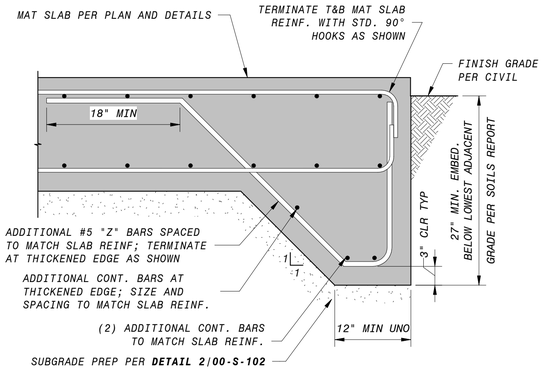

13 TYP THICKENED MAT SLAB EDGE
NO SCALE

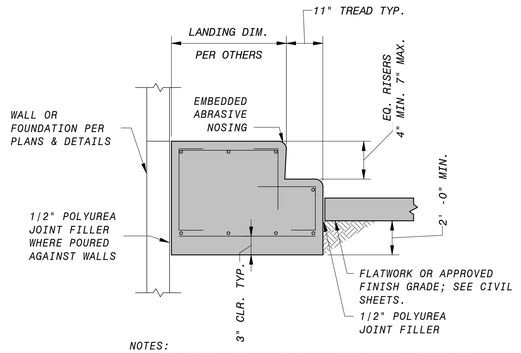

NOTES:
1. REINFORCE WITH #5 @12", UNLESS NOTED OTHERWISE
2. SUBGRADE PREP PER **DETAIL 1/00-S-102**.

9 CONCRETE STAIR - ON GRADE
NO SCALE

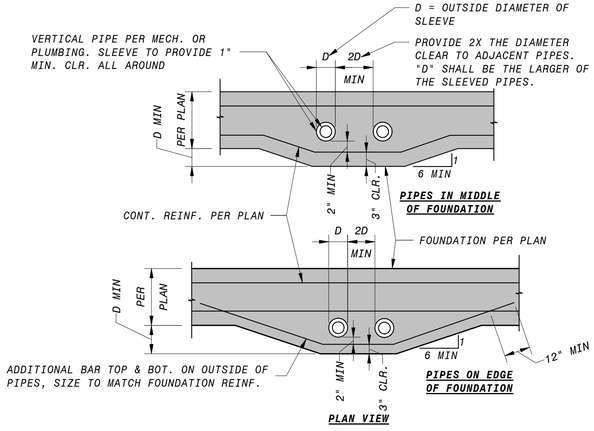

5 TYPICAL VERTICAL PIPES IN FDN.
NO SCALE

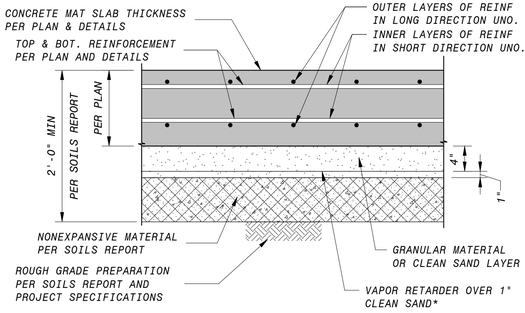

THE SOIL BENEATH SAND & VAPOR RETARDER SHALL BE PREMOISTENED TO A MINIMUM DEPTH AND % OF OPTIMUM MOISTURE CONTENT SPECIFIED BY THE SOIL ENGINEER OF RECORD, WHO SHALL TEST AND APPROVE PRIOR TO SLAB CONSTRUCTION.

*IF CLASS "A" VAPOR RETARDER IS USED, 1" PROTECTIVE SAND LAYER BELOW MAY BE OMITTED.

2 TYP. MAT SLAB ON GRADE
NO SCALE

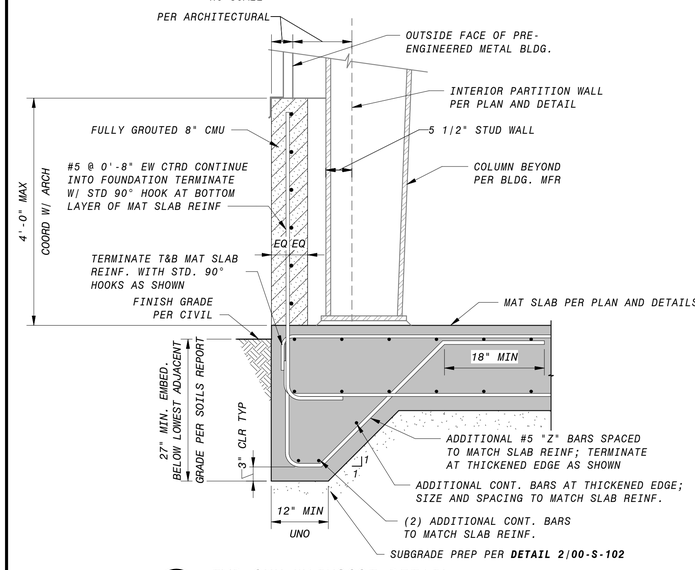

11 TYP CMU WAINSCOT DETAIL
NO SCALE

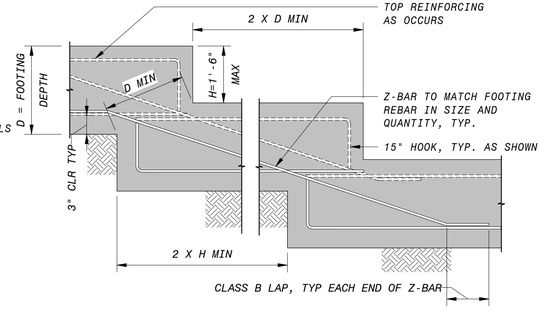

NOTE: NO FOUNDATION SHALL EXCEED A 1:10 SLOPE, STEP FOUNDATION AS REQ'D IN FIELD

10 TYPICAL STEPPED FOUNDATION
NO SCALE

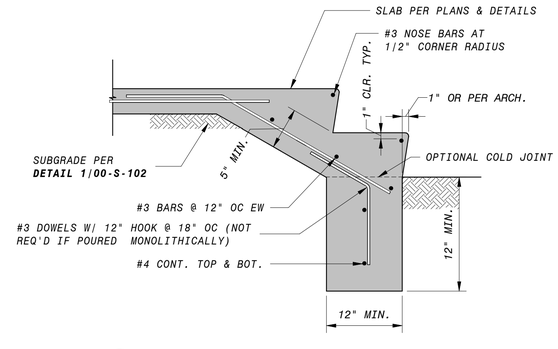

6 CONCRETE STAIR AT LANDING EDGE
NO SCALE

NO.	BY	CHK	APP	DATE	REVISIONS AND RECORD OF USE
0				5/19/2020	ISSUED FOR CONSTRUCTION

REGISTERED PROFESSIONAL ENGINEER CHARLES R. ASHLEY S5258 STRUCTURAL STATE OF CALIFORNIA

Ashley&Vance ENGINEERING, INC
JOINT VENTURE
BLACK&VEATCH
FILANC

CITY OF MORRO BAY
FILANC BLACK & VEATCH DB PROPOSAL
WATER RECLAMATION FACILITY (WRF)

GENERAL
STRUCTURAL
STANDARD DETAILS

DESIGNED:	M. MARSH
DETAILED:	S. BENJAMIN
CHECKED:	I. SHOEBRIDGE
APPROVED:	C. ASHLEY
DATE:	5/19/2020

0 1/2 1
IF THIS BAR DOES NOT MEASURE 1" THEN DRAWING IS NOT TO FULL SCALE

PROJECT NO. 400530

00-S-102
SHEET 155 OF 412

PLOTTED: 5/19/2020 2:45:49 PM
D400530

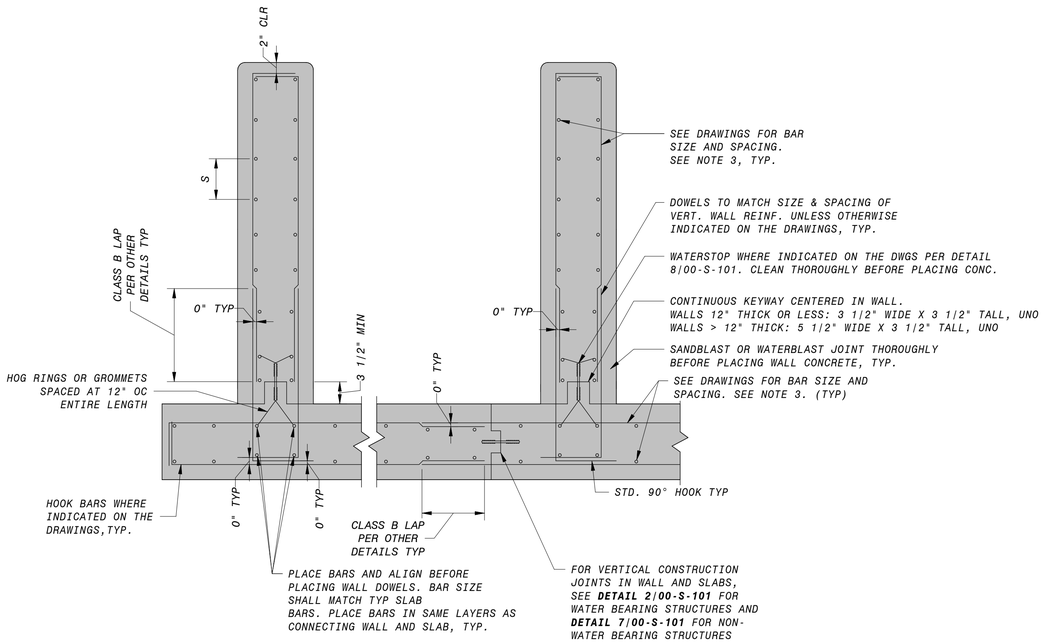

NOTES:
1. "S" = BAR SPACING INDICATED ON THE DRAWINGS.
2. HOOKS SHALL BE STD 90° HOOKS.
3. ORIENTATION OF BARS IN LAYERS SHALL BE AS INDICATED ON THE DRAWINGS.
4. SEE DETAIL 5/00-S-103 THIS SHEET FOR ALTERNATIVE TO FORMED KEYWAY.

2 WALL AND SLAB JOINTS WITH WATERSTOP
NO SCALE

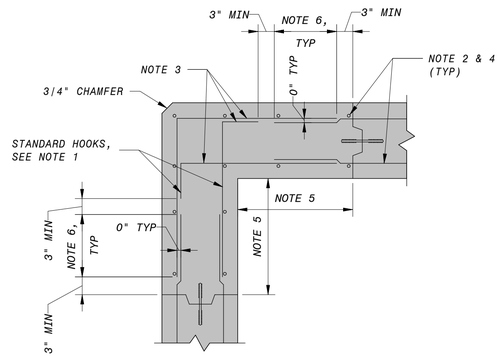

A - DETAIL - CORNER FOR DOUBLE MAT

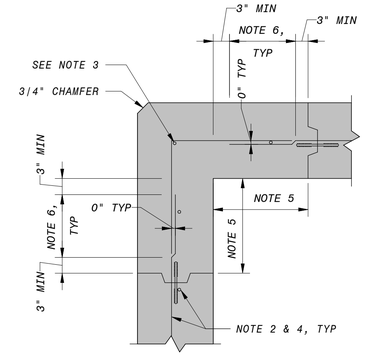

B - DETAIL - CORNER FOR SINGLE MAT

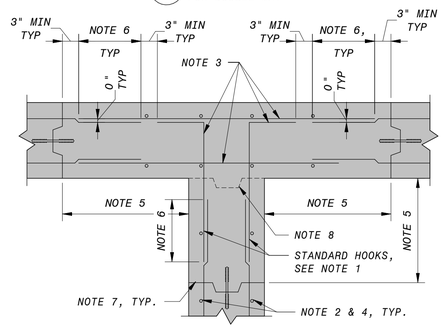

C - DETAIL - INTERSECTION FOR DOUBLE MAT

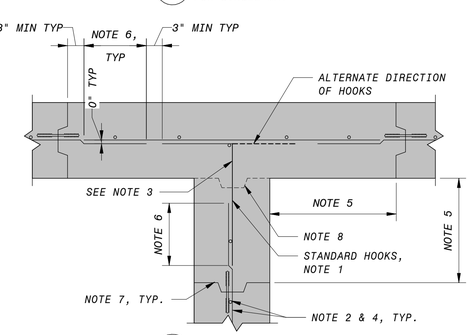

D - DETAIL - INTERSECTION FOR SINGLE MAT

NOTES:
1. HOOKS SHALL BE STANDARD 90° HOOKS.
2. ORIENTATION OF BAR LAYERS SHALL BE AS INDICATED ON THE DRAWINGS.
3. BAR SIZE SHALL MATCH LARGEST BARS IN CONNECTING WALL. PLACE BAR IN SAME LAYERS AS CONNECTING WALLS. (TYP)
4. SEE DRAWINGS FOR BAR SIZE AND SPACING.
5. DISTANCE FROM INSIDE CORNER FACE TO NEAREST VERTICAL CONSTRUCTION JOINT. DIMENSION AS DENOTED IN DETAIL WITH 6" MIN AND 30'-0" MAX FOR LIQUID CONTAINING STRUCTURES OR 40'-0" MAX IN OTHER STRUCTURES. AT "T" INTERSECTIONS WHERE A WATERSTOP IS NOT REQUIRED THIS DIMENSION MAY BE ZERO.
6. OPTIONAL SPLICE LOCATION UNO. CLASS B LAP SPLICE PER OTHER DETAILS, MIN.
7. VERTICAL CONSTRUCTION JOINT NEAREST WALL CORNER WITH WATERSTOP AS REQUIRED AT ALL LIQUID CONTAINING STRUCTURES.
8. ALTERNATE VERTICAL CONSTRUCTION JOINT AT "T" INTERSECTIONS WHERE WATERSTOP ARE NOT REQUIRED.

1 HORIZONTAL WALL REINFORCEMENT AT CORNERS AND INTERSECTIONS
NO SCALE

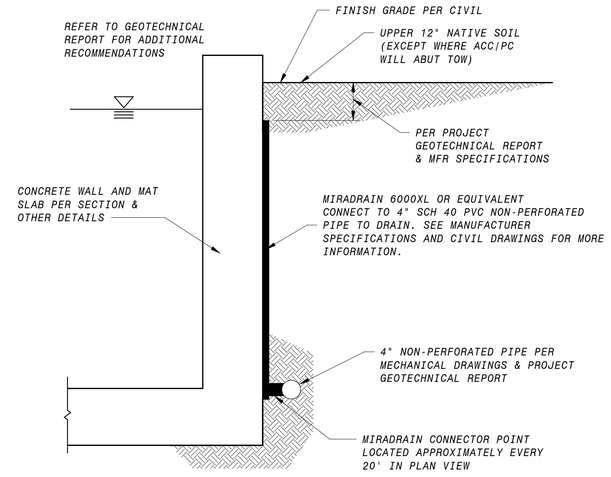

3 DRAINED CONDITIONS
NO SCALE

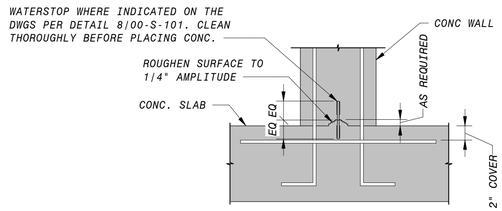

SLAB TO BOTTOM OF WALL

NOTES:
1. REINFORCING STEEL IS CONTINUOUS THROUGH ALL CONSTRUCTION JOINTS

5 TYPICAL CONSTRUCTION JOINTS
NO SCALE

NO.	BY	CHK	APP	DATE	REVISIONS AND RECORD OF USE
0				5/19/2020	ISSUED FOR CONSTRUCTION

REGISTERED PROFESSIONAL ENGINEER CHARLES R. ASHLEY S5258 STRUCTURAL STATE OF CALIFORNIA

Ashley&Vance ENGINEERING, INC | JOINT VENTURE | BLACK & VEATCH | FILANC

CITY OF MORRO BAY
FILANC BLACK & VEATCH DB PROPOSAL
WATER RECLAMATION FACILITY (WRF)

GENERAL
STRUCTURAL
STANDARD DETAILS

DESIGNED: M. MARSH
DETAILED: S. BENJAMIN
CHECKED: I. SHOEBRIDGE
APPROVED: C. ASHLEY
DATE: 5/19/2020

0 1/2 1
IF THIS BAR DOES NOT MEASURE 1" THEN DRAWING IS NOT TO FULL SCALE

PROJECT NO. 400530

00-S-103
SHEET 156 OF 412

PLOTTED: 5/19/2020 2:45:50 PM
D400530

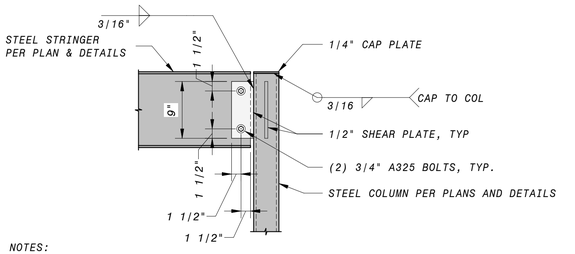

NOTES:
1. CORROSION PROTECTION REQUIRED AT DISSIMILAR METALS.
2. ALL STEEL ELEMENTS TO BE GALVANIZED, UNO.
3. REFER TO SPECIFICATIONS FOR FINISH REQUIREMENTS. ALL EXPOSED WELDS TO BE GROUND SMOOTH.
4. REPAIR ALL DAMAGED COATINGS.
5. INFORMATION SHOWN IS FOR REFERENCE ONLY. STAIR DESIGN SHALL BE PER THE STAIR SUPPLIER AND SPECIFICATION SECTION 05 50 13.

9 STEEL CHANNEL TO COLUMN

NO SCALE

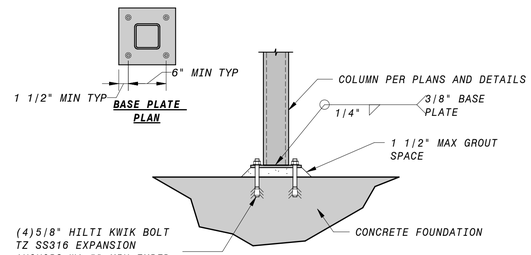

NOTES:
1. CORROSION PROTECTION REQUIRED AT DISSIMILAR METALS.
2. ALL STEEL ELEMENTS TO BE GALVANIZED, UNO.
3. REFER TO SPECIFICATIONS FOR FINISH REQUIREMENTS. ALL EXPOSED WELDS TO BE GROUND SMOOTH.
4. REPAIR ALL DAMAGED COATINGS.
5. TAKE CARE TO NOT HIT (E) REINFORCEMENT.

10 STEEL COLUMN TO MAT SLAB

NO SCALE

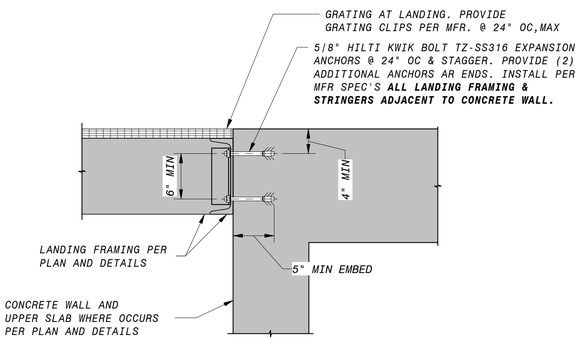

NOTES:
1. CORROSION PROTECTION REQUIRED AT DISSIMILAR METALS.
2. ALL STEEL ELEMENTS TO BE GALVANIZED, UNO.
3. REFER TO SPECIFICATIONS FOR FINISH REQUIREMENTS. ALL EXPOSED WELDS TO BE GROUND SMOOTH.
4. REPAIR ALL DAMAGED COATINGS.
5. TAKE CARE TO NOT HIT (E) REINFORCEMENT.

11 FRAMING TO CONCRETE WALL AT LANDING

NO SCALE

ALL RAILINGS TO BE SIDE MOUNT, UNO. SEE DETAIL 2/00-S-104 FOR TOP MOUNT ANCHORAGE.

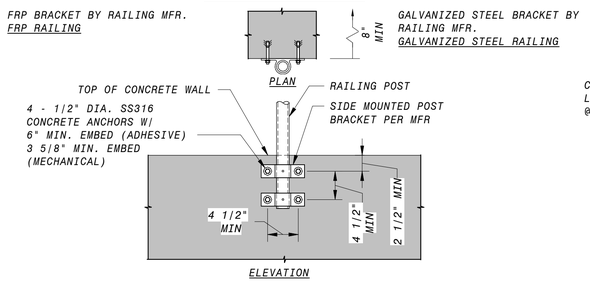

NOTES:
1. DO NOT CUT REINFORCING WITHOUT PRIOR CONSENT FROM EOR.
2. ANCHORAGE TO 4000 PSI MIN CONCRETE 2-1/2" MIN EDGE DISTANCE TO ANCHOR.
3. PROVIDE PROTECTION FOR DISSIMILAR METALS AND CONCRETE PER SPECIFICATION.
4. CONCRETE ANCHOR SIZE AND EMBEDMENTS CALCULATED FOR HILTI ADHESIVES, RE-500-V3, AND HILTI MECHANICAL ANCHORS KBTZ. IF ALTERNATIVE ANCHOR SYSTEM IS USED, SUBMIT STAMPED CALCULATIONS AND DRAWINGS.
5. CARE TO BE TAKEN NOT TO HIT (E) REINF.
6. USE SIDE MOUNTED POST BRACKET AS A TEMPLATE FOR THE ANCHOR BOLTS.

6 RAILING POST ANCHORAGE - CONCRETE SIDE MOUNT

NO SCALE

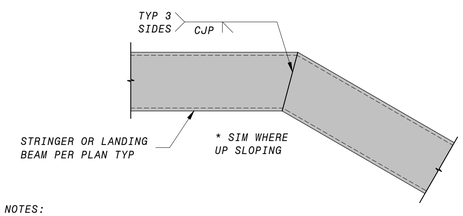

NOTES:
1. CORROSION PROTECTION REQUIRED AT DISSIMILAR METALS.
2. ALL STEEL ELEMENTS TO BE GALVANIZED, UNO.
3. REFER TO SPECIFICATIONS FOR FINISH REQUIREMENTS. ALL EXPOSED WELDS TO BE GROUND SMOOTH.
4. REPAIR ALL DAMAGED COATINGS.
5. INFORMATION SHOWN IS FOR REFERENCE ONLY. STAIR DESIGN SHALL BE PER THE STAIR SUPPLIER AND SPECIFICATION SECTION 05 50 13.

7 TYPICAL STRINGER BEND

NO SCALE

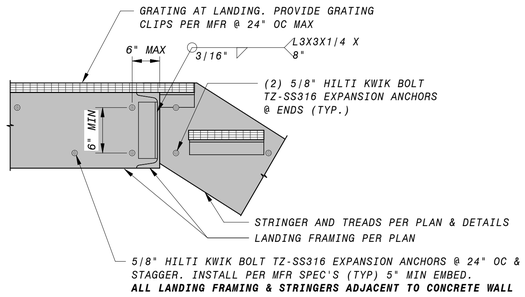

NOTES:
1. CORROSION PROTECTION REQUIRED AT DISSIMILAR METALS.
2. ALL STEEL ELEMENTS TO BE GALVANIZED, UNO.
3. REFER TO SPECIFICATIONS FOR FINISH REQUIREMENTS. ALL EXPOSED WELDS TO BE GROUND SMOOTH.
4. REPAIR ALL DAMAGED COATINGS.
5. TAKE CARE TO NOT HIT (E) REINFORCEMENT.
6. 4" MIN EDGE DISTANCE FROM ALL CONCRETE EDGES.
7. INFORMATION SHOWN IS FOR REFERENCE ONLY. STAIR DESIGN SHALL BE PER THE STAIR SUPPLIER AND SPECIFICATION SECTION 05 50 13.

8 FRAMING TO CONCRETE WALL

NO SCALE

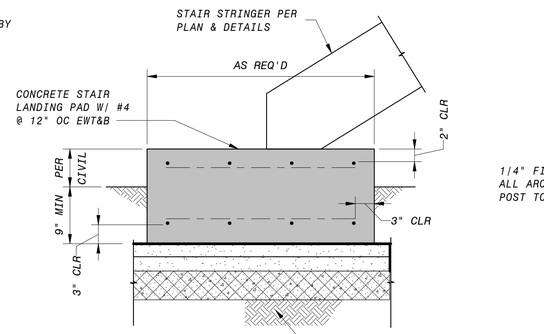

4 CONCRETE STAIR LANDING

NO SCALE

ALL HANDRAILS AND GUARDRAILS SHALL BE GALVANIZED STEEL UNLESS SPECIFICALLY NOTED OTHERWISE.

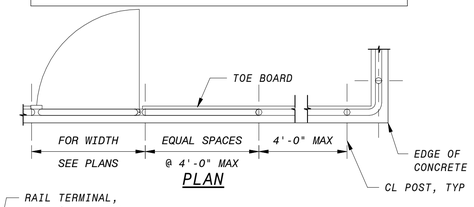

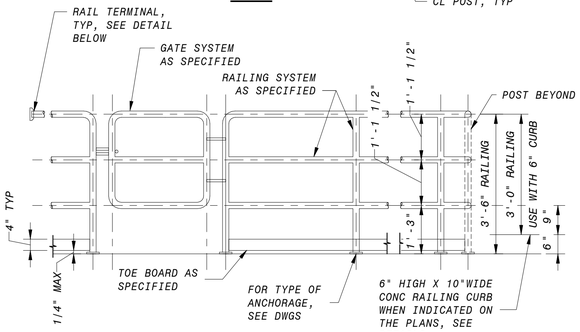

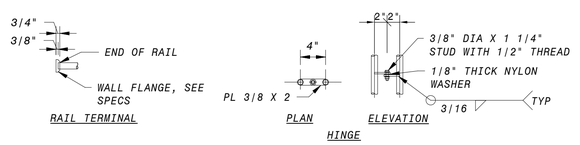

NOTES:
1. FASTEN RAIL TO WALL FLANGE PER MANUFACTURER'S RECOMMENDATIONS.
2. WALL FLANGE TO BE MOUNTED TO WALL WITH (2) 3/8" DIA SS316 WEDGE ANCHORS.
3. AT DESIGN BUILDER'S OPTION, FABRICATE HINGES OR PROVIDE OTHER HINGES AS SPECIFIED.
4. RAILING DESIGN SHALL BE PER MANUFACTURER AND SHALL MEET THE LATEST OSHA AND CBC REQUIREMENTS.
5. RAILING MATERIAL AND FABRICATION SHALL BE AS INDICATED ON DESIGN DRAWINGS AND IN THE PROJECT SPECIFICATIONS FOR HANDRAILING AND GUARDRAILING.
6. THE GUARDRAIL AND HANDRAIL CONFIGURATIONS INCLUDED IN THESE DESIGN DRAWINGS WILL NOT SATISFY ADA REQUIREMENTS FOR HANDICAPPED ACCESSIBILITY. WHERE THE DRAWINGS SPECIFICALLY NOTE CONFORMANCE WITH ADA STANDARDS IS REQUIRED, THE RAILING SUPPLIER SHALL MODIFY THE CONFIGURATIONS TO MEET THE MOST STRINGENT ACCESSIBILITY STANDARDS APPLICABLE TO THE PROJECT.

5 RAILING - 3 RAIL GUARDRAIL

NO SCALE

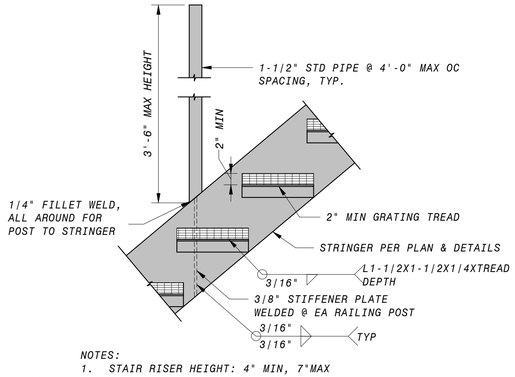

NOTES:
1. STAIR RISER HEIGHT: 4" MIN, 7"MAX
   STAIR TREAD DEPTH: 11" MIN
   DESIGN-BUILDER TO COORDINATE TREAD RISE/RUN WITH PROPOSED ELEVATIONS AND FIELD CONDITIONS. CORROSION PROTECTION REQUIRED AT DISSIMILAR METALS.
2. ALL STEEL ELEMENTS TO BE GALVANIZED, UNO.
3. REFER TO SPECIFICATIONS FOR FINISH REQUIREMENTS. ALL EXPOSED WELDS TO BE GROUND SMOOTH.
4. REPAIR ALL DAMAGED COATINGS.
5. INFORMATION SHOWN IS FOR REFERENCE ONLY. STAIR DESIGN SHALL BE PER THE STAIR SUPPLIER AND SPECIFICATION 05 50 13.

1 TYPICAL STAIR STRINGER & TREADS

NO SCALE

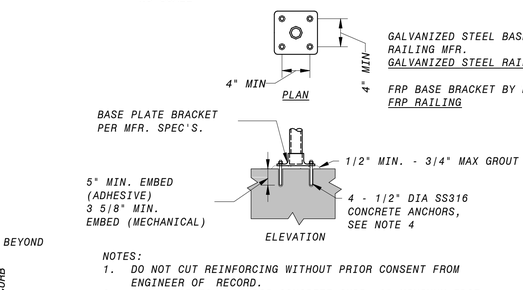

NOTES:
1. DO NOT CUT REINFORCING WITHOUT PRIOR CONSENT FROM ENGINEER OF RECORD.
2. ANCHORAGE TO 4000 PSI CONCRETE CURB. 3" MINIMUM EDGE DISTANCE TO ANCHOR.
3. PROVIDE PROTECTION FOR DISSIMILAR METALS AND CONCRETE PER SPECIFICATIONS.
4. CONCRETE ANCHOR SIZE AND EMBEDMENTS CALCULATED FOR HILTI ADHESIVES, RE-500-V3, AND HILTI MECHANICAL ANCHORS KBTZ. IF ALTERNATIVE ANCHOR SYSTEM IS USED, DESIGN-BUILDER TO SUBMIT STAMPED CALCULATIONS AND DRAWINGS.
5. CARE TO BE TAKEN NOT TO HIT (E) REINF.

2 RAILING POST ANCHORAGE - CONCRETE TOP MOUNT

NO SCALE

NOTES:
1. ALL STEEL ELEMENTS TO BE GALVANIZED, UNO.
2. REFER TO SPECIFICATIONS FOR FINISH REQUIREMENTS. ALL EXPOSED WELDS TO BE GROUND SMOOTH.
3. TAKE CARE TO NOT HIT (E) REINFORCEMENT.
4. REPAIR ALL DAMAGED COATINGS.

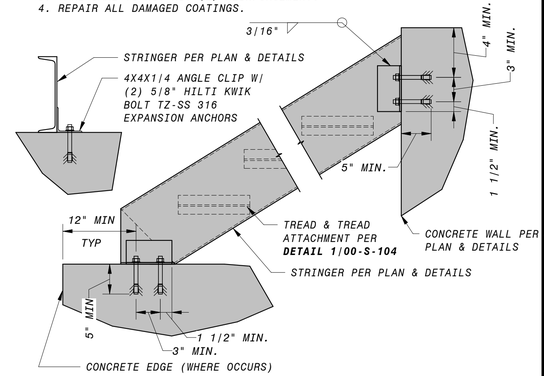

3 STRINGER TO CONCRETE

NO SCALE

NO.	BY	CHK	APP	DATE	REVISIONS AND RECORD OF USE
0				5/19/2020	ISSUED FOR CONSTRUCTION

REGISTERED PROFESSIONAL ENGINEER CHARLES R. ASHLEY S5258 STRUCTURAL STATE OF CALIFORNIA

Ashley&Vance ENGINEERING, INC | JOINT VENTURE | BLACK & VEATCH | FILANC

CITY OF MORRO BAY
FILANC BLACK & VEATCH DB PROPOSAL
WATER RECLAMATION FACILITY (WRF)

GENERAL
STRUCTURAL
STANDARD DETAILS

DESIGNED:	M. MARSH
DETAILED:	S. BENJAMIN
CHECKED:	I. SHOEBRIDGE
APPROVED:	C. ASHLEY
DATE:	5/19/2020

0 1/2 1
IF THIS BAR DOES NOT MEASURE 1" THEN DRAWING IS NOT TO FULL SCALE

PROJECT NO. 400530

00-S-104
SHEET 157 OF 412

PLOTTED: 5/19/2020 2:45:52 PM
D400530

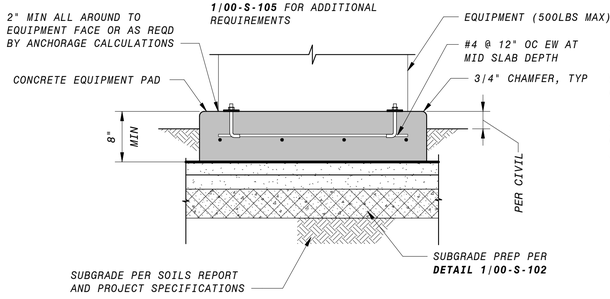

10 TYP EXTERIOR EQUIPMENT PAD

NO SCALE

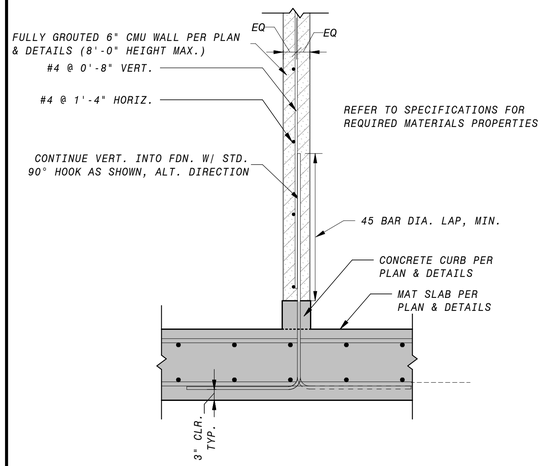

6 CMU SEPARATION WALL

NO SCALE

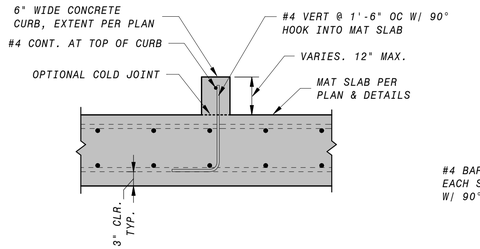

7 CONCRETE CURB AT MAT SLAB

NO SCALE

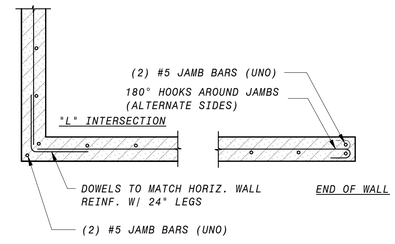

8 TYP CMU WALL INTERSECTIONS

NO SCALE

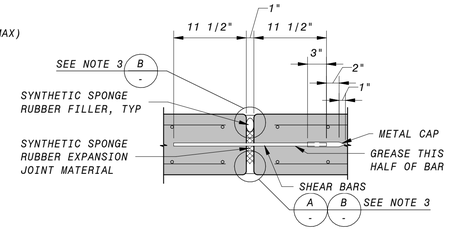

NON-WATER BEARING SLAB OR WALL

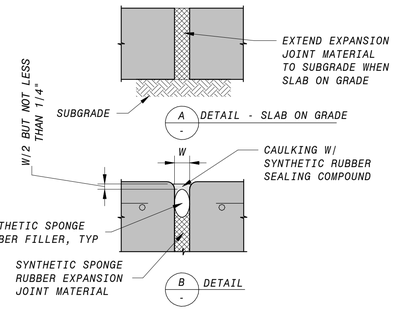

NOTES:
1. FOR WALLS AND EXPOSED SLABS EDGES, FORM ALL JOINT EDGES AT 1/4" CHAMFER.
2. "W" = 1" UNLESS OTHERWISE INDICATED ON THE DRAWINGS. MIN JOINT WIDTH = 3/8".
3. USE DETAIL "A" AT UNDERSIDE OF SLABS ON GRADE ONLY. USE DETAIL "B" AT ALL OTHER LOCATIONS.
4. PROVIDE 3/4" SHEAR BARS @ 1'-6" CTRS ACROSS JOINT UNLESS NOTED OTHERWISE.
5. REINFORCING STEEL SHALL NOT BE EXTENDED ACROSS JOINT UNLESS NOTED OTHERWISE.
6. SHEAR BARS SHALL BE SMOTH FREE FROM RUST OR SCALE, AND GREASED TO PREVENT BOND (ONE HALF OF BAR ONLY).

5 EXPANSION JOINT

NO SCALE

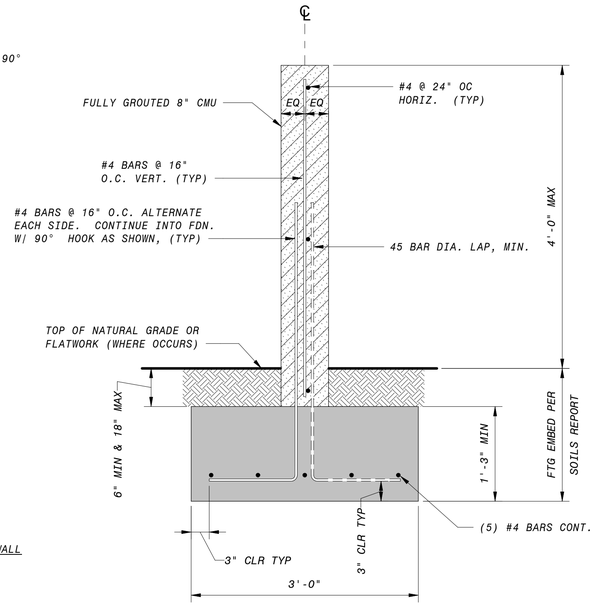

4 CMU PATIO WALL

NO SCALE

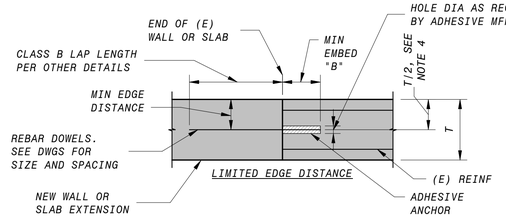

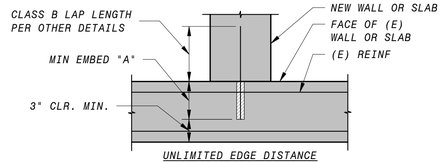

DOWEL SIZE	MIN EDGE DISTANCE	MIN EMBED A	MIN EMBED B
#3	2 5/8"	5 5/8"	8 1/4"
#4	3 1/2"	7 1/2"	11"
#5	4 3/8"	9 3/8"	13 3/4"
#6	5 1/4"	11 1/4"	16 1/2"
#7	6 1/8"	13 1/8"	19 1/4"
#8	7"	15"	22"
#9	7 7/8"	16 7/8"	24 3/4"

NOTE:
1. SPECIAL INSPECTION REQUIRED IN ACCORDANCE WITH THE CURRENT EDITION OF THE CALIFORNIA BUILDING CODE AND PRODUCT ESR REPORT.
2. FOLLOW ADHESIVE MANUFACTURER'S INSTRUCTIONS & ESR REPORT FOR INSTALLATION.
3. USE MINIMUM EMBEDMENTS SHOWN, EXCEPT USE MANUFACTURER'S MINIMUM RECOMMENDED EMBEDMENT IF GREATER.
4. LOCATE DOWELS CENTERED IN WALL OR SLAB UNLESS OTHERWISE NOTED ON DRAWINGS. WHERE 2 ROWS OF DOWELS INDICATED, STAGGER SPACING & LOCATE ALTERNATING DOWELS AT MINIMUM EDGE DISTANCE FROM OPPOSITE FACES.
5. CARE SHALL BE TAKEN TO AVOID EXISTING REINFORCEMENT.
6. COORDINATE WITH DESIGN-BUILDER PRIOR TO DOWELING. EDGE DISTANCE AND EMBEDMENT MAY VARY DEPENDING ON CONDITION.
7. ADHESIVE MAY BE HILTI HIT-RE 500 V3 OR SIMPSON SET-3G.
8. CONFORM TO THE REQUIREMENTS OF SPECIFICATION SECTION 05 81 00, ANCHORAGE IN CONCRETE AND MASONRY

3 ADHESIVE DOWELS

NO SCALE

NOTES:
1. EPOXY SHALL BE HILTI HIT-RE 500 V3 (OR EQ). INSTALL PER MFR SPEC'S AND ESR REPORT. SPECIAL INSPECTION REQUIRED. MIN EDGE DISTANCES PER ESR REPORT.
2. ALL-THREAD ANCHORS TO BE SS316.
3. CARE TO BE TAKEN TO NOT HIT REINF.
4. GATE SHOP DRAWINGS AND ANCHORAGE TO BE COORD WITH EOR PRIOR TO INSTALLATION.

ANCHOR DIA.	MIN. EMBED. (IN)
1/2"	4"
5/8"	5"
3/4"	6"
7/8"	7"

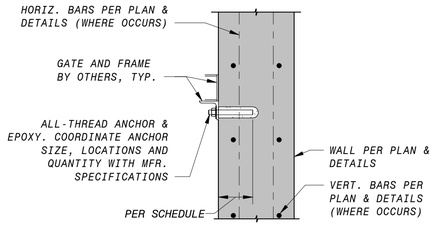

PLAN VIEW
FRAME EMBED. AT WALL (SLAB SIM.)

9 SURFACE MOUNT GATE FRAME DETAIL

NO SCALE

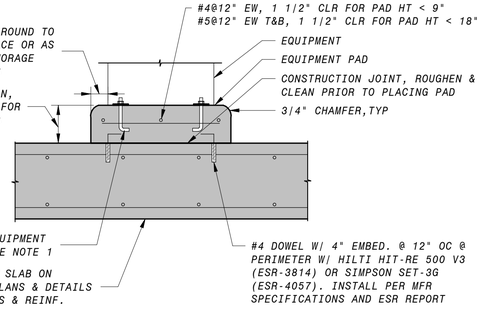

NOTES:
1. EQUIPMENT MANUFACTURER TO PROVIDE ANCHORAGE DESIGN INTO EQUIPMENT PAD AS SHOWN AND IN CONFORMANCE WITH THE PROJECT SPECIFICATIONS. INSTALL PER MANUFACTURER INSTRUCTIONS.
2. CONCRETE PADS FOR ELECTRICAL EQUIPMENT SHALL BE 4" HIGH, UNLESS NOTED OTHERWISE.
3. PAD SIZE SHALL BE MINIMUM INDICATED OR AS SHOWN ON THE PLANS OR AS INDICATED BY THE MANUFACTURER AND APPROVED BY THE DESIGN-BUILDER.
4. THE SIZE, NUMBER, TYPE, LOCATION, AND THREAD PROJECTION OF THE ANCHOR BOLTS SHALL BE DETERMINED BY THE EQUIPMENT MANUFACTURER. ANCHOR BOLTS SHALL BE HELD IN POSITION WITH A TEMPLATE OR OTHER ACCEPTABLE MEANS, MATCHING THE BASE PLATE, WHILE PAD IS BEING PLACED.
5. EQUIPMENT BASES SHALL BE INSTALLED LEVEL UNLESS INDICATED OTHERWISE
6. WEDGES, SHIMS, OR LEVELING NUTS SHALL BE USED TO SUPPORT THE BASE WHILE THE NON-SHRINK GROUT IS PLACED. WEDGES OR SHIMS THAT ARE LEFT IN PLACE SHALL NOT BE EXPOSED TO VIEW.
7. WHERE EQUIPMENT OR PIPING ELEVATION REQUIRE A PAD HEIGHT LESS THAN THE MINIMUM SHOWN, CONSULT WITH DESIGN-BUILDER.
8. 1 1/2" MAX., HIGH-STRENGTH, NON-SHRINK GROUT (WHERE REQUIRED) IS PERMITTED.
9. POST-INSTALLED CONCRETE ANCHORS MAY BE USED IN LIEU OF CAST IN PLACE ANCHOR BOLTS WHEN APPROVED BY THE EQUIPMENT MANUFACTURER AND EOR.

1 TYP INTERIOR CONCRETE EQUIPMENT PAD

NO SCALE

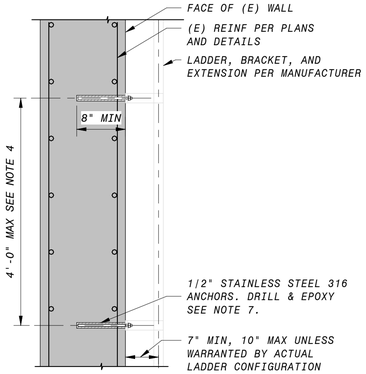

NOTE:
1. SPECIAL INSPECTION REQUIRED IN ACCORDANCE WITH THE CURRENT EDITION OF THE CALIFORNIA BUILDING CODE AND PRODUCT'S ESR REPORT.
2. FOLLOW ADHESIVE MANUFACTURER'S INSTRUCTIONS & ESR REPORT FOR INSTALLATION.
3. USE MINIMUM EMBEDMENTS SHOWN, EXCEPT USE MANUFACTURER'S MINIMUM RECOMMENDED EMBEDMENT IF GREATER.
4. IF LADDER CONFIGURATION REQUIRES A GREATER DISTANCE BETWEEN SUPPORTS THAN INDICATED ON TYPICAL DETAILS, THE LADDER SUPPLIER SHALL DESIGN THE LADDER, LADDER BRACKET, AND LADDER BRACKET CONNECTIONS FOR THE INDICATED SPAN IN ACCORDANCE WITH NOTE 6 BELOW.
5. CARE SHALL BE TAKEN TO AVOID EXISTING REINFORCEMENT.
6. ALL LADDERS SHALL BE DESIGNED AND FABRICATED BY LADDER SUPPLIER IN CONFORMANCE WITH THE LATEST ISSUE OF OASHA/ANSI A14.3, SECTION 1910.27 APPLICABLE BUILDING CODE STANDARDS FOR FIXED WALL LADDERS, AND REQUIREMENTS OF THE CONTRACT DRAWINGS AND SPECIFICATIONS. GENERAL CONFIGURATION AND DETAILS SHALL CONFORM WITH THIS DRAWING. ALL LADDERS TO BE GALVANIZED, UNO.
7. ADHESIVE MAY BE HILTI HIT-RE 500 V3 OR SIMPSON SET-3G.
8. CONFORM TO THE REQUIREMENTS OF SPECIFICATION SECTION 05 81 00, ANCHORAGE IN CONCRETE AND MASONRY.
9. REFER TO SPECIFICATION 06 74 17 FOR LADDER MATERIAL AND ADDITIONAL REQUIREMENTS.

2 LADDER ATTACHMENT

NO SCALE

NO.	BY	CHK	APP	DATE	REVISIONS AND RECORD OF USE
0				5/19/2020	ISSUED FOR CONSTRUCTION

REGISTERED PROFESSIONAL ENGINEER CHARLES R. ASH S5258 STRUCTURAL STATE OF CALIFORNIA

Ashley&Vance ENGINEERING, INC | JOINT VENTURE | BLACK & VEATCH | FILANC

CITY OF MORRO BAY
FILANC BLACK & VEATCH DB PROPOSAL
WATER RECLAMATION FACILITY (WRF)

GENERAL
STRUCTURAL
STANDARD DETAILS

DESIGNED: M. MARSH
DETAILED: S. BENJAMIN
CHECKED: I. SHOEBRIDGE
APPROVED: C. ASHLEY
DATE: 5/19/2020

0 1/2 1
IF THIS BAR DOES NOT MEASURE 1" THEN DRAWING IS NOT TO FULL SCALE

PROJECT NO. 400530

00-S-105
SHEET 158 OF 412

PLOTTED: 5/19/2020 2:45:53 PM
D400530

NOTE:
1. LOAD BEARING STUDS MUST BE SEATED TIGHT TO TRACK WEB (MAX. GAP OF 1/16")
2. FOR USE WITH INTERIOR WALLS ONLY.
3. MAXIMUM 5PSF HORIZONTAL LOADING, LIMITED TO WALLS LESS THAN 22' TALL.

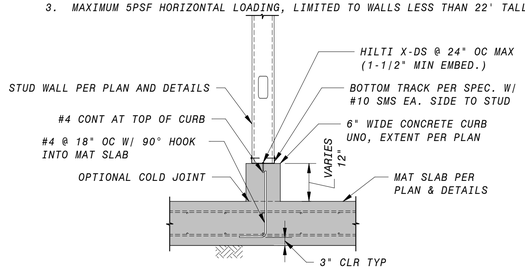

9 BOTTOM OF WALL TO CURB
NO SCALE

NOTE:
1. LOAD BEARING STUDS MUST BE SEATED TIGHT TO TRACK WEB (MAX. GAP OF 1/16")
2. FOR USE WITH INTERIOR WALLS ONLY.
3. MAXIMUM 5PSF HORIZONTAL LOADING, LIMITED TO WALLS LESS THAN 22'-0" TALL

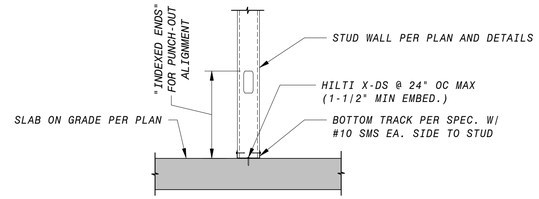

6 BOTTOM OF WALL TO SLAB ON GRADE
NO SCALE

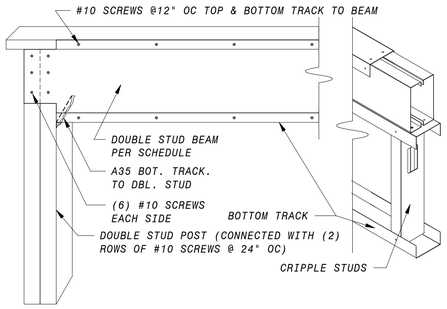

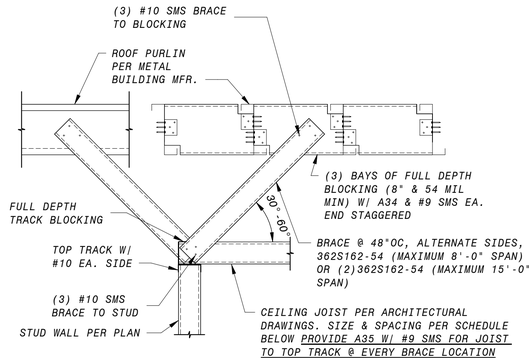

INT. BOXED HEADER SCHEDULE[1,2]		
MAX. SPAN	SIZE	GRADE
6'-0"	(2) 550S162-43	33 KSI
10'-0"	(2) 600S162-43	33 KSI

NOTES:
1. WEB STIFFENERS REQUIRED AT ENDS.
2. TYPICAL HEADER DESIGN BASED ON CEILING LOADING OF 8PSF TOTAL DEAD LOAD, 5PSF LIVE LOAD W/ MAX SPAN OF 24'-0".

3 TYPICAL HEADER
NO SCALE

WALL SCHEDULE AT TYPICAL INTERIOR PARTITIONS				
WALL	MAX HT	SIZE	GRADE	SPACING
TYP INTERIOR WALL	15'-0"	362S137-43	33 KSI	24" OC
PLUMBING WALL	15'-0"	600S162-43	33 KSI	24" OC
INTERIOR WALL W/ CASEWORK, GRAB BAR OR HAND RAILS	15'-0"	362S200-54	50 KSI	12" OC
	15'-0"	600S200-54	50 KSI	16" OC

NOTES:
1. WALL STUDS SHALL BE BRACED ALONG THEIR LENGTH AT 48" OC IF NOT SHEATHED WITH 5/8" GYP BOARD OR 1/2" PLYWOOD EACH SIDE, FULL HEIGHT.
2. WALL DESIGN BASED ON 5PSF LATERAL LOAD AND L/240 DEFLECTION LIMIT.

1 TOP OF WALL BRACING
NO SCALE

SIMPSON STRONG-TIE HUC HANGER TO PEMB COLUMN, WELD PER MFR SPECS W/MAX NUMBER OF WELD SEGMENTS. CONNECT HANGER TO HEADER W/ MAX NUMBER OF #10 SCREWS

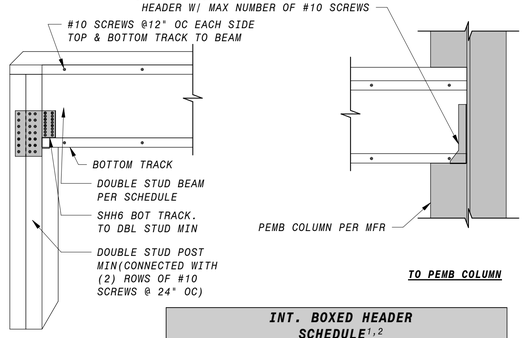

TO PEMB COLUMN

TO POST

INT. BOXED HEADER SCHEDULE[1,2]		
MAX. SPAN	SIZE	GRADE
6'-0"	(2) 550S162-43	33 KSI
19'-6"	(2) 1400S200-68	33 KSI

NOTES:
1. WEB STIFFENERS REQUIRED AT ENDS.
2. HEADER DESIGN BASED ON 16PSF TOTAL DEAD LOAD (4 LAYER GYP. WALL BOARD), 5PSF LIVE LOAD (NON-ACCESSIBLE) AND L/240 DEFLECTION LIMIT.

10 TYPICAL ELECTRICAL ROOM HEADER
NO SCALE

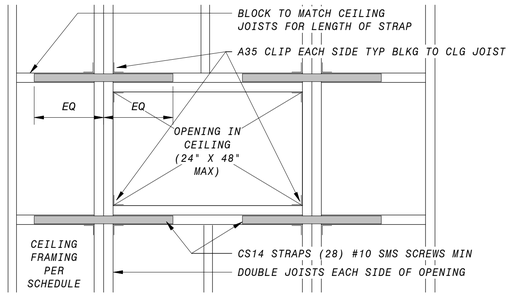

7 TYPICAL BLOCKOUT FRAMING
NO SCALE

SEE DETAIL 2 THIS SHEET FOR TYPICAL CEILING JOIST SCHEDULE.

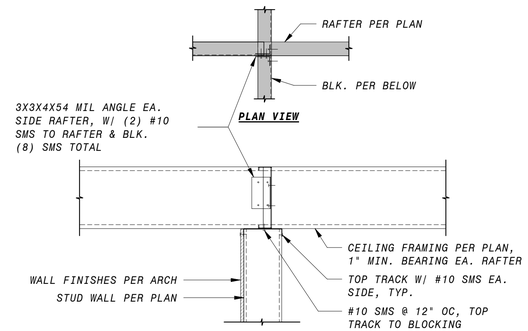

4 CEILING JOISTS TO INTERIOR WALL
NO SCALE

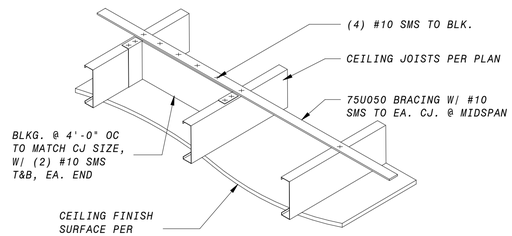

5 TYPICAL CEILING JOIST BRACING
NO SCALE

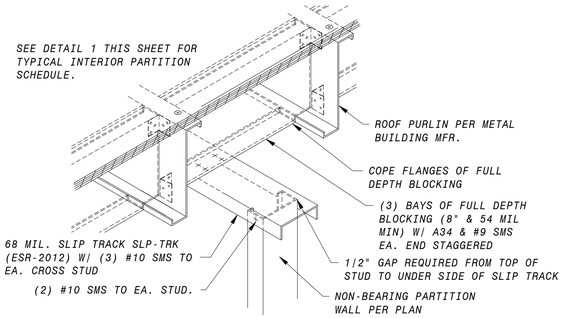

WALL SCHEDULE AT TYPICAL INTERIOR PARTITIONS				
WALL	MAX. HT.	SIZE	GRADE	SPACING
TYP INTERIOR WALL	15'-0"	362S137-43	33 KSI	24" OC
	22'-0"	362S162-54	50 KSI	12" OC
PLUMBING WALL	22'-0"	600S162-43	33 KSI	24" OC
INTERIOR WALL W/ CASEWORK, GRAB BAR OR HAND RAILS	15'-0"	362S200-54	50 KSI	12" OC
	15'-0"	600S200-54	50 KSI	16" OC
	22'-0"	600S2000-54	50 KSI	12" OC

NOTES:
1. WALL STUDS SHALL BE BRACED ALONG THEIR LENGTH AT 48" OC IF NOT SHEATHED WITH 5/8" GYP BOARD OR 1/2" PLYWOOD EACH SIDE, FULL HEIGHT.
2. WALL DESIGN BASED ON 5PSF LATERAL LOAD AND L/240 DEFLECTION LIMIT.

8 TOP OF STEEL STUD WALL SUPPORT
NO SCALE

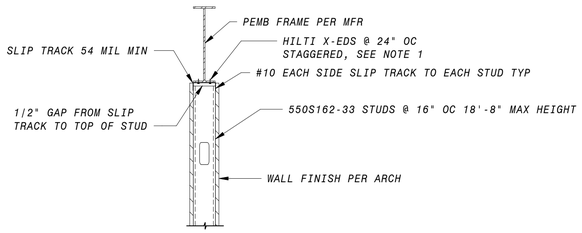

NOTES:
1. MINIMUM THICKNESS OF BASE MATERIAL (STEEL)=1/4" COORDINATE AS REQUIRED.
2. WALL STUDS SHALL BE BRACED ALONG THEIR LENGTH AT 48" OC IF NOT SHEATHED WITH 5/8" GYP BOARD OF 1/2" PLYWOOD EACH SIDE, FULL HEIGHT.
3. WALL DESIGN BASED ON 5PSF LATERAL LOAD AND L/240 DEFLECTION LIMIT.

11 TOP OF WALL TO PEMB FRAME
NO SCALE

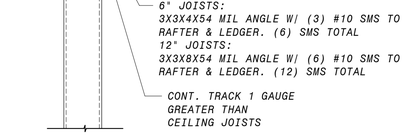

CEILING JOIST SCHEDULE (MAX SPAN, FT-IN)			
SECTION (SSMA)	Fy (KSI)	ALLOWABLE SPAN	SPACING
TYPICAL CEILING LOADING [1,3,4,5,6,7]			
600S162-43	33	15'-0"	24" O.C.
1200S200-54	50	24'-0"	24" O.C.
E-ROOM LOADING [2,3,4,5,6,7]			
1200S200-54	50	20'-0"	24" O.C.

NOTES:
1. TYPICAL JOIST DESIGN BASED ON 8PSF TOTAL DEAD LOAD (2 LAYER GYP WALL BOARD), 5PSF LIVE LOAD (NON-ACCESSIBLE) AND L/240 DEFLECTION LIMIT.
2. TYPICAL JOIST DESIGN BASED ON 16PSF TOTAL DEAD LOAD (4 LAYER GYP. WALL BOARD), 5PSF LIVE LOAD (NON-ACCESSIBLE) AND L/240 DEFLECTION LIMIT.
3. 1" MINIMUM BEARING REQUIRED AT EACH END.
4. WEB PUNCHOUTS MAY NOT OCCUR NEAR SUPPORTS.
5. STORAGE LOADING NOT PERMITTED.
6. WEB STIFFENERS REQUIRED AT ENDS.
7. BRACING REQUIRED AT MIDSPAN FOR SPANS > 14'

2 CEILING JOIST TO STUD WALL
NO SCALE

NO.	BY	CHK	APP	DATE	REVISIONS AND RECORD OF USE
0				5/19/2020	ISSUED FOR CONSTRUCTION

REGISTERED PROFESSIONAL ENGINEER CHARLES R. ASHLEY S5258 STRUCTURAL STATE OF CALIFORNIA

Ashley&Vance ENGINEERING, INC | JOINT VENTURE | BLACK&VEATCH | FILANC

CITY OF MORRO BAY
FILANC BLACK & VEATCH DB PROPOSAL
WATER RECLAMATION FACILITY (WRF)

GENERAL
STRUCTURAL
STANDARD DETAILS

DESIGNED: M. MARSH
DETAILED: S. BENJAMIN
CHECKED: I. SHOEBRIDGE
APPROVED: C. ASHLEY
DATE: 5/19/2020

0 1/2 1
IF THIS BAR DOES NOT MEASURE 1" THEN DRAWING IS NOT TO FULL SCALE

PROJECT NO. 400530

00-S-106
SHEET 159 OF 412

PLOTTED: 5/19/2020 2:45:55 PM
D400530

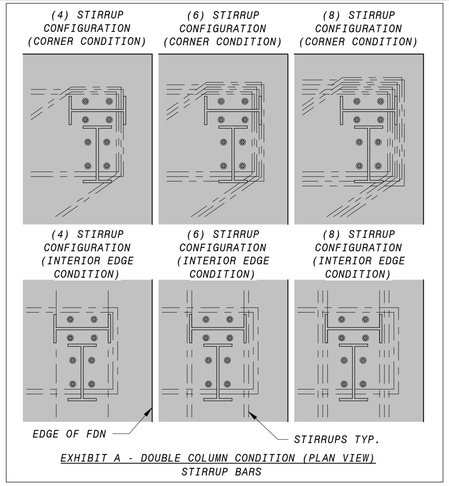

EXHIBIT A - DOUBLE COLUMN CONDITION (PLAN VIEW)
STIRRUP BARS

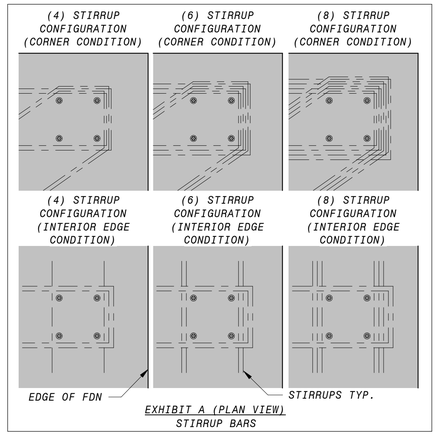

EXHIBIT A (PLAN VIEW)
STIRRUP BARS

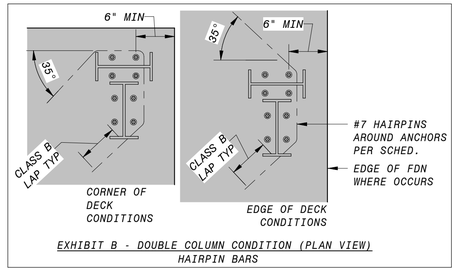

EXHIBIT B - DOUBLE COLUMN CONDITION (PLAN VIEW)
HAIRPIN BARS

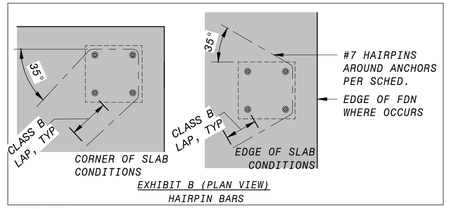

EXHIBIT B (PLAN VIEW)
HAIRPIN BARS

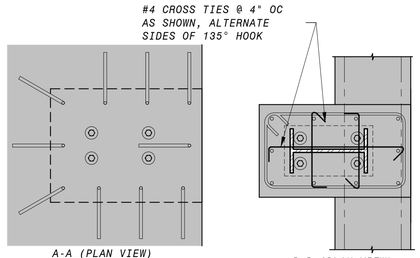

A-A (PLAN VIEW)
HOOK ORIENTATION

B-B (PLAN VIEW)
TIE & CROSSTIE ORIENTATION
CL COLUMN = CL PILASTER

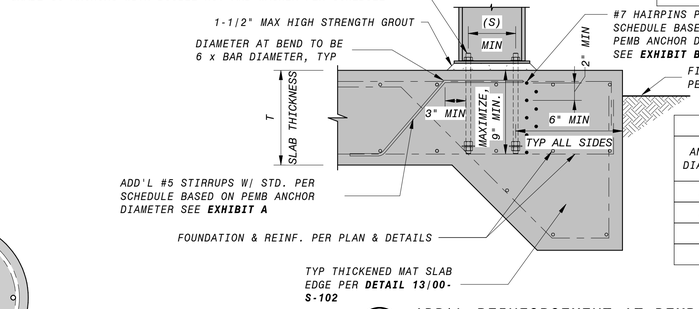

ADD'L REINFORCEMENT SCHEDULE

ANCHOR DIAMETER	NO. OF STIRRUPS (#5)	NO. OF HAIRPINS (#7)	SPACING (S) MINIMUM	WASHER SIZE
5/8"	4	3	3"	1/2X1-3/4X1-3/4"
3/4"	4	4	4"	1/2X2-1/4X2-1/4"
7/8"	6	5	4"	1/2X2-1/2X2-1/2"
1"	8	7	6"	5/8X3X2-3/4"

2 ADD'L REINFORCEMENT AT PEMB ANCHORAGE
95-S-101 NO SCALE

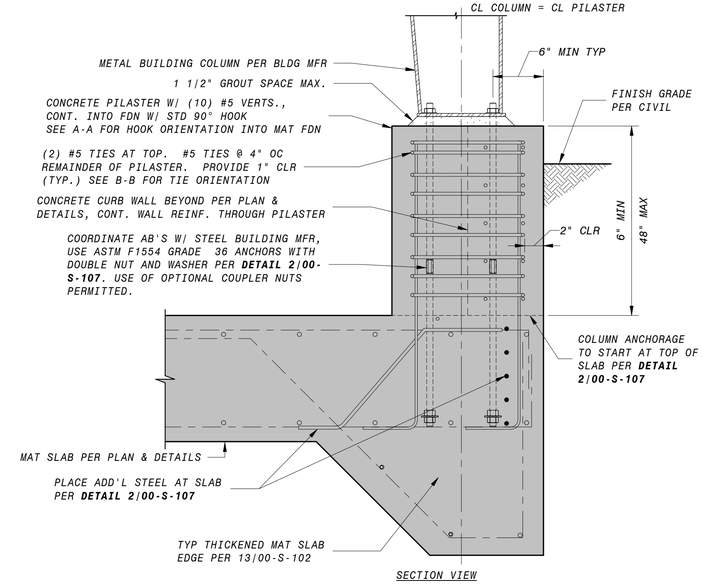

SECTION VIEW

1 STEEL FRAME AT CONCRETE PILASTER
NO SCALE

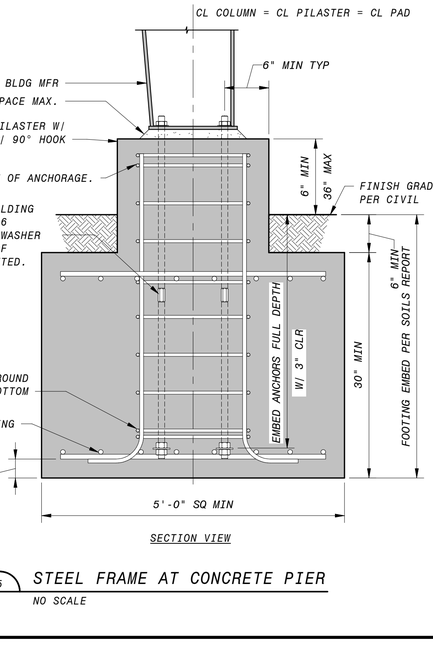

PILASTER PLAN VIEW

SECTION VIEW

5 STEEL FRAME AT CONCRETE PIER
NO SCALE

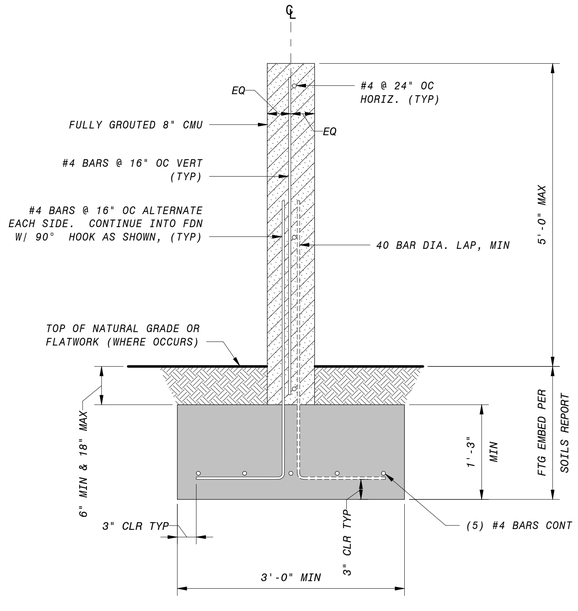

4 CMU TRASH ENCLOSURE WALL
NO SCALE

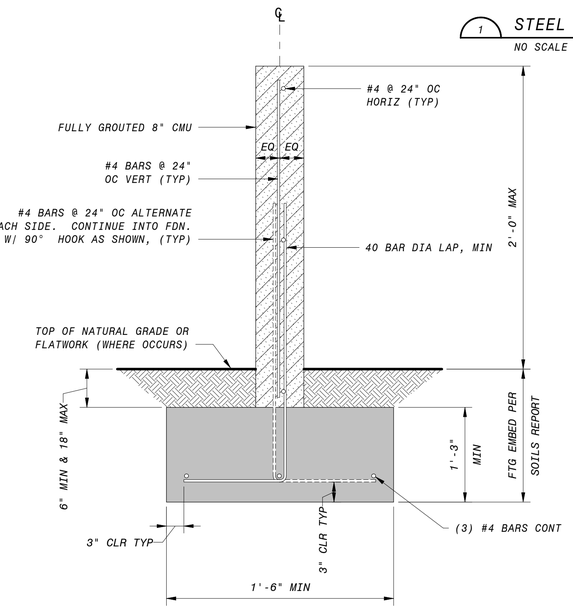

6 CMU WASHDOWN WALL
NO SCALE

NO.	BY	CHK	APP	DATE	REVISIONS AND RECORD OF USE
0				5/19/2020	ISSUED FOR CONSTRUCTION

REGISTERED PROFESSIONAL ENGINEER CHARLES R. ASHLEY S5258 STRUCTURAL STATE OF CALIFORNIA

Ashley&Vance ENGINEERING, INC
JOINT VENTURE
BLACK&VEATCH
FILANC

CITY OF MORRO BAY
FILANC BLACK & VEATCH DB PROPOSAL
WATER RECLAMATION FACILITY (WRF)

GENERAL
STRUCTURAL
STANDARD DETAILS

DESIGNED: M. MARSH
DETAILED: S. BENJAMIN
CHECKED: I. SHOEBRIDGE
APPROVED: C. ASHLEY
DATE: 5/19/2020

0 1/2 1
IF THIS BAR DOES NOT MEASURE 1" THEN DRAWING IS NOT TO FULL SCALE

PROJECT NO.
400530

00-S-107
SHEET
160 OF 412

PLOTTED: 5/19/2020 2:45:56 PM
D400530

NOTES:
1. INFORMATION SHOWN IS FOR REFERENCE ONLY. STAIR DESIGN SHALL BE PER THE STAIR SUPPLIER AND SPECIFICATION 05 50 13.

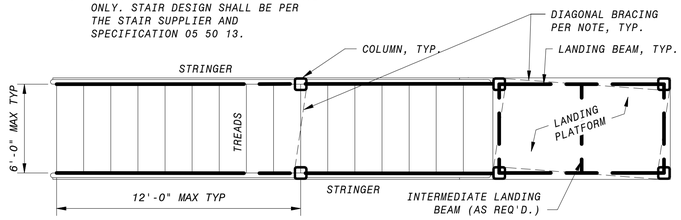

TYP. STAIR LAYOUT REFERENCE

TYP. STEEL STAIR CONSTRUCTION

TYPICAL FRAMING	
TREADS:	2" MIN GRATTING. SEE NOTE BELOW
STRINGERS:	MC12X14.3 MAX SPAN 12'-0"
LANDING BEAMS:	MC12X14.3 MAX SPAN 12'-0"
LANDING PLATFORM:	2" MIN GRATING. SEE NOTE BELOW
COLUMNS:	HSS4X4X1/4" MAX HEIGHT 12'-0"

DIAGONAL BRACING
AT LANDINGS AND SUPPORTS OVER 6'-0" TALL. PROVIDE L4X4X1/4" DIAGONAL BRACING EACH SIDE W/ 3/16" FILLET WELD ALL AROUND @ EACH END TO COLUMN.

GRATING
FURNISH GALVANIZED STEEL GRATING FOR LANDINGS AND TREADS DESIGNED FOR OUTDOOR INSTALATION IN A COSTAL ENVIRONMENT. GRATING SHALL BE DESIGNED FOR 100PSF UNIFORM DISTRIBUTED LIVE LOAD, 300 LB CONCENTRATED LIVE LOAD, AND LESSER OF L/200 OR 1/4" DEFLECTION AND MAXIMUM SPAN OF 6'-0".

TYPICAL DETAILS

1/00-S-104	STAIR TREAD TO STRINGER
3/00-S-104	STRINGER TO CONCRETE
4/00-S-104	CONCRETE STAIR LANDING
7/00-S-104	TYPICAL STRINGER BEND
8/00-S-104	STRINGER OR LANDING BEAM TO CONCRETE WALL
9/00-S-104	CHANNEL TO COLUMN
10/00-S-104	COLUMN TO MAT SLAB
11/00-S-104	FRAMING TO CONCRETE WALL AT LANDING
2/00-S-108	GUARDRAIL POST TO PLATFORM BEAM
3/00-S-108	STRINGER TO STEEL BEAM
4/00-S-108	CHANNEL TO CHANNEL
5/00-S-108	STRINGER TO INTERMEDIATE COLUMN

6 TYPICAL STAIR FRAMING
NO SCALE

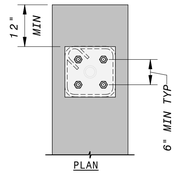

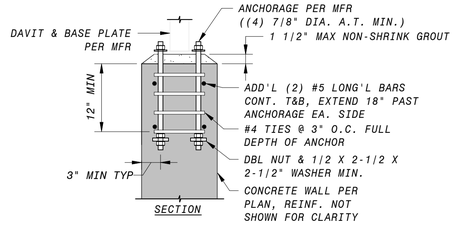

NOTES:
1. DAVIT SHOP DRAWINGS AND LOADING CRITERIA TO BE PROVIDED TO EOR PRIOR TO INSTALATION.
2. PROVIDE PROTECTION FOR DISSIMILAR METALS AND CONCRETE PER SPECIFICATIONS AS REQ'D.
3. ANCHORAGE TO BE ASTM F1554 GR. 36 MIN.
4. DAVIT MANUFACTURER TO PROVIDE ANCHORAGE DESIGN INTO CONCRETE WALL BELOW AS SHOWN AND IN CONFORMANCE WITH THE PROJECT SPECIFICATIONS. INSTALL PER MANUFACTURER SPECIFICATIONS.

9 DAVIT ANCHORAGE TO CIP WALL
NO SCALE

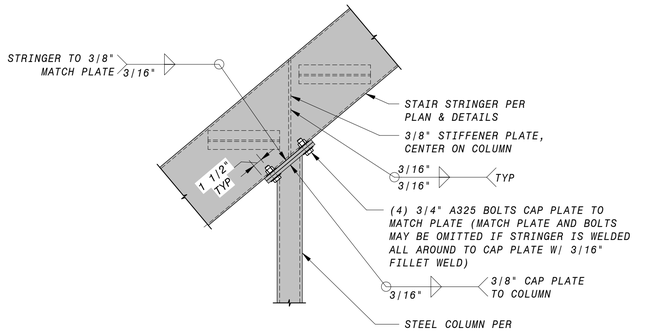

NOTES:
1. CORROSION PROTECTION REQUIRED AT DISSIMILAR METALS.
2. ALL STEEL ELEMENTS TO BE GALVANIZED.
3. REFER TO SPECIFICATIONS FOR FINISH REQUIREMENTS. ALL EXPOSED WELDS TO BE GROUND SMOOTH.
4. REPAIR ALL DAMAGED COATINGS.
5. INFORMATION SHOWN IS FOR REFERENCE ONLY. STAIR DESIGN SHALL BE PER THE STAIR SUPPLIER AND SPECIFICATION 05 50 13.

5 STRINGER TO COLUMN
NO SCALE

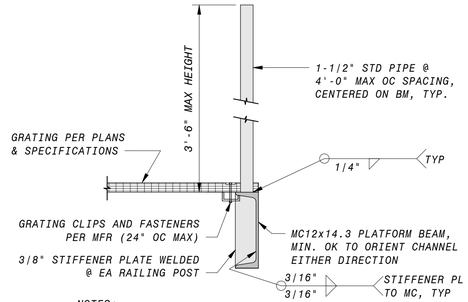

NOTES:
1. CORROSION PROTECTION REQUIRED AT DISSIMILAR METALS.
2. ALL STEEL ELEMENTS TO BE GALVANIZED, UNO.
3. REFER TO SPECIFICATIONS FOR FINISH REQUIREMENTS. ALL EXPOSED WELDS TO BE GROUND SMOOTH.
4. REPAIR ALL DAMAGED COATINGS.

2 GUARDRAIL POST TO PLATFORM BEAM
NO SCALE

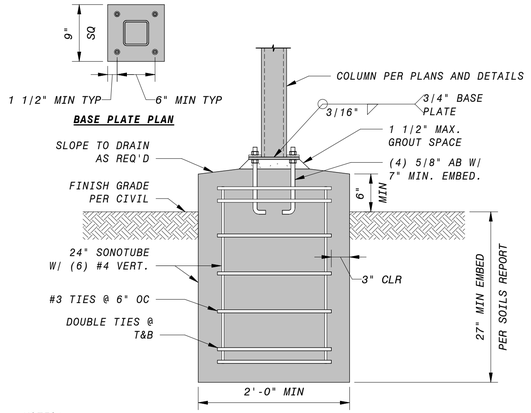

NOTES:
1. CORROSION PROTECTION REQUIRED AT DISSIMILAR METALS.
2. ALL STEEL ELEMENTS TO BE GALVANIZED, UNO.
3. REFER TO SPECIFICATIONS FOR FINISH REQUIREMENTS. ALL EXPOSED WELDS TO BE GROUND SMOOTH.
4. REPAIR ALL DAMAGED COATINGS.
5. SUBGRADE PER PROJECT SPECIFICATIONS AND GEOTECHNICAL REPORT.

7 STEEL COLUMN TO PIER FND
NO SCALE

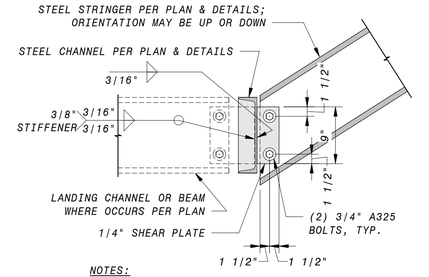

NOTES:
1. CORROSION PROTECTION REQUIRED AT DISSIMILAR METALS.
2. ALL STEEL ELEMENTS TO BE GALVANIZED, UNO.
3. REFER TO SPECIFICATIONS FOR FINISH REQUIREMENTS. ALL EXPOSED WELDS TO BE GROUND SMOOTH.
4. REPAIR ALL DAMAGED COATINGS.

3 STEEL STRINGER TO BEAM
NO SCALE

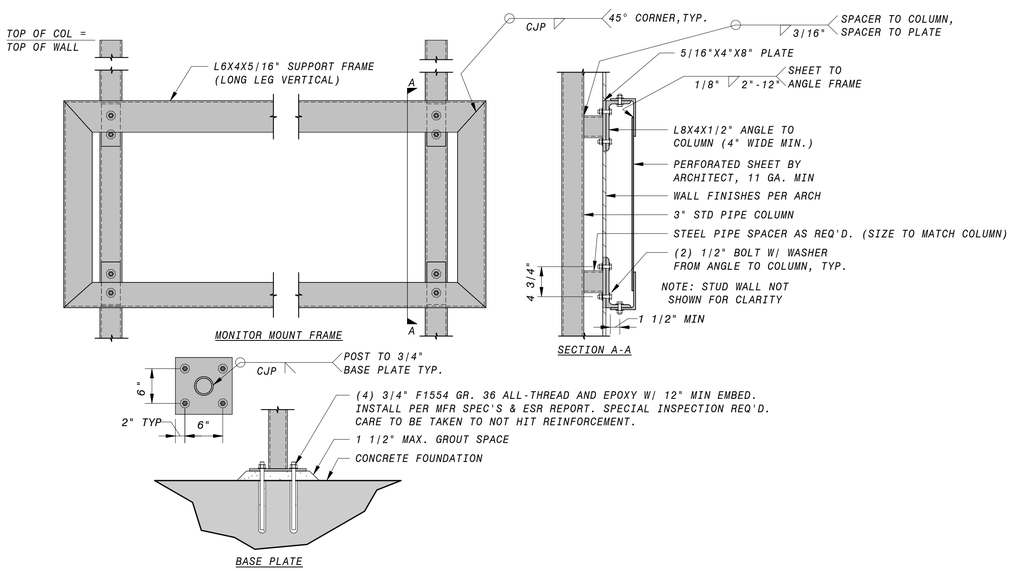

10 CONTROL ROOM MONITOR SUPPORT
NO SCALE

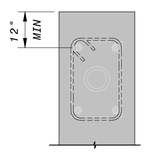

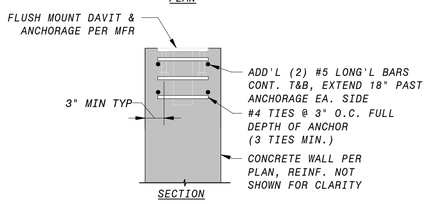

NOTES:
1. DAVIT SHOP DRAWINGS AND LOADING CRITERIA TO BE PROVIDED TO EOR PRIOR TO INSTALLATION.
2. PROVIDE PROTECTION FOR DISSIMILAR METALS AND CONCRETE PER SPECIFICATIONS AS REQ'D
3. DAVIT MANUFACTURER TO PROVIDE ANCHORAGE DESIGN INTO CONCRETE WALL BELOW AS SHOWN AND IN CONFORMANCE WITH THE PROJECT SPECIFICATIONS. INSTALL PER MANUFACTURER SPECIFICATIONS.
4. 9/00-S-108 FOR NON-FLUSH MOUNT CONDITIONS

8 FLUSH MOUNT DAVIT ANCHORAGE TO CIP WALL
NO SCALE

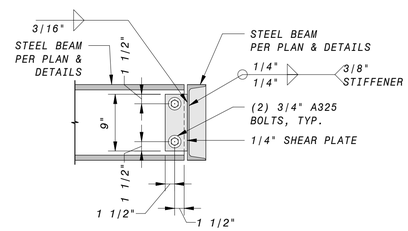

NOTES:
1. CORROSION PROTECTION REQUIRED AT DISSIMILAR METALS.
2. ALL STEEL ELEMENTS TO BE GALVANIZED, UNO.
3. REFER TO SPECIFICATIONS FOR FINISH REQUIREMENTS. ALL EXPOSED WELDS TO BE GROUND SMOOTH.
4. REPAIR ALL DAMAGED COATINGS.

4 STEEL CHANNEL TO CHANNEL
NO SCALE

NO.	BY	CHK	APP	DATE	REVISIONS AND RECORD OF USE
0				5/19/2020	ISSUED FOR CONSTRUCTION

REGISTERED PROFESSIONAL ENGINEER CHARLES R. ASHLEY S5258 STRUCTURAL STATE OF CALIFORNIA

Ashley & Vance ENGINEERING, INC | JOINT VENTURE | BLACK & VEATCH | FILANC

CITY OF MORRO BAY
FILANC BLACK & VEATCH DB PROPOSAL
WATER RECLAMATION FACILITY (WRF)

GENERAL
STRUCTURAL
STANDARD DETAILS

DESIGNED: M. MARSH
DETAILED: S. BENJAMIN
CHECKED: I. SHOEBRIDGE
APPROVED: C. ASHLEY
DATE: 5/19/2020

0 1/2 1
IF THIS BAR DOES NOT MEASURE 1" THEN DRAWING IS NOT TO FULL SCALE

PROJECT NO. 400530

00-S-108
SHEET 161 OF 412

PLOTTED: 5/19/2020 2:45:58 PM
D400530

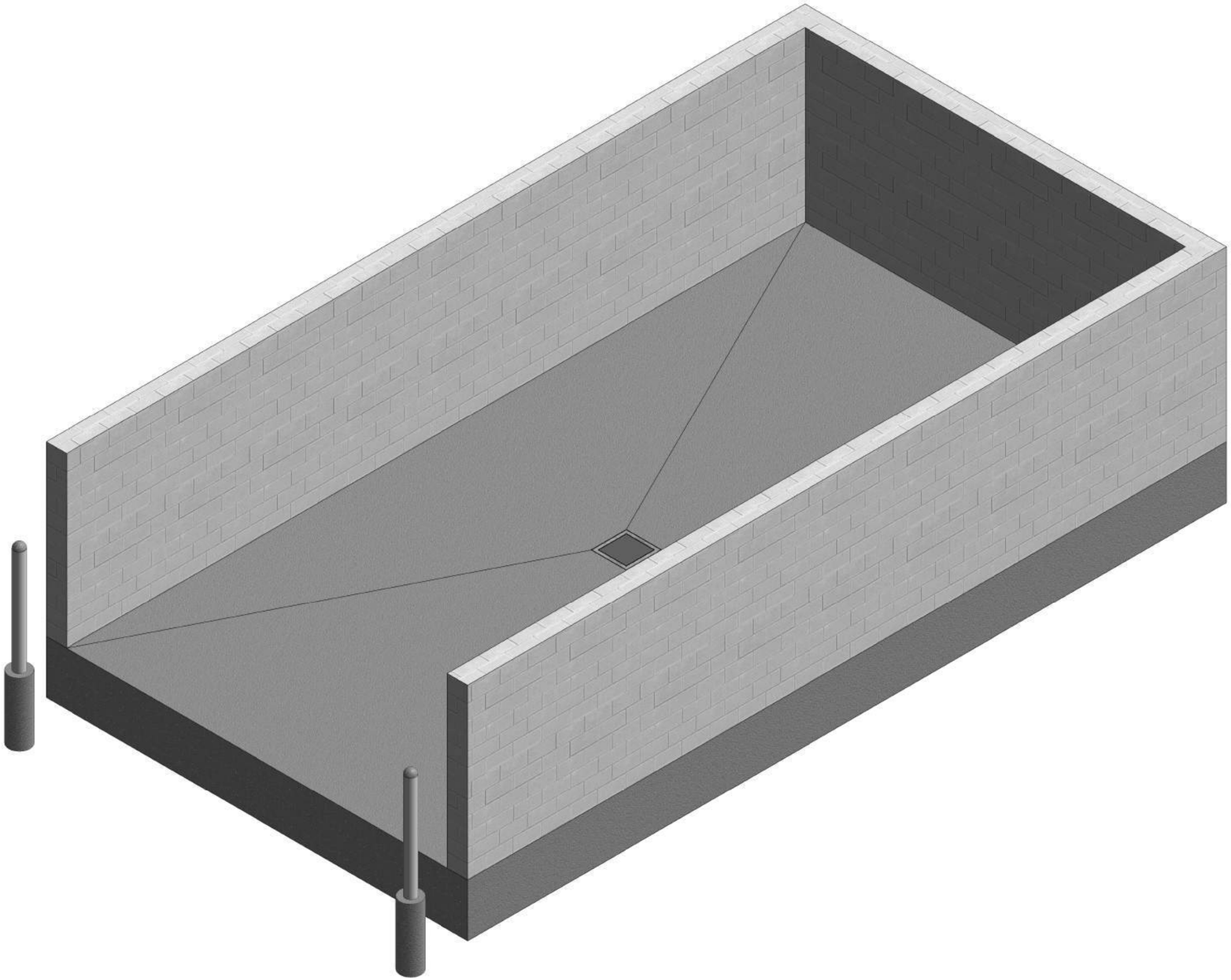

3D VIEW

NO.	BY	CHK	APP	DATE	REVISIONS AND RECORD OF USE
0				5/19/2020	ISSUED FOR CONSTRUCTION

REGISTERED PROFESSIONAL ENGINEER
CHARLES R. ASHLEY
S5258
STRUCTURAL
STATE OF CALIFORNIA

Ashley & Vance ENGINEERING, INC

JOINT VENTURE

BLACK & VEATCH

FILANC

CITY OF MORRO BAY
FILANC BLACK & VEATCH DB PROPOSAL
RECLAMATION FACILITY (WRF)

WASH RACK
STRUCTURAL
3D VIEW

DESIGNED: M. MARSH
DETAILED: S. BENJAMIN
CHECKED: I. SHOEBRIDGE
APPROVED: C. ASHLEY
DATE: 5/19/2020

0 1/2 1
IF THIS BAR DOES NOT MEASURE 1" THEN DRAWING IS NOT TO FULL SCALE

PROJECT NO.
400530

13-S-001
SHEET
162 OF 412

PLOTTED: 5/19/2020 1:43:18 PM
D400530

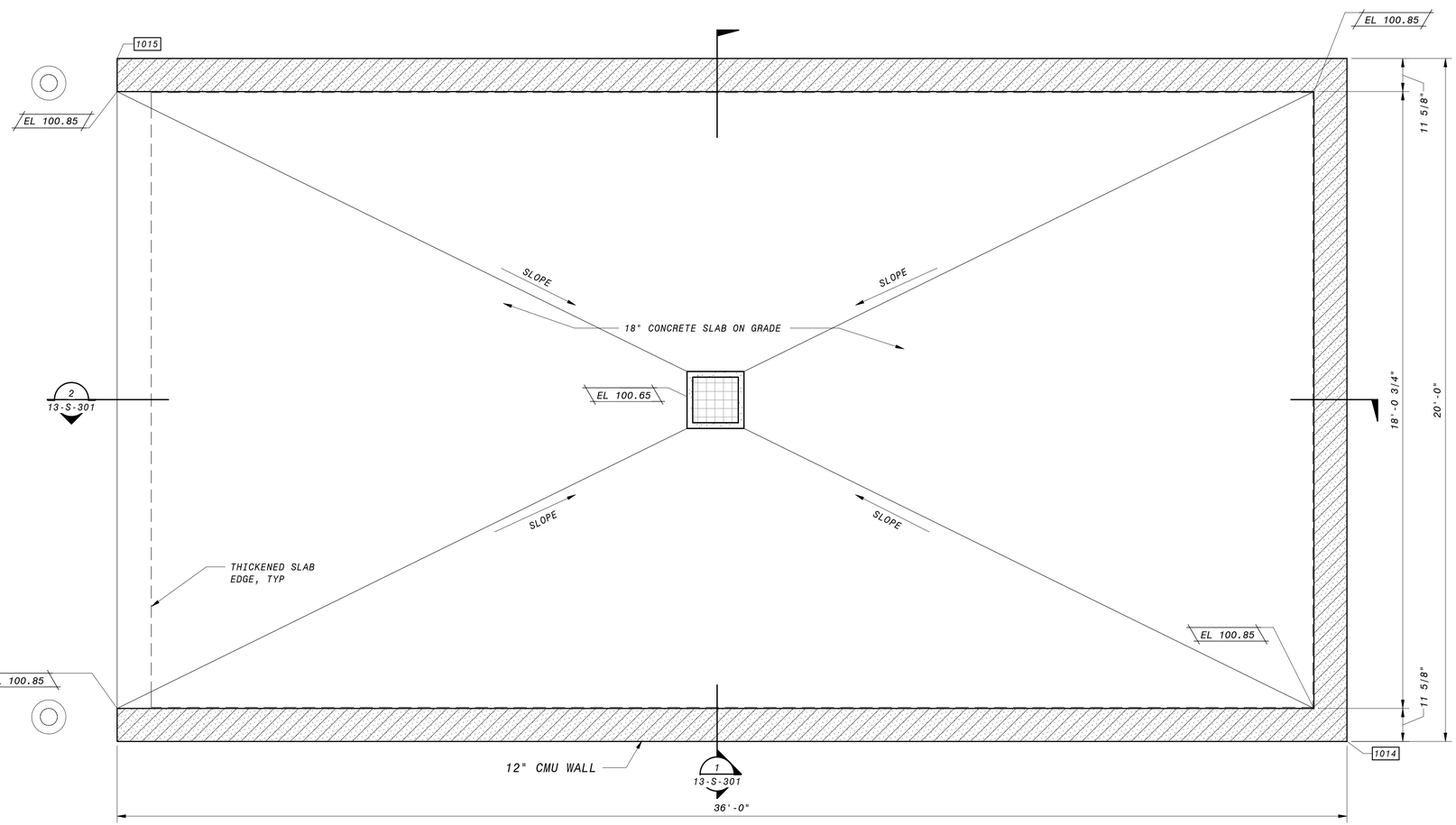

OPERATING FLOOR PLAN

1/2" = 1'-0"

GENERAL FOUNDATION NOTES

1. PLEASE SEE SOILS REPORT FOR ADDITIONAL SPECIFICATIONS AND RECOMMENDATIONS. IT IS THE DESIGN BUILDER'S RESPONSIBILITY TO OBTAIN A COPY OF THE SOILS REPORT FROM THE OWNER OR OWNERS REPRESENTATIVE.
2. NOT USED.
3. FOR GENERAL STRUCTURAL NOTES, SEE SHEETS 00-S-002 AND STAND SPECIFICATIONS.
4. VERIFY ALL DIMENSIONS PRIOR TO COMMENCEMENT OF CONSTRUCTION.
5. ALL LAP SPLICES TO BE CLASS B PER DETAIL 1/00-S-101
6. ALL SLAB REINFORCEMENT MUST TERMINATE WITH A STANDARD 90° HOOK PER DETAIL 5/00-S-101.
7. FOR TYPICAL MAT SLAB EDGE, REFER TO DETAIL 13/00-S-102

12' 6' 0' 1' 2' 3' 4' 5'

1/2" = 1'-0"

NO.	BY	CHK	APP	DATE	REVISIONS AND RECORD OF USE
0				5/19/2020	ISSUED FOR CONSTRUCTION

REGISTERED PROFESSIONAL ENGINEER
CHARLES R. ASHLEY
S5258
STRUCTURAL
STATE OF CALIFORNIA

Ashley&Vance ENGINEERING, INC
JOINT VENTURE
BLACK & VEATCH
FILANC

CITY OF MORRO BAY
FILANC BLACK & VEATCH DB PROPOSAL
RECLAMATION FACILITY (WRF)

WASH RACK
STRUCTURAL
OPERATING LEVEL PLAN

DESIGNED: M. MARSH
DETAILED: S. BENJAMIN
CHECKED: I. SHOEBRIDGE
APPROVED: C. ASHLEY
DATE: 5/19/2020

0 1/2 1

IF THIS BAR DOES NOT MEASURE 1" THEN DRAWING IS NOT TO FULL SCALE

PROJECT NO.
400530

13-S-101
SHEET
163 OF 412

PLOTTED: 5/19/2020 1:43:18 PM
D400530

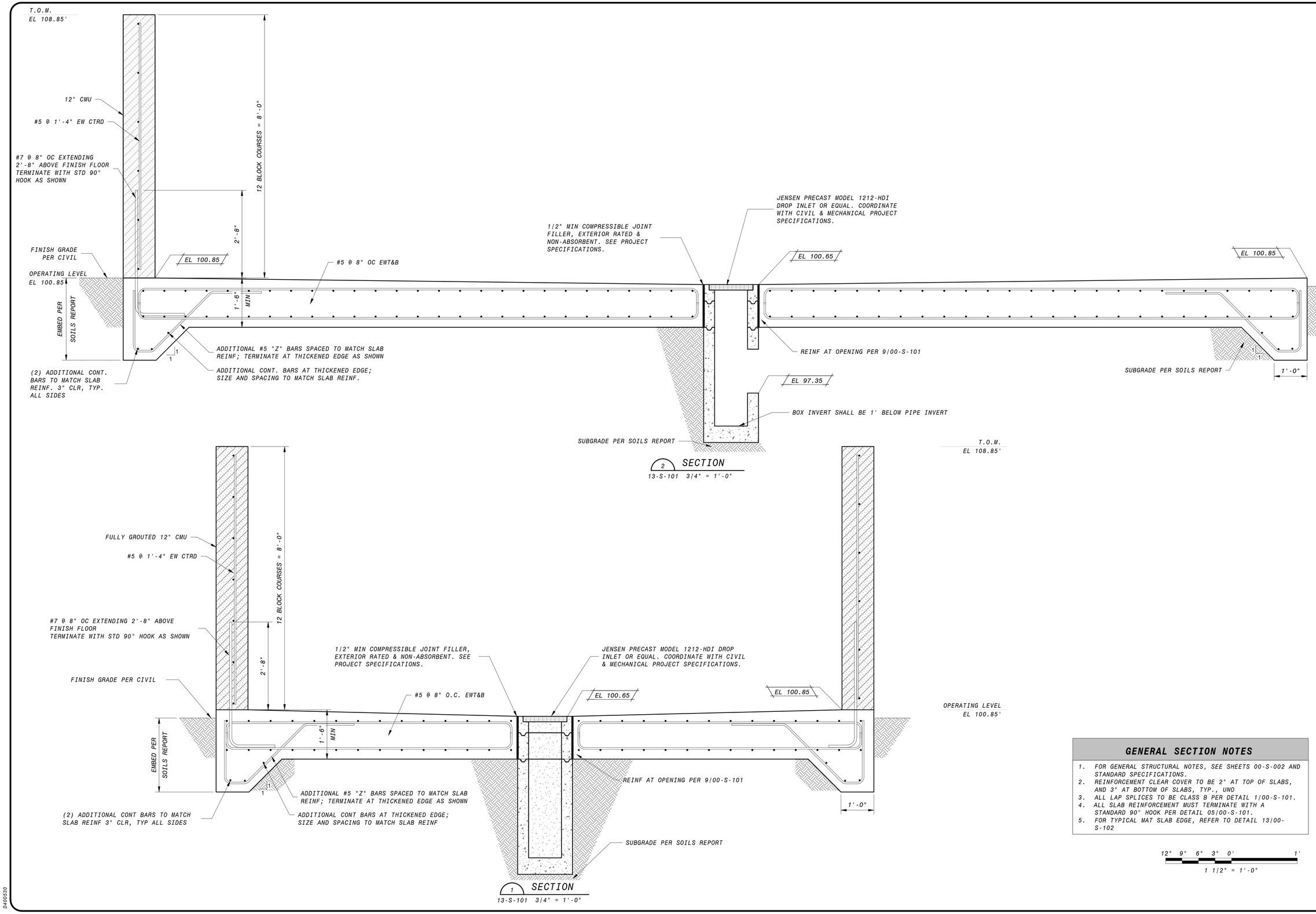

GENERAL SECTION NOTES

1. FOR GENERAL STRUCTURAL NOTES, SEE SHEETS 00-S-002 AND STANDARD SPECIFICATIONS.
2. REINFORCEMENT CLEAR COVER TO BE 2" AT TOP OF SLABS, AND 3" AT BOTTOM OF SLABS, TYP., UNO
3. ALL LAP SPLICES TO BE CLASS B PER DETAIL 1/00-S-101.
4. ALL SLAB REINFORCEMENT MUST TERMINATE WITH A STANDARD 90° HOOK PER DETAIL 05/00-S-101.
5. FOR TYPICAL MAT SLAB EDGE, REFER TO DETAIL 13/00-S-102

12" 9" 6" 3" 0' 1'

1 1/2" = 1'-0"

NO.	BY	CHK	APP	DATE	REVISIONS AND RECORD OF USE
0				5/19/2020	ISSUED FOR CONSTRUCTION

REGISTERED PROFESSIONAL ENGINEER
CHARLES R. ASHLEY
S5258
STRUCTURAL
STATE OF CALIFORNIA

Ashley&Vance ENGINEERING, INC

JOINT VENTURE

BLACK & VEATCH

FILANC

CITY OF MORRO BAY
FILANC BLACK & VEATCH DB PROPOSAL
RECLAMATION FACILITY (WRF)

WASH RACK
STRUCTURAL
SECTIONS

DESIGNED: M. MARSH
DETAILED: S. BENJAMIN
CHECKED: I. SHOEBRIDGE
APPROVED: C. ASHLEY
DATE: 5/19/2020

0 1/2 1
IF THIS BAR DOES NOT MEASURE 1" THEN DRAWING IS NOT TO FULL SCALE

PROJECT NO.
400530

13-S-301
SHEET
164 OF 412

PLOTTED: 5/19/2020 1:43:19 PM
D400530

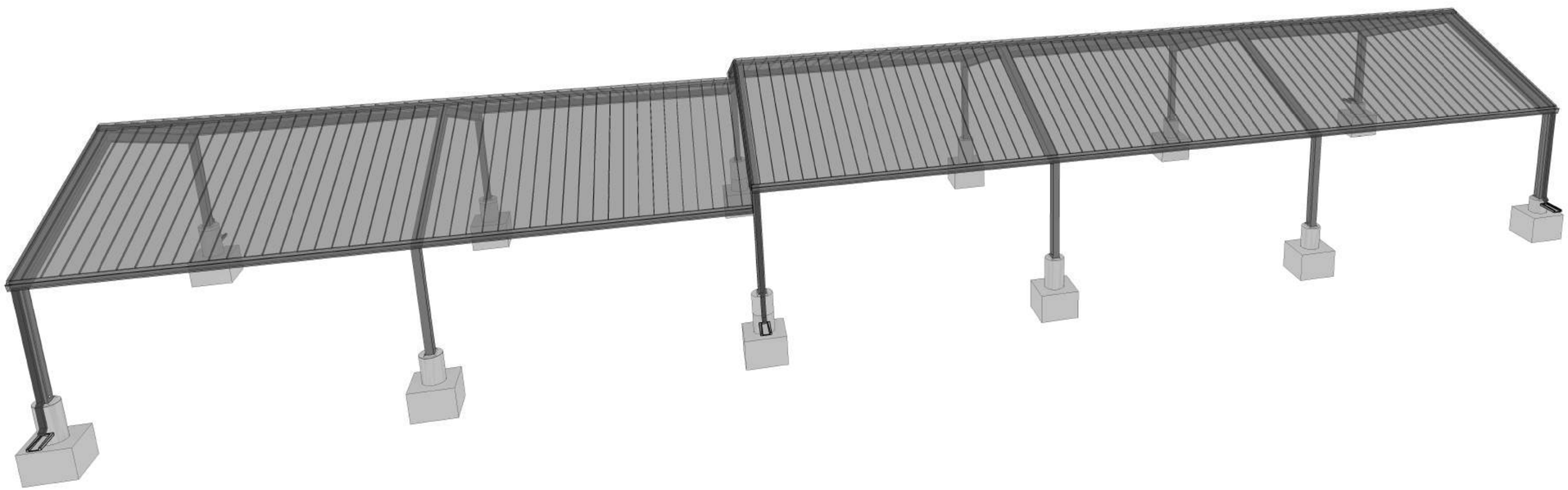

3D VIEW - SOUTHEAST

NO SCALE

NO.	BY	CHK	APP
0	EVB	BDF	EVB

DATE	REVISIONS AND RECORD OF USE
5/19/2020	ISSUED FOR CONSTRUCTION

REGISTERED PROFESSIONAL ENGINEER
CHARLES R. ASHLEY
S5258
STRUCTURAL
STATE OF CALIFORNIA

Ashley&Vance ENGINEERING, INC
JOINT VENTURE
FILANC
BLACK & VEATCH

CITY OF MORRO BAY
MORRO BAY WATER
RECLAMATION FACILITY (WRF)

WRF PARKING CANOPY
STRUCTURAL
3D VIEW

DESIGNED: C. TAYLOR
DETAILED: S. BENJAMIN
CHECKED: I. SHOEBRIDGE
APPROVED: C. ASHLEY
DATE: 5/19/2020

0 1/2 1
IF THIS BAR DOES NOT MEASURE 1" THEN DRAWING IS NOT TO FULL SCALE

PROJECT NO.
400530

14-S-001
SHEET
165 OF 412

PLOTTED: 5/19/2020 1:49:32 PM
D400530

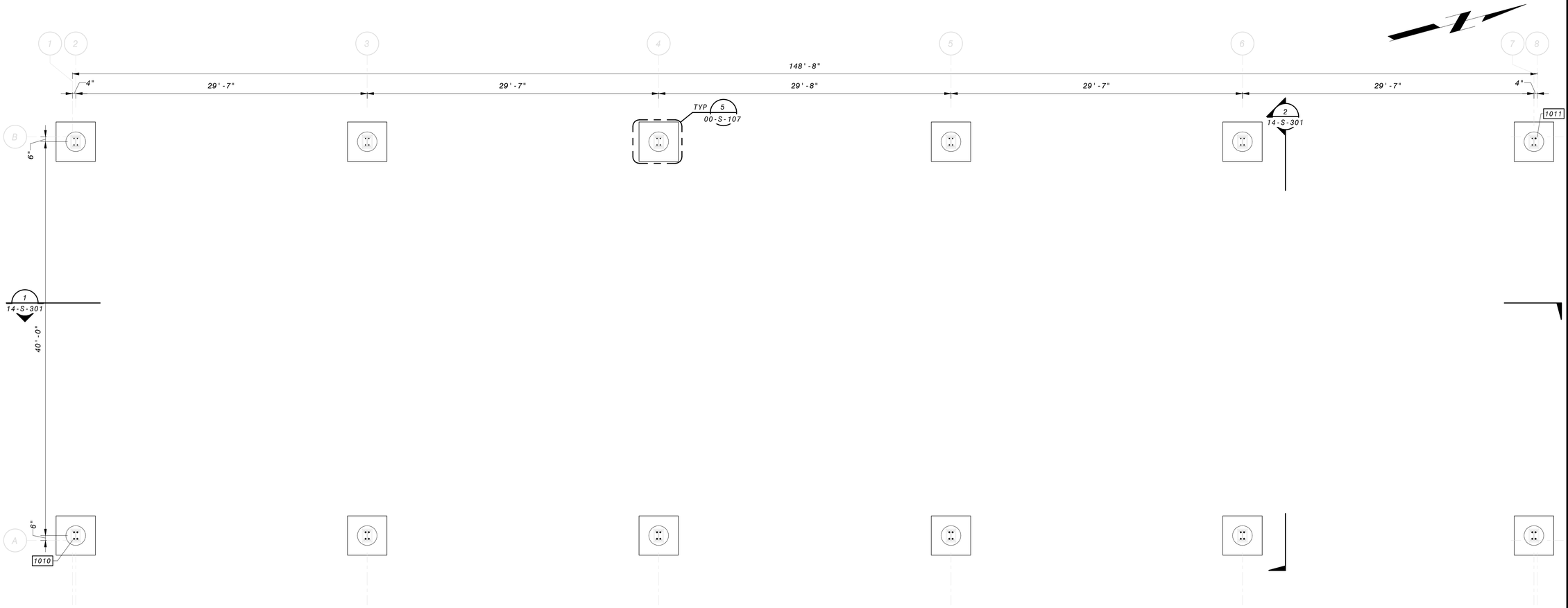

PLAN

3/16" = 1'-0"

NOTES:

1. DESIGN AND DRAWINGS FOR STEEL FRAME PRE-ENGINEERED METAL BUILDING TO BE PROVIDED BY BUILDING MFR. SEE SPECIFICATIONS FOR DESIGN CRITERIA.
2. FOUNDATION DESIGN HAS BEEN BASED ON THE FOLLOWING FRAME REACTIONS, ASSUMING A PINNED COLUMN BASE:
3. FRAME REACTIONS INCLUDE BOTH PRINCIPLE DIRECTIONS AND ORTHOGONAL COMBINATION EFFECTS.

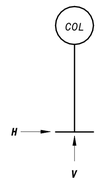

LOAD	VERTICAL V (K)	HORIZONTAL H (K)
DEAD	3.4	0.5
ROOF LIVE	7.7	1.0
SEISMIC	2.0	0.75
WIND (MAX)	10.5	2.5
WIND (MIN)	-10.5	-2.5

GENERAL FOUNDATION NOTES

1. PLEASE SEE SOILS REPORT FOR ADDITIONAL SPECIFICATIONS AND RECOMMENDATIONS. IT IS THE DESIGN BUILDER'S RESPONSIBILITY TO OBTAIN A COPY OF THE SOILS REPORT FROM THE OWNER OR OWNERS REPRESENTATIVE.
2. NOT USED.
3. FOR GENERAL STRUCTURAL NOTES, SEE SHEETS 00-S-002 AND STANDARD SPECIFICATIONS.
4. VERIFY ALL DIMENSIONS PRIOR TO COMMENCEMENT OF CONSTRUCTION.
5. ALL LAP SPLICES TO BE CLASS B PER DETAIL 1/00-S-101
6. COORDINATE COLUMN SIZE, LOCATION, AND ATTACHMENT WITH BUILDING MANUFACTURER PRIOR TO INSTALLATION.

6" 4' 2' 0' 5' 10'

3/16" = 1'-0"

NO.	BY	CHK	APP	DATE	REVISIONS AND RECORD OF USE
0				5/19/2020	ISSUED FOR CONSTRUCTION

REGISTERED PROFESSIONAL ENGINEER
CHARLES R. ASHLEY
S5258
STRUCTURAL
STATE OF CALIFORNIA

Ashley & Vance ENGINEERING, INC
JOINT VENTURE
BLACK & VEATCH
FILANC

CITY OF MORRO BAY
MORRO BAY WATER RECLAMATION FACILITY (WRF)

WRF PARKING CANOPY
STRUCTURAL PLAN

DESIGNED: C. TAYLOR
DETAILED: S. BENJAMIN
CHECKED: I. SHOEBRIDGE
APPROVED: C. ASHLEY
DATE: 5/19/2020

0 1/2 1
IF THIS BAR DOES NOT MEASURE 1" THEN DRAWING IS NOT TO FULL SCALE

PROJECT NO.
400530

14-S-101
SHEET
166 OF 412

PLOTTED: 5/19/2020 1:49:52 PM
D400530

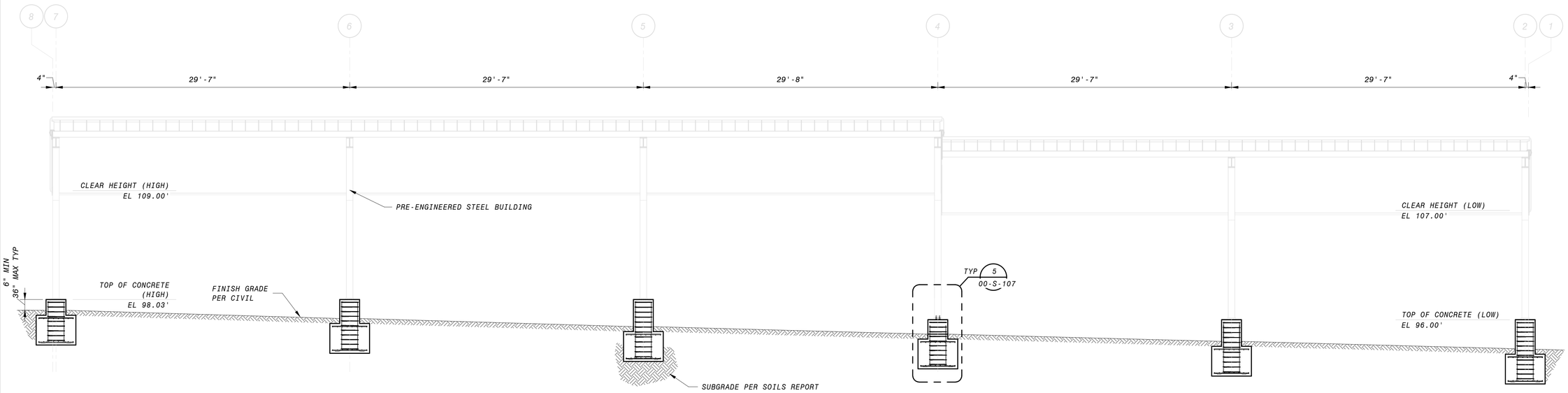

1 SECTION
14-S-101 3/16" = 1'-0"

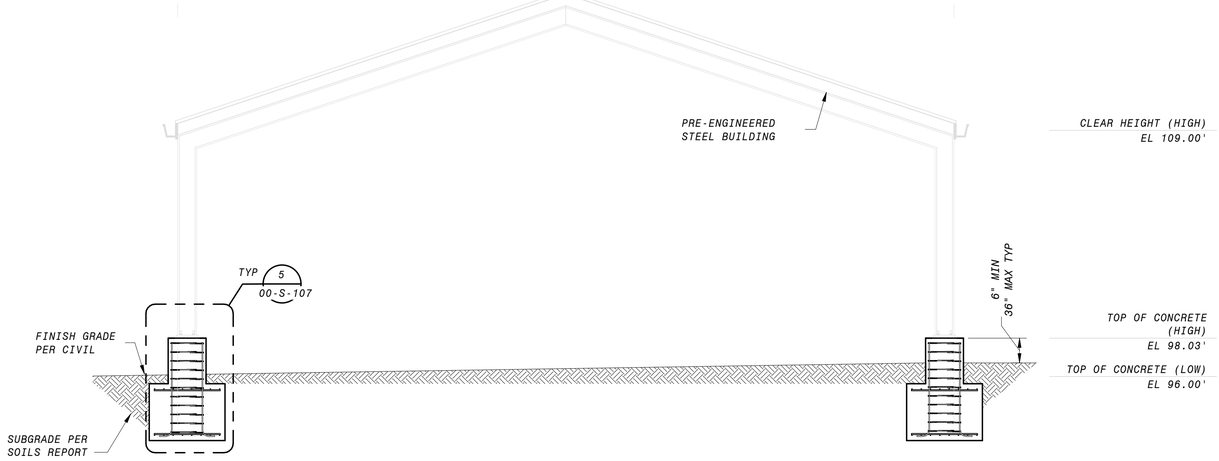

2 SECTION
14-S-101 1/4" = 1'-0"

GENERAL SECTION NOTES

1. FOR GENERAL STRUCTURAL NOTES, SEE SHEETS 00-S-002 AND STANDARD SPECIFICATIONS.
2. REINFORCEMENT CLEAR COVER TO BE 3" TYP., UNO
3. ALL LAP SPLICES TO BE CLASS B PER DETAIL 1/00-S-101.

6" 4' 2' 0' 5' 10'
3/16" = 1'-0"

4' 2' 0' 4' 8'
1/4" = 1'-0"

NO.	BY	CHK	APP	DATE	REVISIONS AND RECORD OF USE
0				5/19/2020	ISSUED FOR CONSTRUCTION

REGISTERED PROFESSIONAL ENGINEER
CHARLES R. ASHLEY
S5258
STRUCTURAL
STATE OF CALIFORNIA

Ashley&Vance ENGINEERING, INC
JOINT VENTURE
BLACK&VEATCH
FILANC

CITY OF MORRO BAY
MORRO BAY WATER
RECLAMATION FACILITY (WRF)

WRF PARKING CANOPY
STRUCTURAL
SECTIONS

DESIGNED: C. TAYLOR
DETAILED: S. BENJAMIN
CHECKED: I. SHOEBRIDGE
APPROVED: C. ASHLEY
DATE: 5/19/2020

0 1/2 1
IF THIS BAR DOES NOT MEASURE 1" THEN DRAWING IS NOT TO FULL SCALE

PROJECT NO.
400530

14-S-301
SHEET
167 OF 412

PLOTTED: 5/19/2020 1:49:55 PM
D400530

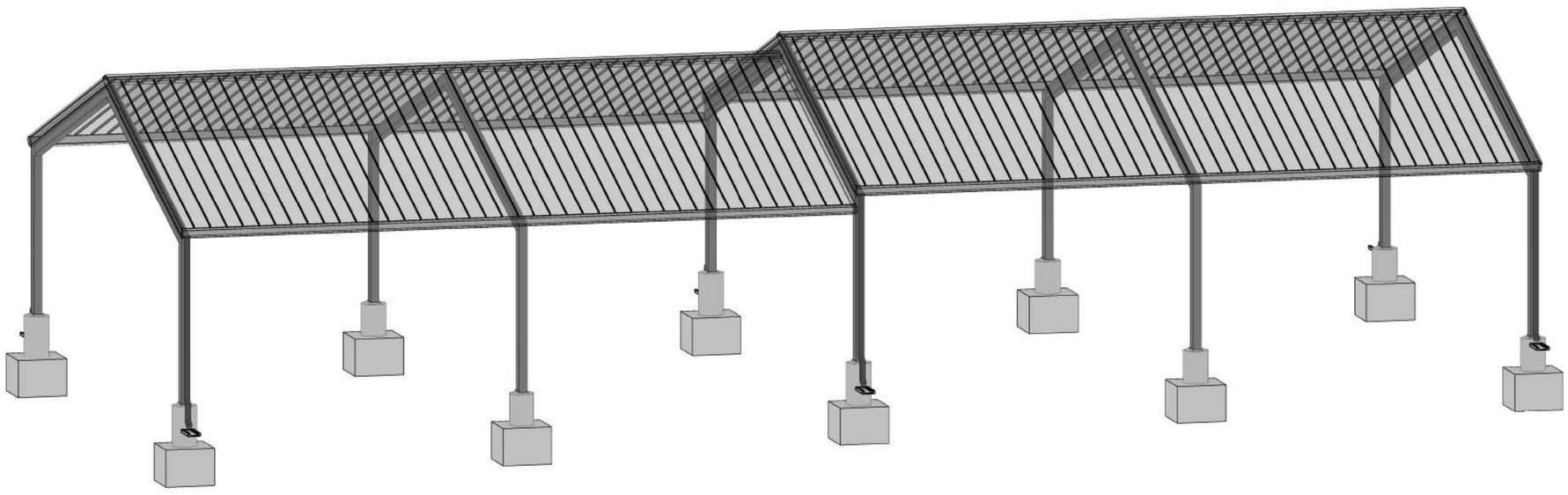

WRF EQUIPMENT STORAGE CANOPY

3D VIEW - SOUTHEAST

NO SCALE

NO.	BY	CHK	APP	DATE	REVISIONS AND RECORD OF USE
0				5/19/2020	ISSUED FOR CONSTRUCTION

REGISTERED PROFESSIONAL ENGINEER
CHARLES R. ASHLEY
C 55258
STRUCTURAL
STATE OF CALIFORNIA

Ashley&Vance ENGINEERING, INC

JOINT VENTURE

BLACK & VEATCH

FILANC

CITY OF MORRO BAY
FILANC BLACK & VEATCH DB PROPOSAL
MORRO BAY WRF

WATER AND COLLECTION VEHICLES EQUIPMENT STORAGE
STRUCTURAL
3D VIEW

DESIGNED: C. TAYLOR
DETAILED: S. BENJAMIN
CHECKED: I. SHOEBRIDGE
APPROVED: C. ASHLEY
DATE: 5/19/2020

0 1/2 1
IF THIS BAR DOES NOT MEASURE 1" THEN DRAWING IS NOT TO FULL SCALE

PROJECT NO.
400530

15-S-001
SHEET
168 OF 412

PLOTTED: 5/19/2020 1:52:29 PM
D400530

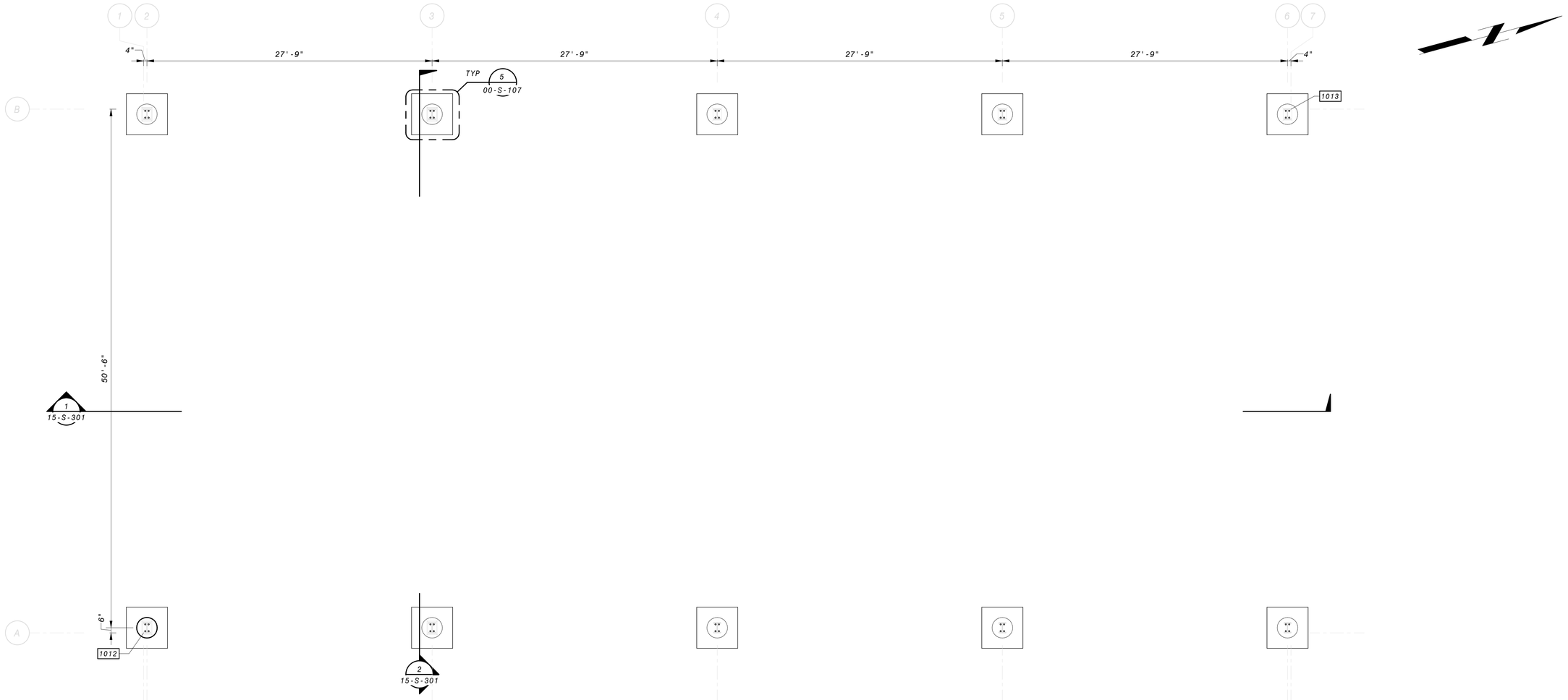

PLAN

3/16" = 1'-0"

NOTES:

1. DESIGN AND DRAWINGS FOR STEEL FRAME PRE-ENGINEERED METAL BUILDING TO BE PROVIDED BY BUILDING MFR. SEE SPECIFICATIONS FOR DESIGN CRITERIA.
2. FOUNDATION DESIGN HAS BEEN BASED ON THE FOLLOWING FRAME REACTIONS, ASSUMING A PINNED COLUMN BASE:
3. FRAME REACTIONS INCLUDE BOTH PRINCIPLE DIRECTIONS AND ORTHOGONAL COMBINATION EFFECTS.

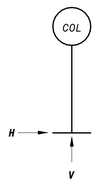

LOAD	VERTICAL V (K)	HORIZONTAL H (K)
DEAD	3.4	0.5
ROOF LIVE	7.7	1.0
SEISMIC	2.0	0.75
WIND (MAX)	10.5	2.5
WIND (MIN)	-10.5	-2.5

GENERAL FOUNDATION NOTES

1. PLEASE SEE SOILS REPORT FOR ADDITIONAL SPECIFICATIONS AND RECOMMENDATIONS. IT IS THE DESIGN BUILDER'S RESPONSIBILITY TO OBTAIN A COPY OF THE SOILS REPORT FROM THE OWNER OR OWNERS REPRESENTATIVE.
2. NOT USED
3. FOR GENERAL STRUCTURAL NOTES, SEE SHEETS 00-S-002 AND STANDARD SPECIFICATIONS.
4. VERIFY ALL DIMENSIONS PRIOR TO COMMENCEMENT OF CONSTRUCTION.
5. ALL LAP SPLICES TO BE CLASS B PER DETAIL 1/00-S-101
6. COORDINATE COLUMN SIZE, LOCATION, AND ATTACHMENT WITH BUIDLING MANUFACTURER PRIOR TO INSTALLATION.

6" 4' 2' 0' 5' 10'

3/16" = 1'-0"

NO.	BY	CHK	APP	DATE	REVISIONS AND RECORD OF USE
0				5/19/2020	ISSUED FOR CONSTRUCTION

REGISTERED PROFESSIONAL ENGINEER
CHARLES R. ASHLEY
C5258
STRUCTURAL
STATE OF CALIFORNIA

Ashley & Vance ENGINEERING, INC
JOINT VENTURE
BLACK & VEATCH
FILANC

CITY OF MORRO BAY
FILANC BLACK & VEATCH DB PROPOSAL
MORRO BAY WRF

WATER AND COLLECTION VEHICLES EQUIPMENT STORAGE
STRUCTURAL PLAN

DESIGNED: C. TAYLOR
DETAILED: S. BENJAMIN
CHECKED: I. SHOEBRIDGE
APPROVED: C. ASHLEY
DATE: 5/19/2020

0 1/2 1
IF THIS BAR DOES NOT MEASURE 1" THEN DRAWING IS NOT TO FULL SCALE

PROJECT NO.
400530

15-S-101
SHEET
169 OF 412

PLOTTED: 5/19/2020 1:52:30 PM
D400530

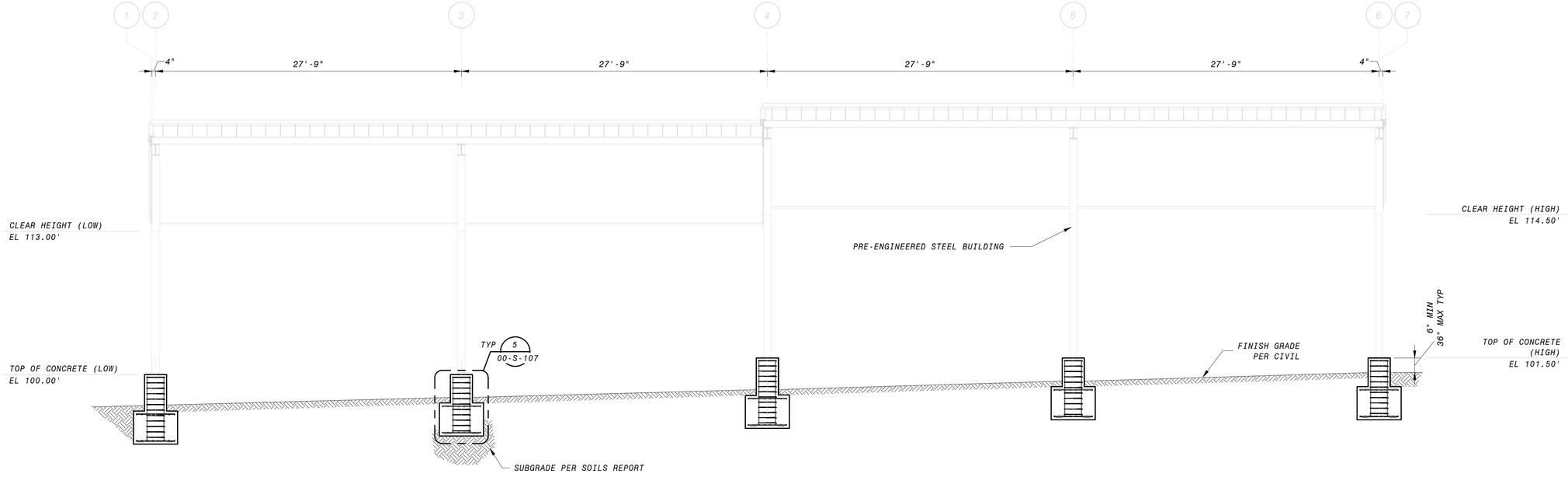

1 SECTION
15-S-101 3/16" = 1'-0"

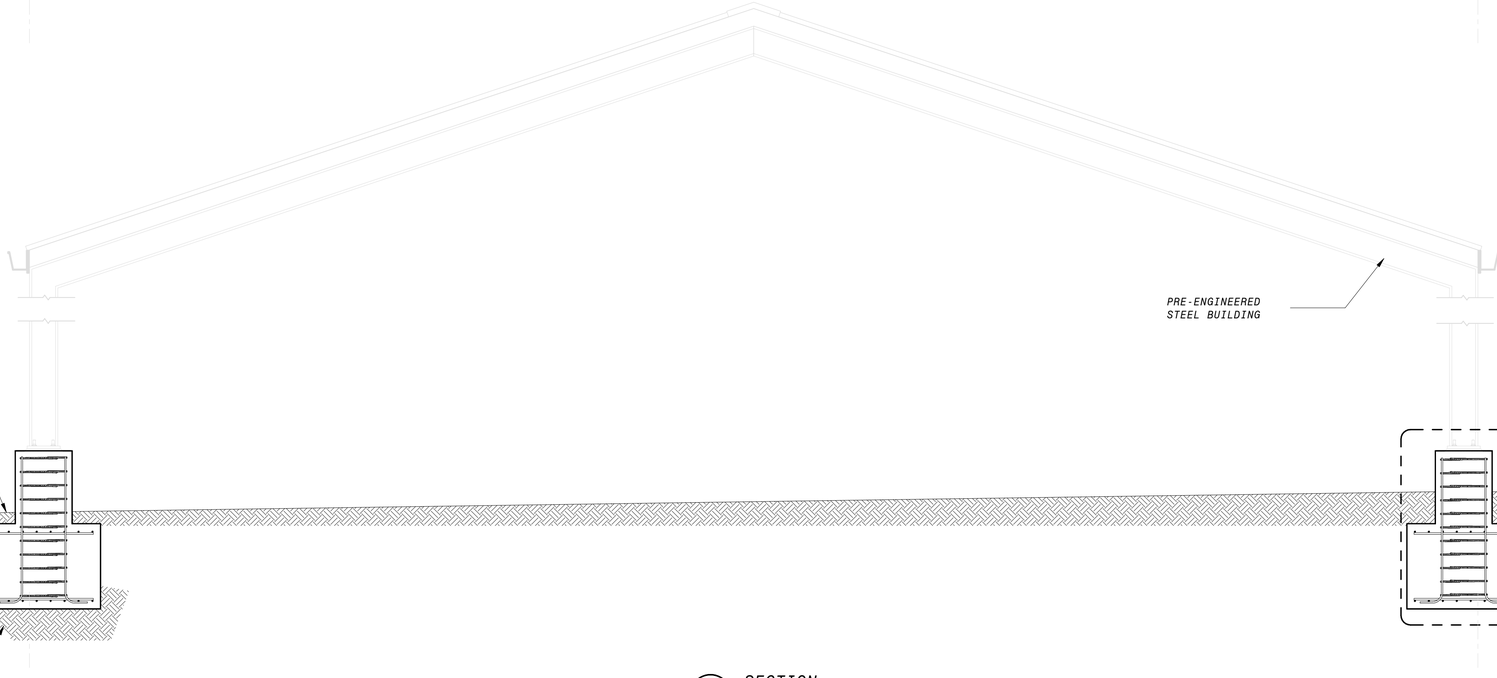

2 SECTION
15-S-101 3/8" = 1'-0"

GENERAL SECTION NOTES

1. FOR GENERAL STRUCTURAL NOTES, SEE SHEETS 00-S-002 AND STANDARD SPECIFICATIONS.
2. REINFORCEMENT CLEAR COVER TO BE 3" TYP., UNO
3. ALL LAP SPLICES TO BE CLASS B PER DETAIL 1/00-S-101.

6" 4' 2' 0' 5' 10'
3/16" = 1'-0"

12" 0' 1' 2' 3' 4' 5' 6' 7'
3/8" = 1'-0"

NO.	BY	CHK	APP	DATE	REVISIONS AND RECORD OF USE
0				5/19/2020	ISSUED FOR CONSTRUCTION

REGISTERED PROFESSIONAL ENGINEER
CHARLES R. ASHLEY
C.R. Ashley
55258
STRUCTURAL
STATE OF CALIFORNIA

Ashley&Vance ENGINEERING, INC
JOINT VENTURE
BLACK&VEATCH
FILANC

CITY OF MORRO BAY
FILANC BLACK & VEATCH DB PROPOSAL
MORRO BAY WRF

WATER AND COLLECTION VEHICLES EQUIPMENT STORAGE
STRUCTURAL SECTIONS

DESIGNED: C. TAYLOR
DETAILED: S. BENJAMIN
CHECKED: I. SHOEBRIDGE
APPROVED: C. ASHLEY
DATE: 5/19/2020

0 1/2 1
IF THIS BAR DOES NOT MEASURE 1" THEN DRAWING IS NOT TO FULL SCALE

PROJECT NO.
400530

15-S-301
SHEET
170 OF 412

PLOTTED: 5/19/2020 1:52:32 PM
D400530

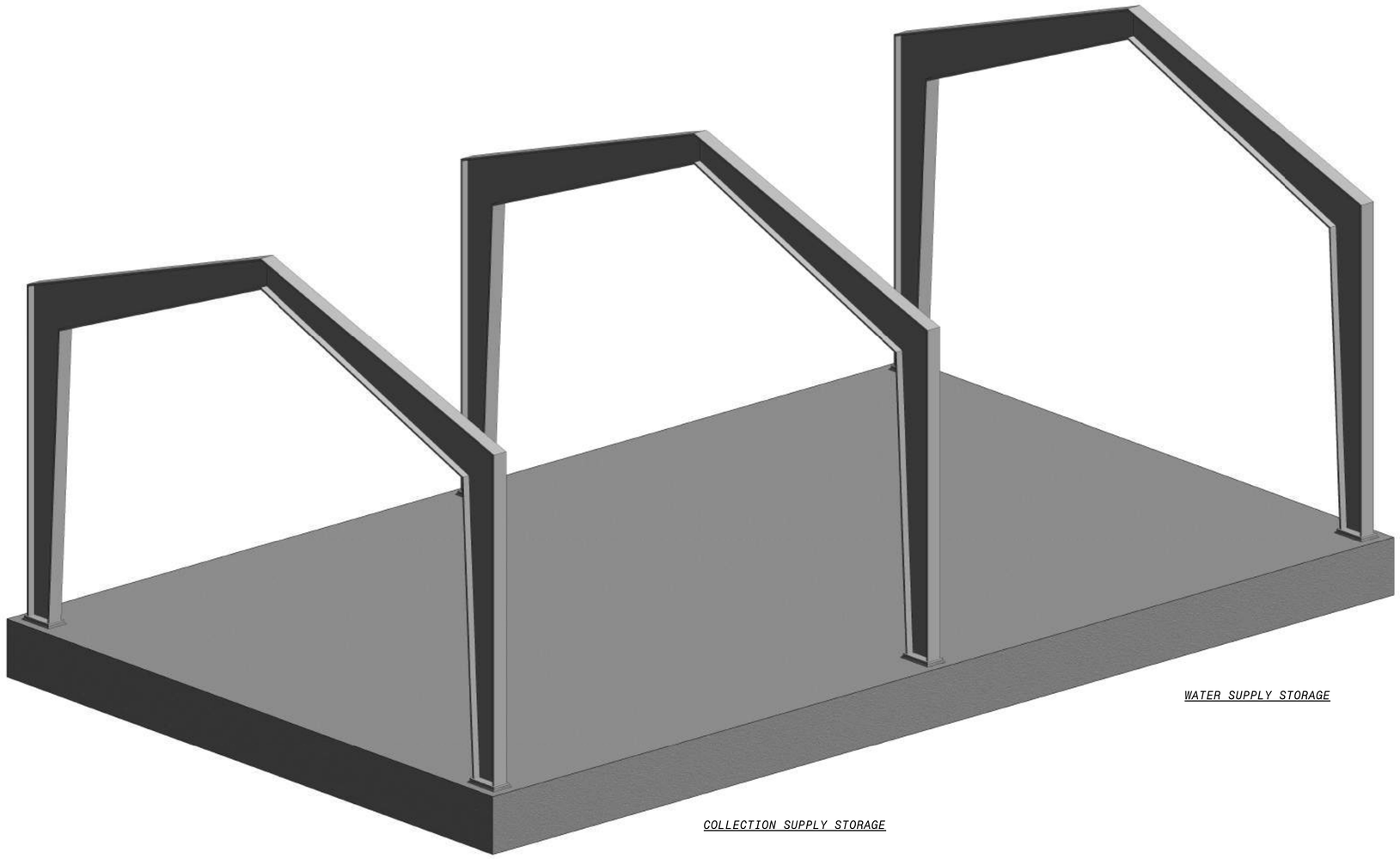

WATER SUPPLY STORAGE

COLLECTION SUPPLY STORAGE

3D VIEW - NORTHEAST

NO SCALE

NO.	BY	CHK	APP	DATE	REVISIONS AND RECORD OF USE
0				5/19/2020	ISSUED FOR CONSTRUCTION
A	EVB	BDF	EVB	3/5/2019	30% SUBMITTAL

REGISTERED PROFESSIONAL ENGINEER
CHARLES R. ASHLEY
S5258
STRUCTURAL
STATE OF CALIFORNIA

Ashley&Vance ENGINEERING, INC

JOINT VENTURE

BLACK & VEATCH

FILANC

CITY OF MORRO BAY
MORRO BAY WATER
RECLAMATION FACILITY (WRF)

WATER AND COLLECTION SUPPLIES STORAGE SHEDS
STRUCTURAL
3D VIEW

DESIGNED: M. MARSH
DETAILED: S. BENJAMIN
CHECKED: I. SHOEBRIDGE
APPROVED: C. ASHLEY
DATE: 5/19/2020

0 1/2 1

IF THIS BAR DOES NOT MEASURE 1" THEN DRAWING IS NOT TO FULL SCALE

PROJECT NO.
400530

16-S-001

SHEET
171 OF 412

PLOTTED: 5/19/2020 1:56:02 PM
D400530

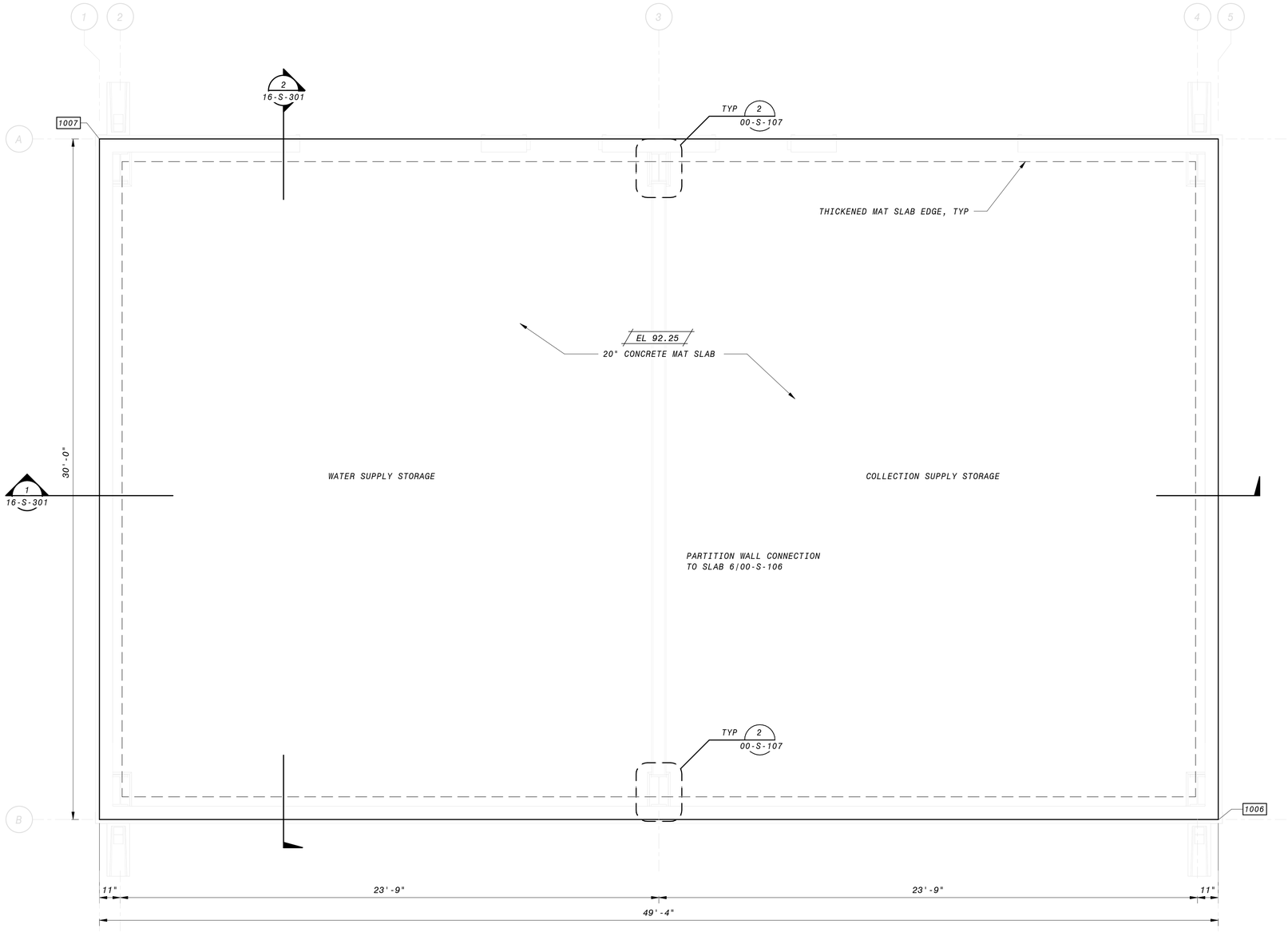

OPERATING FLOOR PLAN

3/8" = 1'-0"

GENERAL FOUNDATION NOTES

1. PLEASE SEE SOILS REPORT FOR ADDITIONAL SPECIFICATIONS AND RECOMMENDATIONS. IT IS THE DESIGN BUILDER'S RESPONSIBILITY TO OBTAIN A COPY OF THE SOILS REPORT FROM THE OWNER OR OWNERS REPRESENTATIVE.
2. NOT USED.
3. FOR GENERAL STRUCTURAL NOTES, SEE SHEETS 00-S-002 AND STANDARD SPECIFICATIONS.
4. VERIFY ALL DIMENSIONS PRIOR TO COMMENCEMENT OF CONSTRUCTION.
5. OUTSIDE LAYER OF MAT SLAB REINFORCEMENT TO BE PLACED IN THE SHORT DIRECTION. INSIDE LAYER OF MAT SLAB REINFORCEMENT TO BE PLACED IN THE LONG DIRECTION. TYPICAL, UNLESS NOTED OTHERWISE.
6. ALL LAP SPLICES TO BE CLASS B PER DETAIL 1/00-S-101
7. REFER TO MECHANICAL/ELECTRICAL/PLUMBING DRAWINGS FOR SIZE AND LOCATIONS OF PIPE PENETRATIONS AND SLAB OPENINGS. SEE DETAIL 9/00-S-101 FOR TYPICAL REINFORCEMENT REQUIREMENTS. COORDINATE PIPE PENETRATION SEAL WITH MECHANICAL ENGINEER OF RECORD.
8. ALL SLAB REINFORCEMENT MUST TERMINATE WITH A STANDARD 90° HOOK PER DETAIL 5/00-S-101.
9. FOR TYPICAL MAT SLAB EDGE, REFER TO DETAIL 13/00-S-102.
10. COORDINATE LOCATION AND DETAILING FOR ATTACHMENT OF MECHANICAL SUPPORTS WITH BUILDING MANUFACTURER AND MECHANICAL ENGINEER OF RECORD PRIOR TO INSTALLATION.
11. COORDINATE ALL INTERIOR WALLS WITH ARCHITECTURAL DRAWINGS. SEE SHEET 00-S-106 AND PROJECT SPECIFICATIONS FOR ADDITIONAL INFORMATION
12. COORDINATE COLUMN SIZE, LOCATION, AND ATTACHMENT WITH BUILDING MANUFACTURER PRIOR TO INSTALLATION.
13. SEE DETAIL 2/00-S-102 FOR TYP MAT SLAB ON GRADE.

NOTES:

1. DESIGN AND DRAWINGS FPR STEEL FRAME PRE-ENGINEERED METAL BUILDING TO BE PROVIDED BY BUILDING MFR. SEE SPECIFICATIONS FOR DESIGN CRITERIA.
2. FOUNDATION DESIGN HAS BEEN BASED ON THE FOLLOWING FRAME REACTIONS, ASSUMING A PINNED COLUMN BASE:

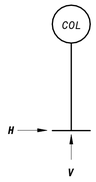

LOAD	VERTICAL V (K)	HORIZONTAL H (K)
DEAD	3.5	0.5
ROOF LIVE	6.5	1.5
SEISMIC	5.0	5.0
WIND (MAX)	7.0	13.5
WIND (MIN)	-14.5	4.0

3. FOUNDATION HAS BEEN DESIGNED FOR A LIVE LOAD OF 250 PSF.
4. FRAME REACTIONS INCLUDE BOTH PRINCIPLE DIRECTIONS AND ORTHOGONAL COMBINATION EFFECTS.

12" 0' 1' 2' 3' 4' 5' 6' 7'

3/8" = 1'-0"

NO.	BY	CHK	APP	DATE	REVISIONS AND RECORD OF USE
0				5/19/2020	ISSUED FOR CONSTRUCTION

REGISTERED PROFESSIONAL ENGINEER
CHARLES R. ASHLEY
S5258
STRUCTURAL
STATE OF CALIFORNIA

Ashley&Vance ENGINEERING, INC
JOINT VENTURE
BLACK&VEATCH
FILANC

CITY OF MORRO BAY
MORRO BAY WATER
RECLAMATION FACILITY (WRF)

WATER AND COLLECTION SUPPLIES STORAGE SHEDS
STRUCTURAL
FOUNDATION PLAN

DESIGNED: M. MARSH
DETAILED: S. BENJAMIN
CHECKED: I. SHOEBRIDGE
APPROVED: C. ASHLEY
DATE: 5/19/2020

0 1/2 1
IF THIS BAR DOES NOT MEASURE 1" THEN DRAWING IS NOT TO FULL SCALE

PROJECT NO.
400530

16-S-101
SHEET
172 OF 412

PLOTTED: 5/19/2020 1:56:02 PM
D400530

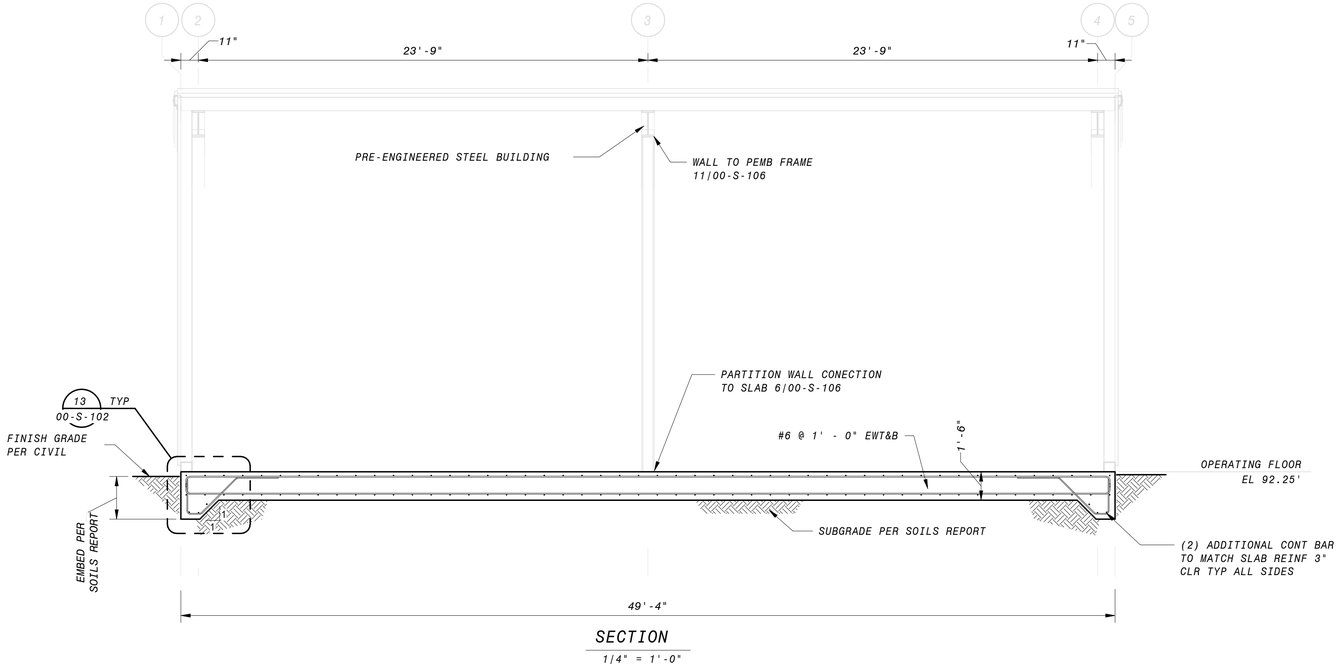

SECTION

1/4" = 1'-0"

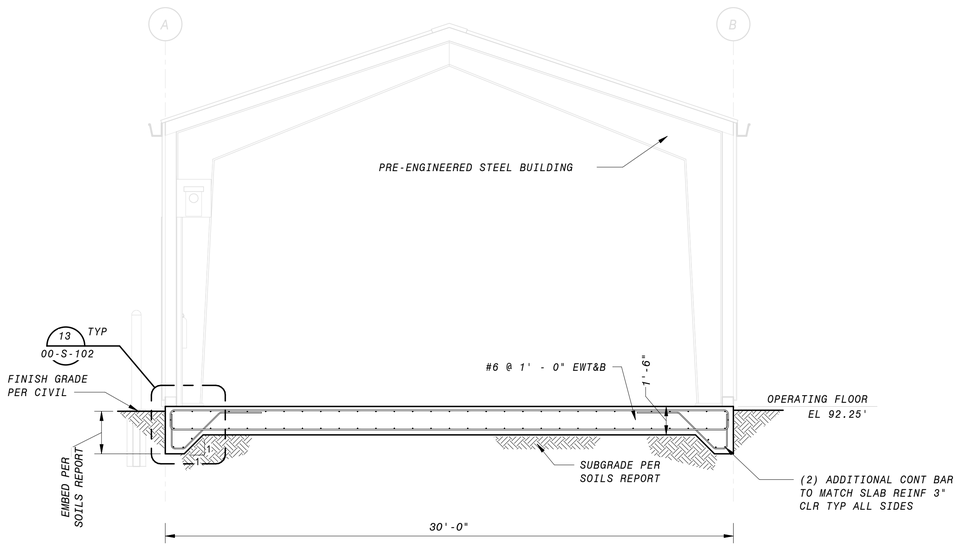

SECTION

1/4" = 1'-0"

GENERAL SECTION NOTES

1. FOR GENERAL STRUCTURAL NOTES, SEE SHEETS 00-S-002 AND STANDARD SPECIFICATIONS.
2. REINFORCEMENT CLEAR COVER TO BE 2" EF FOR WALLS, 2" AT TOP OF SLABS, AND 3" AT BOTTOM OF SLABS, TYP., UNO
3. ALL LAP SPLICES TO BE CLASS B PER DETAIL 1/00-S-101.
4. REFER TO MECHANICAL DRAWINGS FOR SIZE AND LOCATIONS OF PIPE PENETRATIONS AND SLAB OPENINGS. SEE DETAIL 9/00-S-101 FOR TYPICAL REINFORCEMENT REQUIREMENTS. COORDINATE PIPE PENETRATION SEAL WITH MECHANICAL EOR (WHERE OCCURS).
5. ALL SLAB REINFORCEMENT MUST TERMINATE WITH A STANDARD 90° HOOK PER DETAIL 05/00-S-101.
6. COORDINATE LOCATION AND DETAILING FOR ATTACHMENT OF MECHANICAL SUPPORTS WITH BUILDING MANUFACTURER AND MECHANICAL ENGINEER OF RECORD PRIOR TO INSTALLATION.
7. COORDINATE ALL INTERIOR WALLS WITH ARCHITECTURAL DRAWINGS. SEE SHEET 00-S-106 AND PROJECT SPECIFICATIONS FOR ADDITIONAL INFORMATION

4' 2' 0' 4' 8'

1/4" = 1'-0"

NO.	BY	CHK	APP	DATE	REVISIONS AND RECORD OF USE
0				5/19/2020	ISSUED FOR CONSTRUCTION

REGISTERED PROFESSIONAL ENGINEER
CHARLES R. ASHLEY
S5258
STRUCTURAL
STATE OF CALIFORNIA

Ashley & Vance ENGINEERING, INC
JOINT VENTURE
BLACK & VEATCH
FILANC

CITY OF MORRO BAY
MORRO BAY WATER
RECLAMATION FACILITY (WRF)

WATER AND COLLECTION SUPPLIES STORAGE SHEDS
STRUCTURAL
SECTIONS

DESIGNED: M. MARSH
DETAILED: S. BENJAMIN
CHECKED: I. SHOEBRIDGE
APPROVED: C. ASHLEY
DATE: 5/19/2020

0 1/2 1

IF THIS BAR DOES NOT MEASURE 1" THEN DRAWING IS NOT TO FULL SCALE

PROJECT NO.
400530

16-S-301

SHEET
173 OF 412

PLOTTED: 5/19/2020 1:56:03 PM
D400530

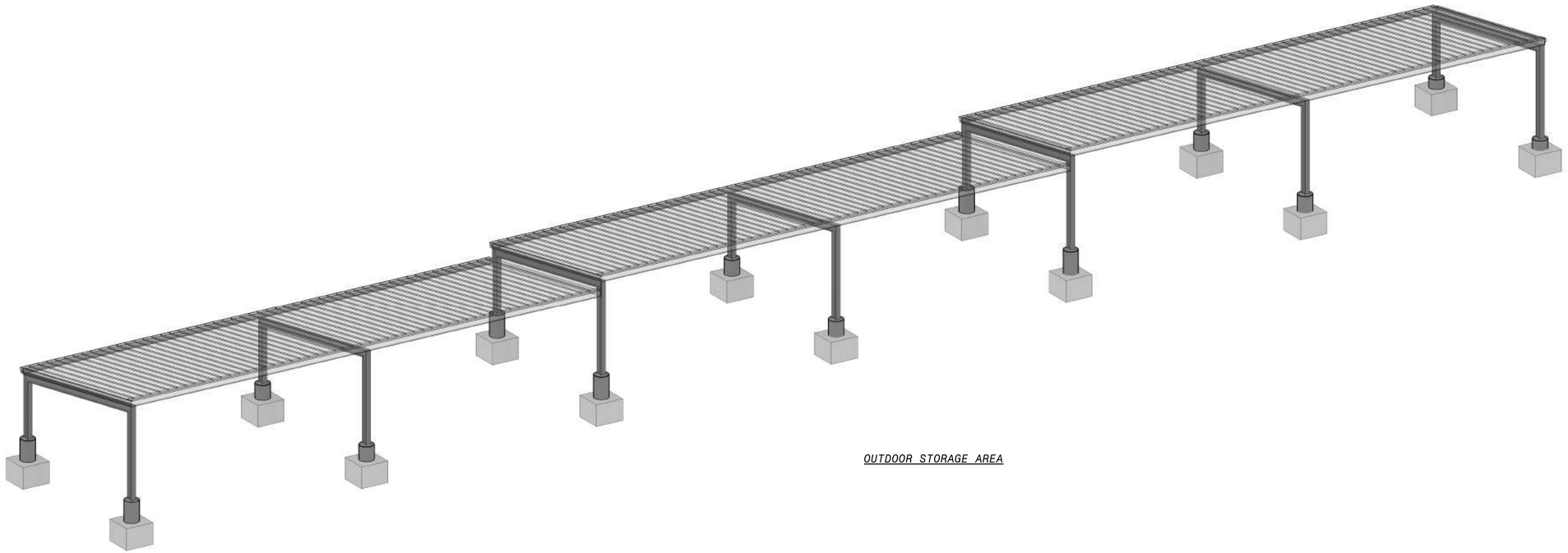

OUTDOOR STORAGE AREA

3D VIEW - SOUTH

NO.	BY	CHK	APP	DATE	REVISIONS AND RECORD OF USE
0				5/19/2020	ISSUED FOR CONSTRUCTION

REGISTERED PROFESSIONAL ENGINEER
CHARLES R. ASHLEY
C52258
STRUCTURAL
STATE OF CALIFORNIA

Ashley&Vance ENGINEERING, INC
JOINT VENTURE
BLACK & VEATCH
FILANC

CITY OF MORRO BAY
MORRO BAY WATER
RECLAMATION FACILITY (WRF)

CORPORATION YARD AREA
STRUCTURAL
3D VIEW

DESIGNED: C. TAYLOR
DETAILED: S. BENJAMIN
CHECKED: I. SHOEBRIDGE
APPROVED: C. ASHLEY
DATE: 5/19/2020

0 1/2 1
IF THIS BAR DOES NOT MEASURE 1" THEN DRAWING IS NOT TO FULL SCALE

PROJECT NO.
400530

17-S-001
SHEET
174 OF 412

PLOTTED: 5/19/2020 2:00:22 PM
D400530

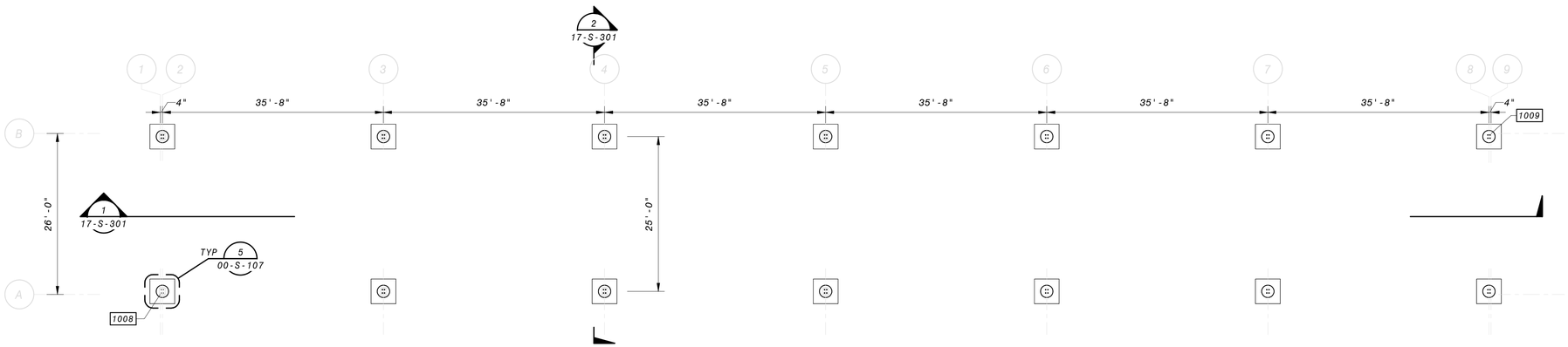

PLAN

3/32" = 1'-0"

NOTES:

1. DESIGN AND DRAWINGS FOR STEEL FRAME PRE-ENGINEERED METAL BUILDING TO BE PROVIDED BY BUILDING MFR. SEE SPECIFICATIONS FOR DESIGN CRITERIA.
2. FOUNDATION DESIGN HAS BEEN BASED ON THE FOLLOWING FRAME REACTIONS, ASSUMING A PINNED COLUMN BASE:
3. FRAME REACTIONS INCLUDE BOTH PRINCIPLE DIRECTIONS AND ORTHOGONAL COMBINATION EFFECTS.

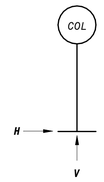

LOAD	VERTICAL V (K)	HORIZONTAL H (K)
DEAD	3.4	0.5
ROOF LIVE	7.7	1.0
SEISMIC	2.0	0.75
WIND (MAX)	10.5	2.5
WIND (MIN)	-10.5	-2.5

GENERAL FOUNDATION NOTES

1. PLEASE SEE SOILS REPORT FOR ADDITIONAL SPECIFICATIONS AND RECOMMENDATIONS. IT IS THE DESIGN BUILDER'S RESPONSIBILITY TO OBTAIN A COPY OF THE SOILS REPORT FROM THE OWNER OR OWNERS REPRESENTATIVE.
2. NOT USED.
3. FOR GENERAL STRUCTURAL NOTES, SEE SHEETS 00-S-002 AND STANDARD SPECIFICATIONS.
4. VERIFY ALL DIMENSIONS PRIOR TO COMMENCEMENT OF CONSTRUCTION.
5. ALL LAP SPLICES TO BE CLASS B PER DETAIL 1/00-S-101
6. COORDINATE COLUMN SIZE, LOCATION, AND ATTACHMENT WITH BUILDING MANUFACTURER PRIOR TO INSTALLATION.

12' 8' 4' 0' 10' 20'

3/32" = 1'-0"

NO.	BY	CHK	APP	DATE	REVISIONS AND RECORD OF USE
0				5/19/2020	ISSUED FOR CONSTRUCTION

REGISTERED PROFESSIONAL ENGINEER
CHARLES R. ASHLEY
C ASHLEY
55258
STRUCTURAL
STATE OF CALIFORNIA

Ashley & Vance ENGINEERING, INC
JOINT VENTURE
BLACK & VEATCH
FILANC

CITY OF MORRO BAY
MORRO BAY WATER
RECLAMATION FACILITY (WRF)

OUTDOOR STORAGE AREA
STRUCTURAL
PLAN

DESIGNED: C. TAYLOR
DETAILED: S. BENJAMIN
CHECKED: I. SHOEBRIDGE
APPROVED: C. ASHLEY
DATE: 5/19/2020

0 1/2 1
IF THIS BAR DOES NOT MEASURE 1" THEN DRAWING IS NOT TO FULL SCALE

PROJECT NO.
400530

17-S-101
SHEET
175 OF 412

PLOTTED: 5/19/2020 2:00:23 PM
D400530