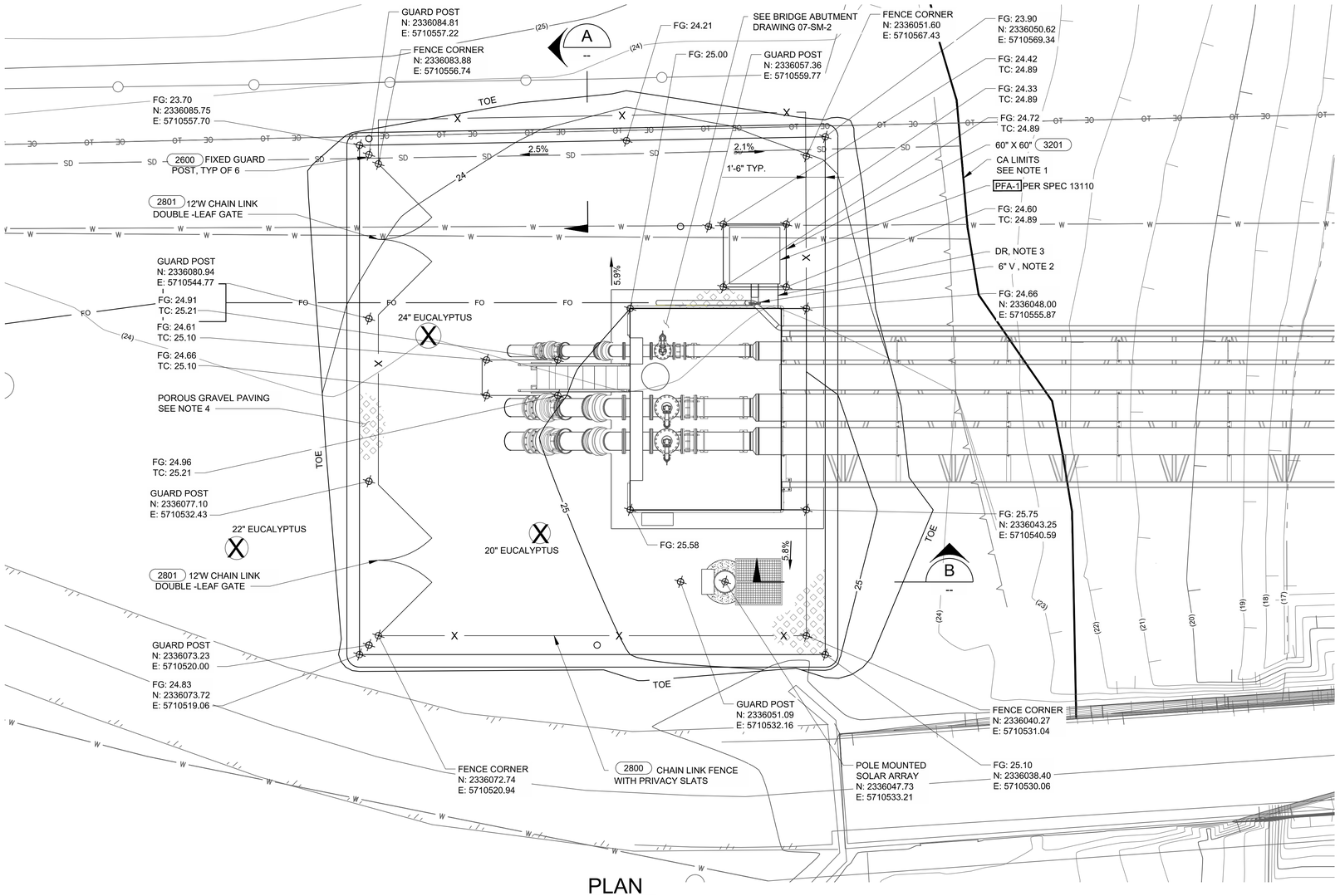

PLAN
1"=5'

NOTES:

1. CONSTRUCTION ACTIVITY (CA) LIMITS OFFSET 3' FROM EDGE OF WETLAND BOUNDARY. GROUND DISTURBING ACTIVITIES SHALL NOT EXTEND PAST CA LIMITS. SWPPP BMPS SHALL BE INSTALLED PER APPROVED SWPPP PLAN AT A MINIMUM ALONG CA LIMITS.
2. CONTRACTOR TO CONNECT 6"V (FL) TO OUTDOOR PASSIVE ODOR CONTROL SYSTEM PER MANUFACTURER'S RECOMMENDATION.
3. CONTRACTOR TO INSTALL SMALL DIAMETER DRAIN FROM OUTDOOR PASSIVE ODOR CONTROL SYSTEM PER MANUFACTURER'S RECOMMENDATION.
4. POROUS GRAVEL PAVING SHALL BE AN UNDERLYING H-20 RATED PLASTIC GRID SYSTEM WITH BACKING FABRIC AND TOPPED WITH 1/2" CRUSHED ROCK. PLACE 4" CL2 AB AT 90% RELATIVE COMPACTION UNDERNEATH BACKING FABRIC. INVISIBLE STRUCTURES GRAVELPAVE2, NDS EZ-ROLL GRAVEL PAVER, OR EQUAL.

LEGEND:

X DEMOLISH EXISTING TREES PER 05-PP-06 AND 05-PP-07

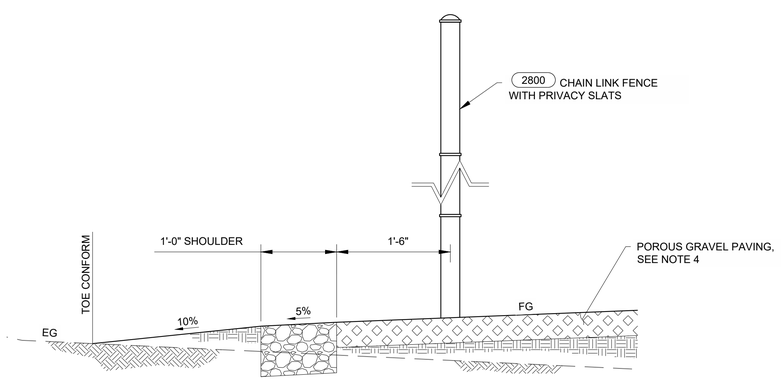

A SECTION
-- 1"= 1'

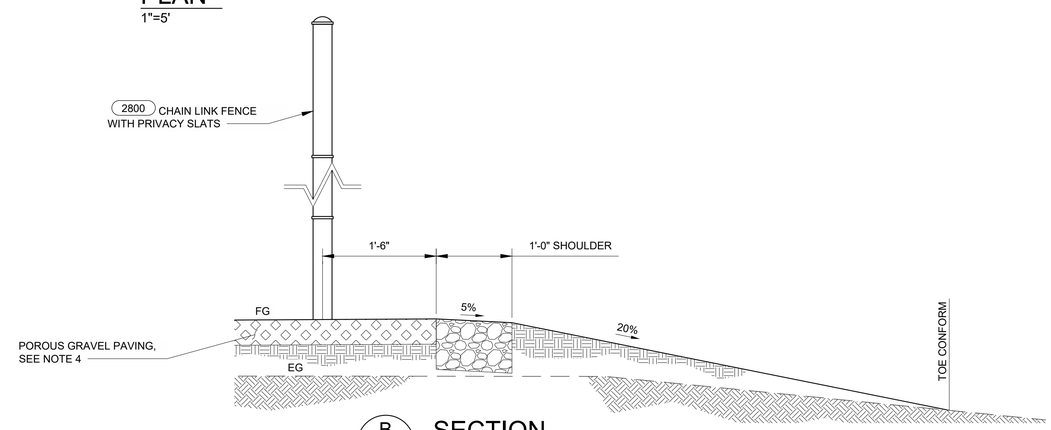

B SECTION
-- 1"= 1'

1 0 1 2 FEET
SCALE 1"=1'

5 0 5 10 FEET
SCALE 1"=5'

REGISTERED PROFESSIONAL ENGINEER
MICHAEL P. PIMPLE
No. C067194
CIVIL
STATE OF CALIFORNIA
05/29/2020

DESIGN P WEBSTER
DRAWN P WEBSTER
CHECKED T LEWIS
APPROVED M FISHER

WATERWORKS ENGINEERS
2260 Douglas Blvd, Suite 105 • Roseville, CA 95661 • 916-780-2888

CITY OF MORRO BAY
WATER RECLAMATION FACILITY
LIFT STATION AND OFFSITE PIPELINES

CIVIL
NORTHERN BRIDGE ABUTMENT
GRADING PLAN

DATE MAY 2020
PROJECT NUMBER 17-082
DRAWING NUMBER 07-C-1
SHEET NUMBER 121

L:\CAD\PROJECTS\17-082 MORRO BAY PS AND PIPELINE_{S}\PROJECT FILES\DELIVERABLES\1782D-07C101.DWG

JOB NUMBER: 17-082 FILENAME: 1782D-07C101.DWG PLOT DATE: 06/15/20 PLOT TIME: 09:57:14

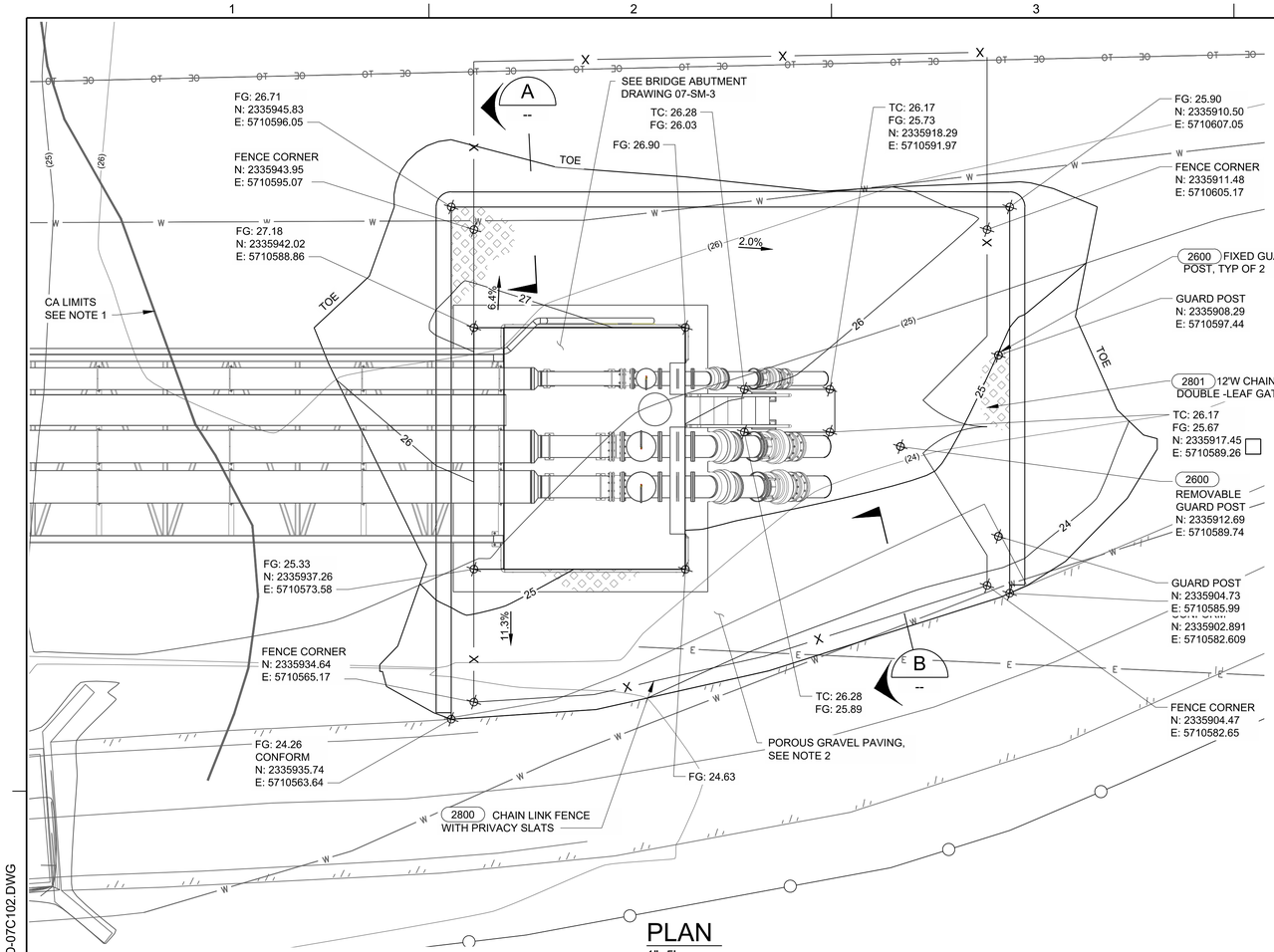

PLAN
1"=5'

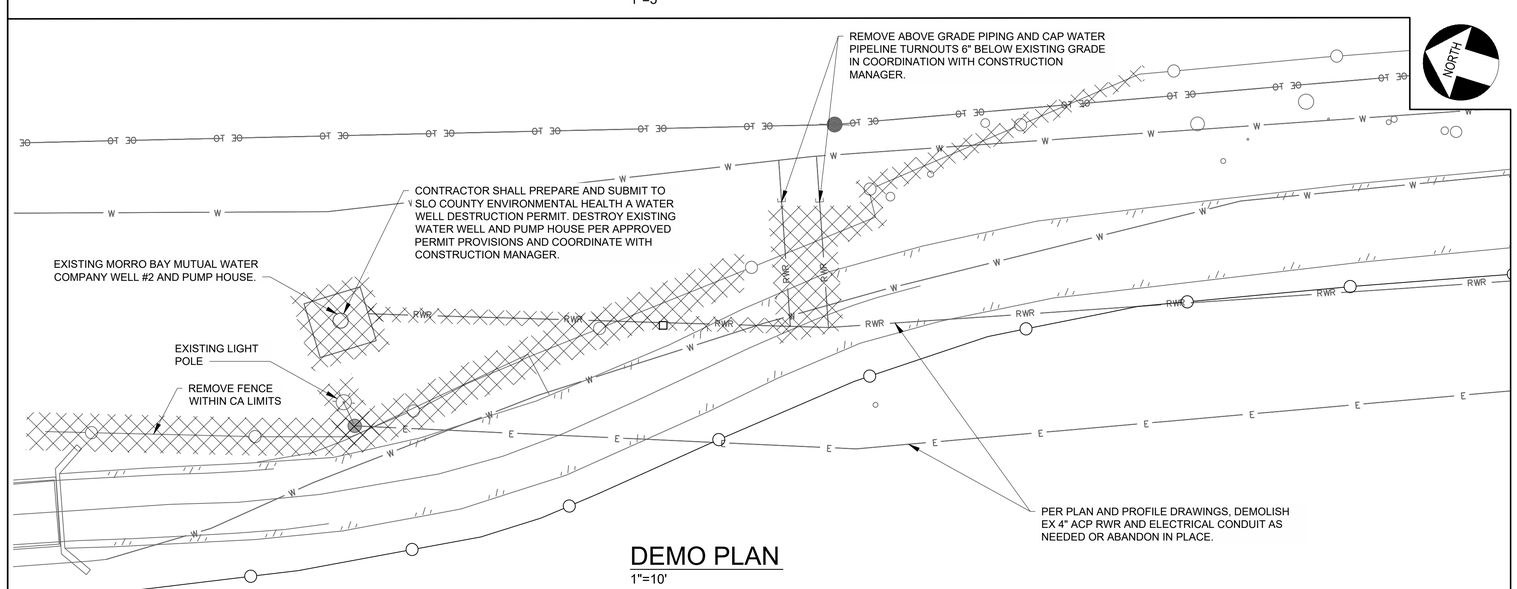

DEMO PLAN
1"=10'

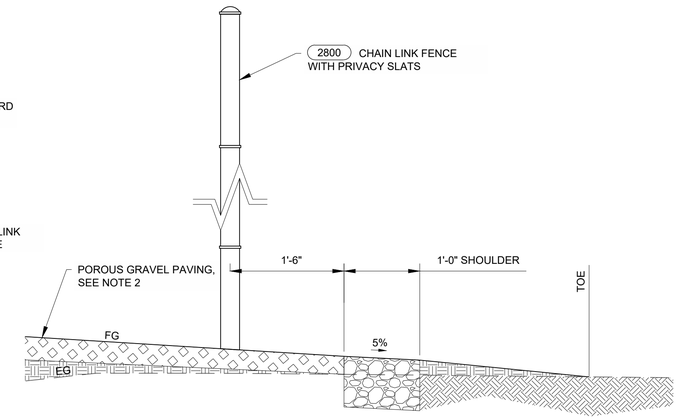

A SECTION
1"= 1'

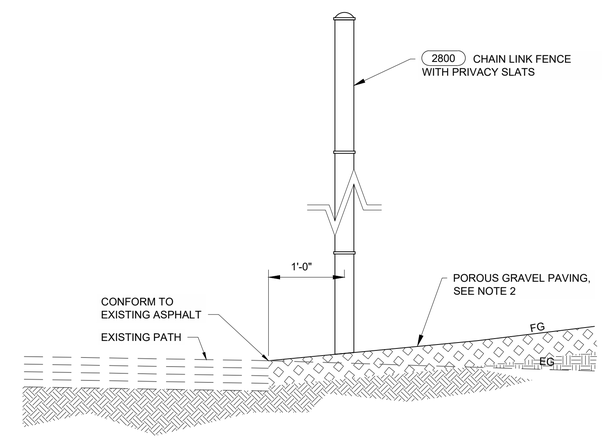

B SECTION
1"=1'

NOTES:

1. CONSTRUCTION ACTIVITY (CA) LIMITS OFFSET 3' FROM EDGE OF WETLAND BOUNDARY. GROUND DISTURBING ACTIVITIES SHALL NOT EXTEND PAST CA LIMITS. SWPPP BMPS SHALL BE INSTALLED PER APPROVED SWPPP PLAN AT A MINIMUM ALONG CA LIMITS.
2. POROUS GRAVEL PAVING SHALL BE AN UNDERLYING H-20 RATED PLASTIC GRID SYSTEM WITH BACKING FABRIC AND TOPPED WITH 1/2" CRUSHED ROCK. PLACE 4" CL2 AB AT 90% RELATIVE COMPACTION UNDERNEATH BACKING FABRIC. INVISIBLE STRUCTURES GRAVELPAVE2, NDS EZ-ROLL GRAVEL PAVER, OR EQUAL.

LEGEND:

DEMOLISH EXISTING LIGHT POLE, WELL PUMP HOUSE, 4" ACP RWR PIPING, ELECTRICAL CONDUIT, AND FENCE.

1 0 1 2 FEET
SCALE 1"=1'

5 0 5 10 FEET
SCALE 1"=5'

10 0 10 20 FEET
SCALE 1"=10'

REGISTERED PROFESSIONAL ENGINEER
RICHARD A. LEWIS
No. C67194
CIVIL
STATE OF CALIFORNIA
05/29/2020

DESIGN P WEBSTER
DRAWN P WEBSTER
CHECKED T LEWIS
APPROVED M FISHER

WATERWORKS ENGINEERS
2260 Douglas Blvd, Suite 105 • Roseville, CA 95661 • 916-780-2888

CITY OF MORRO BAY
WATER RECLAMATION FACILITY
LIFT STATION AND OFFSITE PIPELINES

CIVIL
SOUTHERN BRIDGE ABUTMENT GRADING PLAN

DATE MAY 2020
PROJECT NUMBER 17-082
DRAWING NUMBER 07-C-2
SHEET NUMBER 122

L:\CAD\PROJECTS\17-082 MORRO BAY PS AND PIPELINE_(S)\PROJECT FILES\DELIVERABLES\1782D-07C102.DWG

JOB NUMBER: 17-082 FILENAME: 1782D-07C102.DWG PLOT DATE: 06/15/20 PLOT TIME: 09:57:55

EXCAVATION/GRADING NOTES:

1. THE LOWER 4 FEET OF THE ABUTMENT EXCAVATION SHOULD BE PERFORMED WITH CAUTION, USING AN EXCAVATOR TYPE OF EQUIPMENT, AND SUCH THAT CONSTRUCTION EQUIPMENT WILL NOT TRAVERSE ACROSS THE BOTTOM OF THE EXCAVATION.
2. EXCAVATIONS FOR THE ABUTMENT SHOULD BE DEEPENED TO ALLOW AT LEAST 2 FEET OF CRUSHED ROCK (AGGREGATE FOR STABILIZATION) ENCASED IN A GEOTEXTILE/STABILIZATION TO BE PLACED ON THE UINDISTURBED SUBGRADE AT THE BOTTOM OF THE EXCAVATION.
3. PLACE THE AGGREGATE FOR STABILIZATION IN (2) 1 FOOT LIFTS. THE FIRST LIFT SHOULD BE PLACED WITH AN EXCAVATOR OR LIGHT EQUIPMENT SUCH AS A BOB CAT. CONSOLIDATE EACH LIFT W/ A MINIMUM OF (4) PASSES WITH A VIBRATORY PLATE OR BY TRACK WALKING WITH A WIDE-TRACKED DOZER. THE SECOND LIFT MAY BE PLACED USING A WIDE-TRACK DOZER OR SIMILAR EQUIPMENT.
4. EXTEND THE AGGREGATE FOR STABILIZATION 3 FEET MINIMUM BEYOND THE FOOTPRINT OF THE STRUCTURE & COMPLETELY ENCOMPASS WITH GEOTEXTILE FABRIC.
5. A LEVELING COURSE OF STRUCTURAL FILL MAY BE PLACED AND COMPACTED OVER THE STABILIZATION LAYER IF DESIRED.

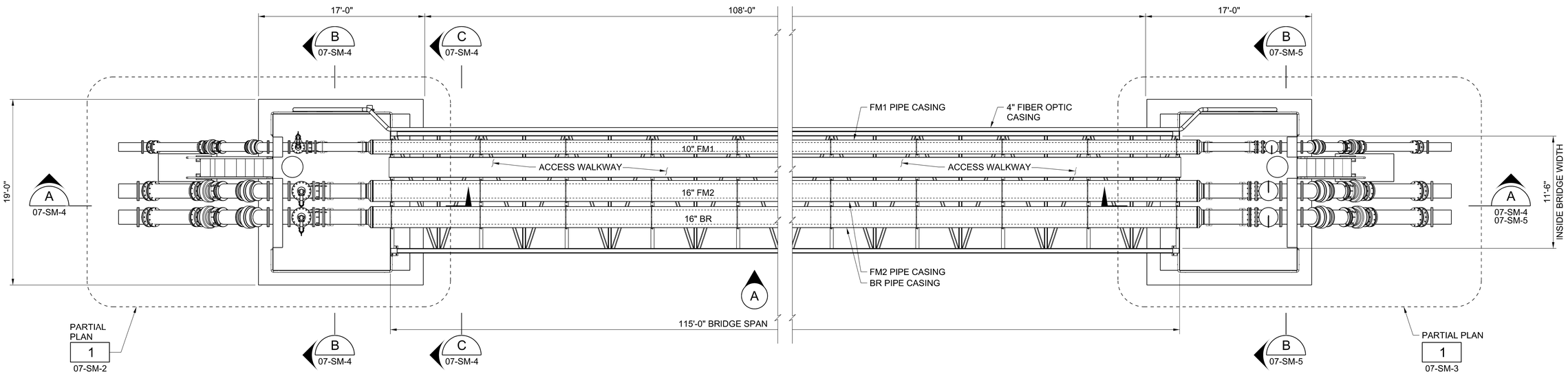

PLAN
3/16" = 1'-0"

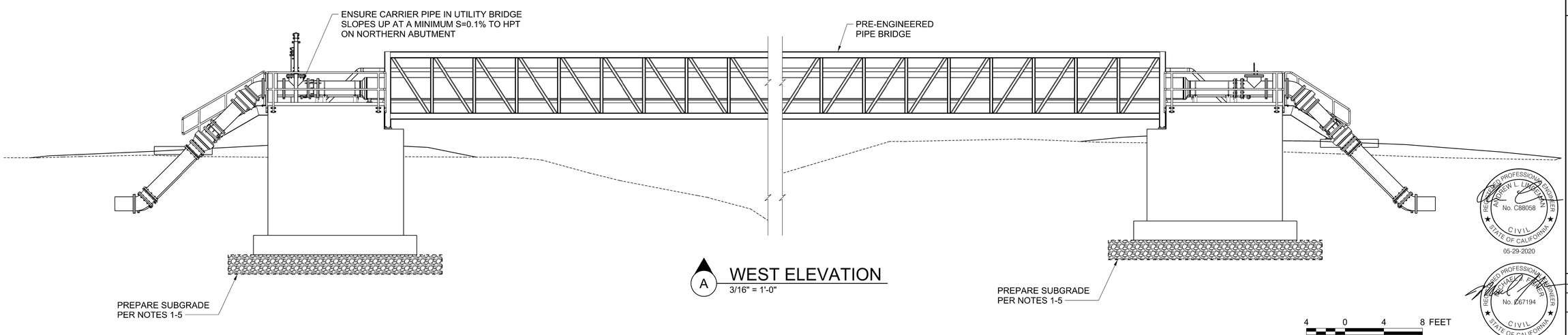

A WEST ELEVATION
3/16" = 1'-0"

REGISTERED PROFESSIONAL ENGINEER ANDREW L. UNDERMAN No. C88058 CIVIL STATE OF CALIFORNIA
05-29-2020

REGISTERED PROFESSIONAL ENGINEER MICHAEL J. FISHER No. C67194 CIVIL STATE OF CALIFORNIA
05-29-2020

DESIGNED JK/AL/TL
DRAWN C WORRALL
CHECKED JR/MF
APPROVED M FISHER

WATERWORKS ENGINEERS
2260 Douglas Blvd., Suite 105 • Roseville, CA 95661 • 916-780-2888

CITY OF MORRO BAY
WATER RECLAMATION FACILITY
LIFT STATIONS AND OFFSITE PIPELINES

STRUCTURAL / MECHANICAL
UTILITY BRIDGE
PLAN AND ELEVATION

DATE MAY 2020
PROJECT NUMBER 17-082
DRAWING NUMBER 07-SM-1
SHEET NUMBER 123

FILENAME: 1782D-07SM101.DGN PLOT DATE: 5/1/2020 7:30:47 AM

NOTES:

1. H-20 RATED 24" DIA COMPOSITE COVER AND FRAME WITH LOCKING MECHANISM. ADEQUATELY SUPPORT FRAME PER MANUFACTURERS RECOMMENDATION. FIBRELITE FL600 OR EQ AND (2121).
2. FO CONDUIT CONTINUATION NOT DEPICTED. TRANSITION TO MATERIAL SPECIFIED ON PLAN AND PROFILE 18" ABOVE FG.

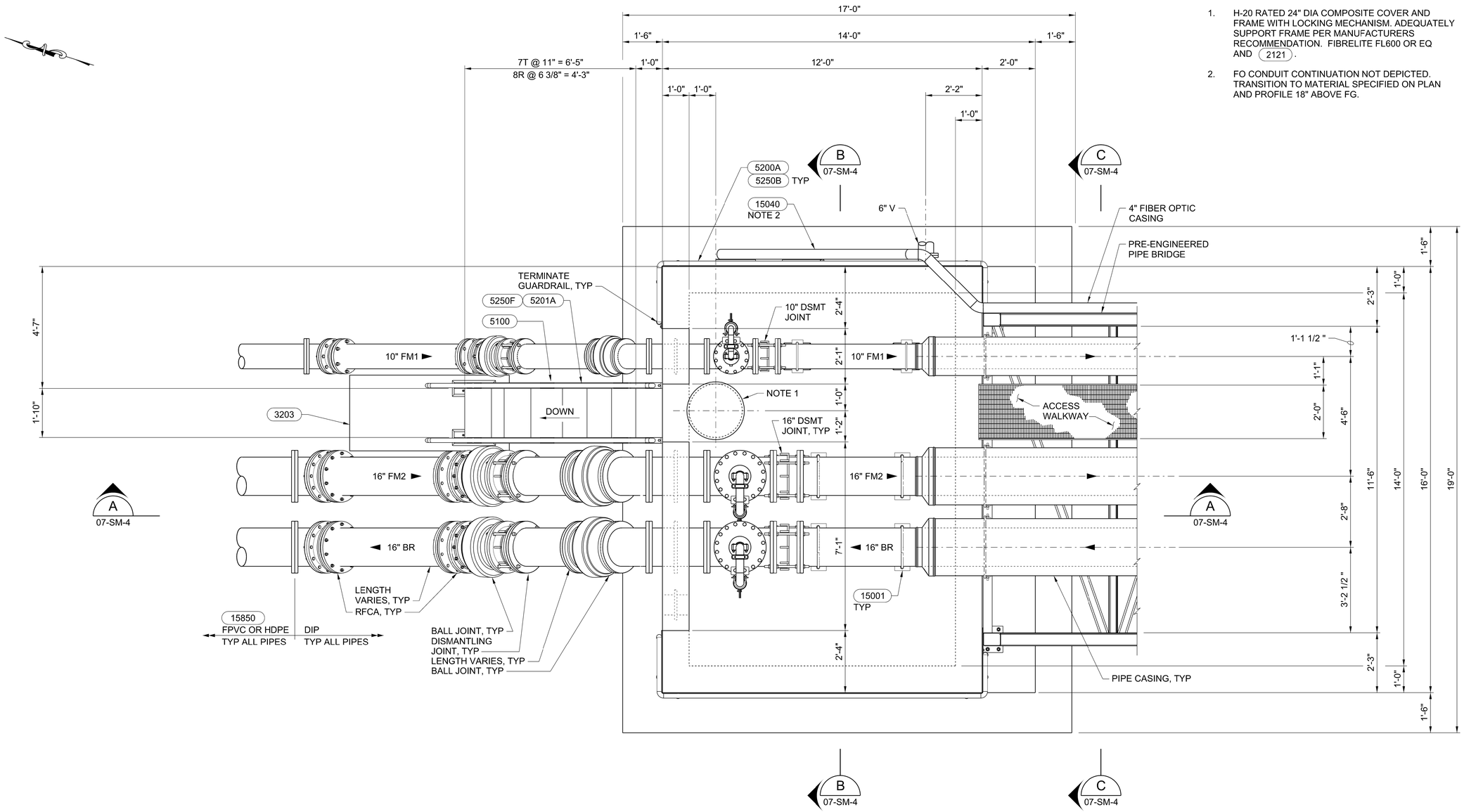

1 PARTIAL PLAN
07-SM-1 1/2" = 1'-0"

2 0 2 4 FEET
SCALE 1/2"=1'-0"

REGISTERED PROFESSIONAL ENGINEER ANDREW L. LINDGREN No. C88058 CIVIL STATE OF CALIFORNIA
05-29-2020

REGISTERED PROFESSIONAL ENGINEER RICHARD T. JONES No. C87194 CIVIL STATE OF CALIFORNIA
05-29-2020

DESIGNED JK/AL/TL
DRAWN C WORRALL
CHECKED JR/MF
APPROVED M FISHER

WATERWORKS ENGINEERS
2260 Douglas Blvd., Suite 105 • Roseville, CA 95661 • 916-780-2888

CITY OF MORRO BAY
WATER RECLAMATION FACILITY
LIFT STATIONS AND OFFSITE PIPELINES

STRUCTURAL / MECHANICAL
UTILITY BRIDGE
NORTH ABUTMENT
PARTIAL PLAN

DATE MAY 2020
PROJECT NUMBER 17-082
DRAWING NUMBER 07-SM-2
SHEET NUMBER 124

FILENAME: 1782D-07SM102.DGN PLOT DATE: 5/26/2020 11:19:15 AM

NOTES:

1. H-20 RATED 24" DIA COMPOSITE COVER AND FRAME WITH LOCKING MECHANISM. ADEQUATELY SUPPORT FRAME PER MANUFACTURERS RECOMMENDATION. FIBRELITE FL600 OR EQ AND (2121).
2. FO CONDUIT CONTINUATION NOT DEPICTED. TRANSITION TO MATERIAL SPECIFIED ON PLAN AND PROFILE 18" ABOVE FG.

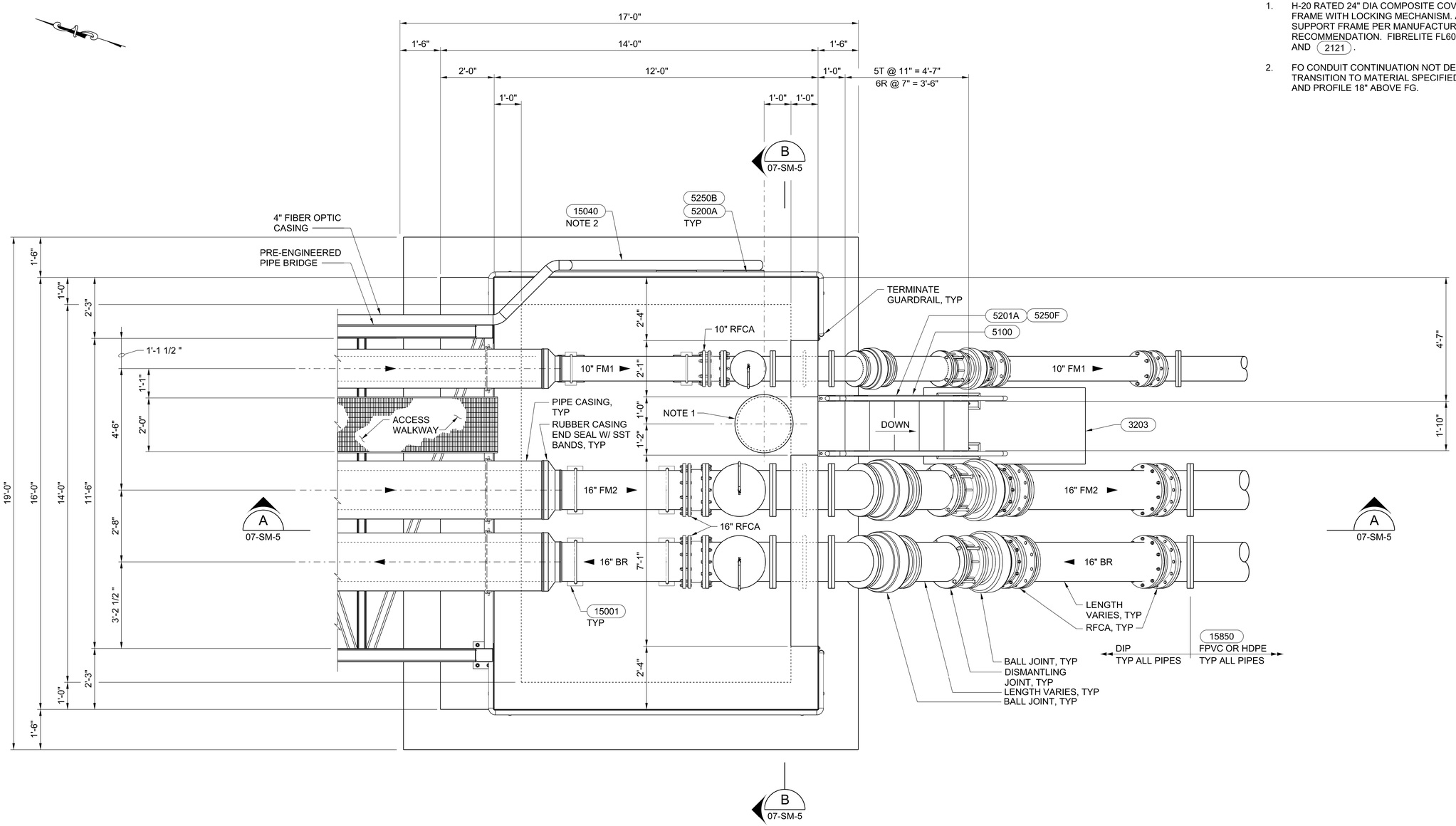

1 PARTIAL PLAN
07-SM-1 1/2" = 1'-0"

2 0 2 4 FEET
SCALE 1/2"=1'-0"

DESIGNED JK/AL/TL
DRAWN C WORRALL
CHECKED JR/MP
APPROVED M FISHER

WATERWORKS ENGINEERS
2260 Douglas Blvd., Suite 105 • Roseville, CA 95661 • 916-780-2888

CITY OF MORRO BAY
WATER RECLAMATION FACILITY
LIFT STATIONS AND OFFSITE PIPELINES

STRUCTURAL / MECHANICAL
UTILITY BRIDGE
SOUTH ABUTMENT
PARTIAL PLAN

REGISTERED PROFESSIONAL ENGINEER ANDREW L. LUNDEEN No. C88058 CIVIL STATE OF CALIFORNIA
05-29-2020

REGISTERED PROFESSIONAL ENGINEER RICHARD A. FRENCH No. C67194 CIVIL STATE OF CALIFORNIA
05-29-2020

DATE MAY 2020
PROJECT NUMBER 17-082
DRAWING NUMBER 07-SM-3
SHEET NUMBER 125

FILENAME: 1782D-07SM103.DGN PLOT DATE: 5/26/2020 11:13:56 AM

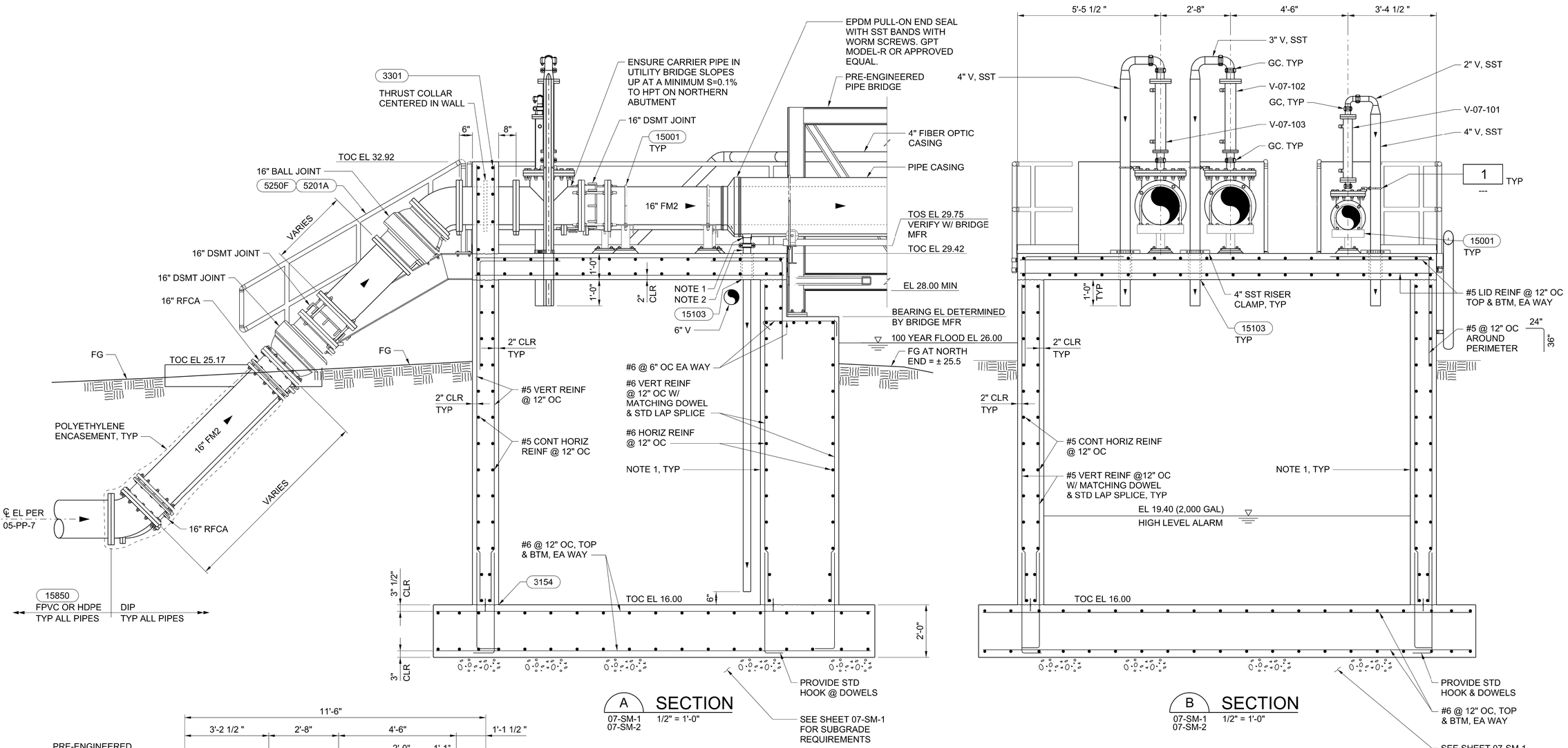

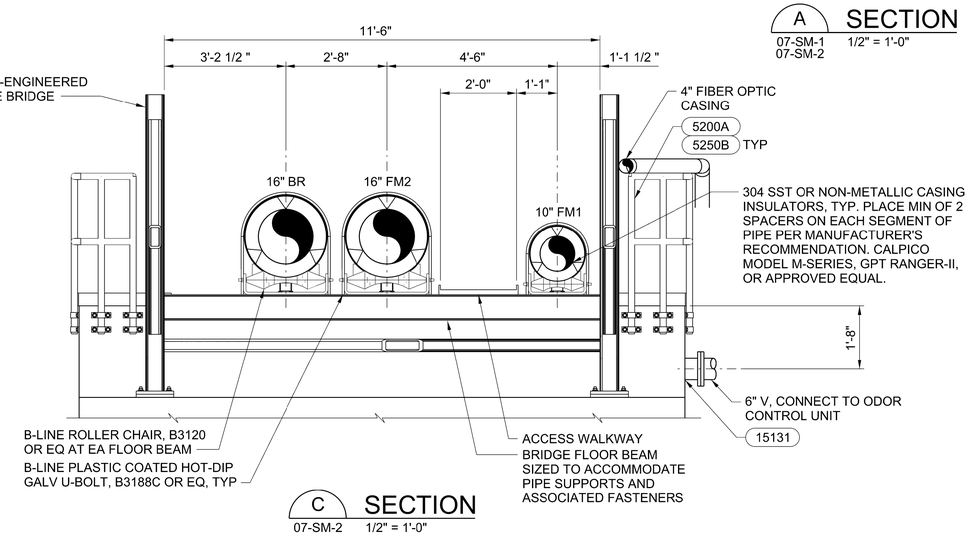

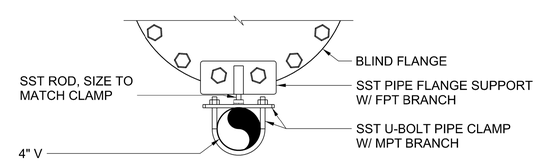

PLAN

1 DETAIL
--- 1 1/2" = 1'-0"

NOTES:

1. 3" WELD-O-LET W/ 3" SST HEX NIPPLE TO QUICK RELEASE COUPLING (MALE).
2. SST QUICK RELEASE COUPLING (FEMALE) 3" WRAPPED EPDM SUCTION HOSE (FLEXIBLE). ACCOMODATES CASING MOVEMENT AND THERMAL EXPANSION.

VAULT NOTES:

1. COAT ALL INTERIOR CONCRETE SURFACES W/ MULTI-COMPONENT RESIN-BASED MORTAR LINING SYSTEM SPECIFICALLY DESIGNED TO PROTECT FROM CHEMICAL ATTACK/CORROSION PER SPECIFICATION SECTION 09875 (REQUIRED @ NORTH ABUTMENT VAULT ONLY).

REGISTERED PROFESSIONAL ENGINEER ANDREW L. LIKEMAN No. C88058 CIVIL STATE OF CALIFORNIA
05-29-2020

REGISTERED PROFESSIONAL ENGINEER RICHARD T. RINGER No. C67194 CIVIL STATE OF CALIFORNIA
05-29-2020

6" 0 6" 1 FEET
SCALE 1 1/2"=1'-0"

2 0 2 4 FEET
SCALE 1/2"=1'-0"

DESIGNED JK/AL/TL
DRAWN C WORRALL
CHECKED JR/MP
APPROVED M FISHER

WATERWORKS ENGINEERS
2260 Douglas Blvd., Suite 105 • Roseville, CA 95661 • 916-780-2888

CITY OF MORRO BAY
WATER RECLAMATION FACILITY LIFT STATIONS AND OFFSITE PIPELINES

STRUCTURAL / MECHANICAL
UTILITY BRIDGE NORTH ABUTMENT SECTIONS AND DETAIL

DATE MAY 2020
PROJECT NUMBER 17-082
DRAWING NUMBER 07-SM-4
SHEET NUMBER 126

FILENAME: 1782D-07SM201.DGN PLOT DATE: 5/26/2020 11:35:58 AM

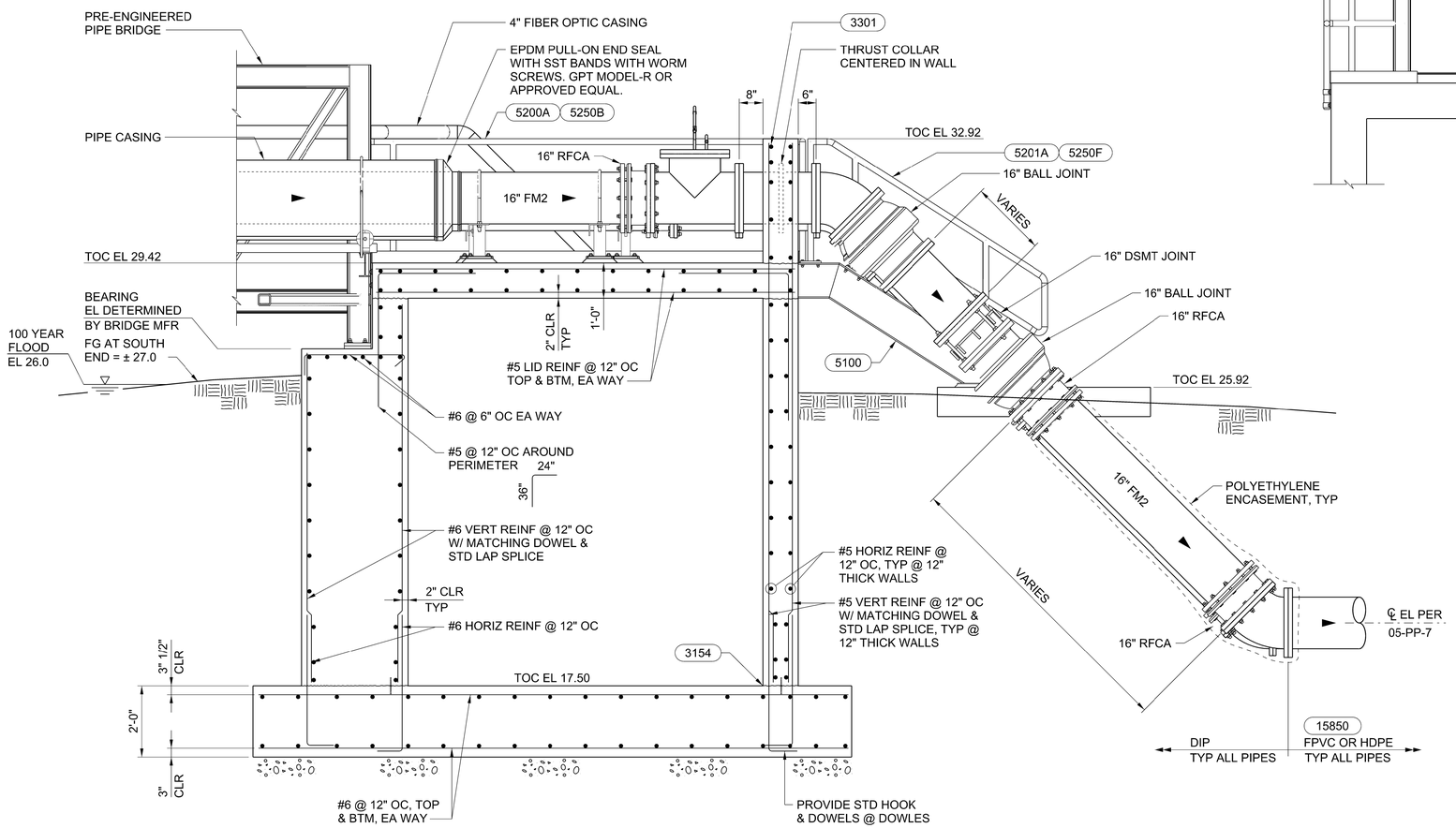

A SECTION
07-SM-1
07-SM-3
1/2" = 1'-0"

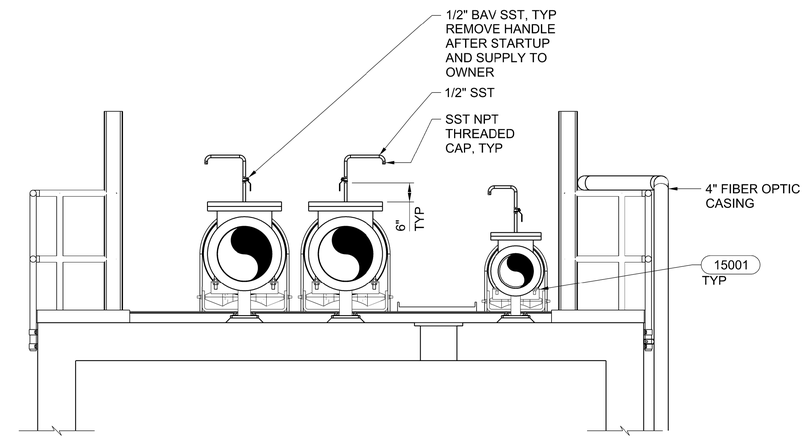

B SECTION
07-SM-1
07-SM-3
1/2" = 1'-0"

2 0 2 4 FEET
SCALE 1/2"=1'-0"

REGISTERED PROFESSIONAL ENGINEER ANDREW L. LINDGREN No. C88058 CIVIL STATE OF CALIFORNIA
05-29-2020

REGISTERED PROFESSIONAL ENGINEER MICHAEL J. FISHER No. C67194 CIVIL STATE OF CALIFORNIA
05-29-2020

DESIGNED JK/AL/TL
DRAWN C WORRALL
CHECKED JR/MP
APPROVED M FISHER

WATERWORKS ENGINEERS
2260 Douglas Blvd., Suite 105 • Roseville, CA 95661 • 916-780-2888

CITY OF MORRO BAY
WATER RECLAMATION FACILITY
LIFT STATIONS AND OFFSITE PIPELINES

STRUCTURAL / MECHANICAL
UTILITY BRIDGE
SOUTH ABUTMENT
SECTIONS

DATE MAY 2020
PROJECT NUMBER 17-082
DRAWING NUMBER 07-SM-5
SHEET NUMBER 127

FILENAME: 1782D-07SM202.DGN PLOT DATE: 5/26/2020 2:12:13 PM

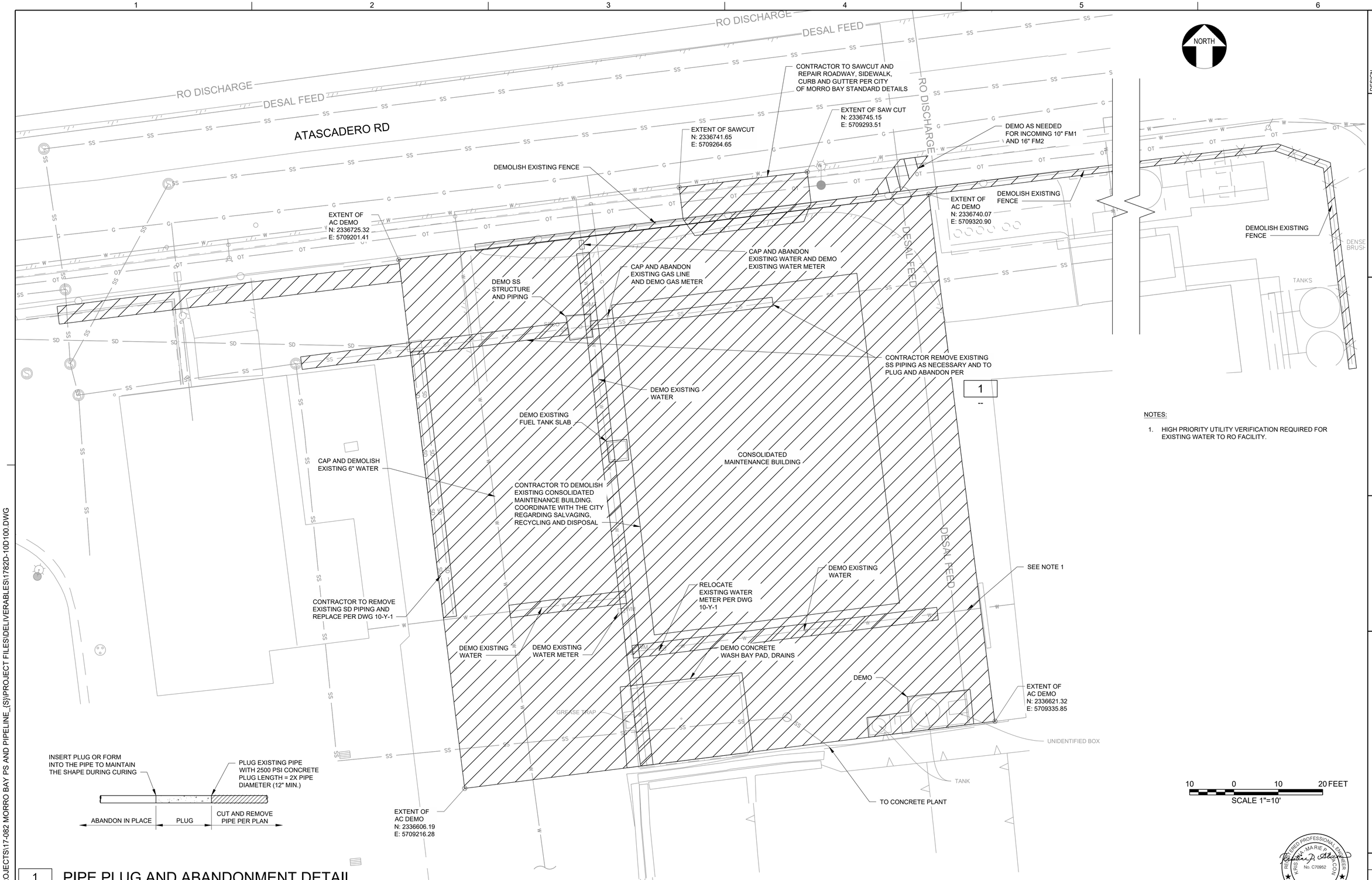

NOTES:

1. HIGH PRIORITY UTILITY VERIFICATION REQUIRED FOR EXISTING WATER TO RO FACILITY.

1 PIPE PLUG AND ABANDONMENT DETAIL

-- NTS

REGISTERED PROFESSIONAL ENGINEER
KRISTA-MARIE A. ALACON
No. C70952
CIVIL
STATE OF CALIFORNIA
05/29/2020

DESIGN K. ALACON
DRAWN L. CHAPMAN
CHECKED K. ALACON
APPROVED M. FISHER

WATERWORKS ENGINEERS
2360 Douglas Blvd, Suite 105 • Roseville, CA 95661 • 916-780-2888

CITY OF MORRO BAY
WATER RECLAMATION FACILITY
LIFT STATION AND OFFSITE PIPELINES

CIVIL
PUMP STATION A DEMOLITION PLAN

DATE MAY 2020
PROJECT NUMBER 17-082
DRAWING NUMBER 10-D-1
SHEET NUMBER 128

L:\CAD\PROJECTS\17-082 MORRO BAY PS AND PIPELINE_(S)\PROJECT FILES\DELIVERABLES\1782D-10D100.DWG

JOB NUMBER: 00-000 FILENAME: 1782D-10D100.DWG PLOT DATE: 06/15/20 PLOT TIME: 10:10:55

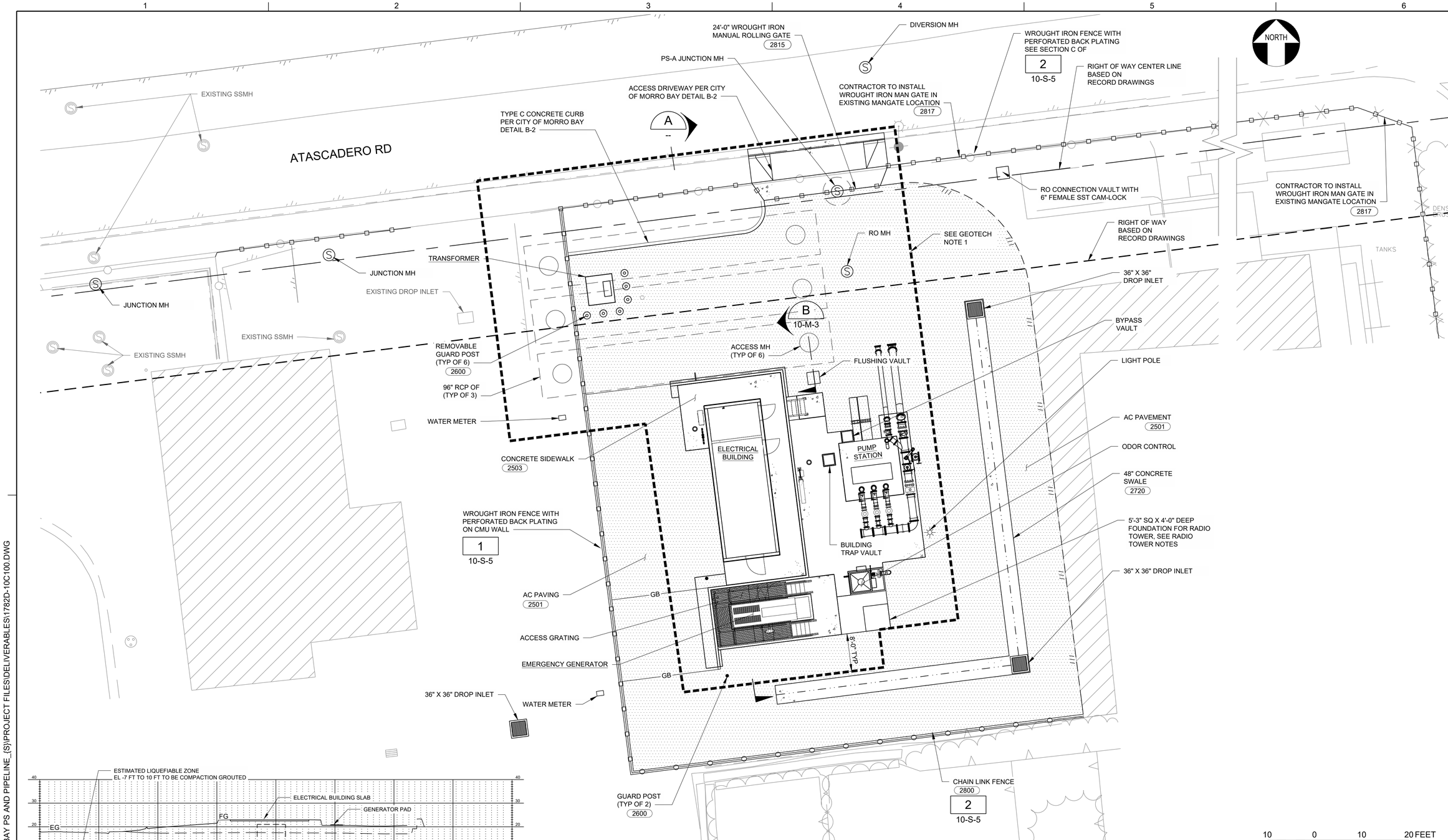

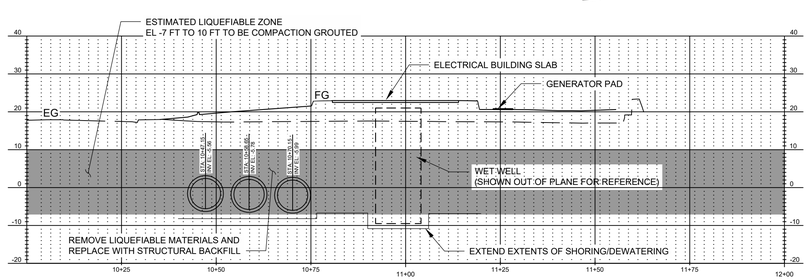

A SECTION
1" = 20'

GEOTECH NOTES:

1. SOIL IMPROVEMENTS IN THIS AREA, EITHER COMPACTION GROUTING PER SECTION 03700 OR REMOVE ALL MATERIALS TO EL -7.0 AND REPLACE WITH STRUCTURAL FILL, COMPACTED TO 95% RELATIVE COMPACTION.
2. EXTEND COMPACTION GROUT ZONE 8' BEYOND FOUNDATIONS.

CONSTRUCTION SEQUENCING WITH COMPACTION GROUTING:

1. SHORE/DEWATER WET WELL AND 96" RCP EXCAVATIONS.
2. INSTALL ANY PIPING THAT WILL BE BELOW 5 FEET AND BACKFILL TO EG.
3. COMPACTION GROUTING OF PAD FOR ELECTRICAL BUILDING.
4. PLACE FILL TO FINISH GRADE - CONSTRUCT ELECTRICAL BUILDING.

RADIO TOWER NOTES:

1. RADIO TOWER DESIGN SHALL BE A DEFFERED SUBMITTAL OBTAINED BY THE CONTRACTOR. ENGINEER SHALL REVIEW AND APPROVE THE TOWER SUBMITTAL PRIOR TO CONSTRUCTION.
2. COORDINATE RADIO TOWER DESIGN WITH ELECTRICAL SYSTEMS ENGINEER AND DRAWINGS.
3. TOWER PLANS AND CALCULATIONS SHALL BE SIGNED AND SEALED BY A CALIFONRIA LICENSED CIVIL OR STRUCTURAL ENGINEER.
4. SEE STRUCTURAL NOTES ON SHEET G-7 FOR WIND AND SEISMIC DESIGN CRITERIA.

10 0 10 20 FEET
SCALE 1"=10'

REGISTERED PROFESSIONAL ENGINEER
KRISTIN MARIE P. ALACON
No. C70952
CIVIL
STATE OF CALIFORNIA
05/29/2020

DESIGN K. ALACON
DRAWN L. CHAPMAN
CHECKED K. ALACON
APPROVED M. FISHER

WATERWORKS ENGINEERS
2260 Douglas Blvd, Suite 105 • Roseville, CA 95661 • 916-780-2888

CITY OF MORRO BAY
WATER RECLAMATION FACILITY
LIFT STATION AND OFFSITE PIPELINES

CIVIL
PUMP STATION A OVERALL PLAN

DATE MAY 2020
PROJECT NUMBER 17-082
DRAWING NUMBER 10-C-1
SHEET NUMBER 129

L:\CAD\PROJECTS\17-082 MORRO BAY PS AND PIPELINE_(S)\PROJECT FILES\DELIVERABLES\1782D-10C100.DWG

JOB NUMBER: 00-000 FILENAME: 1782D-10C100.DWG PLOT DATE: 06/15/20 PLOT TIME: 10:11:43

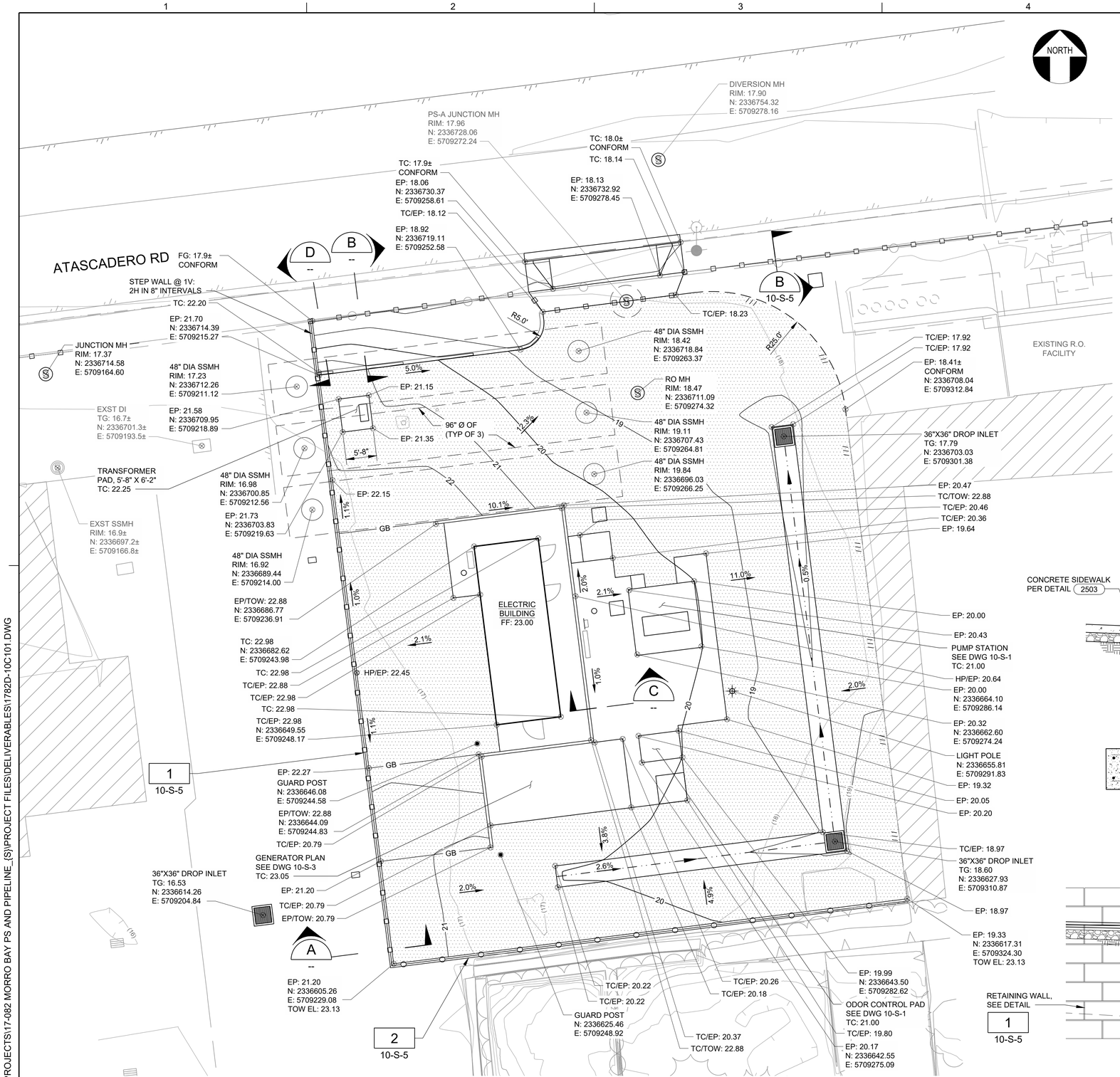

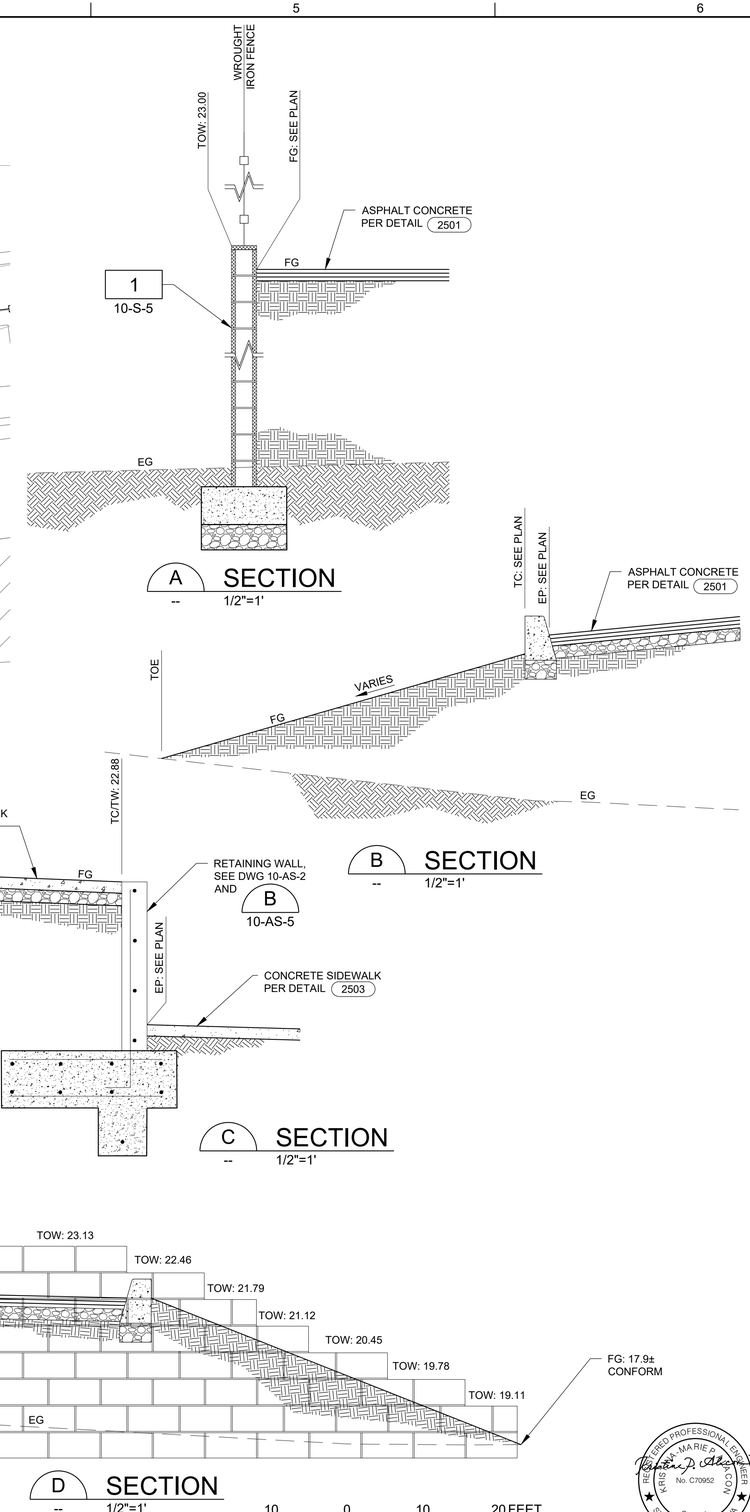

DESIGN K. ALACON
DRAWN L. CHAPMAN
CHECKED K. ALACON
APPROVED M. FISHER

WATERWORKS ENGINEERS
2260 Douglas Blvd, Suite 105 • Roseville, CA 95661 • 916-780-2888

CITY OF MORRO BAY
WATER RECLAMATION FACILITY
LIFT STATION AND OFFSITE PIPELINES

CIVIL
PUMP STATION A GRADING PLAN

REGISTERED PROFESSIONAL ENGINEER
KRISTINA MARIE ALACON
No. C70952
CIVIL
STATE OF CALIFORNIA
05/29/2020

DATE MAY 2020
PROJECT NUMBER 17-082
DRAWING NUMBER 10-C-2
SHEET NUMBER 130

L:\CAD\PROJECTS\17-082 MORRO BAY PS AND PIPELINE_(S)\PROJECT FILES\DELIVERABLES\1782D-10C101.DWG

JOB NUMBER: 00-000 FILENAME: 1782D-10C101.DWG PLOT DATE: 06/15/20 PLOT TIME: 10:12:41

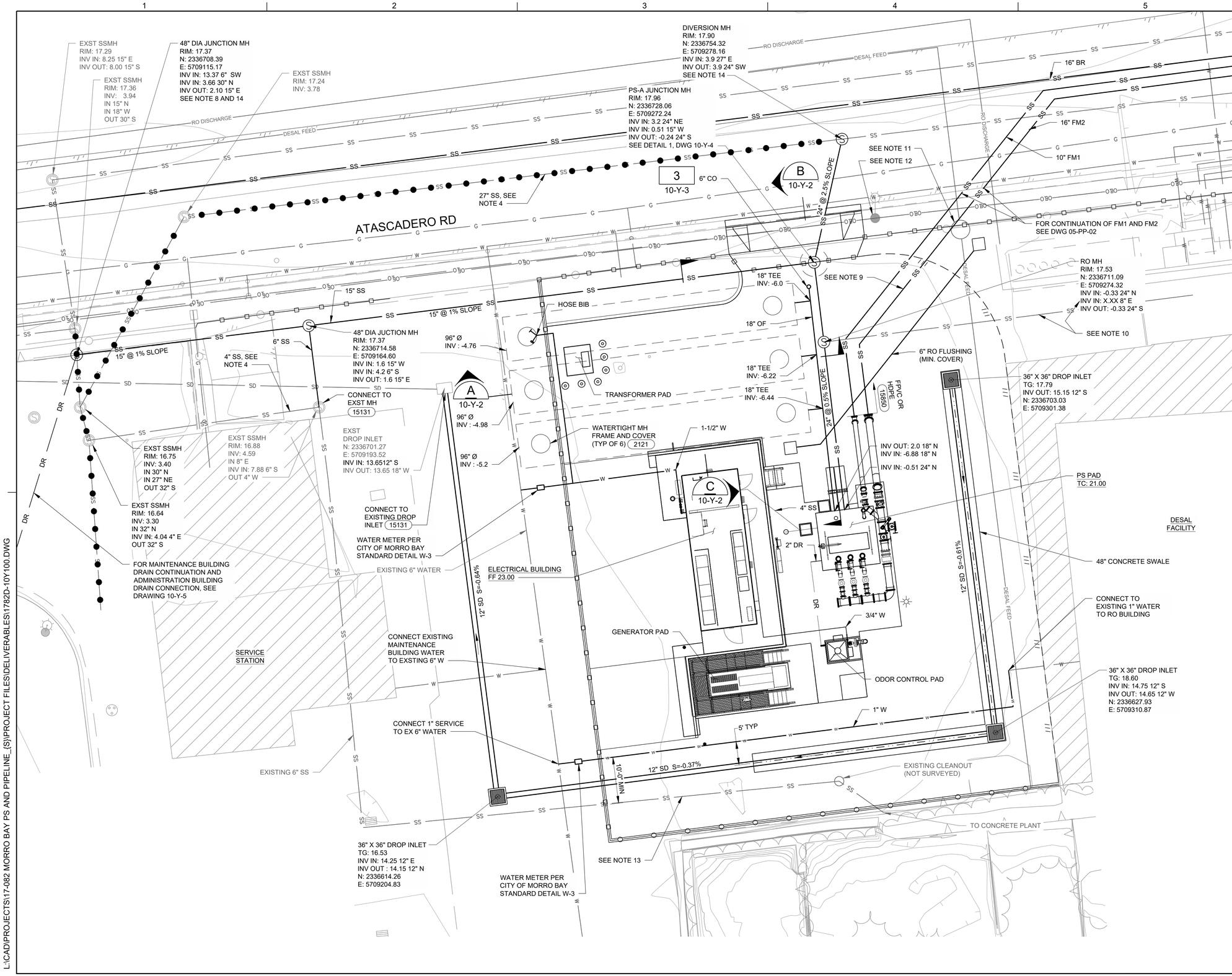

NORTH

NOTES:

1. SEWER MANHOLES SHALL BE PER CITY OF MORRO BAY STANDARD DETAIL S-3 UNLESS OTHERWISE NOTED.
2. SEWER MANHOLE FRAME AND COVER SHALL BE PINKERTON NO. A-107, WEIGHT 264 LBS, OR APPROVED EQUAL. COVER SHALL BE MARKED WITH "SEWER" IN THE CENTER. (2120)
3. CONSTRUCT WATER PIPE PER TRENCH DETAIL 2/05-CD-09.
4. CAP AND ABANDON AFTER OPERATIONAL COMPLETION OF PS-A.
5. THE CONTRACTOR SHALL COMPLY WITH THE GENERAL CIVIL NOTES AND PERMITTING GENERAL NOTES.
6. CONSTRUCT GRAVITY SS PIPELINES PER TRENCH DETAIL 3/05-CD-09.
7. CONSTRUCT DUAL FM-1 AND FM-2 PIPELINES PER TRENCH DETAIL 2/05-CD-05. REFERENCE PLAN AND PROFILE DRAWINGS FOR MATERIAL SIZE AND CLASS.
8. CONNECTION TO EXISTING 30" SS SHALL NOT BE MADE UNTIL AFTER JUNE 2021 AFTER CAYUCOS IS NO LONGER CONVEYING SEWAGE TO THE EXISTING WWTP.
9. EXTEND TRACER WIRE ALONG FM2 PIPELINE TO PS-A. INSTALL TRACER WIRE TERMINAL (2060) AND GROUND ROD (16410)
10. HIGH PRIORITY UTILITY VERIFICATION REQUIRED FOR EXISTING 8" SS FROM DESAL FACILITY. 8" SS TO BE KEPT IN SERVICE DURING CONSTRUCTION.
11. HIGH PRIORITY UTILITY VERIFICATION REQUIRED FOR EXISTING DESAL MANHOLE. CONTRACTOR TO LOCATE AND EXPOSE UPPERMOST MANHOLE BARREL AND RELOCATE FM1 AND FM2 WESTWARD AS NECESSARY.
12. CONTRACTOR SHALL HOLD EXISTING UTILITY POLE DURING CONSTRUCTION.
13. HIGH PRIORITY UTILITY VERIFICATION REQUIRED FOR EXISTING 6" SS. CONTRACTOR SHALL VERIFY EXISTING SS ALIGNMENT, MH CONNECTION POINTS AND KEPT IN SERVICE. CONTRACTOR SHALL RELOCATE 12" SD AND 1" W AS NEEDED TO SATISFY 10'-0" SEPARATION FROM SS AND 4'-0" FROM SD.
14. MH CONNECTION SHALL BE MADE AFTER OPERATIONAL COMPLETION OF THE PUMP STATION.

10 0 10 20 FEET
SCALE 1"=10'

REGISTERED PROFESSIONAL ENGINEER
KRISTA-MARIE A. KRIS
No. C70952
CIVIL
STATE OF CALIFORNIA
05/29/2020

DESIGN K. ALACON
DRAWN L. CHAPMAN
CHECKED K. ALACON
APPROVED M. FISHER

WATERWORKS ENGINEERS
2260 Douglas Blvd, Suite 105 • Roseville, CA 95661 • 916-780-2888

CITY OF MORRO BAY
WATER RECLAMATION FACILITY
LIFT STATION AND OFFSITE PIPELINES

CIVIL
PUMP STATION A YARD PIPING PLAN

DATE MAY 2020
PROJECT NUMBER 17-082
DRAWING NUMBER 10-Y-1
SHEET NUMBER 131

L:\CAD\PROJECTS\17-082 MORRO BAY PS AND PIPELINE_{S}\PROJECT FILES\DELIVERABLES\1782D-10Y100.DWG

JOB NUMBER: 00-000 FILENAME: 1782D-10Y100.DWG PLOT DATE: 06/15/20 PLOT TIME: 10:35:51

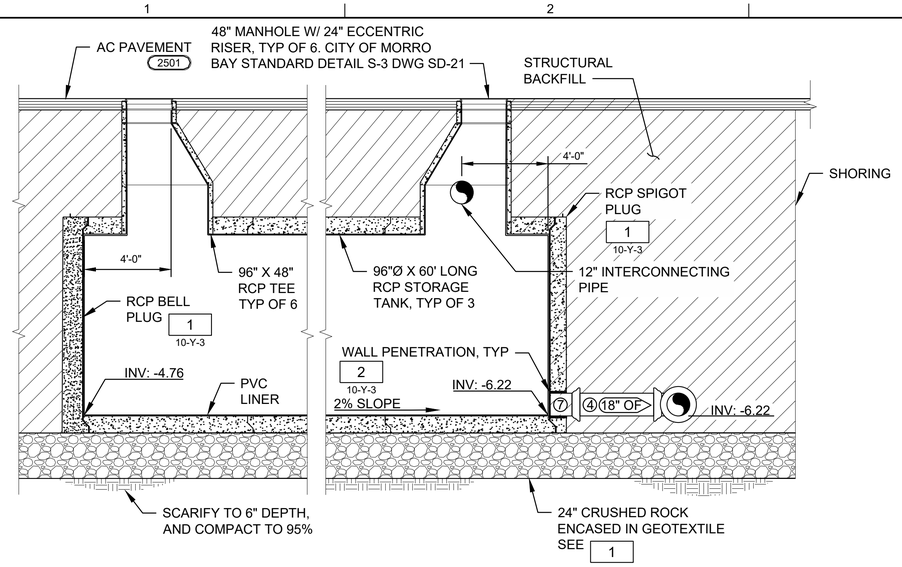

A SECTION
10-Y-1 NTS

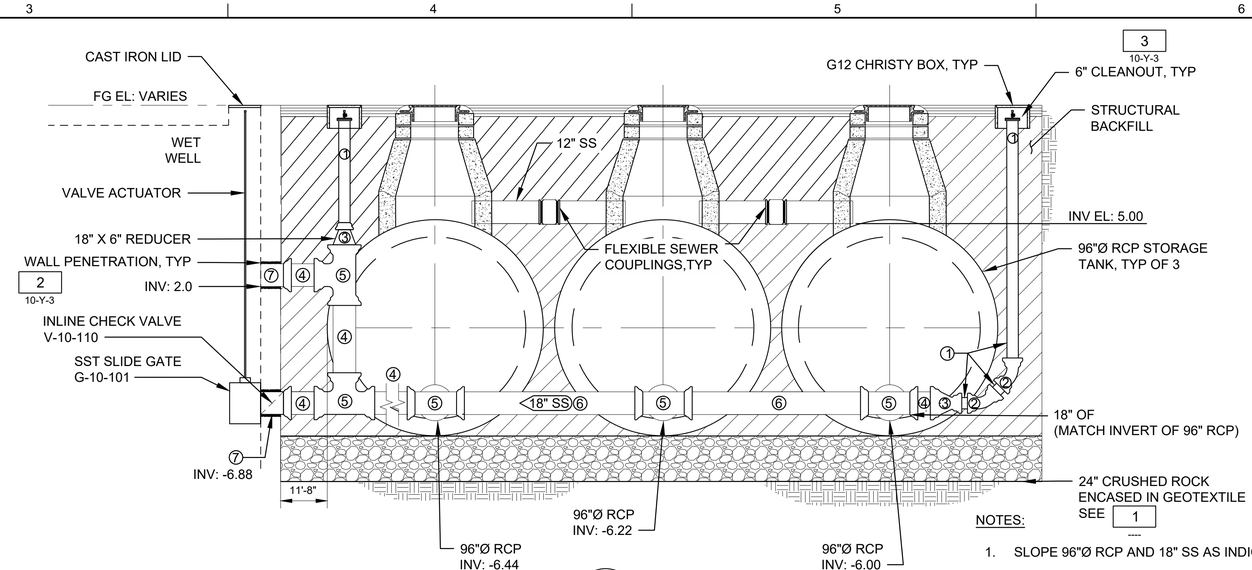

B SECTION
10-Y-1 NTS

NOTES:

1. SLOPE 96"Ø RCP AND 18" SS AS INDICATED.
2. GRAVITY FLOW PIPES SHALL BE PVC SDR 26 UNLESS NOTED OTHERWISE.

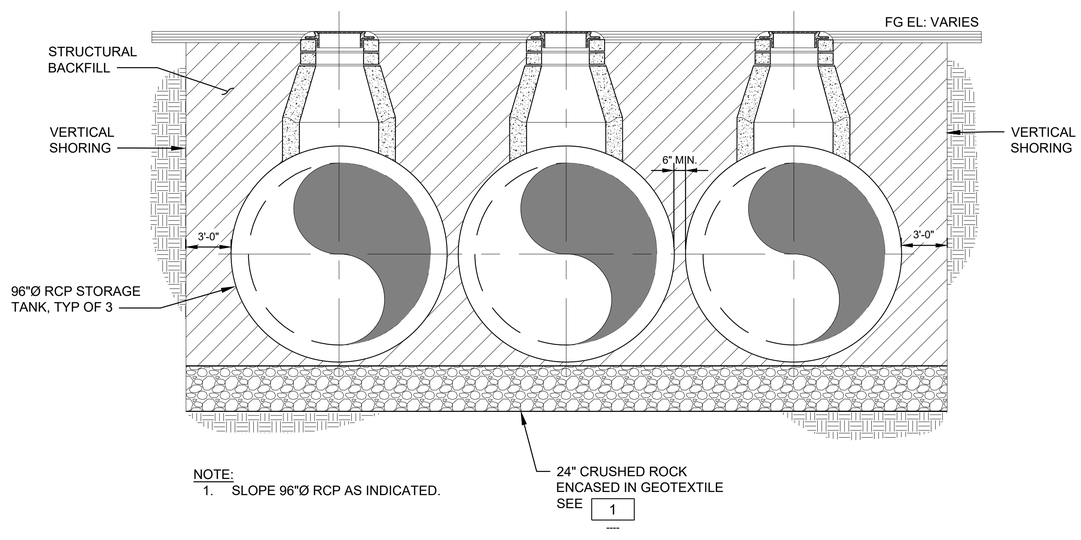

NOTE:
1. SLOPE 96"Ø RCP AS INDICATED.

C SECTION
10-Y-1 NTS

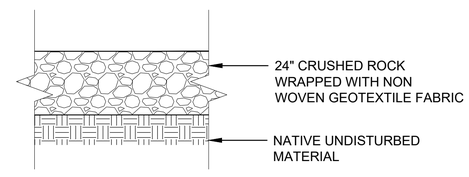

NOTE:
USE BASE STABILIZATION WHERE DIRECTED BY THE ENGINEER

1 BASE STABILIZATION DETAIL
--- NTS

KEY NOTES:

1. 8" SDR-26 PIPE, PE X PE
2. 8" SDR 26 45° ELBOW, BELL
3. 8" X 18" SDR 26 CONCENTRIC REDUCER, BELL
4. 18" SDR 26 PIPE, PE X PE
5. 18" SDR 26 TEE, BELL
6. 18" SDR 26 PIPE, PE X PE
7. 18" SDR 26 PIPE, PE X BELL

REGISTERED PROFESSIONAL ENGINEER MICHAEL P. FISHER No. C 67194 CIVIL STATE OF CALIFORNIA
05/29/2020

DESIGN K ALACON
DRAWN P WEBSTER
CHECKED M FISHER
APPROVED M FISHER

WATERWORKS ENGINEERS
2260 Douglas Blvd, Suite 105 • Roseville, CA 95661 • 916-780-2888

CITY OF MORRO BAY
WATER RECLAMATION FACILITY LIFT STATION AND OFFSITE PIPELINES

CIVIL
EMERGENCY STORAGE PIPING

DATE MAY 2020
PROJECT NUMBER 17-082
DRAWING NUMBER 10-Y-2
SHEET NUMBER 132

L:\CAD\PROJECTS\17-082 MORRO BAY PS AND PIPELINE_(S)\PROJECT FILES\DELIVERABLES\1782D-10Y200.DWG

JOB NUMBER: 14-010 FILENAME: 1782D-10Y200.DWG PLOT DATE: 15-Jun-20 PLOT TIME: 10:36:24

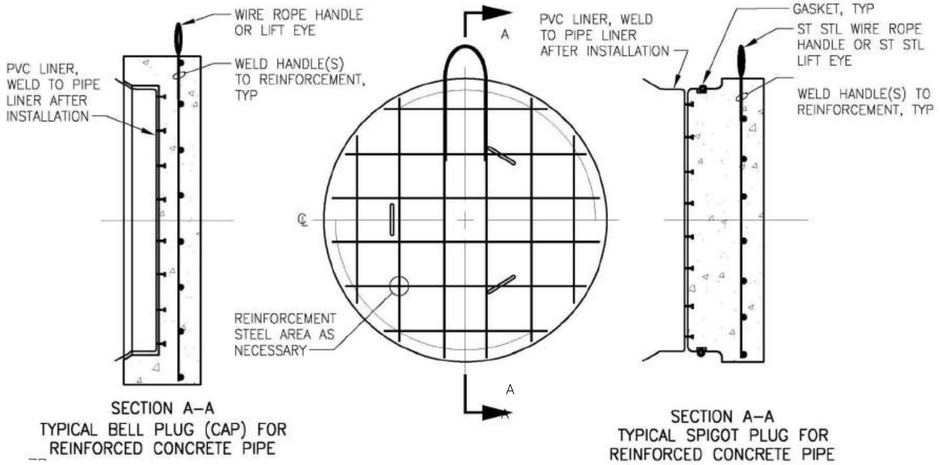

NOTES:

1. PLUG DESIGNED BY PIPE MANUFACTURER FOR WATER TIGHTNESS ONLY. FORCES RESULTING FROM INTERNAL PRESSURE TO BE RESISTED BY EXTERNAL CLSM AND BACKFILL UNIFORMLY DISTRIBUTED TO PREVENT MOVEMENT OR DISTORTION OF PLUG.
2. DESIGN PLUG FOR CLSM BEDDING
3. ALL STORAGE TANK PIPE JOINTS SHALL BE GASKETED

1 CONCRETE PIPE PLUGS DETAIL
10-Y-2 NTS

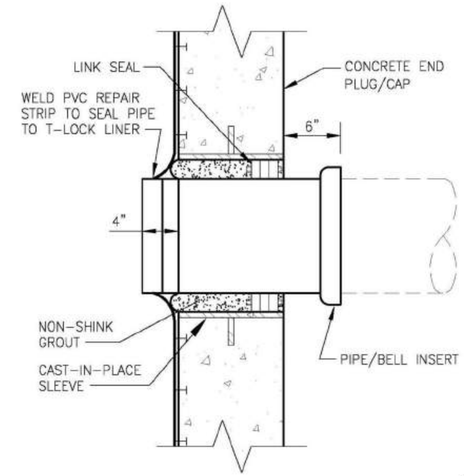

2 WALL PENETRATION DETAIL
10-Y-2 NTS

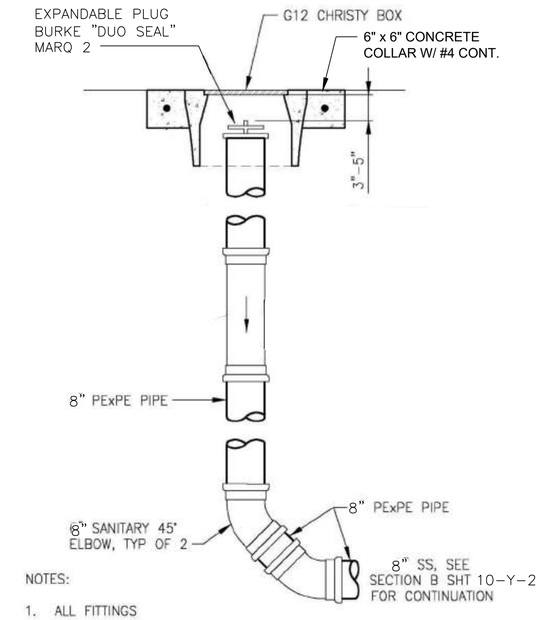

NOTES:

1. ALL FITTINGS ARE SDR 26 PVC.

3 8" FLUSHING CONNECTION DETAIL
10-Y-1 NTS

REGISTERED PROFESSIONAL ENGINEER
MICHAEL J. FISHER
No. C67194
CIVIL
STATE OF CALIFORNIA
05/29/2020

DESIGN K KALACON
DRAWN M TRUITT
CHECKED M FISHER
APPROVED M FISHER

WATERWORKS ENGINEERS
2260 Douglas Blvd, Suite 105 • Roseville, CA 95661 • 916-780-2888

CITY OF MORRO BAY
WATER RECLAMATION FACILITY
LIFT STATION AND OFFSITE PIPELINES

CIVIL
EMERGENCY STORAGE PIPING DETAILS

DATE MAY 2020
PROJECT NUMBER 17-082
DRAWING NUMBER 10-Y-3
SHEET NUMBER 133

L:\CAD\PROJECTS\17-082 MORRO BAY PS AND PIPELINE_{S}\PROJECT FILES\DELIVERABLES\1782D-10Y201.DWG

JOB NUMBER: 14-010 FILENAME: 1782D-10Y201.DWG PLOT DATE: 15-Jun-20 PLOT TIME: 10:36:58

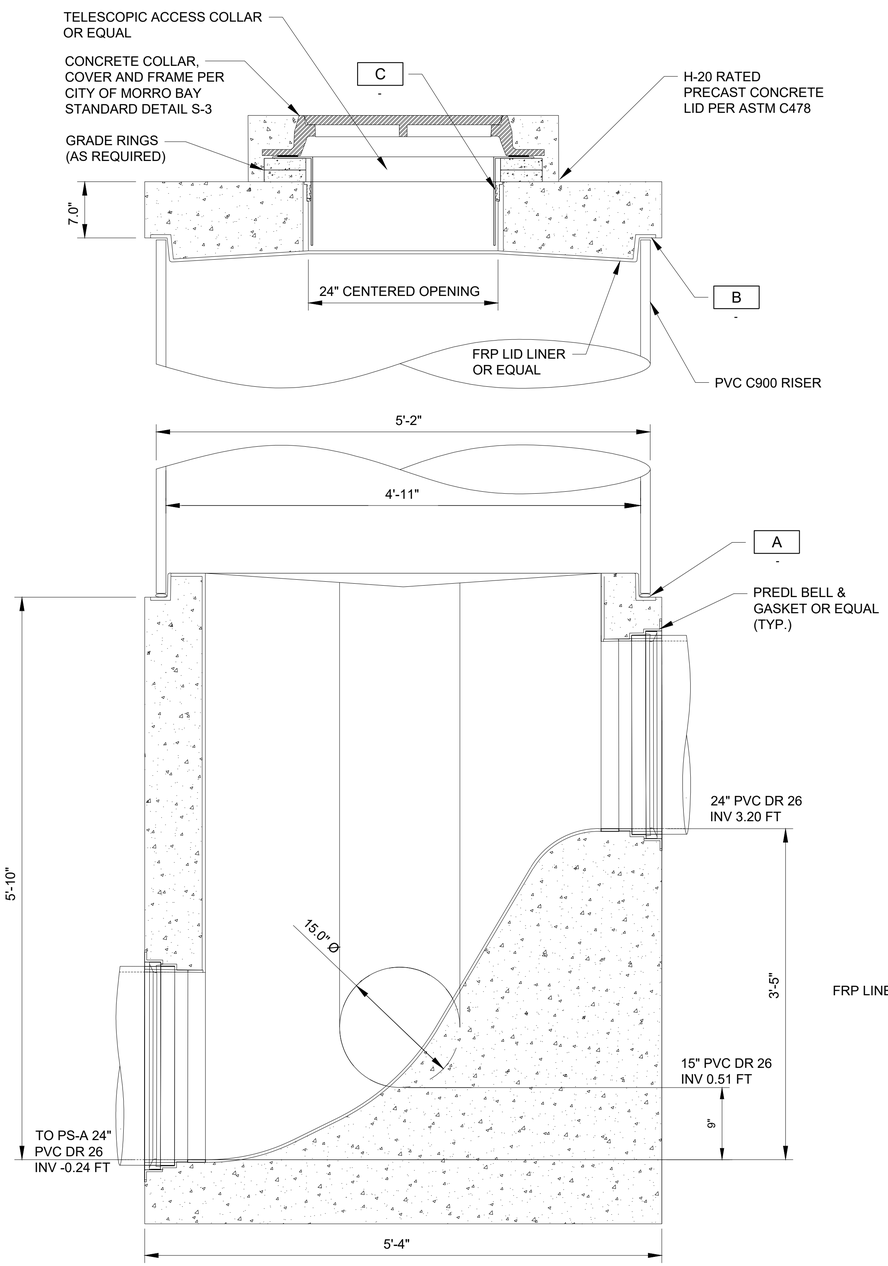

A - SECTION
1:20

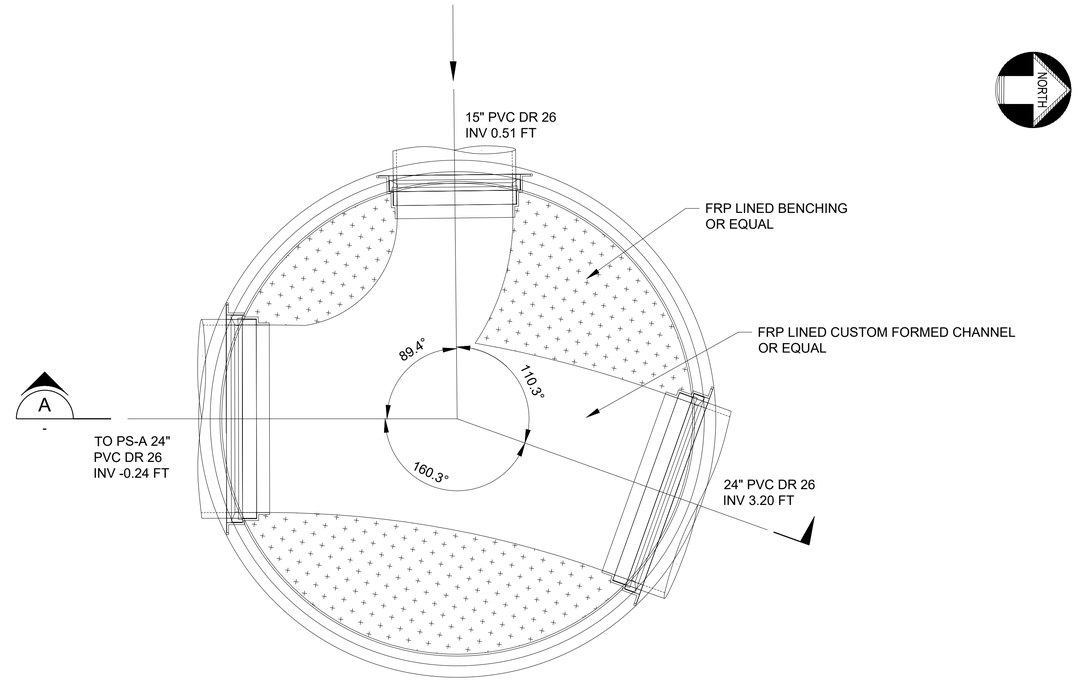

JUNCTION MANHOLE PLAN
10-Y-1

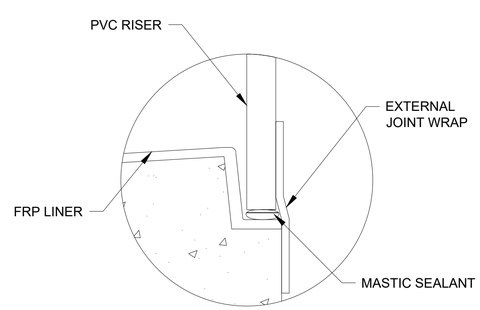

A - JOINT DETAIL
NTS

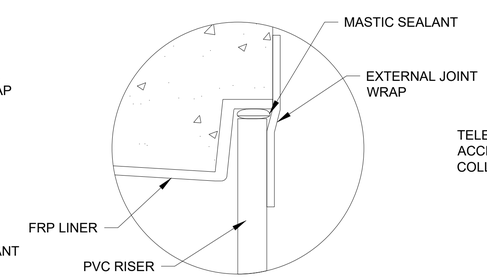

B - JOINT DETAIL
NTS

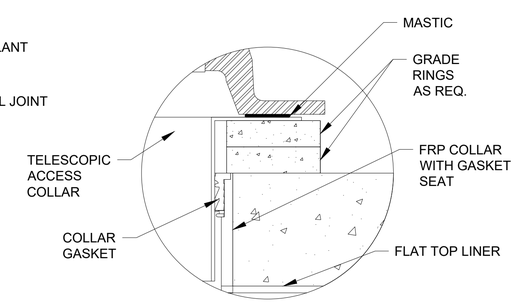

C - JOINT DETAIL
NTS

REGISTERED PROFESSIONAL ENGINEER
MICHAEL J. FISHER
No. C067194
CIVIL
STATE OF CALIFORNIA
05/29/2020

DESIGN K ALACON
DRAWN K ALACON
CHECKED M FISHER
APPROVED M FISHER

WATERWORKS ENGINEERS
2260 Douglas Blvd, Suite 105 •Roseville, CA 95661 • 916-790-2888

CITY OF MORRO BAY
WATER RECLAMATION FACILITY
LIFT STATION AND OFFSITE PIPELINES

CIVIL
PS-A JUNCTION MANHOLE DETAILS

DATE MAY 2020
PROJECT NUMBER 17-082
DRAWING NUMBER 10-Y-4
SHEET NUMBER 134

L:\CAD\PROJECTS\17-082 MORRO BAY PS AND PIPELINE_(S)\PROJECT FILES\DELIVERABLES\1782D-10Y400.DWG

JOB NUMBER: 14-010 FILENAME: 1782D-10Y400.DWG PLOT DATE: 15-Jun-20 PLOT TIME: 10:37:28

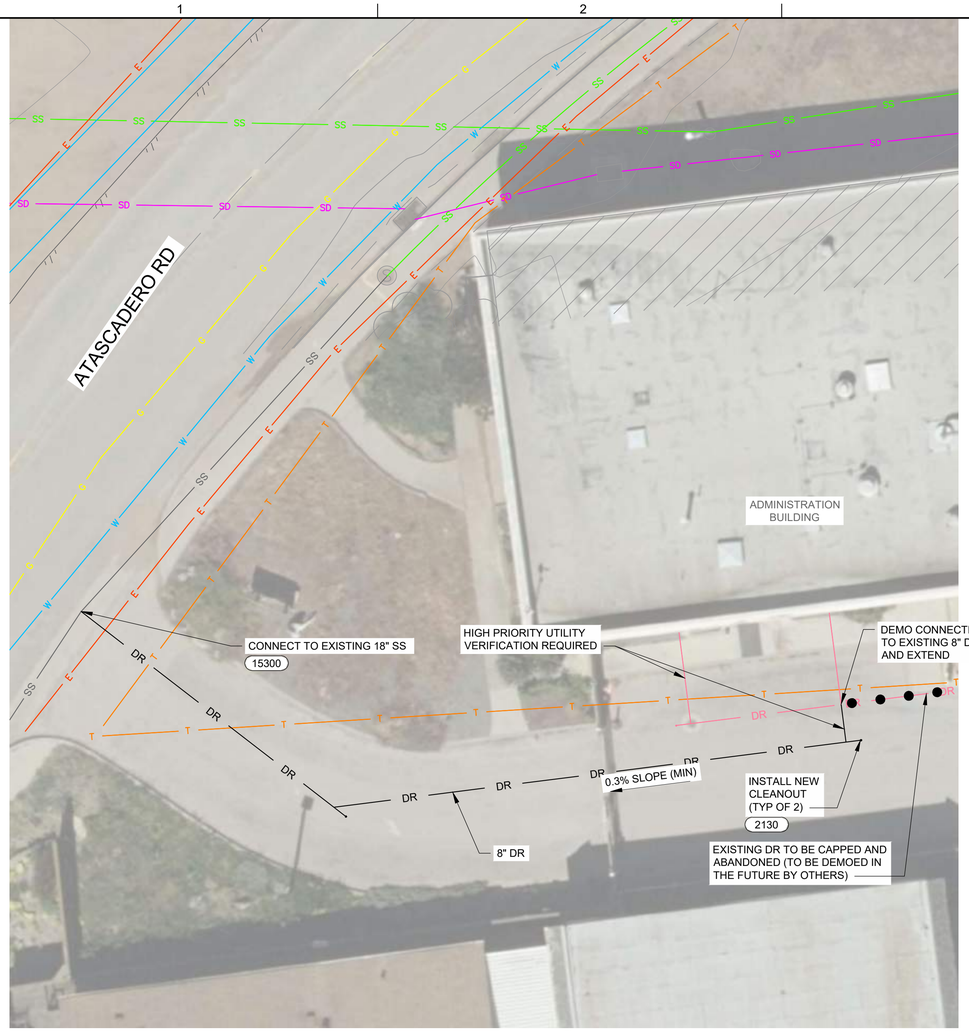

ADMINISTRATION BUILDING DRAIN PLAN

1"=10'

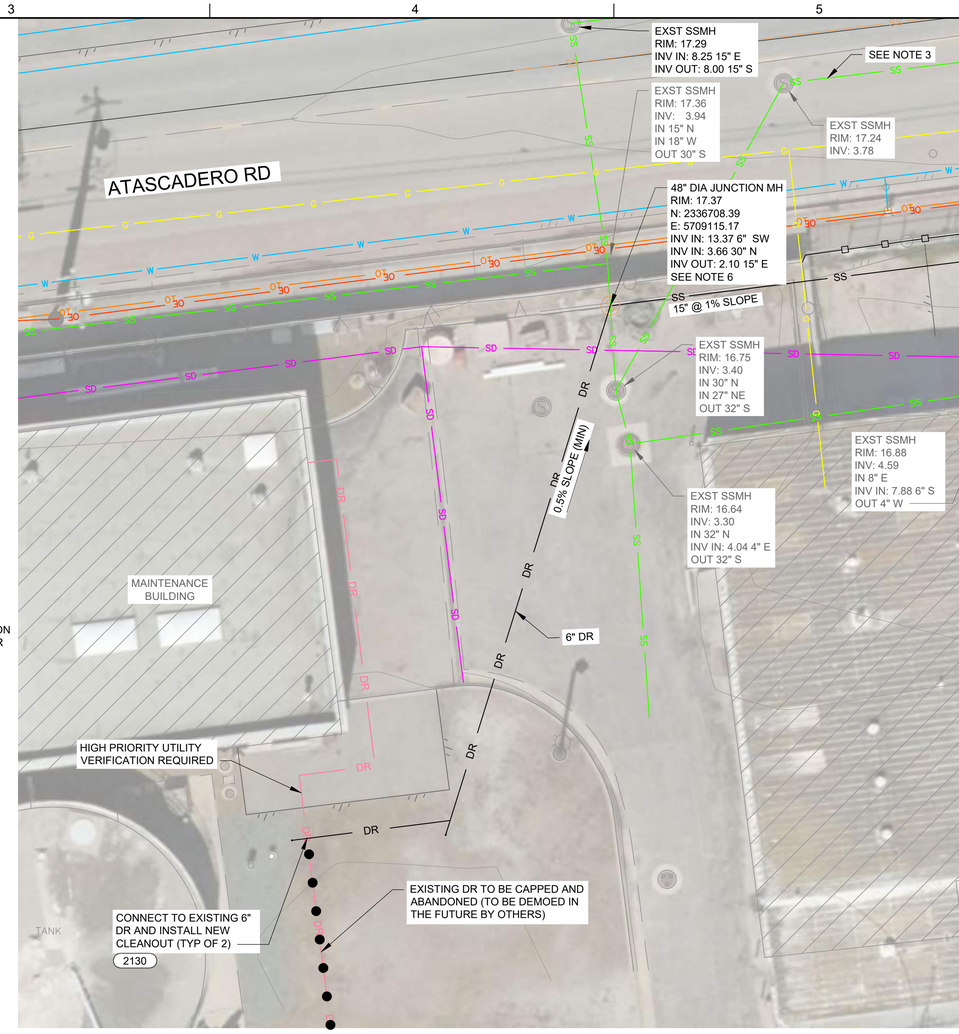

MAINTENANCE BUILDING DRAIN PLAN

1"=10'

NORTH

NOTES:

1. SEWER MANHOLES SHALL BE PER CITY OF MORRO BAY STANDARD DETAIL S-3 UNLESS OTHERWISE NOTED.
2. SEWER MANHOLE FRAME AND COVER SHALL BE PINKERTON NO. A-107, WEIGHT 264 LBS, OR APPROVED EQUAL. COVER SHALL BE MARKED WITH "SEWER" IN THE CENTER. (2120)
3. 27" SS TO BE CAPPED AND ABANDONED AFTER SUBSTANTIAL COMPLETION OF PS-A.
4. THE CONTRACTOR SHALL COMPLY WITH THE GENERAL CIVIL NOTES AND PERMITTING GENERAL NOTES.
5. CONSTRUCT DRAIN PIPELINES PER TRENCH DETAIL 3/05-CD-09.
6. CONNECTION TO EXISTING 30" SS SHALL NOT BE MADE UNTIL JUNE 2021.

10 0 10 20 FEET
SCALE 1"=10'

REGISTERED PROFESSIONAL ENGINEER
KRISTA-MARIE R. ALACON
No. C70952
CIVIL
STATE OF CALIFORNIA
05/29/2020

DESIGN K. ALACON
DRAWN M. TRUITT
CHECKED K. ALACON
APPROVED M. FISHER

WATERWORKS ENGINEERS
2260 Douglas Blvd, Suite 105 • Roseville, CA 95661 • 916-780-2888

CITY OF MORRO BAY
WATER RECLAMATION FACILITY
LIFT STATION AND OFFSITE PIPELINES

CIVIL
PS-A YARD PIPING PLAN

DATE MAY 2020
PROJECT NUMBER 17-082
DRAWING NUMBER 10-Y-5
SHEET NUMBER 135

L:\CAD\PROJECTS\17-082 MORRO BAY PS AND PIPELINE_{S}\PROJECT FILES\DELIVERABLES\1782D-10Y500.DWG

JOB NUMBER: 00-000 FILENAME: 1782D-10Y500.DWG PLOT DATE: 06/15/20 PLOT TIME: 10:38:04

NOTES:

1. RENDERING IS FOR INFORMATIONAL PURPOSES ONLY. NOT FOR CONSTRUCTION.

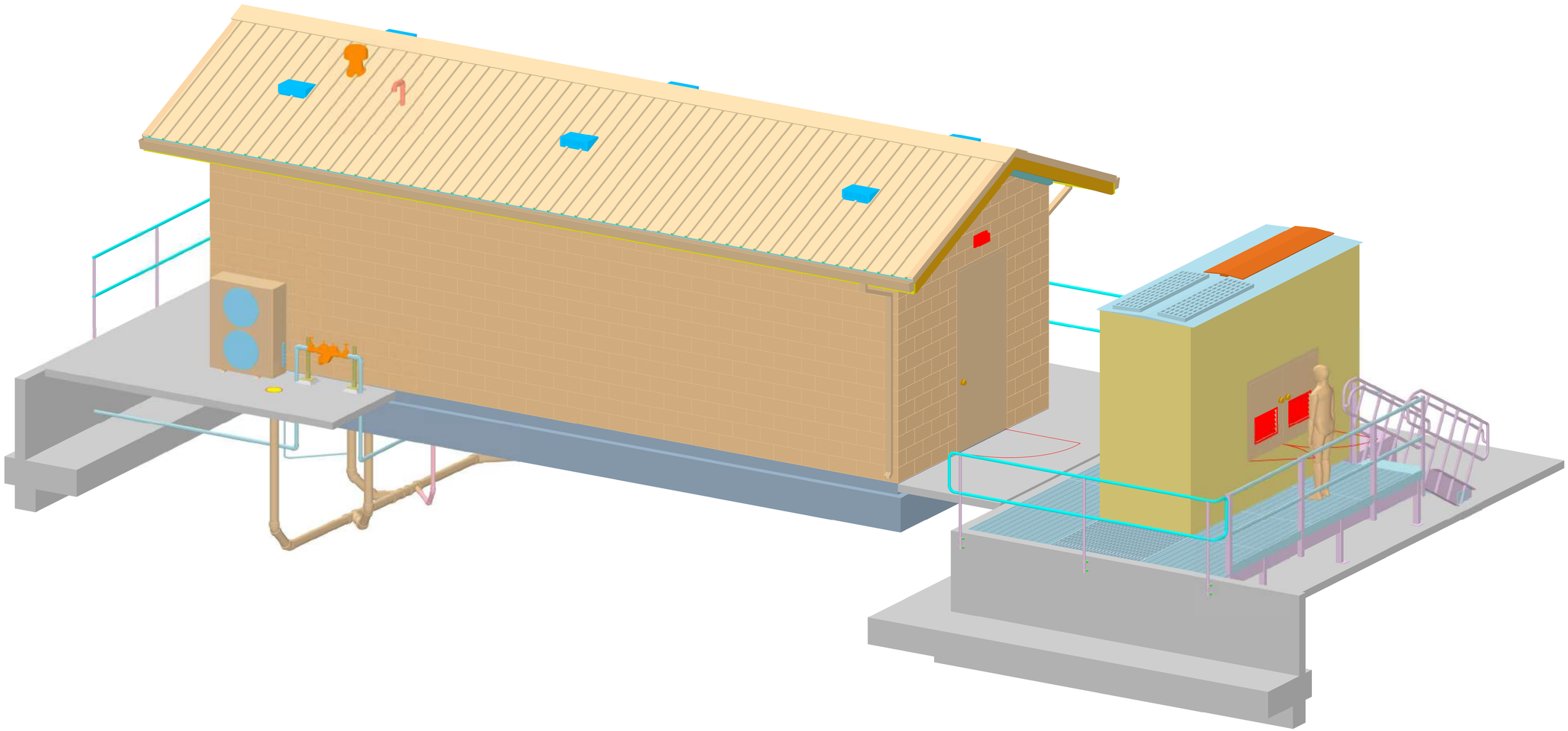

RENDERING

NTS

DESIGNED K ALACON
DRAWN J MARTIN
CHECKED K ALACON
APPROVED M FISHER

WATERWORKS ENGINEERS
2260 Douglas Blvd., Suite 105 • Roseville, CA 95661 • 916-780-2888

CITY OF MORRO BAY
WATER RECLAMATION FACILITY
LIFT STATIONS AND OFFSITE PIPELINES

RENDERING
ELECTRICAL BUILDING RENDERING

REGISTERED PROFESSIONAL ENGINEER
ARGENTINA P. ALACON
No. C70952
CIVIL
STATE OF CALIFORNIA
05-29-2020

DATE MAY 2020
PROJECT NUMBER 17-082
DRAWING NUMBER 10-R-1
SHEET NUMBER 136

FILENAME: 1782D-10R801.DGN PLOT DATE: 5/28/2020 6:25:48 AM

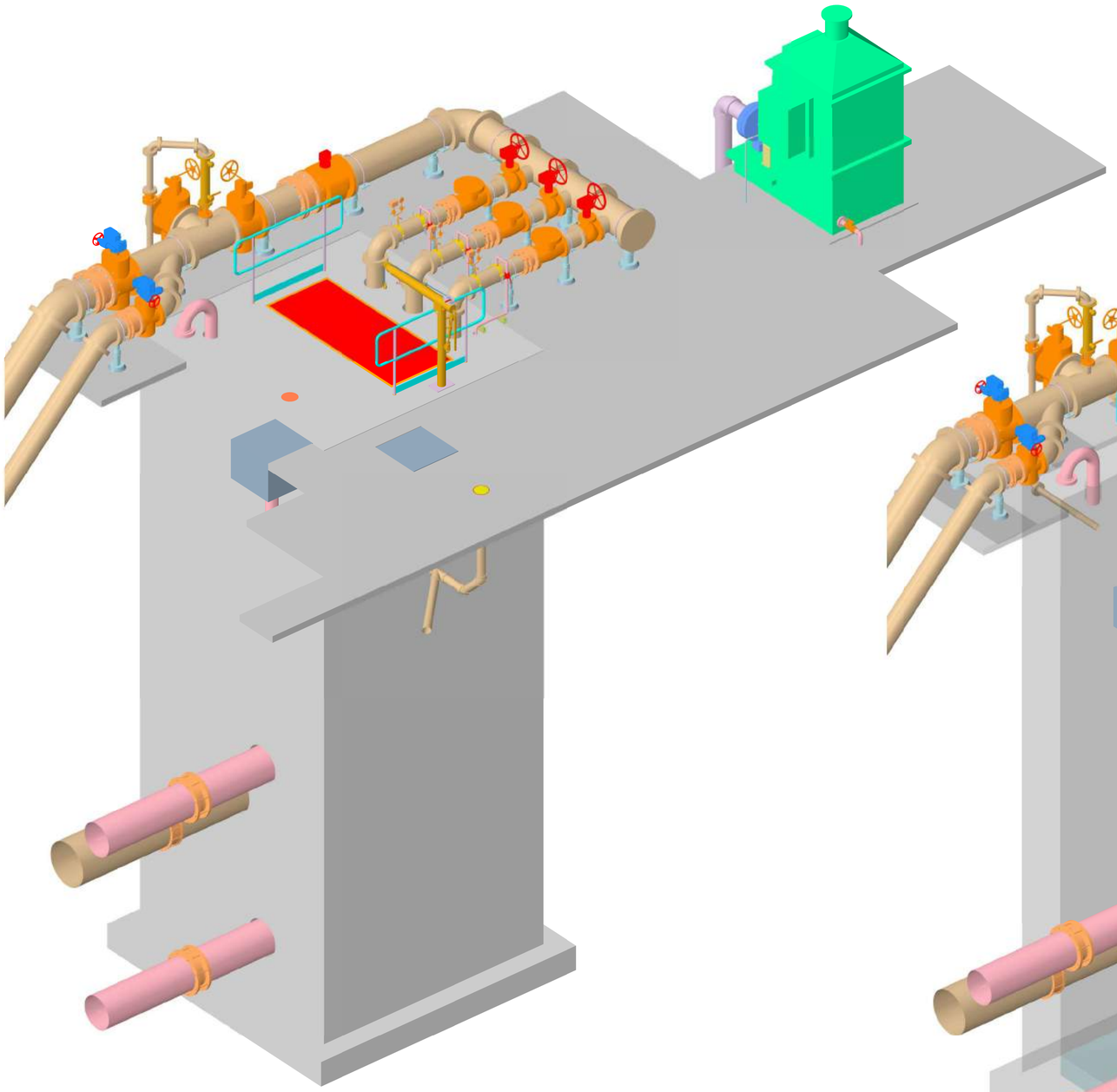

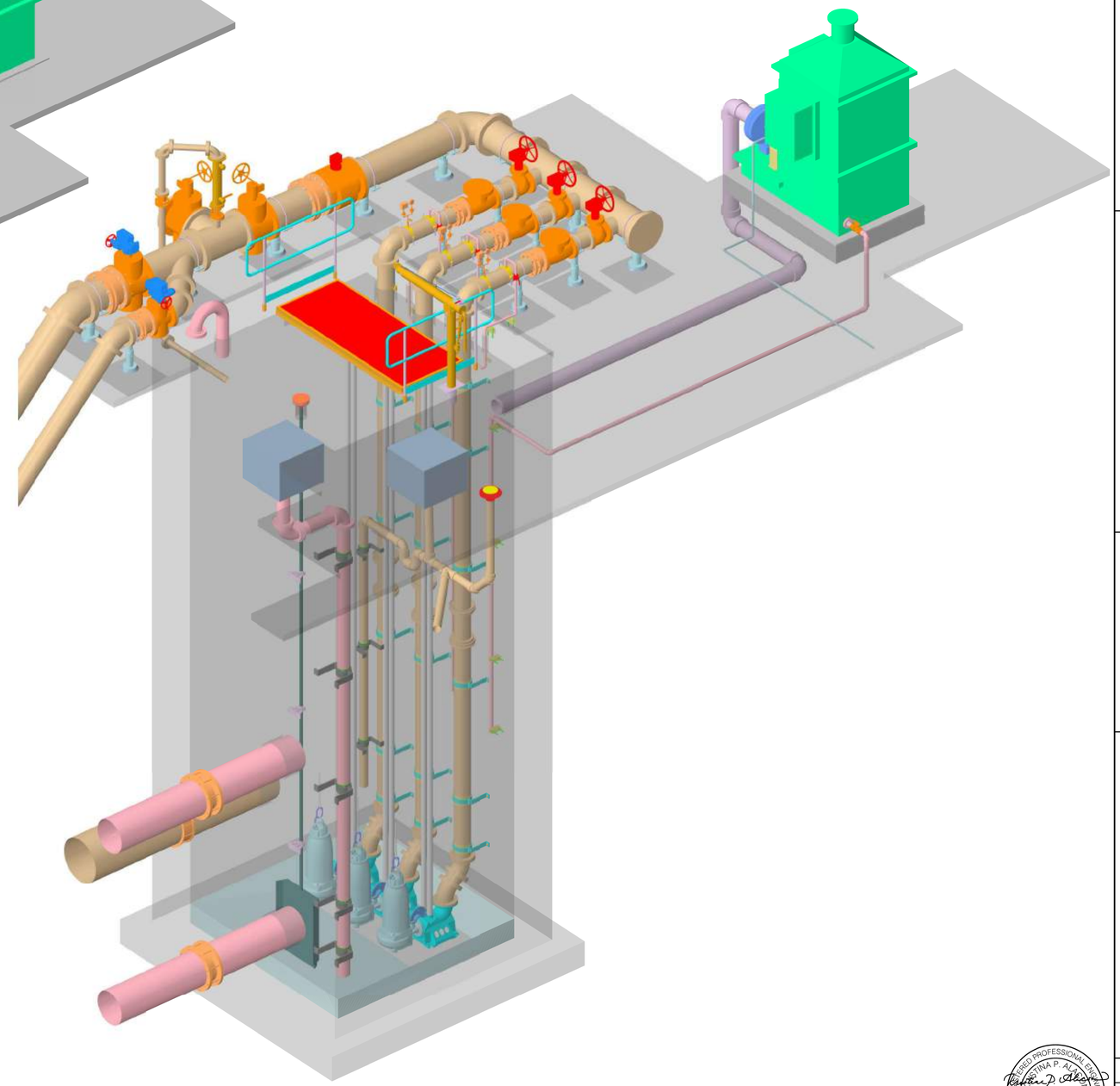

NOTES:

1. RENDERINGS ARE FOR INFORMATIONAL PURPOSES ONLY. NOT FOR CONSTRUCTION.

RENDERINGS

NTS

REGISTERED PROFESSIONAL ENGINEER
KRISTINA P. ALACON
No. C70952
CIVIL
STATE OF CALIFORNIA
05-29-2020

DESIGNED K ALACON
DRAWN J MARTIN
CHECKED K ALACON
APPROVED M FISHER

WATERWORKS ENGINEERS
2260 Douglas Blvd., Suite 105 • Roseville, CA 95661 • 916-780-2888

CITY OF MORRO BAY
WATER RECLAMATION FACILITY
LIFT STATIONS AND OFFSITE PIPELINES

RENDERING
PUMP STATION A RENDERINGS

DATE MAY 2020
PROJECT NUMBER 17-082
DRAWING NUMBER 10-R-2
SHEET NUMBER 137

FILENAME: 1782D-10R802.DGN PLOT DATE: 5/28/2020 6:26:49 AM

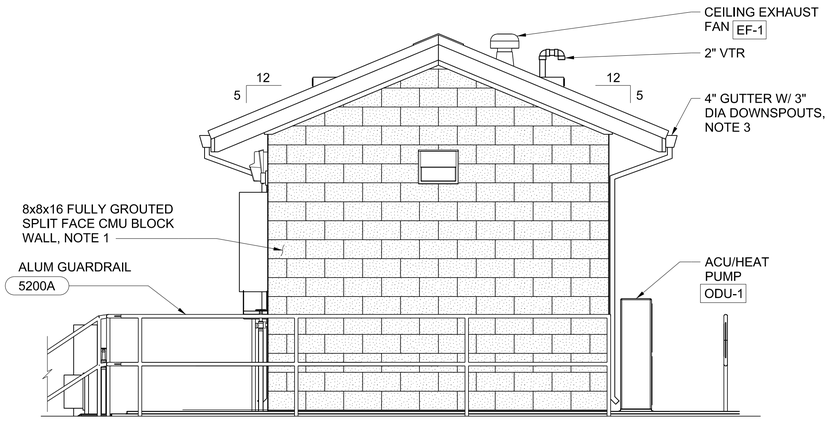

A 10-AS-2 NORTH ELEVATION
3/8" = 1'-0"

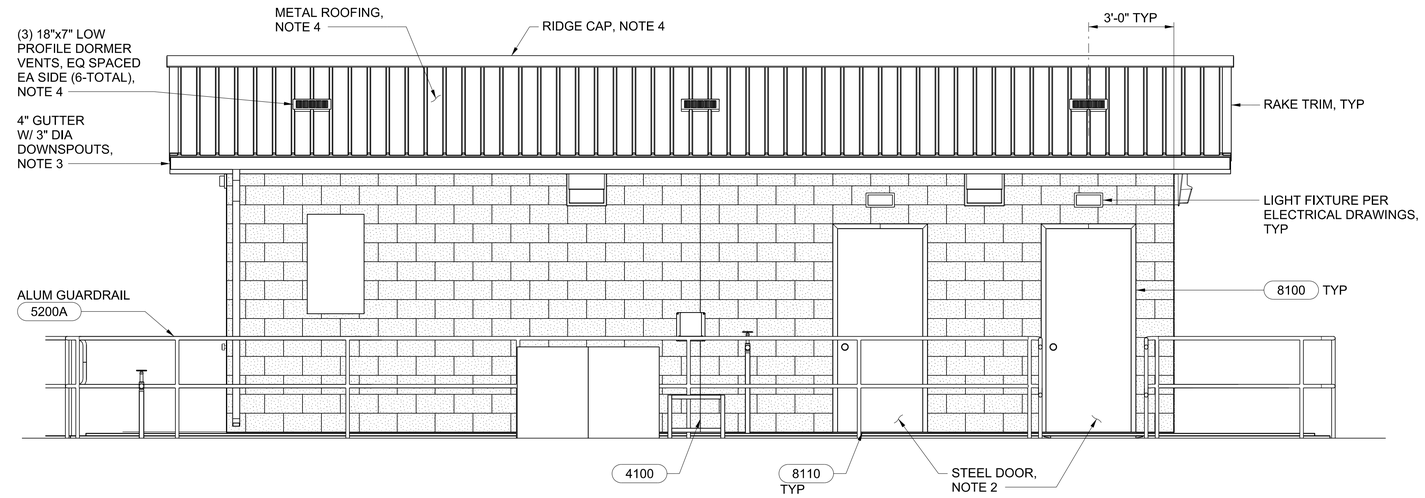

B 10-AS-2 EAST ELEVATION
3/8" = 1'-0"

BUILDING CODE DATA	
BUILDING CODE	2016 CBC
OCCUPANCY CLASSIFICATION	F-1
HAZARDOUS MATERIALS	NONE
TYPE OF CONSTRUCTION	V-B
FIRE SUPRESSION	FIRE EXTINGUISHERS
NUMBER OF STORIES ABOVE GRADE	1 ACTUAL 1 ALLOWABLE (F-1 OCCUPANCY)
BUILDING HEIGHT ABOVE GRADE	13'-2" ACTUAL 40'-0" ALLOWABLE
BUILDING AREAS	341 SQFT
OCCUPANT LOAD FACTOR	100 SQFT/PERSON
OCCUPANT LOAD	3 PERSONS
TRAVEL DISTANCE	16'-8" MAX ACTUAL 175'-0" ALLOWABLE

NOTES:

1. COLOR TO MATCH EXISTING FACILITIES, ANGELUS "HARVEST" SPLIT FACE CMU BLOCK, OR EQUAL. SUBMIT COLOR SAMPLE TO OWNER FOR APPROVAL PRIOR TO CONSTRUCTION.
2. STEEL DOOR COLOR TO MATCH EXISTING FACILITIES, DARK BROWN. SUBMIT COLOR SAMPLE TO OWNER FOR APPROVAL PRIOR TO CONSTRUCTION.
3. PAINT GUTTERS AND DOWNSPOUTS DARK BROWN TO MATCH STEEL DOORS AND METAL ROOFING.
4. METAL ROOFING, RIDGE CAP, FLASHING, ETC TO MATCH EXISTING FACILITIES, DARK BROWN. SUBMIT COLOR SAMPLE TO OWNER FOR APPROVAL PRIOR TO CONSTRUCTION.

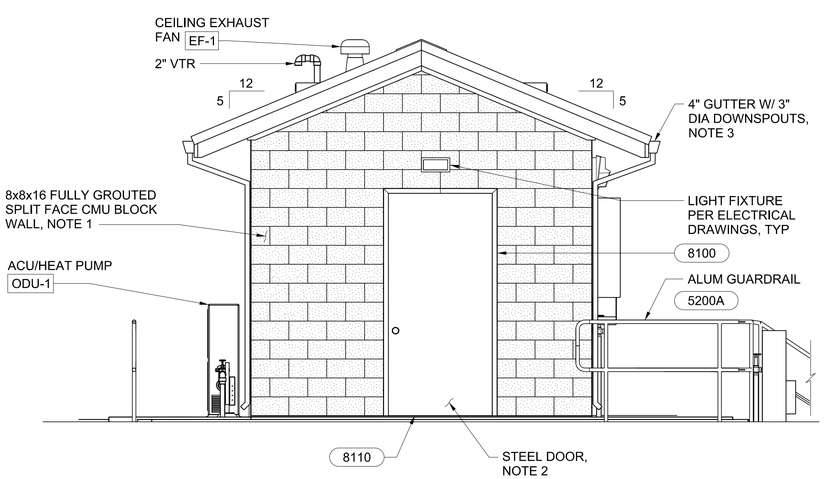

C 10-AS-2 SOUTH ELEVATION
3/8" = 1'-0"

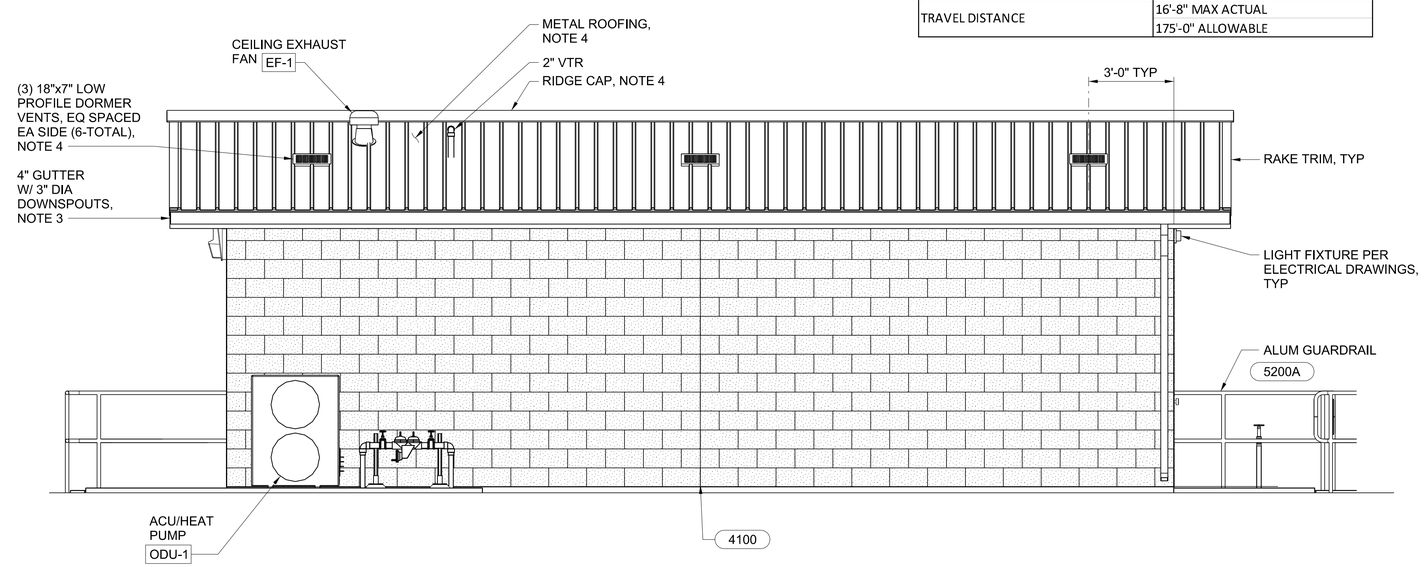

D 10-AS-2 WEST ELEVATION
3/8" = 1'-0"

2 0 2 4 FEET
SCALE 1/2"=1'-0"

REGISTERED PROFESSIONAL ENGINEER ANDREW L. LINDEMAN No. C88058 CIVIL STATE OF CALIFORNIA
05-29-2020

DESIGNED A LINDEMAN
DRAWN J MARTIN
CHECKED J KELLOGG
APPROVED M FISHER

WATERWORKS ENGINEERS
2260 Douglas Blvd., Suite 105 • Roseville, CA 95661 • 916-780-2888

CITY OF MORRO BAY
WATER RECLAMATION FACILITY
LIFT STATIONS AND OFFSITE PIPELINES

ARCHITECTURAL / STRUCTURAL
PUMP STATION A
ELECTRICAL BUILDING
ELEVATIONS

DATE MAY 2020
PROJECT NUMBER 17-082
DRAWING NUMBER 10-AS-1
SHEET NUMBER 138

FILENAME: 1782D-10AS401.DGN PLOT DATE: 5/28/2020 6:37:12 AM

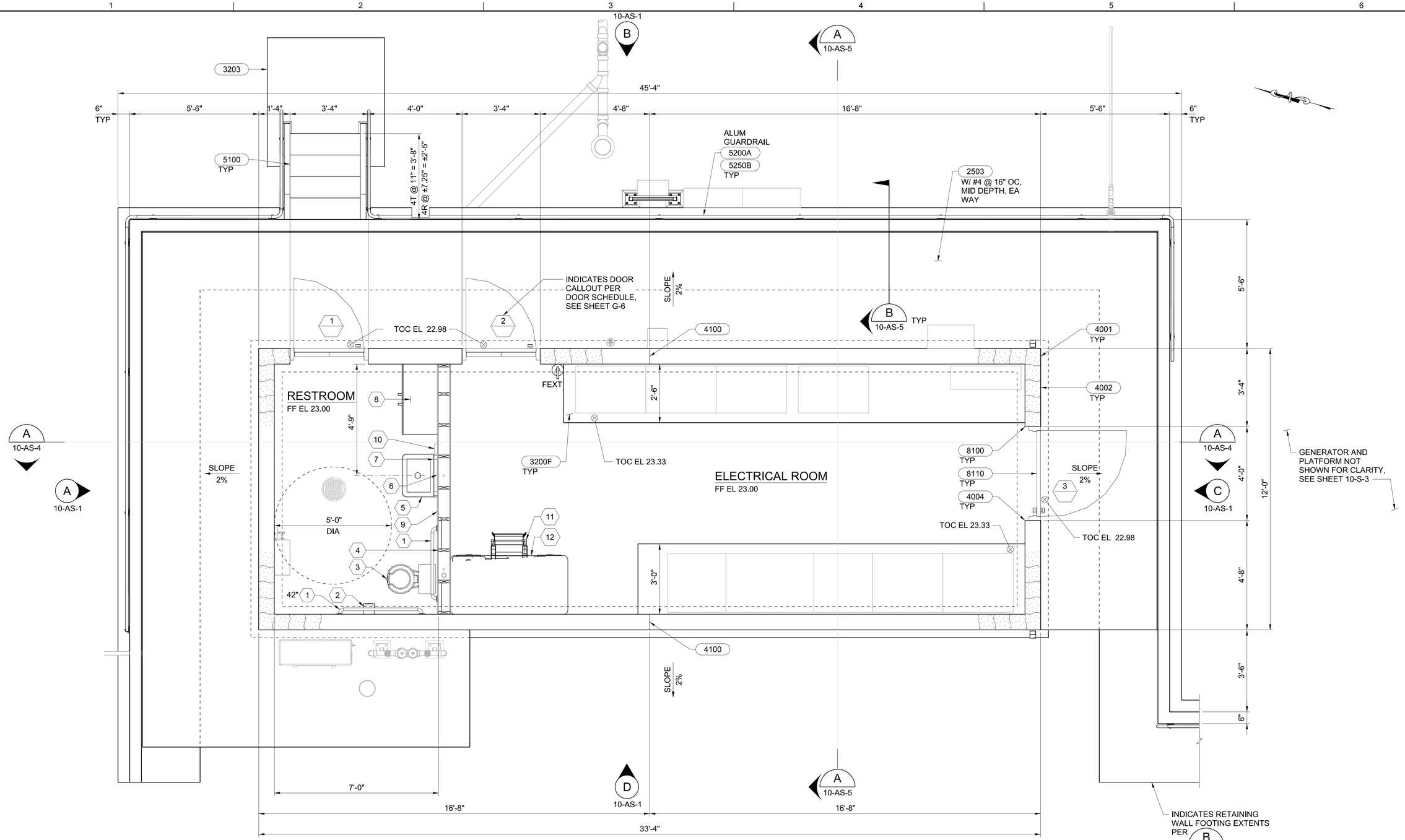

FURNISHINGS SCHEDULE

1	GRAB BAR, PROVIDE BLOCKING IN WOOD FRAMING WALL	5	UTILITY SINK US-01	9	SOAP DISPENSER RA-03	NOTES: FOR ADDITIONAL FURNISHING REQUIREMENTS, SEE DETAIL 10100.
2	TOILET PAPER DISPENSER RA-02	6	MIRROR, 24"x36"	10	INSTANT WATER HEATER IHW-01	
3	FLOOR MOUNTED WATER CLOSET WC-01	7	PAPER TOWEL DISPENSER RA-01	11	CHAIR	
4	SEAT COVER DISPENSER	8	STORAGE CABINET SC-01	12	DESK, 60"x30"	

PUMP STATION A ELECTRICAL BUILDING FLOOR PLAN

1/2" = 1'-0"

2 0 2 4 FEET
SCALE 1/2"=1'-0"

REGISTERED PROFESSIONAL ENGINEER ANDREW L. LINDEMAN No. C88058 CIVIL STATE OF CALIFORNIA
05-29-2020

DESIGNED A LINDEMAN
DRAWN J MARTIN
CHECKED J KELLOGG
APPROVED M FISHER

WATERWORKS ENGINEERS
2260 Douglas Blvd., Suite 105 • Roseville, CA 95661 • 916-780-2888

CITY OF MORRO BAY
WATER RECLAMATION FACILITY
LIFT STATIONS AND OFFSITE PIPELINES

ARCHITECTURAL / STRUCTURAL
PUMP STATION A ELECTRICAL BUILDING PLAN

DATE MAY 2020
PROJECT NUMBER 17-082
DRAWING NUMBER 10-AS-2
SHEET NUMBER 139

FILENAME: 1782D-10AS101.DGN PLOT DATE: 5/28/2020 6:33:38 AM

NOTES:

1. 19/32 PLYWD SHTG, CDX APA RATED EXPOSURE 1. NAIL DIAPH WITH 10d @ 6" OC AT ALL SUPPORTED PANEL EDGES AND DIAPH BOUNDARY, 12" OC IN FIELD. UNBLOCKED.
2. PROVIDE 2x6 TOP CHORD AT WOOD TRUSSES. SEE SECTION 06100 FOR DESIGN CRITERIA AND SUBMITTAL REQUIRMENTS.

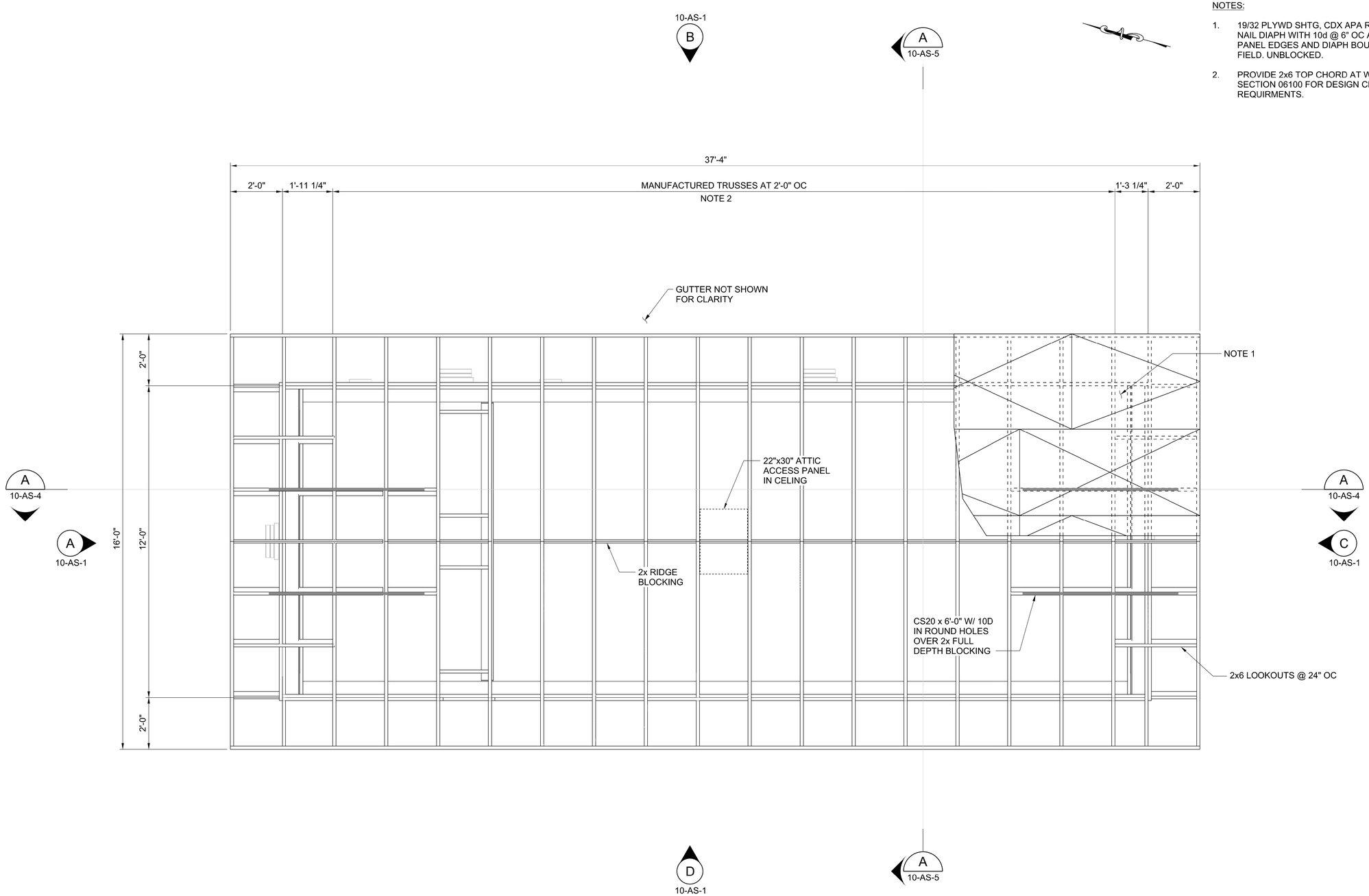

ROOF FRAMING PLAN

1/2" = 1'-0"

2 0 2 4 FEET

SCALE 1/2"=1'-0"

REGISTERED PROFESSIONAL ENGINEER ANDREW L. LINDEMAN No. C88058 CIVIL STATE OF CALIFORNIA 05-29-2020

DESIGNED A LINDEMAN
DRAWN J MARTIN
CHECKED J KELLOGG
APPROVED M FISHER

WATERWORKS ENGINEERS
2260 Douglas Blvd., Suite 105 • Roseville, CA 95661 • 916-780-2888

CITY OF MORRO BAY
WATER RECLAMATION FACILITY
LIFT STATIONS AND OFFSITE PIPELINES

ARCHITECTURAL / STRUCTURAL
PUMP STATION A
ELECTRICAL BUILDING
ROOF FRAMING PLAN

DATE MAY 2020
PROJECT NUMBER 17-082
DRAWING NUMBER 10-AS-3
SHEET NUMBER 140

FILENAME: 1782D-10AS102.DGN PLOT DATE: 5/28/2020 7:26:09 AM

NOTES:

1. INSTALL EDGE TRIM WHERE GYPSUM WALL BOARD ABUTS ANOTHER MATERIAL AT WALLS AND CEILING. PROVIDE JOINT SEALANT BETWEEN TRIM AND OTHER MATERIAL PRIOR TO PAINTING.

2. FASTEN GYPSUM WALL BOARD TO 2x STUDS W/ NO. 6x1 1/4" TYPE S OR W DRYWALL SCREWS @ 12" OC @ PANEL EDGES & 16" OC IN FIELD, UNBLOCKED.

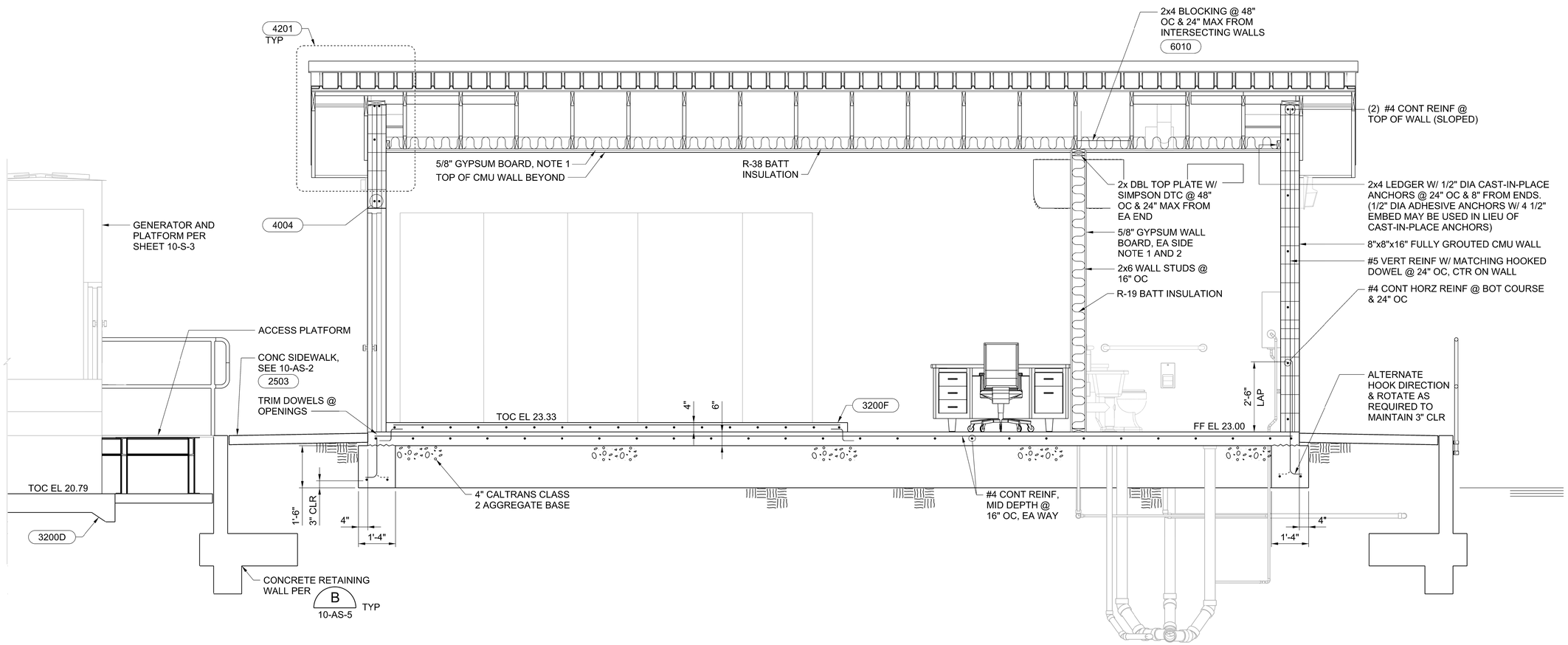

A SECTION
10-AS-2
10-AS-3
1/2" = 1'-0"

2 0 2 4 FEET
SCALE 1/2"=1'-0"

REGISTERED PROFESSIONAL ENGINEER
ANDREW L. LINDEMAN
No. C88058
CIVIL
STATE OF CALIFORNIA
05-29-2020

DESIGNED A LINDEMAN
DRAWN J MARTIN
CHECKED J KELLOGG
APPROVED M FISHER

WATERWORKS ENGINEERS
2260 Douglas Blvd., Suite 105 • Roseville, CA 95661 • 916-780-2888

CITY OF MORRO BAY
WATER RECLAMATION FACILITY
LIFT STATIONS AND OFFSITE PIPELINES

ARCHITECTURAL / STRUCTURAL
PUMP STATION A
ELECTRICAL BUILDING
SECTION

DATE MAY 2020
PROJECT NUMBER 17-082
DRAWING NUMBER 10-AS-4
SHEET NUMBER 141

FILENAME: 1782D-10AS201.DGN PLOT DATE: 5/28/2020 7:11:11 AM

NOTES:

1. INSTALL EDGE TRIM WHERE GYPSUM WALL BOARD ABUTS ANOTHER MATERIAL AT WALLS AND CELING. PROVIDE JOINT SEALANT BETWEEN TRIM AND OTHER MATERIAL PRIOR TO PAINTING.

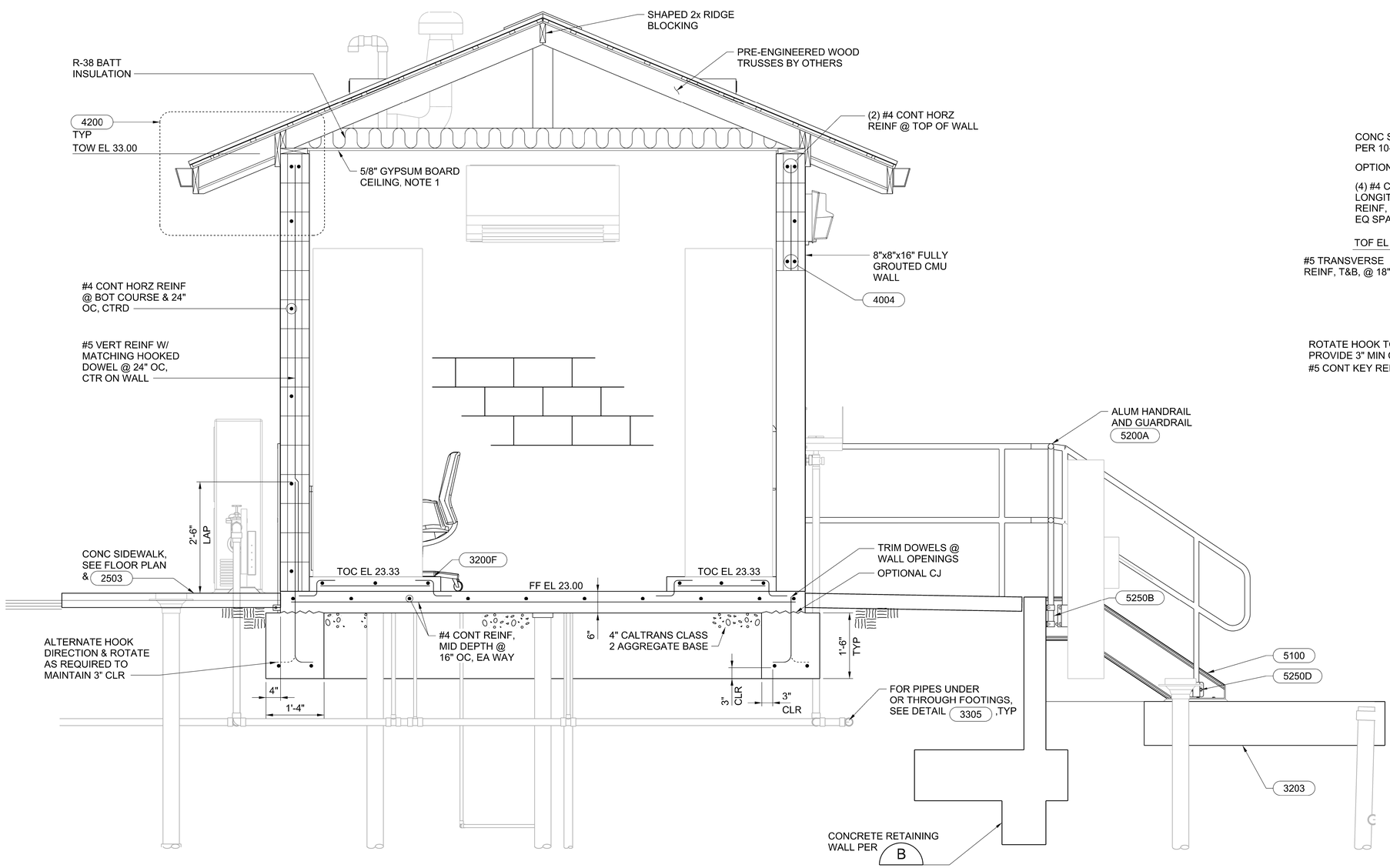

A SECTION
10-AS-2 3/4" = 1'-0"

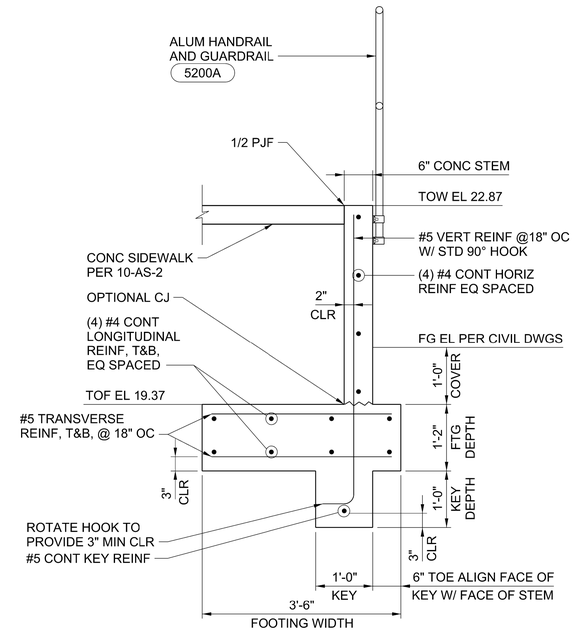

B SECTION
--- 3/4" = 1'-0"
10-AS-2
10-AS-4
10-C-2

1 0 1 2 FEET
SCALE 3/4"=1'-0"

REGISTERED PROFESSIONAL ENGINEER ANDREW L. LINDEMAN No. C88058 CIVIL STATE OF CALIFORNIA
05-29-2020

DESIGNED A LINDEMAN
DRAWN J MARTIN
CHECKED J KELLOGG
APPROVED M FISHER

WATERWORKS ENGINEERS
2260 Douglas Blvd., Suite 105 • Roseville, CA 95661 • 916-780-2888

CITY OF MORRO BAY
WATER RECLAMATION FACILITY LIFT STATIONS AND OFFSITE PIPELINES

ARCHITECTURAL / STRUCTURAL
PUMP STATION A ELECTRICAL BUILDING SECTIONS

DATE MAY 2020
PROJECT NUMBER 17-082
DRAWING NUMBER 10-AS-5
SHEET NUMBER 142

FILENAME: 1782D-10AS202.DGN PLOT DATE: 5/28/2020 7:16:51 AM

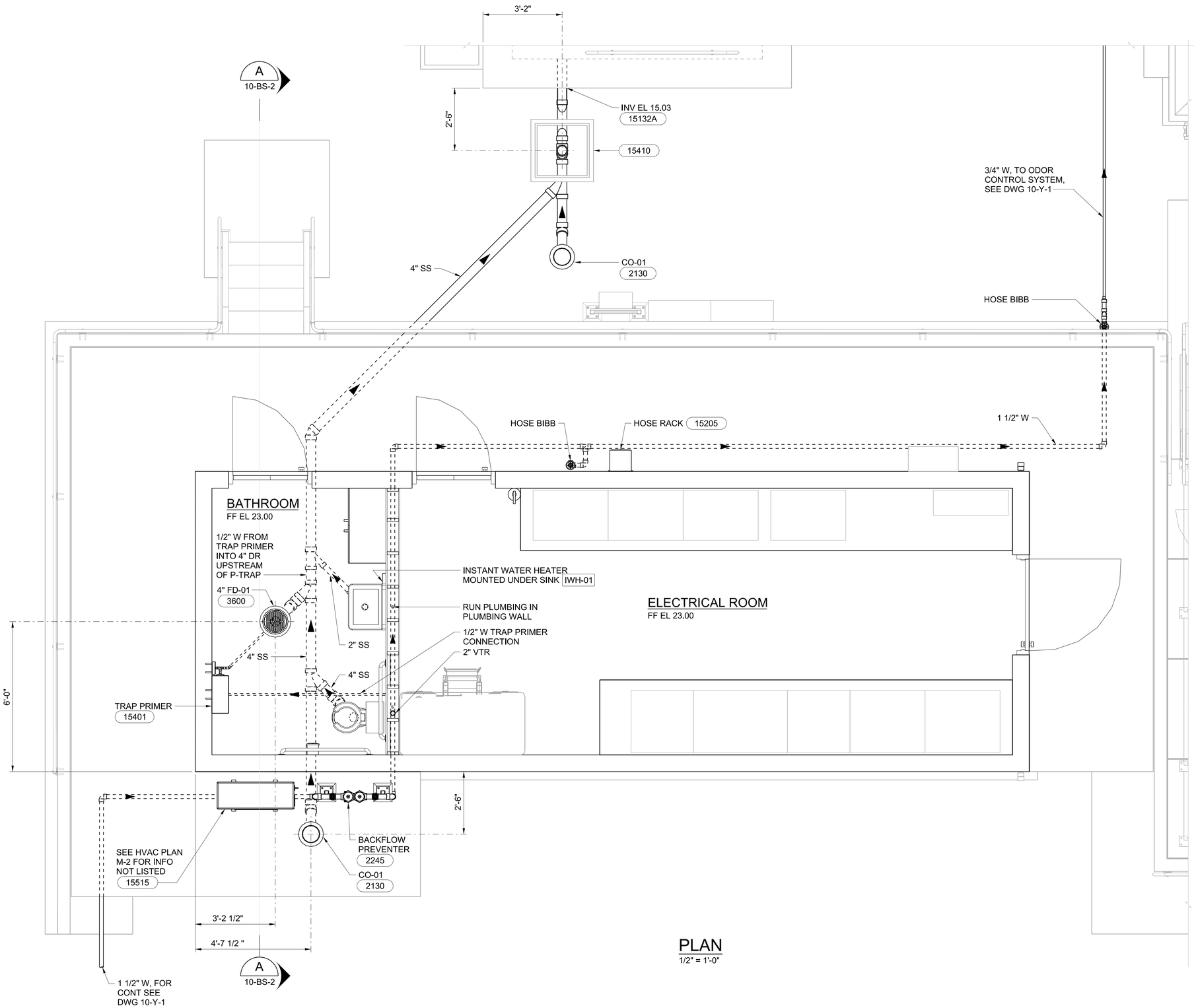

PLAN
1/2" = 1'-0"

2 0 2 4 FEET
SCALE 1/2"=1'-0"

REGISTERED PROFESSIONAL ENGINEER
VIRGINIA P. ABOUD
No. C70952
CIVIL
STATE OF CALIFORNIA
05-29-2020

DESIGNED K ALACON
DRAWN J MARTIN
CHECKED K ALACON
APPROVED M FISHER

WATERWORKS ENGINEERS
2260 Douglas Blvd., Suite 105 • Roseville, CA 95661 • 916-780-2888

CITY OF MORRO BAY
WATER RECLAMATION FACILITY
LIFT STATIONS AND OFFSITE
PIPELINES

BUILDING SERVICES
PUMP STATION A
PLAN

DATE
MAY 2020
PROJECT NUMBER
17-082
DRAWING NUMBER
10-BS-1
SHEET NUMBER 143

FILENAME: 1782D-10BS101.DGN PLOT DATE: 5/28/2020 7:02:11 AM

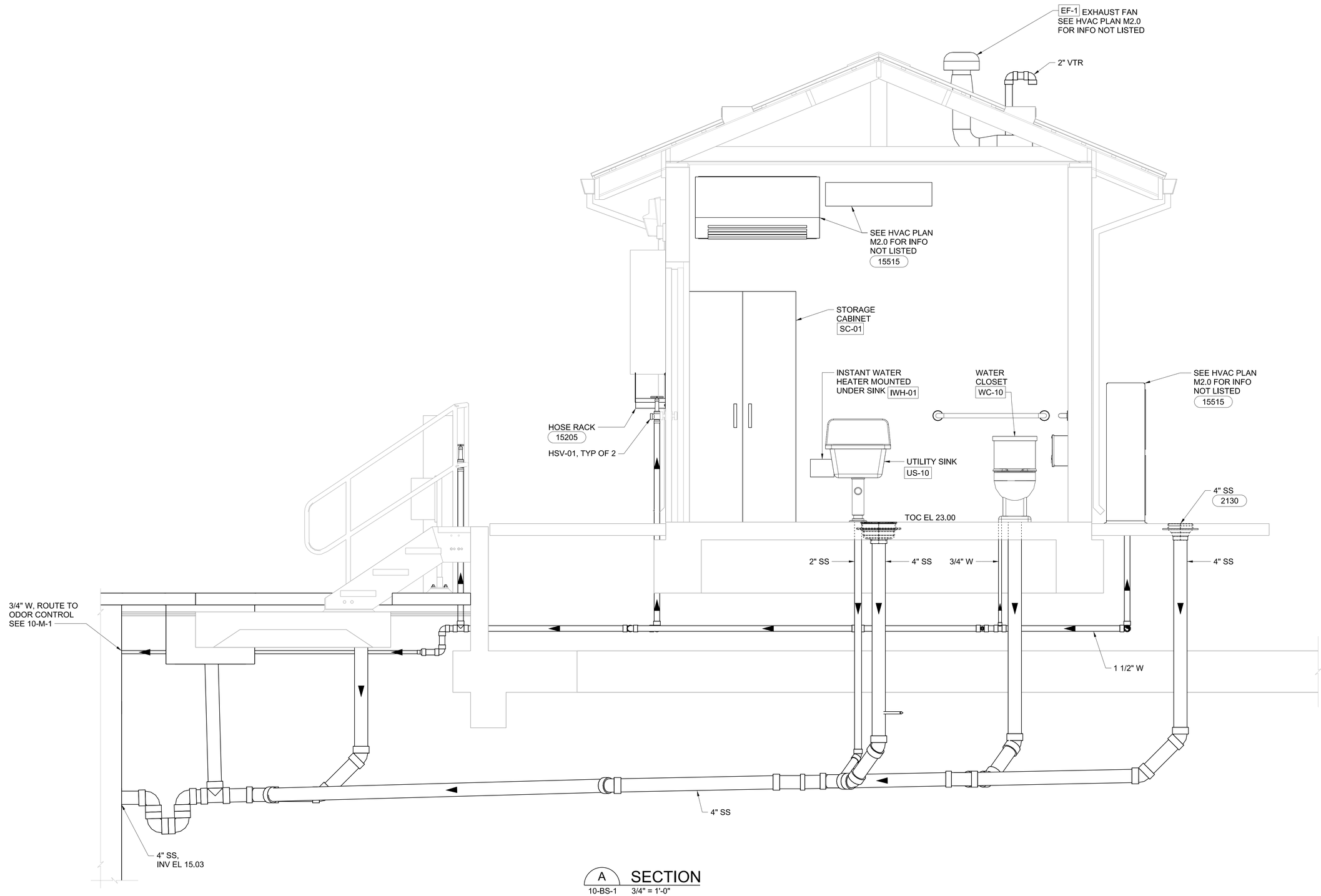

A SECTION
10-BS-1 3/4" = 1'-0"

1 0 1 2 FEET
SCALE 3/4"=1'-0"

REGISTERED PROFESSIONAL ENGINEER
KRISTINA P. ALACON
No. C70952
CIVIL
STATE OF CALIFORNIA
05-29-2020

DESIGNED K ALACON
DRAWN J MARTIN
CHECKED K ALACON
APPROVED M FISHER

WATERWORKS ENGINEERS
2260 Douglas Blvd., Suite 105 • Roseville, CA 95661 • 916-780-2888

CITY OF MORRO BAY
WATER RECLAMATION FACILITY
LIFT STATIONS AND OFFSITE PIPELINES

BUILDING SERVICES
PUMP STATION A
SECTION

DATE MAY 2020
PROJECT NUMBER 17-082
DRAWING NUMBER 10-BS-2
SHEET NUMBER 144

FILENAME: 1782D-10BS201.DGN PLOT DATE: 5/28/2020 6:41:20 AM

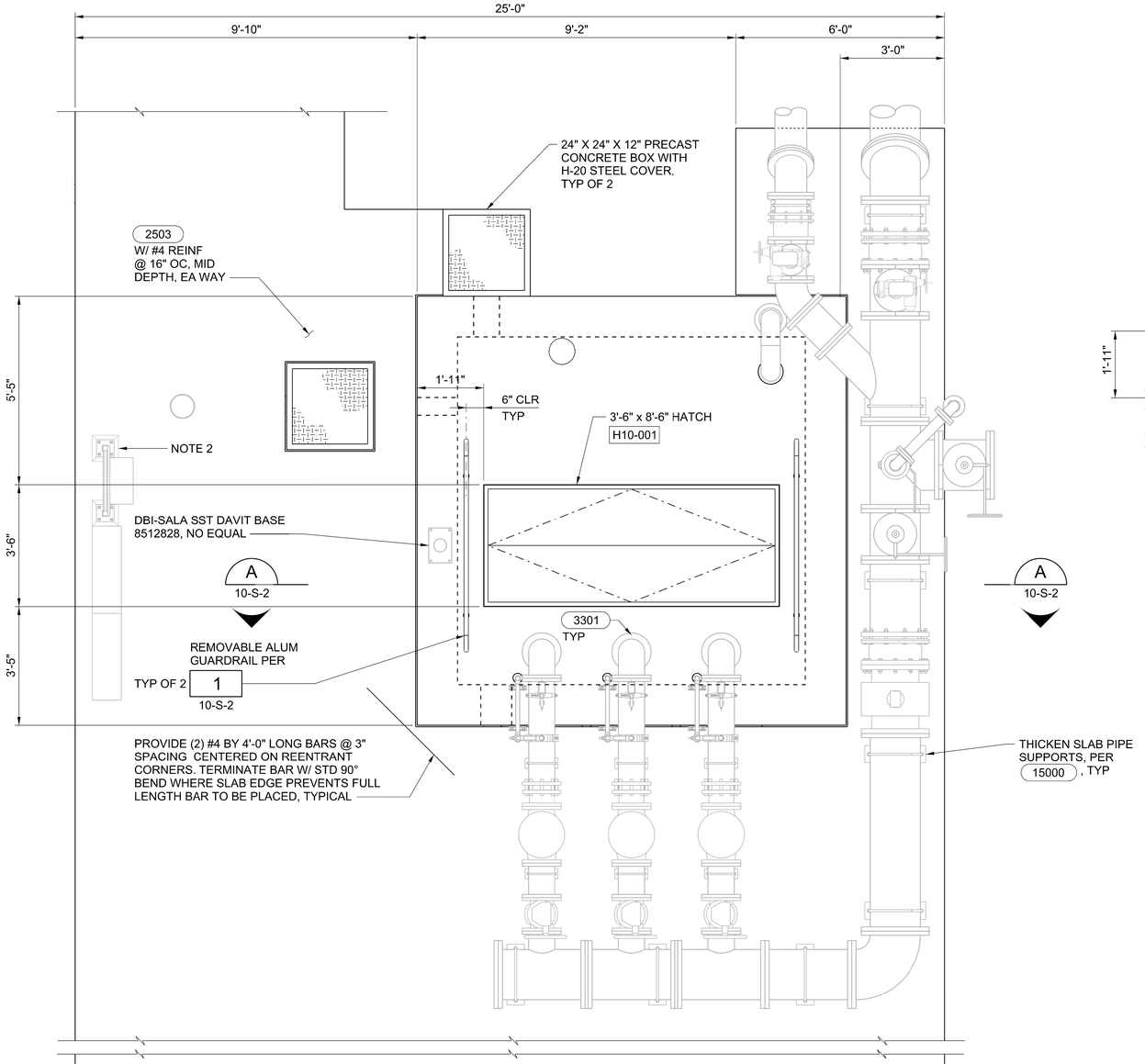

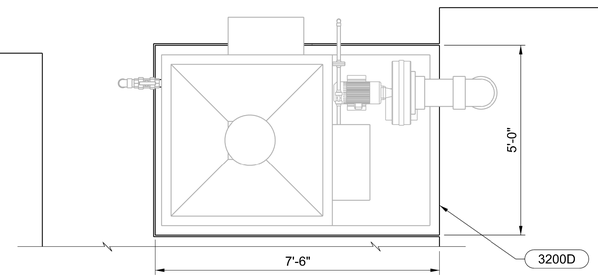

TOP PLAN

1/2" = 1'-0"

NOTES:

1. PUMP STATION DESIGN IS BASED ON FLYGT PUMPS LISTED IN SPECIFICATION SECTION 11300.
2. THICKEN SLAB UNDER ELECTRICAL EQUIPMENT PER 15000 SIM, TYP.

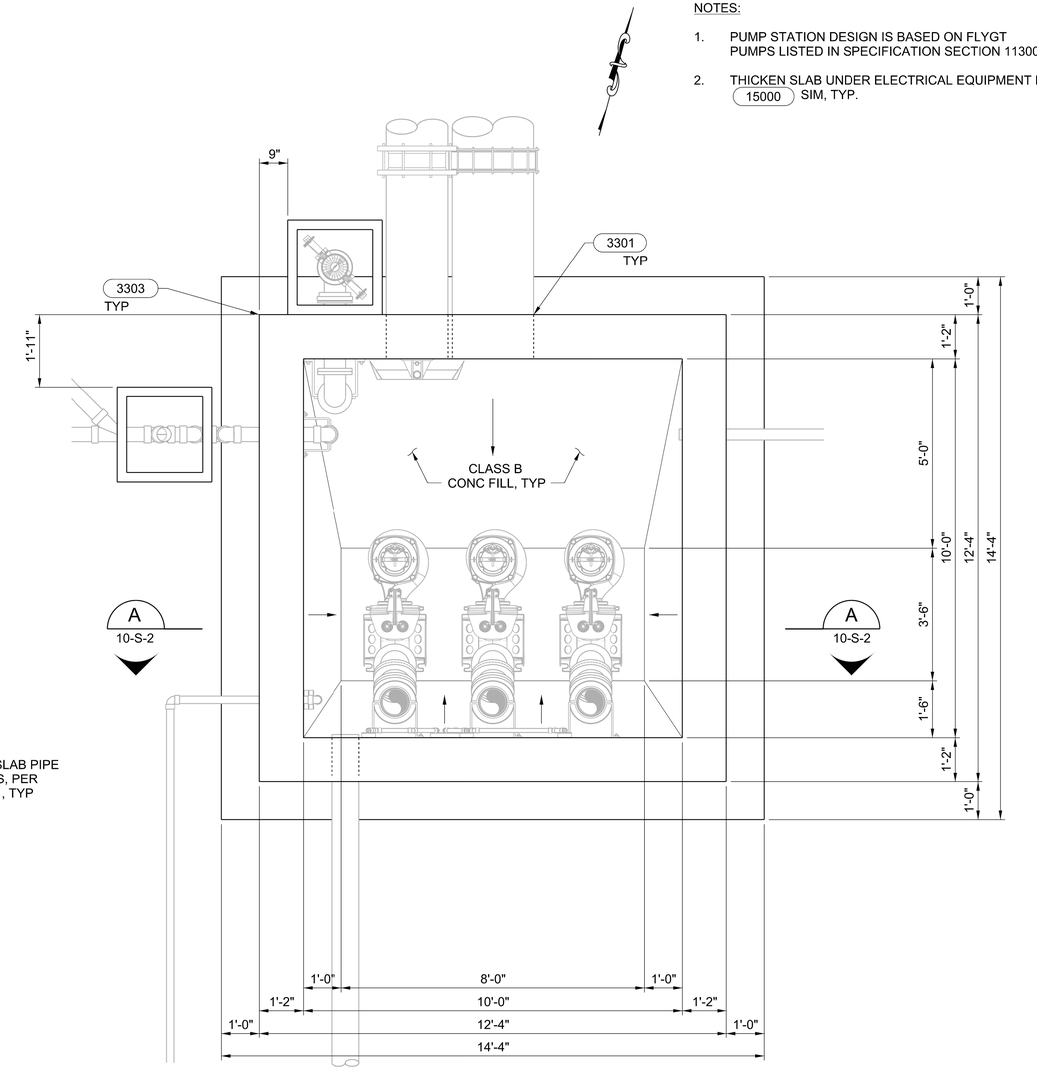

LOWER PLAN

1/2" = 1'-0"

2 0 2 4 FEET

SCALE 1/2"=1'-0"

REGISTERED PROFESSIONAL ENGINEER ANDREW L. LINDEMAN No. C88058 CIVIL STATE OF CALIFORNIA 05-29-2020

DESIGNED A LINDEMAN
DRAWN J MARTIN
CHECKED J KELLOGG
APPROVED M FISHER

WATERWORKS ENGINEERS
2260 Douglas Blvd., Suite 105 • Roseville, CA 95661 • 916-780-2888

CITY OF MORRO BAY
WATER RECLAMATION FACILITY
LIFT STATIONS AND OFFSITE PIPELINES

STRUCTURAL
PUMP STATION A PLANS

DATE MAY 2020
PROJECT NUMBER 17-082
DRAWING NUMBER 10-S-1
SHEET NUMBER 145

FILENAME: 1782D-10S101.DGN PLOT DATE: 5/28/2020 11:15:43 AM

EXCAVATION/GRADING NOTES:

1. THE LOWER 4 FEET OF THE WET WELL EXCAVATION SHOULD BE PERFORMED WITH CAUTION, USING AN EXCAVATOR TYPE OF EQUIPMENT, AND SUCH THAT CONSTRUCTION EQUIPMENT WILL NOT TRAVERSE ACROSS THE BOTTOM OF THE EXCAVATION.

2. EXCAVATIONS FOR THE WET WELL SHOULD BE DEEPENED TO ALLOW AT LEAST 2 FEET OF CRUSHED ROCK (AGGREGATE FOR STABILIZATION) ENCASED IN A GEOTEXTILE/STABILIZATION TO BE PLACED ON THE UINDISTURBED SUBGRADE AT THE BOTTOM OF THE EXCAVATION.

3. PLACE THE AGGREGATE FOR STABILIZATION IN (2) 1 FOOT LIFTS. THE FIRST LIFT SHOULD BE PLACED WITH AN EXCAVATOR OR LIGHT EQUIPMENT SUCH AS A BOB CAT. CONSOLIDATE EACH LIFT W/ A MINIMUM OF (4) PASSES WITH A VIBRATORY PLATE OR BY TRACK WALKING WITH A WIDE-TRACKED DOZER. THE SECOND LIFT MAY BE PLACED USING A WIDE-TRACK DOZER OR SIMILAR EQUIPMENT.

4. EXTEND THE AGGREGATE FOR STABILIZATION 3 FEET MINIMUM BEYOND THE FOOTPRINT OF THE STRUCTURE & COMPLETELY ENCOMPASS WITH GEOTEXTILE FABRIC.

5. A LEVELING COURSE OF STRUCTURAL FILL MAY BE PLACED AND COMPACTED OVER THE STABILIZATION LAYER IF DESIRED.

WET WELL NOTES:

1. COAT ALL INTERIOR CONCRETE SURFACES W/ MULTI-COMPONENT RESIN-BASED MORTAR LINING SYSTEM SPECIFICALLY DESIGNED TO PROTECT FROM CHEMICAL ATTACK/CORROSION PER SPECIFICATION SECTION 09875.

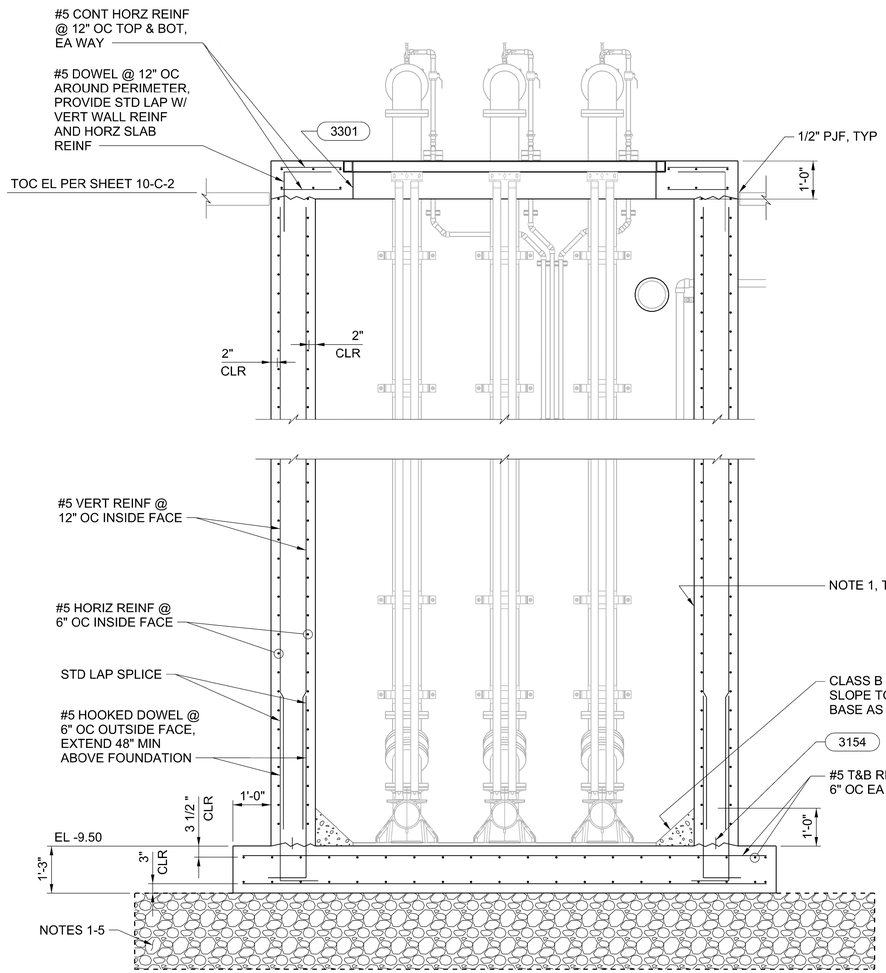

A SECTION
10-S-1 1/2" = 1'-0"

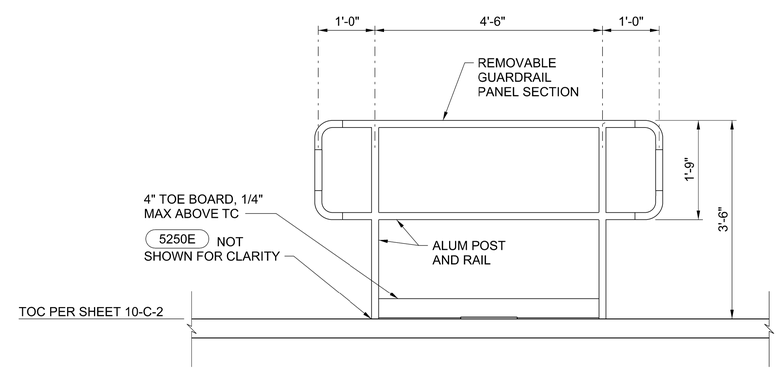

1 DETAIL
10-S-1 3/4" = 1'-0"

1 0 1 2 FEET
SCALE 3/4"=1'-0"
2 0 2 4 FEET
SCALE 1/2"=1'-0"

REGISTERED PROFESSIONAL ENGINEER ANDREW L. LINDEMAN No. C88058 CIVIL STATE OF CALIFORNIA
05-29-2020

DESIGNED A LINDEMAN
DRAWN J MARTIN
CHECKED J KELLOGG
APPROVED M FISHER

WATERWORKS ENGINEERS
2260 Douglas Blvd., Suite 105 • Roseville, CA 95661 • 916-780-2888

CITY OF MORRO BAY
WATER RECLAMATION FACILITY
LIFT STATIONS AND OFFSITE PIPELINES

STRUCTURAL
PUMP STATION A
SECTION AND DETAIL

DATE MAY 2020
PROJECT NUMBER 17-082
DRAWING NUMBER 10-S-2
SHEET NUMBER 146

FILENAME: 1782D-10S201.DGN PLOT DATE: 5/28/2020 11:33:09 AM

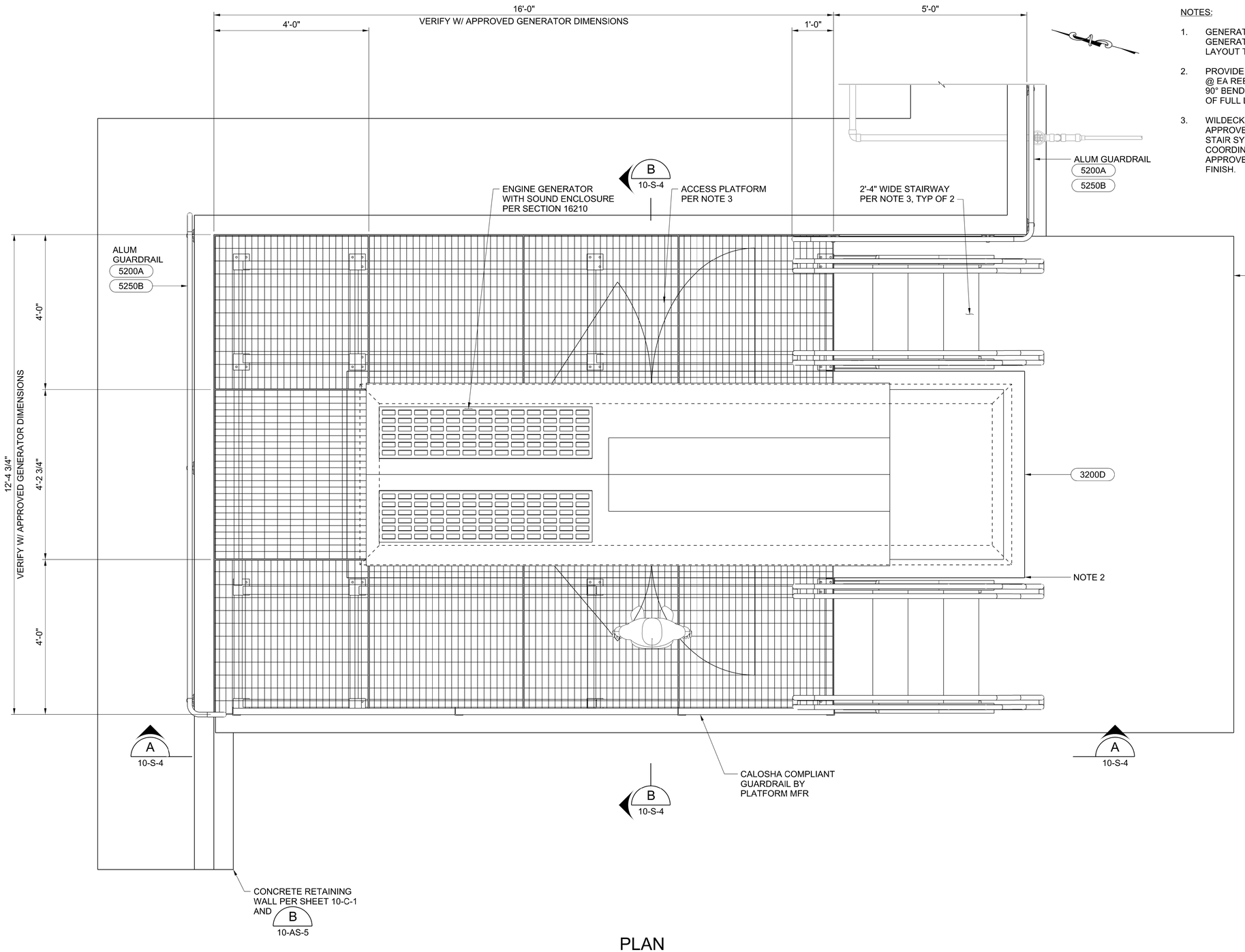

PLAN

3/4" = 1'-0"

NOTES:

1. GENERATOR SHOWN BASED ON KOHLER 250REOZJE GENERATOR WITH STATE CODE FUEL TANK. ACTUAL LAYOUT TO BE BASED ON APPROVED SUBMITTAL.
2. PROVIDE (2) #4x4'-0" DIAGONAL REINF @ 3" SPACING @ EA REENTRANT CORNER (4-TOTAL). PROVIDE STD 90° BEND WHERE SLAB EDGE PREVENTS PLACEMENT OF FULL LENGTH BAR.
3. WILDECK JIFFYSTAIR MODULAR STAIR SYSTEM, OR APPROVED EQUAL. PROVIDE CAL OSHA COMPLIANT STAIR SYSTEM WITH GUARDRAIL AS SHOWN. COORDINATE ±28" PLATFORM HEIGHT WITH APPROVED GENERATOR. HOT DIP GALVANIZED FINISH.

1 0 1 2 FEET
SCALE 3/4"=1'-0"

REGISTERED PROFESSIONAL ENGINEER
ANDREW L. LINDEMAN
No. C88058
CIVIL
STATE OF CALIFORNIA
05-29-2020

DESIGNED A LINDEMAN
DRAWN J MARTIN
CHECKED J KELLOGG
APPROVED M FISHER

WATERWORKS ENGINEERS
2260 Douglas Blvd., Suite 105 • Roseville, CA 95661 • 916-780-2888

CITY OF MORRO BAY
WATER RECLAMATION FACILITY
LIFT STATIONS AND OFFSITE PIPELINES

STRUCTURAL
PUMP STATION A GENERATOR PLAN

DATE MAY 2020
PROJECT NUMBER 17-082
DRAWING NUMBER 10-S-3
SHEET NUMBER 147

FILENAME: 1782D-10S102.DGN PLOT DATE: 5/28/2020 11:20:52 AM

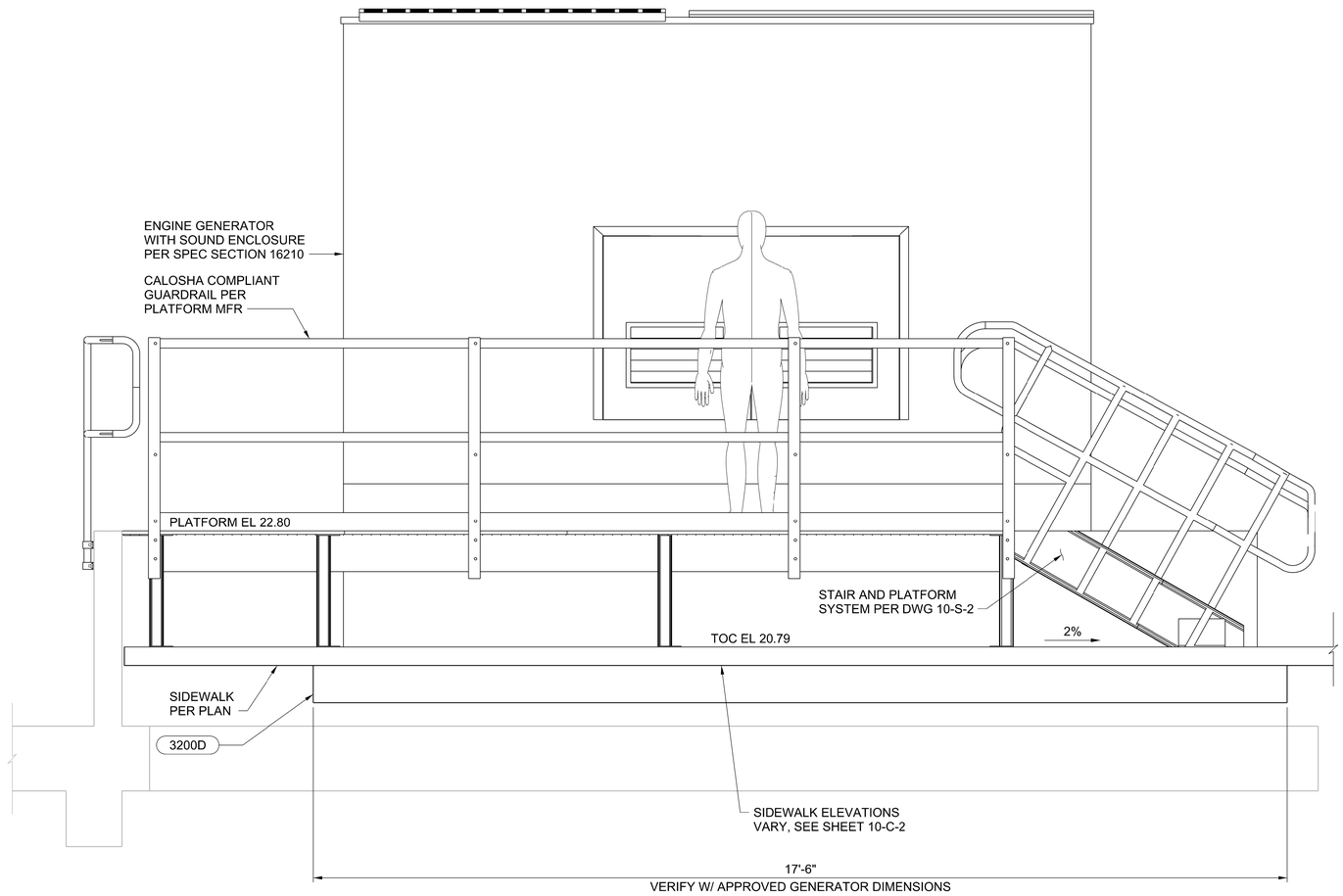

A SECTION
10-S-3 3/4" = 1'-0"

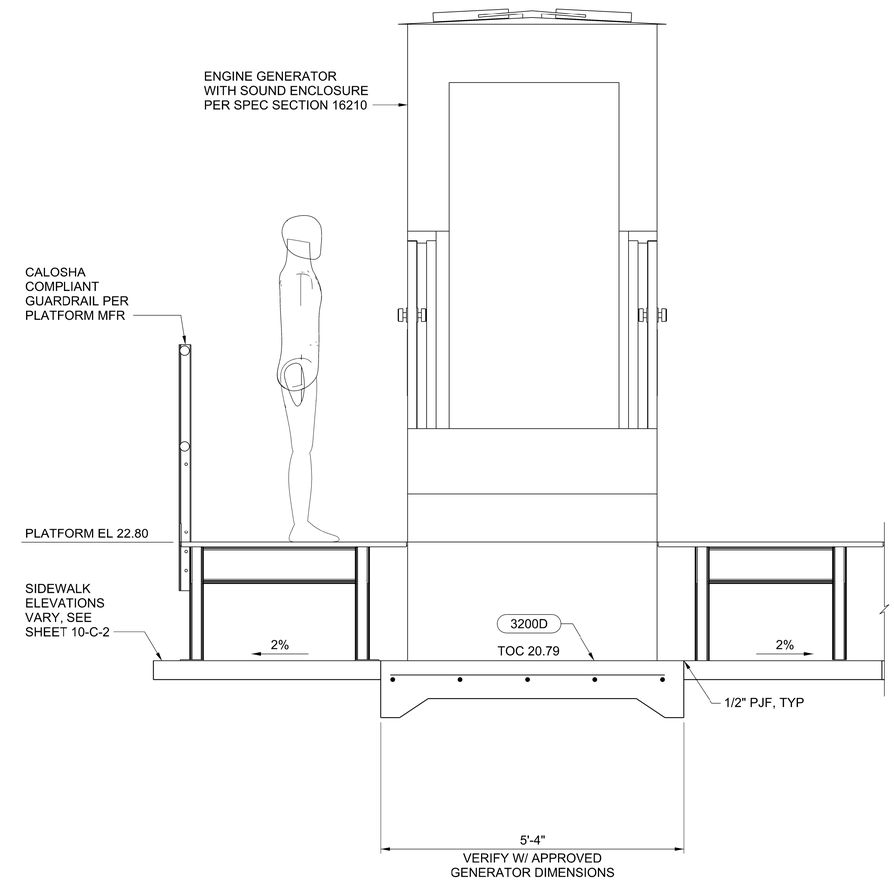

B SECTION
10-S-3 3/4" = 1'-0"

1 0 1 2 FEET
SCALE 3/4"=1'-0"

REGISTERED PROFESSIONAL ENGINEER
ANDREW L. LINDEMAN
No. C88058
CIVIL
STATE OF CALIFORNIA
05-29-2020

DESIGNED A LINDEMAN
DRAWN J MARTIN
CHECKED J KELLOGG
APPROVED M FISHER

WATERWORKS ENGINEERS
2260 Douglas Blvd., Suite 105 • Roseville, CA 95661 • 916-780-2888

CITY OF MORRO BAY
WATER RECLAMATION FACILITY
LIFT STATIONS AND OFFSITE PIPELINES

STRUCTURAL
PUMP STATION A GENERATOR SECTIONS

DATE MAY 2020
PROJECT NUMBER 17-082
DRAWING NUMBER 10-S-4
SHEET NUMBER 148

FILENAME: 1782D-10S202.DGN PLOT DATE: 5/28/2020 11:41:20 AM

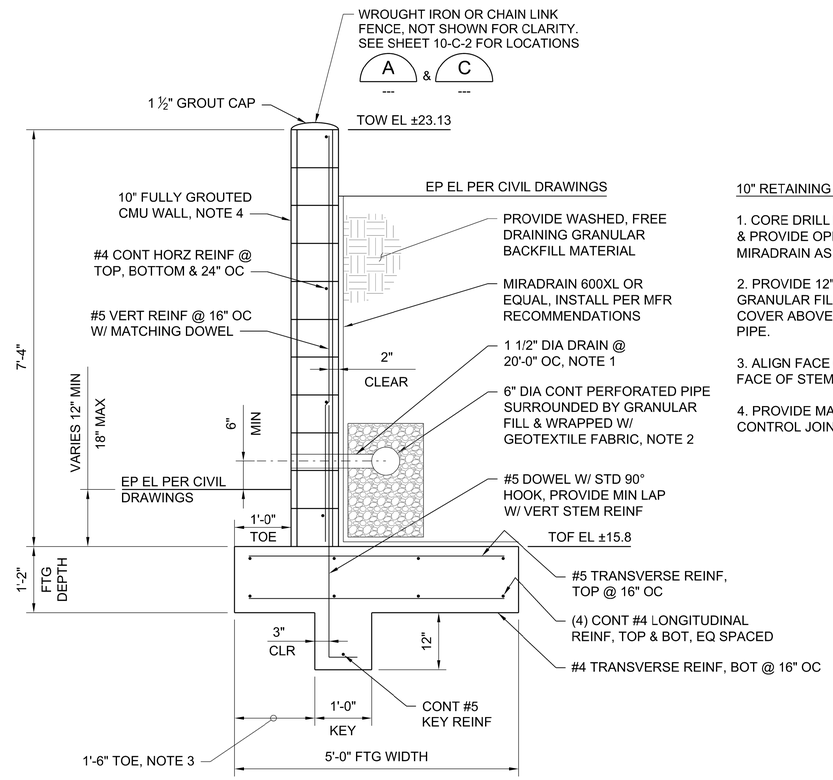

10" RETAINING WALL NOTES:

1. CORE DRILL DRAIN IN WALL & PROVIDE OPENING IN MIRADRAIN AS REQUIRED

2. PROVIDE 12" MIN WIDTH OF GRANULAR FILL W/ 6" MIN COVER ABOVE PERFORATED PIPE.

3. ALIGN FACE OF KEY WITH FACE OF STEM

4. PROVIDE MASONRY CRACK CONTROL JOINTS @ 22' OC MAX

1 DETAIL
10-C-2 3/4" = 1'-0"

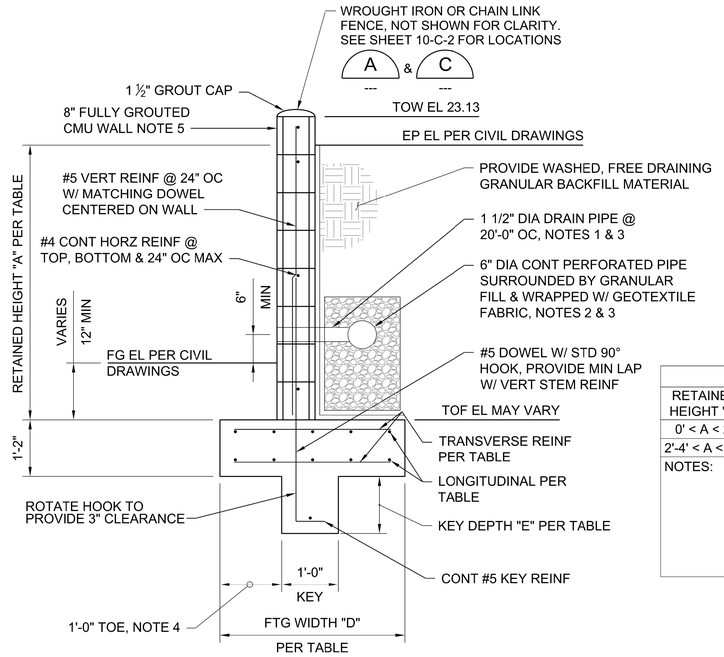

2 DETAIL
10-C-2 3/4" = 1'-0"

8" RETAINING WALL NOTES:

1.CORE DRILL DRAIN IN WALL AND PROVIDE OPENING IN MIRADRAIN AS REQUIRED.

2. PROVIDE 12" MIN WIDTH OF GRANULAR FILL W/ 6" MIN COVER ABOVE PERFORATED PIPE.

3. PERFORATED DRAIN AND GRANULAR BACKFILL NOT REQUIRED WHERE RETAINED HEIGHT IS LESS THAN 18".

4. ALIGN FACE OF KEY WITH FACE OF STEM.

5. PROVIDE MASONRY CRACK CONTROL JOINT @ 24' OC MAX

RETAINING WALL TABLE

RETAINED HEIGHT "A"	TOE WIDTH "B"	FOOTING WIDTH "C"	KEY DEPTH "D"	VERT WALL REINF	TRANS FTG REINF[1]	LONG FTG REINF[1, 2]
0' < A < 2'-4"	1'-0"	2'-9"	0"	#5 @ 24" OC	#4 @ 12" OC	(2) #4 CONT
2'-4' < A < 4'-10"	1'-0"	3'-4"	1'-0"	#5 @ 16" OC	#4 @ 16" OC	(3) #4 CONT

NOTES:
1) TRANS AND LONG REINF SHOWN IS TYPICAL FOR TOP & BOT MATS
2) EQUALLY SPACE CONT LONG REINF ACROSS FTG WIDTH
3) FIELD LOCATE WALL STEP LOCATIONS CONSIDERING MINIMUM SOIL COVER OVER TOE. STEP FOOTING PER 3308 TYPE B
4) FOR WALL HEIGHTS GREATER THAN 4'-10" USE DETAIL 2 -- ALIGN EXPOSED FACES OF CMU WALL BLOCKS WITH DIFFERING WIDTHS

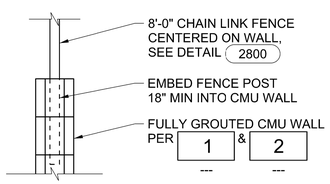

A SECTION
--- 3/4" = 1'-0"

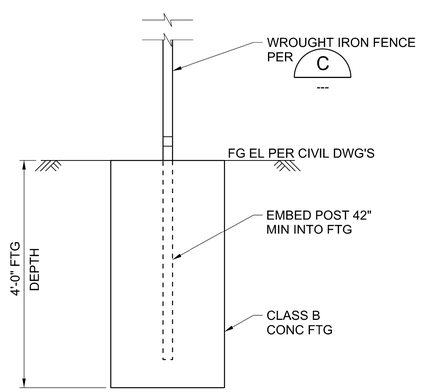

B SECTION
10-C-2 3/4" = 1'-0"

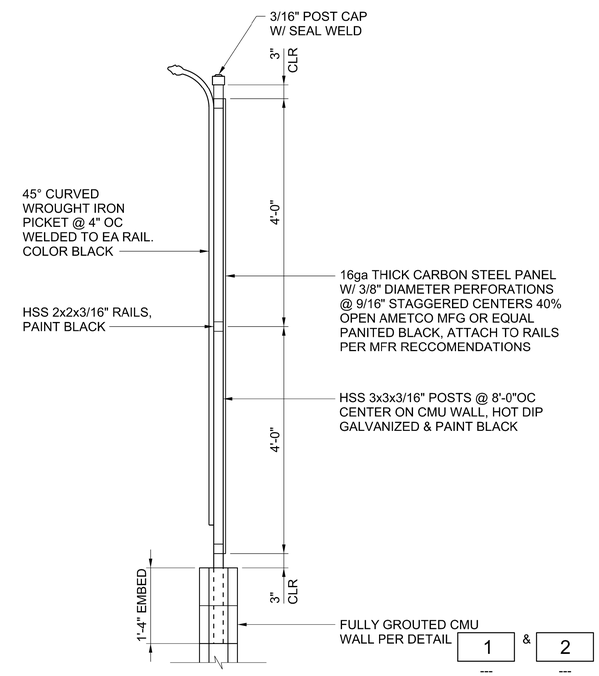

C SECTION
--- 3/4" = 1'-0"

1 0 1 2 FEET
SCALE 3/4"=1'-0"

REGISTERED PROFESSIONAL ENGINEER ANDREW L. LINDEMAN No. C88058 CIVIL STATE OF CALIFORNIA
05-29-2020

DESIGNED A LINDEMAN
DRAWN J MARTIN
CHECKED J KELLOGG
APPROVED M FISHER

WATERWORKS ENGINEERS

CITY OF MORRO BAY
WATER RECLAMATION FACILITY
LIFT STATIONS AND OFFSITE PIPELINES

STRUCTURAL
STRUCTURAL SECTIONS AND DETAILS

DATE MAY 2020
PROJECT NUMBER 17-082
DRAWING NUMBER 10-S-5
SHEET NUMBER 149

FILENAME: 1782D-10S801.DGN PLOT DATE: 2/6/2020 2:28:43 PM

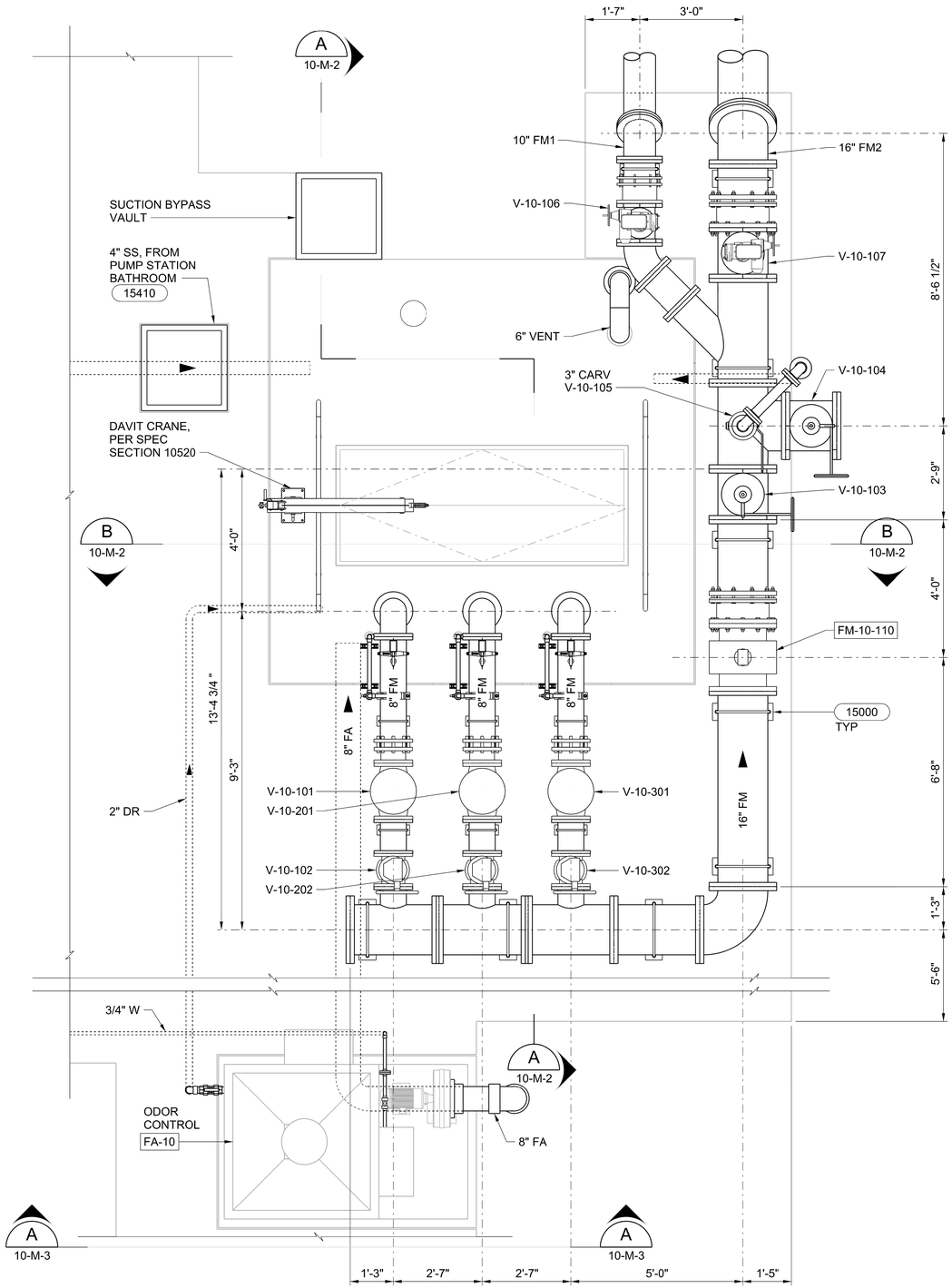

TOP PLAN

1/2" = 1'-0"

NOTES:

1. PUMP STATION DESIGN IS BASED ON FLYGT PUMPS LISTED IN SPECIFICATION SECTION 11300.

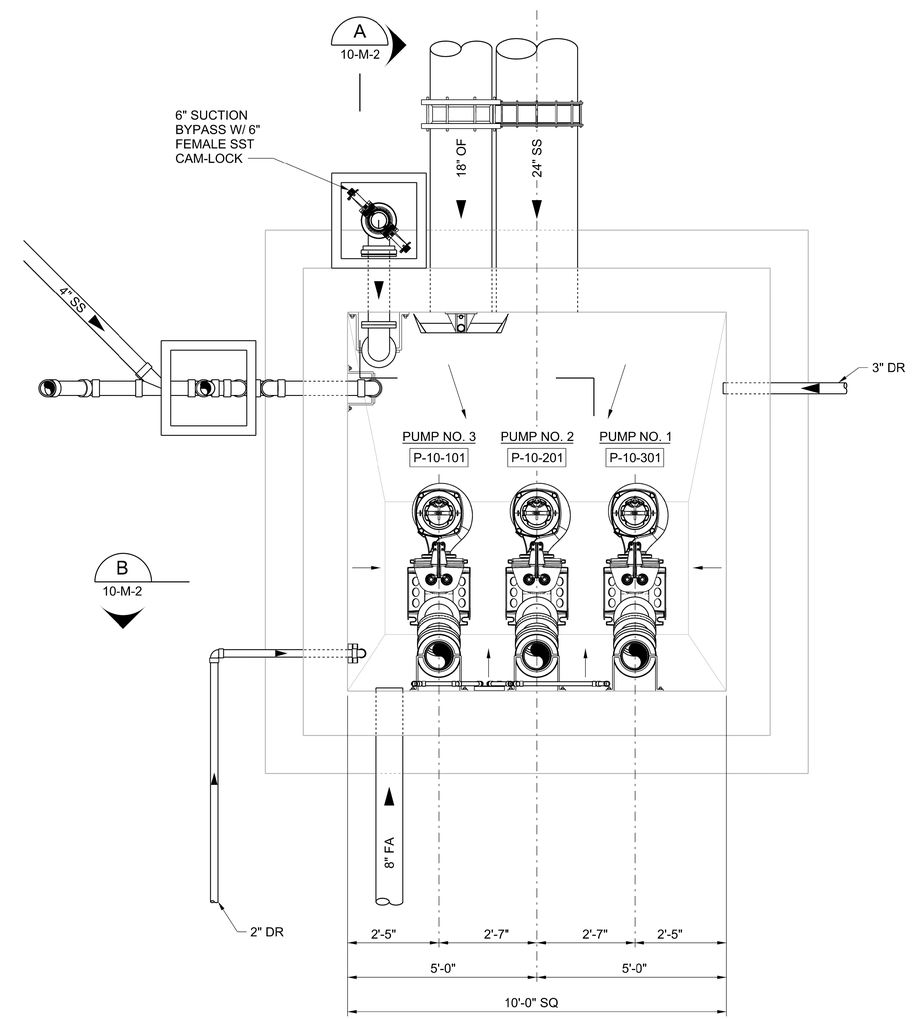

LOWER PLAN

1/2" = 1'-0"

2 0 2 4 FEET

SCALE 1/2"=1'-0"

REGISTERED PROFESSIONAL ENGINEER
ANASTIRA P. ALAGON
No. C70952
CIVIL
STATE OF CALIFORNIA
05-29-2020

DESIGNED K ALACON
DRAWN J MARTIN
CHECKED K ALACON
APPROVED M FISHER

WATERWORKS ENGINEERS
2260 Douglas Blvd., Suite 105 • Roseville, CA 95661 • 916-780-2888

CITY OF MORRO BAY
WATER RECLAMATION FACILITY
LIFT STATIONS AND OFFSITE PIPELINES

MECHANICAL
PUMP STATION PLANS

DATE MAY 2020
PROJECT NUMBER 17-082
DRAWING NUMBER 10-M-1
SHEET NUMBER 150

FILENAME: 1782D-10M101.DGN PLOT DATE: 5/28/2020 7:47:56 AM

NOTES:

1. FLOOR SLEEVE SHALL BE SCH 80 PVC.

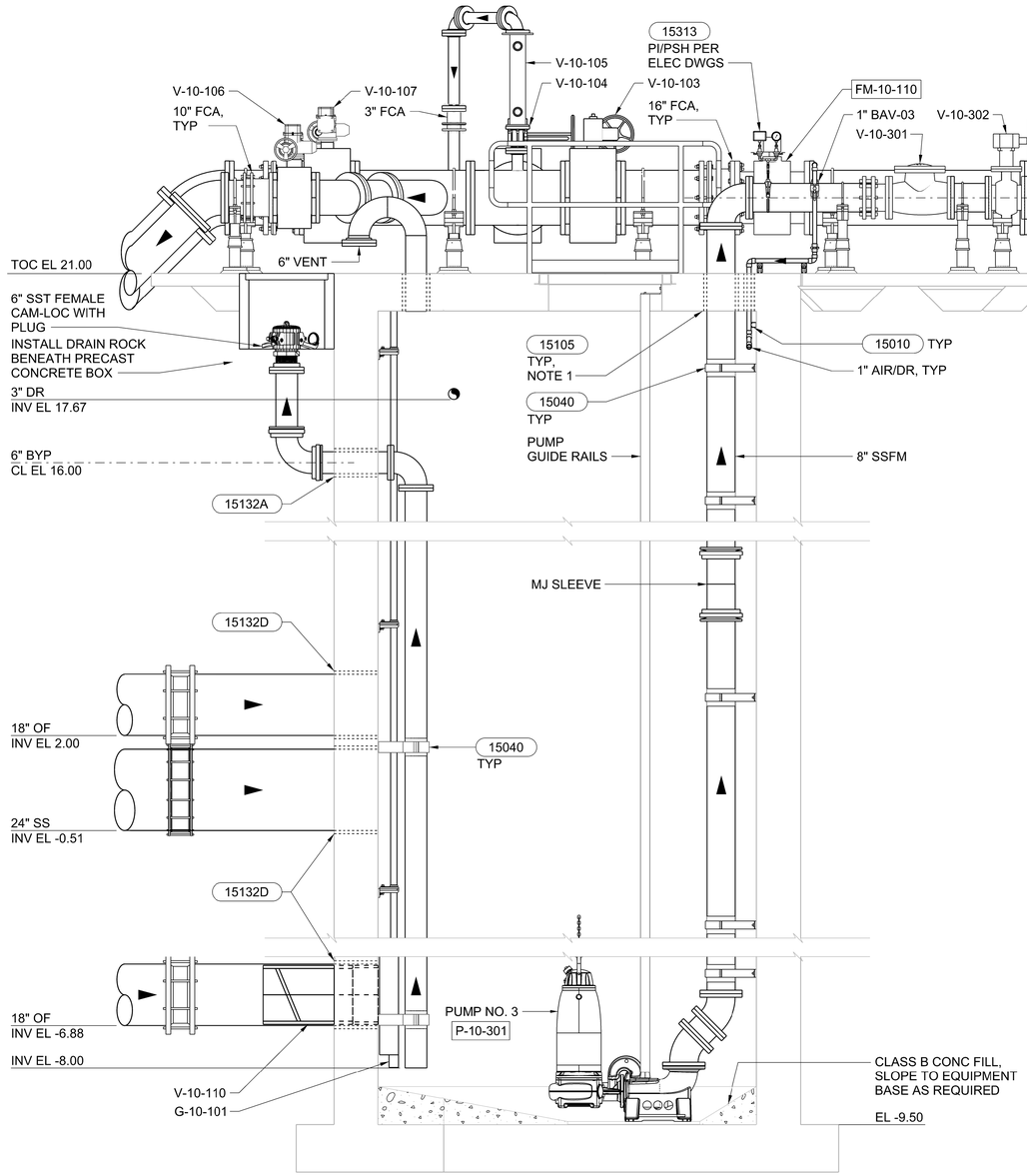

A SECTION
10-M-1 1/2" = 1'-0"

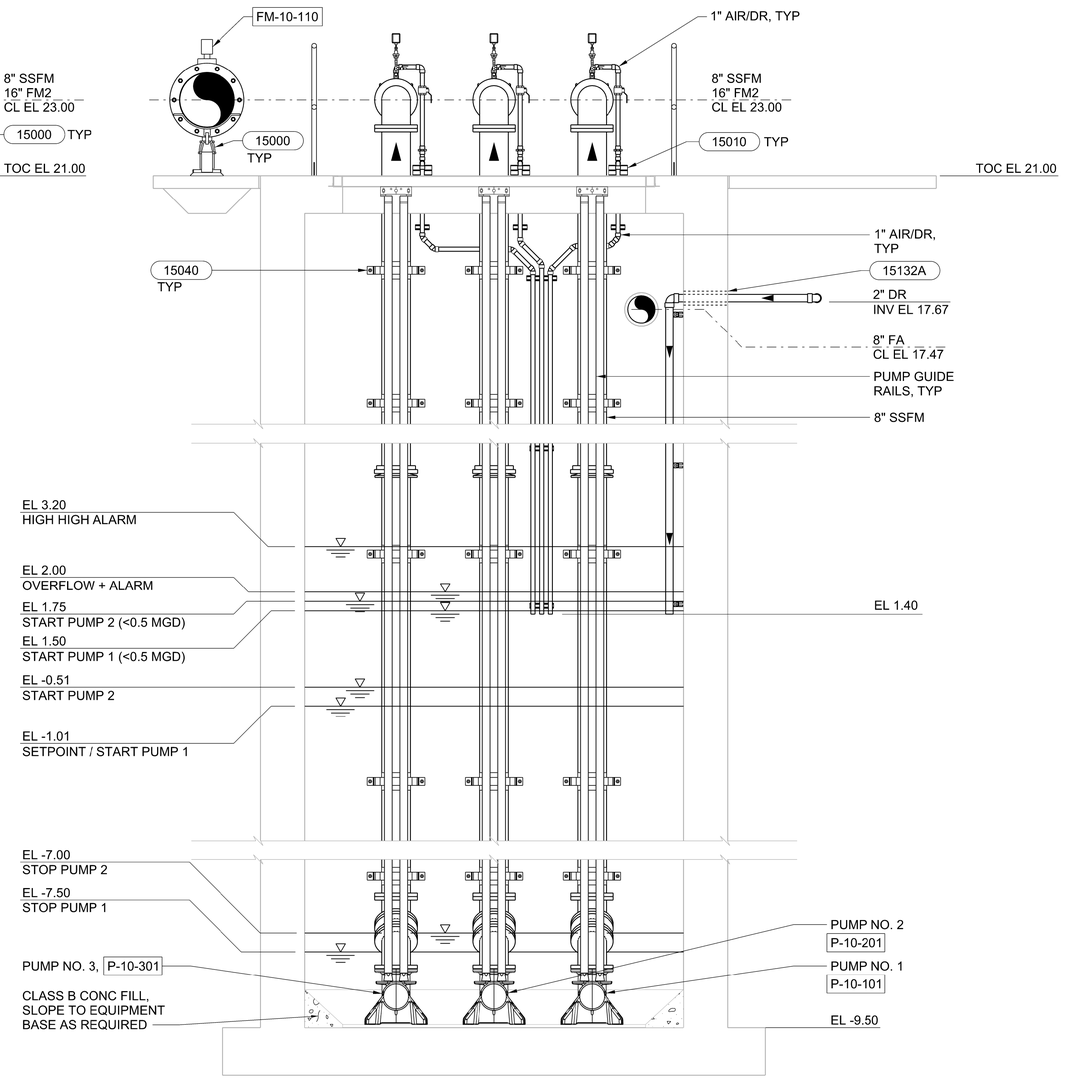

B SECTION
10-M-1 1/2" = 1'-0"

2 0 2 4 FEET
SCALE 1/2"=1'-0"

REGISTERED PROFESSIONAL ENGINEER
KRISTINA P. ALACON
No. C70952
CIVIL
STATE OF CALIFORNIA
05-29-2020

DESIGNED K ALACON
DRAWN J MARTIN
CHECKED K ALACON
APPROVED M FISHER

WATERWORKS ENGINEERS
2260 Douglas Blvd., Suite 105 • Roseville, CA 95661 • 916-780-2888

CITY OF MORRO BAY
WATER RECLAMATION FACILITY
LIFT STATIONS AND OFFSITE PIPELINES

MECHANICAL
PUMP STATION A SECTIONS

DATE MAY 2020
PROJECT NUMBER 17-082
DRAWING NUMBER 10-M-2
SHEET NUMBER 151

FILENAME: 1782D-10M201.DGN PLOT DATE: 5/28/2020 11:02:55 AM

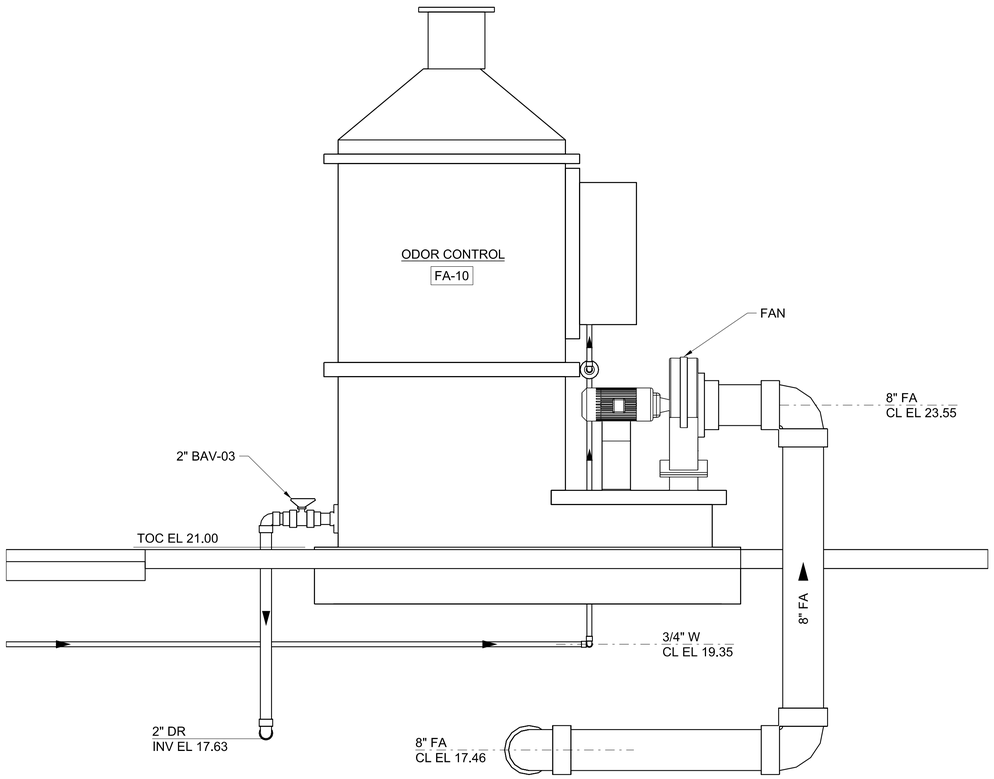

A 10-M-1 SECTION
3/4" = 1'-0"

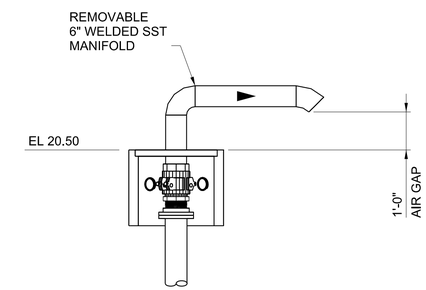

B 10-C-1 SECTION
1/2" = 1'-0"

2 0 2 4 FEET
SCALE 1/2"=1'-0"
1 0 1 2 FEET
SCALE 3/4"=1'-0"

REGISTERED PROFESSIONAL ENGINEER
KRISTINA P. ALACON
No. C70952
CIVIL
STATE OF CALIFORNIA
05-29-2020

DESIGNED K ALACON
DRAWN J MARTIN
CHECKED K ALACON
APPROVED M FISHER

WATERWORKS ENGINEERS
2260 Douglas Blvd., Suite 105 • Roseville, CA 95661 • 916-780-2888

CITY OF MORRO BAY
WATER RECLAMATION FACILITY
LIFT STATIONS AND OFFSITE PIPELINES

MECHANICAL
PUMP STATION A SECTIONS

DATE MAY 2020
PROJECT NUMBER 17-082
DRAWING NUMBER 10-M-3
SHEET NUMBER 152

FILENAME: 1782D-10M202.DGN PLOT DATE: 5/26/2020 4:32:24 PM

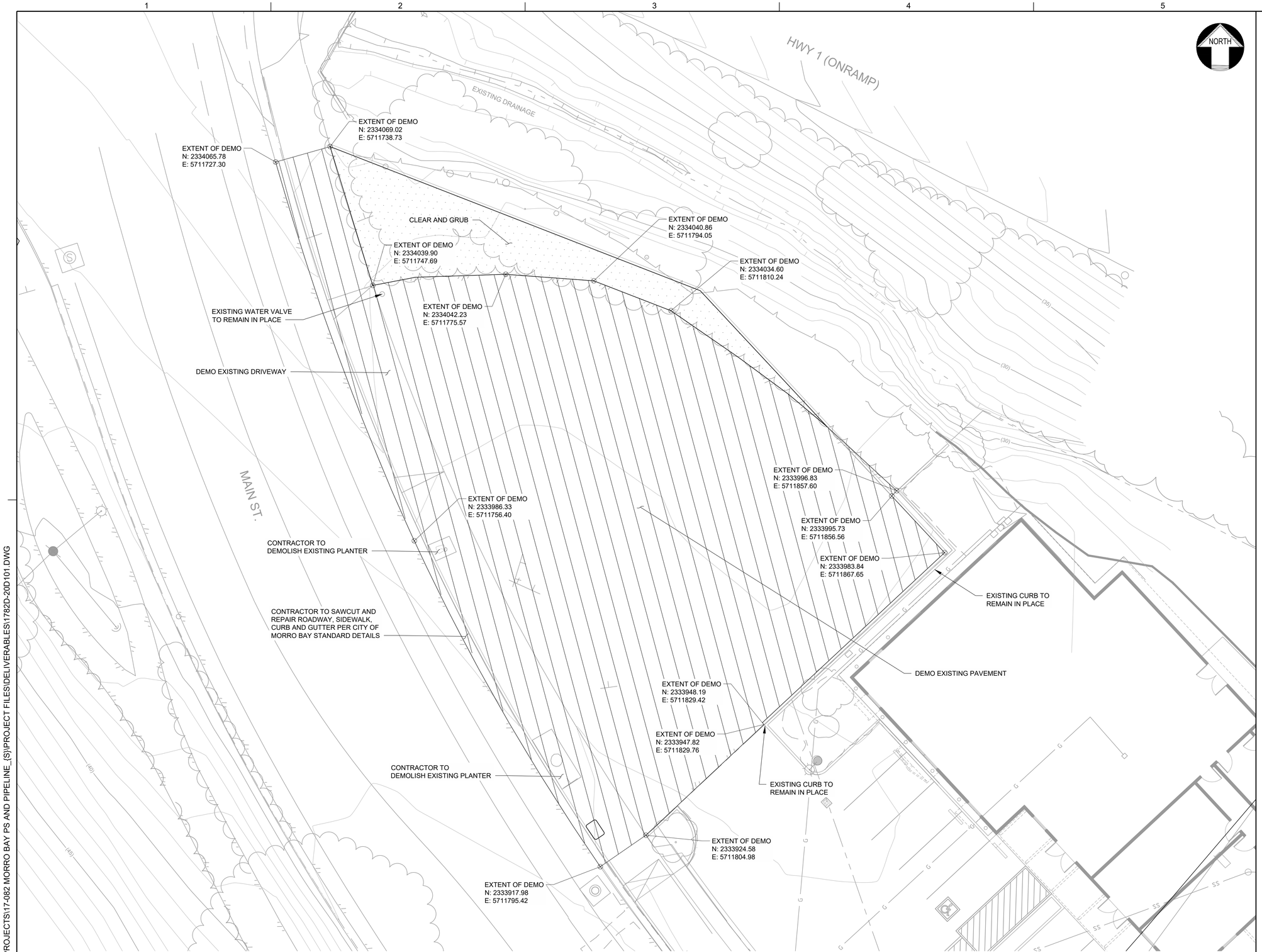

10 0 10 20 FEET
SCALE 1"=10'

REGISTERED PROFESSIONAL ENGINEER
RACHEL LEWIS
No. C 67194
CIVIL
STATE OF CALIFORNIA
05/29/2020

DESIGN P WEBSTER
DRAWN P WEBSTER
CHECKED T LEWIS
APPROVED M FISHER

WATERWORKS ENGINEERS
2260 Douglas Blvd, Suite 105 • Roseville, CA 95661 • 916-780-2888

CITY OF MORRO BAY
WATER RECLAMATION FACILITY
LIFT STATION AND OFFSITE
PIPELINES

CIVIL
PUMP STATION B DEMOLITION PLAN

DATE MAY 2020
PROJECT NUMBER 17-082
DRAWING NUMBER 20-D-1
SHEET NUMBER 153

L:\CAD\PROJECTS\17-082 MORRO BAY PS AND PIPELINE_{S}\PROJECT FILES\DELIVERABLES\1782D-20D101.DWG

JOB NUMBER: 17-082 FILENAME: 1782D-20D101.DWG PLOT DATE: 06/15/20 PLOT TIME: 10:52:22

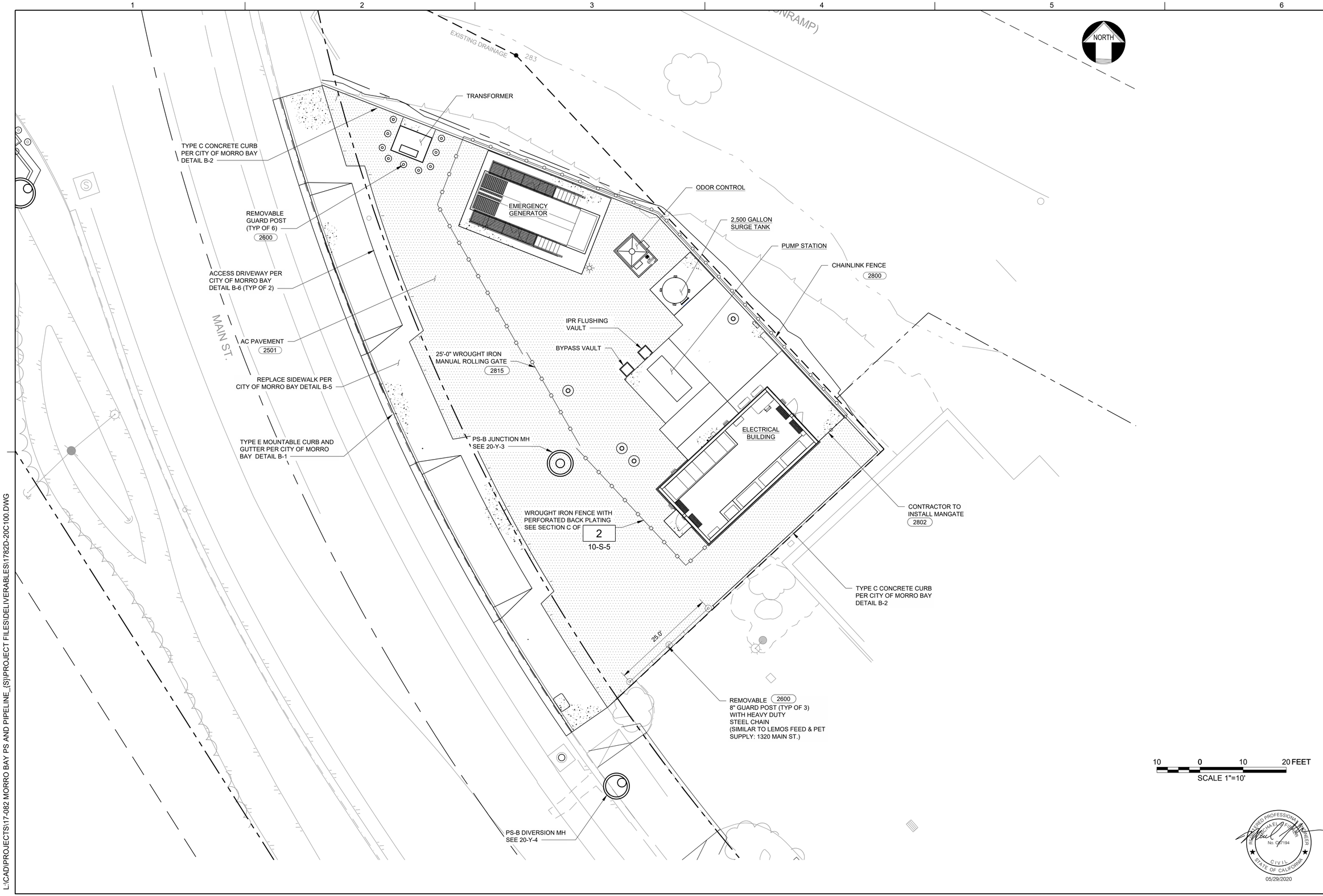

L:\CAD\PROJECTS\17-082 MORRO BAY PS AND PIPELINE_(S)\PROJECT FILES\DELIVERABLES\1782D-20C100.DWG

DESIGN P WEBSTER
DRAWN P WEBSTER
CHECKED T LEWIS
APPROVED M FISHER

WATERWORKS ENGINEERS
2260 Douglas Blvd, Suite 105 • Roseville, CA 95661 • 916-780-2888

CITY OF MORRO BAY
WATER RECLAMATION FACILITY
LIFT STATION AND OFFSITE PIPELINES

CIVIL
PUMP STATION B OVERALL PLAN

REGISTERED PROFESSIONAL ENGINEER
MICHAEL FISHER
No. C67194
CIVIL
STATE OF CALIFORNIA
05/29/2020

DATE MAY 2020
PROJECT NUMBER 17-082
DRAWING NUMBER 20-C-1
SHEET NUMBER 154

JOB NUMBER: 17-082 FILENAME: 1782D-20C100.DWG PLOT DATE: 06/15/20 PLOT TIME: 10:54:53

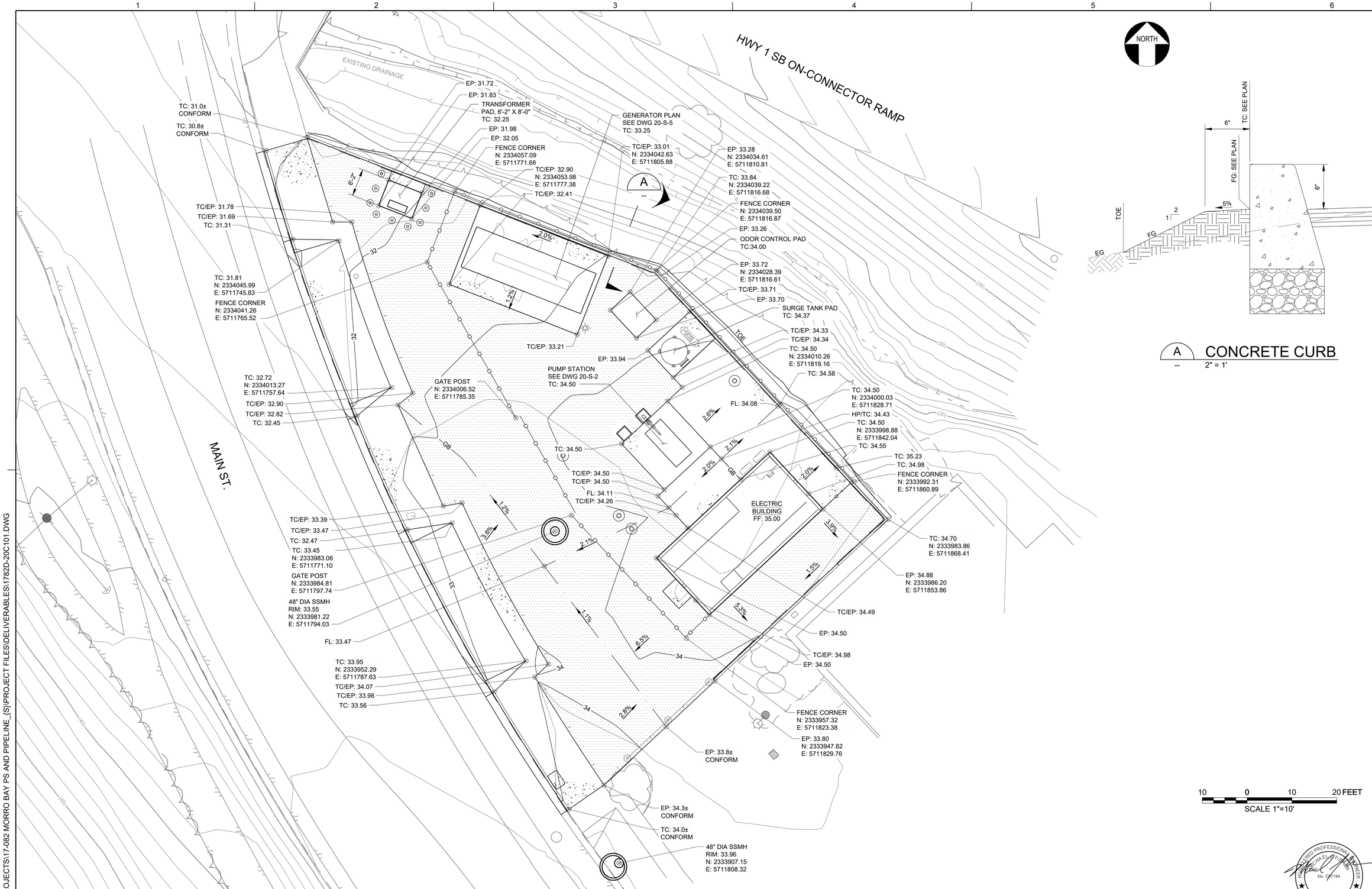

REGISTERED PROFESSIONAL ENGINEER
MICHAEL FISHER
No. C67194
CIVIL
STATE OF CALIFORNIA
05/29/2020

DESIGN P WEBSTER
DRAWN P WEBSTER
CHECKED T LEWIS
APPROVED M FISHER

WATERWORKS ENGINEERS
2260 Douglas Blvd, Suite 105 • Roseville, CA 95661 • 916-780-2888

CITY OF MORRO BAY
WATER RECLAMATION FACILITY
LIFT STATION AND OFFSITE PIPELINES

CIVIL
PUMP STATION B GRADING PLAN

DATE MAY 2020
PROJECT NUMBER 17-082
DRAWING NUMBER 20-C-2
SHEET NUMBER 155

L:\CAD\PROJECTS\17-082 MORRO BAY PS AND PIPELINE_(S)\PROJECT FILES\DELIVERABLES\1782D-20C101.DWG

JOB NUMBER: 17-082 FILENAME: 1782D-20C101.DWG PLOT DATE: 06/15/20 PLOT TIME: 12:57:45

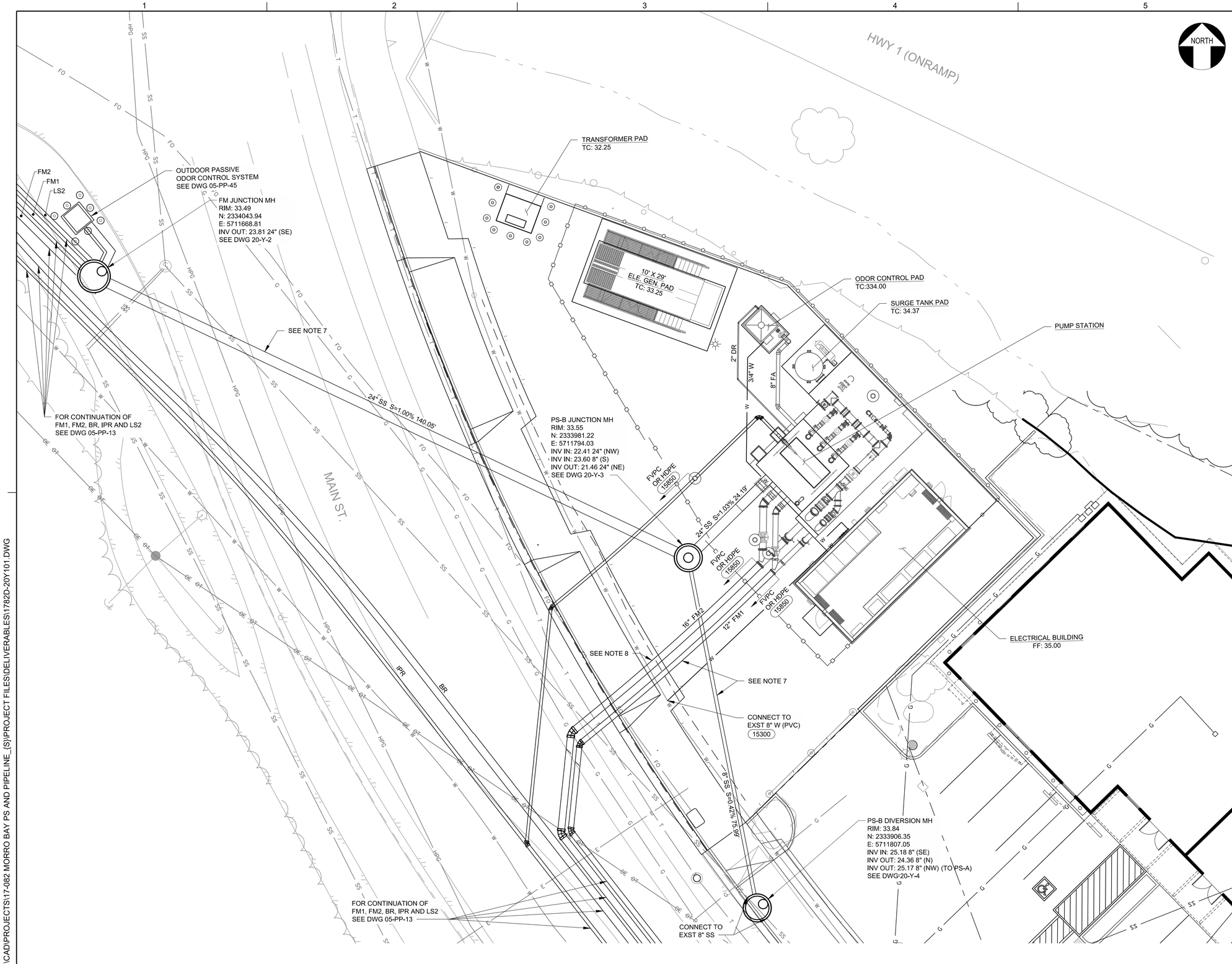

NOTES:

1. SEWER MANHOLES SHALL BE PER CITY OF MORRO BAY STANDARD DETAIL S-3 UNLESS OTHERWISE NOTED.
2. SEWER MANHOLE FRAME AND COVER SHALL BE PINKERTON NO. A-107, WEIGHT 264 LBS, OR APPROVED EQUAL. COVER SHALL BE MARKED WITH "SEWER" IN THE CENTER. 2120
3. CONSTRUCT IPR AND WATER LINES PER TRENCH DETAIL 2/05-CD-09.
4. THE CONTRACTOR SHALL COMPLY WITH THE GENERAL CIVIL NOTES AND PERMITTING GENERAL NOTES.
5. CONSTRUCT GRAVITY SS PIPELINES PER TRENCH DETAIL 3/05-CD-09.
6. CONSTRUCT DUAL FM-1 AND FM-2 PIPELINES PER TRENCH DETAIL 2/05-CD-05. REFERENCE PLAN AND PROFILE DRAWING FOR MATERIAL SIZE AND CLASS.
7. SEE DWG 05-PP-45 FOR PLAN AND PROFILE.
8. EXTEND TRACER WIRE ALONG FM2 TO PS-B INSTALL TRACER WIRE TERMINAL 2060 AND GROUND ROD 16410

REGISTERED PROFESSIONAL ENGINEER
MICHAEL P. FISHER
No. C67194
CIVIL
STATE OF CALIFORNIA
05/29/2020

DESIGN P WEBSTER
DRAWN P WEBSTER
CHECKED T LEWIS
APPROVED M FISHER

WATERWORKS ENGINEERS
2260 Douglas Blvd, Suite 105 • Roseville, CA 95661 • 916-780-2888

CITY OF MORRO BAY
WATER RECLAMATION FACILITY
LIFT STATION AND OFFSITE PIPELINES

CIVIL
PUMP STATION B YARD PIPING PLAN

DATE MAY 2020
PROJECT NUMBER 17-082
DRAWING NUMBER 20-Y-1
SHEET NUMBER 156

L:\CAD\PROJECTS\17-082 MORRO BAY PS AND PIPELINE_(S)\PROJECT FILES\DELIVERABLES\1782D-20Y101.DWG

JOB NUMBER: 17-082 FILENAME: 1782D-20Y101.DWG PLOT DATE: 06/15/20 PLOT TIME: 10:57:00

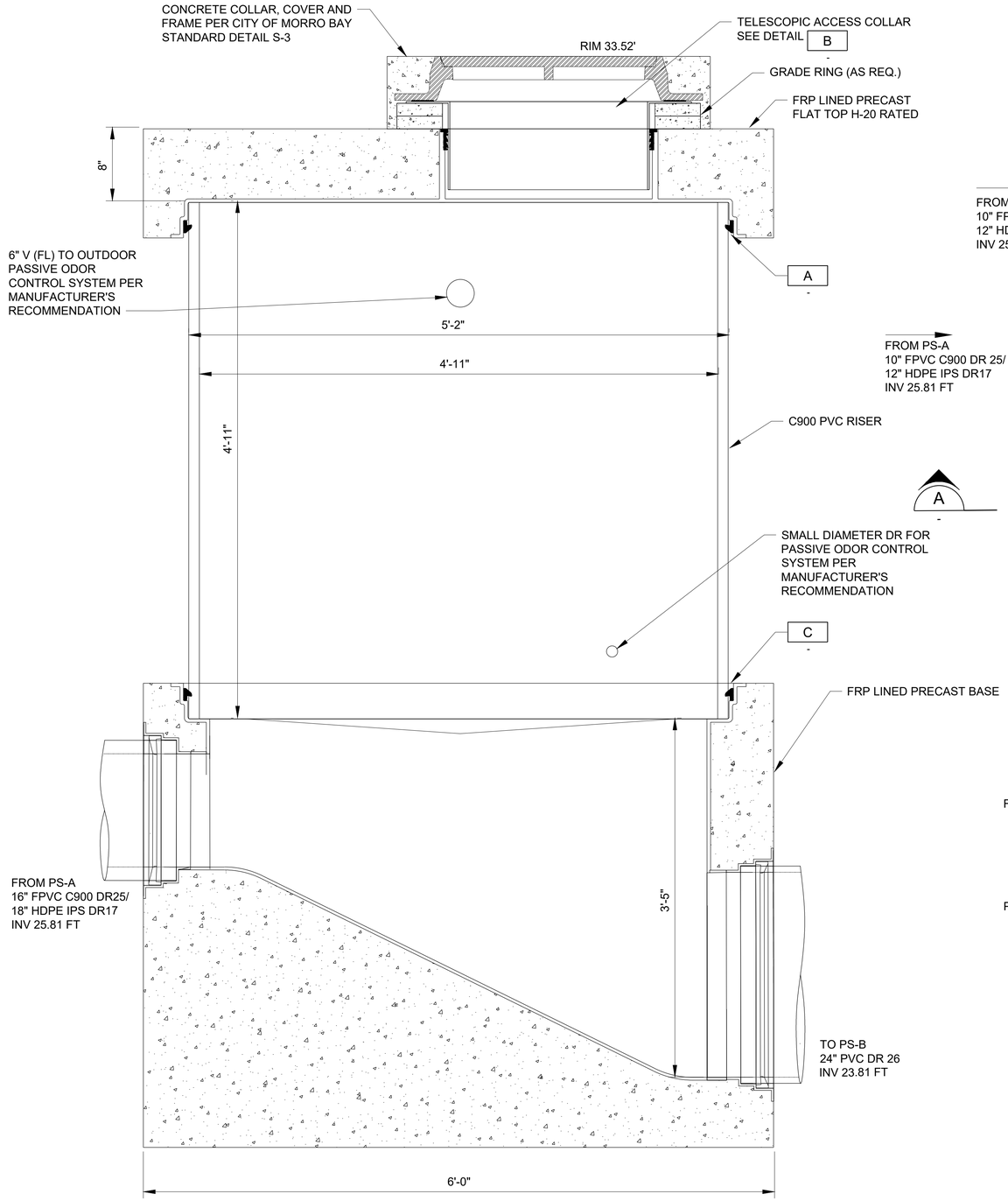

A SECTION
-- NTS

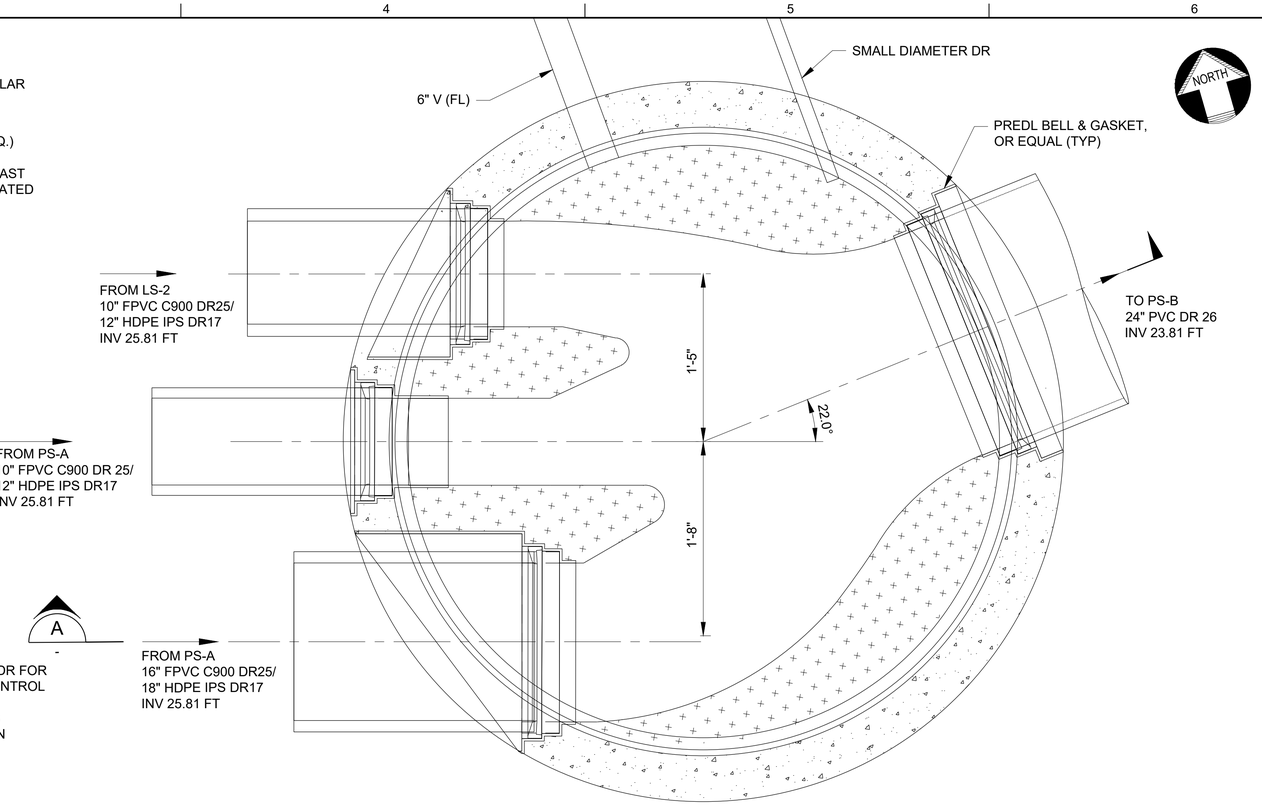

FM JUNCTION MANHOLE PLAN
NTS

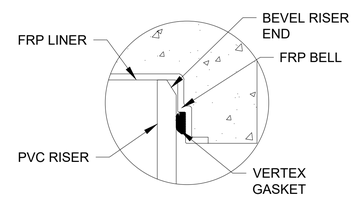

A JOINT DETAIL
- NTS

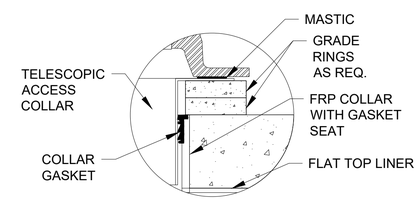

B JOINT DETAIL
- NTS

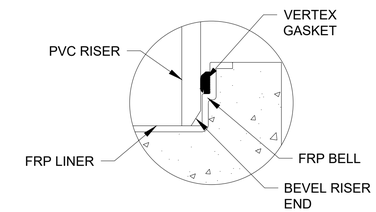

C JOINT DETAIL
- NTS

REGISTERED PROFESSIONAL ENGINEER MICHAEL J. FISHER No. C067194 CIVIL STATE OF CALIFORNIA
05/29/2020

DESIGN K ALACON
DRAWN K ALACON
CHECKED M FISHER
APPROVED M FISHER

WATERWORKS ENGINEERS
2260 Douglas Blvd, Suite 105 •Roseville, CA 95661 • 916-790-2888

CITY OF MORRO BAY
WATER RECLAMATION FACILITY
LIFT STATION AND OFFSITE PIPELINES

CIVIL
FM JUNCTION MANHOLE DETAILS

DATE MAY 2020
PROJECT NUMBER 17-082
DRAWING NUMBER 20-Y-2
SHEET NUMBER 157

L:\CAD\PROJECTS\17-082 MORRO BAY PS AND PIPELINE_(S)\PROJECT FILES\DELIVERABLES\1782D-20Y200.DWG

JOB NUMBER: 14-010 FILENAME: 1782D-20Y200.DWG PLOT DATE: 15-Jun-20 PLOT TIME: 10:58:17

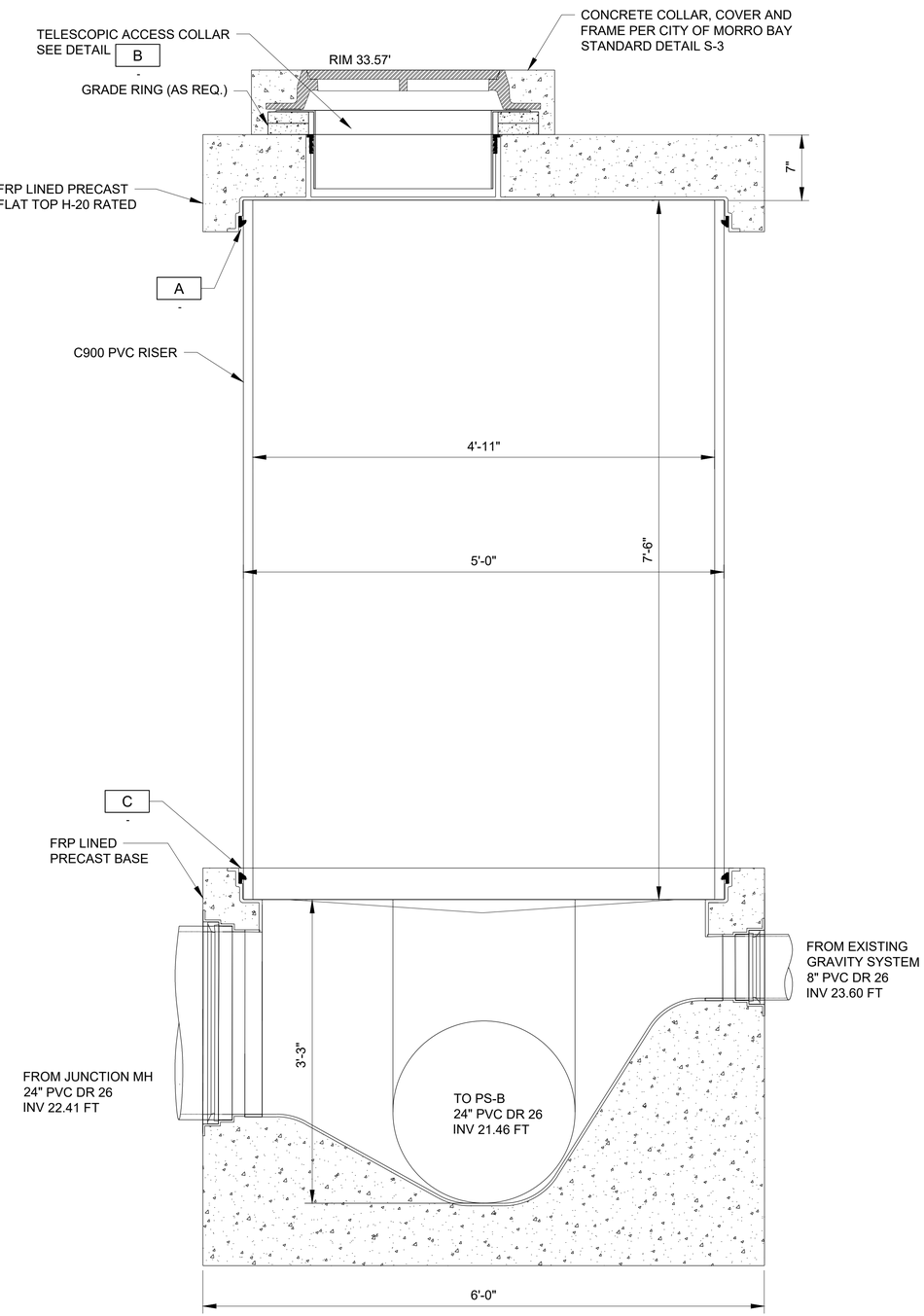

A SECTION
-- NTS

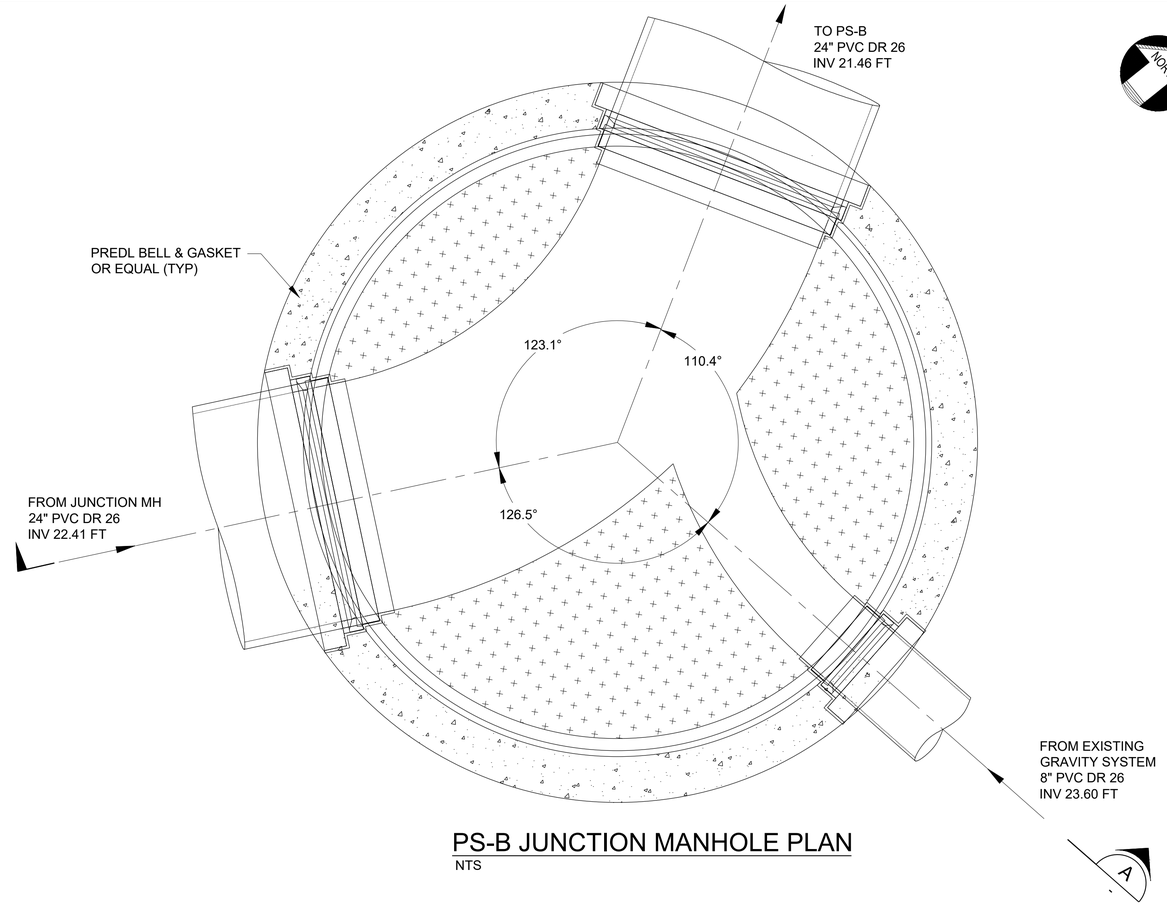

PS-B JUNCTION MANHOLE PLAN
NTS

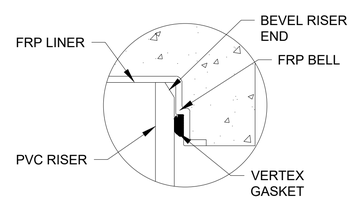

A JOINT DETAIL
- NTS

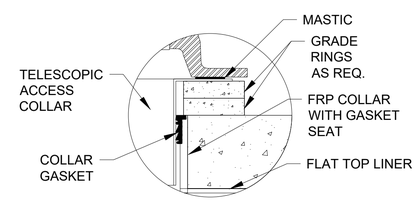

B JOINT DETAIL
- NTS

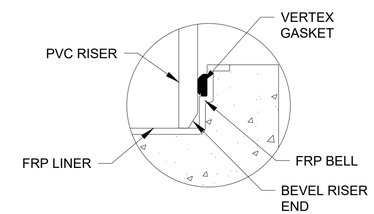

C JOINT DETAIL
- NTS

REGISTERED PROFESSIONAL ENGINEER
MICHAEL P. FISHER
No. C067194
CIVIL
STATE OF CALIFORNIA
05/29/2020

DESIGN K ALACON
DRAWN K ALACON
CHECKED M FISHER
APPROVED M FISHER

WATERWORKS ENGINEERS
2260 Douglas Blvd, Suite 105 • Roseville, CA 95661 • 916-790-2888

CITY OF MORRO BAY
WATER RECLAMATION FACILITY
LIFT STATION AND OFFSITE PIPELINES

CIVIL
PS-B JUNCTION MANHOLE DETAILS

DATE MAY 2020
PROJECT NUMBER 17-082
DRAWING NUMBER 20-Y-3
SHEET NUMBER 158

L:\CAD\PROJECTS\17-082 MORRO BAY PS AND PIPELINE_(S)\PROJECT FILES\DELIVERABLES\1782D-20Y200.DWG

JOB NUMBER: 14-010 FILENAME: 1782D-20Y200.DWG PLOT DATE: 15-Jun-20 PLOT TIME: 10:58:46

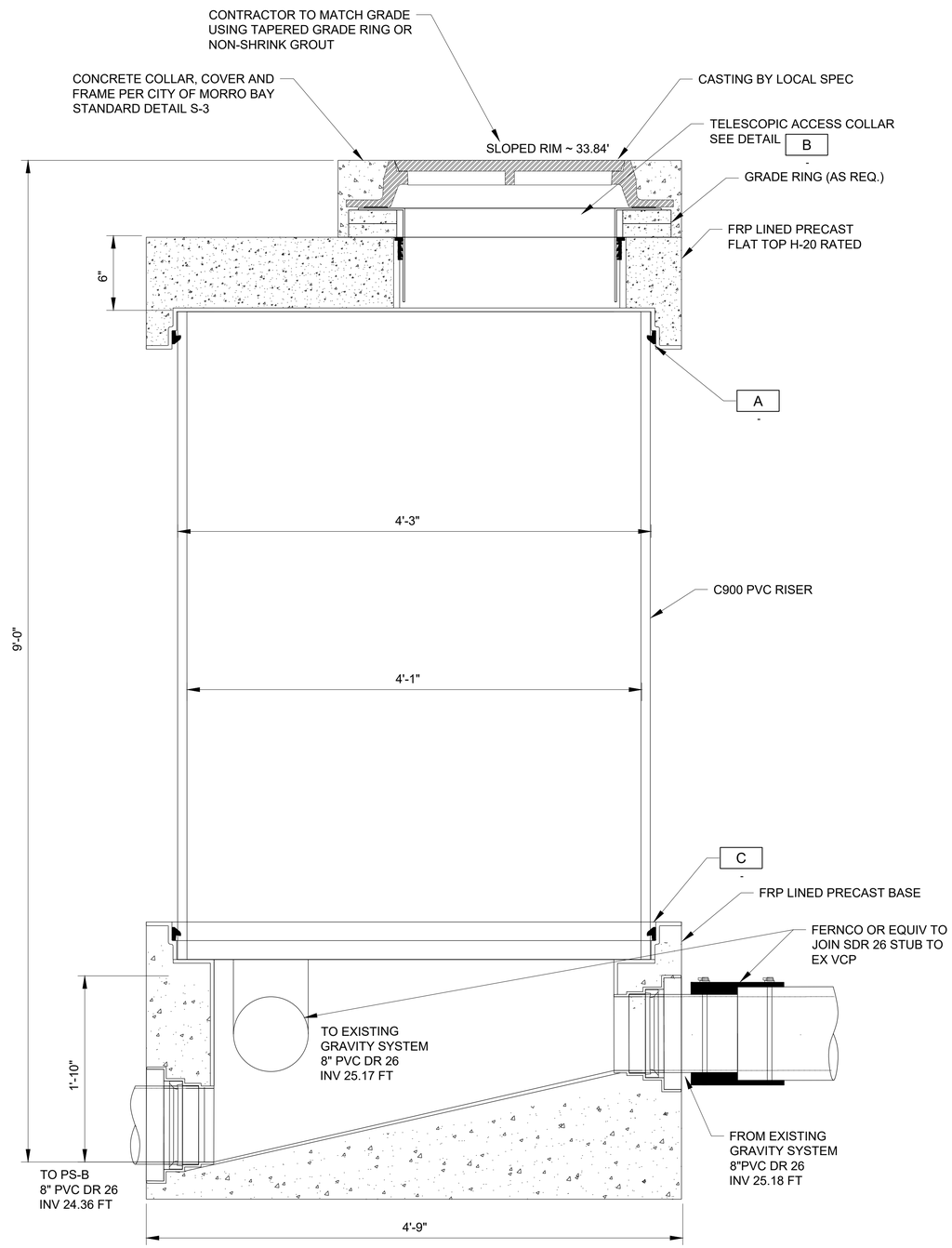

A SECTION
-- NTS

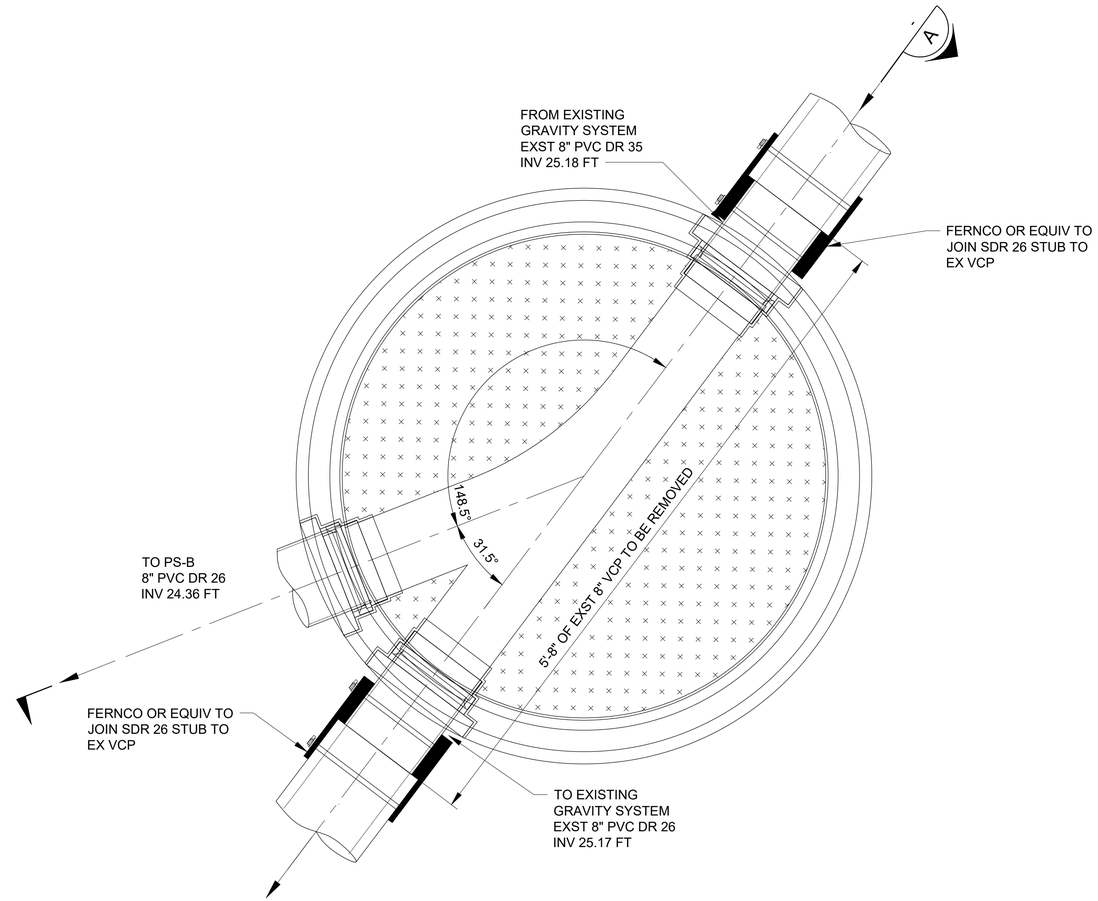

PS-B DIVERSION MANHOLE PLAN
NTS

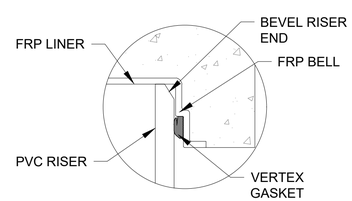

A JOINT DETAIL
- NTS

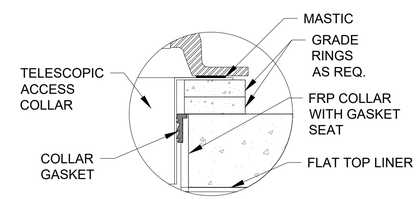

B JOINT DETAIL
- NTS

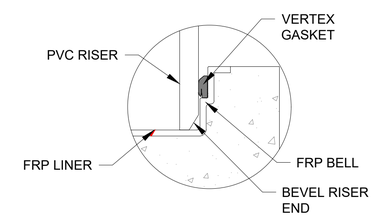

C JOINT DETAIL
- NTS

REGISTERED PROFESSIONAL ENGINEER MICHAEL P. FISHER No. C067194 CIVIL STATE OF CALIFORNIA
05/29/2020

DESIGN K ALACON
DRAWN K ALACON
CHECKED M FISHER
APPROVED M FISHER

WATERWORKS ENGINEERS
2260 Douglas Blvd, Suite 105 •Roseville, CA 95661 • 916-790-2888

CITY OF MORRO BAY
WATER RECLAMATION FACILITY LIFT STATION AND OFFSITE PIPELINES

CIVIL
PS-B DIVERSION MANHOLE DETAILS

DATE MAY 2020
PROJECT NUMBER 17-082
DRAWING NUMBER 20-Y-4
SHEET NUMBER 159

L:\CAD\PROJECTS\17-082 MORRO BAY PS AND PIPELINE_(S)\PROJECT FILES\DELIVERABLES\1782D-20Y200.DWG

JOB NUMBER: 14-010 FILENAME: 1782D-20Y200.DWG PLOT DATE: 15-Jun-20 PLOT TIME: 10:59:21

NOTES:

1. RENDERING IS FOR INFORMATIONAL PURPOSES ONLY. NOT FOR CONSTRUCTION.

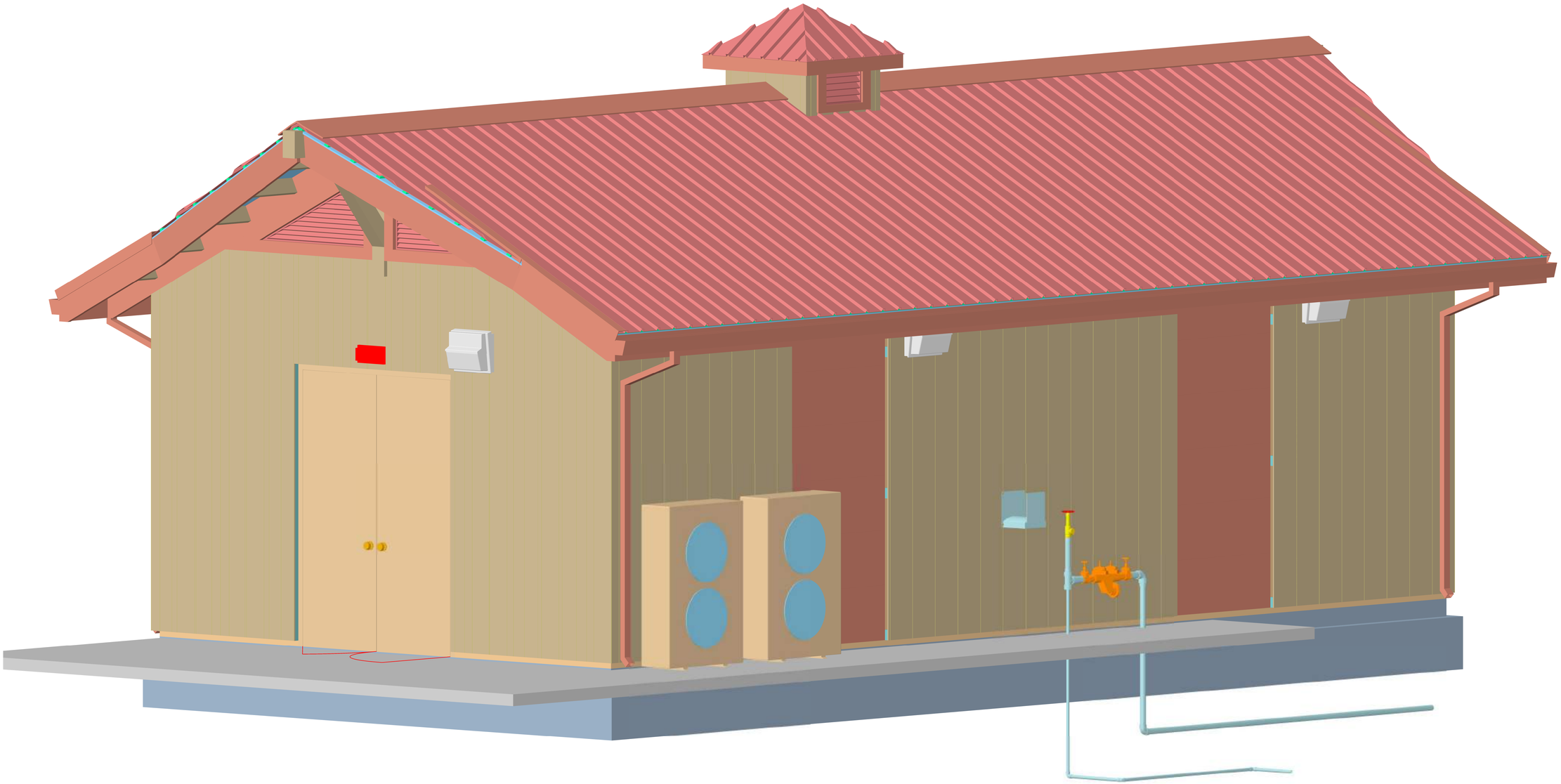

RENDERING
NTS

REGISTERED PROFESSIONAL ENGINEER
KRISTINA P. ALAGON
No. C70952
CIVIL
STATE OF CALIFORNIA
05-29-2020

DESIGNED K ALACON
DRAWN J MARTIN
CHECKED K ALACON
APPROVED M FISHER

WATERWORKS ENGINEERS
2260 Douglas Blvd., Suite 105 • Roseville, CA 95661 • 916-780-2888

CITY OF MORRO BAY
WATER RECLAMATION FACILITY
LIFT STATIONS AND OFFSITE PIPELINES

RENDERING
ELECTRICAL BUILDING RENDERING

DATE MAY 2020
PROJECT NUMBER 17-082
DRAWING NUMBER 20-R-1
SHEET NUMBER 160

FILENAME: 1782D-20R801.DGN PLOT DATE: 5/28/2020 12:24:10 PM

NOTES:

1. RENDERINGS ARE FOR INFORMATIONAL PURPOSES ONLY. NOT FOR CONSTRUCTION.

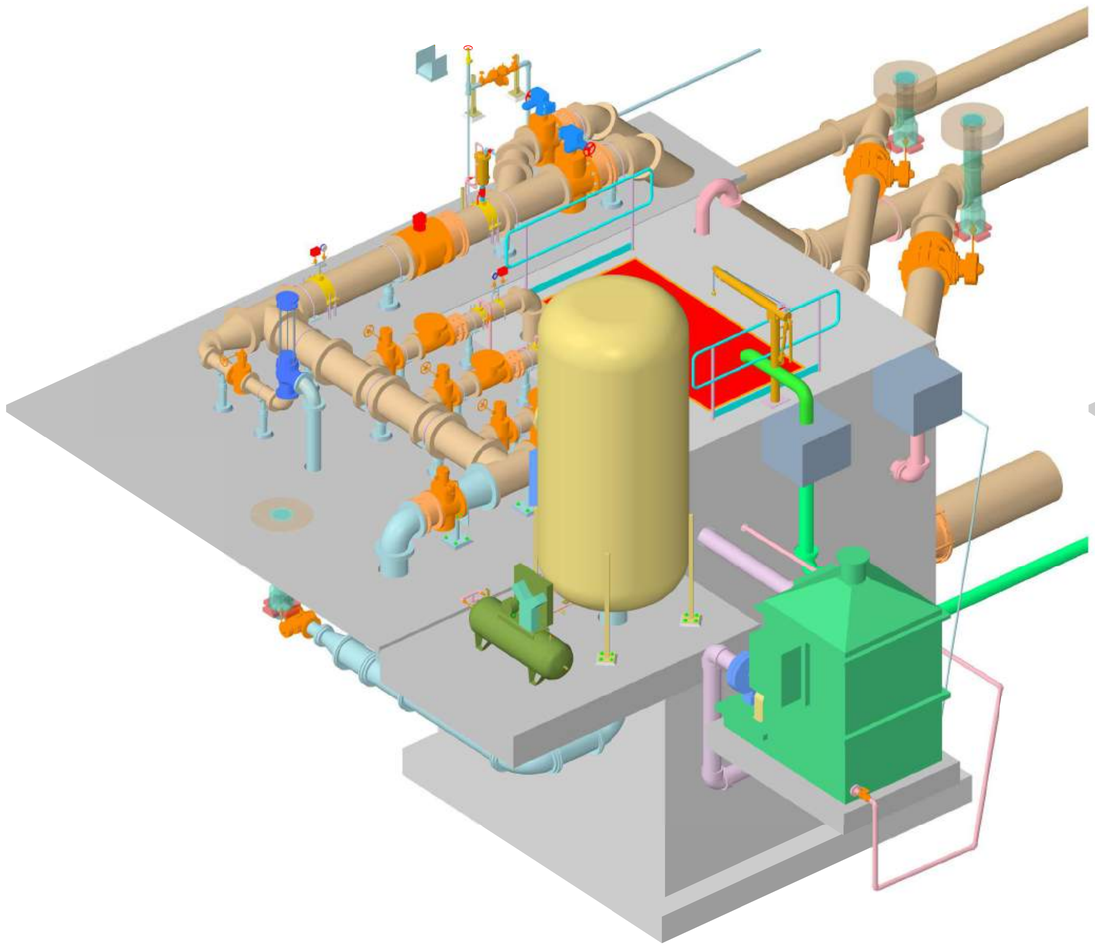

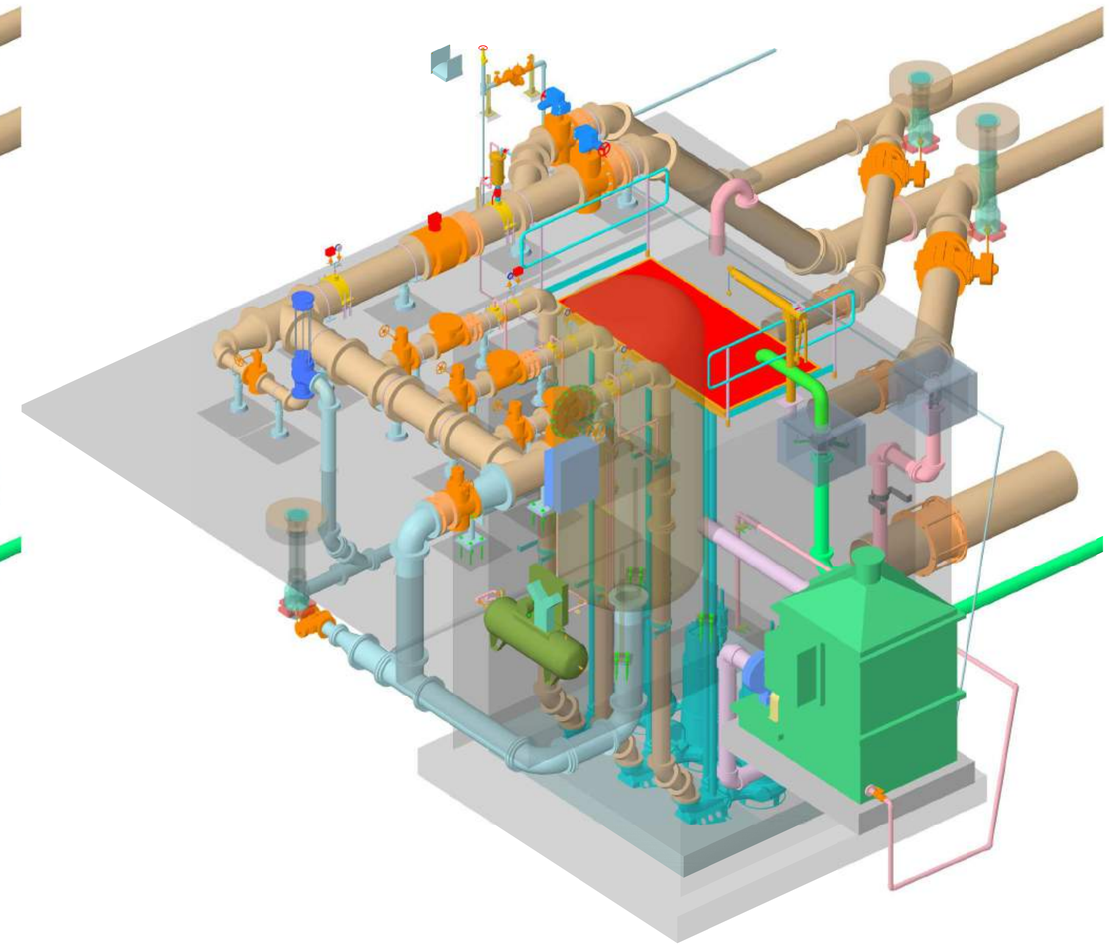

RENDERINGS

NTS

REGISTERED PROFESSIONAL ENGINEER
KRISTINA P. ALAGON
No. C70952
CIVIL
STATE OF CALIFORNIA
05-29-2020

DESIGNED K ALACON
DRAWN J MARTIN
CHECKED K ALACON
APPROVED M FISHER

WATERWORKS ENGINEERS
2260 Douglas Blvd., Suite 105 • Roseville, CA 95661 • 916-780-2888

CITY OF MORRO BAY
WATER RECLAMATION FACILITY
LIFT STATIONS AND OFFSITE PIPELINES

RENDERING
PUMP STATION RENDERINGS

DATE MAY 2020
PROJECT NUMBER 17-082
DRAWING NUMBER 20-R-2
SHEET NUMBER 161

FILENAME: 1782D-20R802.DGN PLOT DATE: 5/28/2020 12:29:02 PM

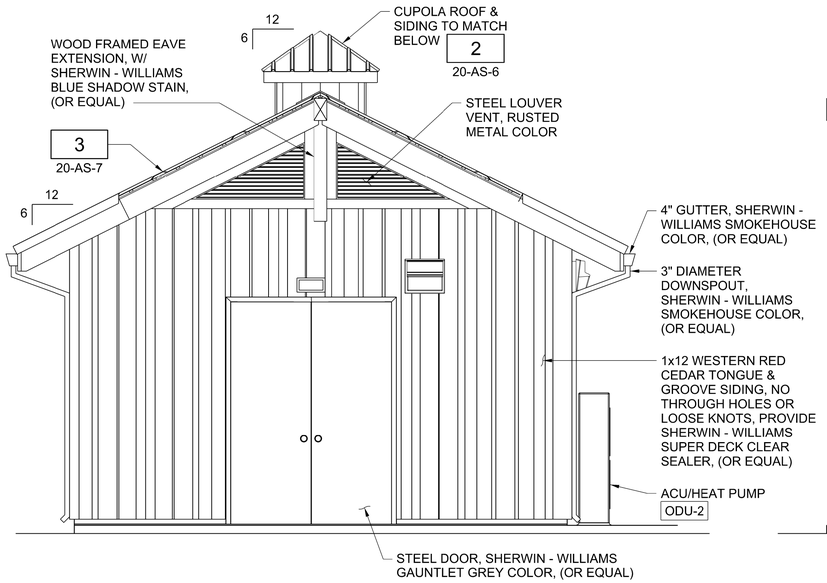

A 20-AS-2 NORTH ELEVATION
3/8" = 1'-0"

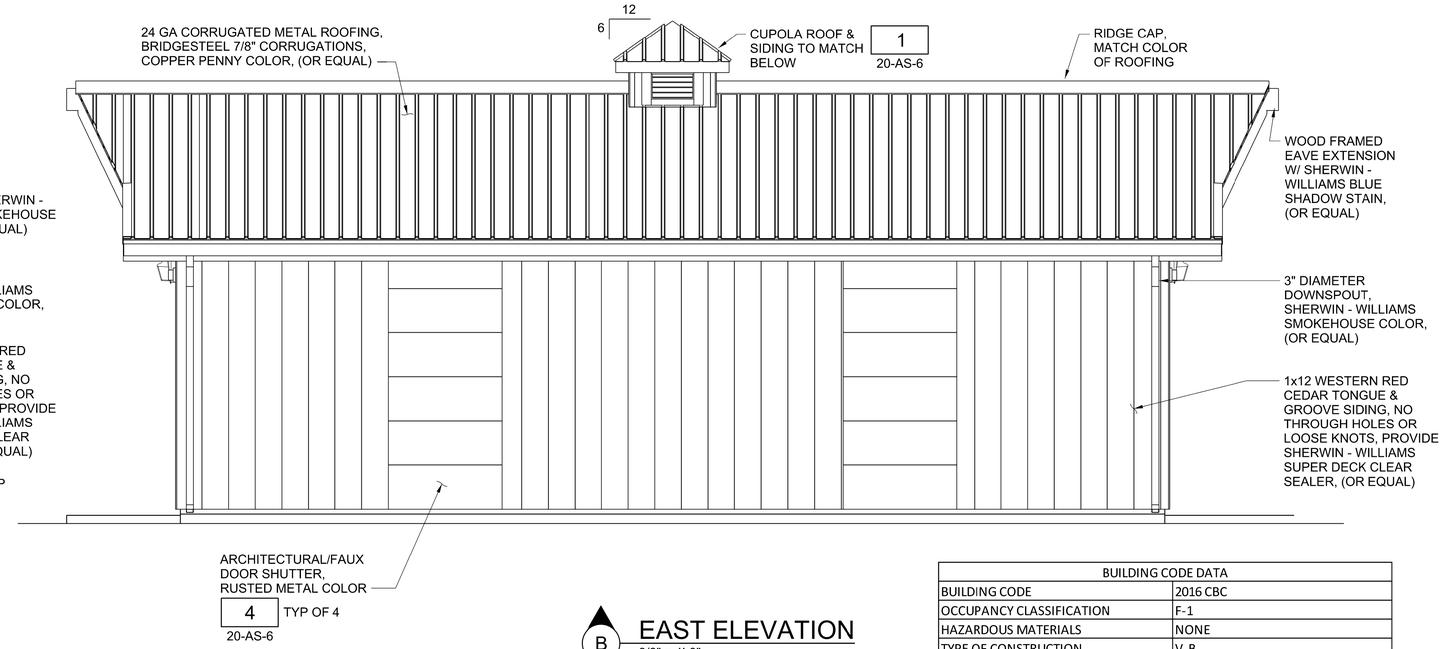

B 20-AS-2 EAST ELEVATION
3/8" = 1'-0"

BUILDING CODE DATA	
BUILDING CODE	2016 CBC
OCCUPANCY CLASSIFICATION	F-1
HAZARDOUS MATERIALS	NONE
TYPE OF CONSTRUCTION	V-B
FIRE SUPRESSION	FIRE EXTINGUISHERS
NUMBER OF STORIES ABOVE GRADE	1 ACTUAL 1 ALLOWABLE (F-1 OCCUPANCY)
BUILDING HEIGHT ABOVE GRADE	17'-4" ACTUAL 40'-0" ALLOWABLE
BUILDING AREAS	533 SQFT
OCCUPANT LOAD FACTOR	100 SQFT/PERSON
OCCUPANT LOAD	5 PERSONS
TRAVEL DISTANCE	17'-4" MAX ACTUAL 175'-0" ALLOWABLE

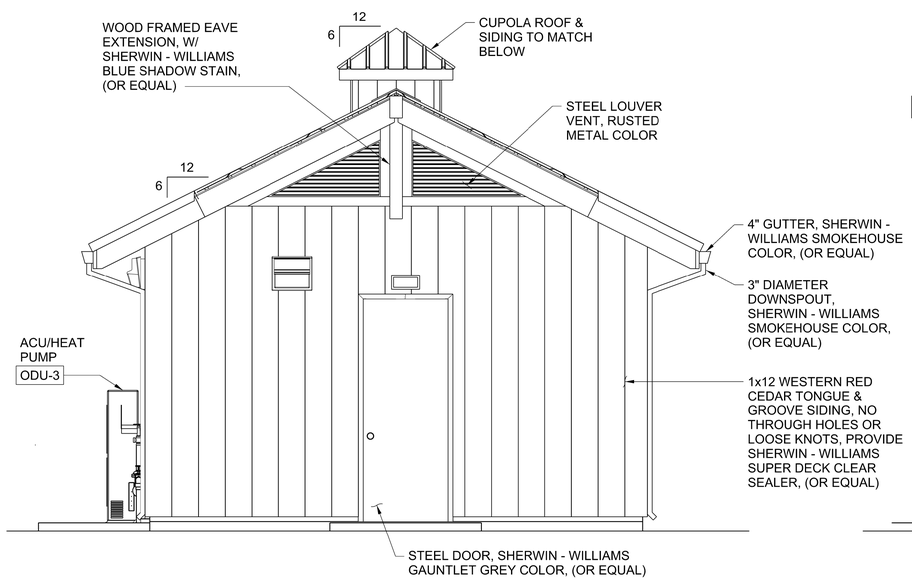

C 20-AS-2 SOUTH ELEVATION
3/8" = 1'-0"

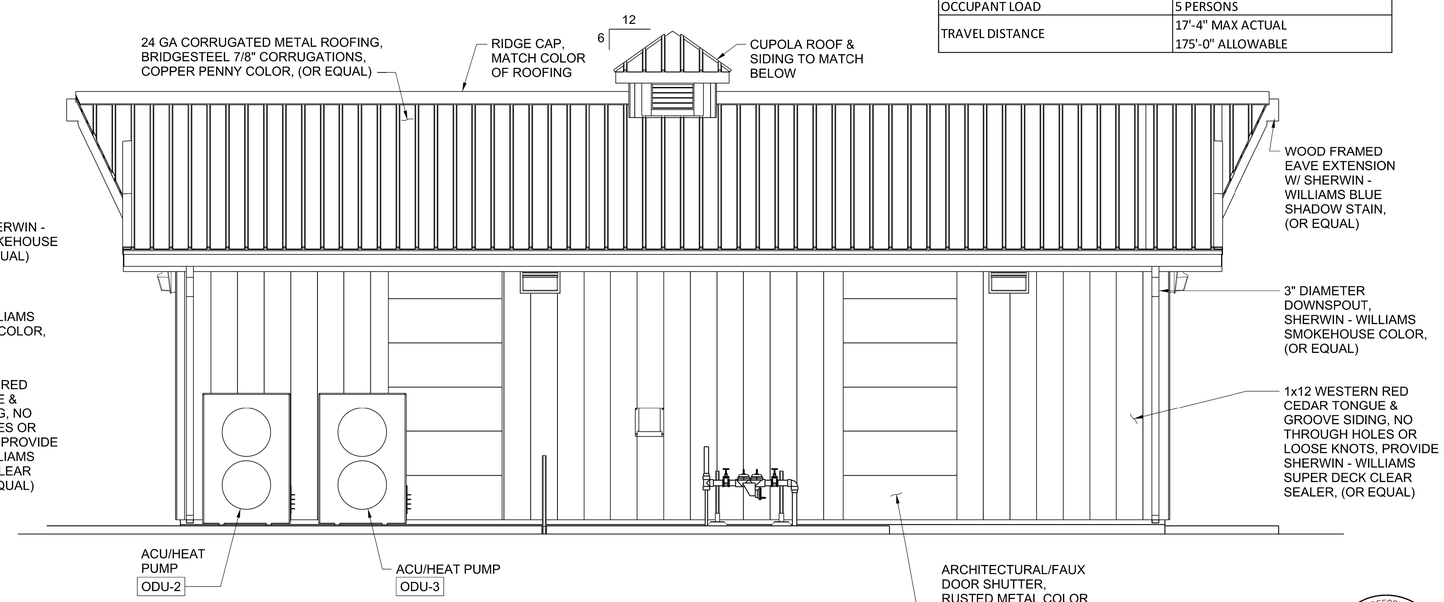

D 20-AS-2 WEST ELEVATION
3/8" = 1'-0"

2 0 2 4 FEET
SCALE 3/8"=1'-0"

REGISTERED PROFESSIONAL ENGINEER ANDREW L. LINDEMAN No. C88058 CIVIL STATE OF CALIFORNIA
05-29-2020

DESIGNED A LINDEMAN
DRAWN J MARTIN
CHECKED J KELLOGG
APPROVED M FISHER

WATERWORKS ENGINEERS
2260 Douglas Blvd., Suite 105 • Roseville, CA 95661 • 916-780-2888

CITY OF MORRO BAY
WATER RECLAMATION FACILITY
LIFT STATIONS AND OFFSITE PIPELINES

ARCHITECTURAL / STRUCTURAL
PUMP STATION B
ELECTRICAL BUILDING
ELEVATIONS

DATE MAY 2020
PROJECT NUMBER 17-082
DRAWING NUMBER 20-AS-1
SHEET NUMBER 162

FILENAME: 1782D-20AS401.DGN PLOT DATE: 5/28/2020 12:15:39 PM

NOTES:

1. SEE DWG G-6 FOR DOOR SCHEDULE.

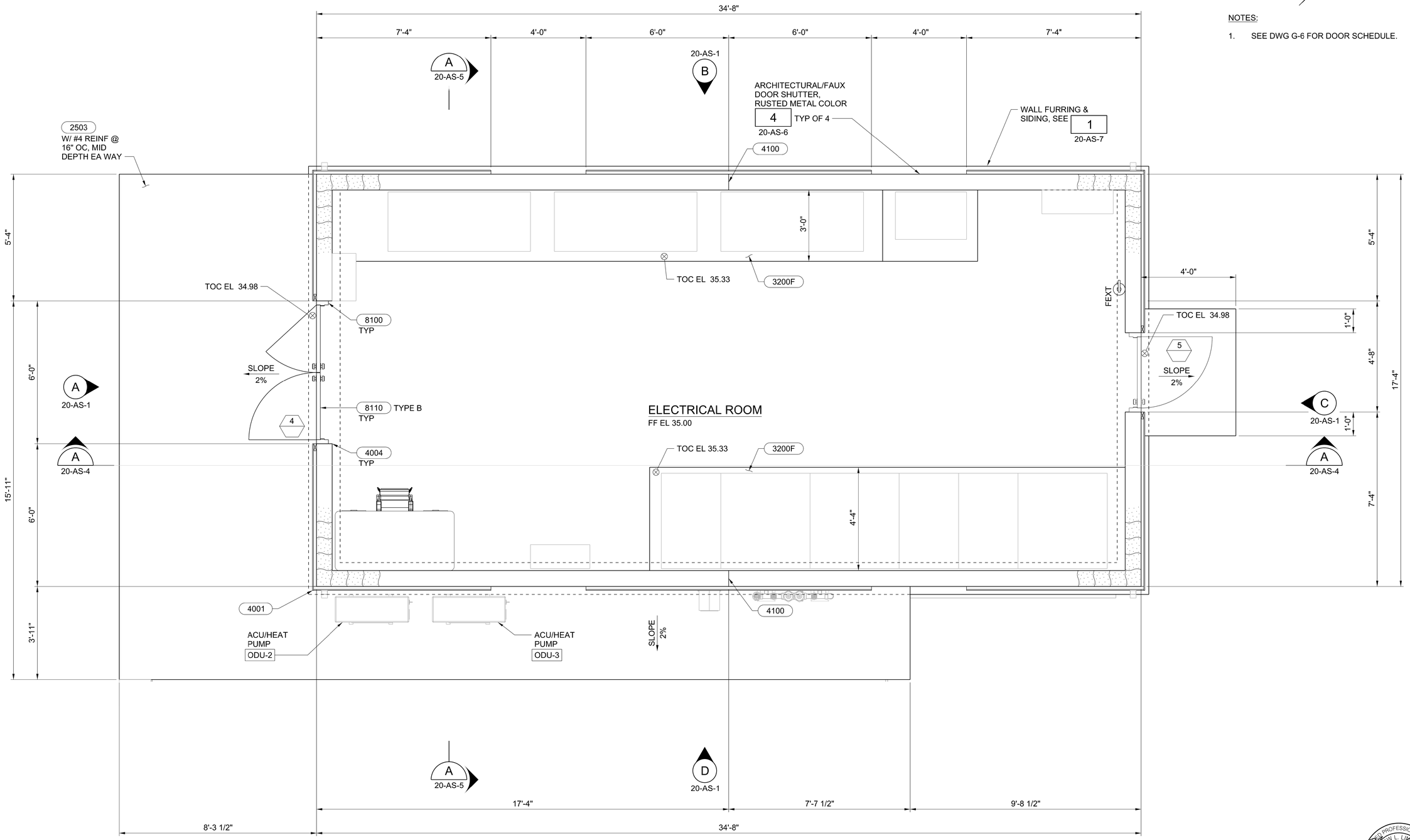

PUMP STATION A ELECTRICAL BUILDING FLOOR PLAN

1/2" = 1'-0"

2 0 2 4 FEET

SCALE 1/2"=1'-0"

REGISTERED PROFESSIONAL ENGINEER ANDREW L. LINDEMAN No. C88058 CIVIL STATE OF CALIFORNIA

05-29-2020

DESIGNED A LINDEMAN
DRAWN J MARTIN
CHECKED J KELLOGG
APPROVED M FISHER

WATERWORKS ENGINEERS
2260 Douglas Blvd., Suite 105 • Roseville, CA 95661 • 916-780-2888

CITY OF MORRO BAY
WATER RECLAMATION FACILITY
LIFT STATIONS AND OFFSITE PIPELINES

ARCHITECTURAL / STRUCTURAL
PUMP STATION B ELECTRICAL BUILDING PLAN

DATE MAY 2020
PROJECT NUMBER 17-082
DRAWING NUMBER 20-AS-2
SHEET NUMBER 163

FILENAME: 1782D-20AS101.DGN PLOT DATE: 5/28/2020 11:49:44 AM

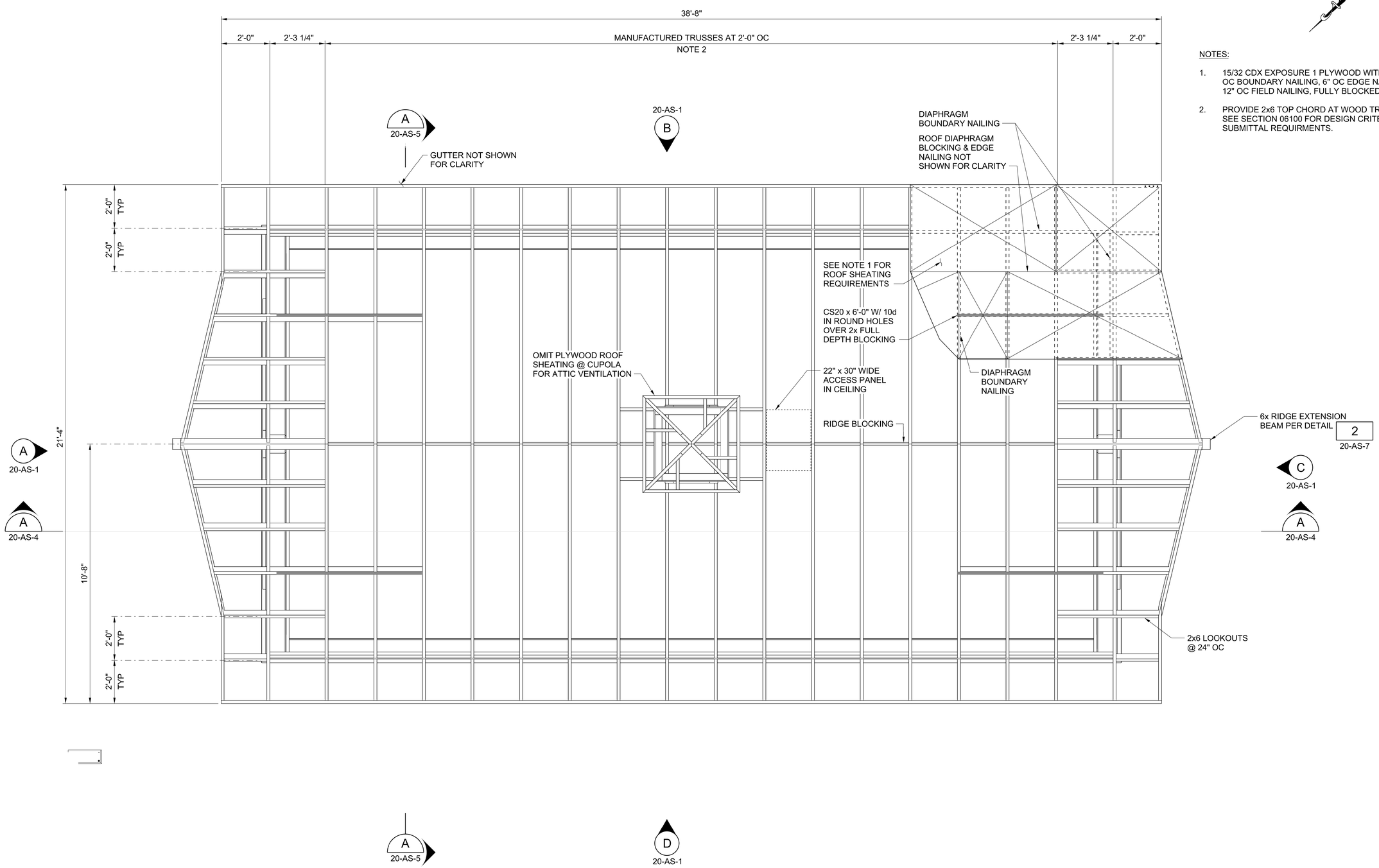

NOTES:

1. 15/32 CDX EXPOSURE 1 PLYWOOD WITH 10d @ 4" OC BOUNDARY NAILING, 6" OC EDGE NAILING & 12" OC FIELD NAILING, FULLY BLOCKED.
2. PROVIDE 2x6 TOP CHORD AT WOOD TRUSSES. SEE SECTION 06100 FOR DESIGN CRITERIA AND SUBMITTAL REQUIRMENTS.

PUMP STATION B ROOF FRAMING PLAN

1/2" = 1'-0"

2 0 2 4 FEET
SCALE 1/2"=1'-0"

REGISTERED PROFESSIONAL ENGINEER ANDREW L. LINDEMAN No. C88058 CIVIL STATE OF CALIFORNIA
05-29-2020

DESIGNED A LINDEMAN
DRAWN J MARTIN
CHECKED J KELLOGG
APPROVED M FISHER

WATERWORKS ENGINEERS
2260 Douglas Blvd., Suite 105 • Roseville, CA 95661 • 916-780-2888

CITY OF MORRO BAY
WATER RECLAMATION FACILITY
LIFT STATIONS AND OFFSITE PIPELINES

ARCHITECTURAL / STRUCTURAL
PUMP STATION B
ELECTRICAL BUILDING
ROOF FRAMING PLAN

DATE MAY 2020
PROJECT NUMBER 17-082
DRAWING NUMBER 20-AS-3
SHEET NUMBER 164

FILENAME: 1782D-20AS102.DGN PLOT DATE: 5/28/2020 11:54:40 AM

NOTES:

1. INSTALL EDGE TRIM WHERE GYPSUM WALL BOARD ABUTS ANOTHER MATERIAL AT WALLS AND CEILING. PROVIDE JOINT SEALANT BETWEEN TRIM AND OTHER MATERIAL PRIOR TO PAINTING.

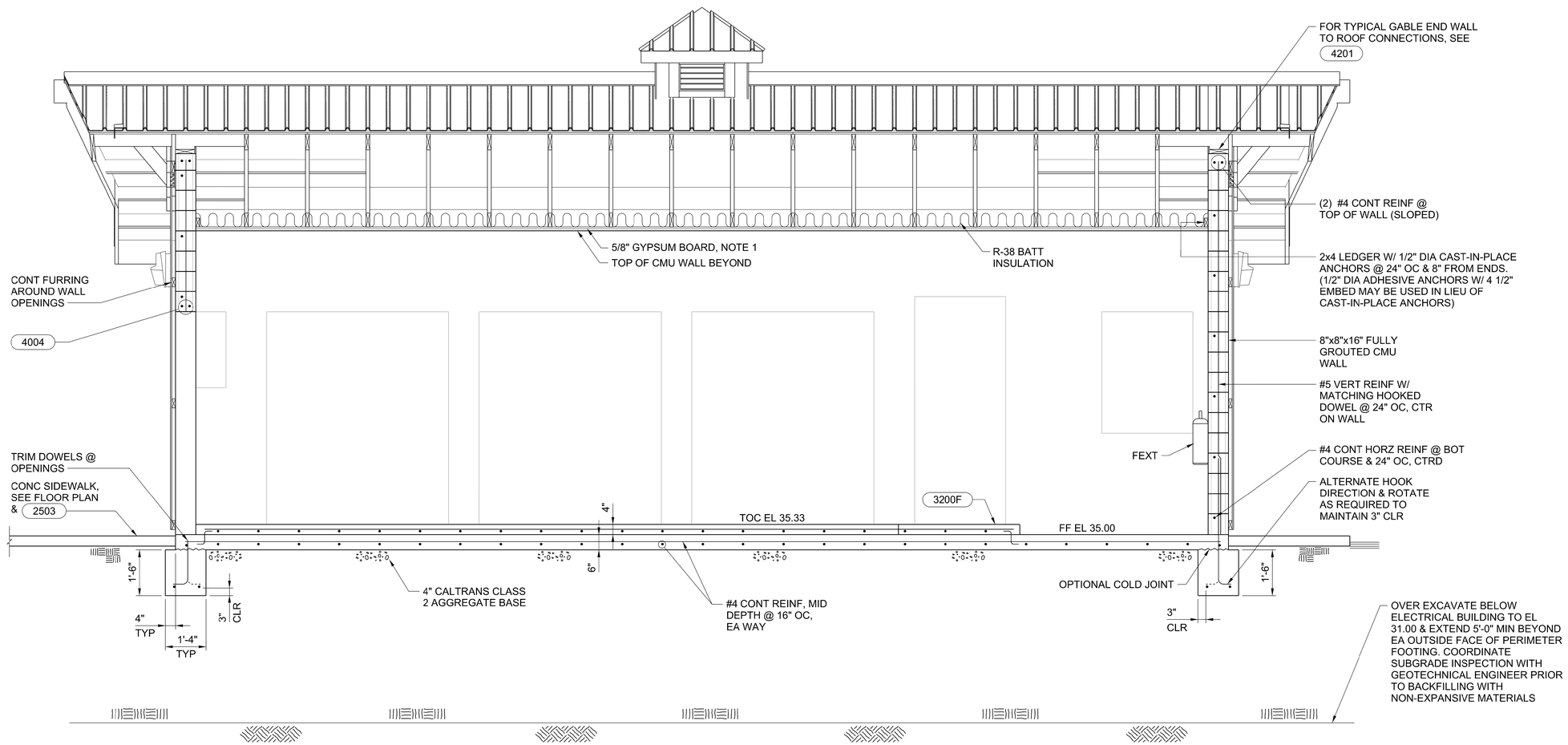

A SECTION
20-AS-2
20-AS-3
1/2" = 1'-0"

2 0 2 4 FEET
SCALE 1/2"=1'-0"

REGISTERED PROFESSIONAL ENGINEER ANDREW L. LINDEMAN No. C88058 CIVIL STATE OF CALIFORNIA
05-29-2020

DESIGNED A LINDEMAN
DRAWN J MARTIN
CHECKED J KELLOGG
APPROVED M FISHER

WATERWORKS ENGINEERS
2260 Douglas Blvd., Suite 105 • Roseville, CA 95661 • 916-780-2888

CITY OF MORRO BAY
WATER RECLAMATION FACILITY
LIFT STATIONS AND OFFSITE PIPELINES

ARCHITECTURAL / STRUCTURAL
PUMP STATION B
ELECTRICAL BUILDING
SECTION

DATE MAY 2020
PROJECT NUMBER 17-082
DRAWING NUMBER 20-AS-4
SHEET NUMBER 165

FILENAME: 1782D-20AS201.DGN PLOT DATE: 5/28/2020 11:58:50 AM

NOTES:

1. INSTALL EDGE TRIM WHERE GYPSUM WALL BOARD ABUTS ANOTHER MATERIAL AT WALLS AND CEILING. PROVIDE JOINT SEALANT BETWEEN TRIM AND OTHER MATERIAL PRIOR TO PAINTING.

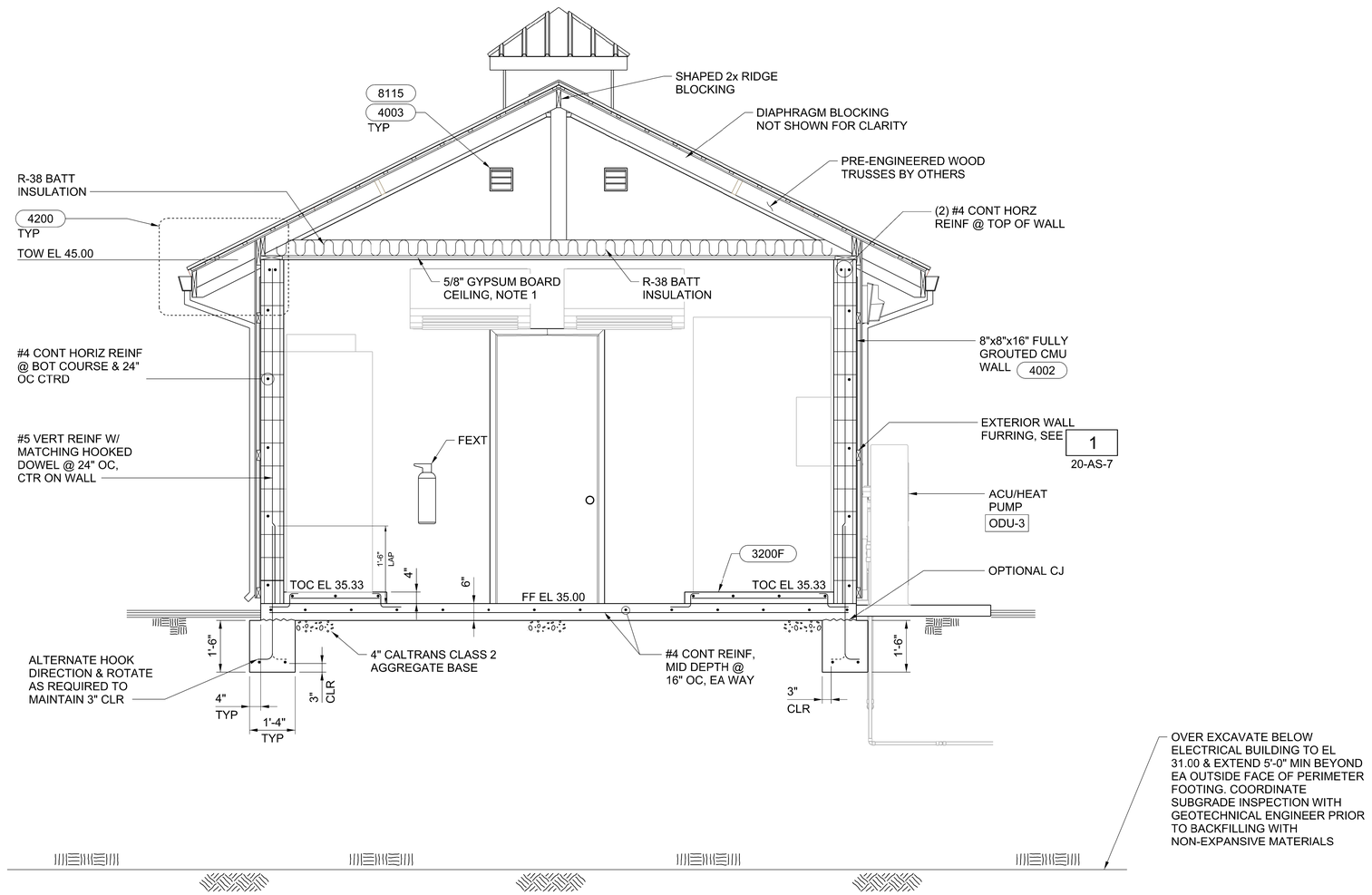

A SECTION
20-AS-2
20-AS-3
1/2" = 1'-0"

2 0 2 4 FEET
SCALE 1/2"=1'-0"

REGISTERED PROFESSIONAL ENGINEER ANDREW L. LINDEMAN No. C88058 CIVIL STATE OF CALIFORNIA
05-29-2020

DESIGNED A LINDEMAN
DRAWN J MARTIN
CHECKED J KELLOGG
APPROVED M FISHER

WATERWORKS ENGINEERS
2260 Douglas Blvd., Suite 105 • Roseville, CA 95661 • 916-780-2888

CITY OF MORRO BAY
WATER RECLAMATION FACILITY
LIFT STATIONS AND OFFSITE PIPELINES

ARCHITECTURAL / STRUCTURAL
PUMP STATION B
ELECTRICAL BUILDING
SECTION

DATE MAY 2020
PROJECT NUMBER 17-082
DRAWING NUMBER 20-AS-5
SHEET NUMBER 166

FILENAME: 1782D-20AS202.DGN PLOT DATE: 5/28/2020 12:03:05 PM

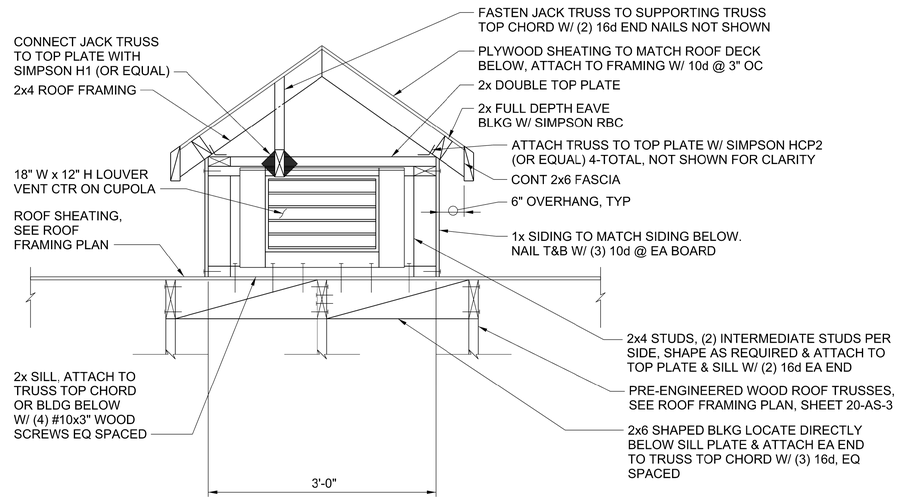

1 DETAIL
20-AS-1 1" = 1'-0"

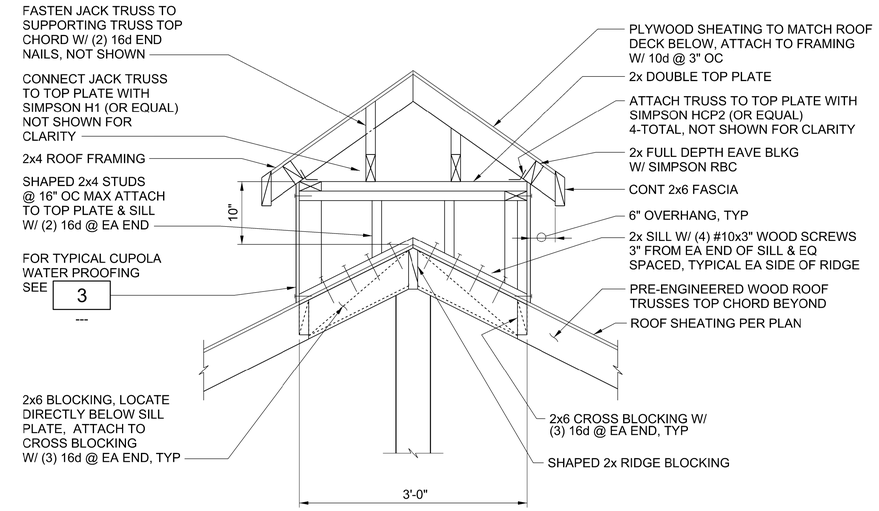

2 DETAIL
20-AS-1 1" = 1'-0"

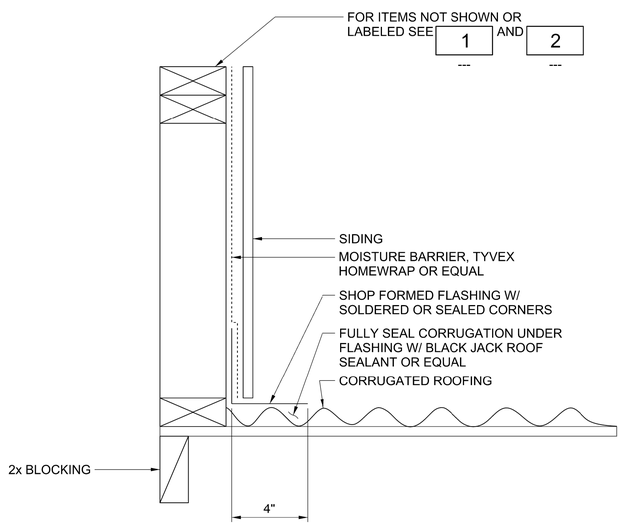

3 TYPICAL CUPOLA WATER PROOFING
--- 3" = 1'-0"

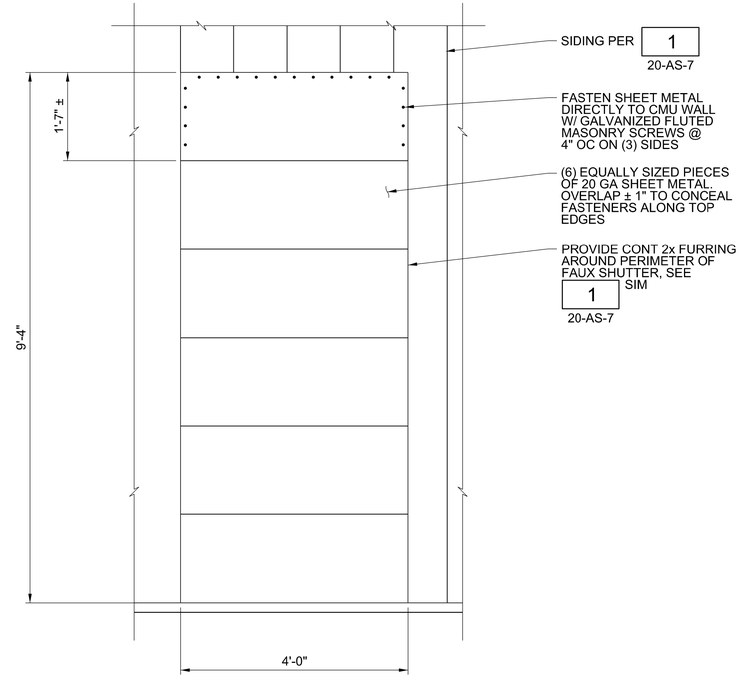

4 DETAIL
20-AS-1
20-AS-2
3/4" = 1'-0"

1 0 1 2 FEET
SCALE 3/4"=1'-0"

1 0 1 2 FEET
SCALE 1"=1'-0"

3" 0 3" 6" INCHES
SCALE 3"=1'-0"

REGISTERED PROFESSIONAL ENGINEER ANDREW L. LINDEMAN No. C88058 CIVIL STATE OF CALIFORNIA
05-29-2020

DESIGNED A LINDEMAN
DRAWN J MARTIN
CHECKED J KELLOGG
APPROVED M FISHER

WATERWORKS ENGINEERS

CITY OF MORRO BAY
WATER RECLAMATION FACILITY
LIFT STATIONS AND OFFSITE PIPELINES

ARCHITECTURAL / STRUCTURAL
PUMP STATION B
ELECTRICAL BUILDING
ARCHITECTURAL DETAILS

DATE MAY 2020
PROJECT NUMBER 17-082
DRAWING NUMBER 20-AS-6
SHEET NUMBER 167

FILENAME: 1782D-20AS301.DGN PLOT DATE: 5/28/2020 12:07:23 PM

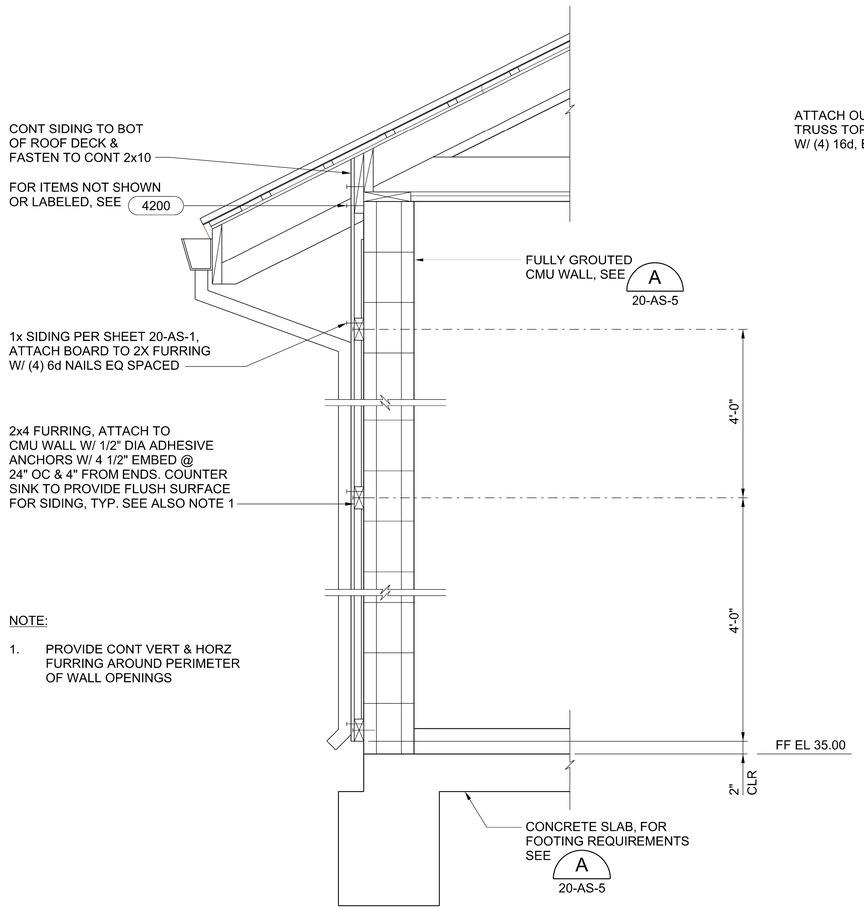

NOTE:

1. PROVIDE CONT VERT & HORZ FURRING AROUND PERIMETER OF WALL OPENINGS

1 EXTERIOR WALL FURRING DETAIL
20-AS-2 1" = 1'-0"

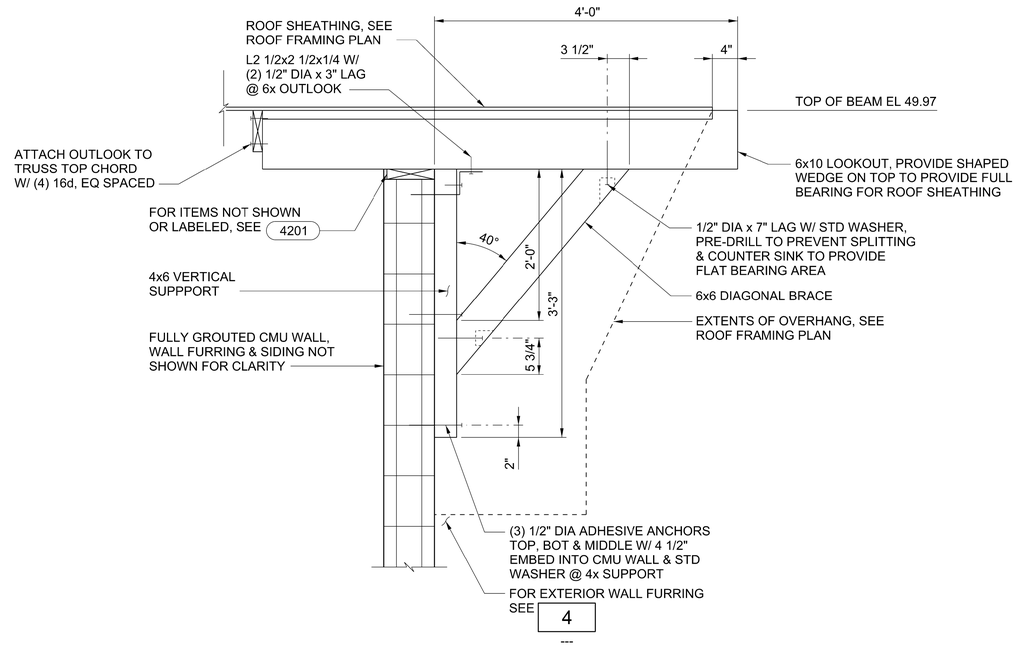

2 EXTENDED OVERHANG DETAIL
20-AS-3 1" = 1'-0"

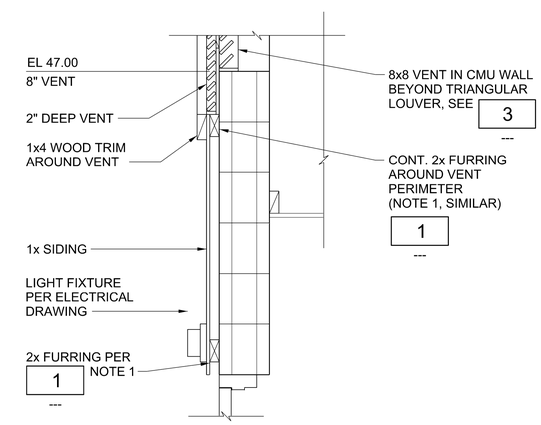

4 DETAIL
--- 1" = 1'-0"

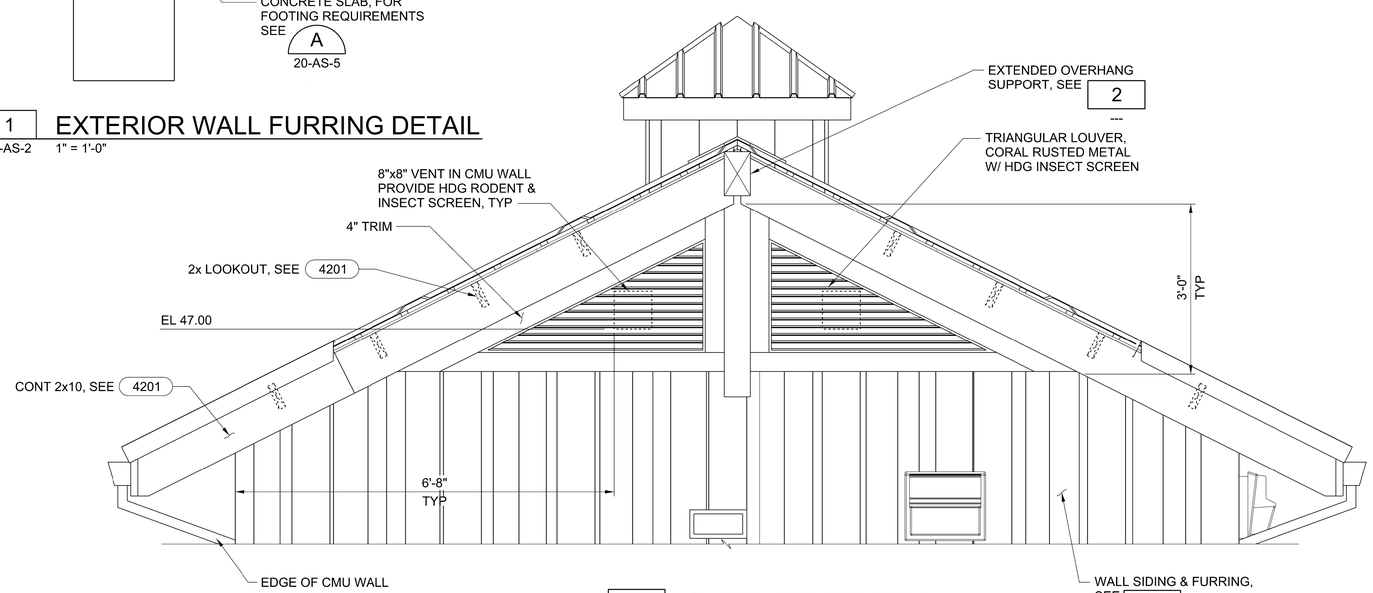

3 GABEL VENT DETAIL
20-AS-1 3/4" = 1'-0"

1 0 1 2 FEET
SCALE 3/4"=1'-0"
1 0 1 2 FEET
SCALE 1"=1'-0"

REGISTERED PROFESSIONAL ENGINEER ANDREW L. LINDEMAN No. C88058 CIVIL STATE OF CALIFORNIA
05-29-2020

DESIGNED A LINDEMAN
DRAWN J MARTIN
CHECKED J KELLOGG
APPROVED M FISHER

WATERWORKS ENGINEERS
2260 Douglas Blvd., Suite 105 • Roseville, CA 95661 • 916-780-2888

CITY OF MORRO BAY
WATER RECLAMATION FACILITY LIFT STATIONS AND OFFSITE PIPELINES

ARCHITECTURAL / STRUCTURAL
PUMP STATION B ELECTRICAL BUILDING ARCHITECTURAL DETAILS

DATE MAY 2020
PROJECT NUMBER 17-082
DRAWING NUMBER 20-AS-7
SHEET NUMBER 168

FILENAME: 1782D-20AS302.DGN PLOT DATE: 5/28/2020 12:11:53 PM

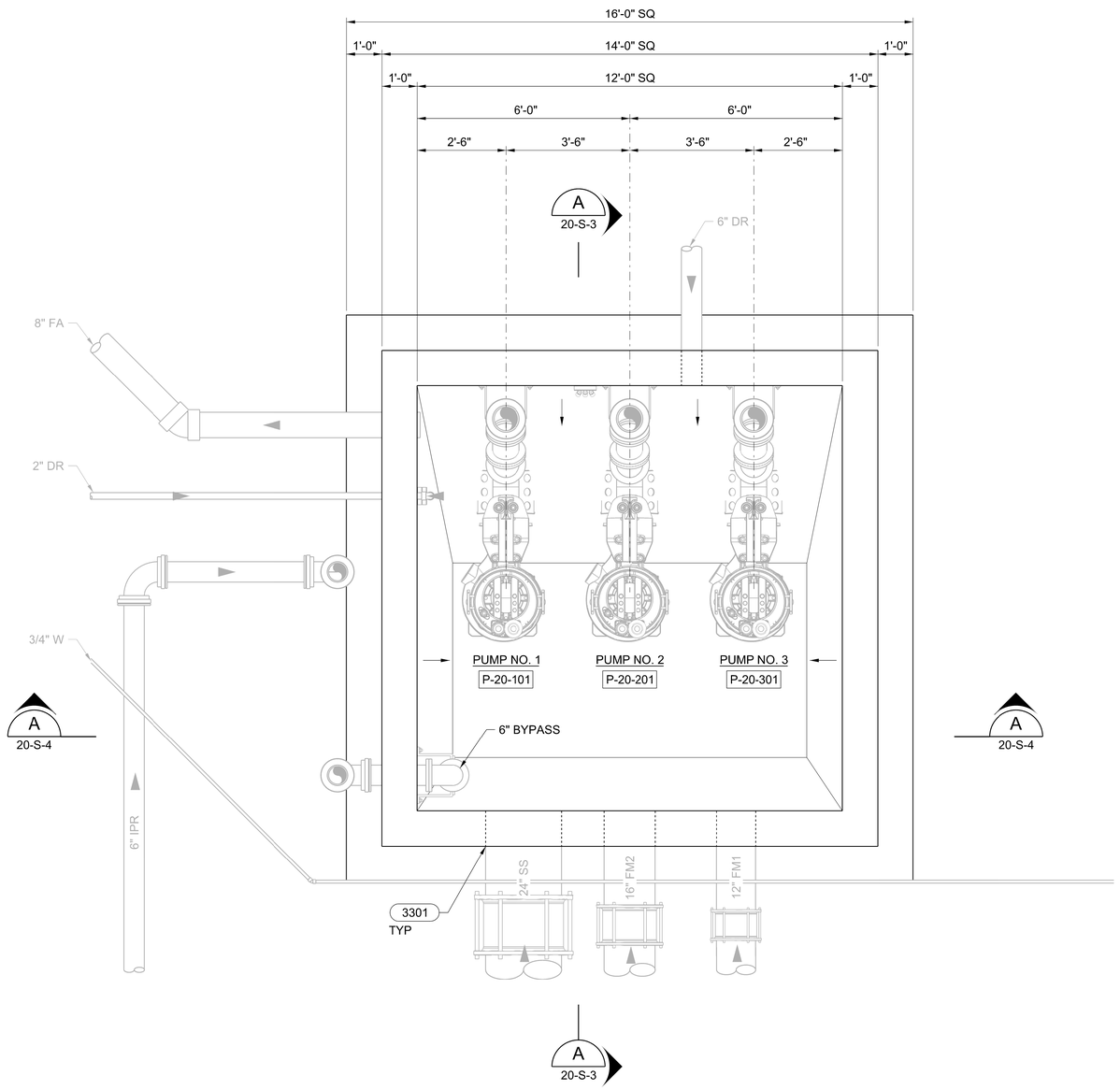

LOWER PLAN

1/2" = 1'-0"

NOTES:

1. PUMP STATION DESIGN IS BASED ON FLYGT PUMPS LISTED IN SPECIFICATION SECTION 11300.

2 0 2 4 FEET

SCALE 1/2"=1'-0"

REGISTERED PROFESSIONAL ENGINEER
ANDREW L. LINDEMAN
No. C88058
CIVIL
STATE OF CALIFORNIA
05-29-2020

DESIGNED A LINDEMAN
DRAWN J MARTIN
CHECKED J KELLOGG
APPROVED M FISHER

WATERWORKS ENGINEERS
2260 Douglas Blvd., Suite 105 • Roseville, CA 95661 • 916-780-2888

CITY OF MORRO BAY
WATER RECLAMATION FACILITY
LIFT STATIONS AND OFFSITE PIPELINES

STRUCTURAL
PUMP STATION
LOWER PLAN

DATE MAY 2020
PROJECT NUMBER 17-082
DRAWING NUMBER 20-S-1
SHEET NUMBER 169

FILENAME: 1782D-20S100.DGN PLOT DATE: 5/28/2020 12:36:35 PM

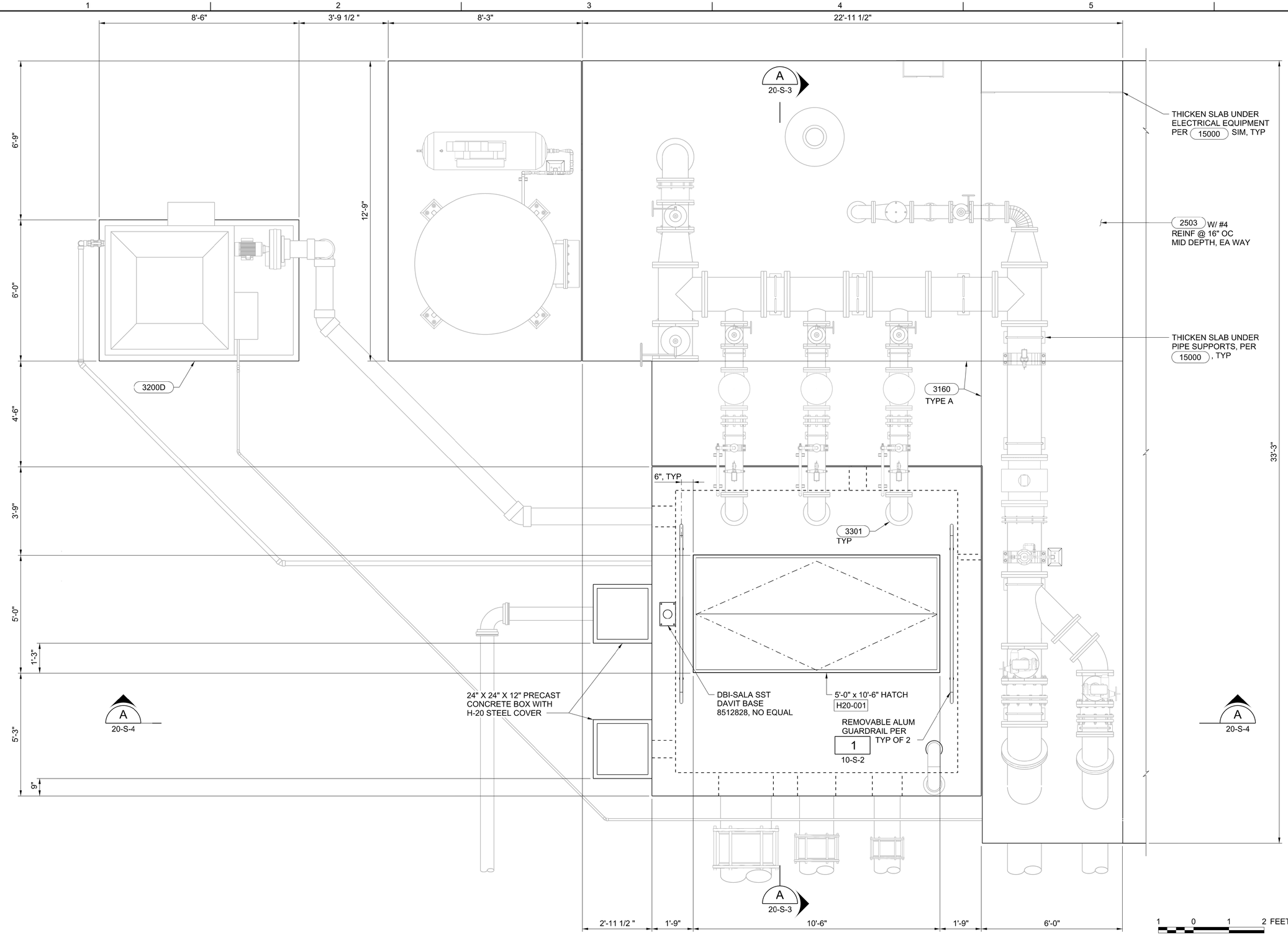

TOP PLAN

1/2" = 1'-0"

1 0 1 2 FEET
SCALE 3/4"=1'-0"

2 0 2 4 FEET
SCALE 1/2"=1'-0"

REGISTERED PROFESSIONAL ENGINEER ANDREW L. LINDEMAN No. C88058 CIVIL STATE OF CALIFORNIA
05-29-2020

DESIGNED A LINDEMAN
DRAWN J MARTIN
CHECKED J KELLOGG
APPROVED M FISHER

WATERWORKS ENGINEERS
2260 Douglas Blvd., Suite 105 • Roseville, CA 95661 • 916-780-2888

CITY OF MORRO BAY
WATER RECLAMATION FACILITY
LIFT STATIONS AND OFFSITE PIPELINES

STRUCTURAL
PUMP STATION B
TOP PLAN

DATE MAY 2020
PROJECT NUMBER 17-082
DRAWING NUMBER 20-S-2
SHEET NUMBER 170

FILENAME: 1782D-20S101.DGN PLOT DATE: 5/28/2020 12:41:50 PM

EXCAVATION/GRADING NOTES:

1. THE LOWER 4 FEET OF THE WET WELL EXCAVATION SHOULD BE PERFORMED WITH CAUTION, USING AN EXCAVATOR TYPE OF EQUIPMENT, AND SUCH THAT CONSTRUCTION EQUIPMENT WILL NOT TRAVERSE ACROSS THE BOTTOM OF THE EXCAVATION.
2. EXCAVATIONS FOR THE WET WELL SHOULD BE DEEPENED TO ALLOW AT LEAST 2 FEET OF CRUSHED ROCK (AGGREGATE FOR STABILIZATION) ENCASED IN A GEOTEXTILE/STABILIZATION TO BE PLACED ON THE UINDISTURBED SUBGRADE AT THE BOTTOM OF THE EXCAVATION.
3. PLACE THE AGGREGATE FOR STABILIZATION IN (2) 1 FOOT LIFTS. THE FIRST LIFT SHOULD BE PLACED WITH AN EXCAVATOR OR LIGHT EQUIPMENT SUCH AS A BOB CAT. CONSOLIDATE EACH LIFT W/ A MINIMUM OF (4) PASSES WITH A VIBRATORY PLATE OR BY TRACK WALKING WITH A WIDE-TRACKED DOZER. THE SECOND LIFT MAY BE PLACED USING A WIDE-TRACK DOZER OR SIMILAR EQUIPMENT.
4. EXTEND THE AGGREGATE FOR STABILIZATION 3 FEET MINIMUM BEYOND THE FOOTPRINT OF THE STRUCTURE & COMPLETELY ENCOMPASS WITH GEOTEXTILE FABRIC.
5. A LEVELING COURSE OF STRUCTURAL FILL MAY BE PLACED AND COMPACTED OVER THE STABILIZATION LAYER IF DESIRED.

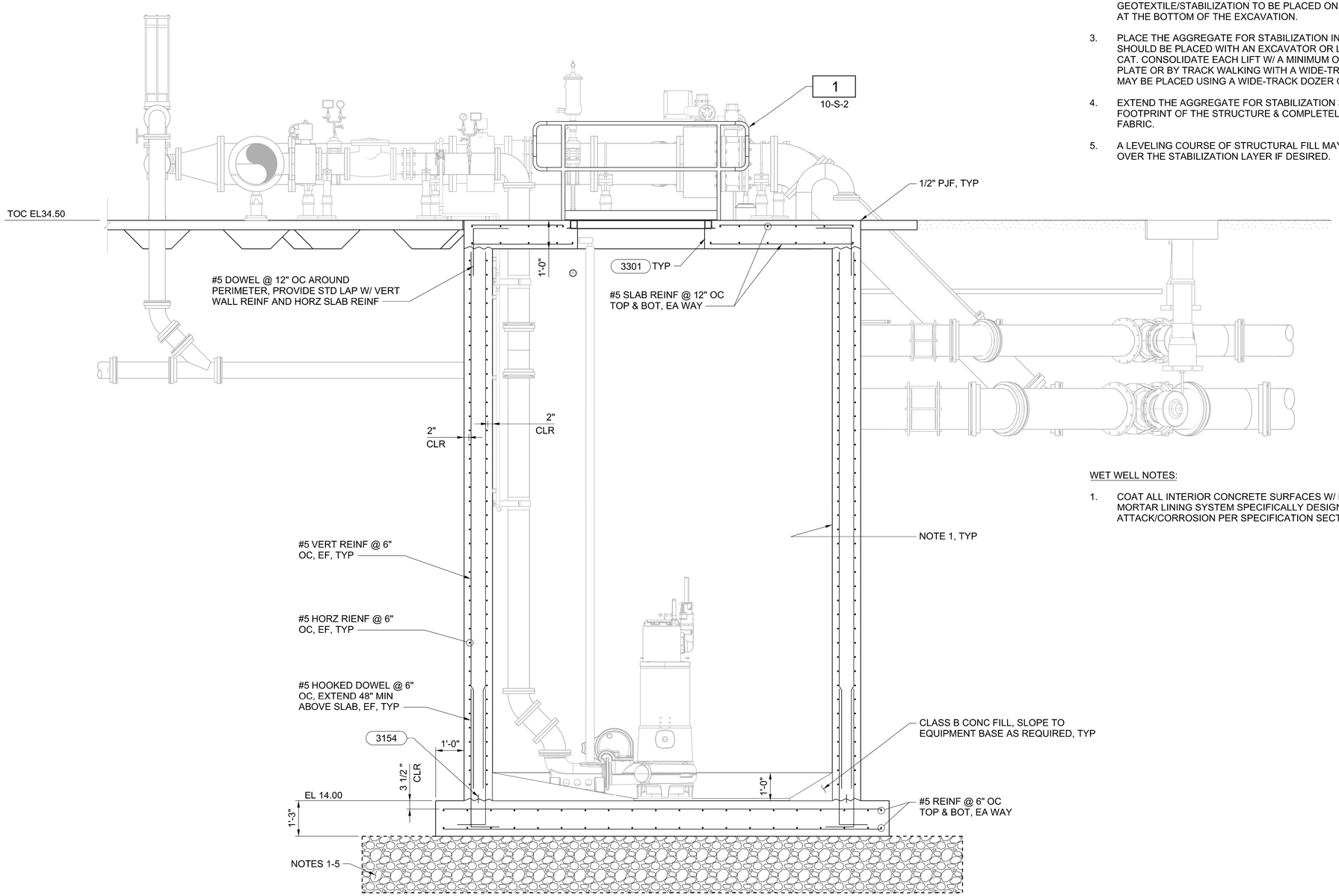

A SECTION
20-S-1
20-S-2
1/2" = 1'-0"

WET WELL NOTES:

1. COAT ALL INTERIOR CONCRETE SURFACES W/ MULTI-COMPONENT RESIN-BASED MORTAR LINING SYSTEM SPECIFICALLY DESIGNED TO PROTECT FROM CHEMICAL ATTACK/CORROSION PER SPECIFICATION SECTION 09875.

2 0 2 4 FEET
SCALE 1/2"=1'-0"

REGISTERED PROFESSIONAL ENGINEER ANDREW L. LINDEMAN No. C88058 CIVIL STATE OF CALIFORNIA
05-29-2020

DESIGNED A LINDEMAN
DRAWN J MARTIN
CHECKED J KELLOGG
APPROVED M FISHER

WATERWORKS ENGINEERS

CITY OF MORRO BAY
WATER RECLAMATION FACILITY
LIFT STATIONS AND OFFSITE PIPELINES

STRUCTURAL
PUMP STATION SECTION

DATE MAY 2020
PROJECT NUMBER 17-082
DRAWING NUMBER 20-S-3
SHEET NUMBER 171

FILENAME: 1782D-20S201.DGN PLOT DATE: 5/28/2020 12:52:19 PM

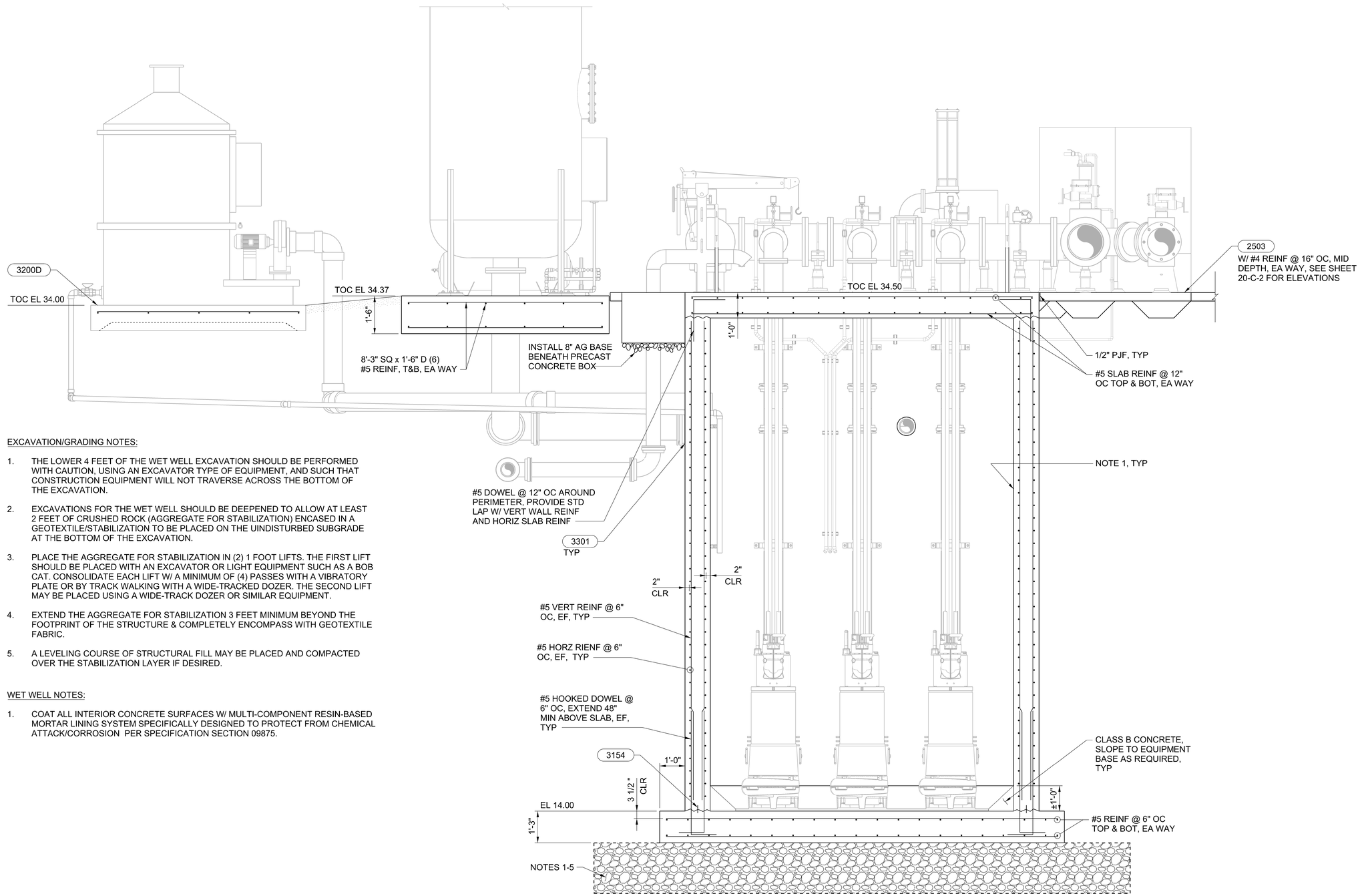

A SECTION
20-S-1
20-S-2
1/2" = 1'-0"

EXCAVATION/GRADING NOTES:

1. THE LOWER 4 FEET OF THE WET WELL EXCAVATION SHOULD BE PERFORMED WITH CAUTION, USING AN EXCAVATOR TYPE OF EQUIPMENT, AND SUCH THAT CONSTRUCTION EQUIPMENT WILL NOT TRAVERSE ACROSS THE BOTTOM OF THE EXCAVATION.
2. EXCAVATIONS FOR THE WET WELL SHOULD BE DEEPENED TO ALLOW AT LEAST 2 FEET OF CRUSHED ROCK (AGGREGATE FOR STABILIZATION) ENCASED IN A GEOTEXTILE/STABILIZATION TO BE PLACED ON THE UINDISTURBED SUBGRADE AT THE BOTTOM OF THE EXCAVATION.
3. PLACE THE AGGREGATE FOR STABILIZATION IN (2) 1 FOOT LIFTS. THE FIRST LIFT SHOULD BE PLACED WITH AN EXCAVATOR OR LIGHT EQUIPMENT SUCH AS A BOB CAT. CONSOLIDATE EACH LIFT W/ A MINIMUM OF (4) PASSES WITH A VIBRATORY PLATE OR BY TRACK WALKING WITH A WIDE-TRACKED DOZER. THE SECOND LIFT MAY BE PLACED USING A WIDE-TRACK DOZER OR SIMILAR EQUIPMENT.
4. EXTEND THE AGGREGATE FOR STABILIZATION 3 FEET MINIMUM BEYOND THE FOOTPRINT OF THE STRUCTURE & COMPLETELY ENCOMPASS WITH GEOTEXTILE FABRIC.
5. A LEVELING COURSE OF STRUCTURAL FILL MAY BE PLACED AND COMPACTED OVER THE STABILIZATION LAYER IF DESIRED.

WET WELL NOTES:

1. COAT ALL INTERIOR CONCRETE SURFACES W/ MULTI-COMPONENT RESIN-BASED MORTAR LINING SYSTEM SPECIFICALLY DESIGNED TO PROTECT FROM CHEMICAL ATTACK/CORROSION PER SPECIFICATION SECTION 09875.

2 0 2 4 FEET
SCALE 1/2"=1'-0"

REGISTERED PROFESSIONAL ENGINEER
ANDREW L. LINDEMAN
No. C88058
CIVIL
STATE OF CALIFORNIA
05-29-2020

DESIGNED A LINDEMAN
DRAWN J MARTIN
CHECKED J KELLOGG
APPROVED M FISHER

WATERWORKS ENGINEERS
2260 Douglas Blvd., Suite 105 • Roseville, CA 95661 • 916-780-2888

CITY OF MORRO BAY
WATER RECLAMATION FACILITY
LIFT STATIONS AND OFFSITE PIPELINES

MECHANICAL
PUMP STATION SECTION

DATE MAY 2020
PROJECT NUMBER 17-082
DRAWING NUMBER 20-S-4
SHEET NUMBER 172

FILENAME: 1782D-20S202.DGN PLOT DATE: 5/28/2020 12:57:41 PM

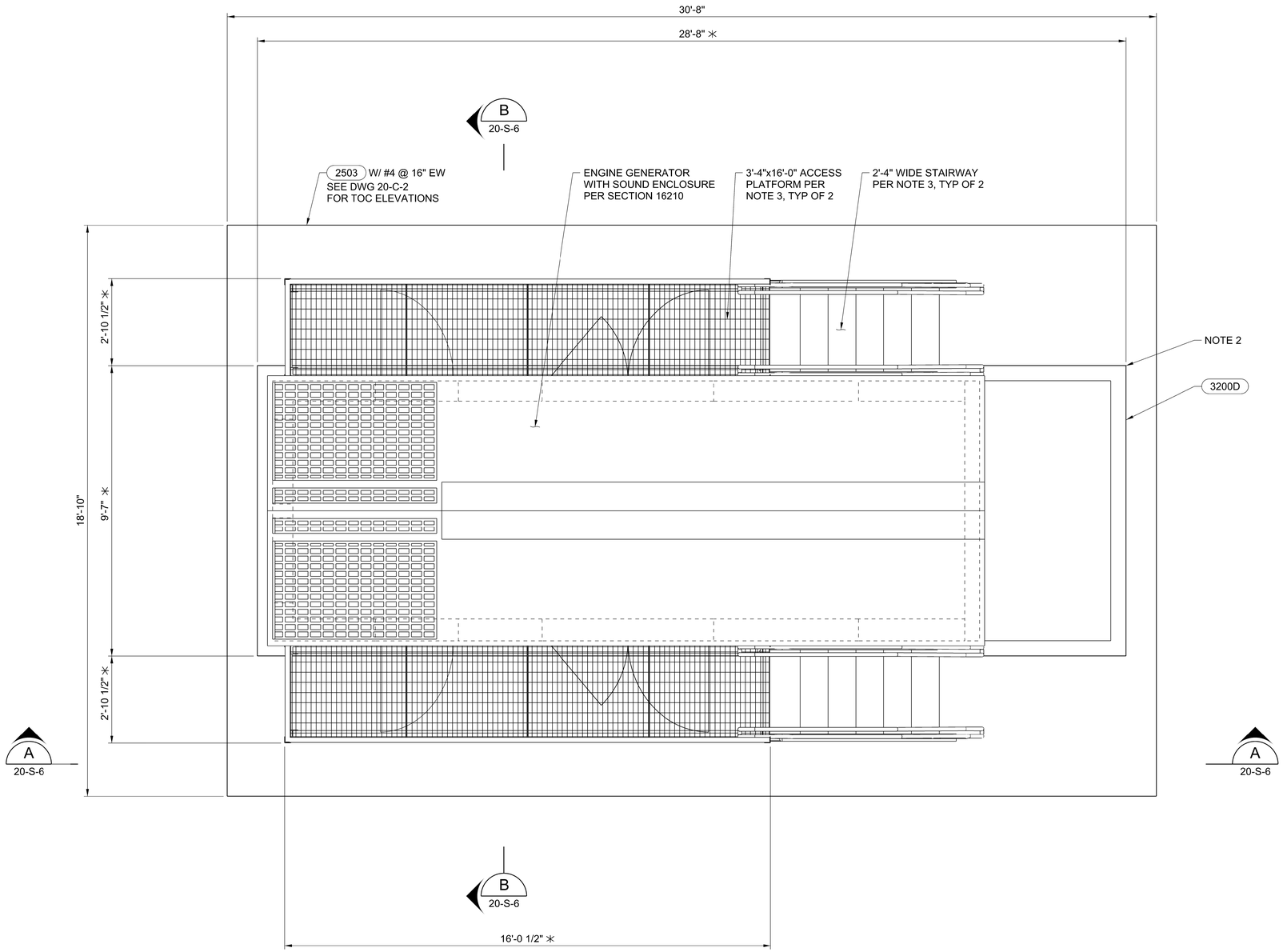

PLAN

1/2" = 1'-0"

NOTES:

1. GENERATOR SHOWN BASED ON KOHLER KD1000 SL2 GENERATOR WITH STATE CODE FUEL TANK. ACTUAL LAYOUT TO BE BASED ON APPROVED SUBMITTAL.
2. PROVIDE (2) #4 x 4'-0" DIAGONAL REINF @ 3" SPACING @ EA REENTRANT CORNER (4-TOTAL). PROVIDE STD 90° BEND WHERE SLAB EDGE PREVENTS PLACEMENT OF FULL LENGTH BAR.
3. WILDECK JIFFYSTAIR MODULAR STAIR SYSTEM, OR APPROVED EQUAL. PROVIDE CALOHSA COMPLIANT STAIR SYSTEM WITH GUARDRAIL ON TWO SIDES OF PLATFORM. COORDINATE ± 28" PLATFORM HEIGHT WITH APPROVED GENERATOR. HOT DIP GALVANIZED FINISH.

NOTES:

✳ = COORDINATE PLATFORM DIMENSIONS WITH APPROVED GENERATOR SUBMITTAL.

2 0 2 4 FEET

SCALE 1/2"=1'-0"

REGISTERED PROFESSIONAL ENGINEER
ANDREW L. LINDEMAN
No. C88058
CIVIL
STATE OF CALIFORNIA
05-29-2020

DESIGNED A LINDEMAN
DRAWN J MARTIN
CHECKED CHECKED-BY
APPROVED M FISHER

WATERWORKS ENGINEERS
2260 Douglas Blvd., Suite 105 • Roseville, CA 95661 • 916-780-2888

CITY OF MORRO BAY
WATER RECLAMATION FACILITY
LIFT STATIONS AND OFFSITE PIPELINES

STRUCTURAL
PUMP STATION B
GENERATOR PLAN

DATE MAY 2020
PROJECT NUMBER 17-082
DRAWING NUMBER 20-S-5
SHEET NUMBER 173

FILENAME: 1782D-20S102.DGN PLOT DATE: 5/28/2020 12:49:12 PM

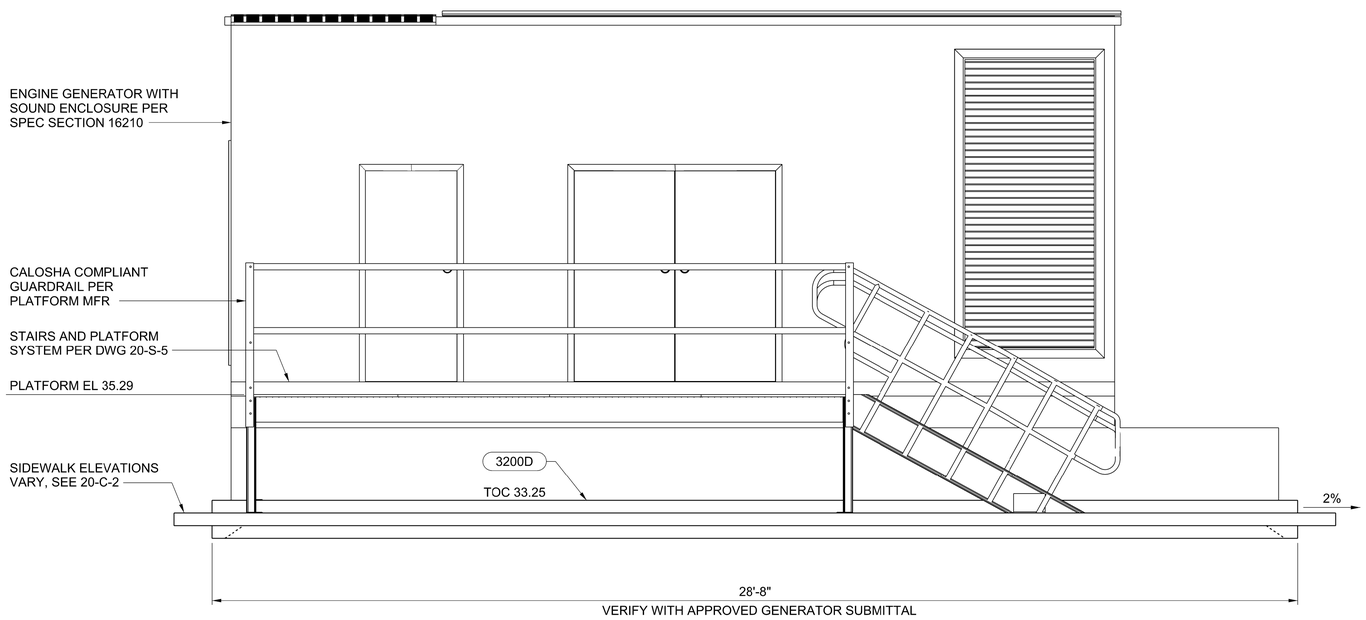

A SECTION
20-S-5 1/2" = 1'-0"

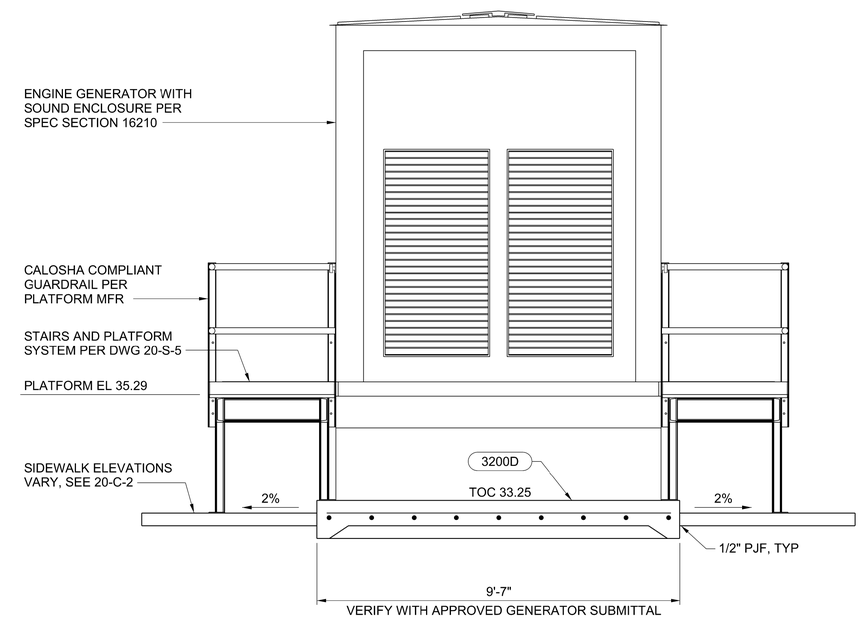

B SECTION
20-S-5 1/2" = 1'-0"

2 0 2 4 FEET
SCALE 1/2"=1'-0"

REGISTERED PROFESSIONAL ENGINEER
ANDREW L. LINDEMAN
No. C88058
CIVIL
STATE OF CALIFORNIA
05-29-2020

DESIGNED A LINDEMAN
DRAWN J MARTIN
CHECKED J KELLOGG
APPROVED M FISHER

WATERWORKS ENGINEERS
2260 Douglas Blvd., Suite 105 • Roseville, CA 95661 • 916-780-2888

CITY OF MORRO BAY
WATER RECLAMATION FACILITY
LIFT STATIONS AND OFFSITE PIPELINES

STRUCTURAL
PUMP STATION B
GENERATOR SECTIONS

DATE MAY 2020
PROJECT NUMBER 17-082
DRAWING NUMBER 20-S-6
SHEET NUMBER 174

FILENAME: 1782D-20S203.DGN PLOT DATE: 5/28/2020 1:00:44 PM

NOTES:

1. PUMP STATION DESIGN IS BASED ON FLYGT PUMPS LISTED IN SPECIFICATION SECTION 11300.

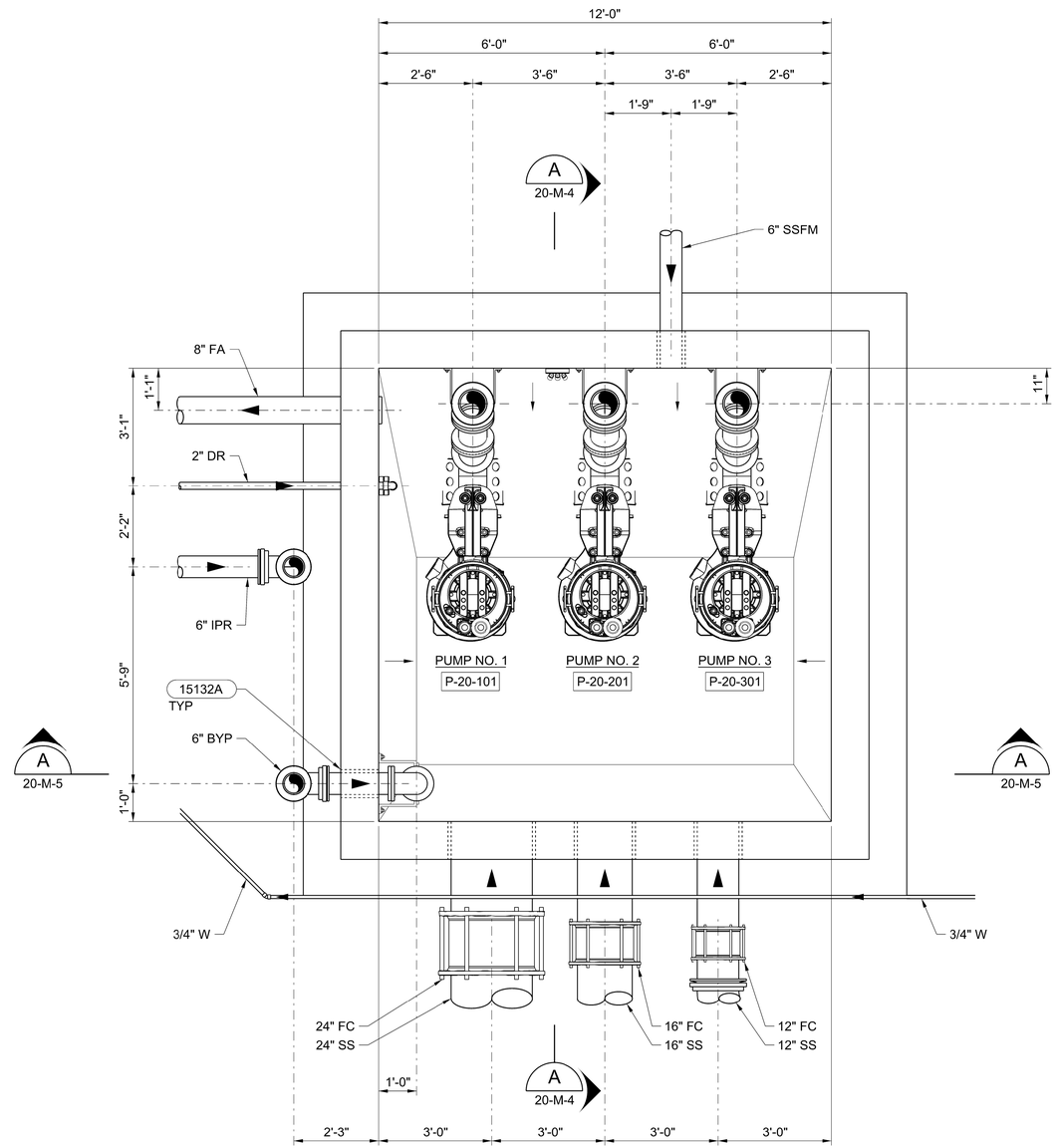

LOWER PLAN

1/2" = 1'-0"

2 0 2 4 FEET

SCALE 1/2"=1'-0"

REGISTERED PROFESSIONAL ENGINEER
KRISTINA P. ALACON
No. C70952
CIVIL
STATE OF CALIFORNIA
05-29-2020

DESIGNED K ALACON
DRAWN J MARTIN
CHECKED K ALACON
APPROVED M FISHER

WATERWORKS ENGINEERS
2260 Douglas Blvd., Suite 105 • Roseville, CA 95661 • 916-780-2888

CITY OF MORRO BAY
WATER RECLAMATION FACILITY
LIFT STATIONS AND OFFSITE PIPELINES

MECHANICAL
PUMP STATION B
LOWER PLAN

DATE MAY 2020
PROJECT NUMBER 17-082
DRAWING NUMBER 20-M-1
SHEET NUMBER 175

FILENAME: 1782D-20M100.DGN PLOT DATE: 5/28/2020 1:10:26 PM

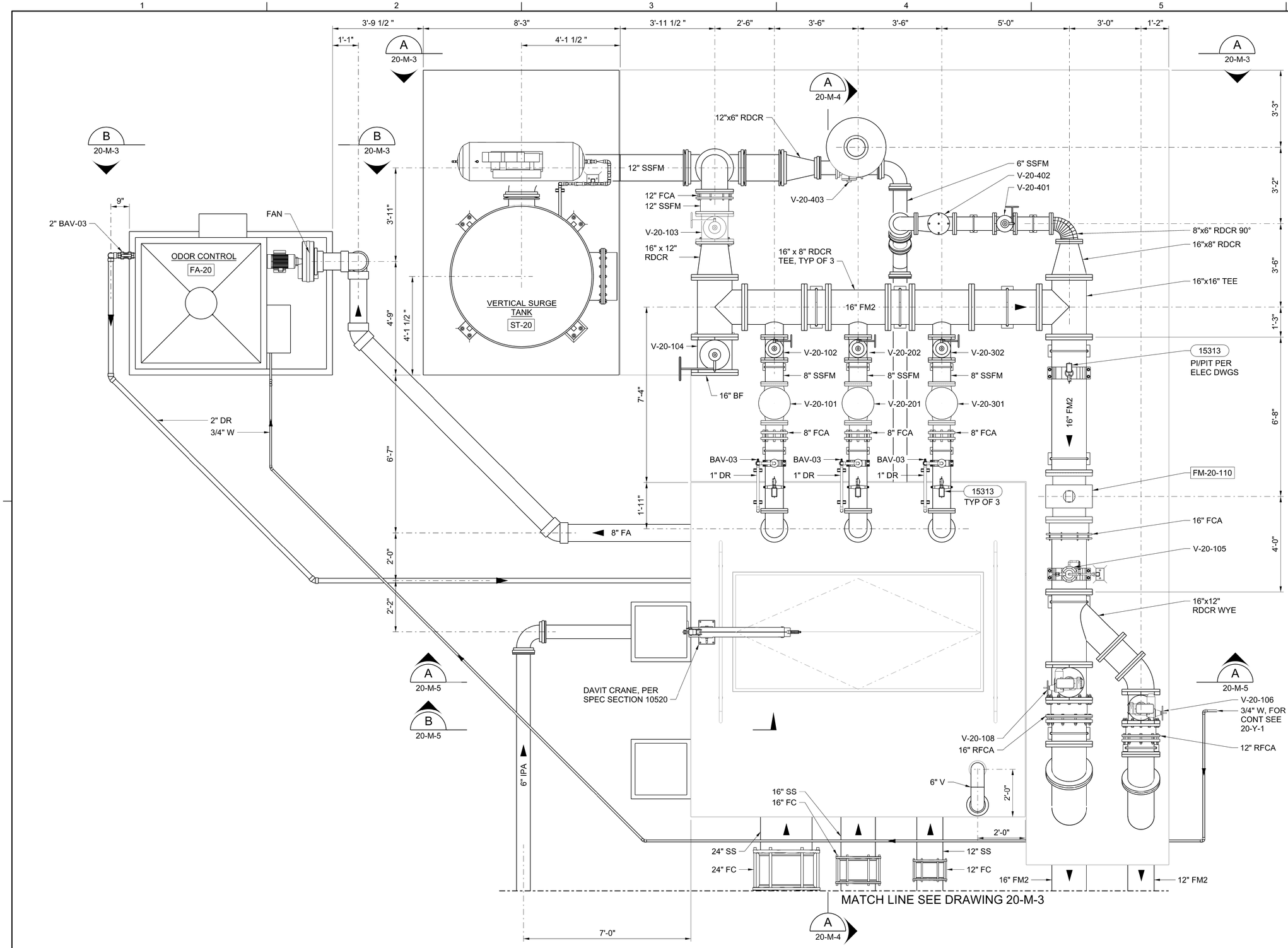

TOP PLAN

1/2" = 1'-0"

DESIGNED K ALACON
DRAWN J MARTIN
CHECKED K ALACON
APPROVED M FISHER

WATERWORKS ENGINEERS
2260 Douglas Blvd., Suite 105 • Roseville, CA 95661 • 916-780-2888

CITY OF MORRO BAY
WATER RECLAMATION FACILITY
LIFT STATIONS AND OFFSITE
PIPELINES

MECHANICAL
PUMP STATION B
TOP PLAN

REGISTERED PROFESSIONAL ENGINEER
KRISTINA P. ALACON
No. C70952
CIVIL
STATE OF CALIFORNIA
05-29-2020

DATE
MAY 2020
PROJECT NUMBER
17-082
DRAWING NUMBER
20-M-2
SHEET NUMBER 176

FILENAME: 1782D-20M101.DGN PLOT DATE: 5/28/2020 1:21:14 PM

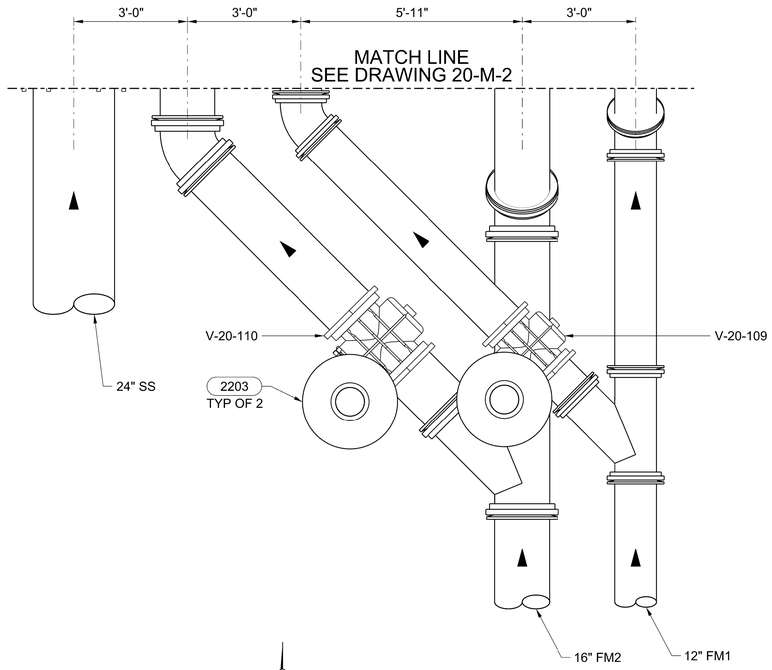

PLAN
1/2" = 1'-0"

NOTES:

1. CONTRACTOR TO VERIFY ALL TANK, SUPPORT, ANCHOR AND FOUNDATION DIMENSIONS WITH TANK MANUFACTURER PRIOR TO CONSTRUCTION.
2. PROVIDE PROBE ASSEMBLY SUPPORT PER TANK MANUFACTURER.

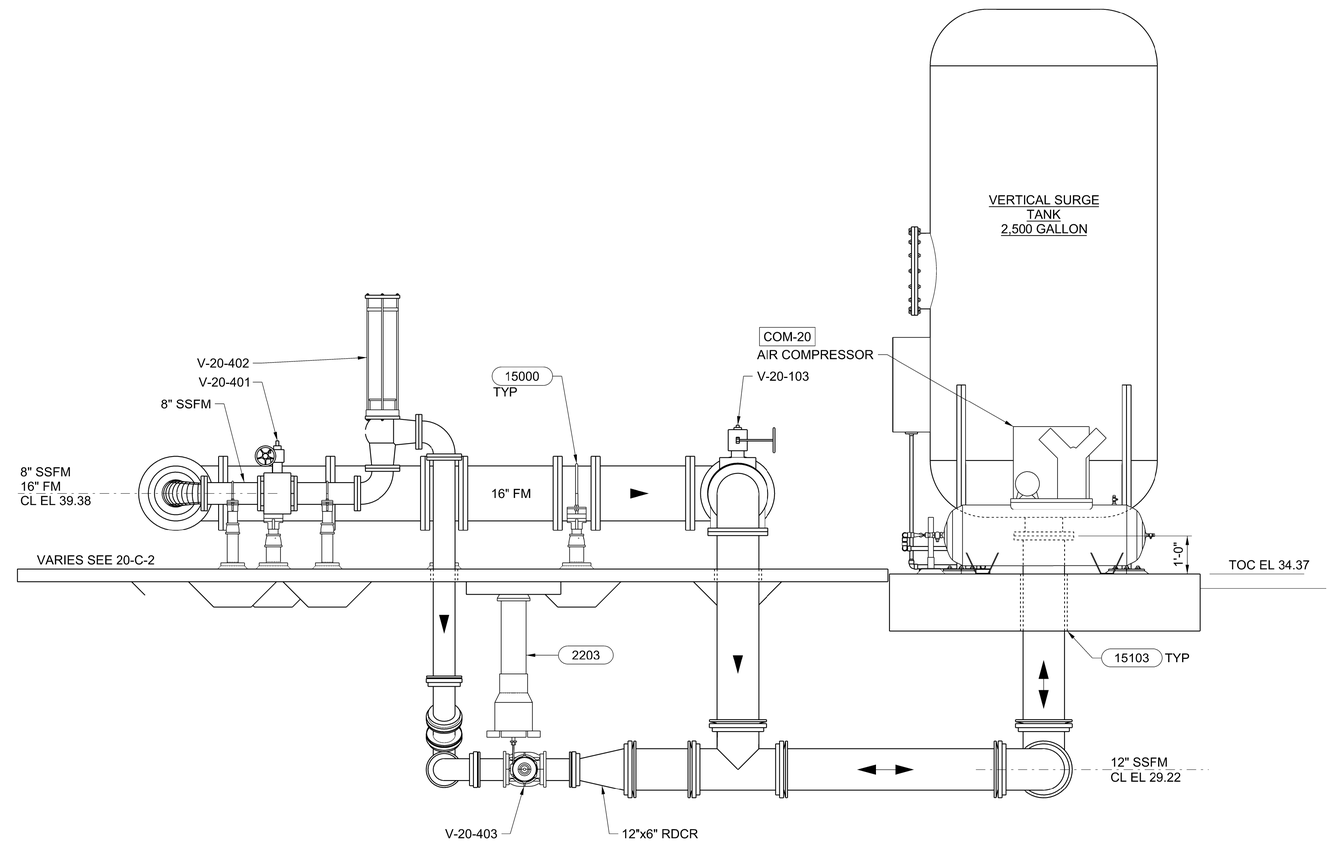

A SECTION
20-M-2 1/2" = 1'-0"

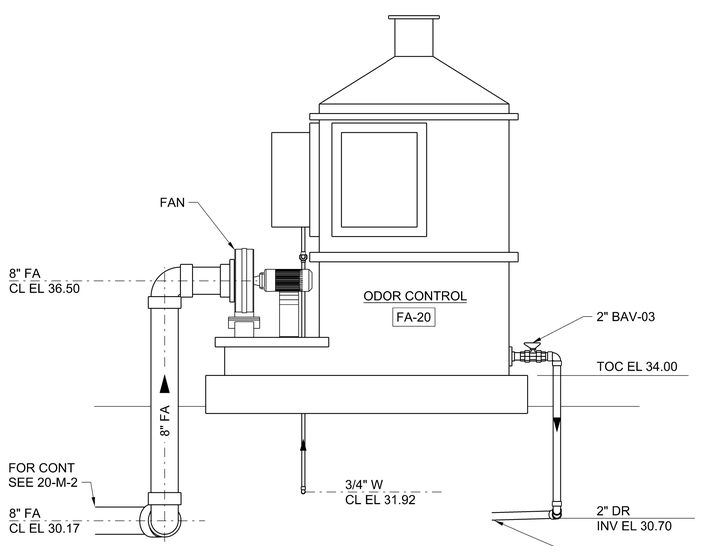

B SECTION
20-M-2 1/2" = 1'-0"

2 0 2 4 FEET
SCALE 1/2"=1'-0"

REGISTERED PROFESSIONAL ENGINEER
KRISTINA P. ALBANI
No. C70952
CIVIL
STATE OF CALIFORNIA
05-29-2020

DESIGNED K ALACON
DRAWN J MARTIN
CHECKED K ALACON
APPROVED M FISHER

WATERWORKS ENGINEERS
2260 Douglas Blvd., Suite 105 • Roseville, CA 95661 • 916-780-2888

CITY OF MORRO BAY
WATER RECLAMATION FACILITY
LIFT STATIONS AND OFFSITE PIPELINES

MECHANICAL
PUMP STATION B
PARTIAL PLAN AND SECTIONS

DATE MAY 2020
PROJECT NUMBER 17-082
DRAWING NUMBER 20-M-3
SHEET NUMBER 177

FILENAME: 1782D-20M102.DGN PLOT DATE: 5/28/2020 1:39:22 PM

NOTES:

1. FLOOR SLEEVE SHALL BE SCH 80 PVC.

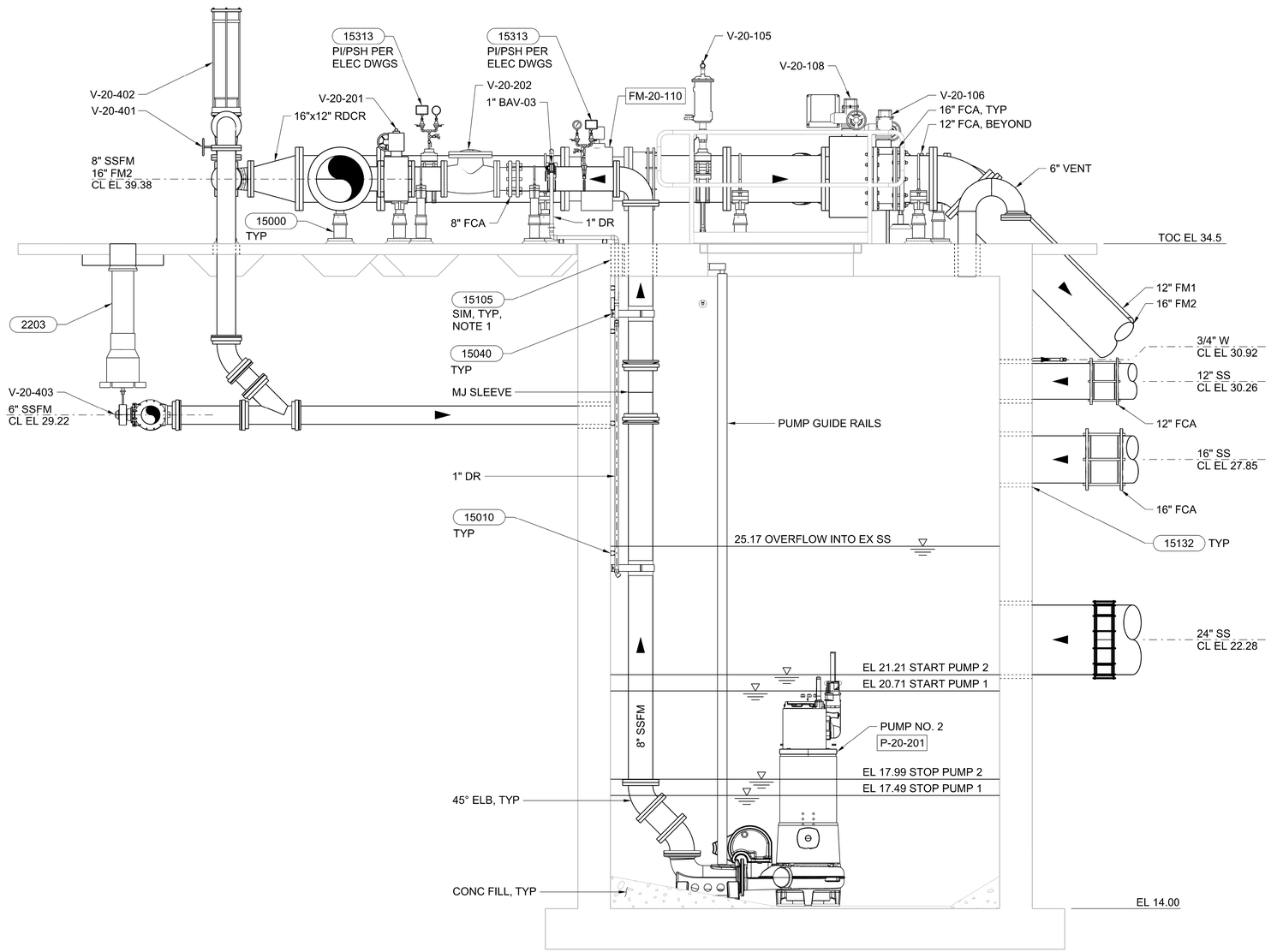

A SECTION
20-M-1
20-M-2
1/2" = 1'-0"

2 0 2 4 FEET
SCALE 1/2"=1'-0"

REGISTERED PROFESSIONAL ENGINEER
ARMINA P. ALIAN
No. C70952
CIVIL
STATE OF CALIFORNIA
05-29-2020

DESIGNED K ALACON
DRAWN J MARTIN
CHECKED K ALACON
APPROVED M FISHER

WATERWORKS ENGINEERS
2260 Douglas Blvd., Suite 105 • Roseville, CA 95661 • 916-780-2888

CITY OF MORRO BAY
WATER RECLAMATION FACILITY
LIFT STATIONS AND OFFSITE PIPELINES

MECHANICAL
PUMP STATION B SECTION

DATE MAY 2020
PROJECT NUMBER 17-082
DRAWING NUMBER 20-M-4
SHEET NUMBER 178

FILENAME: 1782D-20M201.DGN PLOT DATE: 5/28/2020 1:59:58 PM

NOTES:

1. BY PUMP MFR.

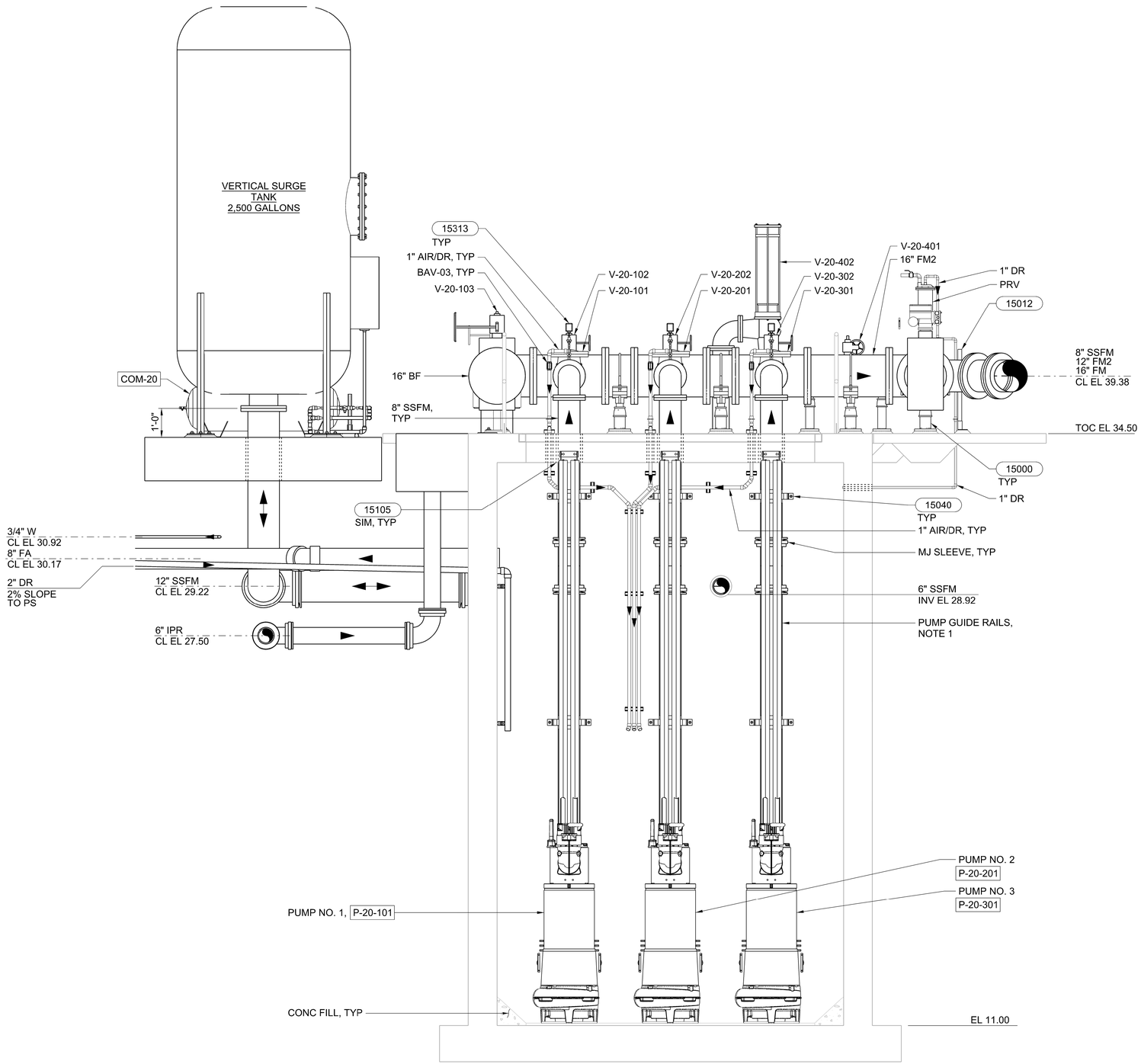

A SECTION
20-M-1
20-M-2
1/2" = 1'-0"

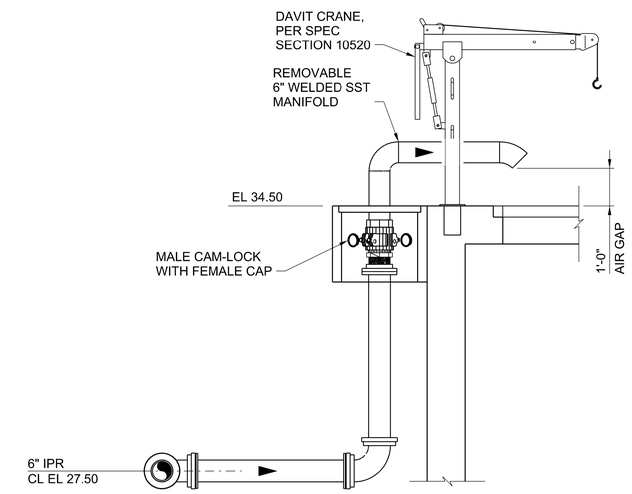

B SECTION
20-M-2
1/2" = 1'-0"

2 0 2 4 FEET
SCALE 1/2"=1'-0"

REGISTERED PROFESSIONAL ENGINEER
ARGENTINA P. ALCACON
No. C70952
CIVIL
STATE OF CALIFORNIA

DESIGNED K ALACON
DRAWN J MARTIN
CHECKED K ALACON
APPROVED M FISHER

WATERWORKS ENGINEERS

CITY OF MORRO BAY
WATER RECLAMATION FACILITY
LIFT STATIONS AND OFFSITE PIPELINES

MECHANICAL
PUMP STATION B SECTIONS

DATE MAY 2020
PROJECT NUMBER 17-082
DRAWING NUMBER 20-M-5
SHEET NUMBER 179

FILENAME: 1782D-20M202.DGN PLOT DATE: 6/16/2020 8:18:18 AM

HVAC LEGEND

SYMBOL	DESCRIPTION
AC 1	EQUIPMENT LABEL
CS1 / 100 / 12x12 — LABEL / CFM / SIZE	AIR INLET/OUTLET LABEL
T	THERMOSTAT (TOP OF BOX AT MAX. 48" AFF)
	POINT OF CONNECTION
C	CARBON DIOXIDE WALL SENSOR (TOP OF BOX AT MAX. 48" AFF)
S	REMOTE TEMPERATURE SENSOR
$	MANUAL WALL SWITCH
ROUND / SUPPLY / RETURN / EXHAUST	CEILING DIFFUSER/GRILLE
	WALL REGISTER/GRILLE
	DUCT UP (SECTION)
	DUCT DOWN (SECTION)
	DUCT BEYOND (SECTION)
DOUBLE-LINE / SINGLE-LINE	
WxH	RECTANGULAR DUCT (DIMENSIONS = WIDTH (VISIBLE SIDE) x HEIGHT)
Ø	ROUND DUCT (DIMENSION = DIAMETER)
12x12L	DUCT WITH INTERNAL INSULATION LINER (DIMENSIONS = NET FREE OPEN AREA)
	EXPOSED SPIRAL SEAM ROUND DUCT
	MANUAL VOLUME DAMPER
WxH WxH	DUCT TRANSITION
WxH Ø	RECTANGULAR TO ROUND DUCT TRANSITION
	DUCT CAP
	CUT AND REMOVE DUCT
	FLEX DUCT LINETYPE
	SUPPLY DUCT LINETYPE
	RETURN DUCT LINETYPE
	EXHAUST DUCT LINETYPE
SD	DUCT SMOKE DETECTOR
FD	FIRE DAMPER
FSD	FIRE-SMOKE DAMPER
	45° REDUCING STRAIGHT LATERAL
	45° REDUCING WYE BRANCH
	45° REDUCING LATERAL CROSS
WxH WxH	CONICAL BELLMOUTH TAP
WxH WxH WxH	45° ENTRY TAP
WxH WxH WxH	RECTANGULAR DUCT TEE WITH TURN VANES (SIZE EACH TAKOFF FOR EQUAL PRESSURE LOSS)
WxH	RECTANGULAR DUCT ELBOW WITH TURN VANES
W R = 1.5W WxH	RECTANGULAR DUCT ELBOW
R = 1.5Ø Ø	ROUND DUCT ELBOW

VARIABLE REFRIGERANT FLOW (VRF) SYSTEM SCHEDULE

OUTDOOR UNIT LABEL	OUTDOOR UNIT MAKE & MODEL	TYPE	NOM. TONS	CONN. INDOOR UNIT LOAD	EFFICIENCY EER	EFFICIENCY SEER	EFFICIENCY HSPF	ELECTRICAL VOLTS/PH/HZ	ELECTRICAL FLA	ELECTRICAL MCA	ELECTRICAL MOCP	OPER. WT. (LBS.)
ODU 1	SAMSUNG AM036NXMDCH/AA	HEAT RECOVERY	3	120%	12.5	22.0	10.0	208 / 1 / 60	18.5	23	40	214
ODU 2	SAMSUNG AM060MXMDCH/AA	HEAT PUMP	5	106%	11.2	20.6	11.5	208 / 1 / 60	25.7	32	50	276
ODU 3	SAMSUNG AM060MXMDCH/AA	HEAT PUMP	5	106%	11.2	20.6	11.5	208 / 1 / 60	25.7	32	50	276

REFRIGERANT DISTRIBUTION UNIT LABEL	MAKE & MODEL	PORTS	ELECTRICAL VOLTS/PH/HZ	ELECTRICAL FLA	ELECTRICAL MCA	ELECTRICAL MOCP	OPER. WT. (LBS.)
RDU 1	SAMSUNG MCU-R4NEK0N	4	208 / 1 / 60	1.6	2.0	15	47
NOT APPLICABLE							
NOT APPLICABLE							

INDOOR UNIT LABEL	MAKE & MODEL	TYPE	NOM. TONS	SENS. COOL MBH*	HEAT MBH**	SUPPLY FAN CFM	SUPPLY FAN ESP	ELECTRICAL VOLTS/PH/HZ	ELECTRICAL FLA	ELECTRICAL MCA	ELECTRICAL MOCP	OPER. WT. (LBS.)	OPTIONS
IDU 1A	SAMSUNG AM009MNVDCH/AA	WALL MOUNT	0.75	6.5	10.5	200	0.0"	208 / 1 / 60	0.19	--	--	18	1, 2
IDU 1B	SAMSUNG AM036JNCDCH/AA	CEILING MOUNT	3	25.4	40.9	1035	0.0"	208 / 1 / 60	0.94	--	--	74	1, 2, 4
IDU 2A	SAMSUNG AM032MNQDCH/AA	WALL MOUNT	2.67	21.5	33.6	810	0.0"	208 / 1 / 60	0.54	--	--	41	1, 2, 3, 4
IDU 2B	SAMSUNG AM032MNQDCH/AA	WALL MOUNT	2.67	21.5	33.6	810	0.0"	208 / 1 / 60	0.54	--	--	41	1, 2, 3, 4
IDU 3A	SAMSUNG AM032MNQDCH/AA	WALL MOUNT	2.67	21.5	33.6	810	0.0"	208 / 1 / 60	0.54	--	--	41	1, 2, 3, 4
IDU 3B	SAMSUNG AM032MNQDCH/AA	WALL MOUNT	2.67	21.5	33.6	810	0.0"	208 / 1 / 60	0.54	--	--	41	1, 2, 3, 4

NOTES:

* COOLI NG CAPACITY BASED ON 82°F OAT, 66°F EWB, & 80°F EDB.
** HEATING CAPACITY BASED ON 35°F OAT & 70°F EDB.

OPTIONS:

1. SAMSUNG #MWR-WG00JN WIRED REMOTE CONTROLLER
2. SAMSUNG REFRIGERANT ISOLATION VALVES FOR EACH ZONE
3. ASPEN MINI ORANGE UNIVOLT CONDENSATE PUMP (16 WATTS POWERED BY INDOOR UNIT)
4. RECTORSEAL SLIMLINE LINESET DUCT AS REQUIRED

HVAC PIPING LEGEND

ABBREV.	DESCRIPTION	SYMBOL
CD	CONDENSATE DRAIN PIPE	CD
CDO	CONDENSATE DRAIN OVERFLOW PIPE	CDO
CO	CLEANOUT, PLUG CLEANOUT	
SOV	SHUT-OFF VALVE	
(UF), (UG), (US)	UNDER FLOOR, GROUND, SLAB	

HVAC ABBREVIATIONS

(ABC)	ABOVE CEILING	MCA	MINIMUM CURRENT AMPACIITY
AD	ACCESS DOOR	MFR	MANUFACTURER
AFF, AFG	ABOVE FINISHED FLOOR, GRADE	MOCP	MAX. OVERCURRENT PROTECTION
AFUE	ANNUAL FUEL UTILIZATION EFFICIENCY	(NI)	NEW
APD	AIR PRESSURE DROP	NPSH	NET POSITIVE SUCTION HEAD
ARCH.	ARCHITECT, ARCHITECTURAL	OA	OUTSIDE AIR
BFF, BFG	BELOW FINISHED FLOOR, GRADE	OAD	OUTSIDE AIR DAMPER
BHP	BRAKE HORSEPOWER	O.C.	ON CENTER
BLKG	BLOCKING	(OH)	OVERHEAD
BMS	BUILDING MANAGEMENT SYSTEM	POC	POINT OF CONNECTION
BTUHR	BRITISH THERMAL UNITS	P.C.	PLUMBING CONTRACTOR
CAV	CONSTANT AIR VOLUME	PH	PHASE
CFM	CUBIC FEET PER MINUTE	PSI	POUNDS PER SQUARE INCH
COMB.	COMBUSTION	P.T.	PRESURE-TREATED
CONN.	CONNECT, CONNECTION	RA	RETURN AIR
CONT.	CONTINUATION, CONTINUOUS	RL	REFRIGERANT LIQUID LINE
COP	COEFFICIENT OF PERFORMANCE	RPM	ROTATIONS PER MINUTE
DB	DRY BULB	RS	REFRIGERANT SUCTION LINE
DCV	DEMAND CONTROL VENTILATION	SA	SUPPLY AIR
DIA., Ø	DIAMETER	SEER	SEASONAL ENERGY EFFICIENCY RATIO
DDC	DIRECT DIGITAL CONTROLS	SMS	SHEET METAL SCREW
DN	DOWN	SOV	SHUTOFF VALVE
(E)	EXISTING	S.P.	STATIC PRESSURE
EA	EXHAUST AIR	S.S.	STAINLESS STEEL
EAT	ENTERING AIR TEMPERATURE	STL	STEEL
E.C.	ELECTRICAL CONTRACTOR	(TA), (TB)	TO ABOVE, TO BELOW
EER	ENERGY EFFICIENCY RATIO	TCP	TEMPERATURE CONTROL PANEL
ESP	EXTERNAL STATIC PRESSURE	TCC	TEMPERATURE CONTROLS CONTRACTOR
EWT	ENTERING WATER TEMPERATURE	TDH	TOTAL DYNAMIC HEAD
(FA), (FB)	FROM ABOVE, FROM BELOW	TSP	TOTAL STATIC PRESSURE
F.A.C.	FIRE ALARM CONTRACTOR	TSTAT	THERMOSTAT
FLA	FULL LOAD AMPS	(TYP), TYP.	TYPICAL
FPM	FEET PER MINUTE	(UF), (US)	UNDER FLOOR, UNDER SLAB
GA.	GAUGE	(UG)	UNDERGROUND
GALV.	GALVANIZED	U.N.O	UNLESS NOTED OTHERWISE
G.C.	GENERAL CONTRACTOR	V	VOLTAGE
GPM	GALLONS PER MINUTE	VAV	VARIABLE AIR VOLUME
HP	HORSEPOWER	VD	VOLUME DAMPER
HSPF	HEATING SEASONAL PERFORMANCE FACTOR	VFD	VARIABLE FREQUENCY DRIVE
HZ	HERTZ	VB	VALVE BOX
LAT	LEAVING AIR TEMPERATURE	VRF	VARIABLE REFRIGERANT FLOW
LWT	LEAVING WATER TEMPERATURE	WB	WET BULB
MBH	THOUSAND BTUIHR	W.C. , W.G.	WATER COLUMN, WATER GAUGE
M.C.	MECHANICAL CONTRACTOR	WPD	WATER PRESSURE DROP

EXHAUST FAN SCHEDULE

LABEL	MAKE & MODEL	TYPE	CFM	ESP	SONES	FAN HP	FAN MOTOR	ELECTRICAL VOLTS/PH/HZ	ELECTRICAL AMPS	ELECTRICAL WATTS	ELECTRICAL BHP	OPER. WEIGHT (LBS.)	CONTROL	OPTIONS
EF 1	PANASONIC FV-1115VK2	CEILING	130	0.1"	< 0.3	--	DC ECM	120 / 1 / 60	0.24	9.2	--	12	SWITCHED W/ LIGHTS	1, 2, 3

OPTIONS:

1. HOODED ROOF EXHAUST OUTLET.
2. BACKDRAFT DAMPER.
3. VENTILATION RATE SELECTOR.

PIPE MATERIAL SCHEDULE

TYPE	INSIDE	OUTSIDE	INSULATION	REMARKS
REFRIGERANT LIQUID & SUCTION	ACR COPPER USE ANNEALED SOFT COPPER UP TO 5/8". USE HARD DRAWN COPPER FOR 3/4" AND LARGER.	ACR COPPER USE ANNEALED SOFT COPPER UP TO 5/8". USE HARD DRAWN COPPER FOR 3/4" AND LARGER.	PER HVAC UNIT MANUFACTURER'S INSTRUCTIONS	PROVIDE WEATHER PROTECTIVE ALUMINUM JACKETING OR GALV. SHEETMETAL ENCLOSURE OVER ALL INSULATION LOCATED OUTSIDE.
CONDENSATE DRAIN	TYPE-M COPPER	TYPE-M COPPER	--	--

DUCT MATERIAL SCHEDULE

TYPE	MATERIAL	INSULATION	REMARKS
EXHAUST AIR	GALV. SHEETMETAL GA. PER SMACNA STANDARDS	NONE	USE 5 FT MIN. UL CLASS 1 FLEX DUCT FOR TERMINAL CONNECTIONS. LIMIT ALL FLEX DUCT LENGTHS TO 5 FT MAX.

CONTRACTOR VRF TRAINING

PRIOR TO BEGINNING ANY WORK, MECHANICAL CONTRACTOR SHALL COMPLETE THE VRF SYSTEM MANUFACTURER'S FACTORY TRAINING/CERTIFICATION PROGRAM FOR THE INSTALLATION, COMMISSIONING, AND CONFIGURATION OF SPECIFIED AND/OR INSTALLED VRF SYSTEM.

REGISTERED PROFESSIONAL ENGINEER
SCOTT TURNBULL
No. M33897
Exp. 12/31/21
MECHANICAL
STATE OF CALIFORNIA

DESIGN S. TURNBULL
DRAWN S. TURNBULL
CHECKED K. ALACON
APPROVED J. RIESS

M/E SYSTEMS ENGINEERING
MECHANICAL & ENERGY ENGINEERING
9063 Foothills Blvd, Ste 3
Roseville, CA 95747
(916) 774-6330

WATERWORKS ENGINEERS
2260 Douglas Blvd, Suite 105 •Roseville, CA 95661 • 916-780-2888

CITY OF MORRO BAY
WATER RECLAMATION FACILITY
LIFT STATION AND OFFSITE PIPELINES

HVAC
PUMP STATION A AND B
HVAC SCHEDULES AND LEGEND

DATE MAY 2020
PROJECT NUMBER 17-082
DRAWING NUMBER M-1
SHEET NUMBER 180

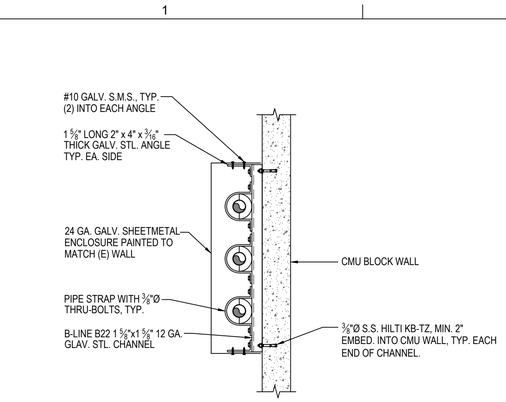

4 PIPE ENCLOSURE
SCALE: NONE

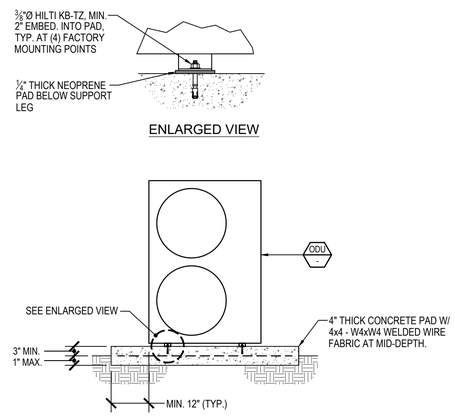

3 VRF OUTDOOR UNIT
SCALE: NONE

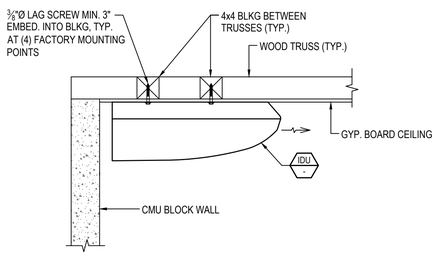

6 CEILING-MOUNT VRF INDOOR UNIT
SCALE: NONE

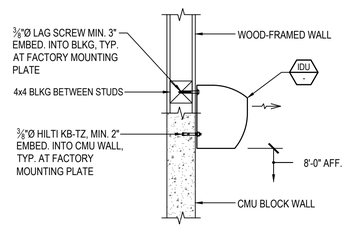

5 WALL-MOUNT VRF INDOOR UNIT
SCALE: NONE

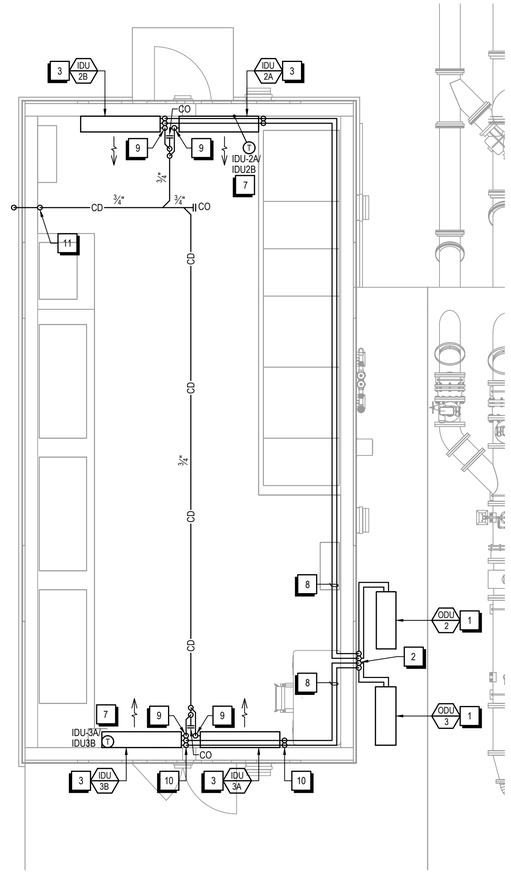

2 PUMP STATION PS-B - ELECTRICAL BUILDING HVAC PLAN
SCALE: 1/4" = 1'-0"

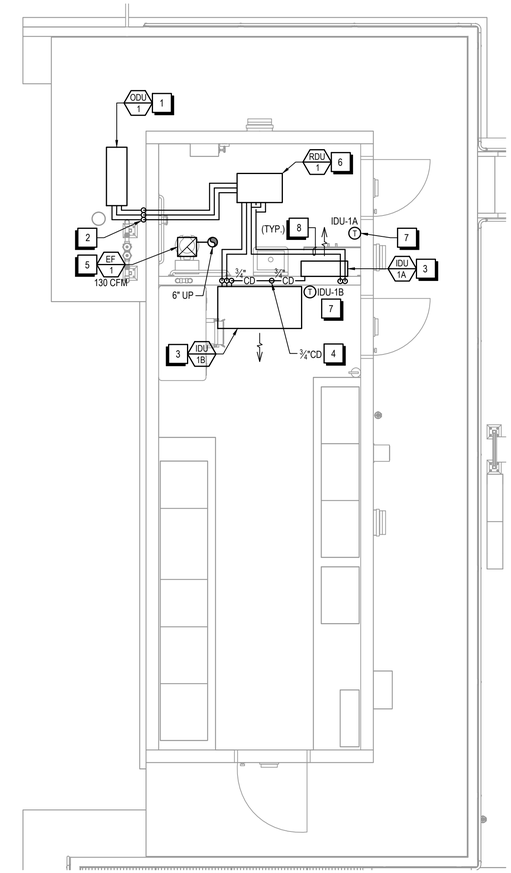

1 PUMP STATION PS-A - ELECTRICAL BUILDING HVAC PLAN
SCALE: 1/4" = 1'-0"

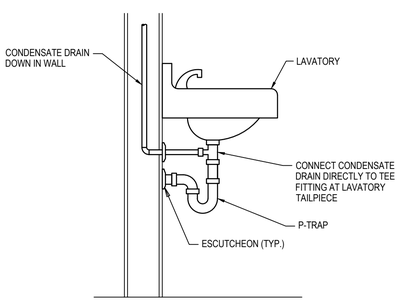

7 CD TO LAVATORY TAILPEICE
SCALE: NONE

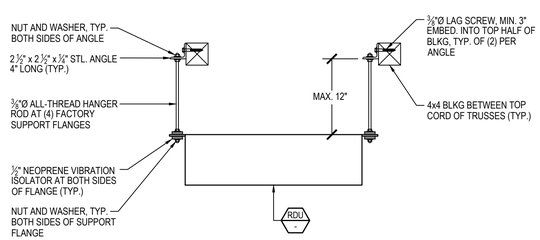

8 REFRIGERANT DISTRIBUTION UNIT
SCALE: NONE

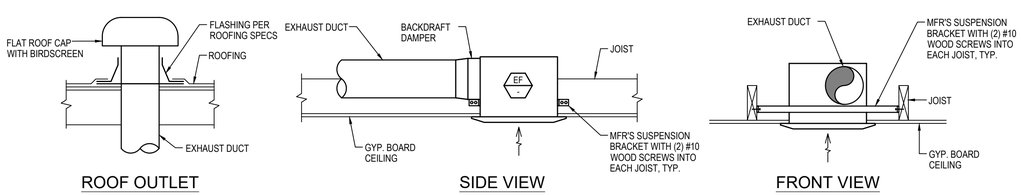

9 CEILING EXHAUST FAN
SCALE: NONE

KEYNOTES:

1. PROVIDE (N) VRF OUTDOOR UNIT ON (N) CONCRETE PAD. SEE 3/M-2
2. ROUTE (N) REFRIGERANT LINES UP EXTERIOR WALL IN SHEET METAL ENCLOSURE TO (N) REFRIGERANT DISTRIBUTION UNIT IN ATTIC. SIZE REFRIGERANT LINES PER MANUFACTURER'S INSTRUCTIONS. SEE 4/M-2
3. PROVIDE (N) VRF INDOOR UNIT AT HIGH SIDEWALL. SEE 5/M-2
4. PROVIDE (N) VRF INDOOR UNIT AT CEILING. SEE 6/M-2
5. PROVIDE (N) CEILING EXHAUST FAN. SEE 9/M-2
6. PROVIDE (N) SUSPENDED VRF REFRIGERANT DISTRIBUTION UNIT IN ATTIC. SEE 8/M-2
7. PROVIDE INSULATED BACKING FOR (N) INDOOR UNIT CONTROLLER LOCATED AT EXTERIOR WALL.
8. ROUTE (N) REFRIGERANT LINES IN ATTIC TO (N) INDOOR UNIT. SIZE PER MANUFACTURER INSTRUCTIONS.
9. PROVIDE (N) CONDENSATE AND PUMPED CD UP IN LINESET DUCT TO GRAVITY CD IN ATTIC.
10. ROUTE (N) EXPOSED REFRIGERANT LINES IN LINESET DUCT UP TO ATTIC.
11. ROUTE (N) CD DOWN FROM ATTIC TO DAYLIGHT 6" ABOVE LANDSCAPED AREA.
12. ROUTE (N) CONDENSATE DRAIN DOWN TO LAVATORY TAILPIECE. SEE 7/M-2

REGISTERED PROFESSIONAL ENGINEER SCOTT TURNBULL No. M33897 Exp. 12/31/21 MECHANICAL STATE OF CALIFORNIA

DESIGN S. TURNBULL
DRAWN S. TURNBULL
CHECKED K. ALACON
APPROVED J. RIESS

ME SYSTEMS ENGINEERING
MECHANICAL & ENERGY ENGINEERING
9063 Foothills Blvd, Ste 3
Roseville, CA 95747
(916) 774-6330

WATERWORKS ENGINEERS
2260 Douglas Blvd, Suite 105 • Roseville, CA 95661 • 916-780-2888

CITY OF MORRO BAY
WATER RECLAMATION FACILITY
LIFT STATION AND OFFSITE PIPELINES

HVAC
PUMP STATION A AND B
HVAC PLANS AND DETAILS

DATE MAY 2020
PROJECT NUMBER 17-082
DRAWING NUMBER M-2
SHEET NUMBER 181

COMPONENTS

SYMBOL	DESCRIPTION
RES	RESISTOR
SV	SOLENOID COIL
HTR	HEATER
	CAPACITOR
	DIODE
	DIODE, ZENER
MOV	METAL OXIDE VARISTOR
	AUDIBLE ALARM
?	3 PHASE MOTOR ? = MOTOR HP
M	3 PHASE MOTOR
M	SINGLE PHASE MOTOR
	TRANSFORMER SIZE AND VOLTAGE AS SHOWN
M	UTILITY POWER METER
	UFER GROUND
	GROUND ROD
	CURRENT TRANSFORMER RATIO AS NOTED
	DISCONNECT SWITCH SIZED PER FEEDER
PDB	POWER DISTRIBUTION BLOCK

SWITCHES – OPERATOR

SYMBOL	DESCRIPTION
SW	TOGGLE OR DISCONNECT SWITCH
PB	PUSHBUTTON – NORMALLY OPEN, MOMENTARY ACTION
PB	PUSHBUTTON – NORMALLY CLOSED, MOMENTARY UNLESS LOS (LOCK OUT STOP) WHERE MECHANICALLY HELD
PB	PUSHBUTTON, MECHANICALLY CONNECTED, DOUBLE CIRCUIT – NORMALLY CLOSED AND NORMALLY OPEN
HAND OFF AUTO	SELECTOR SWITCH, 3 POSITION – CONTACT STATUS SHOWN EXISTS I.E. AT POSITION OF HAND, OFF, OR AUTO
	SELECTOR SWITCH, 2 POSITION – MIDDLE POSITION IS DELETED
	ALTERNATE METHOD: X00 = HAND 00X = AUTO, 0X0 = OFF
	POTENTIOMETER

SWITCHES – PROCESS

SYMBOL	DESCRIPTION
FS	FLOW SWITCH – CLOSES UPON INCREASING FLOW
FS	FLOW SWITCH – OPENS UPON INCREASING FLOW
LS	LEVEL SWITCH – CLOSES UPON INCREASING LEVEL
LS	LEVEL SWITCH – OPENS UPON INCREASING LEVEL
PS	PRESSURE SWITCH – CLOSES UPON INCREASING PRESSURE (DECREASING VACUUM)
PS	PRESSURE SWITCH – OPENS UPON INCREASING PRESSURE (DECREASING VACUUM)
TS	TEMPERATURE SWITCH – CLOSES UPON INCREASING TEMPERATURE
TS	TEMPERATURE SWITCH – OPENS UPON INCREASING TEMPERATURE
ZS	LIMIT SWITCH – CLOSES AT SET LIMIT
ZS	LIMIT SWITCH – OPENS AT SET LIMIT
WS	TORQUE SWITCH – CLOSES UPON INCREASING TORQUE
WS	TORQUE SWITCH – OPENS UPON INCREASING TORQUE

DEVICES – FRONT PANEL

SYMBOL	DESCRIPTION
X	INDICATING LIGHT, LETTER "X" INDICATES COLOR: R=RED G=GREEN, A=AMBER, W=WHITE Y=YELLOW, B=BLUE
PTT X	INDICATING LIGHT, PUSH TO TEST
ETM	ELAPSED TIME METER

DEVICES – PROTECTIVE

SYMBOL	DESCRIPTION
S	CT SHORTING TERMINAL BLOCK
PTS	FUSED POTENTIAL TRANSFORMER, 208 / 120 V SECONDARY OR AS SHOWN
PM	POWER MONITOR
SPD	SURGE PROTECTION DEVICE
PFR	POWER FAIL REPLAY

DEVICES – RELAY

SYMBOL	DESCRIPTION
M1	CONTACTOR OR STARTER M1
CR 1	CONTROL RELAY CR1
TR 2	TIME DELAY RELAY TR2 – ADJUSTABLE TIME DELAY RANGE & SETTING AS SHOWN
TDOE TDOD	TIME DELAY ON ENERGIZATION TIME DELAY ON DE–ENERGIZATION
107, 121	REFERENCED RELAY WITH N.O. CONTACT ON LINE 107 N.C. CONTACT ON LINE 121
CR1 (105)	NORMALLY OPEN, RELAY CONTACT – ACTUATED BY RELAY CR1 COIL LOCATED ON LINE 105
CR1	NORMALLY CLOSED, RELAY CONTACT – ACTUATED BY RELAY CR1
TR2	NORMALLY OPEN, TIME DELAY RELAY CONTACT – CONTACT CLOSES AFTER TR2 IS ENERGIZED
TR2	NORMALLY CLOSED, TIME DELAY RELAY CONTACT – CONTACT OPENS AFTER TR2 IS ENERGIZED
TR2	NORMALLY OPEN, TIME DELAY RELAY CONTACT – CONTACT OPENS AFTER TR2 IS DE–ENERGIZED
TR2	NORMALLY CLOSED, TIME DELAY RELAY CONTACT – CONTACT CLOSES AFTER TR2 IS DE–ENERGIZED
TR2	CONTACT OPENS AND CLOSES IN A TIMED REPEAT CYCLE

DEVICES – PROTECTIVE

SYMBOL	DESCRIPTION
y xA xP xT	LOW VOLTAGE MOLDED CASE, INSULATED CASE OR POWER CIRCUIT BREAKER. RATINGS AS SHOWN IN DRAWINGS AND AS DEFINED BELOW: xA: CIRCUIT BREAKER AMERAGE xAT: AMPERAGE TRIP xAF: AMPERAGE FRAME xP: NUMBER OF POLES xT: TRIP PROTECTION MCP: MOTOR CIRCUIT PROTECTION TM: THERMAL MAGNETIC L: LONG TIME DELAY S: SHORT TIME DELAY I: INSTANTANEOUS TRIP G: GROUND FAULT A: ARC FLASH PROTECTION 100% DUTY RATED y: BREAKER FEATURES / OPTIONS
100%	
S	– SHUNT TRIP
K	– KIRK–KEY INTERLOCK
M	– MANUALLY CHARGED PUSHBUTTON OPERATION
E	– ELECTRICALLY CHARGED PUSHBUTTON OPERATION
OL	THERMAL OVERLOAD CONTACT
	THERMAL OVERLOAD ELEMENT
	FUSE MEDIUM VOLTAGE CIRCUIT BREAKER
52	TRIP FUNCTIONS PER DRAWINGS AND SPECIFICATIONS
MFR	MULTIFUNCTION RELAY PER SPECIFICATIONS

WIRING – CONNECTIONS

SYMBOL	DESCRIPTION
	PANEL OR EQUIPMENT WIRING
	FIELD WIRING
	CONDUCTORS – NOT CONNECTED
	CONDUCTORS – CONNECTED
	GROUND CONNECTION
	PLUG AND RECEPTACLE
	INCOMING LINE
123 123	TERMINAL BLOCKS WITH TERMINAL NUMBER AS SHOWN OR AS DETERMINED BY SUBMITTAL
123	DISCONNECTING TERMINAL BLOCK
	FUSE
SHIELD CONDUCTOR	SHIELDED CABLE

PLAN – SYMBOLS

SYMBOL	DESCRIPTION
	CONDUIT, EXPOSED
	CONDUIT, IN SLAB OR BELOW GRADE
	CONDUIT, CONCEALED IN WALL OR CEILING
	CONDUIT STUBBED OUT & CAPPED
	CONDUIT BENDS TOWARD OBSERVER
	CONDUIT BENDS AWAY FROM OBSERVER
	CONDUIT ENDS
J	FLEXIBLE CONDUIT CONNECTION FROM J–BOX TO EQUIPMENT
	CONDUIT CHANGE IN ELEVATION
G	BARE COPPER GROUND WIRE
G	GROUND CONNECTION BOLTED TYPE
G	GROUND CONNECTION EXOTHERMIC WELD TYPE
	DISCONNECT SWITCH
	FIELD MOUNTED DEVICE
	TELEPHONE/DATA RECEPTACLE 2 PORT TA568A, 2 CAT 6 CABLES
#	CONDUIT REFERENCE TO SCHEDULE
T	THERMOSTAT
E	EYS SEAL
J	JUNCTION BOX
	PULL BOX OF SIZE SHOWN (CHRISTY BOX SIZE MINIMUM)
A a #	LIGHTING FIXTURE # – CIRCUIT BREAKER NUMBER A – FIXTURE SCHEDULE REF. a – CONTROL SWITCH REFERENCE
WP #7 WP	DUPLEX RECEPTACLE # – CIRCUIT BREAKER NUMBER WP – WEATHERPROOF (IF SHOWN) GFI – GROUND FAULT TYPE
aM	TOGGLE SWITCH a – FIXTURES CONTROLLED 3 – 3 WAY M = MOTION DETECTOR T = TIMER SWITCH
	SPECIAL RECEPTACLE AS REQUIRED FOR EQUIPMENT TO BE CONNECTED

MISCELLANEOUS ABBREVIATIONS

&	AND	N	NEUTRAL
@	AT	NC	NORMALLY CLOSED
A	AMBER, AMPERES	NHC	NORMALLY HELD CLOSED
AC	ALTERNATING CURRENT	NHO	NORMALLY HELD OPEN
ACK	ACKNOWLEDGE	NIC	NOT IN CONTRACT
AFF	ABOVE FINISHED FLOOR	NL	NIGHT LIGHT
AH	AMP HOUR	NO	NORMALLY OPEN
AI	ANALOG INPUT	NTS	NOT TO SCALE
AIC	AMP INTERRUPTING CAPACITY SYMMETRICAL	(N)	NEW
AM	AMP METER	OC	ON CENTER
AO	ANALOG OUTPUT	OI, OIT	OPERATOR INTERFACE
AWG	AMERICAN WIRE GUAGE	OL	OVERLOAD
ATS	AUTOMATIC TRANSFER SWITCH	ORP	OXIDATION REDUCTION POTENTIAL
BATT	BATTERY	P	POLE
BFC	BELOW FINISHED CEILING	PB	PUSHBUTTON
BOD	BIOCHEMICAL OXYGEN DEMAND	PBX	PULL BOX
BPF	BAND PASS FILTER	PDB	POWER DISTRIBUTION BLOCK
BYP	BYPASS	PF	POWER FACTOR
C	CONDUIT	PFR	POWER FAIL RELAY
CAP	CAPACITOR	PH	HYDROGEN ION CONCENTRATION
CB	CIRCUIT BREAKER	PLC	PROGRAMMABLE LOGIC CONTROLLER
CKT	CIRCUIT	PM	POWER MONITOR
COAX	COAXIAL CABLE	PNL	PANEL
COMM	COMMUNICATION	POT	POTENTIOMETER
CR	CONTROL RELAY	PR	PAIR, TWISTED AND SHIELDED
CT	CURRENT TRANSFORMER	PRI	PRIMARY
CS	CONSTANT SPEED	PROVIDE	FURNISH, INSTALL, AND CONNECT
CU	COPPER	PS	PRESSURE SWITCH
DC	DIRECT CURRENT	PT	POTENTIAL TRANSFORMER
DET	DETAIL	PTT	PUSH TO TEST
DI	DIGITAL INPUT	PVC	POLYVINYLCHLORIDE
DISC	DISCONNECT	PWR	POWER
DO	DIGITAL OUTPUT	REF	REFERENCE
DPDT	DOUBLE POLE DOUBLE THROW	RFI	RADIO FREQUENCY INTERFERENCE
DWG	DRAWING	RMS	ROOT MEAN SQUARE
E–DTL	ELECTRICAL DRAWING DETAIL	RTD	RESISTANCE TEMPERATURE DETECTOR
ELEV	ELEVATION	RST	RESET
ENET	ETHERNET	RVAT	REDUCE VOLTAGE AUTO TRANSFORMER
ETM	ELAPSED TIME METER	RTU	REMOTE TERMINAL UNIT
ESW	ETHERNET SWITCH	(R)	REWIRE, RELOCATE, REVISE, REUSE
(E)	EXISTING	SCH	SCHEDULE
FCS	FIELD CONTROL STATION	SEC	SECONDARY, SECOND
FLA	FULL LOAD AMPS	SECS	SECONDS
FLEX	FLEXIBLE LIQUID TIGHT CONDUIT	SEL	SELECTOR
FS	FULL SPEED	SFA	SERVICE FACTOR AMPS
FVNR	FULL VOLTAGE NON–REVERSING	SPEC	SPECIFICATION
FVR	FULL VOLTAGE REVERSING	SPD	SURGE PROTECTIVE DEVICE
FWD	FORWARD	SS	STAINLESS STEEL
(F)	FUTURE	SSRC	STAINLESS STEEL RIGID CONDUIT
GALV	GALVANIZED	SSS	SOLID STATE STARTER
GFI	GROUND FAULT INTERRUPTER	STT	START
GND	GROUND	STP	STOP
GRS	GALVANIZED RIGID STEEL CONDUIT	SV	SOLENOID VALVE
GRS–PVC	PVC COATED GRS CONDUIT	SW	SWITCH
HI	HIGH	SWBD	SWITCHBOARD
HIM	HUMAN INTERFACE MODULE	SYM	SYMMETRICAL
HOA	HAND OFF AUTO	TB	TERMINAL BLOCK
HP	HORSE POWER	TC	TIME CLOCK
HPS	HIGH PRESSURE SODIUM	TDOD	TIME DELAY ON DE–ENERGIZATION
HS	HAND SWITCH	TDOE	TIME DELAY ON ENERGIZATION
HTR	HEATER	TELCO	TELEPHONE COMPANY
HZ	HERTZ	TM	THERMAL MAGNETIC
HZD	HAZARD	TEMP	TEMPERATURE
I	INTERLOCK	TR	TIME DELAY RELAY
I/O	INPUT/OUTPUT	TRIAD	TWISTED AND SHIELDED 3 CONDUCTOR
INST	INSTANTANEOUS	TS	TEMPERATURE SWITCH
ISR	INTRINSICALLY SAFE RELAY	TSPR	TWISTED AND SHIELDED PAIR
IS	INTRINSICALLY SAFE	TVSS	TRANSIENT VOLTAGE SURGE SUPPRESSOR
J	JUNCTION BOX	TYP	TYPICAL
K	KILO, PREFIX	UG	UNDERGROUND
LA	LIGHTNING ARRESTOR	ULH	ULTRA LOW HARMONIC
LC	LIGHTING CONTACTOR	UON	UNLESS OTHERWISE NOTED
LEL	LOWER EXPLOSION LIMIT	UPS	UNINTERRUPTIBLE POWER SUPPLY
LOS	LOCK OUT STOP	V	VOLTAGE
LS	LIMIT SWITCH	VA	VOLT AMPS
M	MOTOR CONTACTOR	VAR	VOLT AMPS REACTIVE
MAG	MAGNETIC FLOWMETER	VFD	VARIABLE FREQUENCY DRIVE
MAX	MAXIMUM	VLV	VALVE
MCC	MOTOR CONTROL CENTER	VM	VOLTMETER
MCM	THOUSAND CIRCULAR MILS	VMR	VOLTAGE MONITOR RELAY
MCP	MOTOR CIRCUIT PROTECTOR	VR	VOLTAGE RELAY
MCS	MOLDED CASE SWITCH	W	WATTS
MH	MANHOLE	WP	WEATHER PROOF, NEMA 3R
MIN	MINIMUM, MINUTE	WTP	WATER TREATMENT PLANT
MODEM	MODEM	WWTP	WASTE WATER TREATMENT PLANT
MOV	MOTOR OPERATED VALVE	XFMR	TRANSFORMER
MTR	MOTOR	Z	IMPEDANCE
MUX	MULTIPLEXER	ZS	LIMIT SWITCH
MV	MERCURY VAPOR, MEDIUM VOLTAGE		

REGISTERED PROFESSIONAL ENGINEER
THOMAS P. FRISCH
No. E15761
ELECTRICAL
STATE OF CALIFORNIA
05/27/2020

DESIGN T. FRISCH
DRAWN N. CONANT
CHECKED M. FRISCH
APPROVED M. FISHER

FRISCH ENGINEERING, INC.
CONSULTING ELECTRICAL ENGINEERS
13405 FOLSOM BLVD, UNIT 600
FOLSOM, CA 95630
PH 916.353.1025
WWW.FRISCHENGINEERING.COM
FILE: 17-082-00-E-01.DWG
DATE: MAY 28, 2020 TIME: 11:01:42AM

WATERWORKS ENGINEERS
2260 Douglas Blvd, Suite 150 • Roseville, CA 95661 • 916-780-2888

CITY OF MORRO BAY
WATER RECLAMATION FACILITY
LIFT STATON AND OFFSITE PIPELINES

ELECTRICAL
SYMBOLS AND ABBREVIATIONS

DATE MAY 2020
PROJECT NUMBER 17-082
DRAWING NUMBER 00-E-01
SHEET NUMBER 182

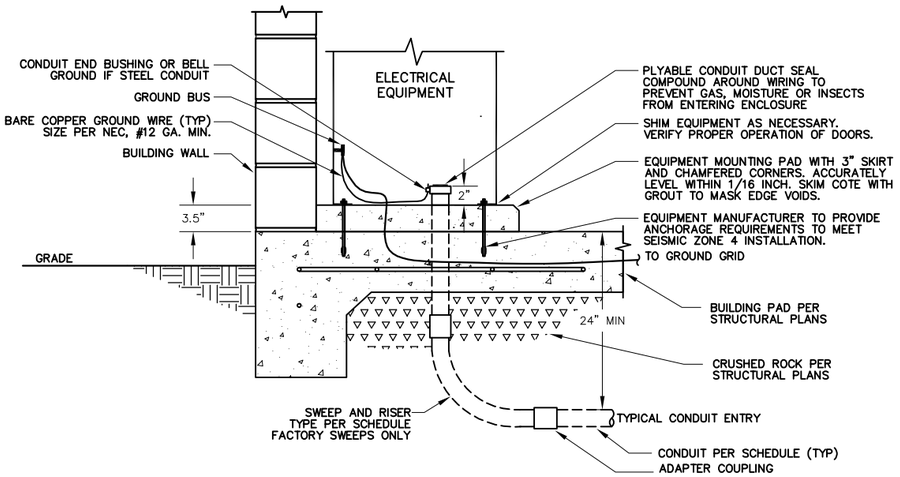

ECP – EQUIPMENT CONCRETE PAD DETAIL

NOT TO SCALE

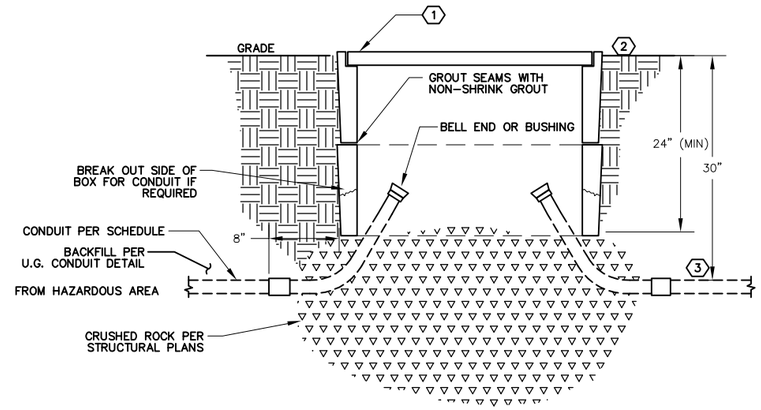

UPB – UNDERGROUND PULL BOX DETAIL

NOT TO SCALE

NOTES:
1. PROVIDE CONCRETE LID IN NON-TRAFFIC AREAS. PROVIDE TRAFFIC RATED STEEL LID IN TRAFFIC AREAS. LABEL COVER PLATE "ELECTRICAL"
2. COLLAR TO BE 1/4" ABOVE SURROUNDING GRADE AND TOP OF PULL BOX
3. CONDUIT BEHIND EYS SHALL BE GRS-PVC FOR 2 FT (MIN).

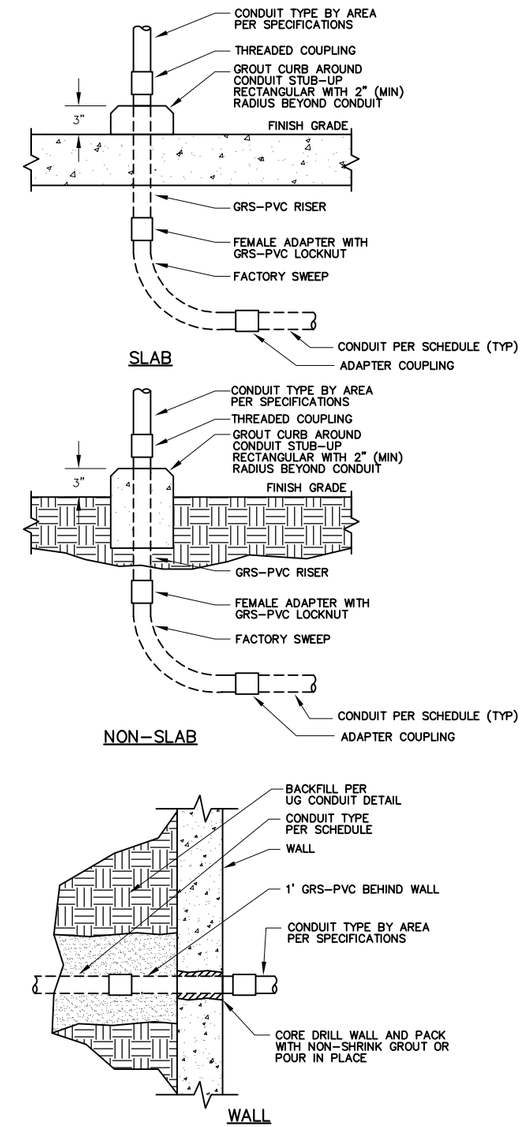

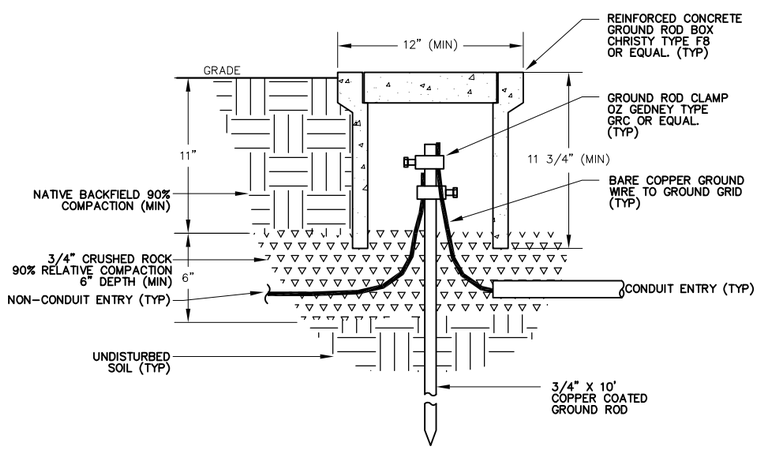

GIB – GROUND INSPECTION BOX DETAIL

NOT TO SCALE

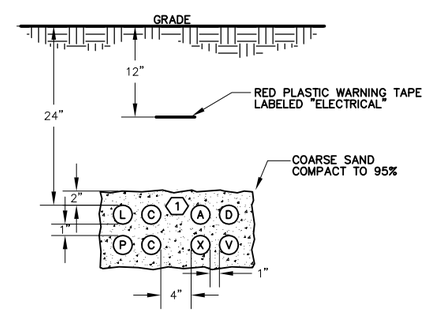

LVC – LOW VOLTAGE NON-DUCT BANK SECTION

NOT TO SCALE

NOTES:
1. NUMBER OF CONDUITS PER PLANS AND SCHEDULE. MAXIMUM DEPTH OF TRENCH SHALL BE 42". DESIGN TRENCH DESIGN AND INSTALL TRENCH TO MAINTAIN 6" VERTICAL CLEARANCE AND 12" HORIZONTAL CLEARANCE FROM PIPES.
2. P, L, OR C DESIGNATION FOR POWER OR CONTROL CONDUITS.
3. A, D, V, OR X DESIGNATION FOR COMMUNICATION (TELEPHONE, DATA, VIDEO, OR INSTRUMENTATION) CONDUITS.
4. USE CONDUIT SPACERS TO SUPPORT CONDUITS AND MAINTAIN SPACING (3' INTERVALS)

ECT – EXPOSED CONDUIT TRANSITION DETAIL

NOT TO SCALE

REGISTERED PROFESSIONAL ENGINEER THOMAS P. FRISCH No. E15761 ELECTRICAL STATE OF CALIFORNIA

05/27/2020

DESIGN T. FRISCH
DRAWN N. CONANT
CHECKED M. FRISCH
APPROVED M. FISHER

FRISCH ENGINEERING, INC.
CONSULTING ELECTRICAL ENGINEERS
13405 FOLSOM BLVD, UNIT 600
FOLSOM, CA 95630
PH 916 353 1025
WWW.FRISCHENGINEERING.COM
FILE: 17-082-00-E-02.DWG
DATE: MAY 28, 2020 TIME: 11:02:22AM

WATERWORKS ENGINEERS
2260 Douglas Blvd, Suite 150 • Roseville, CA 95661 • 916-780-2888

CITY OF MORRO BAY
WATER RECLAMATION FACILITY
LIFT STATON AND OFFSITE PIPELINES

ELECTRICAL
DETAILS 1

DATE MAY 2020
PROJECT NUMBER 17-082
DRAWING NUMBER 00-E-02
SHEET NUMBER 183

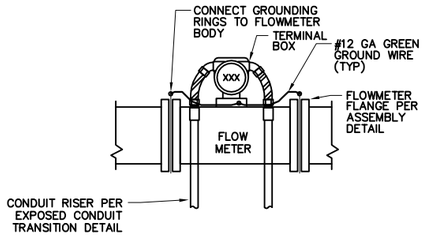

FM – **FLOWMETER DETAIL**
NOT TO SCALE

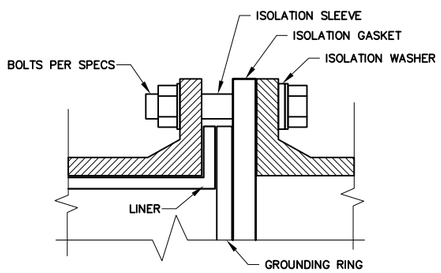

FLG – **FLOWMETER FLANGE ASSEMBLY**
NOT TO SCALE

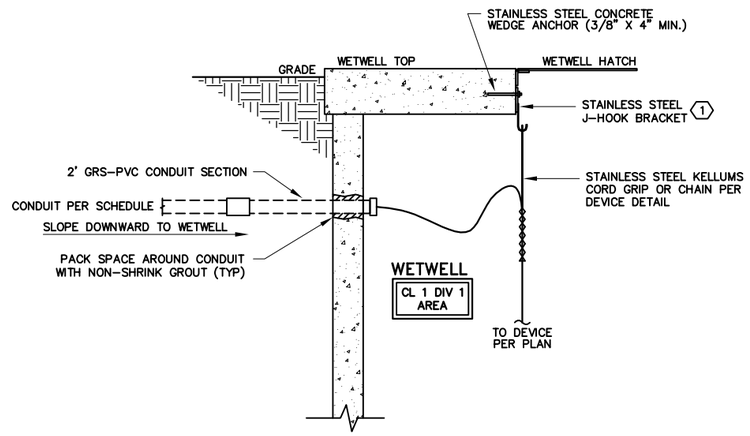

WWE – **WETWELL ENTRY DETAIL**
NOT TO SCALE

NOTES: 1 CUSTOM MANUFACTURERED J-HOOK ASSEMBLY CONSISTING OF STAINLESS STEEL PLATE WITH STAINLESS STEEL J-HOOKS WELDED TO PLATE. PROVIDE ONE HOOK PER WETWELL CABLE.

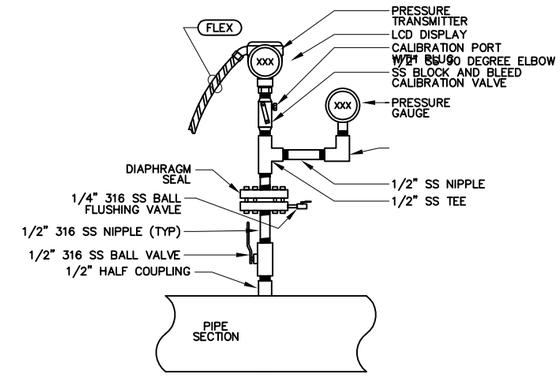

PT – **PRESSURE TRANSMITTER DETAIL**
NOT TO SCALE

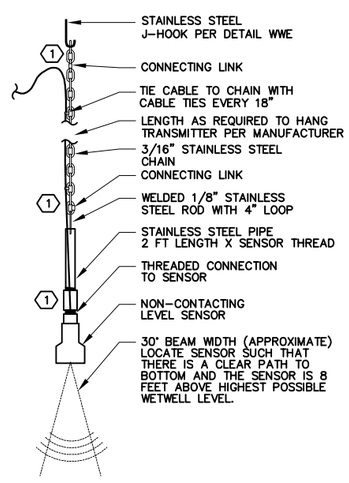

ULT – **ULTRASONIC TRANSMITTER DETAIL**
NOT TO SCALE

NOTES: 1 ALL HARDWARE TO BE 316 STAINLESS STEEL

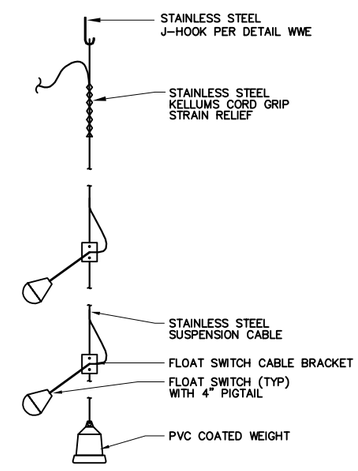

FLTS – **FLOAT SWITCH DETAIL**
NOT TO SCALE

REGISTERED PROFESSIONAL ENGINEER
THOMAS P. FRISCH
No. E15761
ELECTRICAL
STATE OF CALIFORNIA
05/27/2020

DESIGN T. FRISCH
DRAWN N. CONANT
CHECKED M. FRISCH
APPROVED M. FISHER

FRISCH ENGINEERING, INC.
CONSULTING ELECTRICAL ENGINEERS
13405 FOLSOM BLVD, UNIT 600
FOLSOM, CA 95630
PH 916 353 1025
WWW.FRISCHENGINEERING.COM
FILE: 17-082-00-E03.DWG
DATE: MAY 28, 2020 TIME: 6:53:16PM

WATERWORKS ENGINEERS
2260 Douglas Blvd. Suite 150 • Roseville, CA 95661 • 916-780-2888

CITY OF MORRO BAY
WATER RECLAMATION FACILITY
LIFT STATON AND OFFSITE PIPELINES

ELECTRICAL
DETAILS 2

DATE MAY 2020
PROJECT NUMBER 17-082
DRAWING NUMBER 00-E-03
SHEET NUMBER 184

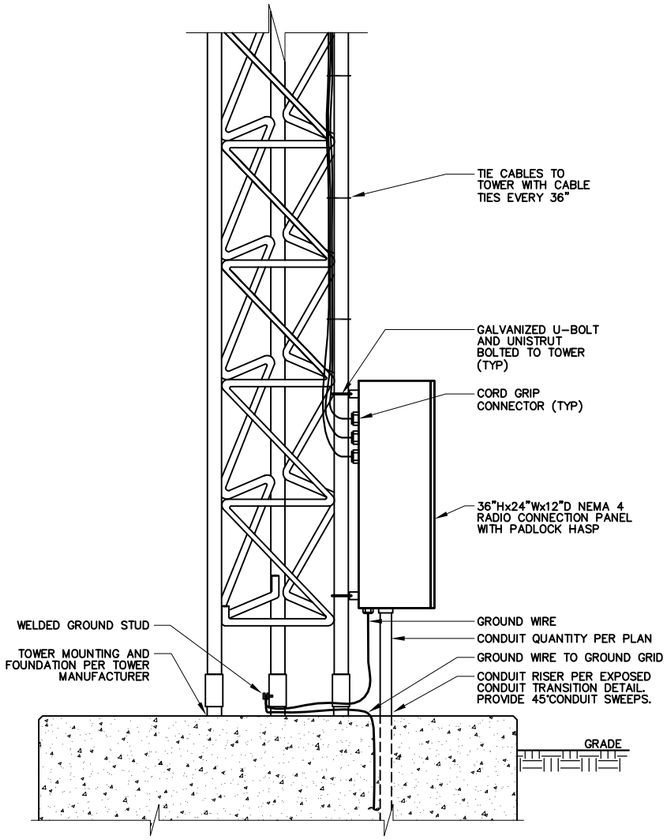

RTP — **RADIO TOWER CONNECTION PANEL**
NOT TO SCALE

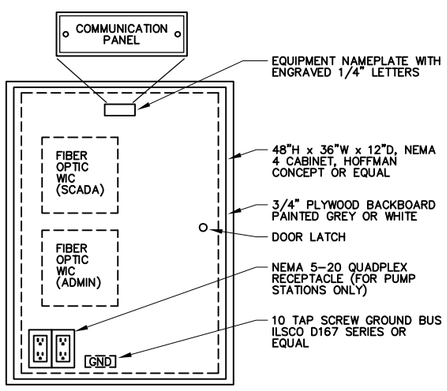

CP — **COMMUNICATION PANEL**
NOT TO SCALE

NOTES: 1. PANEL SHALL BE NEMA 1 WHEN INSTALLED INDOORS AT PUMP STATIONS. PANEL SHALL BE NEMA 3R WHEN INSTALLED OUTDOORS AT STREAM LEVEL MONITORING STATION.

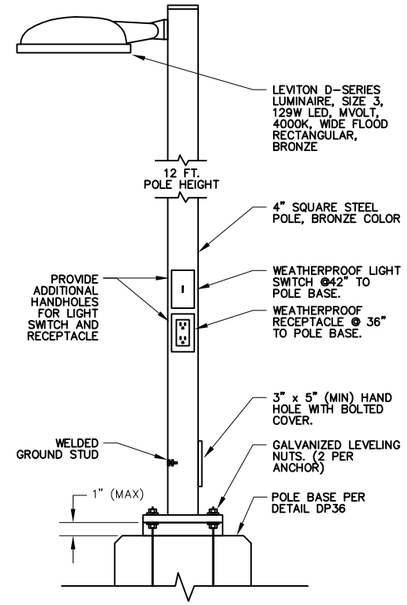

AL — **AREA LIGHT DETAIL**
NOT TO SCALE

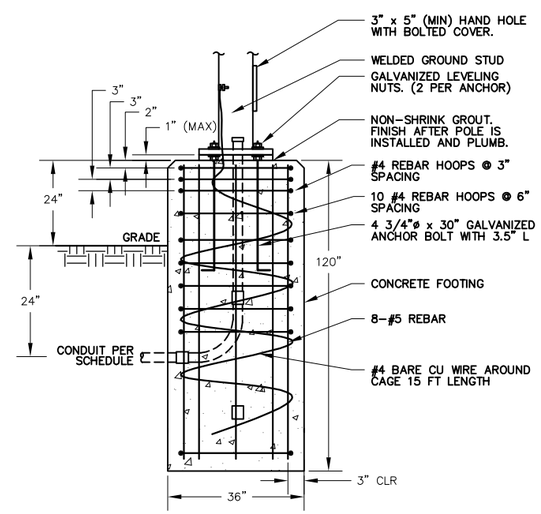

DP36 — **POLE DRILLED PIER DETAIL 36**
NOT TO SCALE

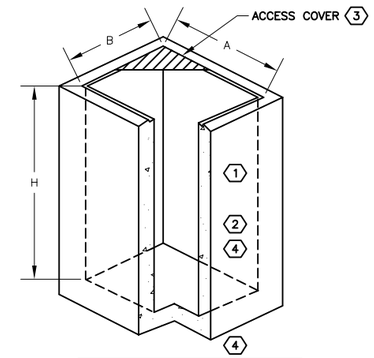

TYPE/ SIZE	DIMENSIONS (MIN)		
	A	B	H
S644	6'	4'	4'
S534	5'	3'	4'
S344	3'	4'	4'
S334	3'	3'	4'
S244	2'	4'	4'
S234	2'	3'	4'
S224	2'	2'	4'

VLT — **ELECTRICAL VAULT DETAIL**
NOT TO SCALE

NOTES:
1. WIRES IN "P", "L" & "C" SERIES CONDUITS SHALL BE SUPPORTED ON ONE SIDE OF VAULT AND WIRES FOR "A", "D" & "S" SERIES ON OTHER SIDE. ALL WIRE SHALL BE STRAPPED TO CABLE SUPPORTS.
2. VAULTS SHALL BE CONSTRUCTED OF RE-INFORCED CONCRETE. PROVIDE VAULT BASE AND GRADE RING(S) AS NECESSARY TO MEET OR EXCEED REQUIRED DEPTH.
3. ACCESS COVERS SHALL BE 1/4" GALVANIZED STEEL CHECKER PLATE, HINGED, 2 PIECE, BOLT DOWN, WITH SPRING ASSIST. COVERS SHALL BE TRAFFIC LOAD RATED. LABEL LID "COMB FIBER OPTIC" WITH WELDED LETTERING.
4. CAULK AND GROUT SEAMS AND AROUND CONDUIT ENTRIES TO SMOOTH FINISH AND PREVENT LEAKS. CONDUIT ENTRANCES SHALL BE PER ENCASED CONDUIT END DETAIL. ATTACH CONDUIT LABELS TO WALL ABOVE CONDUIT.
5. OVER-EXCAVATE AND BACKFILL 18" OF 3/4" CRUSHED ROCK BELOW VAULT. BACKFILL AROUND VAULT WALLS WITH NATIVE SOIL.

REGISTERED PROFESSIONAL ENGINEER
THOMAS P. FRISCH
No. E15761
ELECTRICAL
STATE OF CALIFORNIA
05/27/2020

DESIGN T. FRISCH
DRAWN N. CONANT
CHECKED M. FRISCH
APPROVED M. FISHER

FRISCH ENGINEERING, INC.
CONSULTING ELECTRICAL ENGINEERS
13405 FOLSOM BLVD, UNIT 600
FOLSOM, CA 95630
PH 916 353 1025
WWW.FRISCHENGINEERING.COM
FILE: 17-084-E-004.DWG
DATE: MAY 28, 2020 TIME: 4:05:00PM

WATERWORKS ENGINEERS
2260 Douglas Blvd. Suite 150 • Roseville, CA 95661 • 916-780-2888

CITY OF MORRO BAY
WATER RECLAMATION FACILITY
LIFT STATON AND OFFSITE PIPELINES

ELECTRICAL
DETAILS 3

DATE MAY 2020
PROJECT NUMBER 17-082
DRAWING NUMBER 00-E-04
SHEET NUMBER 185

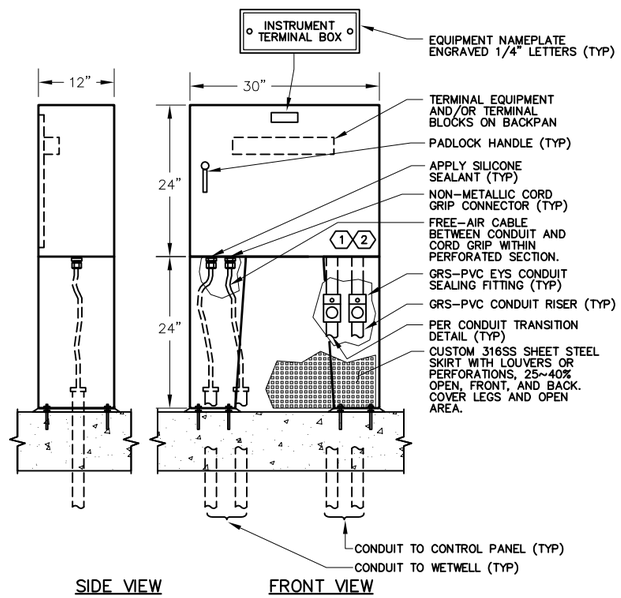

NOTES:
1. USE ALL STAINLESS STEEL HARDWARE. SEAL BOX PENETRATIONS WITH SILICONE GLUE.
2. MOUNT PANEL ON 3/8" SS EPOXY ANCHORS WITH DOUBLE NUT LEVELING. GROUT SPACE BELOW PANEL LEGS.

ITP — INSTRUMENT TERMINATION PANEL

NEMA 4X, 316SS, NOT TO SCALE

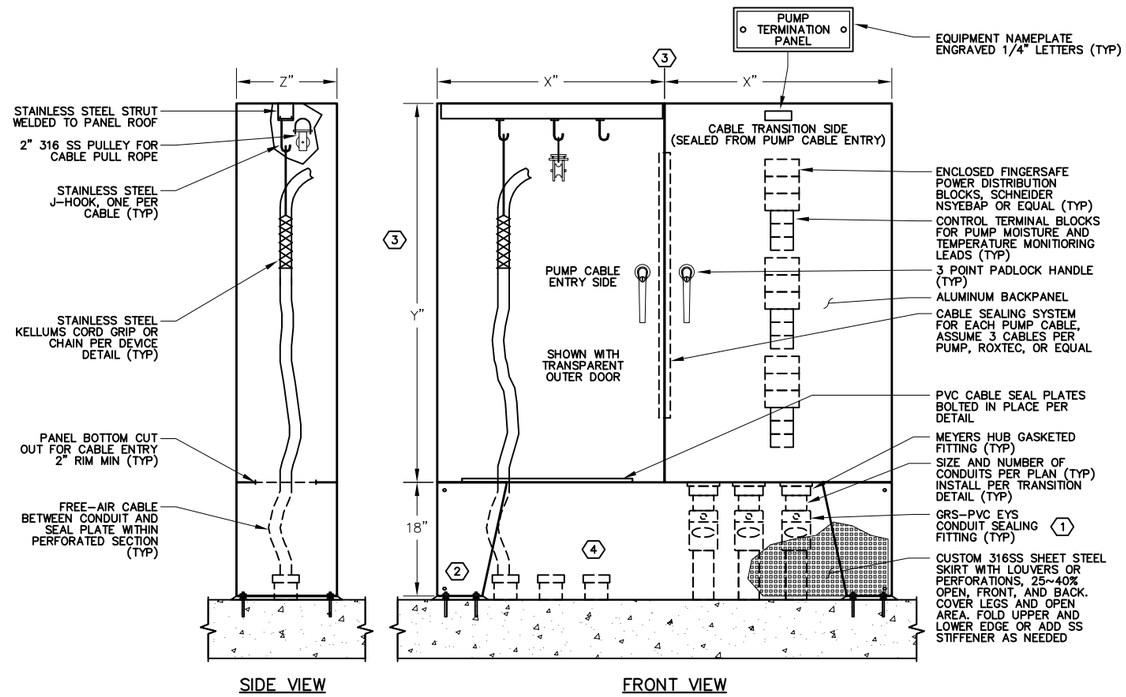

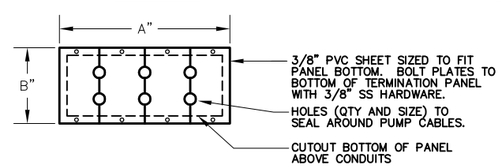

PVC CABLE SEAL PLATES

NOTES:
1. FILL EYS WITH "CHICO" OR EQUAL CONDUIT SEALING COMPOUND AFTER INSPECTION AND TESTING IS COMPLETED.
2. MOUNT PANEL ON 3/8" SS EPOXY ANCHORS WITH DOUBLE NUT LEVELING. GROUT SPACE BELOW PANEL LEGS.
3. EACH OF TWO PANEL SIZES (SIDE BY SIDE) SHALL BE:
   PUMP STATION A: A=8", B=20", X=30", Y=42", Z=12"
   EACH OF TWO PANEL SIZES (SIDE BY SIDE) SHALL BE:
   PUMP STATION B: A=12", B=25", X=36", Y=60", Z=16"
4. SEAL CONDUITS WITH DUCT SEAL, LARGER PUMPS HAVE MULTIPLE CABLES/CONDUITS.

PTP — PUMP TERMINATION PANEL

NEMA 4X, 316SS, NOT TO SCALE

REGISTERED PROFESSIONAL ENGINEER
THOMAS P. FRISCH
No. E15761
ELECTRICAL
STATE OF CALIFORNIA
05/27/2020

DESIGN T. FRISCH
DRAWN N. CONANT
CHECKED M. FRISCH
APPROVED M. FISHER

FRISCH ENGINEERING, INC.
CONSULTING ELECTRICAL ENGINEERS
3405 FOLSOM BLVD, UNIT 600
SACRAMENTO, CA 95820
PH 916 353 1025
WWW.FRISCHENGINEERING.COM
FILE: 17-082-00-E-05.DWG
DATE: MAY 29, 2020 TIME: 11:36:11 AM

WATERWORKS ENGINEERS
2260 Douglas Blvd, Suite 150 • Roseville, CA 95661 • 916-780-2888

CITY OF MORRO BAY
WATER RECLAMATION FACILITY
LIFT STATION AND OFFSITE PIPELINES

ELECTRICAL
SUMP TERMINATION PANELS

DATE MAY 2020
PROJECT NUMBER 17-082
DRAWING NUMBER 00-E-05
SHEET NUMBER 186

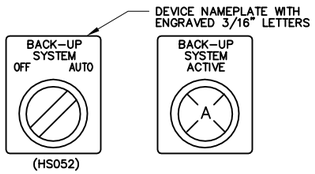

BUTTON LAYOUT

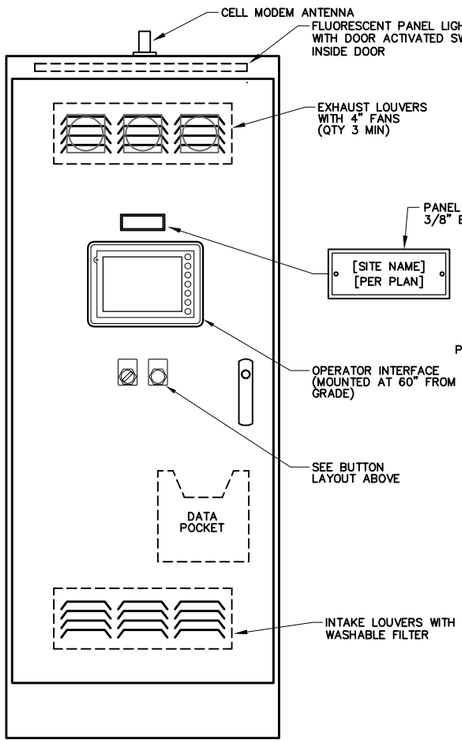

FRONT ELEVATION

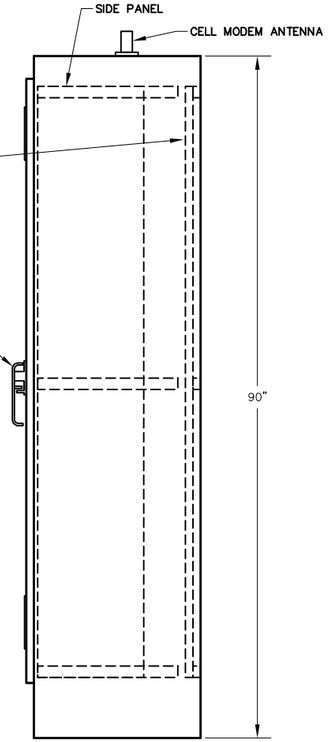

SIDE ELEVATION

ELEVATION

SCALE: 1" = 10"

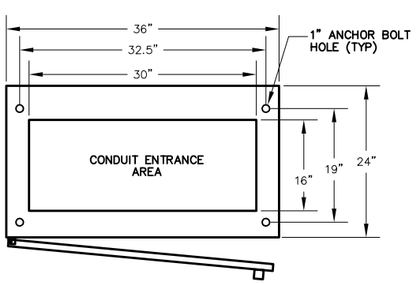

BASE PLAN

PANEL FABRICATION METHODS

1. FREESTANDING, OPEN BOTTOM.
2. OUTER DOOR SEALED WITH RUBBERIZED FOAM GASKET.
3. PANEL SHALL BE FABRICATED FROM PAINT BOND GALVANEAL SHEET STEEL.
4. 12 GAUGE EXTERIOR AND 14 GAUGE INTERIOR.
5. ALL SEAMS SHALL HAVE CONTINUOUS WELD GROUND SMOOTH.
6. DOOR TO BE PADLOCKABLE WITH HEAVY DUTY 3 POINT LATCH.
7. DOOR HINGES AND PINS SHALL BE CONTINUOUS, HEAVY DUTY.
8. NO SCREWS, RIVETS, OR BOLTS SHALL PROTRUDE EXTERNALLY.
9. INTERNAL SCREWS, RIVETS, BOLTS, AND NUTS SHALL BE MACHINE THREAD INTO TAPPED BACKPAN.
10. EXTERIOR PANEL COLOR: ANSI 61 GRAY.
11. MOUNTING PAN AND INTERIOR DOOR COLOR: WHITE.
12. FABRICATION AND WIRING SHALL CONFORM TO U.L. AND NEMA STANDARDS.
13. ALL WIRING SHALL BE PERMANENTLY LABELED WITH WIRE MARKERS ON BOTH ENDS.
14. WIRING DIAGRAMS SHALL BE PLACED IN A PLASTIC DRAWING HOLDER PERMANENTLY ATTACHED TO THE INSIDE OF THE FRONT DOOR.
15. AS – BUILT WIRING DIAGRAMS SHALL BE SHIPPED WITH EQUIPMENT.
16. HOFFMAN TYPE 12 FREE–STANDING, OR EQUAL.

GENERAL NOTES:

1. REPRESENTATIVE OF MAJOR COMPONENTS ONLY. ACTUAL BACKPAN LAYOUT SHALL BE SIMILAR TO LAYOUT SHOWN. SUBMIT SCALED BACKPAN LAYOUT FOR REVIEW BY ENGINEER.
2. QUANTITY OF TERMINAL BLOCKS AND RELAYS SHALL BE AS DETERMINED BY P&IDS AND EXAMPLE I/O WIRING DIAGRAM

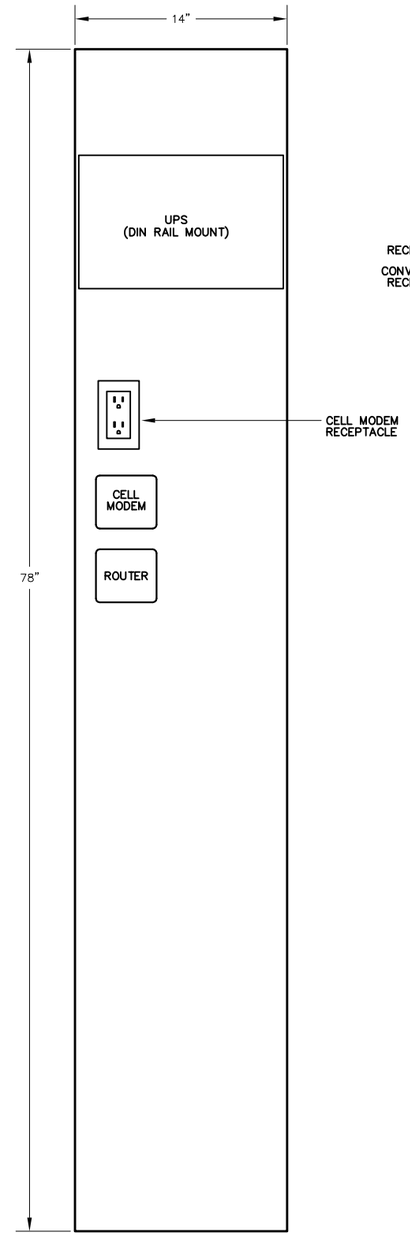

LEFT

SIDEPAN LAYOUT

SCALE: 1" = 5"

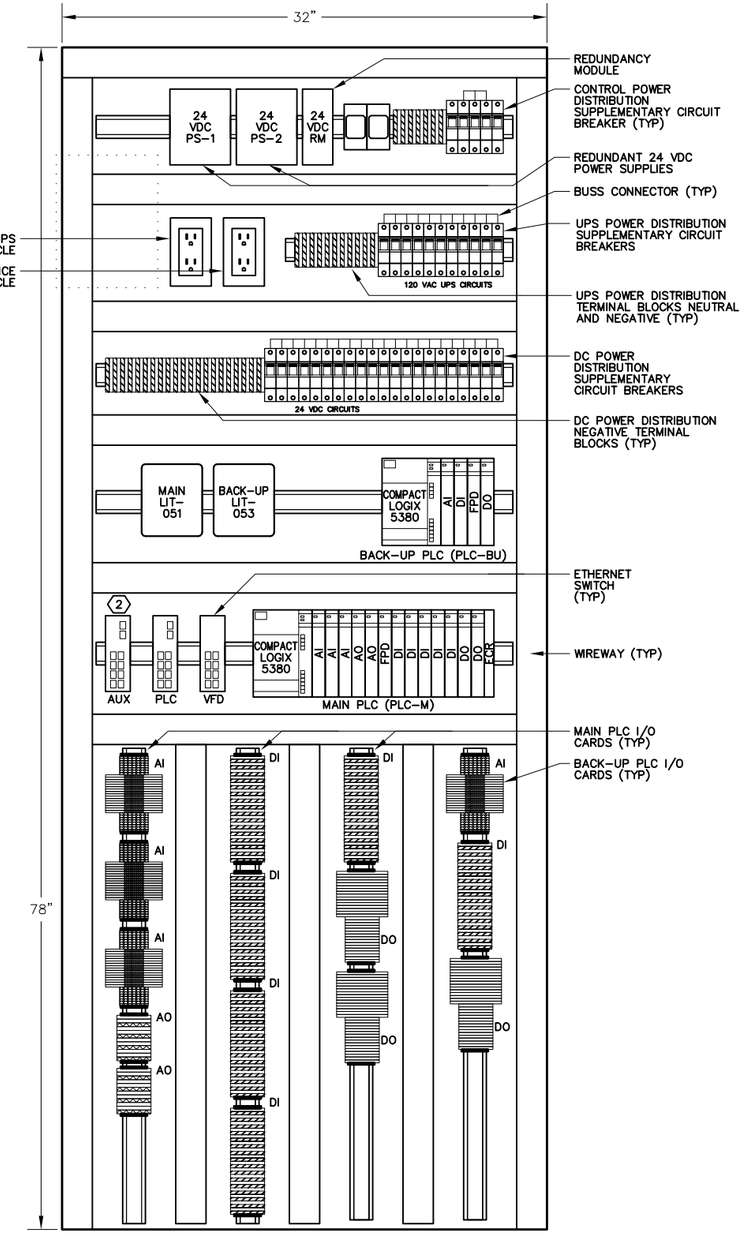

CENTER (1)

BACKPAN LAYOUT

SCALE: 1" = 5"

LAYOUT REFERENCED NOTES:

(1) WIRE I/O TO TERMINAL BLOCK PER EXAMPLE I/O WIRING DIAGRAMS.

(2) ADDITIONAL FIBER OPTIC (AUX) SWITCH ONLY FOR PUMP STATION B. SEE NETWORK TOPOLOGY DWG 00-I-02

REGISTERED PROFESSIONAL ENGINEER
THOMAS P. FRISCH
No. E15761
ELECTRICAL
STATE OF CALIFORNIA

05/27/2020

DESIGN T. FRISCH
DRAWN N. CONANT
CHECKED M. FRISCH
APPROVED M. FISHER

FRISCH ENGINEERING, INC.
CONSULTING ELECTRICAL ENGINEERS
3405 FOLSOM BLVD, UNIT 600
SACRAMENTO, CA 95820
PH 916 353 1025
WWW.FRISCHENGINEERING.COM
FILE: 17-0154-E-006.DWG
DATE: MAY 28, 2020 TIME: 11:03:00AM

WATERWORKS ENGINEERS
2260 Douglas Blvd, Suite 150 • Roseville, CA 95661 • 916-780-2888

CITY OF MORRO BAY
WATER RECLAMATION FACILITY
LIFT STATON AND OFFSITE PIPELINES

ELECTRICAL
CONTROL PANEL ELEVATION AND BACKPAN LAYOUT

DATE MAY 2020
PROJECT NUMBER 17-082
DRAWING NUMBER 00-E-06
SHEET NUMBER 187

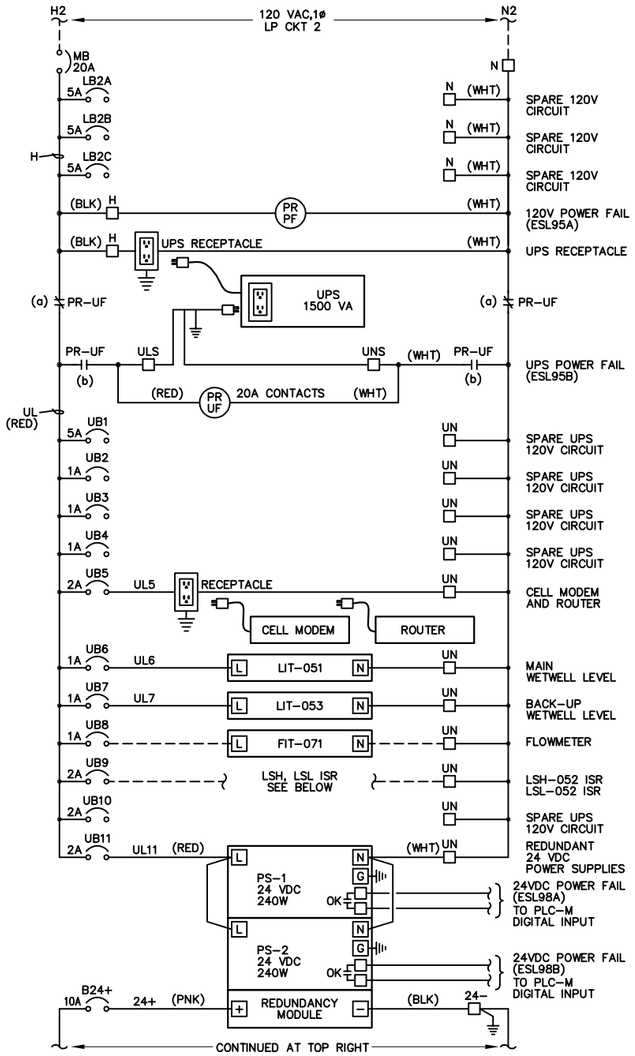

POWER DISTRIBUTION DIAGRAM

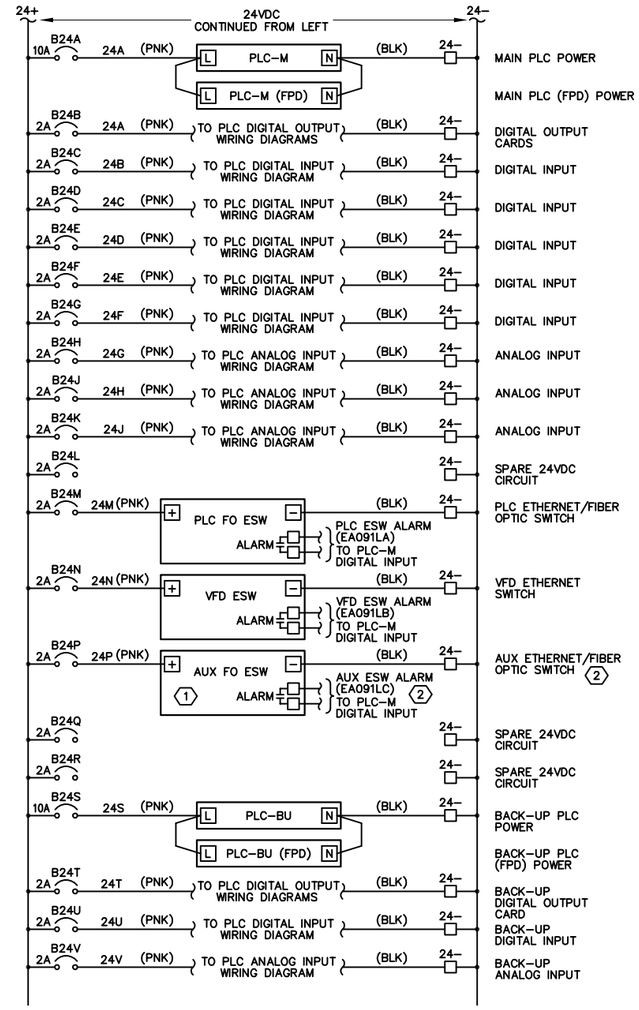

24VDC DISTRIBUTION DIAGRAM – CONTINUED

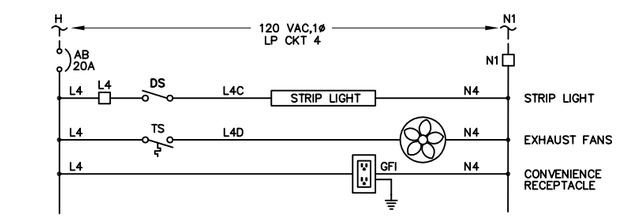

AUXILLIARY POWER DIAGRAM

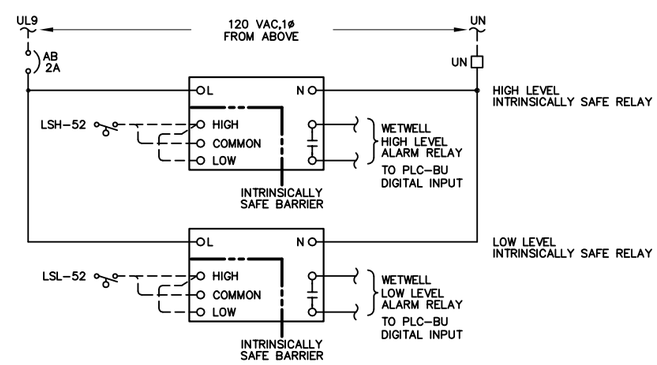

ISR DIAGRAM

ISR REPLAYS LOCATED IN INSTRUMENT JUNCTION BOX

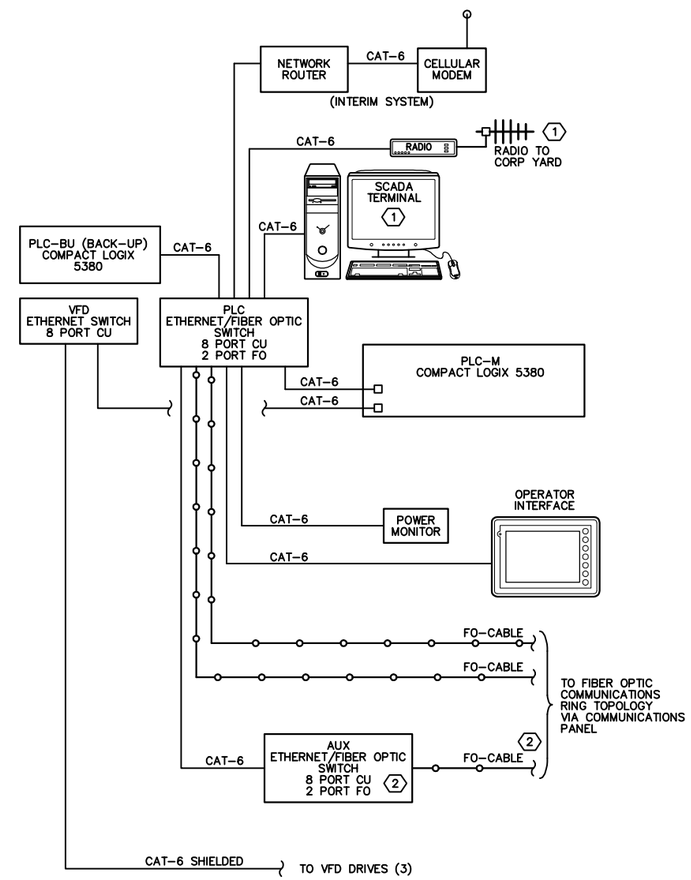

COMMUNICATION BLOCK DIAGRAM

REFERENCED NOTES:

1. SCADA TERMINAL AND RADIO LINK ONLY FOR PUMP STATION A. SEE NETWORK TOPOLOGY DWG 00-I-02
2. AUX SWITCH AND FIBER CONNECTION ONLY FOR PUMP STATION B. SEE NETWORK TOPOLOGY DWG 00-I-02

REGISTERED PROFESSIONAL ENGINEER THOMAS P. FRISCH No. E15761 ELECTRICAL STATE OF CALIFORNIA

05/27/2020

DESIGN T. FRISCH
DRAWN N. CONANT
CHECKED M. FRISCH
APPROVED M. FISHER

FRISCH ENGINEERING, INC.
CONSULTING ELECTRICAL ENGINEERS
3405 FOLSOM BLVD, UNIT 600
SACRAMENTO, CA 95820
PH 916 353 1025
WWW.FRISCHENGINEERING.COM
FILE: 17-082-00-07.DWG
DATE: MAY 28, 2020 TIME: 11:03:10AM

WATERWORKS ENGINEERS
2260 Douglas Blvd, Suite 150 • Roseville, CA 95661 • 916-780-2888

CITY OF MORRO BAY
WATER RECLAMATION FACILITY
LIFT STATION AND OFFSITE PIPELINES

ELECTRICAL
CONTROL PANEL
POWER DISTRIBUTION DIAGRAM

DATE MAY 2020
PROJECT NUMBER 17-082
DRAWING NUMBER 00-E-07
SHEET NUMBER 188

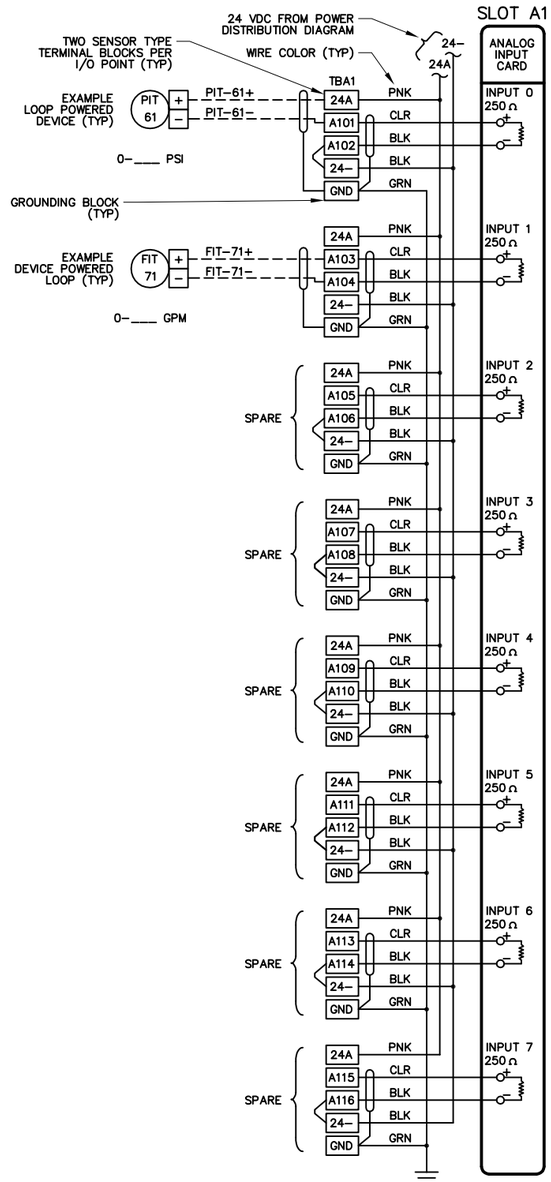

AI CARD

NOTES: 1. TWO CARDS PER DRAWING MAXIMUM.
2. USE MANUFACTURED TERMINAL BLOCK JUMPERS WHERE POSSIBLE

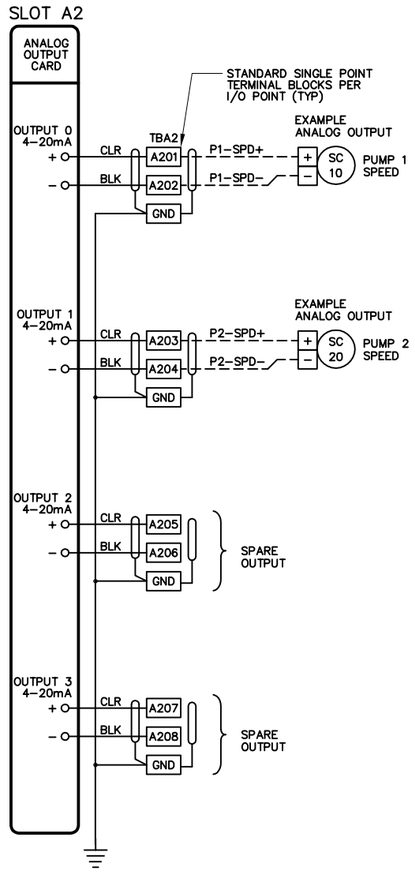

AO CARD

NOTES: 1. TWO CARDS PER DRAWING MAXIMUM.

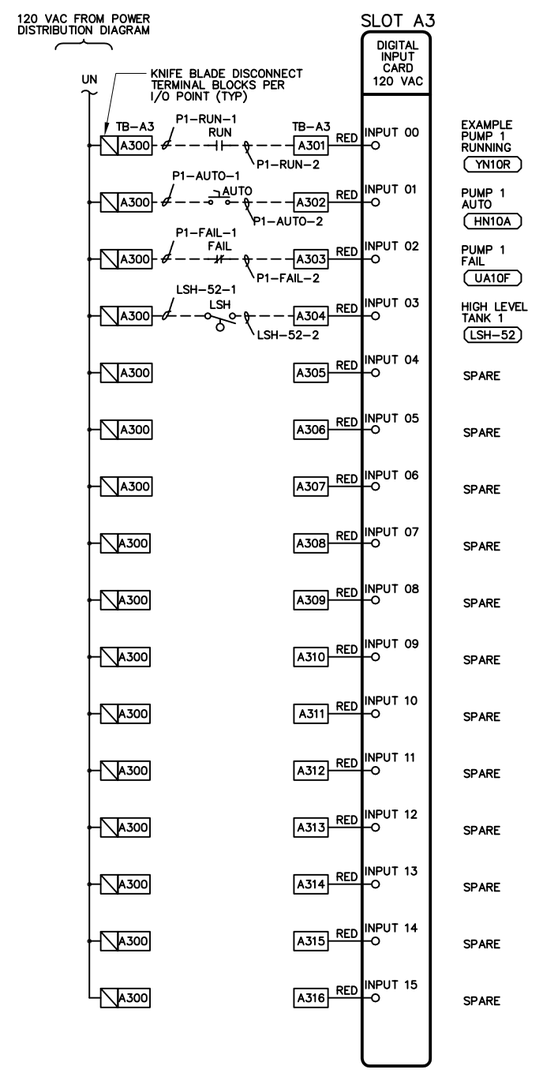

DI CARD

NOTES: 1. TWO CARDS PER DRAWING MAXIMUM.

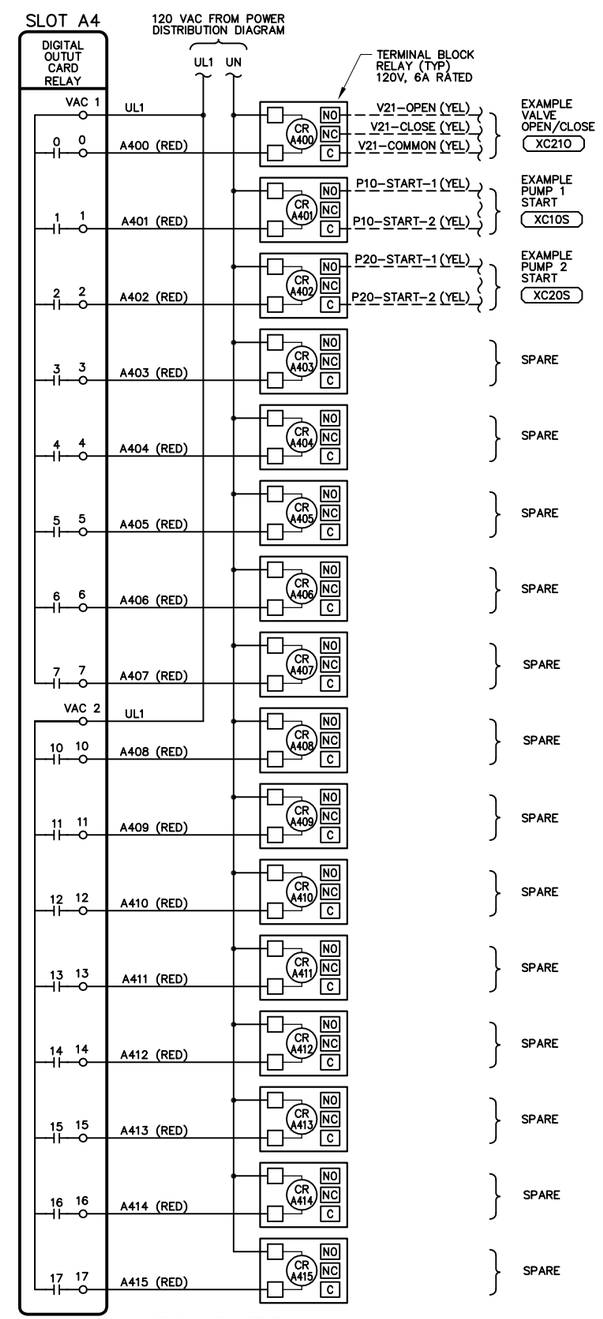

DO CARD

NOTES: 1. TWO CARDS PER DRAWING MAXIMUM.

EXAMPLE PLC I/O WIRING DIAGRAMS

NOTES:
1. WIRE SPARE PLC I/O POINTS TO TERMINAL BLOCKS.
2. EXAMPLE I/O POINTS SHOWN. THIS DRAWING INTENDED TO SHOW I/O WIRING ONLY.
3. I/O TYPE AND NUMBER OF POINTS AND CARDS REQUIRED IS DETERMINED BY P&ID DRAWINGS.
4. MINIMUM 20% SPARE I/O POINTS PER I/O TYPE.
5. INTERNAL PANEL PLC I/O CARD WIRE NUMBERS SHALL BE BUILT AS SHOWN IN EXAMPLE BELOW.

RACK LETTER
SLOT NUMBER
INPUT NUMBER
A101

6. FIELD WIRES SHALL BE LABELED WITH ACRONYM OF CONTROL PANEL ID (NOT SHOWN) AND DEVICE: SEE EXAMPLES.

REGISTERED PROFESSIONAL ENGINEER
THOMAS P. FRISCH
No. E15761
ELECTRICAL
STATE OF CALIFORNIA
05/27/2020

DESIGN T. FRISCH
DRAWN N. CONANT
CHECKED M. FRISCH
APPROVED M. FISHER

FRISCH ENGINEERING, INC.
CONSULTING ELECTRICAL ENGINEERS
3485 FOLSOM BLVD, UNIT 600
FOLSOM, CA 95630
PH 916 353 1025
WWW.FRISCHENGINEERING.COM
FILE: 00-E-08.DWG
DATE: MAY 28, 2020 TIME: 11:03:34AM

WATERWORKS ENGINEERS
2260 Douglas Blvd, Suite 150 • Roseville, CA 95661 • 916-780-2888

CITY OF MORRO BAY
WATER RECLAMATION FACILITY
LIFT STATON AND OFFSITE PIPELINES

ELECTRICAL
CONTROL PANEL
POWER DISTRIBUTION DIAGRAM

DATE MAY 2020
PROJECT NUMBER 17-082
DRAWING NUMBER 00-E-08
SHEET NUMBER 189

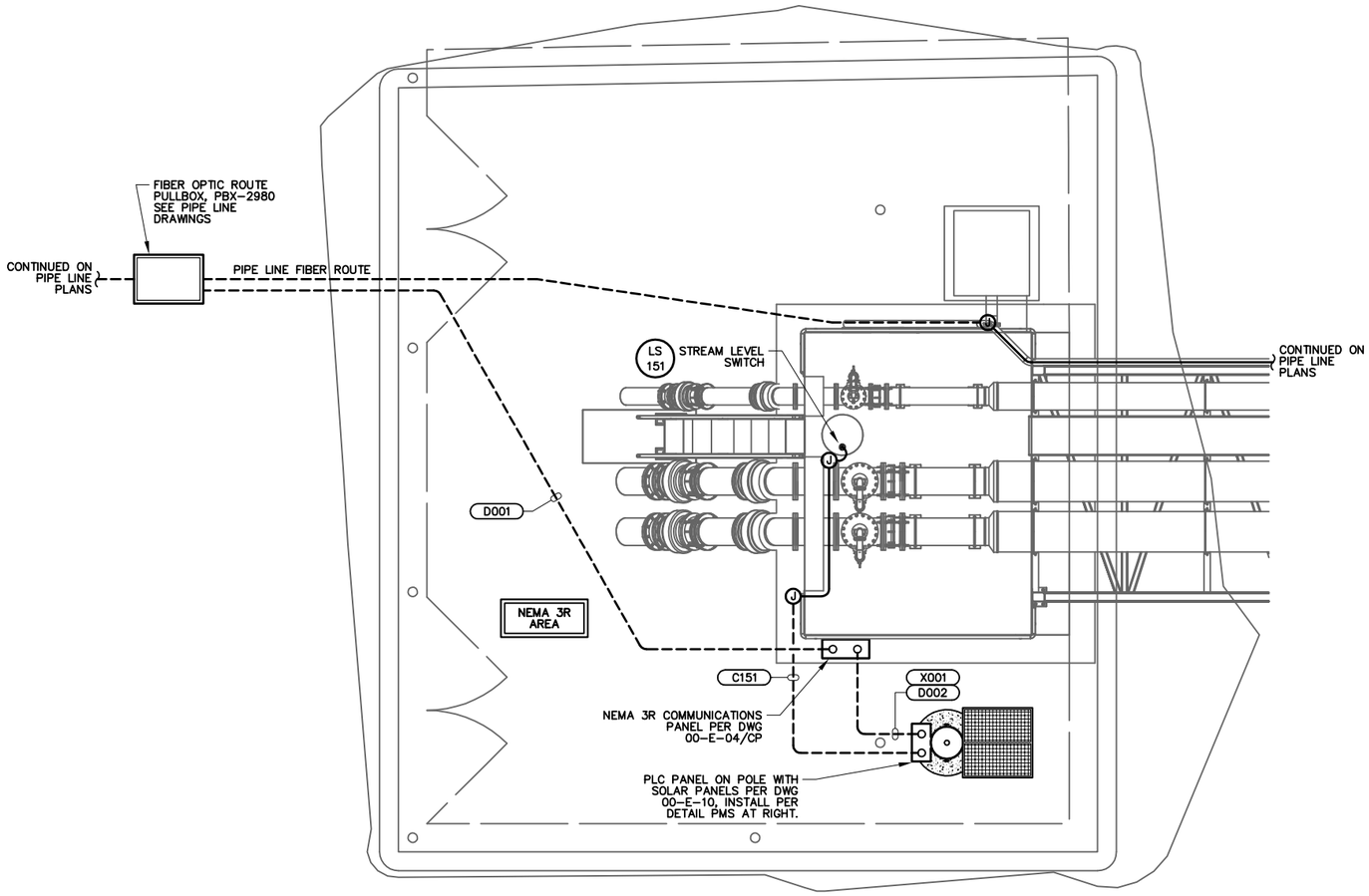

BRIDGE SUMP LEVEL MONITORING ELECTRICAL PLAN

SCALE: 1/4" = 1'

0 4 8
(Approximate Scale In Feet)

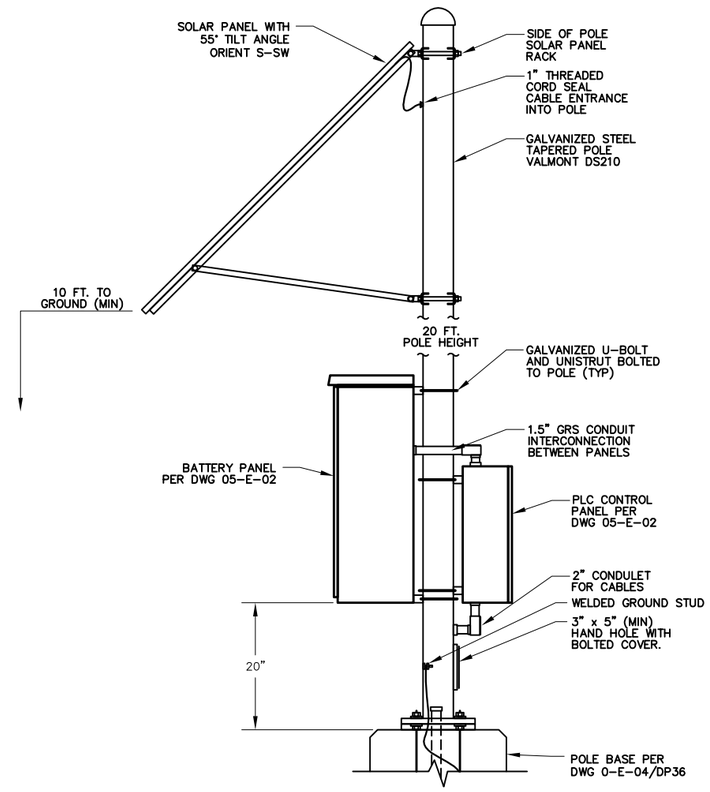

PMS – POLE MOUNTED SOLAR DETAIL
NOT TO SCALE

ELECTRICAL PLAN NOTES:

1. SEE ELECTRICAL SYMBOLS AND ABBREVIATIONS DRAWING FOR SYMBOL DEFINITION.
2. ALL WORK SHALL CONFORM TO LOCAL CODES AND NATIONAL ELECTRIC CODE.
3. SITEPLAN ACCURATE FOR ELECTRICAL WORK ONLY. COORDINATE WITH OTHER DISCIPLINES.
4. CONFIRM HOOKUP REQUIREMENTS FOR ELECTRICAL AND MECHANICAL EQUIPMENT PRIOR TO INSTALLING UNDERGROUND CONDUIT AND STUB-UPS. MISSING CONDUITS, INCORRECT SIZING, OR OTHER ISSUES MUST BE BROUGHT TO THE ATTENTION OF ENGINEER PRIOR TO BACKFILL.
5. CONDUIT ROUTING IS SHOWN GENERALLY DIAGRAMMATIC AND DOES NOT INDICATE TRENCH WIDTH OR TRENCH LAYOUT. FOR CONDUITS OUTSIDE BUILDINGS, IF CONTRACTOR WANTS TO RUN CONDUITS IN ROUTES OTHER THAN THOSE SHOWN FOR ANY REASON, THEN HE SHALL SUBMIT THE PLAN FOR APPROVAL PRIOR TO INSTALLATION. SPECIFY REASON FOR CHANGE.
6. INSTALL NON-UTILITY CONDUITS PER DRAWING DETAILS AND SPECIFICATIONS SECTION 16110.
7. CONDUITS SIZE, TYPE AND FILL DEFINED BY TAG NAME IN CONDUIT AND WIRE ROUTING SCHEDULE.
8. INSTALL UNDERGROUND NON-DUCTBANK CONDUITS PER ELECTRICAL DETAIL LVC.
9. CONDUIT TRANSITIONS SHALL BE PER EXPOSED CONDUIT TRANSITION DETAIL ECT.
10. EXPOSED CONDUIT TYPE AND FITTINGS TO BE USED ABOVE TRANSITION SHALL BE PER AREA CLASSIFICATION DEFINED IN CONDUIT SPECIFICATIONS AND EQUIPMENT SPECIFIC DETAIL.
11. REPAIR SURFACE TO PREVIOUS CONDITION FOR ALL UNDERGROUND CONDUIT ROUTES. GROUT, CAULK, AND PAINT ANY PENETRATIONS INTO STRUCTURES FOR WATERTIGHT SEAL.
12. USE SS EXPANSION WEDGE ANCHORS OR EPOXY ANCHORS AS NECESSARY FOR EQUIPMENT MOUNTING.

CONDUIT & WIRE ROUTING SCHEDULE

REV	CONDUIT DETAILS TAG NO.	FROM	TO	QTY	SIZE	TYPE	POWER WIRE QTY	POWER WIRE SIZE	CONTROL WIRE QTY	CONTROL WIRE SIZE	GROUND SIZE	NOTES
	C151	SUMP LEVEL SWITCH	PLC PANEL	1	3/4"	SPEC	–	–	2	#14	#14	
	D001	FIBER NETWORK	COMMUNICATION PANEL	1	4"	SPEC	–	–	2	FO CABLE	–	
	D002	COMMUNICATION PANEL	PLC PANEL	1	4"	SPEC	–	–	2	FO CABLE	–	
	X001	COMMUNICATION PANEL	PLC PANEL	1	1"	SPEC	–	–	–	–	–	PULL ROPE

NOTES PERTAINING TO CONDUIT SCHEDULE:

1. CONDUIT TYPE "SPEC" IS AS DEFINED IN SPECIFICATIONS SECTION 16110 FOR NON-EXPOSED AND EXPOSED PORTIONS OF CONDUIT RUN.
2. SEE SPECIFICATIONS AND EXPOSED TRANSITION DETAIL OR EQUIPMENT SPECIFIC DETAIL FOR CONDUIT TRANSITION MATERIALS AND METHODS FROM BELOW GROUND TO EXPOSED PORTIONS OF RUN.
3. CONDUITS OVER 15 FT LENGTH (EITHER EMPTY OR WITH CONDUCTORS SIZED LESS THAN #8 AWG), SHALL INCLUDE A POLY PULL STRING. STRING SHALL BE TIED OFF AT EACH END.
4. FITTINGS, CONDULETS, BOXES AND COVERS SHALL MATCH DUTY OF ADJACENT PIPE, SEE SPECIFICATIONS 16110.
5. WIRE SIZING IN TABLE IS BASED ON COPPER CONDUCTORS, THHN INSULATION, WITH TYPE C STRANDING. OTHER CONDUCTOR TYPES, IF ALLOWED OR REQUIRED PER SPECIFICATION, MAY REQUIRE CONDUITS TO BE UPSIZED BY CONTRACTOR AND SUBMITTED FOR APPROVAL.
6. SEE GENERAL NOTES ON LIGHTING AND RECEPTACLE PLAN FOR CONDUIT REQUIREMENTS FOR ELECTRICAL DEVICES WITHOUT CONDUITS SHOWN, CONDUIT NUMBERS, OR NOT LISTED IN SCHEDULE.

REGISTERED PROFESSIONAL ENGINEER
THOMAS P. FRISCH
No. E15761
ELECTRICAL
STATE OF CALIFORNIA
05/27/2020

DESIGN T. FRISCH
DRAWN N. CONANT
CHECKED M. FRISCH
APPROVED M. FISHER

FRISCH ENGINEERING, INC.
CONSULTING ELECTRICAL ENGINEERS
13405 FOLSOM BLVD, UNIT 600
FOLSOM, CA 95630
PH 916 353 1025
WWW.FRISCHENGINEERING.COM
FILE: 17-082-05-E-01.DWG
DATE: MAY 28, 2020 TIME: 11:03:45AM

WATERWORKS ENGINEERS
2260 Douglas Blvd, Suite 150 • Roseville, CA 95661 • 916-780-2888

CITY OF MORRO BAY
WATER RECLAMATION FACILITY
LIFT STATION AND OFFSITE PIPELINES

ELECTRICAL
PIPELINE BRIDGE
SUMP LEVEL MONITORNING
ELECTRICAL PLAN

DATE MAY 2020
PROJECT NUMBER 17-082
DRAWING NUMBER 05-E-01
SHEET NUMBER 190

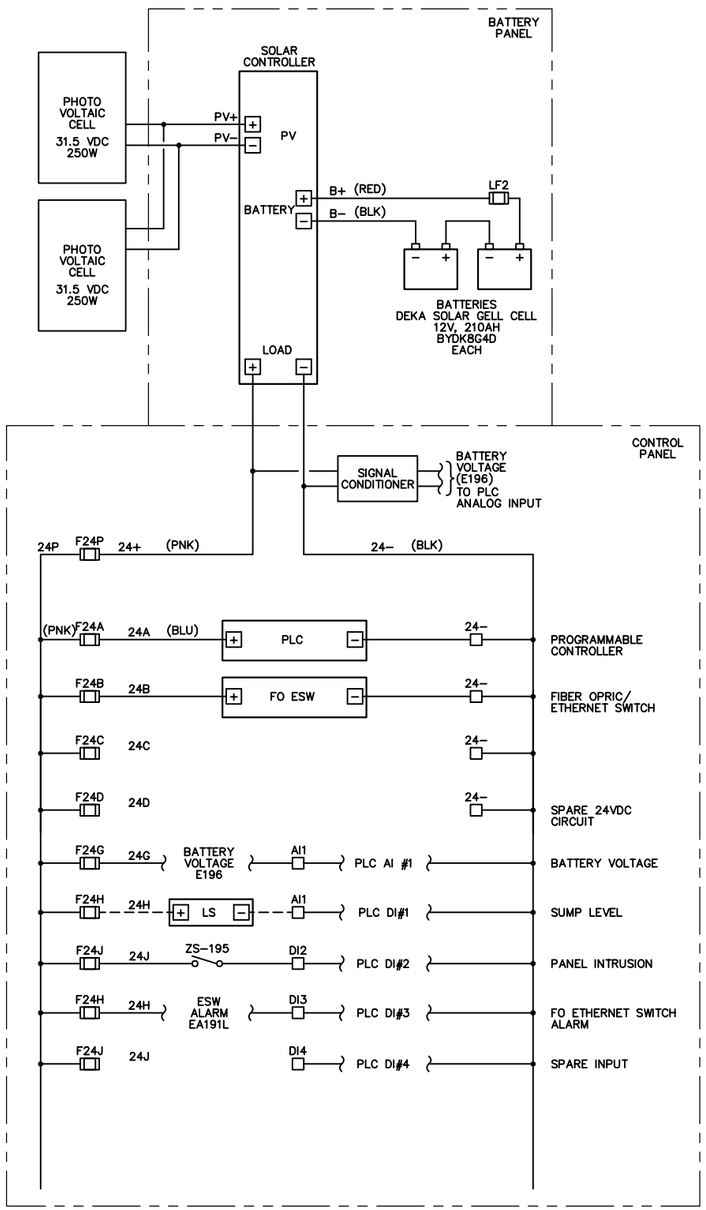

CONTROL PANEL WIRING SCHEMATIC

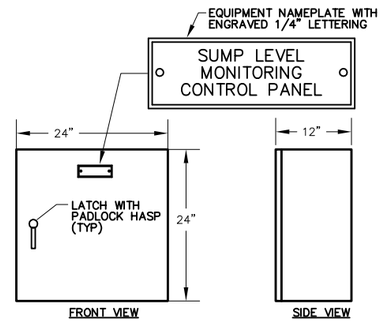

CP – CONTROL PANEL ELEVATION

NOT TO SCALE
NEMA 3R, PAINTED STEEL

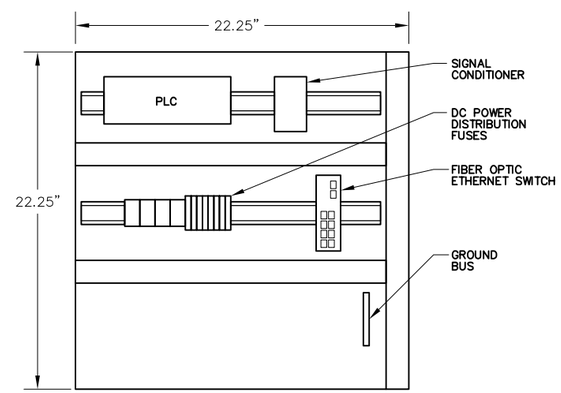

CONTROL PANEL BACKPAN LAYOUT

DRAWING REFERENCED NOTES:

1. RUN #12 WIRE DIRECT TO GROUND BUS. LIGHTNING ARRESTOR SHALL BE MALE/MALE TYPE.

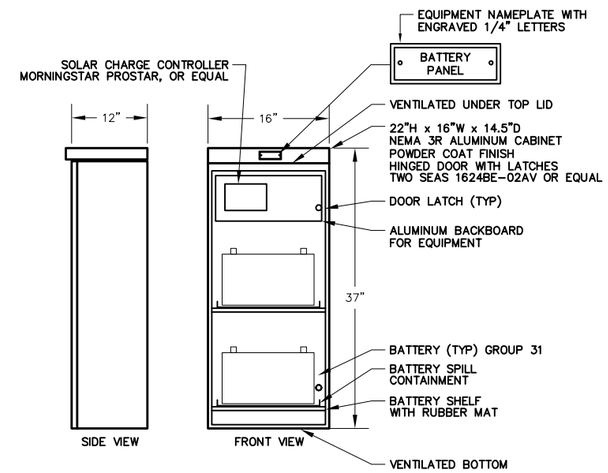

BAT – BATTERY ENCLOSURE

NOT TO SCALE, OUTER DOOR NOT SHOWN

REGISTERED PROFESSIONAL ENGINEER
THOMAS P. FRISCH
No. E15761
ELECTRICAL
STATE OF CALIFORNIA
05/27/2020

DESIGN T. FRISCH
DRAWN N. CONANT
CHECKED M. FRISCH
APPROVED M. FISHER

FRISCH ENGINEERING, INC.
CONSULTING ELECTRICAL ENGINEERS
1325 FOLSOM BLVD, UNIT 600
FOLSOM, CA 95630
PH 916 353 1025
WWW.FRISCHENGINEERING.COM
FILE: 17-082-05-E-02.DWG
DATE: MAY 28, 2020 TIME: 11:03:54AM

WATERWORKS ENGINEERS
2260 Douglas Blvd, Suite 150 • Roseville, CA 95661 • 916-780-2888

CITY OF MORRO BAY
WATER RECLAMATION FACILITY
LIFT STATION AND OFFSITE PIPELINES

ELECTRICAL
PIPELINE BRIDGE
SUMP LEVEL MONITORNING
CONTROL PANEL

DATE MAY 2020
PROJECT NUMBER 17-082
DRAWING NUMBER 05-E-02
SHEET NUMBER 191

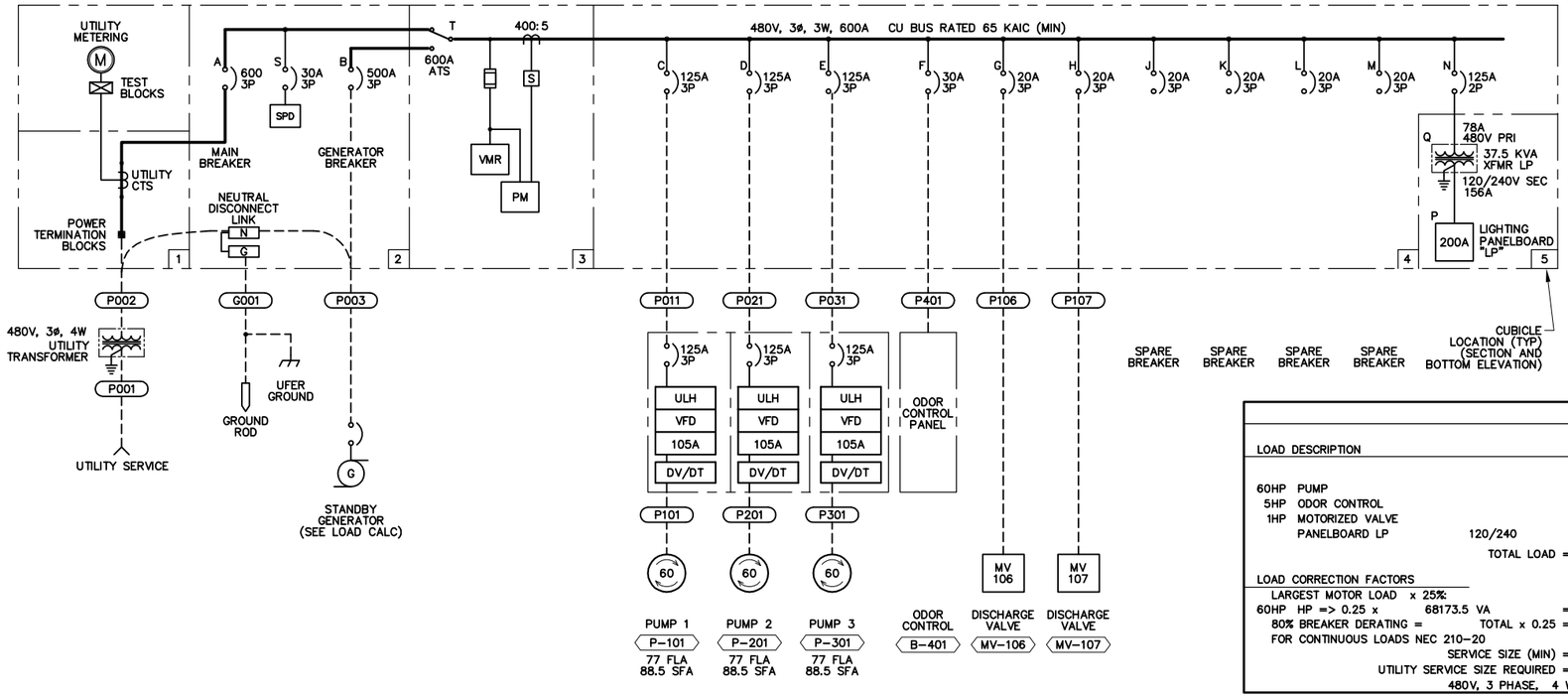

ONE-LINE DIAGRAM

GENERAL NOTES:

1. REAR ACCESS SHALL NOT BE REQUIRED TO SERVICE OR REPLACE SWITCHBOARD COMPONENTS.
2. EACH BREAKER SHALL HAVE A PADLOCKABLE HASP TO LOCK BREAKER IN THE OFF POSITION.
3. ALL DIMENSIONS ARE APPROXIMATE. ACTUAL DIMENSIONS SHALL BE PER MANUFACTURER APPROVED IN SUBMITTAL.
4. FURNISH AND APPLY ENGRAVED WHITE LETTERING ON BLACK PLASTIC NAMEPLATES FOR DEVICES AND BREAKERS WHERE NOTED, AT MINIMUM, WITH A LETTERED BOX. TEXT HEIGHT SHALL BE 1/4 INCH MINIMUM. REFRENCE ONE-LINE DIAGRAM FOR LABEL.
5. FURNISH CODE REQURIED WARNING LABELS AND EQUIPMENT RATINGS LABELS.

NOTES:

ADD THE PREFIX 10 TO COMPLETE CONDUIT, INSTRUMENT OR EQUIPMENT TAG REFFERENCE ON THIS SHEET.

NOTES REFERENCED IN DRAWING:

(1) MOUNT PFR AND POWER MONITOR BEHIND THIS DOOR ACCESS TO DEVICES SHALL BE BEHIND DOOR.

LOAD CALCULATIONS

LOAD DESCRIPTION		CONNECTED LOAD LOAD	QTY	TOTAL	DEMAND LOAD LOAD	QTY	TOTAL	GENERATOR LOAD LOAD	QTY	TOTAL
60HP PUMP		82.00 A	3	204520.6 VA	82.00 A	2	136347.0 VA	82.00 A	2	136347.0 VA
5HP ODOR CONTROL		7.60 A	1	6318.5 VA	7.60 A	1	6318.5 VA	7.60 A	1	6318.5 VA
1HP MOTORIZED VALVE		2.10 A	2	3491.8 VA	2.10 A	1	1745.9 VA	2.10 A	1	1745.9 VA
PANELBOARD LP	120/240	31.99 A	1	26599.0 VA	25.59 A	1	21279.2 VA	25.59 A	1	21279.2 VA
	TOTAL LOAD =	294.60 A	<	244929.9 VA	204.11 A	<	169690.7 VA	204.11 A	<	169690.7 VA
LOAD CORRECTION FACTORS										
LARGEST MOTOR LOAD x 25%										
60HP HP => 0.25 x 68173.5 VA	=	20.50 A		17043.4 VA	20.50 A		17043.4 VA			
80% BREAKER DERATING =	TOTAL x 0.25 =	78.78 A		65493.3 VA	56.15 A		46683.5 VA			
FOR CONTINUOUS LOADS NEC 210-20										
	SERVICE SIZE (MIN) =	393.88 A		327466.6VA	280.76 A		233417.6VA			
	UTILITY SERVICE SIZE REQUIRED =	400 AMP								
	480V, 3 PHASE, 4 WIRE									

GENERATOR SIZE
NAMEPLATE = 250 KW 312.5 KVA
@ TEMP OF 100 deg F
ELEVATION OF 200 FT ASL
DERATED SIZE = 244.3 KW 305.3 KVA
AMPERAGE = 367 A @ 0.8 PF
UTLIZATION % = 63 % @ 0.90 PF

PANEL "LP"

LOCATION:MSB SECTION
ENCLOSURE:NEMA 1A
AIC RATING:10 KAIC

120/ 240 VOLTS, 1 PHASE, 3 WIRE
200 AMP BUS
200 AMP MAIN BREAKER

BKR NO.	DESCRIPTION	LOAD VA	LINE A	LINE B	AMPS/ POLE	BKR NO.	BKR NO.	AMPS/ POLE	LINE A	LINE B	LOAD VA	DESCRIPTION	BKR NO.
1	LIGHTING ELECTRICAL ROOM	336	2.8		20/1	1	2	20/1	5.0		600	CONTROL PANEL	2
3	LIGHTING OUTDOORS	304		2.5	20/1	3	4	20/1		2.5	300	CONTROL PANEL AUXILLIARY	4
5	POLE LIGHT	600	5.0		20/1	5	6	20/1	2.5		300	COMMUNICATION PANEL	6
7	RECEPTACLE ELECTRICAL ROOM	900		7.5	20/1	7	8	20/1		0.0	0	SPARE	8
9	RECEPTACLE ELECTRICAL ROOM	900	7.5		20/1	9	10	15/1	0.0		0	SPARE	10
11	RECEPTACLE OUTDOOR	1200		10.0	20/1	11	12	20/1		15.0	1800	GENERATOR BATTERY CHARGER	12
13	LIGHTING BATHROOM	84	0.7		20/1	13	14	40/2	10.0		1200	GENERATOR HEATER	14
15	RECEPTACLE BATHROOM	900		7.5	20/1	15	16			10.0	1200		16
17	BATHROOM EXHAUST FAN	1200	10.0		20/1	17	18	20/1	12.5		1500	VEHICLE GATE	18
19	SPARE	0		0.0	20/1	19	20	20/1		0.0	0	SPARE	20
21	SPARE	0	0.0		20/1	21	22	30/2	17.5		2100	HVAC OUTDOOR UNIT	22
23	BATHROOM WATER HEATER	4500		37.5	50/2	23	24			17.5	2100		24
25		4500	37.5			25	26	15/1	0.6		75	HVAC INDOOR UNIT	26
27	SPACE	0		0.0		27	28	20/1		0.0	0	SPACE	28
29	SPACE	0	0.0			29	30		0.0		0	SPACE	30
31	SPACE	0		0.0		31	32			0.0	0	SPARE	32
33	SPACE	0	0.0			33	34		0.0		0	SPACE	34
35	SPACE	0		0.0		35	36			0.0	0	SPACE	36
37	SPACE	0	0.0			37	38		0.0		0	SPACE	38
39	SPACE	0		0.0		39	40			0.0	0	SPACE	40
41	SPACE	0	0.0			41	42		0.0		0	SPACE	42

PHASE	A	B
LEFT SIDE AMPS	63.50	65.03
LEFT SIDE KVA	7.62	7.80
TOTAL PHASE KVA	13.40	13.20
TOTAL PHASE AMPS	112	110
% OF AVERAGE	101	99

NEUTRAL

GROUND

A	B	PHASE
48.13	45.00	RIGHT SIDE AMPS
5.78	5.40	RIGHT SIDE KVA
26.60		TOTAL KVA
110.83		TOTAL AMPS @ 240V, 1P
0.80		DIVERSITY FACTOR
21.28		LOAD KVA

NOTES:
1 MEANS OF WIRE COLOR CODING SHALL BE POSTED ON PANELBOARD PER NEC 210 (4)
2 ASTERISK (*) DENOTES GFI BREAKER REQUIRED WITH 5 MA SENSITIVITY
3 TILDA (~) DENOTES GFI BREAKER REQUIRED WITH 30 MA SENSITIVITY

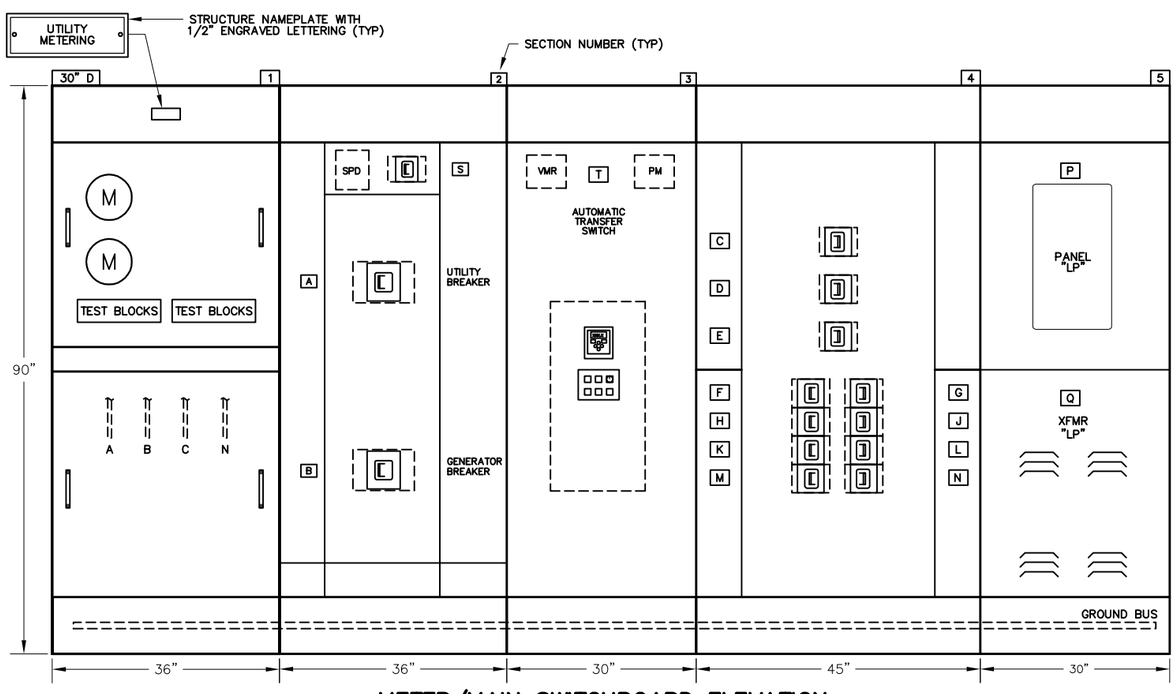

METER/MAIN SWITCHBOARD ELEVATION

NEMA 1, INDOOR

REGISTERED PROFESSIONAL ENGINEER THOMAS P. FRISCH No. E15761 ELECTRICAL STATE OF CALIFORNIA

05/27/2020

DESIGN T. FRISCH
DRAWN N. CONANT
CHECKED M. FRISCH
APPROVED M. FISHER

FRISCH ENGINEERING, INC.
CONSULTING ELECTRICAL ENGINEERS
3405 FOLSOM BLVD, UNIT 600
FOLSOM, CA 95630
PH 916 353 1025
WWW.FRISCHENGINEERING.COM
FILE: 17-0945-001.DWG
DATE: MAY 28, 2020 TIME: 7:09:20PM

WATERWORKS ENGINEERS
2260 Douglas Blvd. Suite 150 • Roseville, CA 95661 • 916-780-2888

CITY OF MORRO BAY
WATER RECLAMATION FACILITY
LIFT STATON AND OFFSITE PIPELINES

ELECTRICAL
PUMP STATION A METER/MAIN ONE-LINE AND ELEVATION

DATE MAY 2020
PROJECT NUMBER 17-082
DRAWING NUMBER 10-E-01
SHEET NUMBER 192

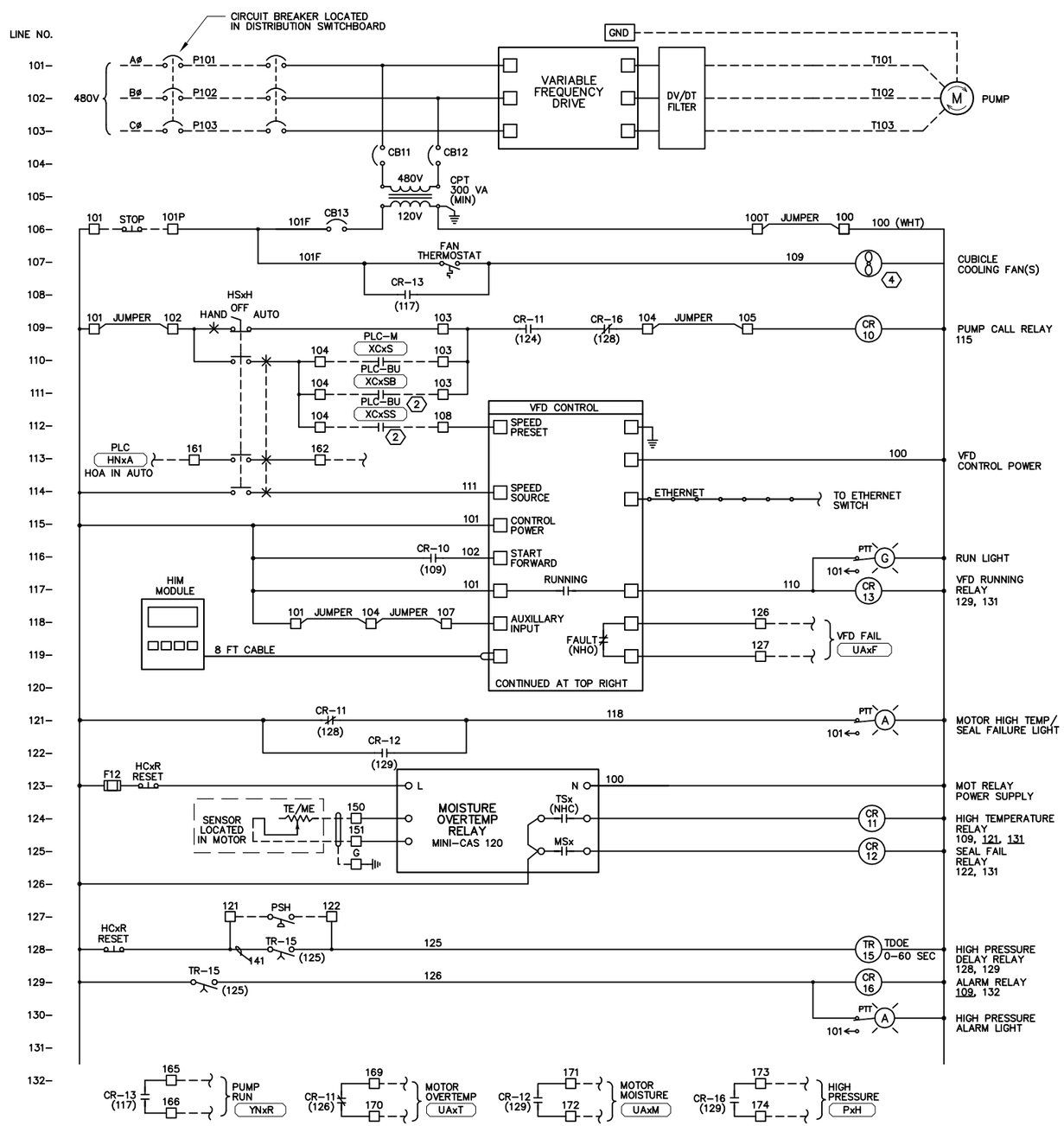

VFD ELEMENTARY DIAGRAM

P101 P201 P301

SIMILAR DIAGRAM FOR PUMPS 10, 20, 30 – SEE NOTES

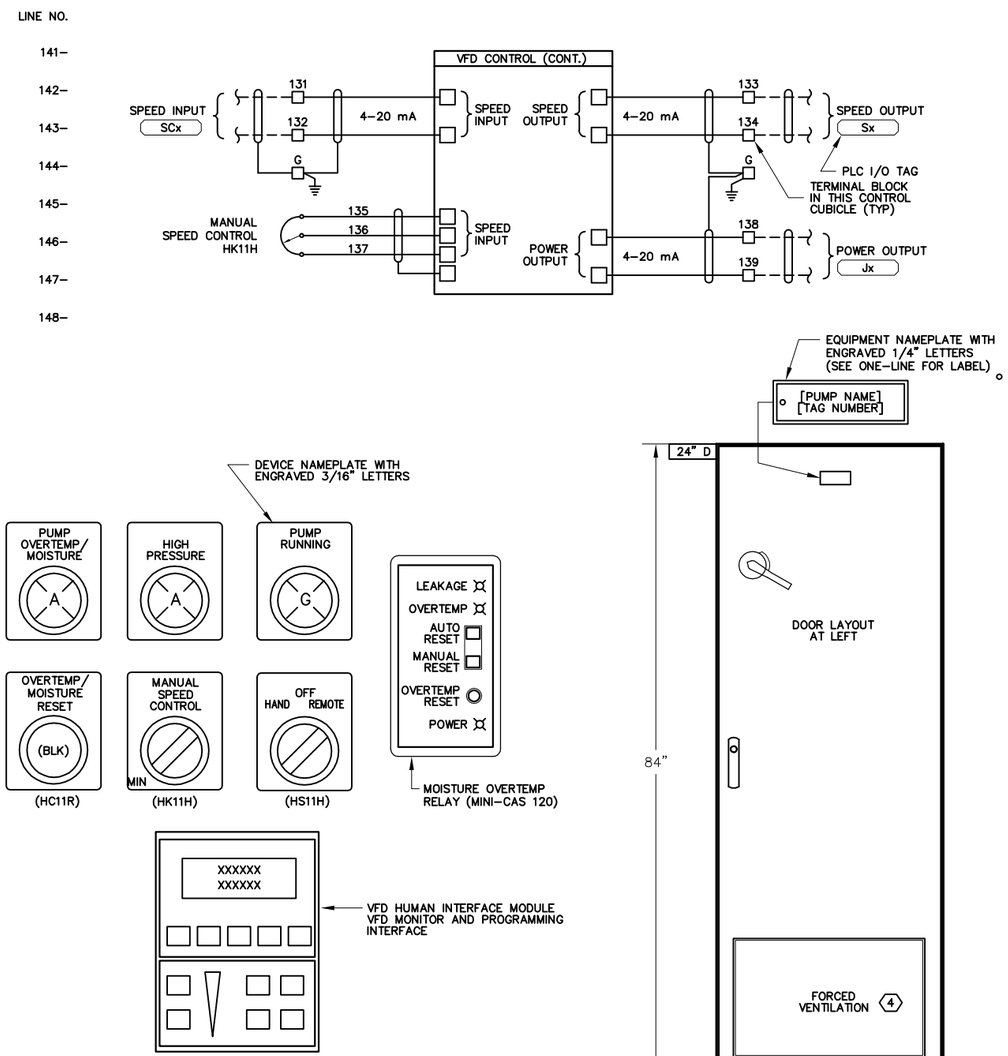

DOOR LAYOUT

CABINET BUILT VFD PANEL ELEVATION

NOT TO SCALE

NOTES REFERENCED IN DRAWING:

1. RELAY TO BE SUPPLIED BY PUMP MANUFACTURER. INSTALL AND WIRE PER MANUFACTURER'S DRAWINGS PRIOR TO FACTORY TESTING AND DELIVERY TO JOB SITE.
2. FROM BACK-UP CONTROLS. SEE CONTROL PANEL DRAWGINS DWG 00-E-06 – 00-E-08.
3. PROVIDE VFD WITH 115 VAC CONTROL CIRCUIT INTERFACE. NO EXCEPTIONS.
4. PROVIDE COOLING FANS AS REQUIRED TO REMOVE HEAT GENERATED BY INTERNAL COMPONENTS AND MAINTAIN TEMPERATURE WITHIN DRIVE MANUFACTURER RATINGS.

GENERAL NOTES:

1. SIMILAR DIAGRAM FOR PUMP NO. 1 ~ 3.
2. TERMINAL BLOCKS AND WIRES SHALL BE LABELED SAME EXCEPTION: WIRES TO PLC SHALL BE NUMBERED PER CONTROL PANEL TERMINAL BLOCK NUMBER.

REGISTERED PROFESSIONAL ENGINEER THOMAS P. FRISCH No. E15761 ELECTRICAL STATE OF CALIFORNIA

05/27/2020

DESIGN T. FRISCH
DRAWN N. CONANT
CHECKED M. FRISCH
APPROVED M. FISHER

FRISCH ENGINEERING, INC.
CONSULTING ELECTRICAL ENGINEERS
3405 FOLSOM BLVD, UNIT 600
SACRAMENTO, CA 95820
PH 916 353 1025
WWW.FRISCHENGINEERING.COM
CALIF. CORP. 1522-095

FILE: 17-082-10-E-02.DWG
DATE: MAY 28, 2020 TIME: 4:11:52PM

WATERWORKS ENGINEERS
2260 Douglas Blvd, Suite 150 • Roseville, CA 95661 • 916-780-2888

CITY OF MORRO BAY
WATER RECLAMATION FACILITY
LIFT STATION AND OFFSITE PIPELINES

ELECTRICAL
VFD ELEMENTARY DIAGRAM

DATE	MAY 2020
PROJECT NUMBER	17-082
DRAWING NUMBER	10-E-02
SHEET NUMBER	193

ELECTRICAL PLAN NOTES:

1. SEE ELECTRICAL SYMBOLS AND ABBREVIATIONS DRAWING FOR SYMBOL DEFINITION.
2. ALL WORK SHALL CONFORM TO LOCAL CODES AND NATIONAL ELECTRIC CODE.
3. SITEPLAN ACCURATE FOR ELECTRICAL WORK ONLY. COORDINATE WITH OTHER DISCIPLINES.
4. CONFIRM HOOKUP REQUIREMENTS FOR ELECTRICAL AND MECHANICAL EQUIPMENT PRIOR TO INSTALLING UNDERGROUND CONDUIT AND STUB-UPS. MISSING CONDUITS, INCORRECT SIZING, OR OTHER ISSUES MUST BE BROUGHT TO THE ATTENTION OF ENGINEER PRIOR TO BACKFILL.
5. CONDUIT ROUTING IS SHOWN GENERALLY DIAGRAMMATIC AND DOES NOT INDICATE TRENCH WIDTH OR TRENCH LAYOUT. FOR CONDUITS OUTSIDE BUILDINGS, IF CONTRACTOR WANTS TO RUN CONDUITS IN ROUTES OTHER THAN THOSE SHOWN FOR ANY REASON, THEN HE SHALL SUBMIT THE PLAN FOR APPROVAL PRIOR TO INSTALLATION. SPECIFY REASON FOR CHANGE.
6. INSTALL NON-UTILITY CONDUITS PER DRAWING DETAILS AND SPECIFICATIONS SECTION 16110.
7. CONDUITS SIZE, TYPE AND FILL DEFINED BY TAG NAME IN CONDUIT AND WIRE ROUTING SCHEDULE.
8. INSTALL UNDERGROUND NON-DUCTBANK CONDUITS PER ELECTRICAL DETAIL LVC.
9. CONDUIT TRANSITIONS SHALL BE PER EXPOSED CONDUIT TRANSITION DETAIL ECT.
10. EXPOSED CONDUIT TYPE AND FITTINGS TO BE USED ABOVE TRANSITION SHALL BE PER AREA CLASSIFICATION DEFINED IN CONDUIT SPECIFICATIONS AND EQUIPMENT SPECIFIC DETAIL.
11. REPAIR SURFACE TO PREVIOUS CONDITION FOR ALL UNDERGROUND CONDUIT ROUTES. GROUT, CAULK, AND PAINT ANY PENETRATIONS INTO STRUCTURES FOR WATERTIGHT SEAL.
12. USE SS EXPANSION WEDGE ANCHORS OR EPOXY ANCHORS AS NECESSARY FOR EQUIPMENT MOUNTING.
13. RECEPTACLES TO BE GROUND FAULT INTERRUPTER (GFI) TYPE AND WEATHERPROOF (WP) OUTDOORS AND WHERE SHOWN.
14. STUB UP CONDUITS BENEATH GENERATOR FRAME PER MANUFACTURER RECOMMENDATIONS. USE FLEXIBLE CONDUIT FOR TRANSITION BETWEEN EXPOSED CONDUIT TRANSTION AND ELECTRICAL CONNECTION BOX AND GENERATOR CONTROL PANEL.
15. UTILITY PRIMARY AND SECONDARY CONDUITS, TRANSFORMER PAD, PULL BOXES AND REMOVABLE BOLLARDS SHALL BE INSTALLED PER POWER UTILITY ENGINEERED DRAWINGS AND STANDARDS.
16. ASSUME 100 FT OF UNDERGROUND RUN BEYOND DRAWING FOR UTILITY CONNECTIONS. CONNECTION POINT SHALL BE AS DETERMINED BY UTILITY.

DRAWING REFERENCED NOTES:

1. HANG PUMP CABLES ON J-HOOKS IN WETWELL TO ALL PUMPS.
2. HVAC EQUIPMENT PER PUMP STATION A HVAC PLAN SEE DWG 10-E-04

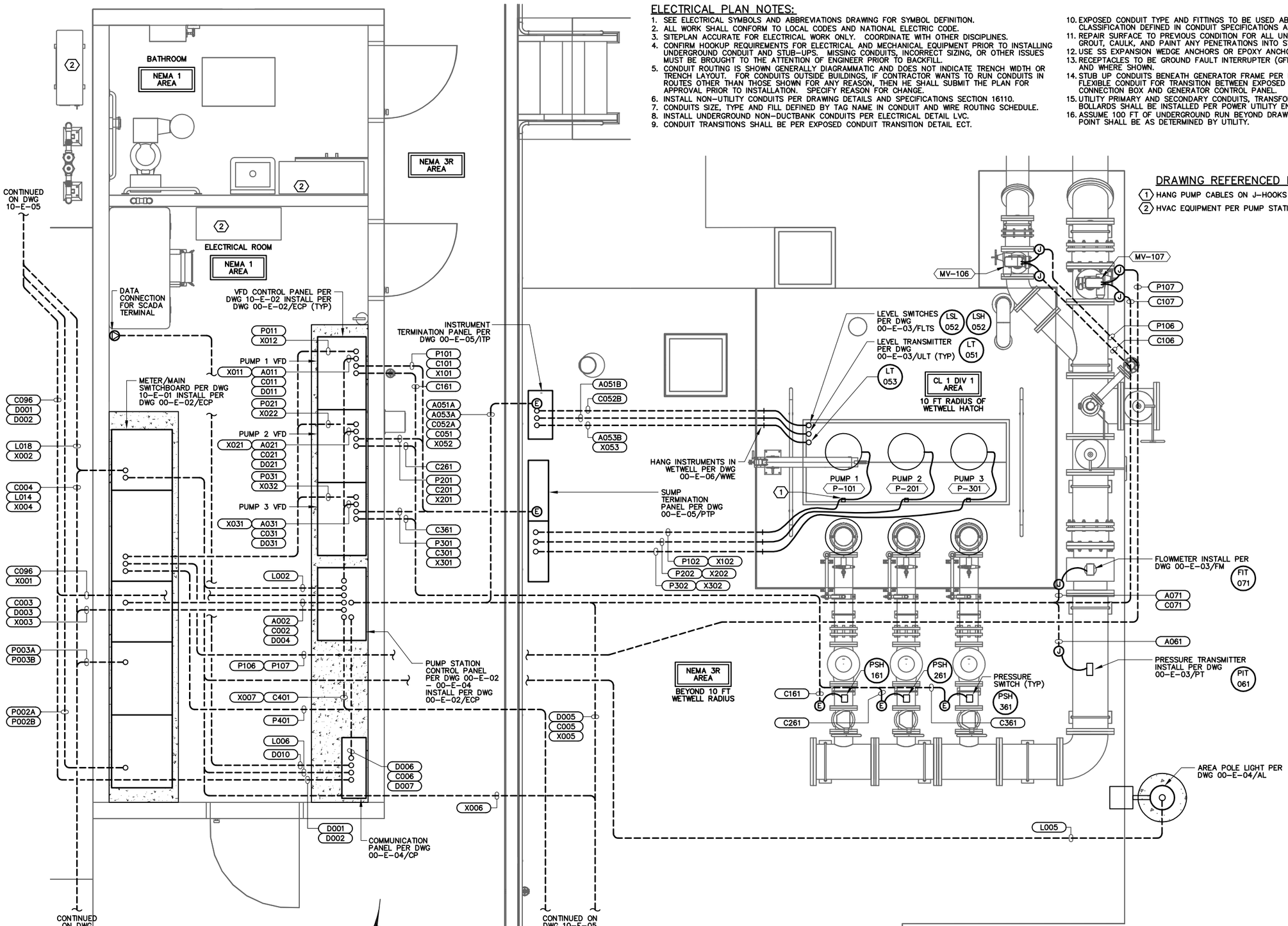

PUMP STATION A POWER AND CONTROL PLAN

SCALE: 1/2" = 1'

0 2 4 (Approximate Scale in Feet)

NOTES:

ADD THE PREFIX 10 TO COMPLETE INSTRUMENT OR EQUIPMENT TAG REFFERENCE ON THIS SHEET. EXAMPLE: P-10101 FOR PUMP 1

REGISTERED PROFESSIONAL ENGINEER THOMAS P. FRISCH No. E15761 ELECTRICAL STATE OF CALIFORNIA

05/27/2020

DESIGN T. FRISCH
DRAWN N. CONANT
CHECKED M. FRISCH
APPROVED M. FISHER

FRISCH ENGINEERING, INC.
CONSULTING ELECTRICAL ENGINEERS
13405 FOLSOM BLVD, UNIT 600
FOLSOM, CA 95630
PH 916 353 1025
WWW.FRISCHENGINEERING.COM

FILE: 17-082-E-03.DWG
DATE: MAY 29, 2020 TIME: 2:11 8:1 OPM

WATERWORKS ENGINEERS
2260 Douglas Blvd. Suite 150 • Roseville, CA 95661 • 916-780-2888

CITY OF MORRO BAY
WATER RECLAMATION FACILITY
LIFT STATON AND OFFSITE PIPELINES

ELECTRICAL
PUMP STATION A
POWER AND CONTROL PLAN

DATE MAY 2020
PROJECT NUMBER 17-082
DRAWING NUMBER 10-E-03
SHEET NUMBER 194

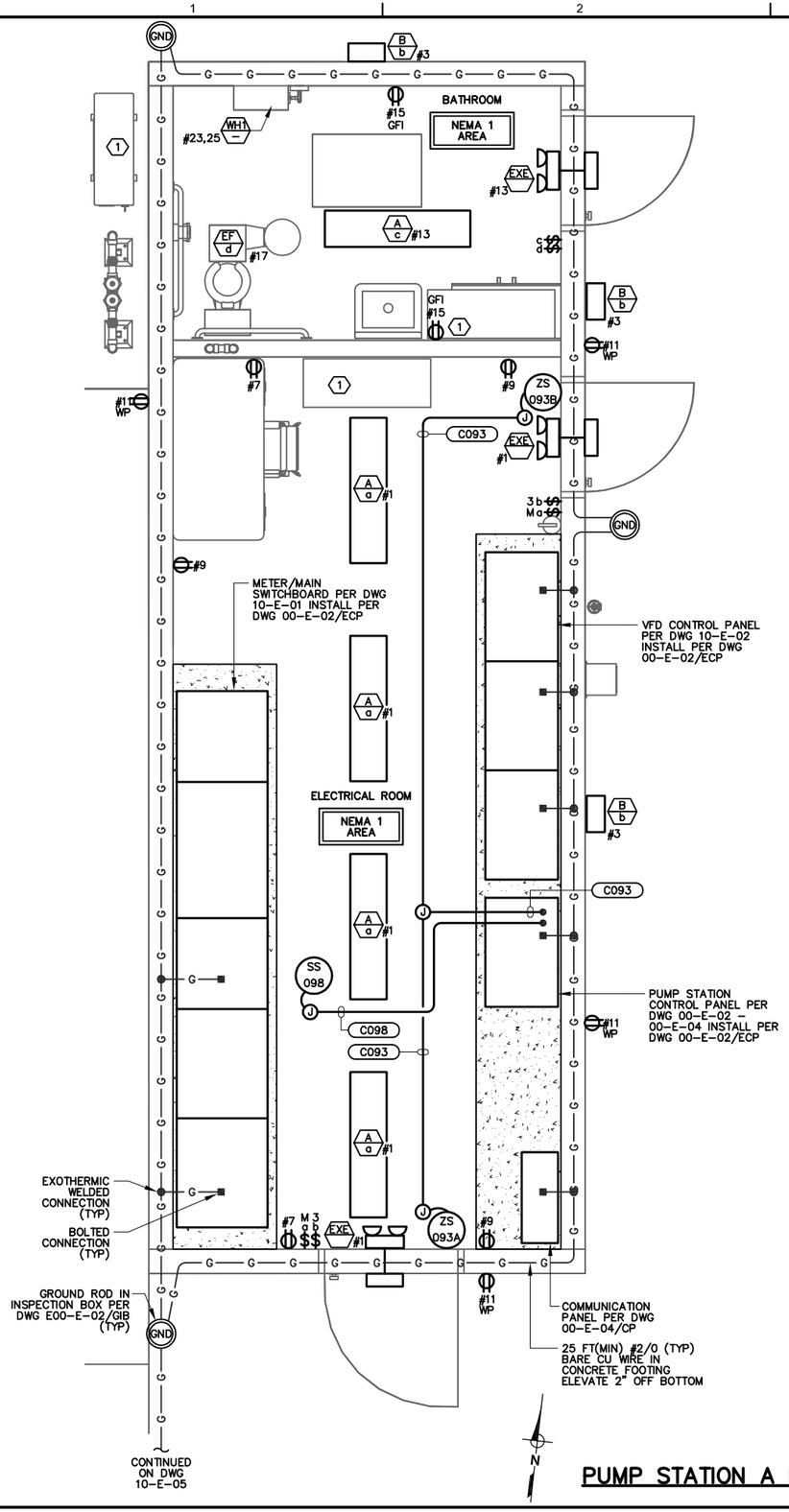

PUMP STATION A LIGHTING AND RECEPTACLE PLAN

SCALE: 1/2" = 1'

0 2 4 (Approximate Scale in Feet)

FIXTURE SCHEDULE

CODE LETTER	FIXTURE TYPE	FIXTURE LAMPS	WATTS/ FIXTURE	MANUFACTURER OR APPROVED EQUAL	MOUNTING ARRANGEMENT	NOTES
A	STRIP LUMINAIRE, 4 FT, VAPORTIGHT MOLDED POLYCARBONATE HOUSING FROSTED LENS, MEDIUM DISTRIBUTION	6000 LUMEN 4500K	120V 50W	ATLAS ILW48LED4D RAB SEAL4-50/D10	CEILING MOUNT FIXTURE	U.L. LISTED -20F TO 140F
B	WALL PACK LIGHT – MEDIUM DARK BRONZE COLOR ALUMINUM CASE	7000 LUMEN 4000K	120V 64W	ATLAS WPM64LED RAB WPLEDFC80N/PCS	WALL MOUNT 15 FT AFF	U.L. LISTED FOR WET LOCATIONS PHOTOCELL CONTROL FULL CUTOFF
EXE	EXIT LIGHT PACK WITH EGRESS LAMPS AND REMOTE OUTDOOR EGRESS FIXTURE LED LAMPS WITH RED LED SIGN INTEGRAL BATTERY AND CHARGER	2 LED 3W	120V 5W	DUAL-LITE HCX-U-R-W-03L-RC12 CPRSB0603L	WALL MOUNT 9 FT AFF	WHITE INTERIOR, BROWN EXTERIOR DUAL LED LAMPS INDOORS AND OUT 12W REMOTE LIGHT CAPACITY
WH1	TANKLESS WATER HEATER WALL MOUNT ENCLOSURE 3/4" COPPER PIPE INLET/OUTLET	9.5 KW 40A 240VAC, 1PH	9.5 KW	PER CIVIL SPECIFICATIONS	WALL MOUNT NEXT TO SINK	
EF	EXHAUST FAN		120 VAC	SEE MECHANICAL		
IDU	INDOOR HVAC UNIT		120 VAC	SEE MECHANICAL		
ODU	OUTDOOR HVAC UNIT		240 VAC	SEE MECHANICAL		PROVIDE DISCONNECT
RDU	REFRIGERANT DISTRIBUITON UNIT		120 VAC	SEE MECHANICAL		

DRAWING REFERENCED NOTES:

1. HVAC EQUIPMENT PER PUMP STATION A HVAC PLAN SEE RIGHT

GENERAL NOTES THAT APPLY TO LIGHTING AND RECEPTACLE PLAN.

1. THESE NOTES SHALL APPLY TO ALL EQUIPMENT OR FIXTURES WITH ELECTRICAL CONNECTIONS BUT WITHOUT CONDUITS SHOWN, CONDUIT NUMBERS, OR NOT LISTED IN SCHEDULE.
2. PROVIDE AND INSTALL NECESSARY WIRES IN SURFACE MOUNT 3/4" (MINIMUM) CONDUIT FOR FOR ELECTRICAL FIXTURE ARRANGEMENT AS SHOWN. MAXIMUM 3 CIRCUITS PER CONDUIT SECTION OVER 24" IN LENGTH. CONDUITS SHALL NOT EXCEED 40% FILL.
3. CONDUITS UNDER SLAB SHALL BE PVC-40 WITH STUB-OUTS PER EXPOSED CONDUIT TRANSITION DETAIL.
4. CONDUITS ABOVE CEILING SHALL BE EMT WITH COMPRESSION STYLE FITTINGS. CONDUITS BELOW CEILING SHALL BE GRS. ACCESS TO ATTIC AREA SHALL NOT BE REQUIRED TO INSTALL CONDUCTORS.
5. DEVICE BOXES AND CONDUIT BODIES SHALL BE CAST IRON OR ALUMINUM WITH THREADED HUB.
6. CONDUCTORS SHALL BE COPPER TYPE THHN, CLASS C STRANDING, #12 AWG (MINIMUM). SIZED PER NEC BY CIRCUIT AMPACITY.
7. MOUNT CONDUITS USING SINGLE BOLT GALVANIZED PIPE STRAPS AND CLAMP BACK SPACERS.
8. USE SS EXPANSION WEDGE ANCHORS OR EPOXY ANCHORS AS NECESSARY FOR EQUIPMENT MOUNTING.
9. EXPOSED CONDUIT SHALL BE PAINTED WITH WALL AND/OR CEILING AS SPECIFIED.
10. PROVIDE AND INSTALL FIXTURES PER SCHEDULE THIS PAGE, QUANTITY AS SHOWN IN DRAWINGS.
11. PROVIDE AND INSTALL ALL DEVICE BOXES, JUNCTION BOXES, RECEPTACLES, SWITCHES, AND COVERS MOUNT ALL RECEPTACLES AT 48" AFF UNLESS OTHERWISE NOTED.
12. RECEPTACLES TO BE GROUND FAULT INTERRUPTER (GFI) TYPE AND WEATHERPROOF (WP) WHERE SHOWN.
13. SEE ELECTRICAL SYMBOLS AND ABBREVIATIONS DRAWING FOR SYMBOL DEFINITION.
14. ALL WORK SHALL CONFORM TO LOCAL CODES AND NATIONAL ELECTRIC CODE.
15. SWITCH TYPE: T= TIME SWITCH, M= MOTION DETECTOR, 3= 3-WAY.

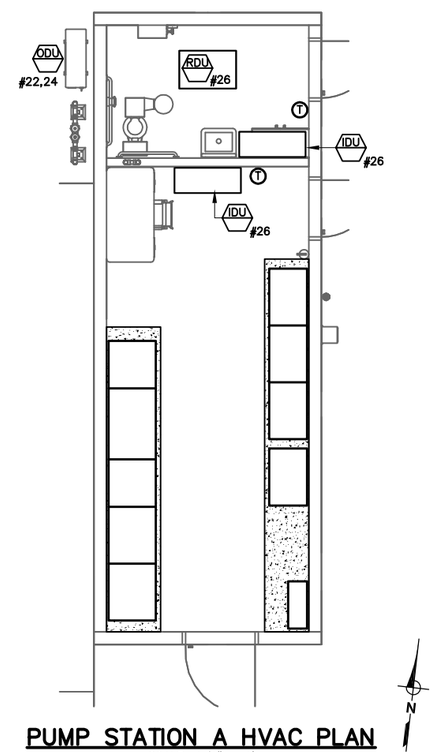

PUMP STATION A HVAC PLAN

SCALE: 1/4" = 1'

0 4 8 (Approximate Scale in Feet)

NOTES:

ADD THE PREFIX 10 TO COMPLETE INSTRUMENT OR EQUIPMENT TAG REFFERENCE ON THIS SHEET.
EXAMPLE: P-10101 FOR PUMP 1

REGISTERED PROFESSIONAL ENGINEER THOMAS P. FRISCH No. E15761 ELECTRICAL STATE OF CALIFORNIA

05/27/2020

DESIGN T. FRISCH
DRAWN N. CONANT
CHECKED M. FRISCH
APPROVED M. FISHER

FRISCH ENGINEERING, INC.
CONSULTING ELECTRICAL ENGINEERS
3405 FOLSOM BLVD, UNIT 600
SACRAMENTO, CA 95816
PH 916 353 1025
WWW.FRISCHENGINEERING.COM
FILE: 17-082-E10-04.DWG
DATE: MAY 29, 2020 TIME: 2:03:41 PM

WATERWORKS ENGINEERS
2260 Douglas Blvd, Suite 150 • Roseville, CA 95661 • 916-780-2888

CITY OF MORRO BAY
WATER RECLAMATION FACILITY
LIFT STATON AND OFFSITE PIPELINES

ELECTRICAL
PUMP STATION A
LIGHTING AND RECEPTACLE PLAN

DATE MAY 2020
PROJECT NUMBER 17-082
DRAWING NUMBER 10-E-04
SHEET NUMBER 195

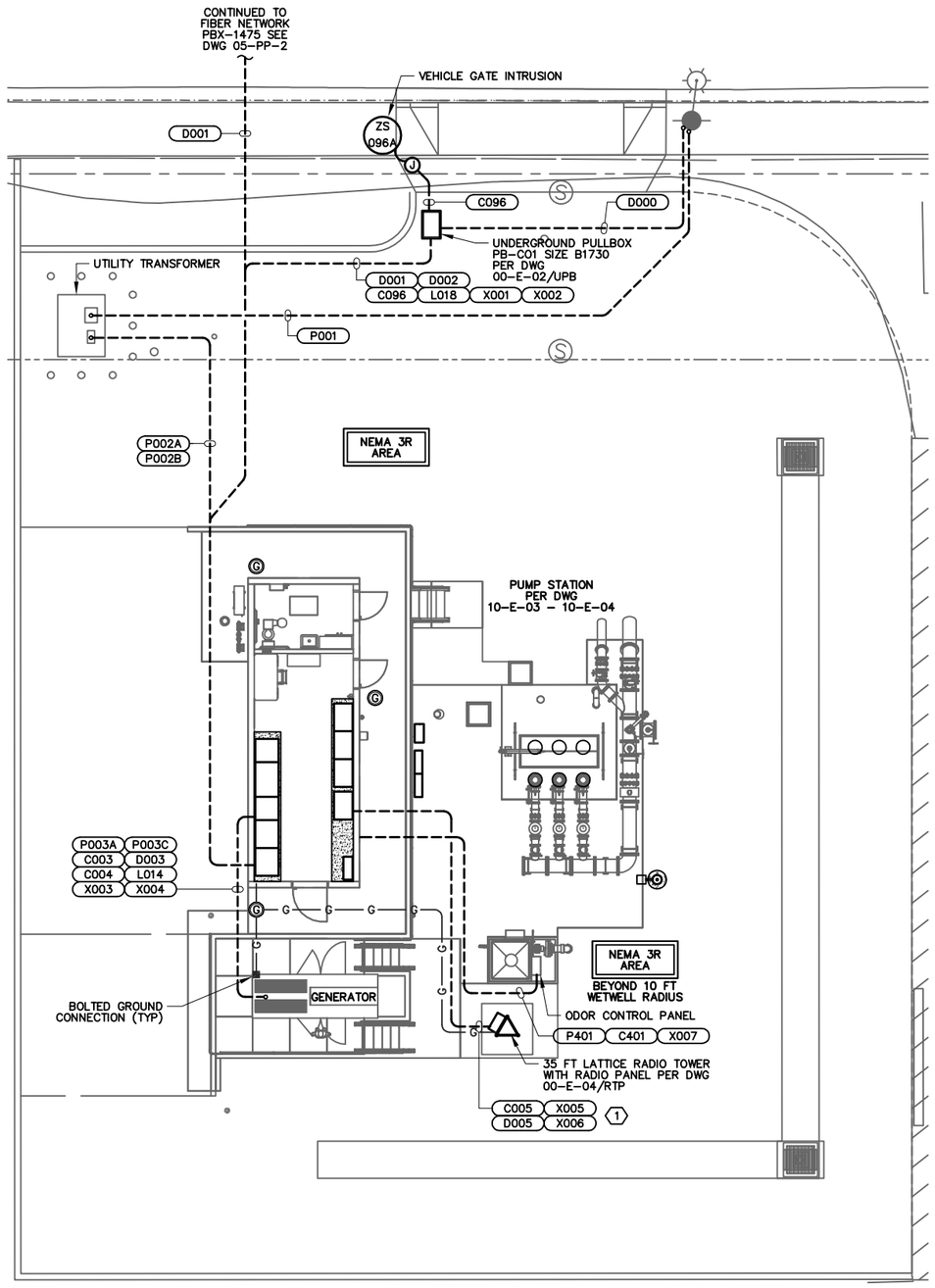

PUMP STATION A ELECTRICAL SITE PLAN

SCALE: 1/8" = 1'

0 8 16
(Approximate Scale In Feet)

N

ELECTRICAL PLAN NOTES:

1. SEE ELECTRICAL SYMBOLS AND ABBREVIATIONS DRAWING FOR SYMBOL DEFINITION.
2. ALL WORK SHALL CONFORM TO LOCAL CODES AND NATIONAL ELECTRIC CODE.
3. SITEPLAN ACCURATE FOR ELECTRICAL WORK ONLY. COORDINATE WITH OTHER DISCIPLINES.
4. CONFIRM HOOKUP REQUIREMENTS FOR ELECTRICAL AND MECHANICAL EQUIPMENT PRIOR TO INSTALLING UNDERGROUND CONDUIT AND STUB-UPS. MISSING CONDUITS, INCORRECT SIZING, OR OTHER ISSUES MUST BE BROUGHT TO THE ATTENTION OF ENGINEER PRIOR TO BACKFILL.
5. CONDUIT ROUTING IS SHOWN GENERALLY DIAGRAMMATIC AND DOES NOT INDICATE TRENCH WIDTH OR TRENCH LAYOUT. FOR CONDUITS OUTSIDE BUILDINGS, IF CONTRACTOR WANTS TO RUN CONDUITS IN ROUTES OTHER THAN THOSE SHOWN FOR ANY REASON, THEN HE SHALL SUBMIT THE PLAN FOR APPROVAL PRIOR TO INSTALLATION. SPECIFY REASON FOR CHANGE.
6. INSTALL NON-UTILITY CONDUITS PER DRAWING DETAILS AND SPECIFICATIONS SECTION 16110.
7. CONDUITS SIZE, TYPE AND FILL DEFINED BY TAG NAME IN CONDUIT AND WIRE ROUTING SCHEDULE.
8. INSTALL UNDERGROUND NON-DUCTBANK CONDUITS PER ELECTRICAL DETAIL LVC.
9. CONDUIT TRANSITIONS SHALL BE PER EXPOSED CONDUIT TRANSITION DETAIL ECT.
10. EXPOSED CONDUIT TYPE AND FITTINGS TO BE USED ABOVE TRANSITION SHALL BE PER AREA CLASSIFICATION DEFINED IN CONDUIT SPECIFICATIONS AND EQUIPMENT SPECIFIC DETAIL.
11. REPAIR SURFACE TO PREVIOUS CONDITION FOR ALL UNDERGROUND CONDUIT ROUTES. GROUT, CAULK, AND PAINT ANY PENETRATIONS INTO STRUCTURES FOR WATERTIGHT SEAL.
12. USE SS EXPANSION WEDGE ANCHORS OR EPOXY ANCHORS AS NECESSARY FOR EQUIPMENT MOUNTING.
13. RECEPTACLES TO BE GROUND FAULT INTERRUPTER (GFI) TYPE AND WEATHERPROOF (WP) OUTDOORS AND WHERE SHOWN.
14. STUB UP CONDUITS BENEATH GENERATOR FRAME PER MANUFACTURER RECOMMENDATIONS. USE FLEXIBLE CONDUIT FOR TRANSITION BETWEEN EXPOSED CONDUIT TRANSTION AND ELECTRICAL CONNECTION BOX AND GENERATOR CONTROL PANEL.
15. UTILITY PRIMARY AND SECONDARY CONDUITS, TRANSFORMER PAD, PULL BOXES AND REMOVABLE BOLLARDS SHALL BE INSTALLED PER POWER UTILITY ENGINEERED DRAWINGS AND STANDARDS.
16. ASSUME 100 FT OF UNDERGROUND RUN BEYOND DRAWING FOR UTILITY CONNECTIONS. CONNECTION POINT SHALL BE AS DETERMINED BY UTILITY.

DRAWING REFERENCED NOTES:

(1) PROVIDE 45° CONDUIT SWEEPS TO RADIO TOWER.

NOTES:

ADD THE PREFIX 10 TO COMPLETE INSTRUMENT OR EQUIPMENT TAG REFFERENCE ON THIS SHEET.
EXAMPLE: P-10101 FOR PUMP 1

REGISTERED PROFESSIONAL ENGINEER
THOMAS P. FRISCH
No. E15761
ELECTRICAL
STATE OF CALIFORNIA
05/27/2020

DESIGN T. FRISCH
DRAWN N. CONANT
CHECKED M. FRISCH
APPROVED M. FISHER

FRISCH ENGINEERING, INC.
CONSULTING ELECTRICAL ENGINEERS
13405 FOLSOM BLVD, UNIT 600
FOLSOM, CA 95630
PH 916 353 1025
WWW.FRISCHENGINEERING.COM
CLIENT # 12944
PROJECT # 1703
DATE: MAY 28, 2020 TIME: 11:04:35AM

WATERWORKS ENGINEERS
2260 Douglas Blvd, Suite 150 • Roseville, CA 95661 • 916-780-2888

CITY OF MORRO BAY
WATER RECLAMATION FACILITY
LIFT STATON AND OFFSITE PIPELINES

ELECTRICAL
PUMP STATION A
ELECTRICAL SITE PLAN

DATE MAY 2020
PROJECT NUMBER 17-082
DRAWING NUMBER 10-E-05
SHEET NUMBER 196

CONDUIT & WIRE ROUTING SCHEDULE

REV	CONDUIT DETAILS TAG NO.	FROM	TO	QTY	SIZE	TYPE	POWER WIRE QTY	POWER WIRE SIZE	CONTROL WIRE QTY	CONTROL WIRE SIZE	GROUND SIZE	NOTES
	A002	CONTROL PANEL	SWITCHBOARD	1	3/4"	SPEC	–	–	–	–	–	PULL ROPE
	A011	CONTROL PANEL	PUMP 1 VFD	1	1-1/2"	SPEC	–	–	3	#18 TSPR	#14	
	A021	CONTROL PANEL	PUMP 2 VFD	1	1-1/2"	SPEC	–	–	3	#18 TSPR	#14	
	A031	CONTROL PANEL	PUMP 3 VFD	1	1-1/2"	SPEC	–	–	3	#18 TSPR	#14	
	A051 A	CONTROL PANEL	INSTRUMENT JUNCTION BOX	1	3/4"	SPEC	–	–	1	#18 TSPR	#14	
	A051 B	INSTRUMENT JUNCTION BOX	LEVEL TRANSMITTER LT-051	1	1"	SPEC	–	–	1	MFG CABLE	–	
	A053A	CONTROL PANEL	INSTRUMENT JUNCTION BOX	1	3/4"	SPEC	–	–	1	#18 TSPR	#14	
	A053B	INSTRUMENT JUNCTION BOX	BACK-UP LEVEL TRANSMITTER LT-053	1	1"	SPEC	–	–	1	MFG CABLE	–	
	A061	CONTROL PANEL	PRESSURE TRANSMITTER PIT-061	1	3/4"	SPEC	–	–	1	#18 TSPR	#14	
	A071	CONTROL PANEL	FLOWMETER FIT-071	1	3/4"	SPEC	–	–	1	#18 TSPR	#14	
	A082	CONTROL PANEL	BUILDING TEMP TIT-082	1	3/4"	SPEC	–	–	1	#18 TSPR	#14	
	C002	CONTROL PANEL	SWITCHBOARD	1	1"	SPEC	–	–	12	#14	#14	
	C003	CONTROL PANEL	GENERATOR	1	1"	SPEC	–	–	6	#14	#14	
	C004	ATS	GENERATOR	1	3/4"	SPEC	–	–	4	#14	#14	
	C005	CONTROL PANEL	RADIO ANTENNA POLE	1	3/4"	SPEC	2	#12	–	–	#12	
	C006	CONTROL PANEL	COMMUNICATION PANEL	1	1"	SPEC	–	–	4	#14	#12	
	C011	CONTROL PANEL	PUMP 1 VFD	1	1-1/2"	SPEC	–	–	20	#14	#14	
	C021	CONTROL PANEL	PUMP 2 VFD	1	1-1/2"	SPEC	–	–	20	#14	#14	
	C031	CONTROL PANEL	PUMP 3 VFD	1	1-1/2"	SPEC	–	–	20	#14	#14	
	C051	CONTROL PANEL	INSTRUMENT JUNCTION BOX	1	3/4"	SPEC	–	–	4	#14	#12	
	C052A	CONTROL PANEL	INSTRUMENT JUNCTION BOX	1	3/4"	SPEC	–	–	6	#14	#14	
	C052B	INSTRUMENT JUNCTION BOX	LEVEL SWITCHES LSH-052, LSL-052	1	1"	SPEC	–	–	4	#14	#14	
	C071	CONTROL PANEL	FLOWMETER FIT-071	1	3/4"	SPEC	–	–	2	#14	#10	
	C093	CONTROL PANEL	BUILDING INTRUSION ZS-093A, ZS-093B	1	3/4"	SPEC	–	–	4	#14	#14	
	C096	VEHICLE GATE INTRUSION	CONTROL PANEL	1	3/4"	SPEC	–	–	2	#14	#14	VIA PB-C01
	C098	CONTROL PANEL	SMOKE ALARM	1	3/4"	SPEC	–	–	4	#14	#14	
	C101	PUMP 1 VFD	SUMP TERMINATION PANEL	1	3/4"	SPEC	–	–	1	#18 TSPR	#14	
	C106	CONTROL PANEL	MV-106	1	1"	SPEC	–	–	10	#14	#14	
	C107	CONTROL PANEL	MV-107	1	1"	SPEC	–	–	10	#14	#14	
	C161	PUMP 1 VFD	PUMP 1 HIGH PRESSURE PSH-161	1	3/4"	SPEC	–	–	2	#14	#14	
	C162	PUMP 2 VFD	PUMP 2 HIGH PRESSURE PSH-162	1	3/4"	SPEC	–	–	2	#14	#14	
	C163	PUMP 3 VFD	PUMP 3 HIGH PRESSURE PSH-163	1	3/4"	SPEC	–	–	2	#14	#14	
	C201	PUMP 2 VFD	SUMP TERMINATION PANEL	1	3/4"	SPEC	–	–	1	#18 TSPR	#14	
	C301	PUMP 3 VFD	SUMP TERMINATION PANEL	1	3/4"	SPEC	–	–	1	#18 TSPR	#14	
	C401	CONTROL PANEL	ODOR CONTROL PANEL	1	1"	SPEC	–	–	6	#14	#14	
	D000	TEL-CO UTILITY	PB-C01	1	2"	SPEC	–	–	–	–	–	PULL ROPE
	D001	FIBER NETWORK	COMMUNICATION PANEL	1	4"	SPEC	–	–	2	FO CABLE	–	
	D002	PB-C01	COMMUNICATION PANEL	1	3/4"	SPEC	–	–	–	–	–	PULL ROPE
	D003	CONTROL PANEL	GENERATOR	1	3/4"	SPEC	–	–	–	–	–	PULL ROPE
	D004	CONTROL PANEL	SWITCHBOARD	1	3/4"	SPEC	–	–	1	CAT 6	–	BELDEN 7919A
	D005	CONTROL PANEL	RADIO ANTENNA POLE	1	2"	SPEC	–	–	1	ANTENNA CABLE	–	GRS ABOVE GRADE
	D006	COMMUNICATION PANEL	CONTROL PANEL	1	3/4"	SPEC	–	–	4	CAT 6	#14	
	D007	COMMUNICATION PANEL	CONTROL PANEL	1	1"	SPEC	–	–	1	FO CABLE	–	PATCH CORD
	D010	COMMUNICATION PANEL	SCADA TERMINAL	1	3/4"	SPEC	–	–	2	CAT 6	#14	
	D011	CONTROL PANEL	PUMP 1 VFD	1	3/4"	SPEC	–	–	2	CAT 6	#14	
	D021	CONTROL PANEL	PUMP 2 VFD	1	3/4"	SPEC	–	–	2	CAT 6	#14	
	D031	CONTROL PANEL	PUMP 3 VFD	1	3/4"	SPEC	–	–	2	CAT 6	#14	

NOTES PERTAINING TO CONDUIT SCHEDULE:

1. CONDUIT TYPE "SPEC" IS AS DEFINED IN SPECIFICATIONS SECTION 16110 FOR NON-EXPOSED AND EXPOSED PORTIONS OF CONDUIT RUN.
2. SEE SPECIFICATIONS AND EXPOSED TRANSITION DETAIL OR EQUIPMENT SPECIFIC DETAIL FOR CONDUIT TRANSITION MATERIALS AND METHODS FROM BELOW GROUND TO EXPOSED PORTIONS OF RUN.
3. CONDUITS OVER 15 FT LENGTH (EITHER EMPTY OR WITH CONDUCTORS SIZED LESS THAN #8 AWG), SHALL INCLUDE A POLY PULL STRING. STRING SHALL BE TIED OFF AT EACH END.
4. FITTINGS, CONDULETS, BOXES AND COVERS SHALL MATCH DUTY OF ADJACENT PIPE, SEE SPECIFICATIONS 16110.
5. WIRE SIZING IN TABLE IS BASED ON COPPER CONDUCTORS, THHN INSULATION, WITH TYPE C STRANDING. OTHER CONDUCTOR TYPES, IF ALLOWED OR REQUIRED PER SPECIFICATION, MAY REQUIRE CONDUITS TO BE UPSIZED BY CONTRACTOR AND SUBMITTED FOR APPROVAL.
6. SEE GENERAL NOTES ON LIGHTING AND RECEPTACLE PLAN FOR CONDUIT REQUIREMENTS FOR ELECTRICAL DEVICES WITHOUT CONDUITS SHOWN, CONDUIT NUMBERS, OR NOT LISTED IN SCHEDULE.

REGISTERED PROFESSIONAL ENGINEER
THOMAS P. FRISCH
No. E15761
ELECTRICAL
STATE OF CALIFORNIA
05/27/2020

DESIGN T. FRISCH
DRAWN N. CONANT
CHECKED M. FRISCH
APPROVED M. FISHER

FRISCH ENGINEERING, INC.
CONSULTING ELECTRICAL ENGINEERS
13405 FOLSOM BLVD, UNIT 600
FOLSOM, CA 95630
PH 916 353 1025
WWW.FRISCHENGINEERING.COM
FILE: 17-082-WWS-10-06.DWG
DATE: MAY 28, 2020 TIME: 4:34:18PM

WATERWORKS ENGINEERS
2260 Douglas Blvd, Suite 150 • Roseville, CA 95661 • 916-780-6888

CITY OF MORRO BAY
WATER RECLAMATION FACILITY
LIFT STATON AND OFFSITE PIPELINES

ELECTRICAL
PUMP STATION A
CONDUIT SCHEDULE 1

DATE MAY 2020
PROJECT NUMBER 17-082
DRAWING NUMBER 10-E-06
SHEET NUMBER 197

CONDUIT & WIRE ROUTING SCHEDULE

REV	CONDUIT DETAILS TAG NO.	FROM	TO	QTY	SIZE	TYPE	POWER WIRE QTY	POWER WIRE SIZE	CONTROL WIRE QTY	CONTROL WIRE SIZE	GROUND SIZE	NOTES
	L002	PANEL LP	CONTROL PANEL	1	3/4"	SPEC	4	#12	–	–	#12	
	L005	PANEL LP	AREA POLE LIGHT	1	3/4"	SPEC	2	#12	–	–	#12	
	L006	PANEL LP	COMMUNICATION PANEL	1	3/4"	SPEC	2	#12	–	–	#12	
	L014	PANEL LP	GENERATOR	1	1"	SPEC	6	#12	–	–	#12	
	L018	PANEL LP	PB–C01	1	3/4"	SPEC	2	#12	–	–	#12	
	P001	UTILITY POLE	UTILITY TRANSFORMER	1	4"	SPEC	–	–	–	–	–	PER UTILITY REQUIREMENTS
	P002A,B	UTILITY TRANSFORMER	METER/MAIN	2	5"	SPEC	–	–	–	–	–	PER UTILITY REQUIREMENTS
	P003A,B	GENERATOR	ATS	2	4"	SPEC	3	#350	–	–	#0	
	P011	SWITCHBOARD	PUMP 1 VFD	1	1–1/2"	SPEC	3	#2	–	–	#6	
	P021	SWITCHBOARD	PUMP 2 VFD	1	1–1/2"	SPEC	3	#2	–	–	#6	
	P031	SWITCHBOARD	PUMP 3 VFD	1	1–1/2"	SPEC	3	#2	–	–	#6	
	P101	PUMP 1 VFD	SUMP TERMINATION PANEL	1	3"	SPEC	3	#2	–	–	#6	VFD CABLE
	P102	SUMP TERMINATION PANEL	PUMP 1	1	4"	SPEC	1	MFG CABLE	–	–	#6	
	P106	SWITCHBOARD	MV–106	1	1"	SPEC	3	#12	–	–	#12	
	P107	SWITCHBOARD	MV–107	1	1"	SPEC	3	#12	–	–	#12	
	P201	PUMP 2 VFD	SUMP TERMINATION PANEL	1	3"	SPEC	3	#2	–	–	#6	VFD CABLE
	P202	SUMP TERMINATION PANEL	PUMP 2	1	4"	SPEC	1	MFG CABLE	–	–	#6	
	P301	PUMP 3 VFD	SUMP TERMINATION PANEL	1	3"	SPEC	3	#2	–	–	#6	VFD CABLE
	P302	SUMP TERMINATION PANEL	PUMP 3	1	4"	SPEC	1	MFG CABLE	–	–	#6	
	P401	ODOR CONTROL STARTER	ODOR CONTROL PANEL	1	1"	SPEC	3	#12	–	–	#12	
	X001	CONTROL PANEL	PB–C01	1	1"	SPEC	–	–	–	–	–	PULL ROPE
	X002	PANEL LP	PB–C01	1	1"	SPEC	–	–	–	–	–	PULL ROPE
	X003	CONTROL PANEL	GENERATOR	1	1"	SPEC	–	–	–	–	–	PULL ROPE
	X004	PANEL LP	GENERATOR	1	1"	SPEC	–	–	–	–	–	PULL ROPE
	X005	CONTROL PANEL	RADIO ANTENNA POLE	1	2"	SPEC	–	–	–	–	–	PULL ROPE
	X006	PANEL LP	RADIO ANTENNA POLE	1	1"	SPEC	–	–	–	–	–	PULL ROPE
	X007	ODOR CONTROL STARTER	ODOR CONTROL SYSTEM	1	1"	SPEC	–	–	–	–	–	PULL ROPE
	X011	CONTROL PANEL	PUMP 1 VFD	1	1"	SPEC	–	–	–	–	–	PULL ROPE
	X012	SWITCHBOARD	PUMP 1 VFD	1	1"	SPEC	–	–	–	–	–	PULL ROPE
	X021	CONTROL PANEL	PUMP 2 VFD	1	1"	SPEC	–	–	–	–	–	PULL ROPE
	X022	SWITCHBOARD	PUMP 2 VFD	1	1"	SPEC	–	–	–	–	–	PULL ROPE
	X031	CONTROL PANEL	PUMP 3 VFD	1	1"	SPEC	–	–	–	–	–	PULL ROPE
	X032	SWITCHBOARD	PUMP 3 VFD	1	1"	SPEC	–	–	–	–	–	PULL ROPE
	X052	CONTROL PANEL	INSTRUMENT JUNCTION BOX	1	1"	SPEC	–	–	–	–	–	PULL ROPE
	X053	INSTRUMENT JUNCTION BOX	WETWELL	1	1"	SPEC	–	–	–	–	–	PULL ROPE
	X101	PUMP 1 VFD	SUMP TERMINATION PANEL	1	1"	SPEC	–	–	–	–	–	PULL ROPE
	X102	SUMP TERMINATION PANEL	WETWELL	1	1"	SPEC	–	–	–	–	–	PULL ROPE
	X201	PUMP 2 VFD	SUMP TERMINATION PANEL	1	1"	SPEC	–	–	–	–	–	PULL ROPE
	X202	SUMP TERMINATION PANEL	WETWELL	1	1"	SPEC	–	–	–	–	–	PULL ROPE
	X301	PUMP 3 VFD	SUMP TERMINATION PANEL	1	1"	SPEC	–	–	–	–	–	PULL ROPE
	X302	SUMP TERMINATION PANEL	WETWELL	1	1"	SPEC	–	–	–	–	–	PULL ROPE

NOTES PERTAINING TO CONDUIT SCHEDULE:

1. CONDUIT TYPE "SPEC" IS AS DEFINED IN SPECIFICATIONS SECTION 16110 FOR NON–EXPOSED AND EXPOSED PORTIONS OF CONDUIT RUN.
2. SEE SPECIFICATIONS AND EXPOSED TRANSITION DETAIL OR EQUIPMENT SPECIFIC DETAIL FOR CONDUIT TRANSITION MATERIALS AND METHODS FROM BELOW GROUND TO EXPOSED PORTIONS OF RUN.
3. CONDUITS OVER 15 FT LENGTH (EITHER EMPTY OR WITH CONDUCTORS SIZED LESS THAN #8 AWG), SHALL INCLUDE A POLY PULL STRING. STRING SHALL BE TIED OFF AT EACH END.
4. FITTINGS, CONDULETS, BOXES AND COVERS SHALL MATCH DUTY OF ADJACENT PIPE, SEE SPECIFICATIONS 16110.
5. WIRE SIZING IN TABLE IS BASED ON COPPER CONDUCTORS, THHN INSULATION, WITH TYPE C STRANDING. OTHER CONDUCTOR TYPES, IF ALLOWED OR REQUIRED PER SPECIFICATION, MAY REQUIRE CONDUITS TO BE UPSIZED BY CONTRACTOR AND SUBMITTED FOR APPROVAL.
6. SEE GENERAL NOTES ON LIGHTING AND RECEPTACLE PLAN FOR CONDUIT REQUIREMENTS FOR ELECTRICAL DEVICES WITHOUT CONDUITS SHOWN, CONDUIT NUMBERS, OR NOT LISTED IN SCHEDULE.

REGISTERED PROFESSIONAL ENGINEER
THOMAS P. FRISCH
No. E15761
ELECTRICAL
STATE OF CALIFORNIA
05/27/2020

DESIGN T. FRISCH
DRAWN N. CONANT
CHECKED M. FRISCH
APPROVED M. FISHER

FRISCH ENGINEERING, INC.
CONSULTING ELECTRICAL ENGINEERS
13405 FOLSOM BLVD, UNIT 600
FOLSOM, CA 95630
PH 916 353 1025
WWW.FRISCHENGINEERING.COM
FILE: 17-082-E-07 - DWG - 07-01-2020
DATE: MAY 28, 2020 TIME: 7:11:41:42PM

WATERWORKS ENGINEERS
2260 Douglas Blvd. Suite 150 • Roseville, CA 95661 • 916-780-2888

CITY OF MORRO BAY
WATER RECLAMATION FACILITY
LIFT STATON AND OFFSITE PIPELINES

ELECTRICAL
PUMP STATION A
CONDUIT SCHEDULE 2

DATE MAY 2020
PROJECT NUMBER 17-082
DRAWING NUMBER 10-E-07
SHEET NUMBER 198

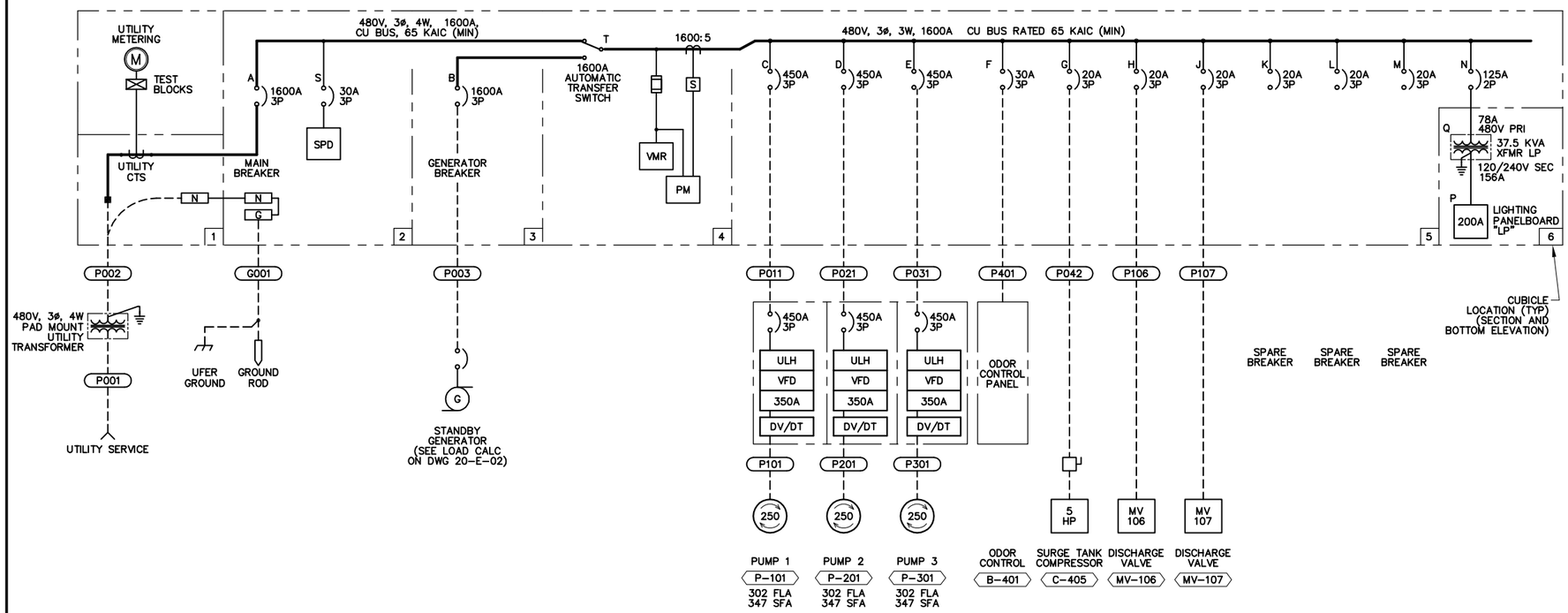

ONE-LINE DIAGRAM

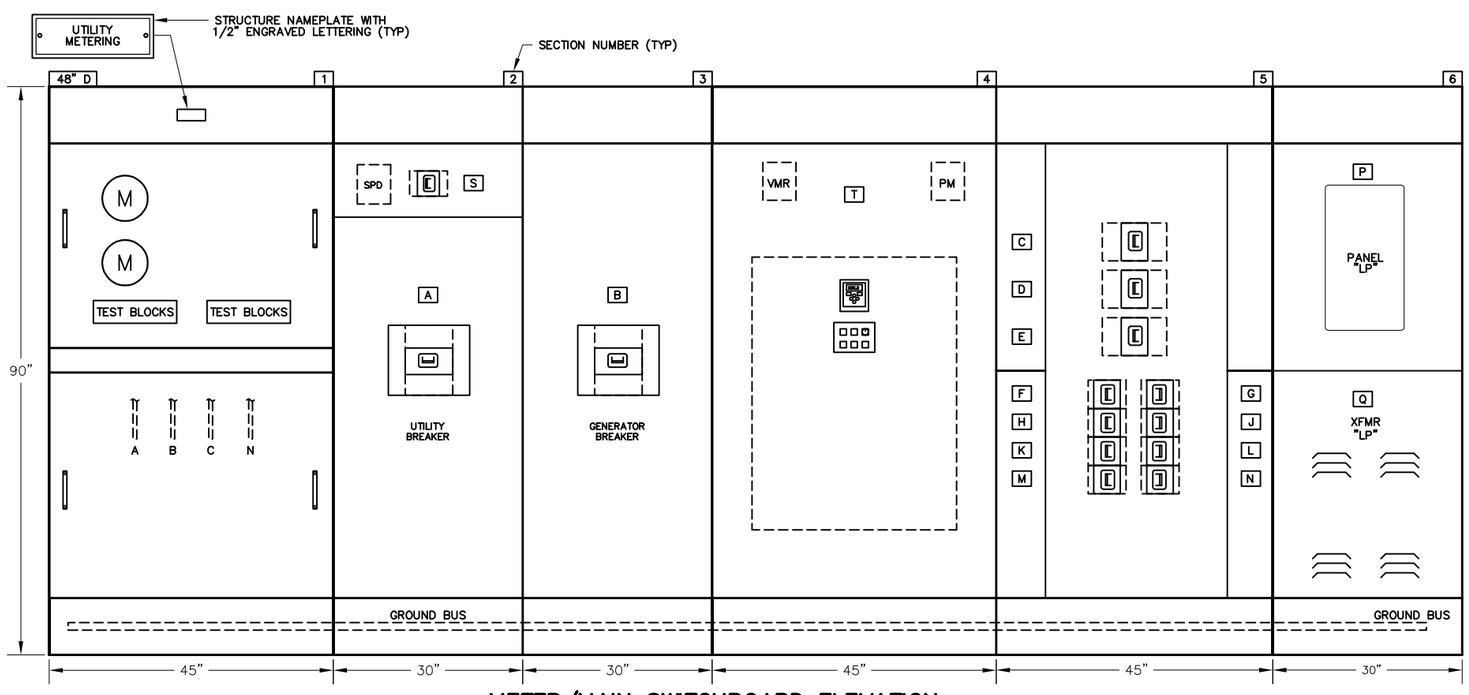

METER/MAIN SWITCHBOARD ELEVATION

NEMA 1, INDOOR

GENERAL NOTES:

1. REAR ACCESS SHALL NOT BE REQUIRED TO SERVICE OR REPLACE SWITCHBOARD COMPONENTS.
2. EACH BREAKER SHALL HAVE A PADLOCKABLE HASP TO LOCK BREAKER IN THE OFF POSITION.
3. ALL DIMENSIONS ARE APPROXIMATE. ACTUAL DIMENSIONS SHALL BE PER MANUFACTURER APPROVED IN SUBMITTAL.
4. FURNISH AND APPLY ENGRAVED WHITE LETTERING ON BLACK PLASTIC NAMEPLATES FOR DEVICES AND BREAKERS WHERE NOTED, AT MINIMUM, WITH A LETTERED BOX. TEXT HEIGHT SHALL BE 1/4 INCH MINIMUM. REFRENCE ONE-LINE DIAGRAM FOR LABEL.
5. FURNISH CODE REQURIED WARNING LABELS AND EQUIPMENT RATINGS LABELS.

NOTES:

ADD THE PREFIX 20 TO COMPLETE CONDUIT, INSTRUMENT OR EQUIPMENT TAG REFFERENCE ON THIS SHEET.

REGISTERED PROFESSIONAL ENGINEER THOMAS P. FRISCH No. E15761 ELECTRICAL STATE OF CALIFORNIA

05/27/2020

DESIGN T. FRISCH
DRAWN N. CONANT
CHECKED M. FRISCH
APPROVED M. FISHER

FRISCH ENGINEERING, INC.
CONSULTING ELECTRICAL ENGINEERS
13405 FOLSOM BLVD, UNIT 600
FOLSOM, CA 95630
PH 916 353 1025
WWW.FRISCHENGINEERING.COM
FILE: 17-082-20-E-01.DWG
DATE: MAY 28, 2020 TIME: 11:05:43AM

WATERWORKS ENGINEERS
2260 Douglas Blvd. Suite 150 • Roseville, CA 95661 • 916-780-2888

CITY OF MORRO BAY
WATER RECLAMATION FACILITY
LIFT STATON AND OFFSITE PIPELINES

ELECTRICAL
PUMP STATION B METER/MAIN ONE-LINE AND ELEVATION

DATE MAY 2020
PROJECT NUMBER 17-082
DRAWING NUMBER 20-E-01
SHEET NUMBER 199

PANEL "LP"

LOCATION:SWBD SECTION
ENCLOSURE:NEMA 1A
AIC RATING:10 KAIC

120/ 240 VOLTS, 1 PHASE, 3 WIRE
200 AMP BUS
200 AMP MAIN BREAKER

BKR NO.	DESCRIPTION	LOAD VA	LINE	AMPS	AMPS/ POLE	BKR NO.	BKR NO.	AMPS/ POLE	LINE	AMPS	LOAD VA	DESCRIPTION	BKR NO.
1	LIGHTING ELECTRICAL ROOM	336	2.8		20/1	1	2	20/1	5.0		600	CONTROL PANEL	2
3	LIGHTING OUTDOORS	304		2.5	20/1	3	4	20/1		2.5	300	CONTROL PANEL AUXILLIARY	4
5	POLE LIGHT	600	5.0		20/1	5	6	20/1	2.5		300	COMMUNICATION PANEL	6
7	RECEPTACLE ELECTRICAL ROOM	900		7.5	20/1	7	8	20/1		0.0	0	SPARE	8
9	RECEPTACLE ELECTRICAL ROOM	900	7.5		20/1	9	10	15/1	2.5		300	VFD MAS RELAY PANEL	10
11	RECEPTACLE OUTDOOR	1200		10.0	20/1	11	12	20/1		15.0	1800	GENERATOR BATTERY CHARGER	12
13	SPARE	0	0.0		20/1	13	14	40/2	16.7		2000	GENERATOR HEATER	14
15	SPARE	0		0.0	20/1	15	16			16.7	2000		16
17	SPARE	0	0.0		20/1	17	18	20/1	12.5		1500	VEHICLE GATE	18
19	SPARE	0		0.0	20/1	19	20	20/1		0.0	0	SPARE	20
21	SPARE	0	0.0		20/1	21	22	40/2	25.0		3000	HVAC UNIT 1 OUTDOOR	22
23	SPARE	0		0.0	20/1	23	24			25.0	3000		24
25	SPARE	0	0.0		20/1	25	26	15/1	0.6		75	HVAC UNIT 1 INDOOR	26
27	SPACE	0		0.0		27	28	40/2		25.0	3000	HVAC UNIT 2 OUTDOOR	28
29	SPACE	0	0.0			29	30		25.0		3000		30
31	SPACE	0		0.0		31	32	15/1		0.6	75	HVAC UNIT 2 INDOOR	32
33	SPACE	0	0.0			33	34		0.0		0	SPACE	34
35	SPACE	0		0.0		35	36			0.0	0	SPACE	36
37	SPACE	0	0.0			37	38		0.0		0	SPACE	38
39	SPACE	0		0.0		39	40			0.0	0	SPACE	40
41	SPACE	0	0.0			41	42		0.0		0	SPACE	42

PHASE	A	B
LEFT SIDE AMPS	15.30	20.03
LEFT SIDE KVA	1.84	2.40
TOTAL PHASE KVA	12.61	12.58
TOTAL PHASE AMPS	105	105
% OF AVERAGE	100	100

NEUTRAL

GROUND

A	B	PHASE
89.79	84.79	RIGHT SIDE AMPS
10.78	10.18	RIGHT SIDE KVA
25.19		TOTAL KVA
104.96		TOTAL AMPS @ 240V, 1P
0.80		DIVERSITY FACTOR
20.15		LOAD KVA

NOTES:
1 MEANS OF WIRE COLOR CODING SHALL BE POSTED ON PANELBOARD PER NEC 210 (4)
2 ASTERISK (*) DENOTES GFI BREAKER REQUIRED WITH 5 MA SENSITIVITY
3 TILDA (~) DENOTES GFI BREAKER REQUIRED WITH 30 MA SENSITIVITY

LOAD CALCULATIONS

LOAD DESCRIPTION		CONNECTED LOAD LOAD	QTY	TOTAL	DEMAND LOAD LOAD	QTY	TOTAL	GENERATOR LOAD LOAD	QTY	TOTAL
250HP PUMP		325.00 A	3	810599.8 VA	325.00 A	2	540399.9 VA	325.00 A	2	540399.9 VA
5HP SURGE TANK SYSTEM		7.60 A	1	6318.5 VA	7.60 A	1	6318.5 VA	7.60 A	1	6318.5 VA
1HP MOTORIZED VALVE		2.10 A	2	3491.8 VA	2.10 A	1	1745.9 VA	2.10 A	1	1745.9 VA
1HP ODOR CONTROL		2.10 A	1	1745.9 VA	2.10 A	1	1745.9 VA	2.10 A	1	1745.9 VA
PANELBOARD LP	120/240	30.30 A	1	25190.0 VA	24.24 A	1	20152.0 VA	24.24 A	1	20152.0 VA
	TOTAL LOAD =	1019.20 A	<	847346.0 VA	686.04 A	<	570362.2 VA	686.04 A	<	570362.2 VA

LOAD CORRECTION FACTORS

LARGEST MOTOR LOAD x 25%
250HP HP => 0.25 x 270199.9 VA = 81.25 A 67550.0 VA 81.25 A 67550.0 VA
80% BREAKER DERATING = TOTAL x 0.25 = 275.11 A 228724.0 VA 191.82 A 159478.0 VA
FOR CONTINUOUS LOADS NEC 210-20
SERVICE SIZE (MIN) = 1375.56 A 1143620.0VA 959.11 A 797390.2VA
UTILITY SERVICE SIZE REQUIRED = 1600 AMP
480V, 3 PHASE, 4 WIRE

GENERATOR SIZE
NAMEPLATE = 1000 KW 1250 KVA
@ TEMP OF 100 deg F
ELEVATION OF 200 FT ASL
DERATED SIZE = 977.0 KW 1221.3 KVA
AMPERAGE = 1469 A @ 0.8 PF
UTLIZATION % = 53 % @ 0.90 PF

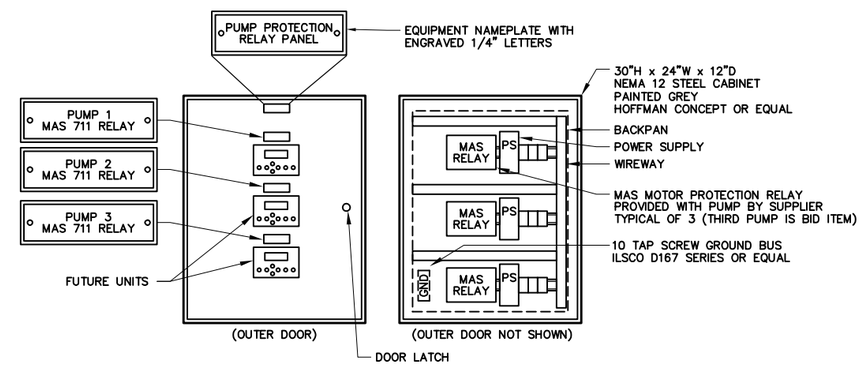

MAS — MAS RELAY PANEL
NOT TO SCALE

REGISTERED PROFESSIONAL ENGINEER
THOMAS P. FRISCH
No. E15761
ELECTRICAL
STATE OF CALIFORNIA
05/27/2020

DESIGN T. FRISCH
DRAWN N. CONANT
CHECKED M. FRISCH
APPROVED M. FISHER

FRISCH ENGINEERING, INC.
CONSULTING ELECTRICAL ENGINEERS
13405 FOLSOM BLVD, UNIT 600
FOLSOM, CA 95630
PH 916 353 1025
WWW.FRISCHENGINEERING.COM
CIVIL • STRUCTURAL • MECHANICAL

FILE: 17-082 20-E-02.DWG
DATE: MAY 28, 2020 TIME: 7:06:14PM

WATERWORKS ENGINEERS
2260 Douglas Blvd. Suite 150 • Roseville, CA 95661 • 916-780-2888

CITY OF MORRO BAY
WATER RECLAMATION FACILITY
LIFT STATON AND OFFSITE PIPELINES

ELECTRICAL
PUMP STATION B
PANELBOARD SCHEDULE AND LOAC CALCULATIONS

DATE MAY 2020
PROJECT NUMBER 17-082
DRAWING NUMBER 20-E-02
SHEET NUMBER 200

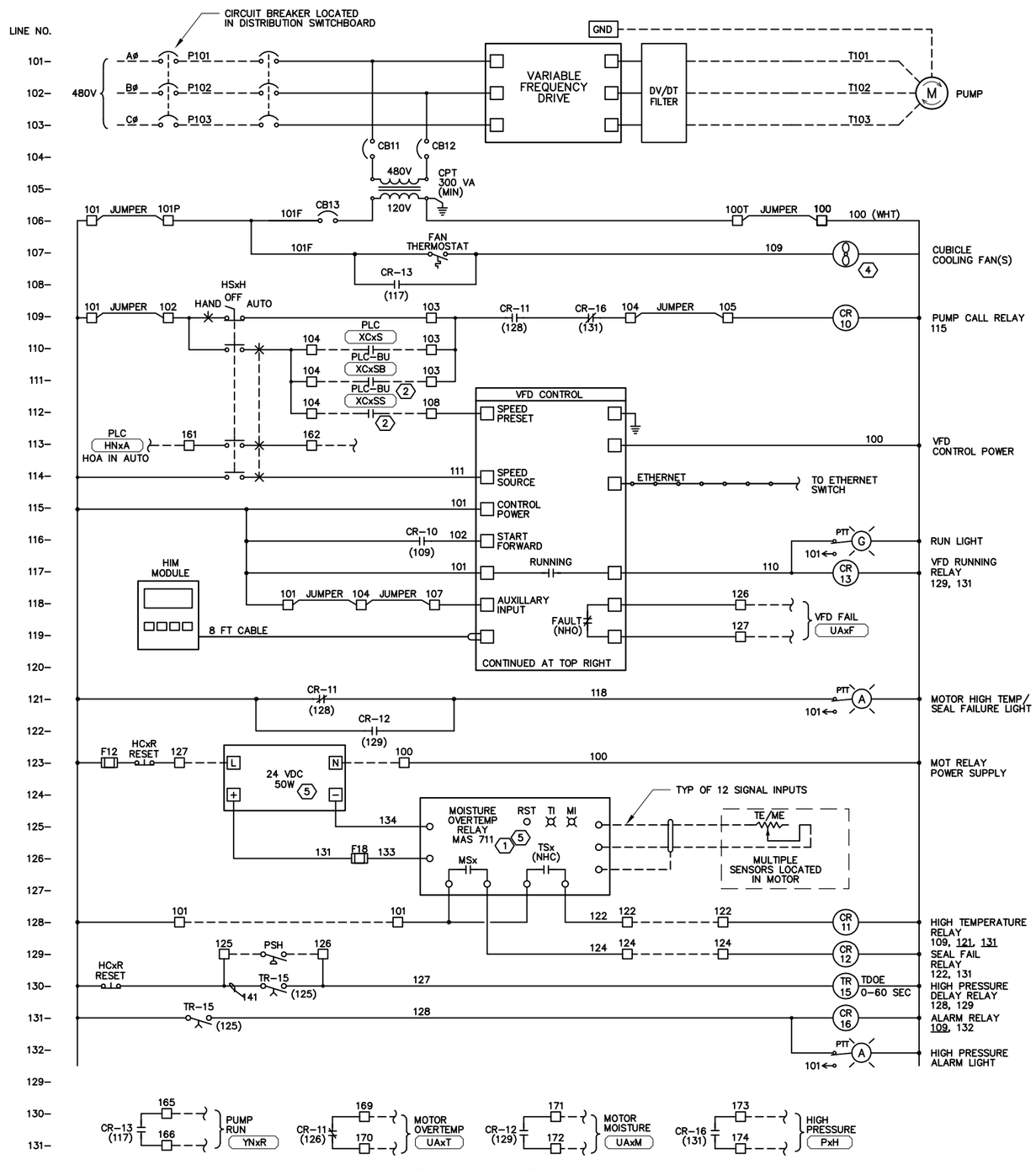

VFD ELEMENTARY DIAGRAM

SIMILAR DIAGRAM FOR PUMPS 10, 20, 30 – SEE NOTES

P101 P201 P301

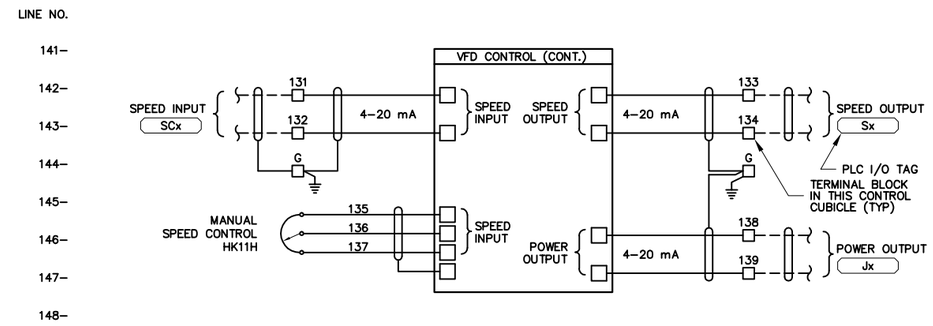

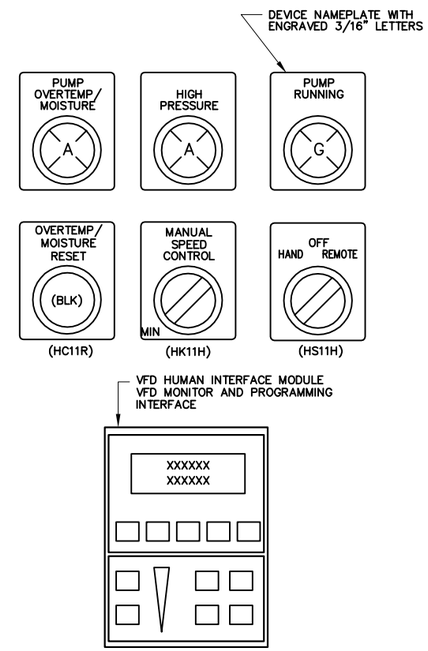

DOOR LAYOUT

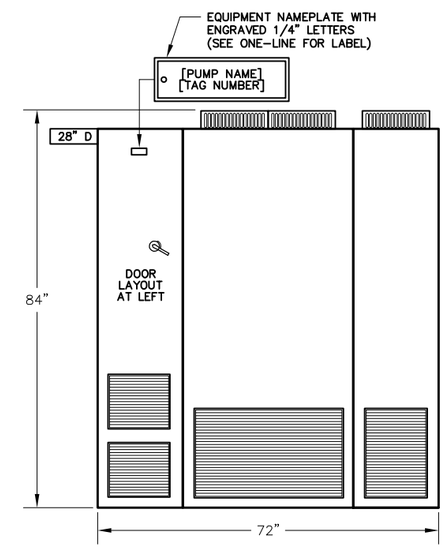

CABINET BUILT VFD PANEL ELEVATION

NOT TO SCALE

NOTES REFERENCED IN DRAWING:

1. RELAY TO BE SUPPLIED BY PUMP MANUFACTURER. INSTALL AND WIRE PER MANUFACTURER'S DRAWINGS PRIOR TO FACTORY TESTING AND DELIVERY TO JOB SITE.
2. FROM BACK-UP CONTROLS. SEE CONTROL PANEL DRAWGINS DWG 00-E-06 – 00-E-08.
3. PROVIDE VFD WITH 115 VAC CONTROL CIRCUIT INTERFACE. NO EXCEPTIONS.
4. PROVIDE COOLING FANS AS REQUIRED TO REMOVE HEAT GENERATED BY INTERNAL COMPONENTS AND MAINTAIN TEMPERATURE WITHIN DRIVE MANUFACTURER RATINGS.
5. RELAY AND POWER SUPPLY TO BE LOCATED IN REMOTE PANEL. SEE DETAIL MAS.

GENERAL NOTES:

1. SIMILAR DIAGRAM FOR PUMP NO. 1 ~ 3.
2. TERMINAL BLOCKS AND WIRES SHALL BE LABELED SAME EXCEPTION: WIRES TO PLC SHALL BE NUMBERED PER CONTROL PANEL TERMINAL BLOCK NUMBER.

REGISTERED PROFESSIONAL ENGINEER THOMAS P. FRISCH No. E15761 ELECTRICAL STATE OF CALIFORNIA

05/27/2020

DESIGN T. FRISCH
DRAWN N. CONANT
CHECKED M. FRISCH
APPROVED M. FISHER

FRISCH ENGINEERING, INC.
CONSULTING ELECTRICAL ENGINEERS
3405 FOLSOM BLVD, UNIT 600
SACRAMENTO, CA 95820
PH 916 353 1025
WWW.FRISCHENGINEERING.COM
FILE: 17-082-E-03.DWG
DATE: MAY 28, 2020 TIME: 4:11:15 PM

WATERWORKS ENGINEERS
2260 Douglas Blvd. Suite 150 • Roseville, CA 95661 • 916-780-2888

CITY OF MORRO BAY
WATER RECLAMATION FACILITY
LIFT STATON AND OFFSITE PIPELINES

ELECTRICAL
VFD ELEMENTARY DIAGRAM

DATE MAY 2020
PROJECT NUMBER 17-082
DRAWING NUMBER 20-E-03
SHEET NUMBER 201

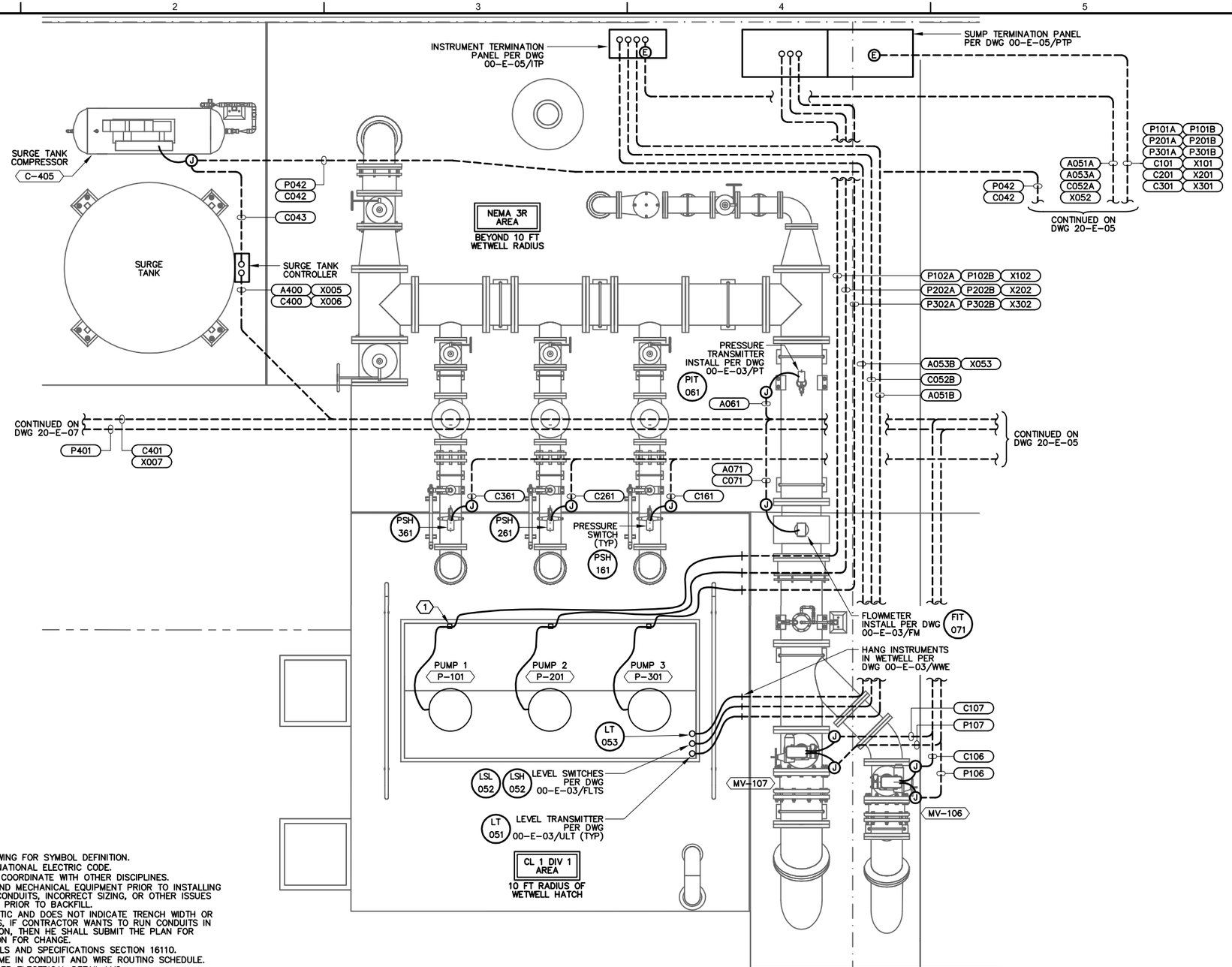

ELECTRICAL PLAN NOTES:

1. SEE ELECTRICAL SYMBOLS AND ABBREVIATIONS DRAWING FOR SYMBOL DEFINITION.
2. ALL WORK SHALL CONFORM TO LOCAL CODES AND NATIONAL ELECTRIC CODE.
3. SITEPLAN ACCURATE FOR ELECTRICAL WORK ONLY. COORDINATE WITH OTHER DISCIPLINES.
4. CONFIRM HOOKUP REQUIREMENTS FOR ELECTRICAL AND MECHANICAL EQUIPMENT PRIOR TO INSTALLING UNDERGROUND CONDUIT AND STUB-UPS. MISSING CONDUITS, INCORRECT SIZING, OR OTHER ISSUES MUST BE BROUGHT TO THE ATTENTION OF ENGINEER PRIOR TO BACKFILL.
5. CONDUIT ROUTING IS SHOWN GENERALLY DIAGRAMMATIC AND DOES NOT INDICATE TRENCH WIDTH OR TRENCH LAYOUT. FOR CONDUITS OUTSIDE BUILDINGS, IF CONTRACTOR WANTS TO RUN CONDUITS IN ROUTES OTHER THAN THOSE SHOWN FOR ANY REASON, THEN HE SHALL SUBMIT THE PLAN FOR APPROVAL PRIOR TO INSTALLATION. SPECIFY REASON FOR CHANGE.
6. INSTALL NON-UTILITY CONDUITS PER DRAWING DETAILS AND SPECIFICATIONS SECTION 16110.
7. CONDUITS SIZE, TYPE AND FILL DEFINED BY TAG NAME IN CONDUIT AND WIRE ROUTING SCHEDULE.
8. INSTALL UNDERGROUND NON-DUCTBANK CONDUITS PER ELECTRICAL DETAIL LVC.
9. CONDUIT TRANSITIONS SHALL BE PER EXPOSED CONDUIT TRANSITION DETAIL ECT.
10. EXPOSED CONDUIT TYPE AND FITTINGS TO BE USED ABOVE TRANSITION SHALL BE PER AREA CLASSIFICATION DEFINED IN CONDUIT SPECIFICATIONS AND EQUIPMENT SPECIFIC DETAIL.
11. REPAIR SURFACE TO PREVIOUS CONDITION FOR ALL UNDERGROUND CONDUIT ROUTES. GROUT, CAULK, AND PAINT ANY PENETRATIONS INTO STRUCTURES FOR WATERTIGHT SEAL.
12. USE SS EXPANSION WEDGE ANCHORS OR EPOXY ANCHORS AS NECESSARY FOR EQUIPMENT MOUNTING.
13. RECEPTACLES TO BE GROUND FAULT INTERRUPTER (GFI) TYPE AND WEATHERPROOF (WP) OUTDOORS AND WHERE SHOWN.
14. STUB UP CONDUITS BENEATH GENERATOR FRAME PER MANUFACTURER RECOMMENDATIONS. USE FLEXIBLE CONDUIT FOR TRANSITION BETWEEN EXPOSED CONDUIT TRANSTION AND ELECTRICAL CONNECTION BOX AND GENERATOR CONTROL PANEL.
15. UTILITY PRIMARY AND SECONDARY CONDUITS, TRANSFORMER PAD, PULL BOXES AND REMOVABLE BOLLARDS SHALL BE INSTALLED PER POWER UTILITY ENGINEERED DRAWINGS AND STANDARDS.
16. ASSUME 100 FT OF UNDERGROUND RUN BEYOND DRAWING FOR UTILITY CONNECTIONS. CONNECTION POINT SHALL BE AS DETERMINED BY UTILITY.

NOTES:

ADD THE PREFIX 20 TO COMPLETE INSTRUMENT OR EQUIPMENT TAG REFFERENCE ON THIS SHEET.
EXAMPLE: P-20101 FOR PUMP 1

DRAWING REFERENCED NOTES:

1. HANG PUMP CABLES ON J-HOOKS IN WETWELL TO ALL PUMPS.

PUMP STATION B POWER AND CONTROL PLAN

SCALE: 1/2" = 1'

0 2 4
(Approximate Scale in Feet)

REGISTERED PROFESSIONAL ENGINEER
THOMAS P. FRISCH
No. E15761
ELECTRICAL
STATE OF CALIFORNIA
05/27/2020

DESIGN T. FRISCH
DRAWN N. CONANT
CHECKED M. FRISCH
APPROVED M. FISHER

FRISCH ENGINEERING, INC.
CONSULTING ELECTRICAL ENGINEERS
13405 FOLSOM BLVD, UNIT 600
FOLSOM, CA 95630
PH 916 353 1025
WWW.FRISCHENGINEERING.COM
FILE: 17-082-20-E-04.DWG
DATE: MAY 29, 2020 TIME: 2:11:05PM

WATERWORKS ENGINEERS
2260 Douglas Blvd. Suite 150 • Roseville, CA 95661 • 916-780-2888

CITY OF MORRO BAY
WATER RECLAMATION FACILITY
LIFT STATON AND OFFSITE PIPELINES

ELECTRICAL
PUMP STATION B
POWER AND CONTROL PLAN

DATE MAY 2020
PROJECT NUMBER 17-082
DRAWING NUMBER 20-E-04
SHEET NUMBER 202

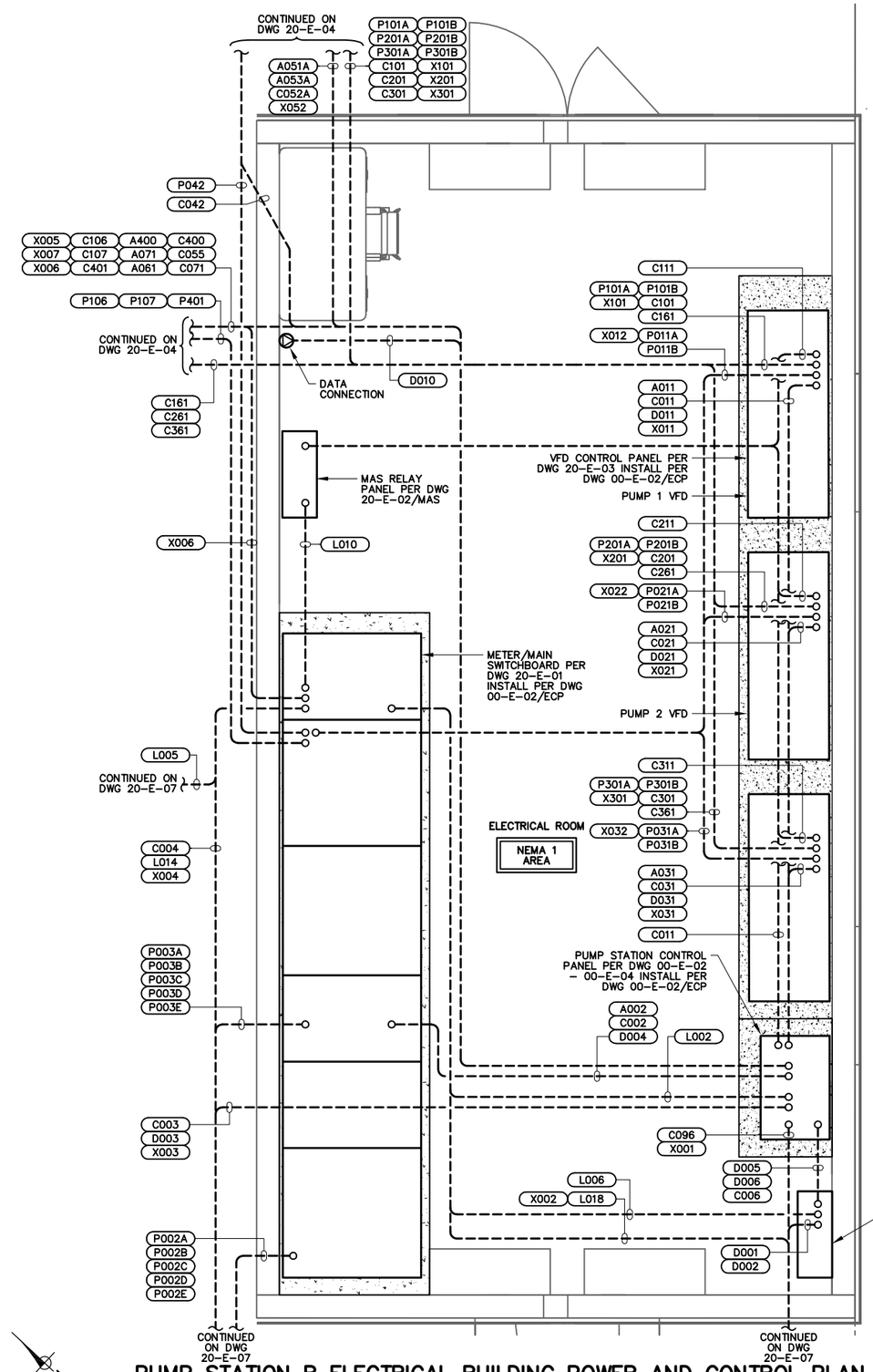

PUMP STATION B ELECTRICAL BUILDING POWER AND CONTROL PLAN

SCALE: 1/2" = 1'

ELECTRICAL PLAN NOTES:

1. SEE ELECTRICAL SYMBOLS AND ABBREVIATIONS DRAWING FOR SYMBOL DEFINITION.
2. ALL WORK SHALL CONFORM TO LOCAL CODES AND NATIONAL ELECTRIC CODE.
3. SITEPLAN ACCURATE FOR ELECTRICAL WORK ONLY. COORDINATE WITH OTHER DISCIPLINES.
4. CONFIRM HOOKUP REQUIREMENTS FOR ELECTRICAL AND MECHANICAL EQUIPMENT PRIOR TO INSTALLING UNDERGROUND CONDUIT AND STUB-UPS. MISSING CONDUITS, INCORRECT SIZING, OR OTHER ISSUES MUST BE BROUGHT TO THE ATTENTION OF ENGINEER PRIOR TO BACKFILL.
5. CONDUIT ROUTING IS SHOWN GENERALLY DIAGRAMMATIC AND DOES NOT INDICATE TRENCH WIDTH OR TRENCH LAYOUT. FOR CONDUITS OUTSIDE BUILDINGS, IF CONTRACTOR WANTS TO RUN CONDUITS IN ROUTES OTHER THAN THOSE SHOWN FOR ANY REASON, THEN HE SHALL SUBMIT THE PLAN FOR APPROVAL PRIOR TO INSTALLATION. SPECIFY REASON FOR CHANGE.
6. INSTALL NON-UTILITY CONDUITS PER DRAWING DETAILS AND SPECIFICATIONS SECTION 16110.
7. CONDUITS SIZE, TYPE AND FILL DEFINED BY TAG NAME IN CONDUIT AND WIRE ROUTING SCHEDULE.
8. INSTALL UNDERGROUND NON-DUCTBANK CONDUITS PER ELECTRICAL DETAIL LVC.
9. CONDUIT TRANSITIONS SHALL BE PER EXPOSED CONDUIT TRANSITION DETAIL ECT.
10. EXPOSED CONDUIT TYPE AND FITTINGS TO BE USED ABOVE TRANSITION SHALL BE PER AREA CLASSIFICATION DEFINED IN CONDUIT SPECIFICATIONS AND EQUIPMENT SPECIFIC DETAIL.
11. REPAIR SURFACE TO PREVIOUS CONDITION FOR ALL UNDERGROUND CONDUIT ROUTES. GROUT, CAULK, AND PAINT ANY PENETRATIONS INTO STRUCTURES FOR WATERTIGHT SEAL.
12. USE SS EXPANSION WEDGE ANCHORS OR EPOXY ANCHORS AS NECESSARY FOR EQUIPMENT MOUNTING.
13. RECEPTACLES TO BE GROUND FAULT INTERRUPTER (GFI) TYPE AND WEATHERPROOF (WP) OUTDOORS AND WHERE SHOWN.
14. STUB UP CONDUITS BENEATH GENERATOR FRAME PER MANUFACTURER RECOMMENDATIONS. USE FLEXIBLE CONDUIT FOR TRANSITION BETWEEN EXPOSED CONDUIT TRANSTION AND ELECTRICAL CONNECTION BOX AND GENERATOR CONTROL PANEL.
15. UTILITY PRIMARY AND SECONDARY CONDUITS, TRANSFORMER PAD, PULL BOXES AND REMOVABLE BOLLARDS SHALL BE INSTALLED PER POWER UTILITY ENGINEERED DRAWINGS AND STANDARDS.
16. ASSUME 100 FT OF UNDERGROUND RUN BEYOND DRAWING FOR UTILITY CONNECTIONS. CONNECTION POINT SHALL BE AS DETERMINED BY UTILITY.

NOTES:

ADD THE PREFIX 20 TO COMPLETE INSTRUMENT OR EQUIPMENT TAG REFFERENCE ON THIS SHEET.
EXAMPLE: P-20101 FOR PUMP 1

REGISTERED PROFESSIONAL ENGINEER THOMAS P. FRISCH No. E15761 ELECTRICAL STATE OF CALIFORNIA
05/27/2020

DESIGN T. FRISCH
DRAWN N. CONANT
CHECKED M. FRISCH
APPROVED M. FISHER

FRISCH ENGINEERING, INC.
CONSULTING ELECTRICAL ENGINEERS
3405 FOLSOM BLVD, UNIT 600
FOLSOM, CA 95630
PH 916 353 1025
WWW.FRISCHENGINEERING.COM
FILE: 17-082-E-04.DWG
DATE: MAY 28, 2020 TIME: 11:07:20AM

WATERWORKS ENGINEERS
2260 Douglas Blvd, Suite 150 • Roseville, CA 95661 • 916-780-2888

CITY OF MORRO BAY
WATER RECLAMATION FACILITY
LIFT STATON AND OFFSITE PIPELINES

ELECTRICAL
PUMP STATION B
ELECTRICAL BUILDING
POWER AND CONTROL PLAN

DATE MAY 2020
PROJECT NUMBER 17-082
DRAWING NUMBER 20-E-05
SHEET NUMBER 203

FIXTURE SCHEDULE

CODE LETTER	FIXTURE TYPE	FIXTURE LAMPS	WATTS/ FIXTURE	MANUFACTURER OR APPROVED EQUAL	MOUNTING ARRANGEMENT	NOTES
A	STRIP LUMINAIRE, 4 FT, VAPORTIGHT MOLDED POLYCARBONATE HOUSING FROSTED LENS, MEDIUM DISTRIBUTION	6000 LUMEN 4500K	120V 50W	ATLAS ILW48LED4D RAB SEAL4-50/D10	CEILING MOUNT FIXTURE	U.L. LISTED -20F TO 140F
B	WALL PACK LIGHT - MEDIUM DARK BRONZE COLOR ALUMINUM CASE	7000 LUMEN 4000K	120V 64W	ATLAS WPM64LED RAB WPLEDFC80N/PCS	WALL MOUNT 15 FT AFF	U.L. LISTED FOR WET LOCATIONS PHOTOCELL CONTROL FULL CUTOFF
EXE	EXIT LIGHT PACK WITH EGRESS LAMPS AND REMOTE OUTDOOR EGRESS FIXTURE LED LAMPS WITH RED LED SIGN INTEGRAL BATTERY AND CHARGER	2 LED 3W	120V 5W	DUAL-LITE HCX-U-R-W-03L-RC12 CPRSB0603L	WALL MOUNT 9 FT AFF	WHITE INTERIOR, BROWN EXTERIOR DUAL LED LAMPS INDOORS AND OUT 12W REMOTE LIGHT CAPACITY
EF	12" EXHAUST FAN WITH FAN INTAKE GUARD FIBERGLASS GRAVITY OPERATED SHUTTER AND THERMOSTAT CONTROL		1/8 HP 120 VAC 1 PHASE	DAYTON GRAINGER 5C530	WALL MOUNT	LINE VOLTAGE THERMOSTAT 50 - 90 DEG F COOLING GRAINGER 6GVX8 OR EQUAL
IDU	INDOOR HVAC UNIT		120 VAC	SEE MECHANICAL		
ODU	OUTDOOR HVAC UNIT		240 VAC	SEE MECHANICAL		PROVIDE DISCONNECT
RDU	REFRIGERANT DISTRIBUITON UNIT		120 VAC	SEE MECHANICAL		

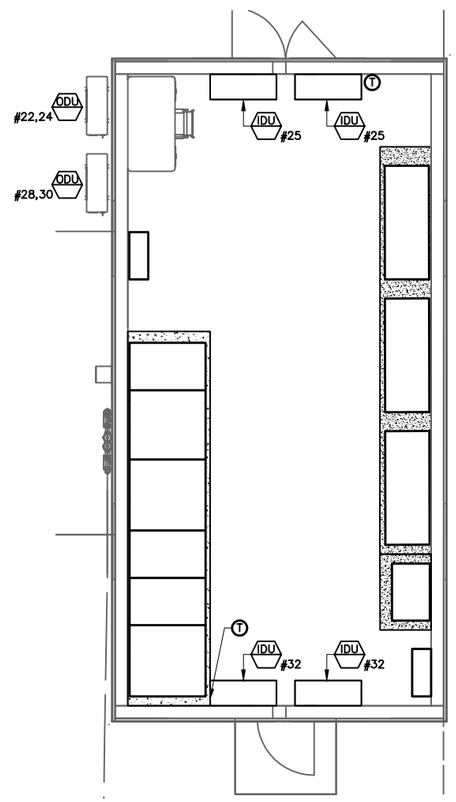

PUMP STATION B HVAC PLAN

SCALE: 1/4" = 1'

0 4 8
(Approximate Scale in Feet)

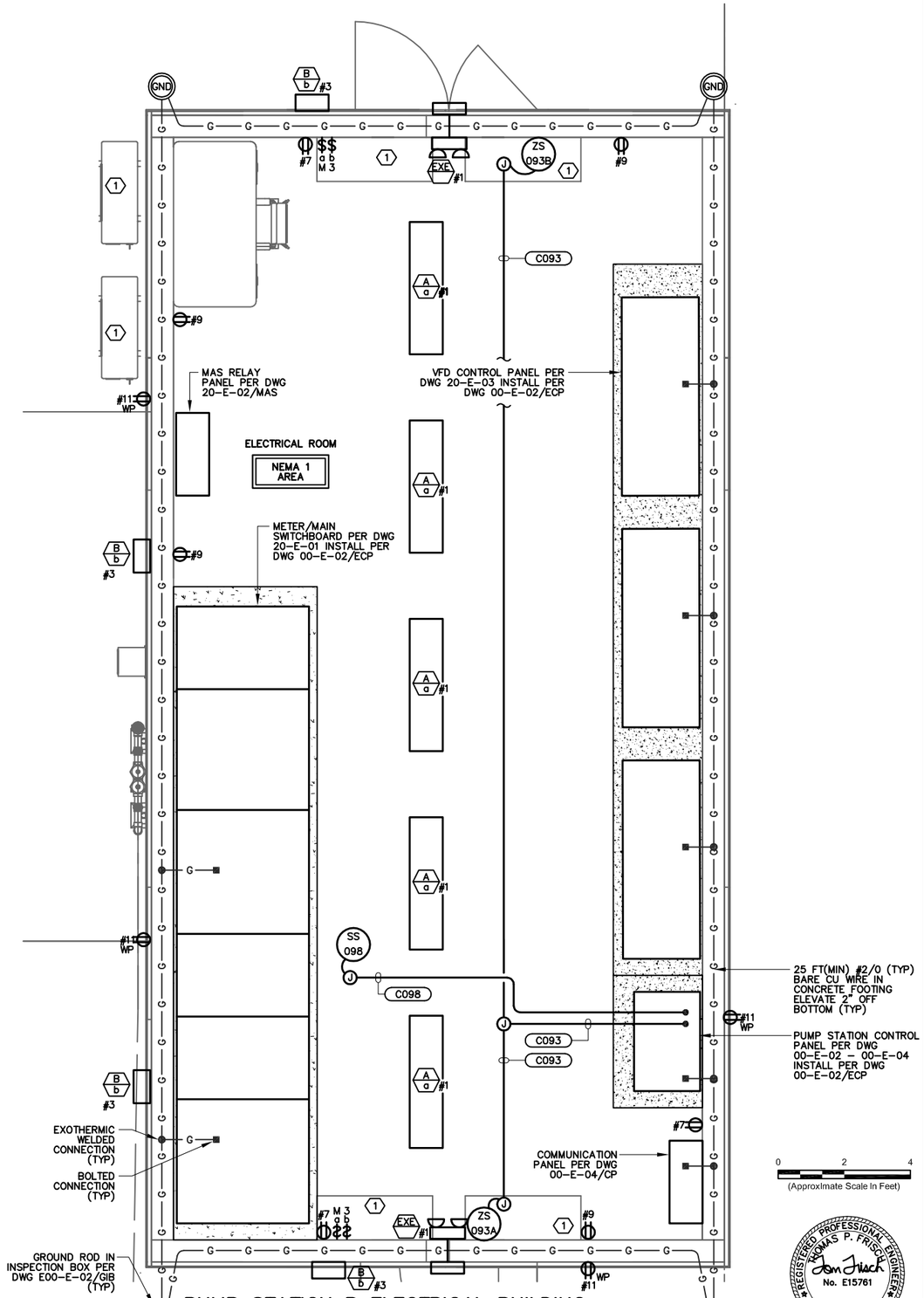

PUMP STATION B ELECTRICAL BUILDING LIGHTING AND RECEPTACLE PLAN

SCALE: 1/2" = 1'

0 2 4
(Approximate Scale In Feet)

REGISTERED PROFESSIONAL ENGINEER
THOMAS P. FRISCH
No. E15761
ELECTRICAL
STATE OF CALIFORNIA
05/27/2020

DRAWING REFERENCED NOTES:

(1) HVAC EQUIPMENT PER PUMP STATION B HVAC PLAN SEE LEFT

GENERAL NOTES THAT APPLY TO LIGHTING AND RECEPTACLE PLAN.

1. THESE NOTES SHALL APPLY TO ALL EQUIPMENT OR FIXTURES WITH ELECTRICAL CONNECTIONS BUT WITHOUT CONDUITS SHOWN, CONDUIT NUMBERS, OR NOT LISTED IN SCHEDULE.
2. PROVIDE AND INSTALL NECESSARY WIRES IN SURFACE MOUNT 3/4" (MINIMUM) CONDUIT FOR FOR ELECTRICAL FIXTURE ARRANGEMENT AS SHOWN. MAXIMUM 3 CIRCUITS PER CONDUIT SECTION OVER 24" IN LENGTH. CONDUITS SHALL NOT EXCEED 40% FILL.
3. CONDUITS UNDER SLAB SHALL BE PVC-40 WITH STUB-OUTS PER EXPOSED CONDUIT TRANSITION DETAIL.
4. CONDUITS ABOVE CEILING SHALL BE EMT WITH COMPRESSION STYLE FITTINGS. CONDUITS BELOW CEILING SHALL BE GRS. ACCESS TO ATTIC AREA SHALL NOT BE REQUIRED TO INSTALL CONDUCTORS.
5. DEVICE BOXES AND CONDUIT BODIES SHALL BE CAST IRON OR ALUMINUM WITH THREADED HUB.
6. CONDUCTORS SHALL BE COPPER TYPE THHN, CLASS C STRANDING, #12 AWG (MINIMUM). SIZED PER NEC BY CIRCUIT AMPACITY.
7. MOUNT CONDUITS USING SINGLE BOLT GALVANIZED PIPE STRAPS AND CLAMP BACK SPACERS.
8. USE SS EXPANSION WEDGE ANCHORS OR EPOXY ANCHORS AS NECESSARY FOR EQUIPMENT MOUNTING.
9. EXPOSED CONDUIT SHALL BE PAINTED WITH WALL AND/OR CEILING AS SPECIFIED.
10. PROVIDE AND INSTALL FIXTURES PER SCHEDULE THIS PAGE, QUANTITY AS SHOWN IN DRAWINGS.
11. PROVIDE AND INSTALL ALL DEVICE BOXES, JUNCTION BOXES, RECEPTACLES, SWITCHES, AND COVERS MOUNT ALL RECEPTACLES AT 48" AFF UNLESS OTHERWISE NOTED.
12. RECEPTACLES TO BE GROUND FAULT INTERRUPTER (GFI) TYPE AND WEATHERPROOF (WP) WHERE SHOWN.
13. SEE ELECTRICAL SYMBOLS AND ABBREVIATIONS DRAWING FOR SYMBOL DEFINITION.
14. ALL WORK SHALL CONFORM TO LOCAL CODES AND NATIONAL ELECTRIC CODE.
15. SWITCH TYPE: T= TIME SWITCH, M= MOTION DETECTOR, 3= 3-WAY.

NOTES:

ADD THE PREFIX 20 TO COMPLETE INSTRUMENT OR EQUIPMENT TAG REFFERENCE ON THIS SHEET.
EXAMPLE: P-20101 FOR PUMP 1

DESIGN T. FRISCH
DRAWN N. CONANT
CHECKED M. FRISCH
APPROVED M. FISHER

FRISCH ENGINEERING, INC.
CONSULTING ELECTRICAL ENGINEERS
3485 FOLSOM BLVD, UNIT 600
FOLSOM, CA 95630
PH 916 353 1025
WWW.FRISCHENGINEERING.COM

FILE: 17-082-SHEET-0204-DWG
DATE: MAY 28, 2020 TIME: 4:50:05PM

WATERWORKS ENGINEERS
2260 Douglas Blvd. Suite 150 • Roseville, CA 95661 • 916-780-2888

CITY OF MORRO BAY
WATER RECLAMATION FACILITY
LIFT STATON AND OFFSITE PIPELINES

ELECTRICAL
PUMP STATION B
ELECTRICAL BUILDING
LIGHTING AND RECEPTACLE PLAN

DATE MAY 2020
PROJECT NUMBER 17-082
DRAWING NUMBER 20-E-06
SHEET NUMBER 204

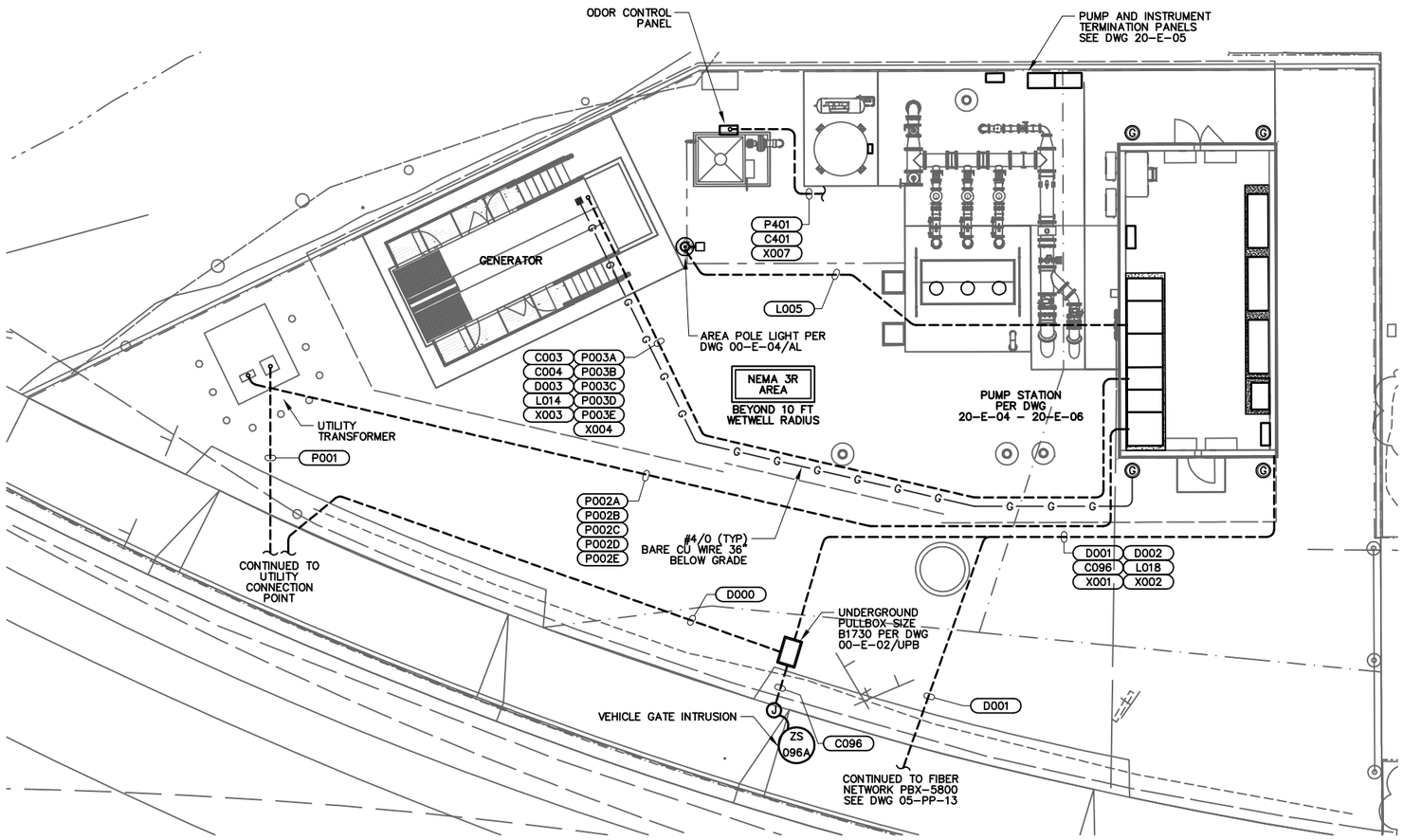

PUMP STATION B ELECTRICAL SITE PLAN

SCALE: 1/8" = 1'

0 8 16
(Approximate Scale In Feet)

ELECTRICAL PLAN NOTES:

1. SEE ELECTRICAL SYMBOLS AND ABBREVIATIONS DRAWING FOR SYMBOL DEFINITION.
2. ALL WORK SHALL CONFORM TO LOCAL CODES AND NATIONAL ELECTRIC CODE.
3. SITEPLAN ACCURATE FOR ELECTRICAL WORK ONLY. COORDINATE WITH OTHER DISCIPLINES.
4. CONFIRM HOOKUP REQUIREMENTS FOR ELECTRICAL AND MECHANICAL EQUIPMENT PRIOR TO INSTALLING UNDERGROUND CONDUIT AND STUB-UPS. MISSING CONDUITS, INCORRECT SIZING, OR OTHER ISSUES MUST BE BROUGHT TO THE ATTENTION OF ENGINEER PRIOR TO BACKFILL.
5. CONDUIT ROUTING IS SHOWN GENERALLY DIAGRAMMATIC AND DOES NOT INDICATE TRENCH WIDTH OR TRENCH LAYOUT. FOR CONDUITS OUTSIDE BUILDINGS, IF CONTRACTOR WANTS TO RUN CONDUITS IN ROUTES OTHER THAN THOSE SHOWN FOR ANY REASON, THEN HE SHALL SUBMIT THE PLAN FOR APPROVAL PRIOR TO INSTALLATION. SPECIFY REASON FOR CHANGE.
6. INSTALL NON-UTILITY CONDUITS PER DRAWING DETAILS AND SPECIFICATIONS SECTION 16110.
7. CONDUITS SIZE, TYPE AND FILL DEFINED BY TAG NAME IN CONDUIT AND WIRE ROUTING SCHEDULE.
8. INSTALL UNDERGROUND NON-DUCTBANK CONDUITS PER ELECTRICAL DETAIL LVC.
9. CONDUIT TRANSITIONS SHALL BE PER EXPOSED CONDUIT TRANSITION DETAIL ECT.
10. EXPOSED CONDUIT TYPE AND FITTINGS TO BE USED ABOVE TRANSITION SHALL BE PER AREA CLASSIFICATION DEFINED IN CONDUIT SPECIFICATIONS AND EQUIPMENT SPECIFIC DETAIL.
11. REPAIR SURFACE TO PREVIOUS CONDITION FOR ALL UNDERGROUND CONDUIT ROUTES. GROUT, CAULK, AND PAINT ANY PENETRATIONS INTO STRUCTURES FOR WATERTIGHT SEAL.
12. USE SS EXPANSION WEDGE ANCHORS OR EPOXY ANCHORS AS NECESSARY FOR EQUIPMENT MOUNTING.
13. RECEPTACLES TO BE GROUND FAULT INTERRUPTER (GFI) TYPE AND WEATHERPROOF (WP) OUTDOORS AND WHERE SHOWN.
14. STUB UP CONDUITS BENEATH GENERATOR FRAME PER MANUFACTURER RECOMMENDATIONS. USE FLEXIBLE CONDUIT FOR TRANSITION BETWEEN EXPOSED CONDUIT TRANSTION AND ELECTRICAL CONNECTION BOX AND GENERATOR CONTROL PANEL.
15. UTILITY PRIMARY AND SECONDARY CONDUITS, TRANSFORMER PAD, PULL BOXES AND REMOVABLE BOLLARDS SHALL BE INSTALLED PER POWER UTILITY ENGINEERED DRAWINGS AND STANDARDS.
16. ASSUME 100 FT OF UNDERGROUND RUN BEYOND DRAWING FOR UTILITY CONNECTIONS. CONNECTION POINT SHALL BE AS DETERMINED BY UTILITY.

NOTES:

ADD THE PREFIX 20 TO COMPLETE INSTRUMENT OR EQUIPMENT TAG REFFERENCE ON THIS SHEET.
EXAMPLE: P-20101 FOR PUMP 1

REGISTERED PROFESSIONAL ENGINEER
THOMAS P. FRISCH
No. E15761
ELECTRICAL
STATE OF CALIFORNIA
05/27/2020

DESIGN T. FRISCH
DRAWN N. CONANT
CHECKED M. FRISCH
APPROVED M. FISHER

FRISCH ENGINEERING, INC.
CONSULTING ELECTRICAL ENGINEERS
13405 FOLSOM BLVD, UNIT 600
FOLSOM, CA 95630
PH 916 353 1025
WWW.FRISCHENGINEERING.COM
FILE: 17-082-PS-B-ELEC-01.DWG
DATE: MAY 28, 2020 TIME: 4:50:37PM

WATERWORKS ENGINEERS
2260 Douglas Blvd, Suite 150 • Roseville, CA 95661 • 916-780-2888

CITY OF MORRO BAY
WATER RECLAMATION FACILITY
LIFT STATON AND OFFSITE PIPELINES

ELECTRICAL
PUMP STATION B
ELECTRICAL SITE PLAN

DATE MAY 2020
PROJECT NUMBER 17-082
DRAWING NUMBER 20-E-07
SHEET NUMBER 205

CONDUIT & WIRE ROUTING SCHEDULE

REV	CONDUIT DETAILS TAG NO.	FROM	TO	QTY	SIZE	TYPE	POWER WIRE QTY	POWER WIRE SIZE	CONTROL WIRE QTY	CONTROL WIRE SIZE	GROUND SIZE	NOTES
	A002	CONTROL PANEL	SWITCHBOARD	1	3/4"	SPEC	–	–	–	–	–	PULL ROPE
	A011	CONTROL PANEL	PUMP 1 VFD	1	1-1/2"	SPEC	–	–	3	#18 TSPR	#14	
	A021	CONTROL PANEL	PUMP 2 VFD	1	1-1/2"	SPEC	–	–	3	#18 TSPR	#14	
	A031	CONTROL PANEL	PUMP 3 VFD	1	1-1/2"	SPEC	–	–	3	#18 TSPR	#14	
	A051 A	CONTROL PANEL	INSTRUMENT JUNCTION BOX	1	3/4"	SPEC	–	–	1	#18 TSPR	#14	
	A051 B	INSTRUMENT JUNCTION BOX	LEVEL TRANSMITTER LT-051	1	1"	SPEC	–	–	1	MFG CABLE	–	
	A053A	CONTROL PANEL	INSTRUMENT JUNCTION BOX	1	3/4"	SPEC	–	–	1	#18 TSPR	#14	
	A053B	INSTRUMENT JUNCTION BOX	BACK-UP LEVEL TRANSMITTER LT-053	1	1"	SPEC	–	–	1	MFG CABLE	–	
	A061	CONTROL PANEL	PRESSURE TRANSMITTER PIT-061	1	3/4"	SPEC	–	–	1	#18 TSPR	#14	
	A071	CONTROL PANEL	FLOWMETER FIT-071	1	3/4"	SPEC	–	–	1	#18 TSPR	#14	
	A082	CONTROL PANEL	BUILDING TEMP TIT-082	1	3/4"	SPEC	–	–	1	#18 TSPR	#14	
	A400	CONTROL PANEL	SURGE TANK CONTROLLER	1	1"	SPEC	–	–	4	#18 TSPR	#14	
	C002	CONTROL PANEL	SWITCHBOARD	1	1"	SPEC	–	–	12	#14	#14	
	C003	CONTROL PANEL	GENERATOR	1	1"	SPEC	–	–	6	#14	#14	
	C004	ATS	GENERATOR	1	3/4"	SPEC	–	–	4	#14	#14	
	C006	CONTROL PANEL	COMMUNICATION PANEL	1	1"	SPEC	–	–	4	#14	#12	
	C011	CONTROL PANEL	PUMP 1 VFD	1	1-1/2"	SPEC	–	–	20	#14	#14	
	C021	CONTROL PANEL	PUMP 2 VFD	1	1-1/2"	SPEC	–	–	20	#14	#14	
	C031	CONTROL PANEL	PUMP 3 VFD	1	1-1/2"	SPEC	–	–	20	#14	#14	
	C042	CONTROL PANEL	SURGE COMPRESSOR	1	1"	SPEC	–	–	–	–	–	PULL ROPE
	C043	SURGE TANK CONTROLLER	SURGE COMPRESSOR	1	1"	SPEC	–	–	8	#14	#14	
	C051	CONTROL PANEL	INSTRUMENT JUNCTION BOX	1	3/4"	SPEC	–	–	4	#14	#12	
	C052A	CONTROL PANEL	INSTRUMENT JUNCTION BOX	1	3/4"	SPEC	–	–	6	#14	#14	
	C052B	INSTRUMENT JUNCTION BOX	LEVEL SWITCHES LSH-052, LSL-052	1	1"	SPEC	–	–	4	#14	#14	
	C055	CONTROL PANEL	SURGE TANK	1	1"	SPEC	–	–	4	#14	#14	
	C071	CONTROL PANEL	FLOWMETER FIT-071	1	3/4"	SPEC	–	–	2	#14	#10	
	C093	CONTROL PANEL	BUILDING INTRUSION ZS-093A, ZS-093B	1	3/4"	SPEC	–	–	4	#14	#14	
	C096	VEHICLE GATE INTRUSION	CONTROL PANEL	1	3/4"	SPEC	–	–	2	#14	#14	VIA PB-C01
	C098	CONTROL PANEL	SMOKE ALARM	1	3/4"	SPEC	–	–	4	#14	#14	
	C101	PUMP 1 VFD	SUMP TERMINATION PANEL	1	1"	SPEC	–	–	12	#14	#14	
	C106	CONTROL PANEL	MV-106	1	1"	SPEC	–	–	10	#14	#14	
	C107	CONTROL PANEL	MV-107	1	1"	SPEC	–	–	10	#14	#14	
	C111	PUMP 1 VFD	MAS PANEL	1	3/4"	SPEC	–	–	12	#14	#14	
	C161	PUMP 1 VFD	PUMP 1 HIGH PRESSURE PSH-161	1	3/4"	SPEC	–	–	2	#14	#14	
	C162	PUMP 2 VFD	PUMP 2 HIGH PRESSURE PSH-162	1	3/4"	SPEC	–	–	2	#14	#14	
	C163	PUMP 3 VFD	PUMP 3 HIGH PRESSURE PSH-163	1	3/4"	SPEC	–	–	2	#14	#14	
	C201	PUMP 2 VFD	SUMP TERMINATION PANEL	1	1"	SPEC	–	–	12	#14	#14	
	C211	PUMP 2 VFD	MAS PANEL	1	3/4"	SPEC	–	–	12	#14	#14	
	C301	PUMP 3 VFD	SUMP TERMINATION PANEL	1	1"	SPEC	–	–	12	#14	#14	
	C311	PUMP 3 VFD	MAS PANEL	1	3/4"	SPEC	–	–	12	#14	#14	
	C400	CONTROL PANEL	SURGE TANK CONTROLLER	1	1"	SPEC	–	–	8	#14	#14	
	C401	CONTROL PANEL	ODOR CONTROL PANEL	1	1"	SPEC	–	–	6	#14	#14	
	D000	TEL-CO UTILITY	PB-C01	1	2"	SPEC	–	–	–	–	–	PULL ROPE
	D001	FIBER NETWORK	COMMUNICATION PANEL	1	4"	SPEC	–	–	2	FO CABLE	–	
	D002	PB-C01	COMMUNICATION PANEL	1	3/4"	SPEC	–	–	–	–	–	PULL ROPE
	D003	CONTROL PANEL	GENERATOR	1	3/4"	SPEC	–	–	–	–	–	PULL ROPE
	D004	CONTROL PANEL	SWITCHBOARD	1	3/4"	SPEC	–	–	1	CAT 6	–	
	D006	COMMUNICATION PANEL	CONTROL PANEL	1	3/4"	SPEC	–	–	4	CAT 6	#14	
	D007	COMMUNICATION PANEL	CONTROL PANEL	1	1"	SPEC	–	–	1	FO CABLE	–	PATCH CORD
	D010	CONTROL PANEL	DESK DATA CONNECTION	1	3/4"	SPEC	–	–	1	CAT 6	–	
	D011	CONTROL PANEL	PUMP 1 VFD	1	3/4"	SPEC	–	–	2	CAT 6	#14	
	D021	CONTROL PANEL	PUMP 2 VFD	1	3/4"	SPEC	–	–	2	CAT 6	#14	
	D031	CONTROL PANEL	PUMP 3 VFD	1	3/4"	SPEC	–	–	2	CAT 6	#14	

NOTES PERTAINING TO CONDUIT SCHEDULE:

1. CONDUIT TYPE "SPEC" IS AS DEFINED IN SPECIFICATIONS SECTION 16110 FOR NON-EXPOSED AND EXPOSED PORTIONS OF CONDUIT RUN.
2. SEE SPECIFICATIONS AND EXPOSED TRANSITION DETAIL OR EQUIPMENT SPECIFIC DETAIL FOR CONDUIT TRANSITION MATERIALS AND METHODS FROM BELOW GROUND TO EXPOSED PORTIONS OF RUN.
3. CONDUITS OVER 15 FT LENGTH (EITHER EMPTY OR WITH CONDUCTORS SIZED LESS THAN #8 AWG), SHALL INCLUDE A POLY PULL STRING. STRING SHALL BE TIED OFF AT EACH END.
4. FITTINGS, CONDULETS, BOXES AND COVERS SHALL MATCH DUTY OF ADJACENT PIPE, SEE SPECIFICATIONS 16110.
5. WIRE SIZING IN TABLE IS BASED ON COPPER CONDUCTORS, THHN INSULATION, WITH TYPE C STRANDING. OTHER CONDUCTOR TYPES, IF ALLOWED OR REQUIRED PER SPECIFICATION, MAY REQUIRE CONDUITS TO BE UPSIZED BY CONTRACTOR AND SUBMITTED FOR APPROVAL.
6. SEE GENERAL NOTES ON LIGHTING AND RECEPTACLE PLAN FOR CONDUIT REQUIREMENTS FOR ELECTRICAL DEVICES WITHOUT CONDUITS SHOWN, CONDUIT NUMBERS, OR NOT LISTED IN SCHEDULE.

REGISTERED PROFESSIONAL ENGINEER
THOMAS P. FRISCH
No. E15761
ELECTRICAL
STATE OF CALIFORNIA
05/27/2020

DESIGN T. FRISCH
DRAWN N. CONANT
CHECKED M. FRISCH
APPROVED M. FISHER

FRISCH ENGINEERING, INC.
CONSULTING ELECTRICAL ENGINEERS
13405 FOLSOM BLVD, UNIT 600
FOLSOM, CA 95630
PH 916 353 1025
WWW.FRISCHENGINEERING.COM
CERTIFICATE OF AUTHORIZATION #5089

FILE: 17-082-E-08.DWG
DATE: MAY 28, 2020 TIME: 5:13:31 PM

WATERWORKS ENGINEERS
2260 Douglas Blvd, Suite 150 • Roseville, CA 95661 • 916-780-2888

CITY OF MORRO BAY
WATER RECLAMATION FACILITY
LIFT STATON AND OFFSITE PIPELINES

ELECTRICAL
PUMP STATION B
CONDUIT SCHEDULE 1

DATE MAY 2020
PROJECT NUMBER 17-082
DRAWING NUMBER 20-E-08
SHEET NUMBER 206

CONDUIT & WIRE ROUTING SCHEDULE

REV	CONDUIT DETAILS TAG NO.	FROM	TO	QTY	SIZE	TYPE	POWER WIRE QTY	POWER WIRE SIZE	CONTROL WIRE QTY	CONTROL WIRE SIZE	GROUND SIZE	NOTES
	L002	PANEL LP	CONTROL PANEL	1	3/4"	SPEC	4	#12	–	–	#12	
	L005	PANEL LP	AREA POLE LIGHT	1	3/4"	SPEC	2	#12	–	–	#12	
	L006	PANEL LP	COMMUNICATION PANEL	1	3/4"	SPEC	2	#12	–	–	#12	
	L010	PANEL LP	MAS PANEL	1	3/4"	SPEC	2	#12	–	–	#12	
	L014	PANEL LP	GENERATOR	1	1"	SPEC	2	#8	4	#12	#10	
	L018	PANEL LP	PB–C01	1	3/4"	SPEC	2	#12	–	–	#12	
	P001	UTILITY POLE	UTILITY TRANSFORMER	1	4"	SPEC	–	–	–	–	–	PER UTILITY REQUIREMENTS
	P002A,B,C,D,E	UTILITY TRANSFORMER	METER/MAIN	5	5"	SPEC	–	–	–	–	–	PER UTILITY REQUIREMENTS
	P003A,B,C,D,E	GENERATOR	ATS	5	4"	SPEC	3	#500	–	–	#4/0	
	P011 A,B	SWITCHBOARD	PUMP 1 VFD	2	3"	SPEC	3	#250	–	–	#2	
	P021 A,B	SWITCHBOARD	PUMP 2 VFD	2	3"	SPEC	3	#250	–	–	#2	
	P031 A,B	SWITCHBOARD	PUMP 3 VFD	2	3"	SPEC	3	#250	–	–	#2	
	P042	SWITCHBOARD	SURGE COMPRESSOR	1	1"	SPEC	3	#10	–	–	#12	
	P101 A,B	PUMP 1 VFD	SUMP TERMINATION PANEL	2	4"	SPEC	3	#250	–	–	#3	VFD CABLE
	P102 A,B	SUMP TERMINATION PANEL	PUMP 1	2	4"	SPEC	2	MFG CABLE	–	–	#1	
	P106	SWITCHBOARD	MV–106	1	1"	SPEC	3	#12	–	–	#12	
	P107	SWITCHBOARD	MV–107	1	1"	SPEC	3	#12	–	–	#12	
	P201 A,B	PUMP 2 VFD	SUMP TERMINATION PANEL	2	4"	SPEC	3	#250	–	–	#3	VFD CABLE
	P202A,B	SUMP TERMINATION PANEL	PUMP 2	2	4"	SPEC	2	MFG CABLE	–	–	#1	
	P301 A,B	PUMP 3 VFD	SUMP TERMINATION PANEL	2	4"	SPEC	3	#250	–	–	#3	VFD CABLE
	P302A,B	SUMP TERMINATION PANEL	PUMP 3	2	4"	SPEC	2	MFG CABLE	–	–	#1	
	P401	SWITCHBOARD	ODOR CONTROL PANEL	1	1"	SPEC	3	#12	–	–	#12	
	X001	CONTROL PANEL	PB–C01	1	1"	SPEC	–	–	–	–	–	PULL ROPE
	X002	PANEL LP	PB–C01	1	1"	SPEC	–	–	–	–	–	PULL ROPE
	X003	CONTROL PANEL	GENERATOR	1	1"	SPEC	–	–	–	–	–	PULL ROPE
	X004	PANEL LP	GENERATOR	1	1"	SPEC	–	–	–	–	–	PULL ROPE
	X005	CONTROL PANEL	SURGE TANK	1	1"	SPEC	–	–	–	–	–	PULL ROPE
	X006	PANEL LP	SURGE TANK	1	1"	SPEC	–	–	–	–	–	PULL ROPE
	X007	CONTROL PANEL	ODOR CONTROL STARTER	1	1"	SPEC	–	–	–	–	–	PULL ROPE
	X011	CONTROL PANEL	PUMP 1 VFD	1	1"	SPEC	–	–	–	–	–	PULL ROPE
	X012	SWITCHBOARD	PUMP 1 VFD	1	1"	SPEC	–	–	–	–	–	PULL ROPE
	X021	CONTROL PANEL	PUMP 2 VFD	1	1"	SPEC	–	–	–	–	–	PULL ROPE
	X022	SWITCHBOARD	PUMP 2 VFD	1	1"	SPEC	–	–	–	–	–	PULL ROPE
	X031	CONTROL PANEL	PUMP 3 VFD	1	1"	SPEC	–	–	–	–	–	PULL ROPE
	X032	SWITCHBOARD	PUMP 3 VFD	1	1"	SPEC	–	–	–	–	–	PULL ROPE
	X052	CONTROL PANEL	INSTRUMENT JUNCTION BOX	1	1"	SPEC	–	–	–	–	–	PULL ROPE
	X053	INSTRUMENT JUNCTION BOX	WETWELL	1	1"	SPEC	–	–	–	–	–	PULL ROPE
	X101	PUMP 1 VFD	SUMP TERMINATION PANEL	1	1"	SPEC	–	–	–	–	–	PULL ROPE
	X102	SUMP TERMINATION PANEL	WETWELL	1	4"	SPEC	–	–	–	–	–	PULL ROPE
	X201	PUMP 2 VFD	SUMP TERMINATION PANEL	1	1"	SPEC	–	–	–	–	–	PULL ROPE
	X202	SUMP TERMINATION PANEL	WETWELL	1	4"	SPEC	–	–	–	–	–	PULL ROPE
	X301	PUMP 3 VFD	SUMP TERMINATION PANEL	1	1"	SPEC	–	–	–	–	–	PULL ROPE
	X302	SUMP TERMINATION PANEL	WETWELL	1	4"	SPEC	–	–	–	–	–	PULL ROPE

NOTES PERTAINING TO CONDUIT SCHEDULE:

1. CONDUIT TYPE "SPEC" IS AS DEFINED IN SPECIFICATIONS SECTION 16110 FOR NON–EXPOSED AND EXPOSED PORTIONS OF CONDUIT RUN.
2. SEE SPECIFICATIONS AND EXPOSED TRANSITION DETAIL OR EQUIPMENT SPECIFIC DETAIL FOR CONDUIT TRANSITION MATERIALS AND METHODS FROM BELOW GROUND TO EXPOSED PORTIONS OF RUN.
3. CONDUITS OVER 15 FT LENGTH (EITHER EMPTY OR WITH CONDUCTORS SIZED LESS THAN #8 AWG), SHALL INCLUDE A POLY PULL STRING. STRING SHALL BE TIED OFF AT EACH END.
4. FITTINGS, CONDULETS, BOXES AND COVERS SHALL MATCH DUTY OF ADJACENT PIPE, SEE SPECIFICATIONS 16110.
5. WIRE SIZING IN TABLE IS BASED ON COPPER CONDUCTORS, THHN INSULATION, WITH TYPE C STRANDING. OTHER CONDUCTOR TYPES, IF ALLOWED OR REQUIRED PER SPECIFICATION, MAY REQUIRE CONDUITS TO BE UPSIZED BY CONTRACTOR AND SUBMITTED FOR APPROVAL.
6. SEE GENERAL NOTES ON LIGHTING AND RECEPTACLE PLAN FOR CONDUIT REQUIREMENTS FOR ELECTRICAL DEVICES WITHOUT CONDUITS SHOWN, CONDUIT NUMBERS, OR NOT LISTED IN SCHEDULE.

REGISTERED PROFESSIONAL ENGINEER
THOMAS P. FRISCH
No. E15761
ELECTRICAL
STATE OF CALIFORNIA
05/27/2020

DESIGN T. FRISCH
DRAWN N. CONANT
CHECKED M. FRISCH
APPROVED M. FISHER

FRISCH ENGINEERING, INC.
CONSULTING ELECTRICAL ENGINEERS
13405 FOLSOM BLVD, UNIT 600
FOLSOM, CA 95630
PH 916 353 1025
WWW.FRISCHENGINEERING.COM
CA CORP. OF 1998
FILE: 17-082-E-09.DWG
DATE: MAY 28, 2020 TIME: 5:11:54PM

WATERWORKS ENGINEERS
2260 Douglas Blvd. Suite 150 • Roseville, CA 95661 • 916-780-2888

CITY OF MORRO BAY
WATER RECLAMATION FACILITY
LIFT STATON AND OFFSITE PIPELINES

ELECTRICAL
PUMP STATION B
CONDUIT SCHEDULE 2

DATE MAY 2020
PROJECT NUMBER 17-082
DRAWING NUMBER 20-E-09
SHEET NUMBER 207

P&ID SYMBOLS

ISA SYMBOLS

SYMBOL	DESCRIPTION
XXX / XXX	FIELD MOUNTED INSTRUMENT
XXX / XXX	INSTRUMENT MOUNTED ON DOOR OF LOCAL PANEL, OPERATOR ACCESSIBLE
XXX / XXX	INSTRUMENT MOUNTED ON DOOR OF FIELD PANEL, OPERATOR ACCESSIBLE
XXX / XXX	INSTRUMENT MOUNTED WITHIN PANEL, OPERATOR INACCESSIBLE
XXX / XXX	INSTRUMENT MOUNTED WITHIN FIELD PANEL, OPERATOR INACESSIBLE
I	OPERATION PERFORMED WITH LOGIC OR HARDWIRED DEVICES
MCE–XX	ASSOCIATED MOTOR CONTROL ELEMENTARY IF APPLICABLE
UNIT XXX / XXX	VISUAL DISPLAY OF PLC ANALOG REGISTER SCALE TO UNITS AS SHOWN
XXX / XXX	VISUAL DISPLAY OF PLC ANALOG ALARM REGISTER
XXX / XXX	VISUAL DISPLAY OF PLC DIGITAL REGISTER
XXX / XXX	VISUAL DISPLAY OF PLC DIGITAL ALARM REGISTER
X X	TAG DESCRIPTION
XXXX	PLC I/O TAG
	PLC DIGITAL INPUT
	PLC DIGITAL OUTPUT
	ANALOG INPUT
	ANALOG OUTPUT
	AUDIBLE ALARM (BUZZER OR HORN)
X	LAMP INDICATION COLOR DENOTED BY "X" RED, BLU, GRN, WHT, AMBER
a XXXX / XXXX a	CONTINUATION TAG FROM ONE AREA TO ANOTHER AREA OF DIFFERENT DRAWINGS "a" TAG IDENTIFIER TO POINT ON DRAWING NUMBER XXXX.
I–X / I–X	CONTINUED ON DWG I–X

LINE TYPES

	PRIMARY PROCESS LINE
	SECONDARY PROCESS LINE
	ELECTRICAL SIGNAL LINE (DIGITAL OR ANALOG)
	SOFTWARE OR DATA LINK
	BOUNDARY OF EQUIPMENT PACKAGE SYSTEM
	COMMUNICATION CONNECTION

VALVES

SYMBOL	DESCRIPTION
	GATE VALVE
	CHECK VALVE
	PLUG VALVE
	BALL VALVE
	BALL CHECK VALVE
	BUTTERFLY VALVE
	ANGLE VALVE
	NEEDLE VALVE
	RELIEF VALVE
	DIAPHRAGM VALVE
	3–WAY VALVE
	FLOW CONTROL VALVE
	PINCH VALVE
	CONE VALVE
	ANTISIPHON/BACKPRESSURE VALVE
S	SOLENOID VALVE (2–WAY) (S→M FOR MOTORIZED VALVE)
S	SOLENOID VALVE (3–WAY) (S→M FOR MOTORIZED VALVE)
S	SOLENOID VALVE (4–WAY) (S→M FOR MOTORIZED VALVE)
	PNEUMATIC DIAPHRAGM CONTROL VALVE
	PRESSURE SUSTAINING VALVE
	PRESSURE REGULATING VALVE
	MULTIFUNCTION VALVE
	SLUICE GATE (SG) OR SLIDE GATE (SLG)
	AIR RELIEF VALVE (ARV)
	FLOAT VALVE
	STRAINER
	BACKFLOW PREVENTER
CV	CALIBRATION VALVE
	CALIBRATION COLUMN
	ROTAMETER
	UNION

ACTUATORS

M	MOTORIZED
S	SOLENOID
S / A	PNEUMATIC OPERATOR S– SOLENOID – OPEN/CLOSE A– POSITIONER – MODULATING

PUMPS

SYMBOL	DESCRIPTION
	CENTRIFUGAL PUMP OR BLOWER
	SUBMERSIBLE SEWAGE PUMP
	VERTICAL TURBINE PUMP OR WELL PUMP
	SUBMERSIBLE WELL PUMP
	GEAR PUMP
	POSITIVE DISPLACEMENT PUMP OR BLOWER
	DIAPHRAGM PUMP
	PERISTALTIC PUMP
M M	MOTOR

SENSORS

SYMBOL	DESCRIPTION
	ORIFICE PLATE
LIT XXX	ULTRASONIC LEVEL TRANSMITTER (FLOW IF OVER FLUME OR WEIR)
LE XXX	CONDUCTANCE TYPE LEVEL ELEMENTS
LIT XXX	RADAR TYPE LEVEL TRANSMITTER
	GUIDED OPTION
LIT XXX	CAPACITANCE TYPE LEVEL TRANSMITTER

SENSORS

SYMBOL	DESCRIPTION
MAG	MAGNETIC FLOWMETER
%	DENSITY METER
~	ULTRASONIC FLOWMETER
	TURBINE OR PROPELLER METER
	VENTURI TUBE
	THERMAL DISPERSION FLOWMETER OR SWITCH
	PADDLE WHEEL FLOWMETER
C	CORIOLIS FLOWMETER

MISCELLANEOUS MECHANICAL ITEMS

SYMBOL	DESCRIPTION
	PIPE REDUCER
	RUPTURE DISC
	PRESSURE OR VACUUM RELIEF VALVE
	DIAPHRAGM SEAL
	ANNUALAR SEAL
	DRAIN TO WASTE
	MIXER
F OR F	FILTER
	VENT W/CAP OR SCREEN
	FLEXIBLE HOSE OR TUBING
	SPRAY NOZZLE SYSTEM
	EXPANSION JOINT
	STATIC MIXER
	EJECTOR / EDUCTOR
	HOSE COUPLING
	PULSATION DAMPENER
	OMNI ANTENNA NON–DIRECTIONAL
	YAGI ANTENNA DIRECTIONAL

P&ID ABBREVIATIONS

INSTRUMENTATION SYBMOLS

	FIRST LETTER: MEASURED OR INITIATING VARIABLE	FIRST LETTER: MODIFIER	SUCCEEDING LETTERS: READOUT PASSIVE FUNCTION	SUCCEEDING LETTERS: OUTPUT FUNCTION	SUCCEEDING LETTERS: MODIFIER
A	ANALYSIS		ALARM		
B	BURNER, COMBUSTION		USER'S CHOICE	USER'S CHOICE	USER'S CHOICE
C	CONDUCTIVITY			CONTROLLER	
D	DENSITY	DIFFERENTIAL			
E	VOLTAGE		SENSOR, PRIMARY ELEMENT		
F	FLOW	RATIO			
G	GENERAL		GLASS VIEWING DEVICE		
H	HAND				HIGH, OPENED
I	CURRENT		INDICATING, INDICATOR		
J	POWER	SCAN			
K	TIME, TIME SCHEDULED	TIME RATE OF CHANGE		CONTROL STATION	
L	LEVEL		LIGHT		LOW, CLOSED
M	MOISTURE	MOMENTARY			MIDDLE
N	STATUS		STATUS	USER'S CHOICE	USER'S CHOICE
O	OPERTOR		ORIFICE, RESTRICTION		
P	PRESSURE, VACUUM		POINT (TEST) CONNECTION		
Q	QUANTITY	INTEGRATE, TOTALIZE			
R	RESET		RECORD		
S	SPEED, FREQUENCY	SAFETY		SWITCH	
T	TEMPERATURE			TRANSMITTER	TEST
U	MULTIVARIABLE		MULTIFUNCTION	MULTIFUNCTION	MULTIFUNCTION
V	VIBRATION			VAVE, DAMPER, LOUVER	
W	WEIGHT		WELL		
X	SWITCH	X AXIS	UNCLASSIFIED	UNCLASSIFIED	UNCLASSIFIED
Y	EVENT, STATE OF PRESENCE	Y AXIS		RELAY, COMPUTER, CONVERTER	
Z	POSITION, DIMENSION	Z AXIS		DRIVER, ACTUATOR, UNCLASSIFIED FINAL CONTROL ELEMENT	

P&ID ABBREVIATIONS

SWITCH IDENTIFIER

F/R	FORWARD/REVERSE	OPN	OPEN
HOA	HAND–OFF–AUTO	CLS	CLOSE
HOR	HAND–OFF–REMOTE	SEL	SELECTOR
LOS	LOCK OUT STOP	S/S	START / STOP
L/R	LOCAL / REMOTE	%	PERCENT ADJUSTMENT
MOA	MANUAL–OFF–AUTO		
OCA	OPEN–CLOSE–AUTO		
O/C	OPEN / CLOSE		
O/O	ON / OFF		

REGISTERED PROFESSIONAL ENGINEER
THOMAS P. FRISCH
No. E15761
ELECTRICAL
STATE OF CALIFORNIA

05/27/2020

DESIGN T. FRISCH
DRAWN N. CONANT
CHECKED M. FRISCH
APPROVED M. FISHER

FRISCH ENGINEERING, INC.
CONSULTING ELECTRICAL ENGINEERS
13405 FOLSOM BLVD, UNIT 600
FOLSOM, CA 95630
PH 916 353 1025
WWW.FRISCHENGINEERING.COM
CTC FILE: 17-082-00-01
DATE: MAY 28, 2020 TIME: 11:08:25AM

WATERWORKS ENGINEERS
2260 Douglas Blvd. Suite 150 • Roseville, CA 95661 • 916-780-2888

CITY OF MORRO BAY
WATER RECLAMATION FACILITY
LIFT STATON AND OFFSITE PIPELINES

INSTRUMENTATION
SYMBOLS AND ABBREVIATIONS

DATE	MAY 2020
PROJECT NUMBER	17-082
DRAWING NUMBER	00-I-01
SHEET NUMBER	208

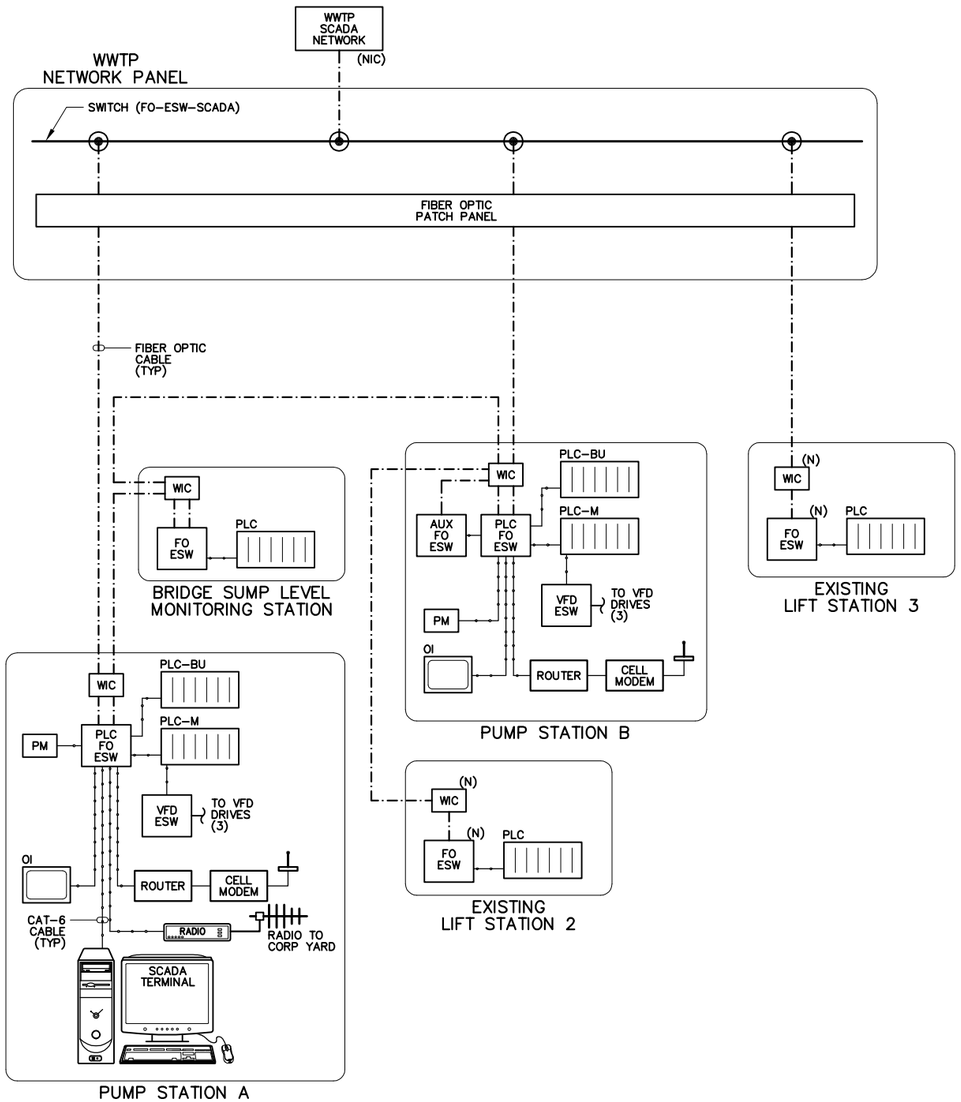

SCADA NETWORK TOPOLOGY

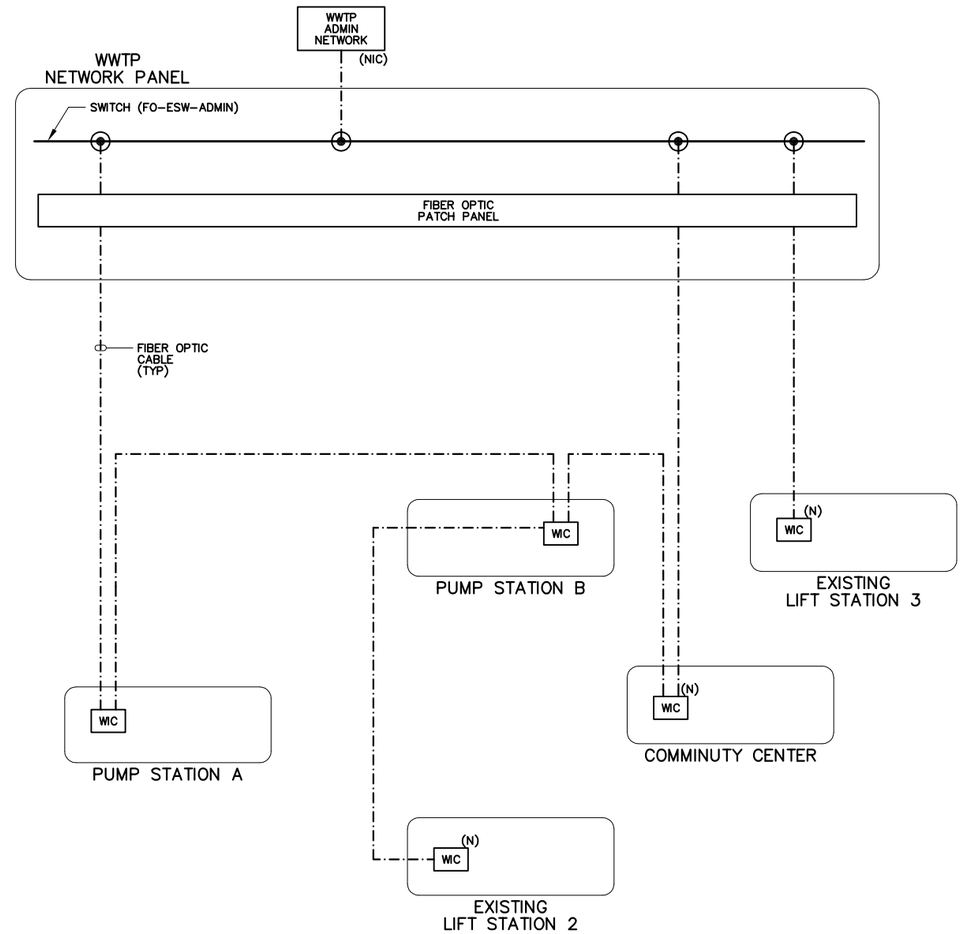

ADMIN NETWORK TOPOLOGY

LEGEND

SYMBOL	DESCRIPTION	SYMBOL	DESCRIPTION
PLC	COMPACT LOGIX PLC IN CONTROL PANEL (TCP)		FIBER OPTIC GIGABIT CONNECTION
			RJ-45 ETHERNET (CAT6) GIGABIT CONNECTION
OI	LOCAL SCADA TERMINAL		FAST ETHERNET (CAT6) 10/100 CONNECTION
ESW	ETHERNET SWITCH	RADIO	RADIO
FO ESW	FIBER OPTIC ETHERNET SWITCH	PM	POWER MONITOR
		WIC	FIBER OPTIC WIC (LOCATED IN COMMUNICATION PANEL AT NEW SITES)

REGISTERED PROFESSIONAL ENGINEER
THOMAS P. FRISCH
No. E15761
ELECTRICAL
STATE OF CALIFORNIA
05/27/2020

DESIGN T. FRISCH
DRAWN N. CONANT
CHECKED M. FRISCH
APPROVED M. FISHER

FRISCH ENGINEERING, INC.
CONSULTING ELECTRICAL ENGINEERS
13405 FOLSOM BLVD, UNIT 600
FOLSOM, CA 95630
PH 916 353 1025
WWW.FRISCHENGINEERING.COM
FILE: 17-082-00-02-DWG
DATE: MAY 29, 2020 TIME: 2:11:12PM

WATERWORKS ENGINEERS
2260 Douglas Blvd, Suite 150 • Roseville, CA 95661 • 916-780-2888

CITY OF MORRO BAY
WATER RECLAMATION FACILITY
LIFT STATON AND OFFSITE PIPELINES

INSTRUMENTATION
NETWORK TOPOLOGY

DATE MAY 2020
PROJECT NUMBER 17-082
DRAWING NUMBER 00-I-02
SHEET NUMBER 209

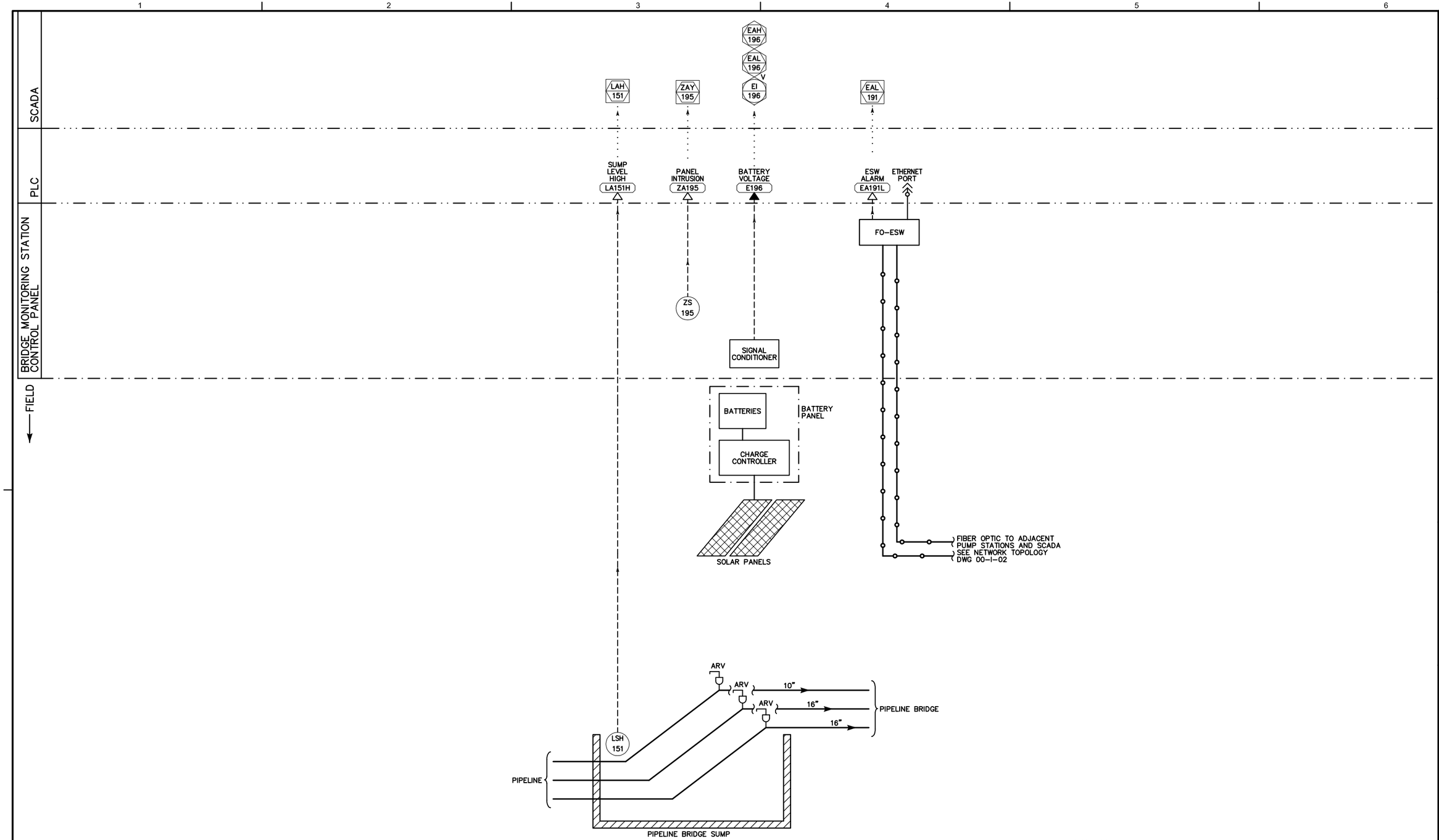

PIPELINE BRIDGE SUMP LEVEL MONITORING STATION P&ID

NOTES:

ADD THE PREFIX 05 TO COMPLETE INSTRUMENT OR EQUIPMENT TAG REFFERENCE ON THIS SHEET.
EXAMPLE: P-05151 FOR LEVEL SWITCH

REGISTERED PROFESSIONAL ENGINEER
THOMAS P. FRISCH
No. E15761
ELECTRICAL
STATE OF CALIFORNIA
05/27/2020

DESIGN T. FRISCH
DRAWN N. CONANT
CHECKED M. FRISCH
APPROVED M. FISHER

FRISCH ENGINEERING, INC.
CONSULTING ELECTRICAL ENGINEERS
3485 FOLSOM BLVD, UNIT 600
FOLSOM, CA 95630
PH 916 353 1025
WWW.FRISCHENGINEERING.COM
FILE: 17-082-05-I-01.DWG
DATE: MAY 29, 2020 TIME: 2:11 2:20PM

WATERWORKS ENGINEERS
2260 Douglas Blvd, Suite 150 • Roseville, CA 95661 • 916-780-2888

CITY OF MORRO BAY
WATER RECLAMATION FACILITY
LIFT STATON AND OFFSITE PIPELINES

INSTRUMENTATION
PIPELINE BRIDGE
SUMP LEVEL MONITORNING P&ID

DATE MAY 2020
PROJECT NUMBER 17-082
DRAWING NUMBER 05-I-01
SHEET NUMBER 210

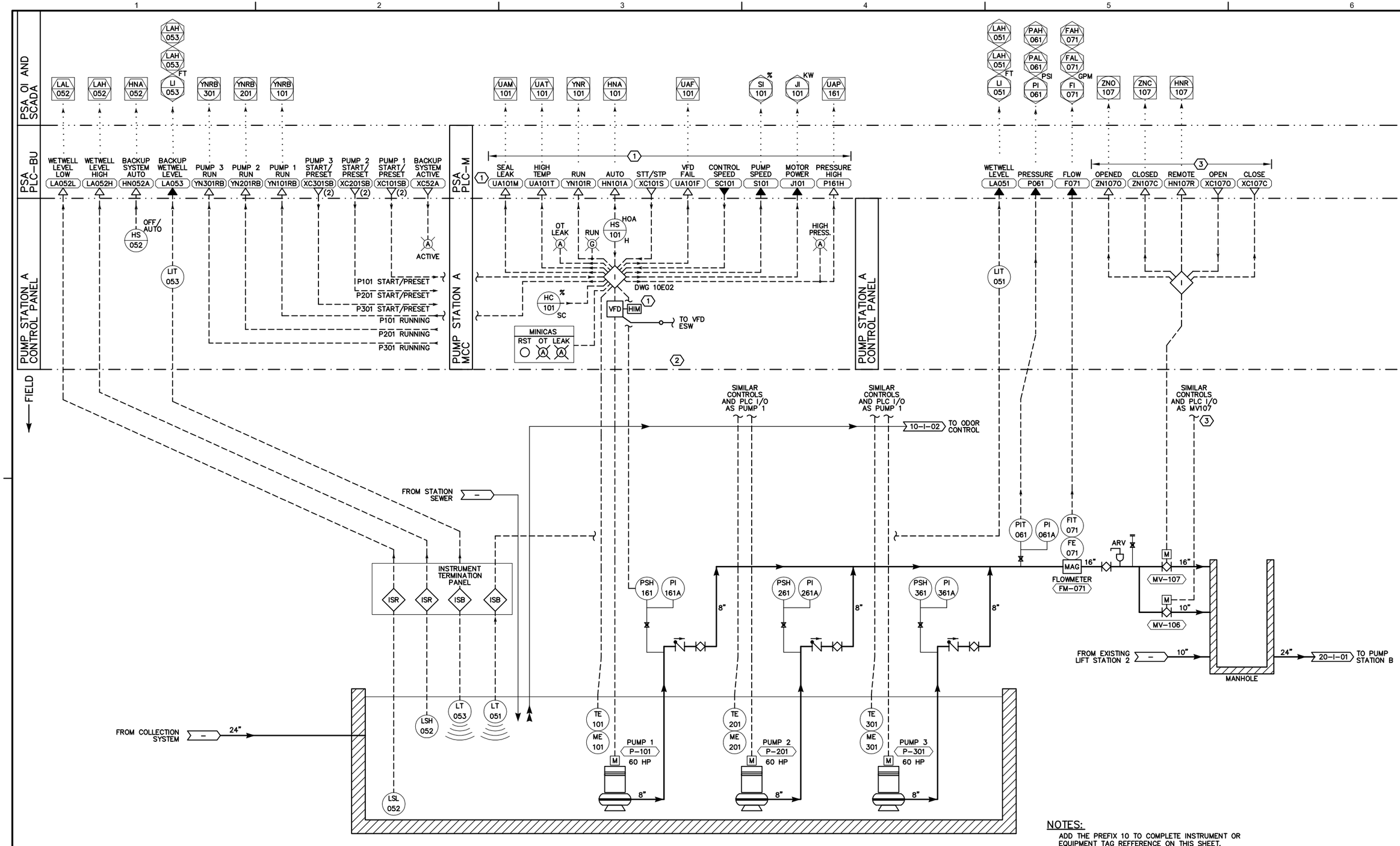

NOTES:

ADD THE PREFIX 10 TO COMPLETE INSTRUMENT OR EQUIPMENT TAG REFFERENCE ON THIS SHEET.
EXAMPLE: P-10101 FOR PUMP 1

NOTES REFERENCED IN DRAWING:

1. TYPICAL I/O CONTROLS AND VFDS FOR ALL PUMPS
2. LOCATED IN REMOTE PANEL
3. TYPICAL I/O CONTROLS FOR ALL MOTORIZED VALVES.

REGISTERED PROFESSIONAL ENGINEER
THOMAS P. FRISCH
No. E15761
ELECTRICAL
STATE OF CALIFORNIA
05/27/2020

PUMP STATION A P&ID

DESIGN T. FRISCH
DRAWN N. CONANT
CHECKED M. FRISCH
APPROVED M. FISHER

FRISCH ENGINEERING, INC.
CONSULTING ELECTRICAL ENGINEERS
3405 FOLSOM BLVD, UNIT 600
FOLSOM, CA 95630
PH 916 353 1025
WWW.FRISCHENGINEERING.COM
FILE: 17-082-10-I-01.DWG
DATE: MAY 29, 2020 TIME: 2:11:28PM

WATERWORKS ENGINEERS
2260 Douglas Blvd. Suite 150 • Roseville, CA 95661 • 916-780-2888

CITY OF MORRO BAY
WATER RECLAMATION FACILITY
LIFT STATION AND OFFSITE PIPELINES

INSTRUMENTATION
PUMP STATION A P&ID

DATE MAY 2020
PROJECT NUMBER 17-082
DRAWING NUMBER 10-I-01
SHEET NUMBER 211

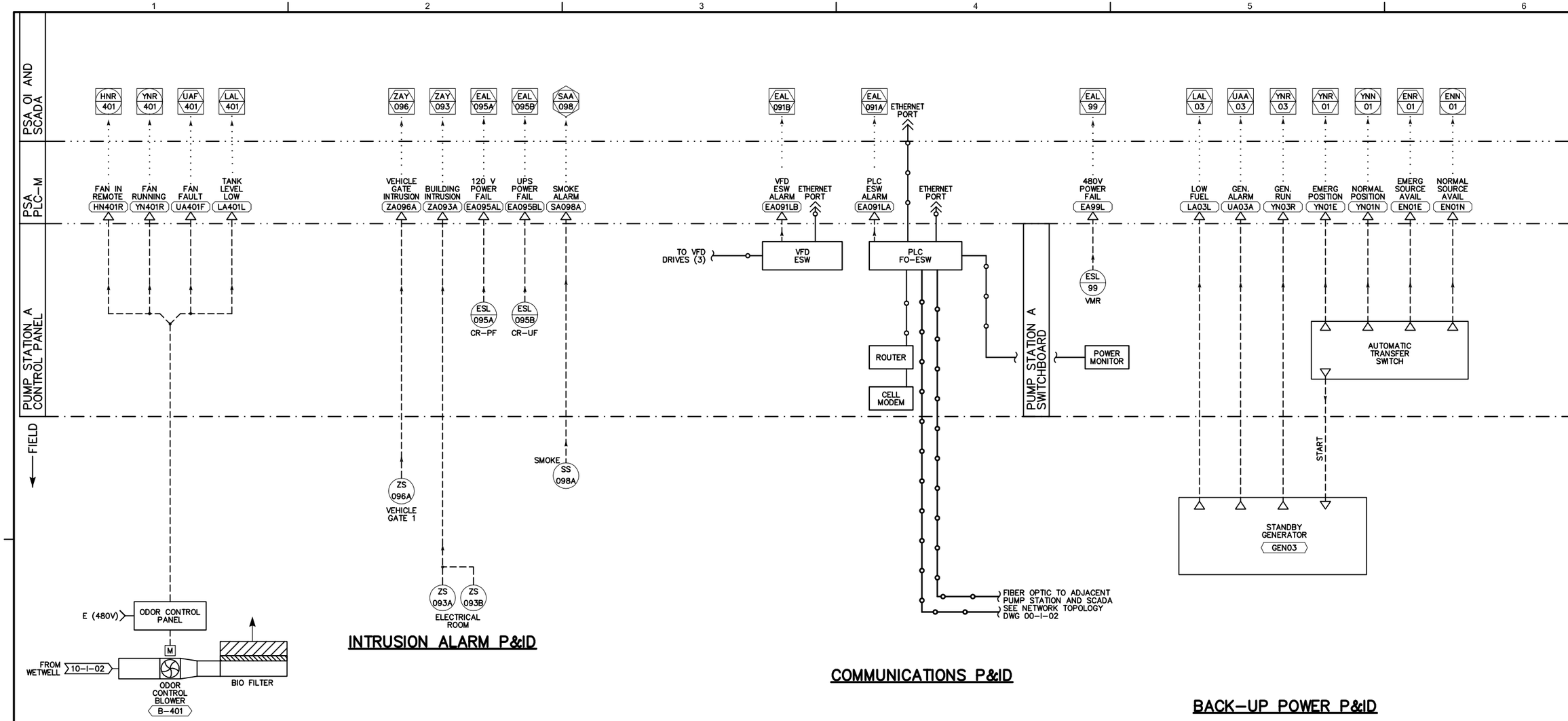

INTRUSION ALARM P&ID

COMMUNICATIONS P&ID

BACK-UP POWER P&ID

ODOR CONTROL SYSTEM P&ID

NOTES:

ADD THE PREFIX 10 TO COMPLETE INSTRUMENT OR EQUIPMENT TAG REFFERENCE ON THIS SHEET.
EXAMPLE: P-10401 FOR ODOR CONTROL

REGISTERED PROFESSIONAL ENGINEER
THOMAS P. FRISCH
No. E15761
ELECTRICAL
STATE OF CALIFORNIA
05/27/2020

DESIGN T. FRISCH
DRAWN N. CONANT
CHECKED M. FRISCH
APPROVED M. FISHER

FRISCH ENGINEERING, INC.
CONSULTING ELECTRICAL ENGINEERS
3405 FOLSOM BLVD, UNIT 600
SACRAMENTO, CA 95820
PH 916 353 1025
WWW.FRISCHENGINEERING.COM
FILE: 17-082-10-I-02.DWG
DATE: MAY 29, 2020 TIME: 2:11:36PM

WATERWORKS ENGINEERS
2260 Douglas Blvd, Suite 150 • Roseville, CA 95661 • 916-780-2888

CITY OF MORRO BAY
WATER RECLAMATION FACILITY
LIFT STATON AND OFFSITE PIPELINES

INSTRUMENTATION
PUMP STATION A
MISCELLANEOUS P&ID

DATE MAY 2020
PROJECT NUMBER 17-082
DRAWING NUMBER 10-I-02
SHEET NUMBER 212

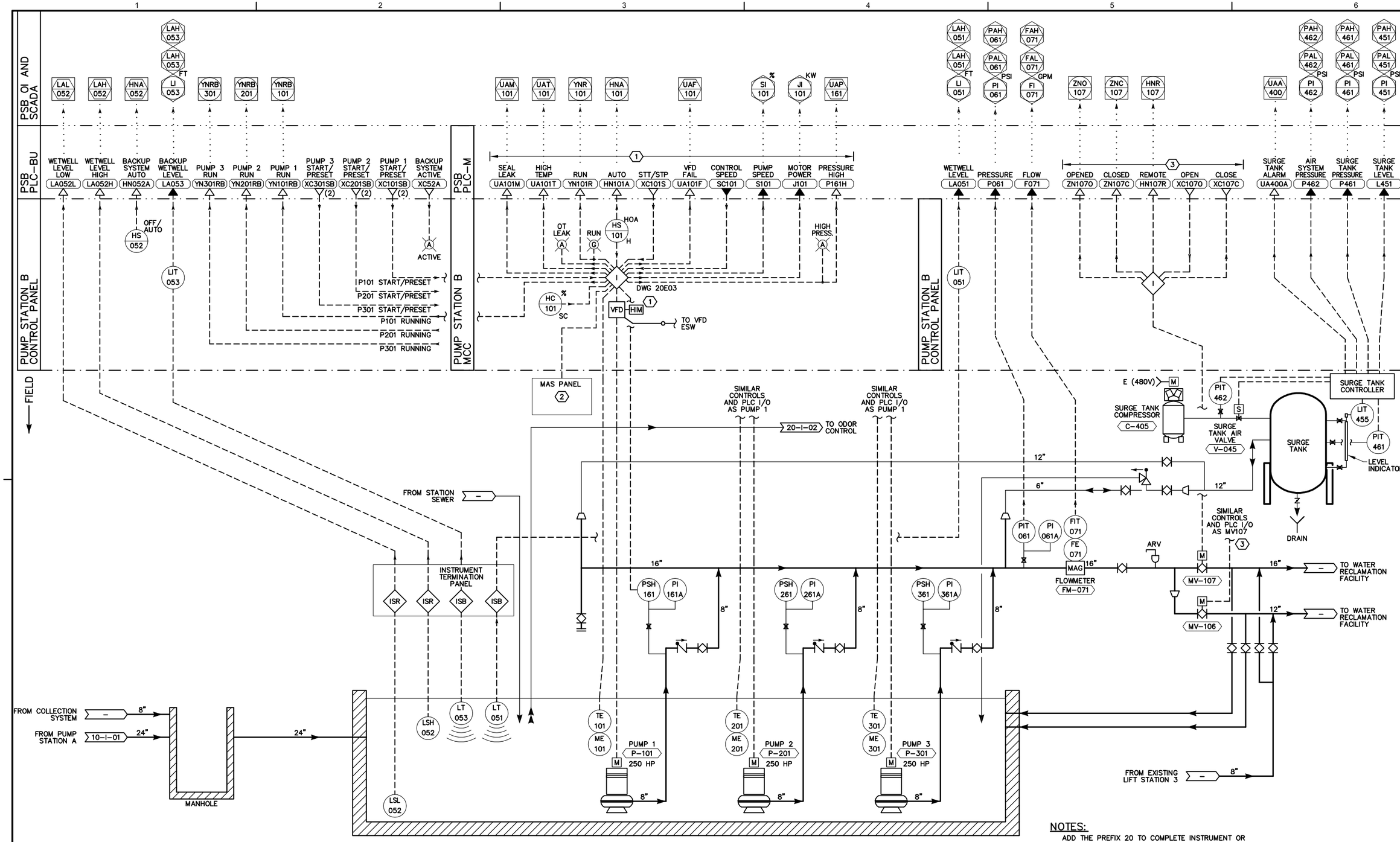

NOTES:

ADD THE PREFIX 20 TO COMPLETE INSTRUMENT OR EQUIPMENT TAG REFFERENCE ON THIS SHEET. EXAMPLE: P-20101 FOR PUMP 1

NOTES REFERENCED IN DRAWING:

1. TYPICAL I/O CONTROLS AND VFDS FOR ALL PUMPS
2. REMOTE MAS PANEL TYPICAL FOR ALL PUMPS.
3. TYPICAL I/O CONTROLS FOR ALL MOTORIZED VALVES.

REGISTERED PROFESSIONAL ENGINEER THOMAS P. FRISCH No. E15761 ELECTRICAL STATE OF CALIFORNIA

05/27/2020

PUMP STATION B P&ID

DESIGN T. FRISCH
DRAWN N. CONANT
CHECKED M. FRISCH
APPROVED M. FISHER

FRISCH ENGINEERING, INC.
CONSULTING ELECTRICAL ENGINEERS
13405 FOLSOM BLVD, UNIT 600
FOLSOM, CA 95630
PH 916 353 1025
WWW.FRISCHENGINEERING.COM
FILE: 17-082-PS-B.DWG
DATE: JUN 03, 2020 TIME: 10:30:25AM

WATERWORKS ENGINEERS
2260 Douglas Blvd, Suite 150 • Roseville, CA 95661 • 916-780-2888

CITY OF MORRO BAY
WATER RECLAMATION FACILITY
LIFT STATON AND OFFSITE PIPELINES

INSTRUMENTATION
PUMP STATION B P&ID

DATE MAY 2020
PROJECT NUMBER 17-082
DRAWING NUMBER 20-I-01
SHEET NUMBER 213

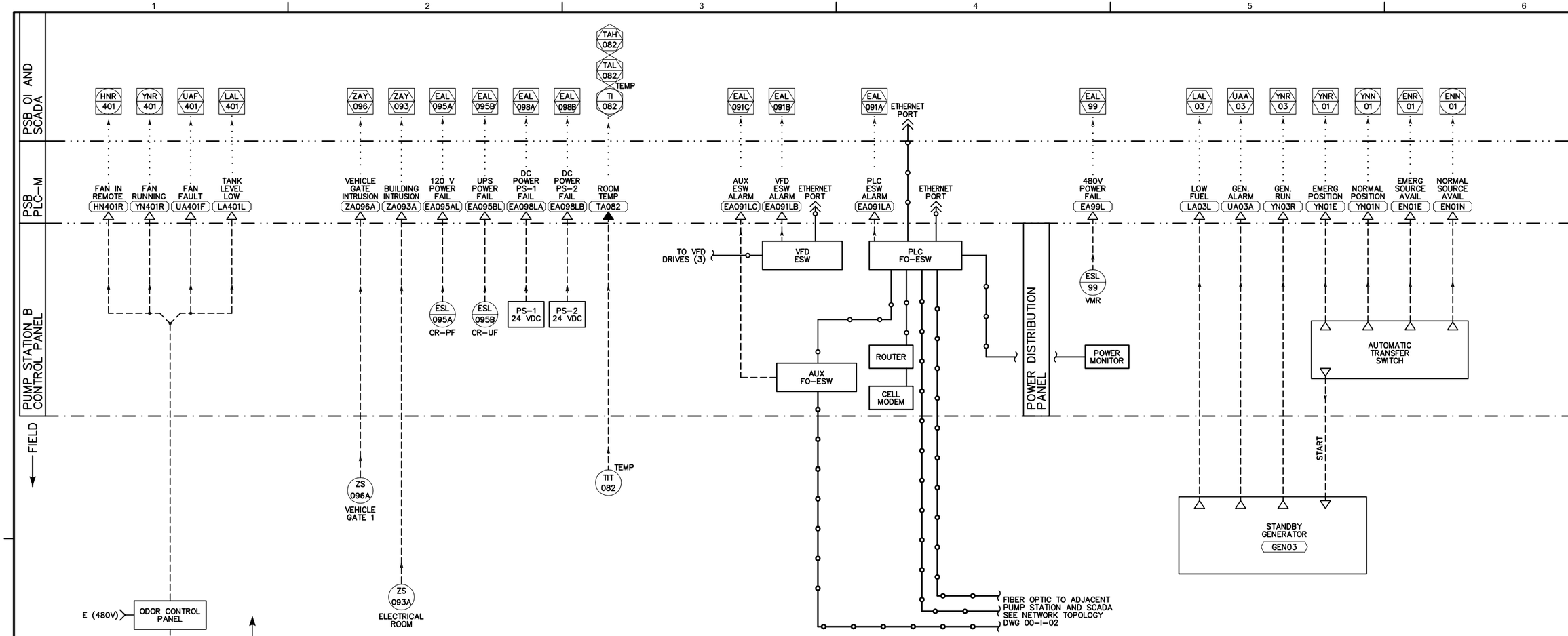

ODOR CONTROL SYSTEM P&ID

INTRUSION ALARM P&ID

COMMUNICATIONS P&ID

BACK-UP POWER P&ID

NOTES:

ADD THE PREFIX 20 TO COMPLETE INSTRUMENT OR EQUIPMENT TAG REFFERENCE ON THIS SHEET. EXAMPLE: P-20401 FOR ODOR CONTROL

NOTES REFERENCED IN DRAWING:

1. TYPICAL I/O CONTROLS FOR ALL HVAC UNITS

REGISTERED PROFESSIONAL ENGINEER THOMAS P. FRISCH No. E15761 ELECTRICAL STATE OF CALIFORNIA

05/27/2020

DESIGN T. FRISCH
DRAWN N. CONANT
CHECKED M. FRISCH
APPROVED M. FISHER

FRISCH ENGINEERING, INC.
CONSULTING ELECTRICAL ENGINEERS
13405 FOLSOM BLVD, UNIT 600
FOLSOM, CA 95630
PH 916 353 1025
WWW.FRISCHENGINEERING.COM
CA LICENSE 21815

FILE: 17-082-20-I-02.DWG
DATE: MAY 29, 2020 TIME: 2:11:21:06PM

WATERWORKS ENGINEERS
2260 Douglas Blvd, Suite 150 • Roseville, CA 95661 • 916-780-2888

CITY OF MORRO BAY
WATER RECLAMATION FACILITY
LIFT STATON AND OFFSITE PIPELINES

INSTRUMENTATION
PUMP STATION B
MISCELLANEOUS P&ID

DATE MAY 2020
PROJECT NUMBER 17-082
DRAWING NUMBER 20-I-02
SHEET NUMBER 214

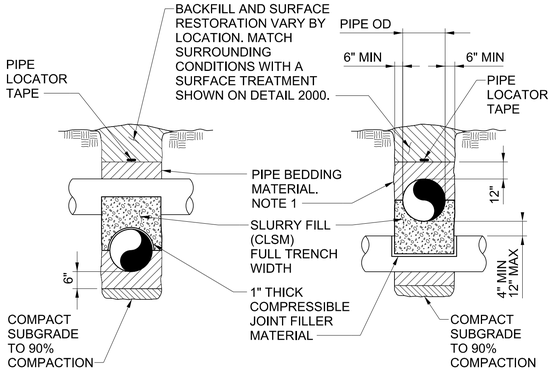

NOTES:

1. PIPE BEDDING SHALL BE GRANULAR BEDDING FOR ALL DUCTILE IRON OR STEEL PIPE AND SAND FOR ALL OTHER PIPE,COMPACT TO 90% RELATIVE COMPACTION. ALTERNATELY, SLURRY FILL MAY BE USED FOR PIPE BEDDING. TAKE PRECAUTIONS TO PREVENT PIPE FLOATING.
2. COMPACT ALL TRENCH BACK FILL (COMMON FILL AND SELECT FILL) TO 90% COMPACTION MORE THAN 2-FEET BELOW GRADE; 95% COMPACTION LESS THAN 2-FEET BELOW GRADE.
3. PROVIDE MINIMUM 3-FEET OF COVER OVER ALL BURIED PIPELINES, UNLESS OTHERWISE NOTED.

VERTICAL PROXIMITY PIPE CROSSING

NTS

2055

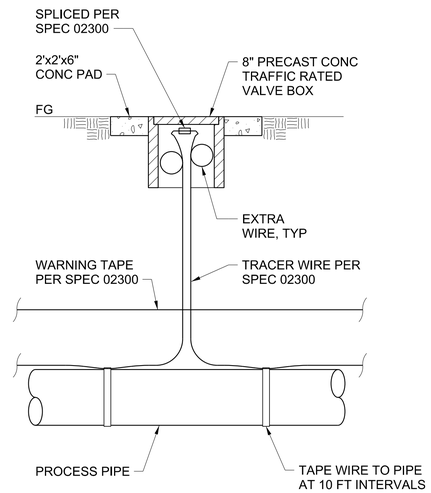

TRACER WIRE WITH TEST STATION

NTS

2060

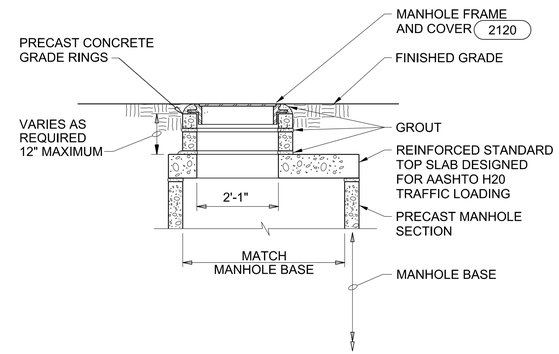

FLAT TOP MANHOLE

NTS

2112

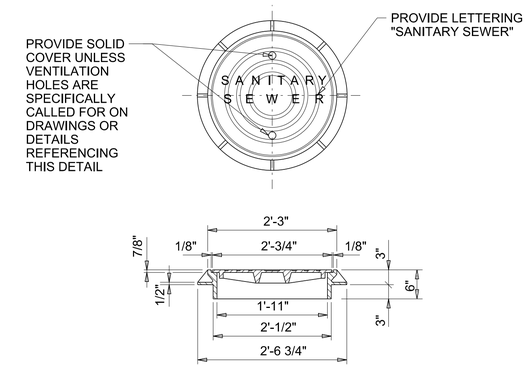

NOTES:

1. FRAME AND COVER SHALL BE CAST IRON.
2. FRAME AND COVER SHALL BE RATED FOR AASHTO H-20 TRAFFIC LOADS.

STANDARD MANHOLE FRAME AND COVER

NTS

2120

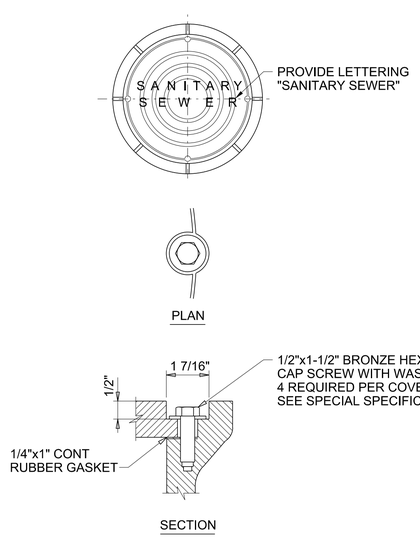

NOTES:

1. WATERTIGHT MANHOLE FRAME AND COVER 2120 , EXCEPT AS SHOWN.
2. NO HOLES SHALL BE ALLOWED IN WATERTIGHT MANHOLE COVER.

WATER TIGHT MANHOLE FRAME AND COVER

NTS

2121

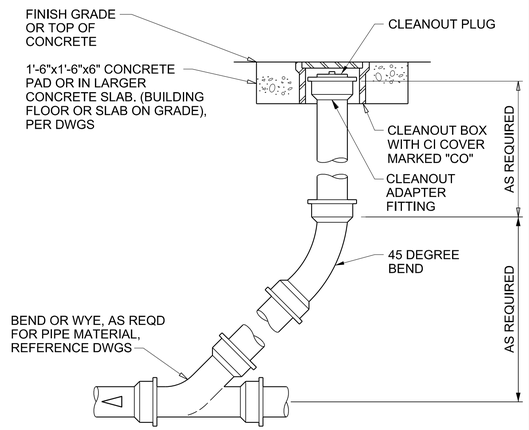

DRAIN LINE CLEANOUT

NTS

2130

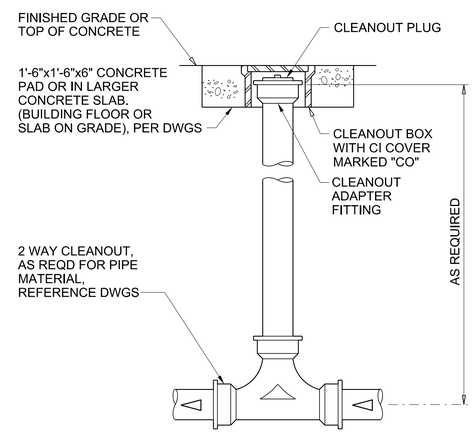

TWO WAY DRAIN LINE CLEANOUT

NTS

2132

DESIGNED K ALACOM
DRAWN J MARTIN
CHECKED K ALACOM
APPROVED M FISHER

WATERWORKS ENGINEERS
2260 Douglas Blvd., Suite 105 • Roseville, CA 95661 • 916-780-2888

CITY OF MORRO BAY
WATER RECLAMATION FACILITY
LIFT STATIONS AND OFFSITE PIPELINES

STANDARD DETAILS

STANDARD DETAILS

REGISTERED PROFESSIONAL ENGINEER
KRISTINA P. ALCOM
No. C70952
CIVIL
STATE OF CALIFORNIA
05-29-2020

DATE MAY 2020
PROJECT NUMBER 17-082
DRAWING NUMBER SD-1
SHEET NUMBER 215

FILENAME: 1782D-SD801.dgn PLOT DATE: 5/23/2020 10:25:16 AM

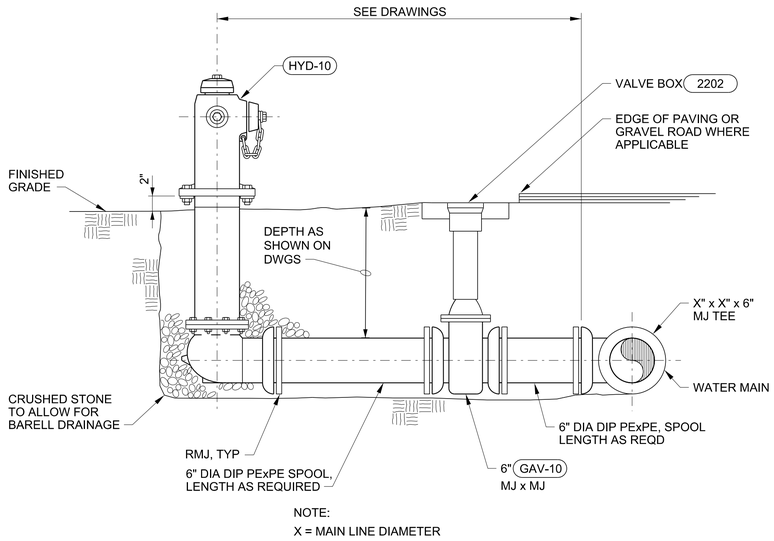

FIRE HYDRANT ASSEMBLY

NTS

2200

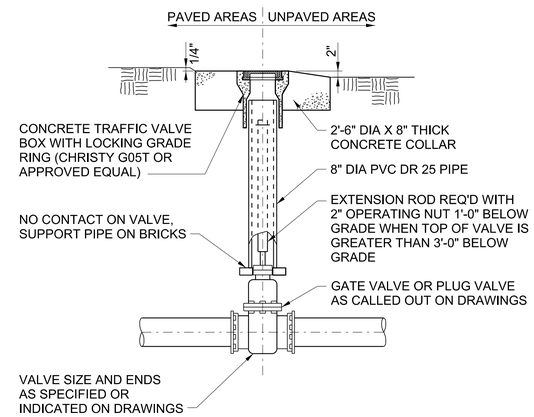

BURIED GATE OR PLUG VALVE BOX, TYPE 2

NTS

2203

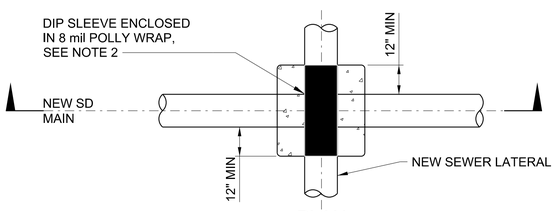

PLAN

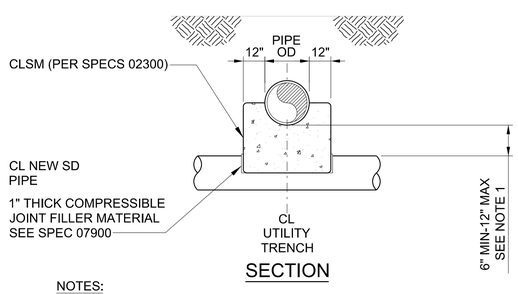

SECTION

NOTES:

1. WHERE VERTICAL CLEARANCE IS LESS THAN 12", UTILIZE DIP SLEEVE.
2. UTILIZE NEXT NORMAL SLEEVE SIZE OVER NORMAL SS SIZE.
3. WHERE VERTICAL CLEARANCE IS LESS THAN 6", CONTACT CITY REP FOR AUTHORIZATION TO UTILIZE THIS DETAIL.

UTILITY CROSSING

NTS

2210

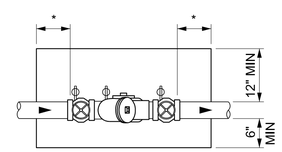

* TO BE OF ADEQUATE DISTANCE TO ALLOW ACCESS FOR MAINTENANCE, TESTING OR REMOVAL OF BACKFLOW DEVICE.

MINIMUM CLEARANCES

(SIZES 3/4"-2")

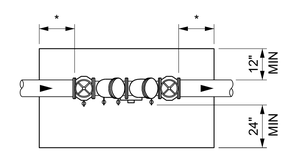

* TO BE OF ADEQUATE DISTANCE TO ALLOW ACCESS FOR MAINTENANCE, TESTING OR REMOVAL OF BACKFLOW DEVICE.

MINIMUM CLEARANCES

(SIZES 3" AND LARGER)

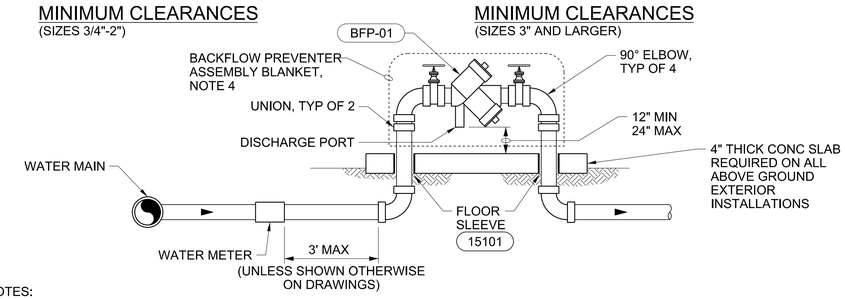

NOTES:

1. ALL BACKFLOW DEVICES SHALL BE INSPECTED AND TESTED UPON INITIAL INSTALLATION BY A CERTIFIED BACKFLOW TESTER (AWWA OR ABPA).
2. NO OUTLET, TAP, TEE OR CONNECTION BETWEEN THE WATER MAIN AND BACKFLOW PREVENTOR IS ALLOWED.
3. ALL ABOVE GROUND PIPING INSTALLATIONS, 2" AND SMALLER SHALLBE RIGID COPPER OR BRASS PIPE AND ALL 3" AND LARGER SHALL BE DUCTILE IRON PIPE WITH FLANGED FITTINGS.
4. PROVIDE VINYL COATED OR POLYMERIC RESIN COATED POLYESTER BLANKET SPECIFICALLY DESIGNED FOR BACKFLOW PREVENTER ASSEMBLIES. MINIMUM R-VALUE OF R-30. BACKFLOW BLANKET, OR EQUAL.

BACKFLOW PREVENTER ASSEMBLY (LESS THAN 4")

NTS

2245

DESIGNED K ALACOM
DRAWN J MARTIN
CHECKED K ALACOM
APPROVED M FISHER

WATERWORKS ENGINEERS
2260 Douglas Blvd., Suite 105 • Roseville, CA 95661 • 916-780-2888

CITY OF MORRO BAY
WATER RECLAMATION FACILITY
LIFT STATIONS AND OFFSITE PIPELINES

STANDARD DETAILS
STANDARD DETAILS

REGISTERED PROFESSIONAL ENGINEER
KRISTINA P. ALACOM
No. C70952
CIVIL
STATE OF CALIFORNIA
05-29-2020

DATE MAY 2020
PROJECT NUMBER 17-082
DRAWING NUMBER SD-2
SHEET NUMBER 216

FILENAME: 1782D-SD801.dgn PLOT DATE: 5/23/2020 10:24:10 AM

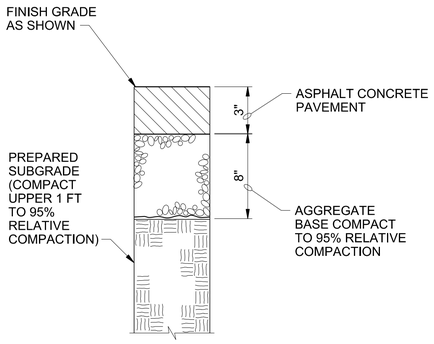

ASPHALT CONCRETE PAVEMENT (2501)

NTS

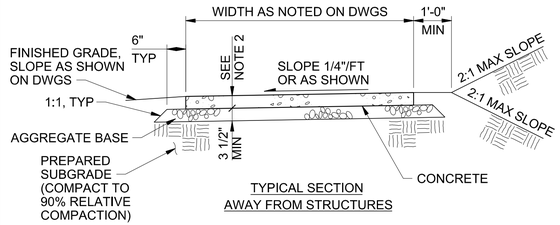

TYPICAL SECTION AWAY FROM STRUCTURES

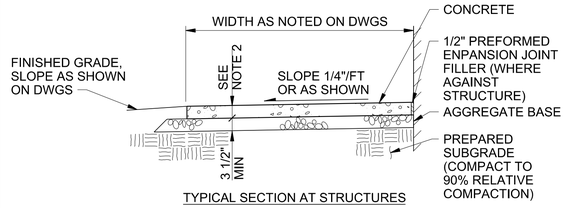

TYPICAL SECTION AT STRUCTURES

NOTES:

1. SIDEWALKS 8 FEET AND WIDER SHALL HAVE A LONGITUDINAL CONTRACTION JOINT AT THE MIDPOINT. PROVIDE LATERAL CONTRACTION JOINTS AT EQUAL SPACING, NO MORE THAN 5'-0" BETWEEN JOINTS.
2. CONCRETE DEPTH FOR STANDARD SIDEWALKS SHALL BE NOMINAL 3 1/2" MINIMUM, THICKNESS IN DRIVEWAY SHALL BE 5 1/2" MINIMUM.

CONCRETE SIDEWALK (2503)

NTS

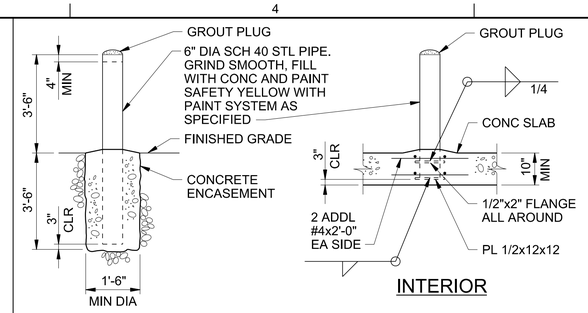

EXTERIOR

INTERIOR

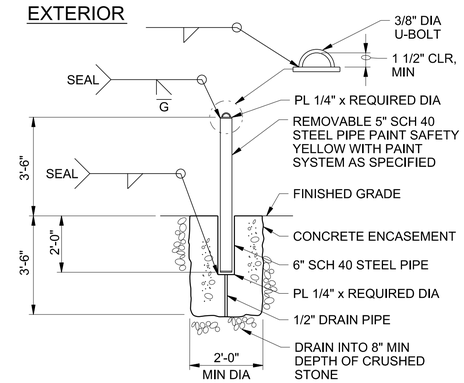

REMOVABLE

GUARD POST (2600)

NTS

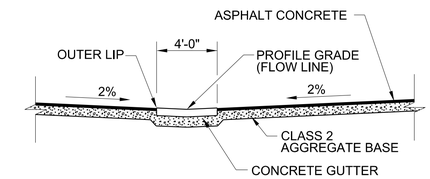

TYP. CROSS SECTION

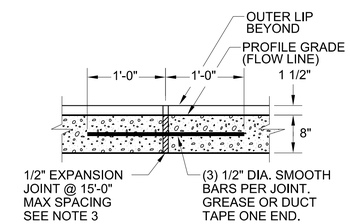

EXPANSION JOINT DETAIL

NOTES

1. ALL WORK AND MATERIALS SHALL CONFORM TO THE PROJECT SPECIFICATIONS.
2. SURFACING AND BASE THICKNESS SHALL BE DETERMINED IN ACCORDANCE WITH PROJECT SPECIFICATIONS OR AS DIRECTED BY THE ENGINEER.
3. 1/2-INCH, PRE-MOLDED EXPANSION JOINT MATERIAL SHALL BE HELD FIRMLY IN PLACE PRIOR TO PLACING CONCRETE.

TYPICAL CONCRETE SWALE (2720)

NTS

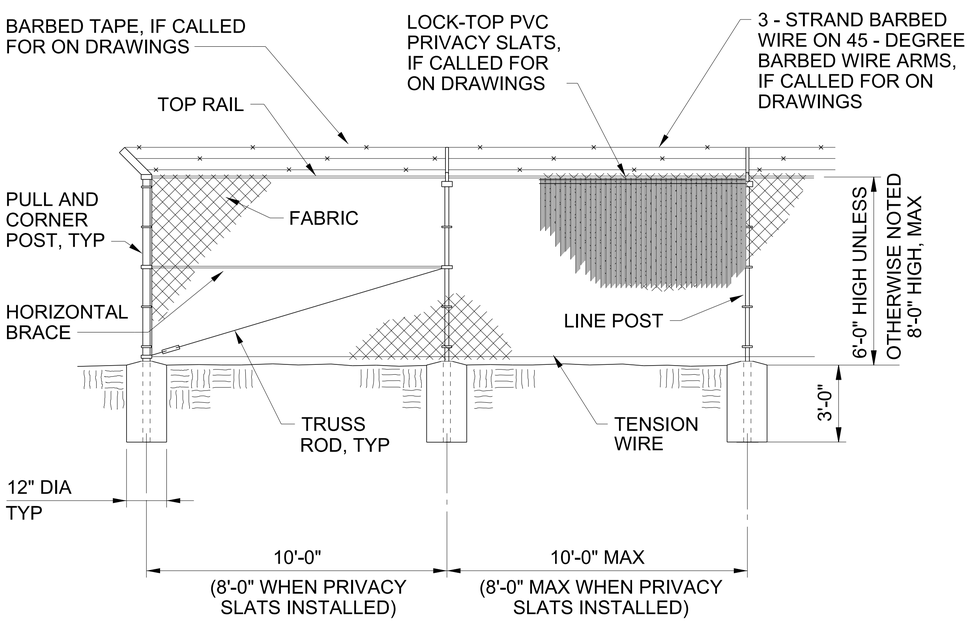

CHAINLINK FENCE (2800)

NTS

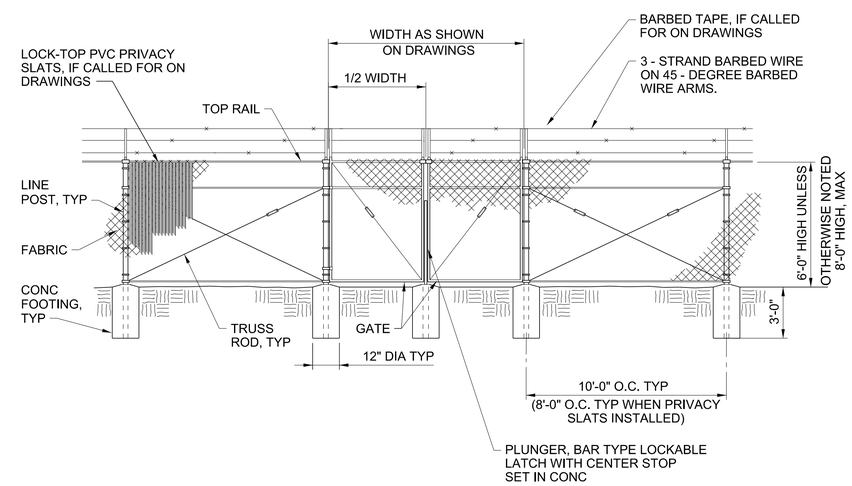

CHAINLINK DOUBLE-LEAF GATE (2801)

NTS

REGISTERED PROFESSIONAL ENGINEER ANDREW L. UNDERMAN No. C88058 CIVIL STATE OF CALIFORNIA
05-29-2020

DESIGNED K ALACOM
DRAWN J MARTIN
CHECKED K ALACOM
APPROVED M FISHER

WATERWORKS ENGINEERS
2260 Douglas Blvd., Suite 105 • Roseville, CA 95661 • 916-780-2888

CITY OF MORRO BAY
WATER RECLAMATION FACILITY LIFT STATIONS AND OFFSITE PIPELINES

STANDARD DETAILS
STANDARD DETAILS

DATE MAY 2020
PROJECT NUMBER 17-082
DRAWING NUMBER SD-3
SHEET NUMBER 217

FILENAME: 1782D-SD801.dgn PLOT DATE: 5/23/2020 10:29:02 AM

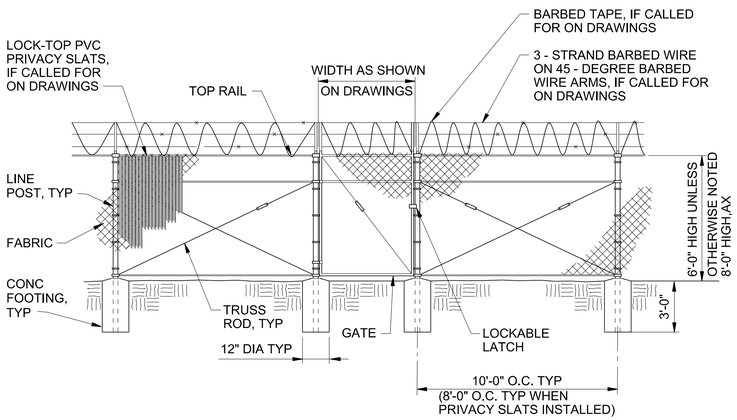

CHAINLINK SINGLE-LEAF GATE

NTS

2802

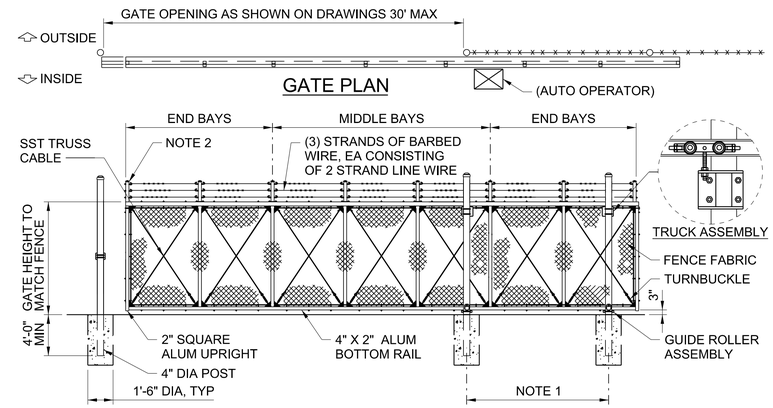

GATE ELEVATION - 7 BAYS SHOWN
(RH OPENING SHOWN - LH OR RH CAPABLE)

NOTES:

1. GATE MOUNTING POSTS SHALL BE SPACED IN ACCORDANCE WITH MANUFACTURE'S GUIDLINES.
2. SMOOTH LEADING EDGE. (NO PROTRUSIONS EXCEEDING .05" PER ASTM F2200).

CANTILIEVER GATE FOR CHAINLINK FENCE

NTS

2807

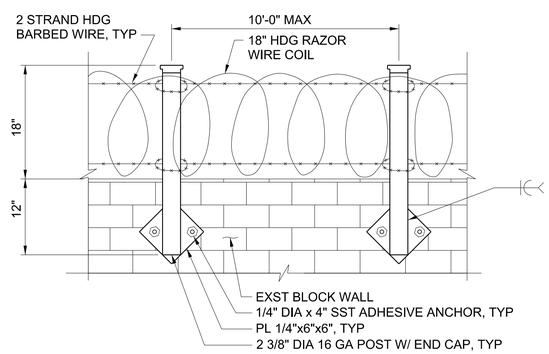

NOTES:

1. HOT DIP GALVANIZE POST BRACKET AFTER FABRICATION.

RAZOR WIRE ON BLOCK WALL

NTS

2808

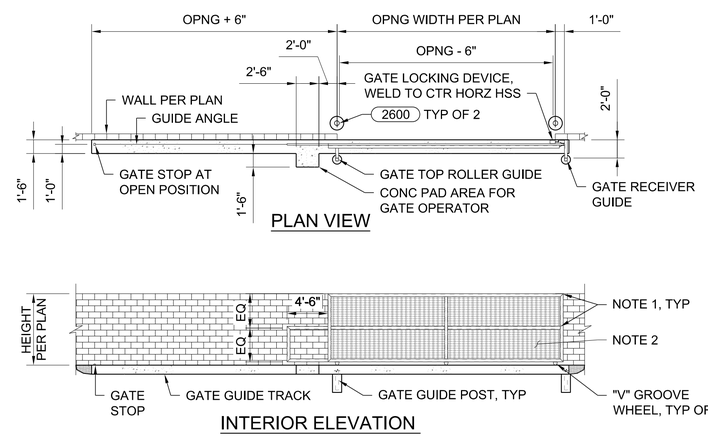

NOTES:

1. HSS2x4x1/4 FRAME, MITER CORNERS AND FULLY WELD ALL JOINTS. COORDINATE GATE WIDTH WITH HARDWARE TO PROPERLY FIT IN THE ROUGH OPENING. GRIND SMOOTH ALL SHARP CORNERS.
2. 1 1/2" DEEP 18 GAUGE PERFORATED / CORRUGATED METAL PANEL WITH 1/4" DIAMETER PERFORATIONS AT 1/2" CENTERS. WELD TO SUPPORTING FRAME AS SHOWN IN THE DETAILS.
3. PAINT ENTIRE GATE ASSEMBLY AFTER FABRICATION USING SYSTEM 300, COLOR SELECTED BY OWNER.
4. FOR ADDITIONAL CONNECTION DETAILS SEE 2819 .

STEEL ROLLING GATE

NTS

1 OF 3

2815

REGISTERED PROFESSIONAL ENGINEER
ARGENTINA P. ALACOM
No. C70952
CIVIL
STATE OF CALIFORNIA
05-29-2020

DESIGNED K ALACOM
DRAWN J MARTIN
CHECKED K ALACOM
APPROVED M FISHER

WATERWORKS ENGINEERS
2260 Douglas Blvd., Suite 105 • Roseville, CA 95661 • 916-780-2888

CITY OF MORRO BAY
WATER RECLAMATION FACILITY
LIFT STATIONS AND OFFSITE PIPELINES

STANDARD DETAILS

STANDARD DETAILS

DATE MAY 2020
PROJECT NUMBER 17-082
DRAWING NUMBER SD-4
SHEET NUMBER 218

FILENAME: 1782D-SD801.dgn PLOT DATE: 5/26/2020 3:48:15 PM

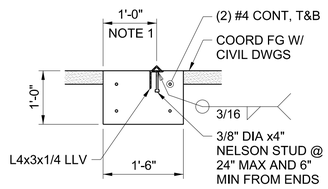

NOTES:

1. COORDINATE WHEEL TRACK LOCATION W/ GATE MFR FOR PRECISE ASSEMBLY. CONSTRUCT TRACK W/ L1 1/2x1 1/2x1/4 ANGLE WELDED TO L4x3, BUTT WELD AND GRIND SMOOTH ALL JOINTS.

GATE GUIDE TRACK

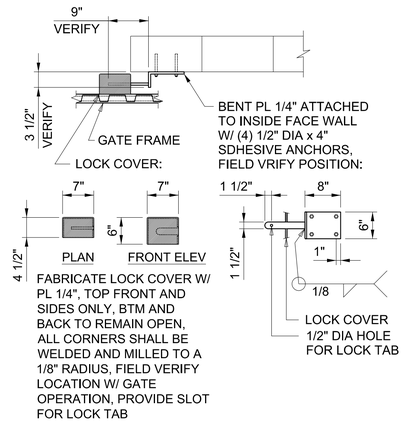

GATE LOCKING DEVICE

STEEL ROLLING GATE

NTS

2815

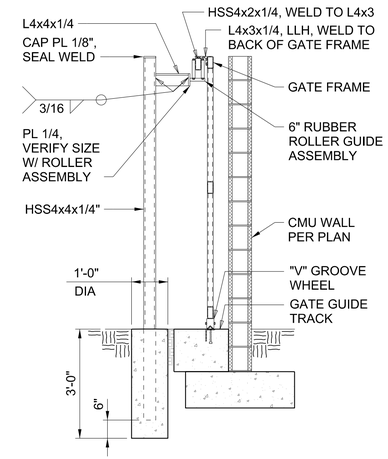

GATE TOP ROLLER GUIDE

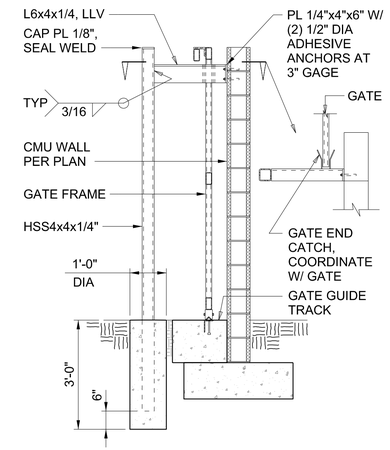

GATE RECEIVER GUIDE

STEEL ROLLING GATE

NTS

2815

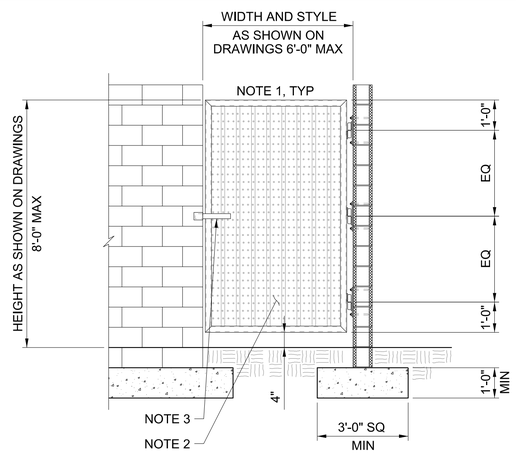

ELEVATION

NOTES:

1. HSS2 1/2x2 1/2x3/16 FRAME, MITER CORNERS AND FULLY WELD ALL JOINTS. COORDINATE GATE WIDTH WITH HARDWARE TO PROPERLY FIT IN THE ROUGH OPENING. GRIND SMOOTH ALL SHARP CORNERS.
2. 1 1/2" DEEP 18 GAUGE PERFORATED / CORRUGATED METAL PANEL WITH 1/4" DIAMETER PERFORATIONS AT 1/2" CENTERS. WELD TO SUPPORTING FRAME AS SHOWN IN THE DETAILS.
3. SLIDE BOLT, LOCATE INSIDE OR OUTSIDE GATE AS DIRECTED BY OWNER.
4. PAINT ENTIRE GATE ASSEMBLY AFTER FABRICATION USING SYSTEM 300, COLOR SELECTED BY OWNER.
5. FOR ADDITIONAL CONNECTION DETAILS SEE 2819 .

STEEL SINGLE-LEAF GATE

NTS

2817

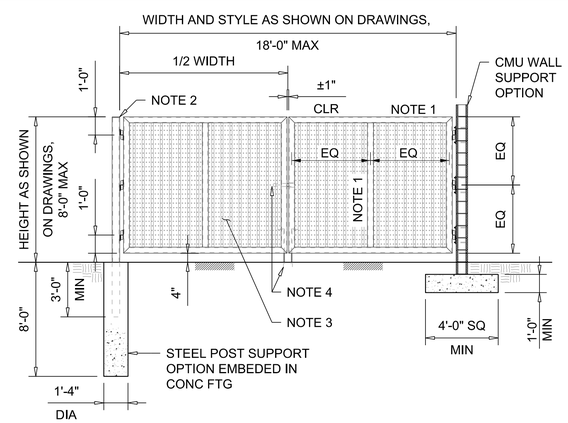

ELEVATION

NOTES:

1. HSS2 1/2x2 1/2x3/16 FRAME, MITER CORNERS AND FULLY WELD ALL JOINTS. COORDINATE GATE WIDTH WITH HARDWARE TO PROPERLY FIT IN THE ROUGH OPENING. GRIND SMOOTH ALL SHARP CORNERS.
2. 1 1/2" DEEP 18 GAUGE PERFORATED / CORRUGATED METAL PANEL WITH 1/4" DIAMETER PERFORATIONS AT 1/2" CENTERS. WELD TO SUPPORTING FRAME AS SHOWN IN THE DETAILS.
3. SLIDE BOLT, LOCATE INSIDE OR OUTSIDE GATE AS DIRECTED BY OWNER.
4. PAINT ENTIRE GATE ASSEMBLY AFTER FABRICATION USING SYSTEM 300, COLOR SELECTED BY OWNER.
5. FOR ADDITIONAL CONNECTION DETAILS SEE 2819 .

STEEL DOUBLE-LEAF GATE

NTS

2818

DESIGNED K ALACOM
DRAWN J MARTIN
CHECKED K ALACOM
APPROVED M FISHER

WATERWORKS ENGINEERS
2260 Douglas Blvd., Suite 105 • Roseville, CA 95661 • 916-780-2888

CITY OF MORRO BAY
WATER RECLAMATION FACILITY
LIFT STATIONS AND OFFSITE PIPELINES

STANDARD DETAILS

STANDARD DETAILS

REGISTERED PROFESSIONAL ENGINEER
KRISTINA P. ALACOM
No. C70952
CIVIL
STATE OF CALIFORNIA
05-29-2020

DATE	MAY 2020
PROJECT NUMBER	17-082
DRAWING NUMBER	SD-5
SHEET NUMBER	219

FILENAME: 1782D-SD801.dgn PLOT DATE: 5/23/2020 11:02:10 AM

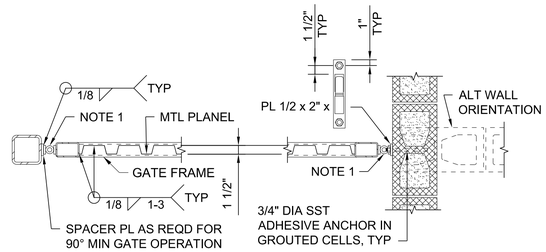

STEEL POST SUPPORT OPTION

CMU WALL SUPPORT OPTION

NOTES:

1. PROVIDE WELD-ON BARREL GATE HINGE W/ 3/4" DIA SST HINGE PIN WHICH PIVOTS ON A BALL BEARING AND FEATURES A "ZERC" TYPE GREASE FITTING. WELDABLE PLATES SHALL BE A MINIMUM OF 3/8"x1 1/2"x3".

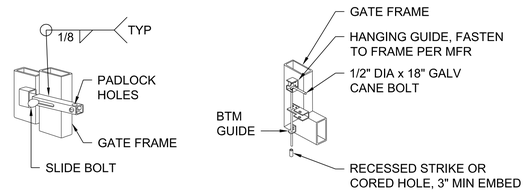

SLIDE BOLT

CANE BOLT

STEEL GATE DETAILS

NTS

2819

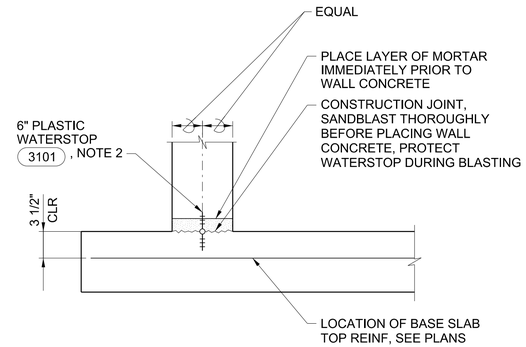

NOTES:

1. FOR WALLS WITH SINGLE MAT OF REINFORCING LOCATE WATERSTOP ON LIQUID FACE, 1" CLEAR OF REINFORCEMENT.
2. SECURE WATERSTOP IN-PLACE AS SPECIFIED.

WALL BASE CONSTRUCTION JOINT

NTS

3154

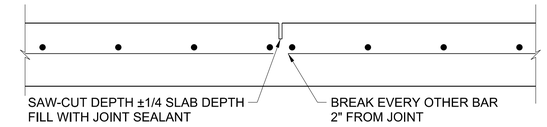

NOTES:

1. SAW-CUT SAME DAY AS POUR AS SOON AS SPALLING WILL NOT OCCUR.
2. CONTRACTOR SHALL USE STRING LINE OR OTHER POSITIVE MEANS TO PLACE REINFORCING AND LOCATE SAWCUT.
3. BREAK REINF AND ADD SPLICE BARS SIMILAR AT DOUBLE MAT.
4. 3/8" TOOLED JOINT MAY BE USED IN PLACE OF SAWN JOINT.

SLAB ON GRADE SAWN JOINT, TYPE A

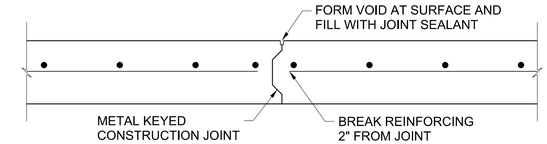

SLAB ON GRADE CONSTRUCTION JOINT, TYPE B

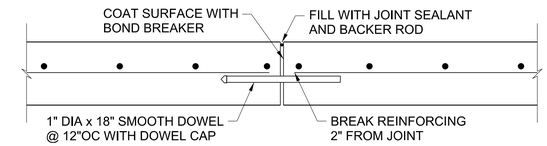

SLAB ON GRADE CONSTRUCTION JOINT, TYPE C

CONC SLAB ON GRADE JOINTS

NTS

3160

NOTES:

1. PAD SIZE SHALL BE MINIMUM INDICATED OR AS SHOWN ON THE DRAWINGS OR AS INDICATED BY THE MANUFACTURER AND APPROVED BY THE ENGINEER.
2. THE SIZE, NUMBER, TYPE, LOCATION, AND THREAD PROJECTION OF THE ANCHOR BOLTS SHALL BE DETERMINED BY THE EQUIPMENT MANUFACTURER, AND SHALL BE AS APPROVED BY THE ENGINEER. ANCHOR BOLTS SHALL BE HELD IN POSITION WITH A ONE PIECE TEMPLATE, MATCHING THE BASE PLATE, WHILE PAD IS BEING POURED.
3. ANCHOR BOLT SLEEVES SHALL BE USED TO PROVIDE THE ANCHOR BOLT A MINIMUM MOVEMENT OF 1/2" IN ALL DIRECTIONS. THE MINIMUM SLEEVE LENGTH SHALL BE 8 TIMES THE BOLT DIAMETER. SLEEVES SHALL BE FILLED WITH NON-SHRINK GROUT.
4. ANCHOR BOLT SLEEVES SHALL HAVE A MINIMUM INTERNAL DIAMETER 1" GREATER THAN BOLT DIAMETER AND A MAXIMUM INTERNAL DIAMETER 3" GREATER THAN ANCHOR BOLT DIAMETER. SLEEVES SHALL BE FILLED WITH NON-SHRINK GROUT.
5. EQUIPMENT BASES SHALL BE INSTALLED LEVEL UNLESS SPECIFIED OTHERWISE.
6. TYPE "D" DETAIL SHALL BE USED ONLY FOR SLABS ON GRADE AND AT GRADE. THE SURROUNDING FLOOR SLAB SHALL NOT BE PLACED UNTIL THE EXACT SIZE AND LOCATION OF THE PAD IS KNOWN.
7. WEDGES OR SHIMS SHALL BE USED TO SUPPORT THE BASE WHILE THE NON-SHRINK GROUT IS PLACED. TEMPORARY LEVELING NUTS SHALL BE BACKED OFF. IF LEFT IN, THE WEDGES OR SHIMS SHALL NOT BE EXPOSED TO VIEW.
8. HEIGHT OF PADS SHALL BE MINIMUM REQUIRED FOR ANCHOR BOLT CLEARANCE TO KEEP ANCHOR BOLT OUT OF SLAB (SEE TABLE BELOW). WHERE EQUIPMENT OR PIPING ELEVATION REQUIRE A PAD HEIGHT LESS THAN THE MINIMUM SHOWN, USE TYPE B WITH BLOCKOUT.

AB DIA (IN.)	1/2	5/8	3/4	7/8	1	1 1/4	1 3/8	1 1/2	1 3/4	2
MIN PAD HT (IN.)	7	8 1/2	10	11	12 1/2	15	16 1/2	18	21	24

9. TYPE "F" PADS MAY BE SUBSTITUTED FOR TYPE "A" PADS FOR LOCATIONS APPROVED IN WRITING BY THE ENGINEER.

EQUIPMENT PAD NOTES

NTS

3200

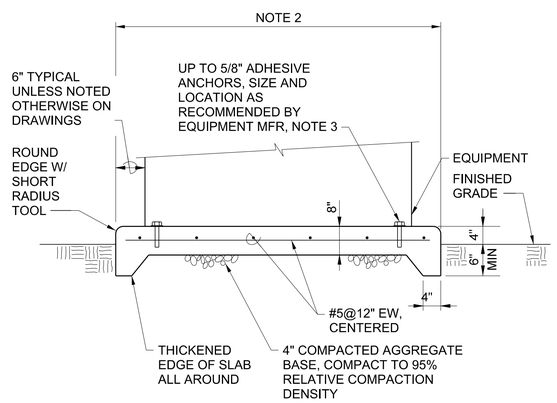

NOTES:

1. SEE 3200 FOR GENERAL EQUIPMENT PAD NOTES.
2. EQUIPMENT PAD SIZE PER DRAWINGS. WHERE PAD SIZE IS NOT SHOWN, SIZE TO FIT EQUIPMENT.
3. IF ANCHOR BOLTS ARE CALLED OUT FOR ON DRAWINGS, PROVIDE ANCHOR BOLTS PER 3210 IN LIEU OF ADHESIVE ANCHORS.

EQUIPMENT PAD-TYPE D

NTS

3200D

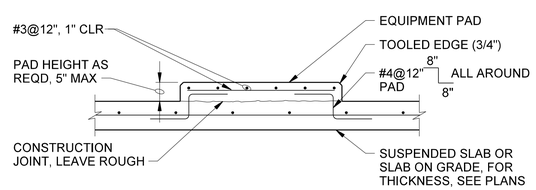

NOTES:

1. SEE 3200 FOR GENERAL EQUIPMENT PAD NOTES.

EQUIPMENT PAD-TYPE F

NTS

3200F

DESIGNED A LINDEMAN
DRAWN J MARTIN
CHECKED A LINDEMAN
APPROVED M FISHER

WATERWORKS ENGINEERS
2260 Douglas Blvd., Suite 105 • Roseville, CA 95661 • 916-780-2888

CITY OF MORRO BAY
WATER RECLAMATION FACILITY
LIFT STATIONS AND OFFSITE PIPELINES

STANDARD DETAILS

STANDARD DETAILS

REGISTERED PROFESSIONAL ENGINEER
ANDREW L. LINDEMAN
No. C88058
CIVIL
STATE OF CALIFORNIA
05-29-2020

DATE MAY 2020
PROJECT NUMBER 17-082
DRAWING NUMBER SD-6
SHEET NUMBER 220

FILENAME: 1782D-SD801.dgn PLOT DATE: 5/23/2020 11:03:39 AM

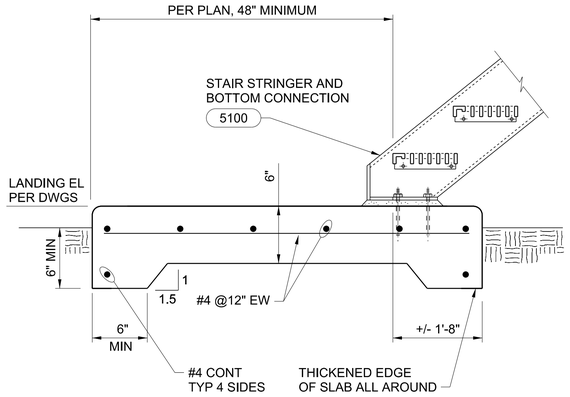

NOTE:

LANDING WIDTH MINIMUM OF CLEAR STAIR WIDTH PLUS 1'-0".

CONCRETE STAIR LANDING

NTS

3203

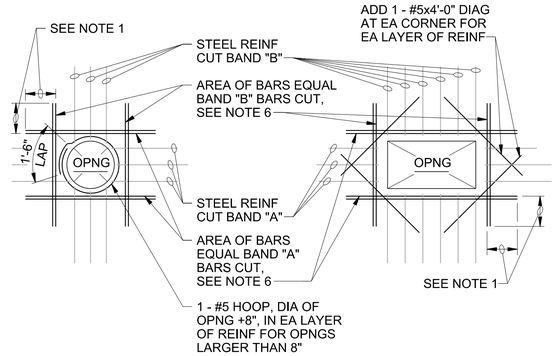

NOTES:

1. PROVIDE MINIMUM LAP, SEE GENERAL STRUCTURAL NOTES. WHERE FULL LAP LENGTH CANNOT BE ACHIEVED DUE TO SLAB OR WALL EDGE, TERMINATE BARS WITH A STANDARD 90 DEGREE BEND 2 INCHES CLEAR OF SLAB OR WALL EDGE. ROTATE HOOKS AS REQUIRED TO MAINTAIN CONCRETE COVER.
2. TYPICAL FOR ALL OPENINGS IN CONCRETE WALLS OF BELOW GRADE AND HYDRAULIC STRUCTURES AND ALL STRUCTURAL CONCRETE SLABS UNLESS INDICATED OTHERWISE ON PLANS.
3. DO NOT WELD REINFORCEMENT TO PIPE SLEEVES AND INSERTS.
4. PROVIDE A MINIMUM OF 2 "A" BARS AND 2 "B" BARS EACH SIDE OF OPENING (1 EACH FACE).
5. FOR OPENINGS LARGER THAN 8'-0", REINFORCE SAME AS FOR 8'-0" OPENINGS.
6. SPACE AT 3 BAR DIAMETERS (OR 3" MINIMUM) ON CENTER.

OPENING REINFORCING

NTS

3301

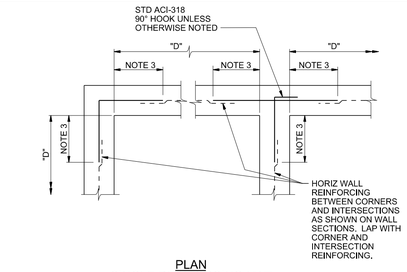

PLAN
SINGLE REINFORCING MAT

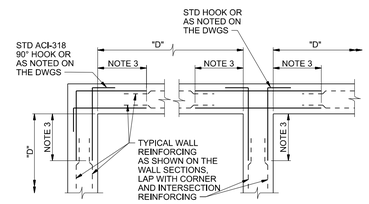

PLAN
DOUBLE REINFORCING MAT

NOTES:

1. TYPICAL HORIZONTAL WALL CORNER AND INTERSECTION REINFORCING LAYOUT IS SHOWN. FOR SIZE AND SPACING. SEE PLANS.
2. WHERE THE CORNER OR INTERSECTION REINFORCING SIZE AND SPACING IS NOT SHOWN, NOTED OR TABULATED ON THE PLANS. THE SIZE AND SPACING SHALL BE THE SAME AS THE WALL HORIZONTAL REINFORCING SHOWN ON THE WALL SECTIONS OR AS NOTED FOR THE REINFORCING BETWEEN THE CORNERS OR INTERSECTIONS.
3. EXCEPT WHERE OTHERWISE SHOWN ON THE DRAWINGS, THE LENGTH INDICATED AS "NOTE 3" SHALL BE THE LESSER OF D/4, 8 FEET, OR 1.0 TIMES THE HEIGHT OF THE WALL, EXCEPT THAT IN NO CASE SHALL IT BE LESS THAN 2.0 FEET.
4. D = LENGTH OF WALL PARALLEL TO THE BAR LENGTH IN QUESTION.
5. USE THE LAP LENGTH AS REQUIRED FOR THE SMALLER OF THE TWO REINFORCING BARS BEING SPLICED, SEE CONCRETE REINFORCING NOTES.

TYPICAL WALL CORNER AND INTERSECTION REINFORCING

NTS

3303

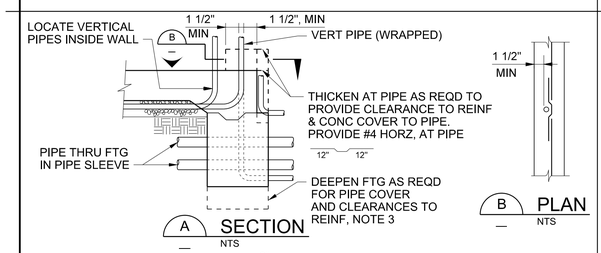

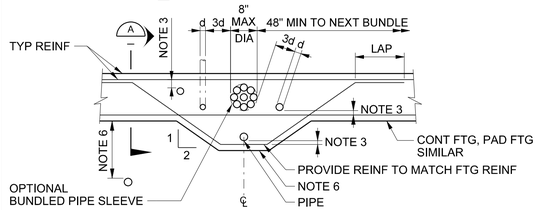

NOTES:

1. PIPE = ANY PENETRATION THRU OR EMBEDDED IN FOUNDATION.
2. ALL PIPES THROUGH FOOTINGS TO BE WRAPPED OR SLEEVED AS FOLLOWS:
   a. SLEEVES: PROVIDE 1" MIN CLR ALL AROUND O.D. PIPE TO I.D. SLEEVE, UNO.
   b. WRAPPED VERTICAL PIPES: PROVIDE 1/8" NOMINAL SHEET FOAM WITH (3) WRAPS MINIMUM,UNO.
   c. WRAPPED HORIZONTAL PIPES: PROVIDE 1/8" NOMINAL SHEET FOAM WITH (8) WRAPS MINIMUM,UNO.
   d. UNDERGROUND FIRE LINES 4" AND LARGER:
      a. SLEEVES: PROVIDE 2" MIN CLEAR ALL AROUND O.D. PIPE TO I.D. SLEEVE
      b. WRAPPED: PROVIDE 1/8" NOMINAL SHEET FOAM WITH (16) WRAPS MIN. WRAPPED & SLEEVED PIPES SHALL HAVE 1 1/2" MIN CLEAR TO REINF STEEL. MIN CONC COVER AT PIPES TO BE 3".
3. CLEARANCE BETWEEN PIPES TO BE 3d MIN TYP. WITH A MAXIMUM OF (8) PIPES PER 48". GROUPS OF PIPES MAY BE BUNDLED AS SHOWN, EXCEPT IN PAD FOOTINGS.
4. NO PIPE TO RUN PARALLEL IN FOOTINGS, STEM OR CURB. PVC CONDUIT (PIPE) EMBEDDED IN CURB/STEM MAY BE WIRED TIED TO HORIZ REINF.
5. NO HORIZONTAL PIPES ALLOWED THROUGH FOOTING WITH 2'-0" EACH SIDE OF HOLD-DOWNS OR STEEL COLUMNS. NO VERTICAL PIPES ALLOWED IN FOOTINGS AT BRACED FRAMES.
6. PROVIDE 18" MIN OF COMPACTED FILL ABOVE PIPES UP TO 12" DIA, FOR LARGER PIPES INCREASE COMPACTED FILL DEPTH 1'-0" FOR EACH 6" INCREASE IN PIPE DIAMETER. OTHERWISE DEEPEN THE FOOTING AS SHOWN.

PIPES THRU FOOTINGS

NTS

3305

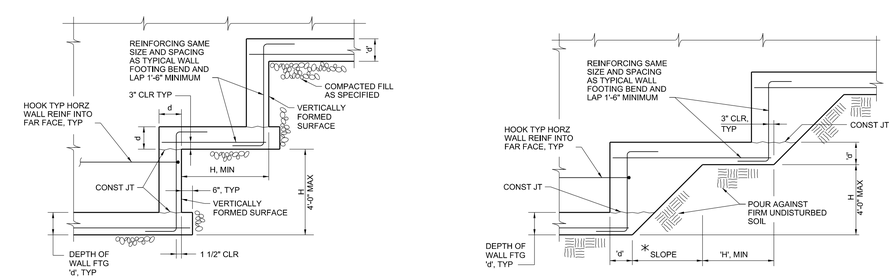

TYPE A

TYPE B

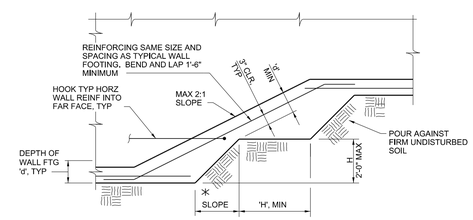

TYPE C

NOTE:

* WALL FOOTING SHOWN, MAT FOUNDATION SIMILAR, PROVIDE TOP AND BOTTOM REBAR MATS WHERE PRESENT

STEPPED FOOTING

NTS

3308

REGISTERED PROFESSIONAL ENGINEER ANDREW L. LINDEMAN No. C88058 CIVIL STATE OF CALIFORNIA
05-29-2020

DESIGNED A LINDEMAN
DRAWN J MARTIN
CHECKED A LINDEMAN
APPROVED M FISHER

WATERWORKS ENGINEERS
2260 Douglas Blvd., Suite 105 • Roseville, CA 95661 • 916-780-2888

CITY OF MORRO BAY
WATER RECLAMATION FACILITY
LIFT STATIONS AND OFFSITE PIPELINES

STANDARD DETAILS

STANDARD DETAILS

DATE MAY 2020
PROJECT NUMBER 17-082
DRAWING NUMBER SD-7
SHEET NUMBER 221

FILENAME: 1782D-SD801.dgn PLOT DATE: 5/23/2020 11:05:28 AM

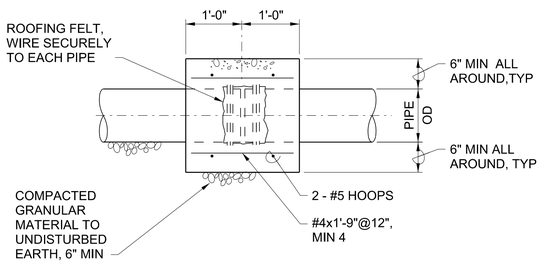

CONCRETE CLOSURE COLLAR

NTS

3323

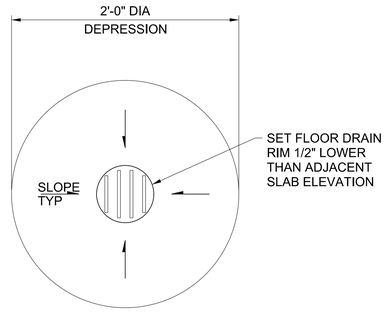

FLOOR DRAIN

NTS

3600

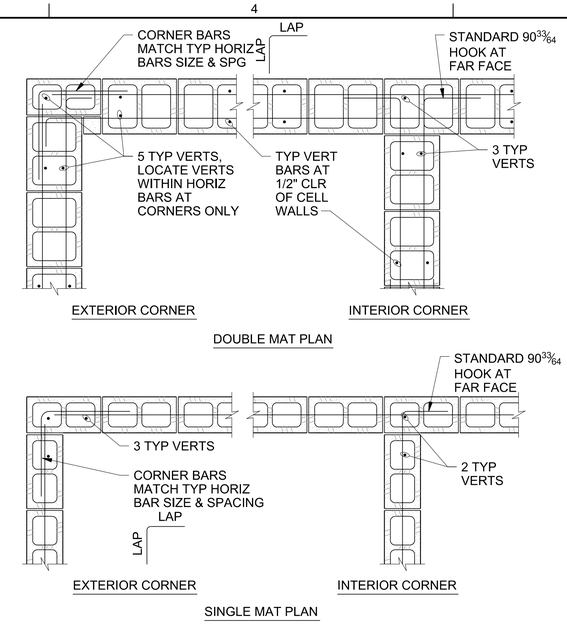

NOTES:

1. LAP=48 BAR DIAMETERS OR 2'-0" MINIMUM UNLESS OTHERWISE NOTED.
2. PROVIDE A STANDARD 90 33/64 HOOK EACH END ON ANY HORIZONTAL BAR BETWEEN OPENINGS, CONTROL JOINTS, OR CORNERS LESS THAN 6'-0" IN LENGTH.

CMU WALL CORNERS

NTS

4001

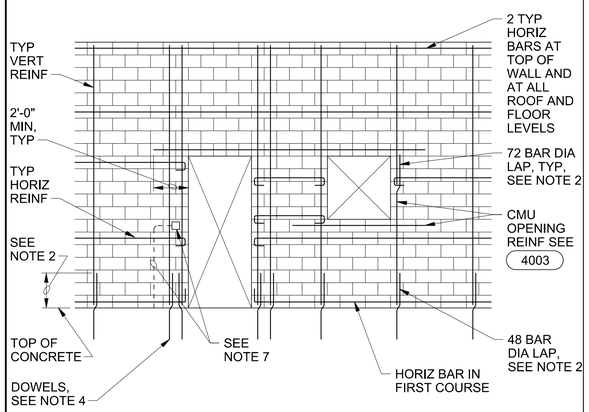

ELEVATION

NOTES:

1. FOR TYPICAL WALL REINFORCING, SEE WALL SECTIONS AND DETAILS FOR EACH FACILITY.
2. LAP VERTICAL REINFORCING WITH WALL DOWELS 48 BAR DIAMETERS (2'-0" MIN), LAP ALL OTHER VERTICAL BARS 72 BAR DIAMETERS.
3. STAGGER SPLICES IN ADJACENT HORIZONTAL BARS IN THE SAME COURSE BY 2'-0".
4. PROVIDE DOWEL BARS IN FOUNDATION TO MATCH ALL VERTICAL REINFORCING.
5. FOR ADDED REINFORCING AT WALL INTERSECTIONS AND CORNERS, SEE 4001
6. SOLID GROUT ALL CMU WALLS UNLESS NOTED OTHERWISE.
7. DO NOT PLACE VERTICAL CONDUIT IN THE SAME CELL AS VERTICAL REINFORCING.

REINFORCED CMU WALL

NTS

4002

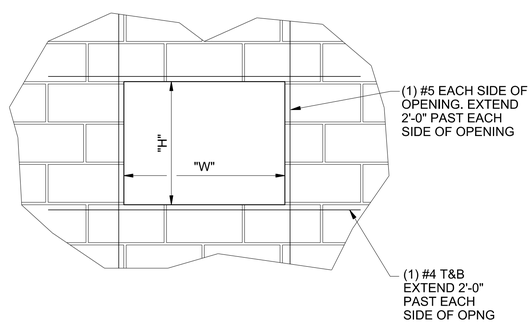

NOTES:

1. THIS DETAIL APPLICABLE WHERE OPNG LESS THEN 3'-0" IN ANY DIMENSION. SEE DETAIL 4004 FOR LARGER OPENINGS.
2. TERMINATE HORZ REINF WITH 180° HOOK AT WALL ENDS AND CMU CONTROL JOINTS PER DETAIL.

CMU OPENINGS LESS THAN 3'-0"

NTS

4003

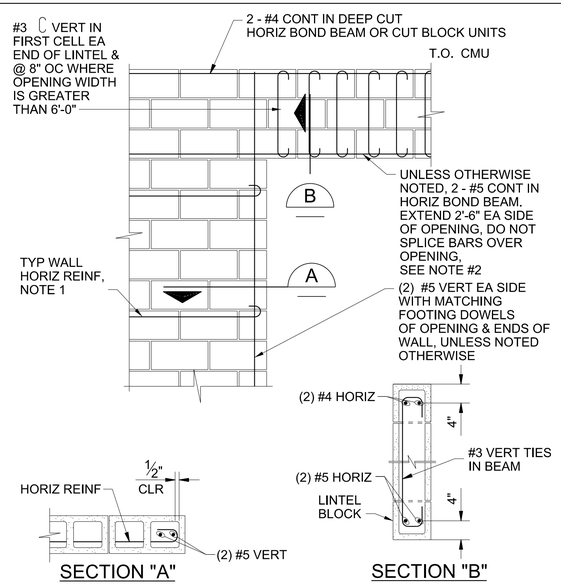

NOTES:

1. TERMINATE HORIZ REINF WITH 180° HOOK AT WALL ENDS , JAMB OPENINGS AND CMU CONTROL JOINTS.
2. PLACE (2) #5 HORIZ AT WINDOW SILLS , SIM TO TOP OF OPENING.

CMU OPENINGS GREATER THAN 3'-0"

NTS

4004

DESIGNED A LINDEMAN
DRAWN J MARTIN
CHECKED A LINDEMAN
APPROVED M FISHER

WATERWORKS ENGINEERS
2260 Douglas Blvd., Suite 105 • Roseville, CA 95661 • 916-780-2888

CITY OF MORRO BAY
WATER RECLAMATION FACILITY
LIFT STATIONS AND OFFSITE PIPELINES

STANDARD DETAILS

STANDARD DETAILS

REGISTERED PROFESSIONAL ENGINEER ANDREW L. LINDEMAN No. C88058 CIVIL STATE OF CALIFORNIA
05-29-2020

DATE	MAY 2020
PROJECT NUMBER	17-082
DRAWING NUMBER	SD-8
SHEET NUMBER	222

FILENAME: 1782D-SD801.dgn PLOT DATE: 5/23/2020 11:08:01 AM

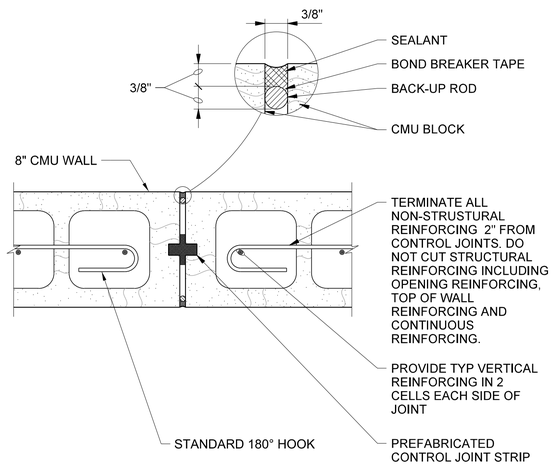

NOTE:

12" CMU WALL WITH 2 LAYERS OF REINFORCING IS SIMILAR.

CMU CONTROL JOINT

NTS

4100

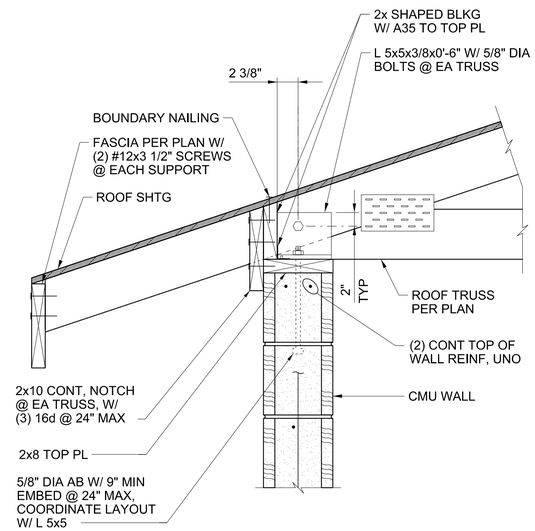

TOP OF WALL SECTION

NTS

4200

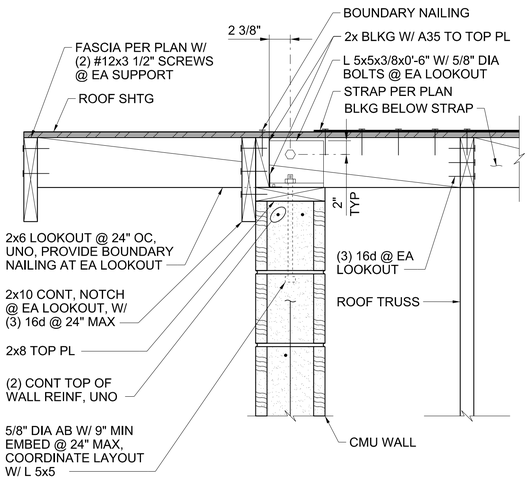

GABLE END WALL SECTION

NTS

4201

STAIRWAY WIDTH	BEARING BARS
	ALUMINUM TREAD
2'-3" OR LESS	1"x3/16"
2'-9" OR LESS	1 1/4"x3/16"
3'-5" OR LESS	1 1/2"x3/16"
4'-2" OR LESS	1 3/4"x3/16"

NOTES:

1. PROVIDE PROTECTION FOR DISSIMILAR METALS AND CONCRETE AS SPECIFIED.
2. GRIND EXPOSED FACES ONLY.
3. STAIR HANDRAIL NOT SHOWN FOR CLARITY. PROVIDE STAIR HANDRAIL BOTH SIDES.
4. FABRICATOR TO COORDINATE BOLTED TREADS AND RAIL POST CONNECTIONS

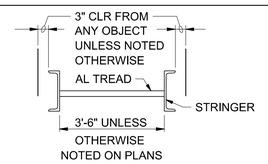

STAIR TREADS

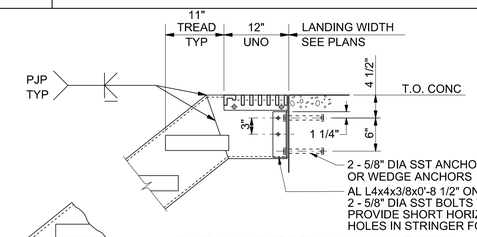

TOP CONNECTION CONCRETE

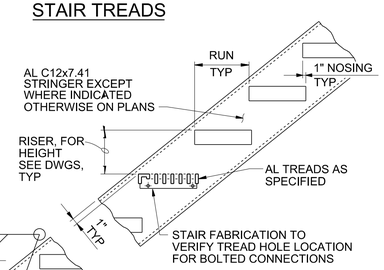

STRINGERS

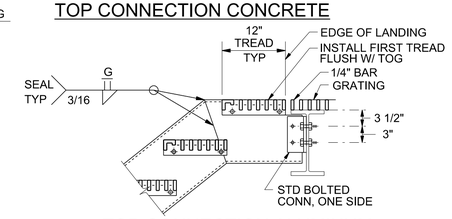

TOP CONNECTION ALUMINUM

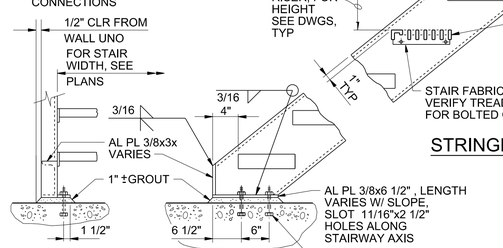

SECTION

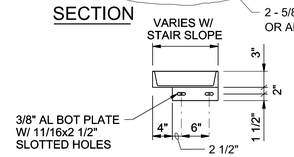

PLAN BOTTOM

ALUMINUM STAIRS

NTS

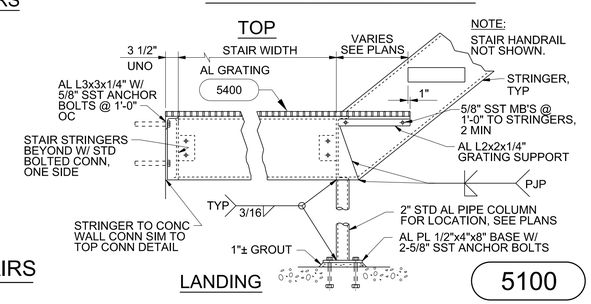

NOTE:

STAIR HANDRAIL NOT SHOWN.

LANDING

5100

DESIGNED A LINDEMAN
DRAWN J MARTIN
CHECKED A LINDEMAN
APPROVED M FISHER

WATERWORKS ENGINEERS
2260 Douglas Blvd., Suite 105 • Roseville, CA 95661 • 916-780-2888

CITY OF MORRO BAY
WATER RECLAMATION FACILITY LIFT STATIONS AND OFFSITE PIPELINES

STANDARD DETAILS

STANDARD DETAILS

REGISTERED PROFESSIONAL ENGINEER ANDREW L. LINDEMAN No. C88058 CIVIL STATE OF CALIFORNIA
05-29-2020

DATE	MAY 2020
PROJECT NUMBER	17-082
DRAWING NUMBER	SD-9
SHEET NUMBER	223

FILENAME: 1782D-SD801.dgn PLOT DATE: 5/23/2020 11:09:11 AM

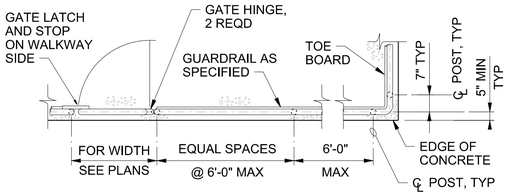

PLAN

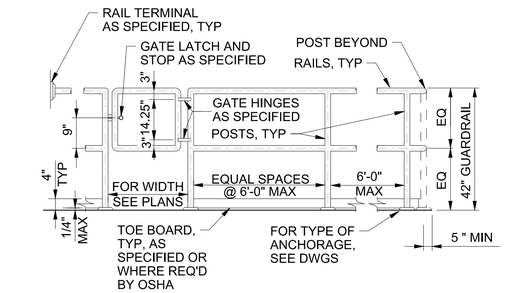

ELEVATION

NOTE:

1. FOR GUARDRAIL MATERIAL REFERENCE DRAWINGS AND/OR JOB SPECIFICATIONS

TWO-RAIL GUARDRAIL

NTS

5200A

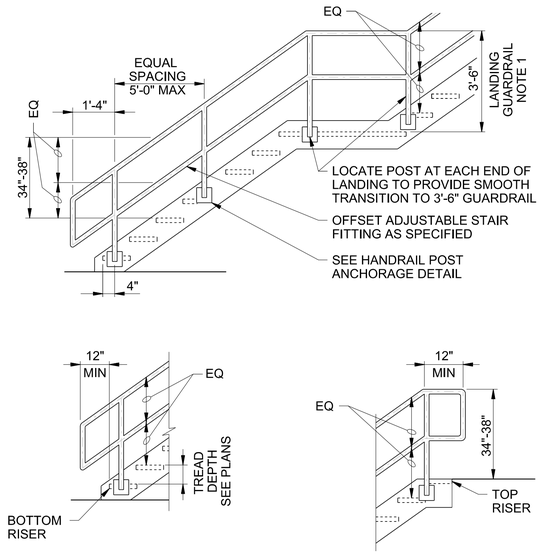

NOTES:

1. SEE TYPICAL GUARDRAIL DETAIL 5200A .
2. SEE SPECIFICATIONS FOR HANDRAIL MATERIAL.

TWO-RAIL HANDRAIL AT STAIRS

NTS

5201A

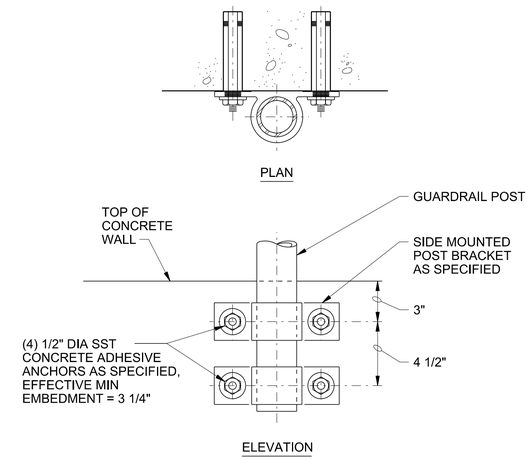

PLAN

ELEVATION

NOTES:

1. PROVIDE PROTECTION FOR DISSIMILAR METALS AND CONCRETE PER SPECIFICATIONS.
2. USE SIDE MOUNTED POST BRACKET AS A TEMPLATE FOR THE ANCHOR BOLTS.
3. MAINTAIN THE CLEARANCES BETWEEN THE TOE BOARD AND THE CONCRETE SURFACES REQUIRED BY ALL STATE AND FEDERAL SAFETY REQUIREMENTS.

GUARDRAIL POST ANCHORAGE-ALUMINUM

NTS

5250B

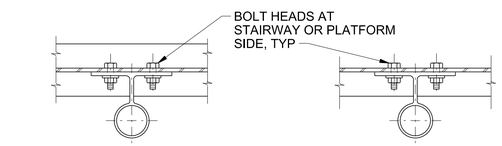

PLAN

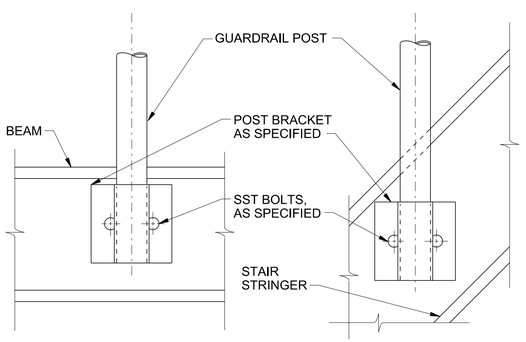

ELEVATION

NOTES:

1. PROVIDE PROTECTION FOR DISSIMILAR METALS AND CONCRETE PER SPECIFICATIONS.
2. HANDRAIL POST ANCHORAGE TO ALSO BE USED FOR GUARDRAIL POST ANCHORAGE.
3. REFERENCE DRAWINGS AND OR SPECIFICATIONS FOR MATERIALS.

GUARDRAIL POST ANCHORAGE-TYPE D

NTS

5250D

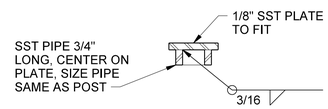

COVER PLATE

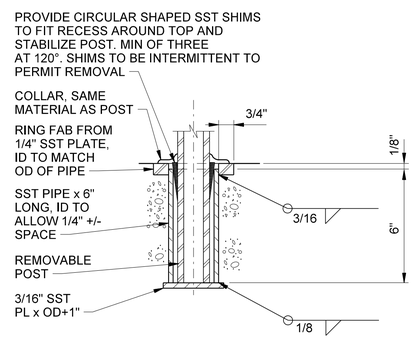

NOTES:

1. PROVIDE COVER PLATE FOR EACH ANCHORAGE SLEEVE.
2. HANDRAIL POST ANCHORAGE TO ALSO BE USED FOR GUARDRAIL POST ANCHORAGE.

GUARDRAIL POST ANCHORAGE-TYPE E

NTS

5250E

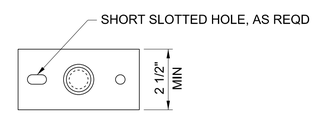

PLAN

NTS

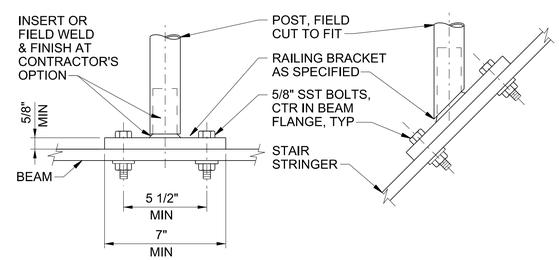

ELEVATION

NTS

NOTE:

PROVIDE PROTECTION FOR DISSIMILAR METALS AND CONCRETE PER SPECIFICATIONS.

HANDRAIL POST ANCHORAGE TYPE F

NTS

5250F

DESIGNED J KELLOGG
DRAWN B TROTTER
CHECKED J KELLOGG
APPROVED M FISHER

WATERWORKS ENGINEERS
2260 Douglas Blvd., Suite 105 • Roseville, CA 95661 • 916-780-2888

CITY OF MORRO BAY
WATER RECLAMATION FACILITY LIFT STATIONS AND OFFSITE PIPELINES

STANDARD DETAILS

STANDARD DETAILS

REGISTERED PROFESSIONAL ENGINEER ANDREW L. LINDEMAN No. C88058 CIVIL STATE OF CALIFORNIA
05-29-2020

DATE MAY 2020
PROJECT NUMBER 17-082
DRAWING NUMBER SD-10
SHEET NUMBER 224

FILENAME: 1782D-SD801.dgn PLOT DATE: 5/23/2020 11:10:17 AM

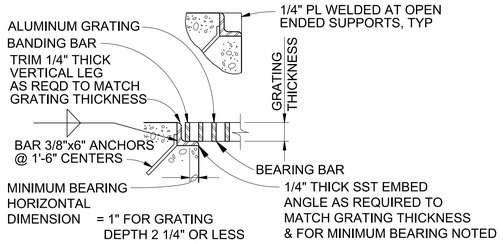

CONCRETE INSERT ANGLE-SUPPORTED

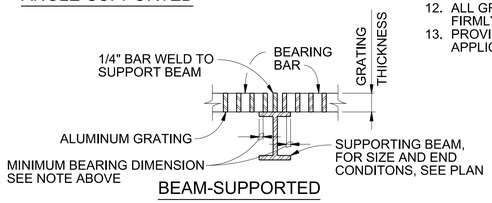

BEAM-SUPPORTED

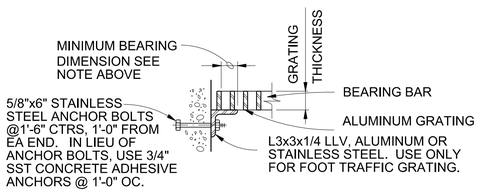

LEDGER ANGLE-SUPPORTED

GRATING NOTES

1. EXTEND GRATING CONTINUOUSLY OVER GATE GUIDES AND GATES.
2. NOTCH GRATING SUPPORTS AT GATES AS REQUIRED.
3. GRATING SPAN —·—·— SEE PLAN.
4. WIDTH OF GRATING SECTIONS SHALL NOT EXCEED 3'-0" AND INDIVIDUAL SECTION WEIGHT SHALL NOT EXCEED 150 POUNDS.
5. SHOP DRAWINGS BASED ON FIELD DIMENSIONS SHALL BE SUBMITTED TO THE ENGINEER PRIOR TO FABRICATION.
6. MATERIAL FOR SUPPORTS OF ALUMINUM GRATING TO BE SAME AS GRATING, EXCEPT METAL SUPPORTS THAT ARE TO BE EMBEDED IN CONCRETE SHALL BE TYPE 316 STAINLESS STEEL.
7. UNLESS NOTED OTHERWISE ON PLANS, GRATING THICKNESS SHALL BE AS TABULATED IN "GRATING THICKNESS TABLE" FOR APPLICABLE TRAFFIC.
8. BEARING BAR THICKNESS FOR GRATING TO BE 3/16" MINIMUM.
9. BAND ALL EDGES WITH 3/16 x DEPTH OF BEARING BAR.
10. PROVIDE MISCELLANEOUS GRATING FASTENERS AS REQUIRED.
11. THE HORIZONTAL CLEARANCE BETWEEN THE GRATING AND GRATING SUPPORTS SHALL NOT BE LESS THAN 1/4" NOR GREATER THAN 1/2" AND AS SPECIFIED.
12. ALL GRATING SECTIONS, WHEN IN PLACE, SHALL ALWAYS BE FIRMLY ANCHORED TO THEIR SUPPORTS AS SPECIFIED.
13. PROVIDE SUPPORT TYPE SHOWN IN DRAWINGS OR MOST APPLICABLE FOR THE INSTALLATION CONDITIONS.

FOOT TRAFFIC

GRATING THICKNESS TABLE

MAXIMUM SPAN	ALUMINUM (IN.)
3'-6"	1 1/4"
4'-0"	1 1/2"
4'-6"	1 3/4"
5'-0"	1 3/4"
5'-6"	2"
6'-0"	2 1/4"
6'-6"	2 1/4"
7'-0"	2 1/2"

ALUMINUM GRATING (5400)

NTS

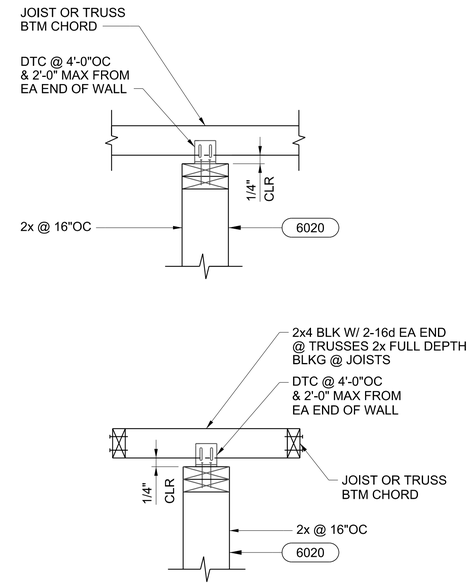

*PLYWOOD AND FINISHES NOT SHOWN FOR CLARITY

NON-BRG WALL DETAIL (6010)

NTS

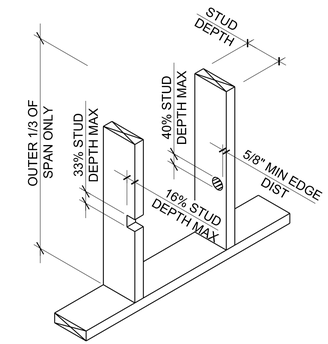

BORED HOLES SHALL NOT BE LOCATED AT THE SAME SECTION OF STUD AS A CUT OR NOTCH

WOOD STUD CUTTING, NOTCHING, & BORING LIMITS (6020)

NTS

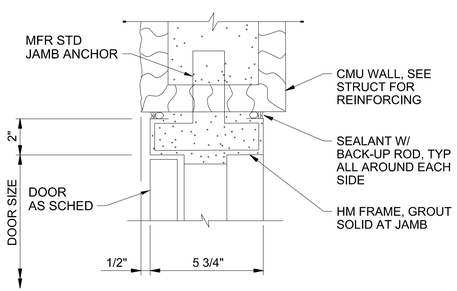

NOTE:
HEAD SIMILAR

DOOR JAMB - 8" CMU (8100)

NTS

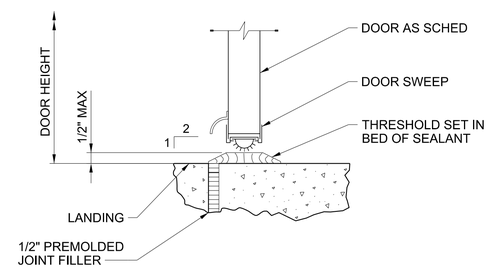

FLUSH LANDING - TYPE A

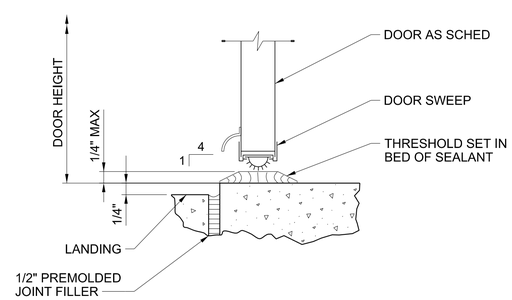

OFFSET LANDING - TYPE B

DOOR THRESHOLD (8110)

NTS

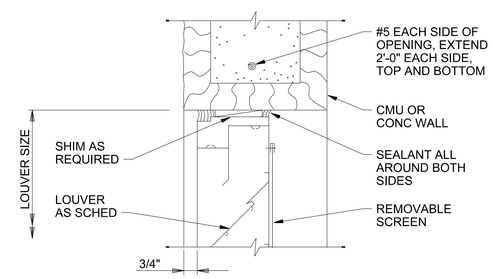

HEAD
(JAMB SIMILAR)

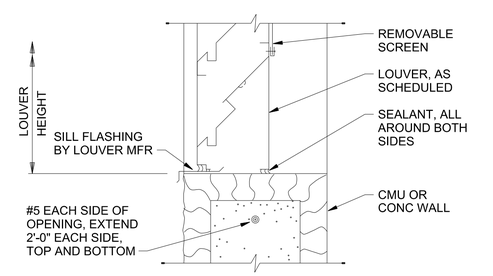

SILL

LOUVER (8115)

NTS

DESIGNED A LINDEMAN
DRAWN J MARTIN
CHECKED A LINDEMAN
APPROVED M FISHER

WATERWORKS ENGINEERS
2260 Douglas Blvd., Suite 105 • Roseville, CA 95661 • 916-780-2888

CITY OF MORRO BAY
WATER RECLAMATION FACILITY LIFT STATIONS AND OFFSITE PIPELINES

STANDARD DETAILS
STANDARD DETAILS

REGISTERED PROFESSIONAL ENGINEER ANDREW L. LINDEMAN No. C88058 CIVIL STATE OF CALIFORNIA
05-29-2020

DATE	MAY 2020
PROJECT NUMBER	17-082
DRAWING NUMBER	SD-11
SHEET NUMBER	225

FILENAME: 1782D-SD801.dgn PLOT DATE: 5/23/2020 11:11:48 AM

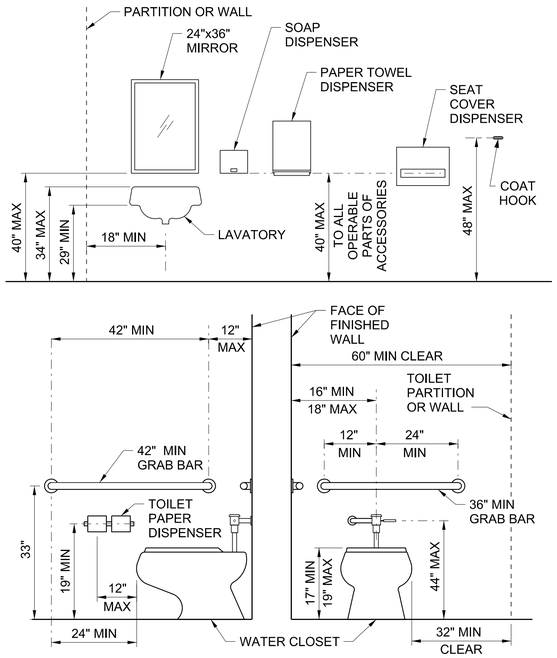

STANDARD ACCESSIBLE FIXTURE MOUNTING LOCATIONS

NTS

10100

DIMENSION TABLE	
PIPE SIZE	A
2-1/2"	2-1/2"
3"	2-1/2"
4"	3"
6"	3"
8"	3"
10"	3"
12"	3"
14"	4"
16"	4"
18"	6"
20"	6"
24"	6"
30"	6"
36"	6"

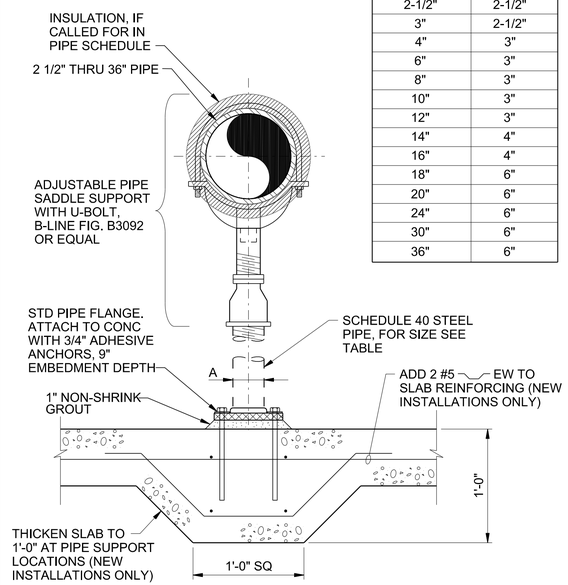

ADJUSTABLE-HEIGHT SADDLE PIPE SUPPORT

NTS

15000

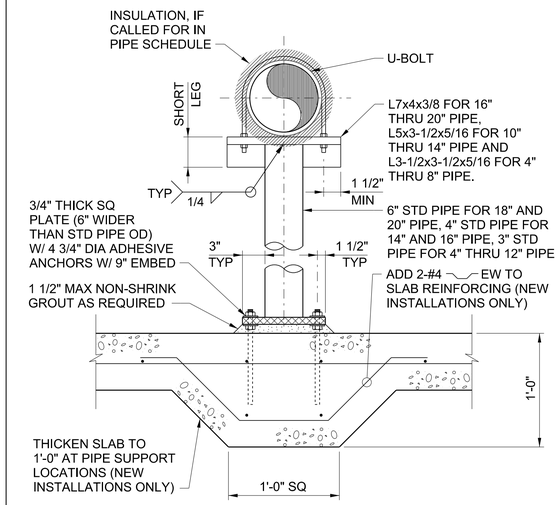

NOTES:

1. COAT ALL SHAPES PER SPECIFICATION SECTION 09900 SYSTEM 300.

FIXED-HEIGHT T-POST PIPE SUPPORT

NTS

15001

DIMENSION TABLE	
PIPE SIZE	(B)
4" THRU 16"	2'-0"
18" THRU 20"	3'-0"

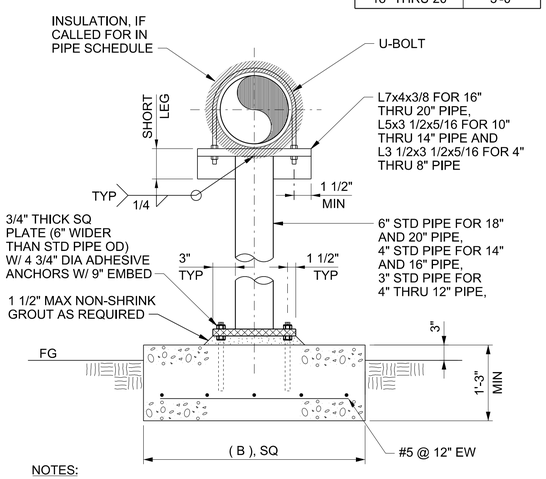

NOTES:

1. COAT ALL SHAPES PER SPECIFICATION SECTION 09900 SYSTEM 300.

FIXED-HEIGHT T-POST PIPE SUPPORT WITH CONCRETE PAD

NTS

15001A

DIMENSION TABLE	
PIPE SIZE	(B)
2-1/2" - 16"	2'-0"
18" - 24"	3'-0"
30" - 36"	4'-0"

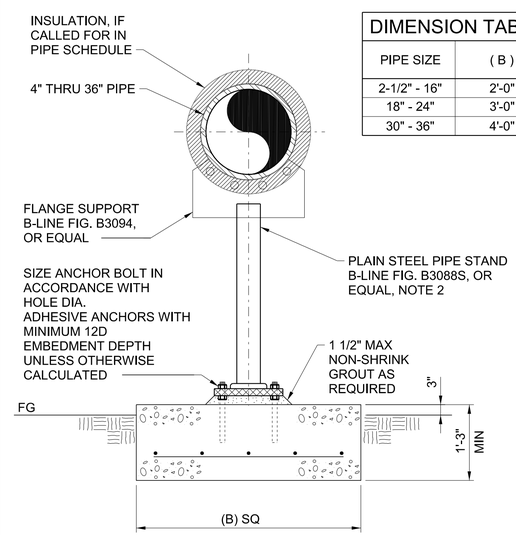

NOTES:

1. COAT ALL SHAPES PER SPECIFICATION SECTION 09900 SYSTEM 300.
2. B-LINE FIG. B3088 MAY BE USED IN NON-SEISMIC SUPPORT APPLICATIONS OR WHERE 12X ANCHOR HOLE SPACING IS PROVIDED. FOR VERTICAL ADJUSTMENTS USE PIPE ADJUSTER B-LINE FIG. B3089 AND FIG. B3088ST OR FIG. B3088T IN NON-SEISMIC SUPPORT APPLICATIONS.

FLANGE MOUNTED PIPE SUPPORT W/ CONCRETE PAD

NTS

15002A

NOTE:

USE NEOPRENE SLEEVE ON COPPER AND PVC PIPING AT STRAPS AND BRACKETS.

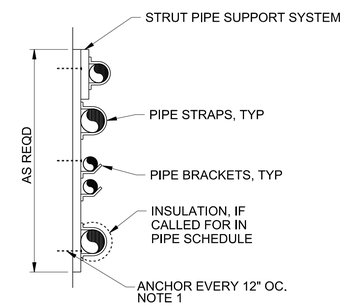

WALL MOUNTED

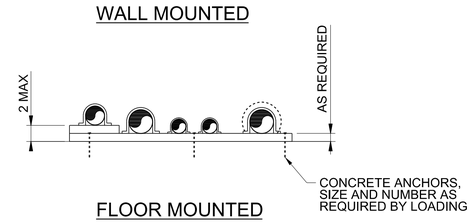

FLOOR MOUNTED

NOTE :

1. ATTACH TO WALL WITH SST ANCHORS, 3/8" DIAMETER MIN, COORDINATED WITH WALL CONSTRUCTION

PIPE SUPPORTS

NTS

15010

DESIGNED K ALACON
DRAWN B TROTTER
CHECKED K ALACON
APPROVED M FISHER

WATERWORKS ENGINEERS
2260 Douglas Blvd., Suite 105 • Roseville, CA 95661 • 916-780-2888

CITY OF MORRO BAY
WATER RECLAMATION FACILITY LIFT STATIONS AND OFFSITE PIPELINES

STANDARD DETAILS

STANDARD DETAILS

REGISTERED PROFESSIONAL ENGINEER KRISTINA P. ALACON No. C70952 CIVIL STATE OF CALIFORNIA
05-29-2020

DATE	MAY 2020
PROJECT NUMBER	17-082
DRAWING NUMBER	SD-12
SHEET NUMBER	226

FILENAME: 1782D-SD801.dgn PLOT DATE: 5/23/2020 11:15:09 AM

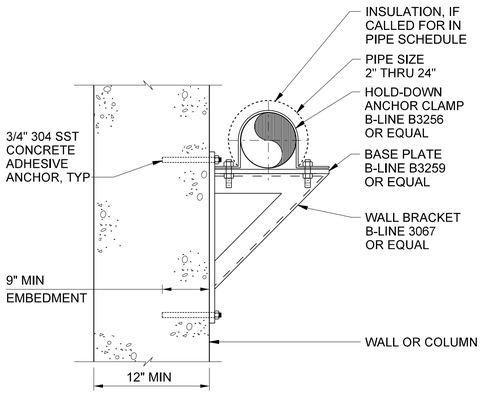

NOTES:

1. ALL PIPE SUPPORT MATERIALS TO BE 304 SST.

FIXED PIPE SUPPORT-WALL BRACKET 2" - 18"

NTS

15011A

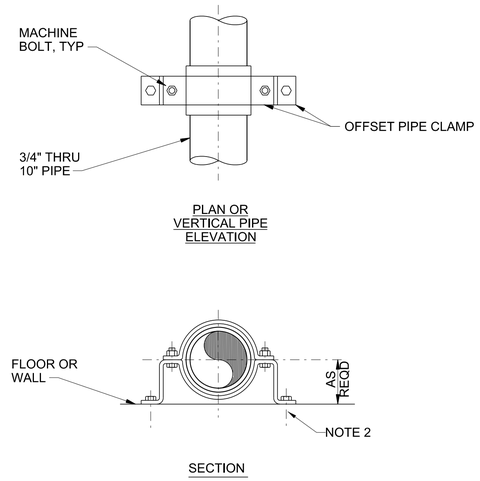

NOTES:

1. FOR VERTICAL PIPE RUNS ONLY.
2. ATTACH TO WALL WITH SST ANCHORS, 3/8" DIAMETER MIN, COORDINATED WITH WALL CONSTRUCTION

WALL-MOUNTED STANDOFF PIPE SUPPORT, TYPE 1

NTS

15040

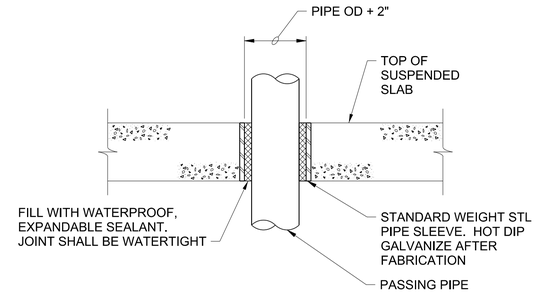

NOTES:

1. COAT FLOOR SLEEVE WITH SPECIFIED PAINT SYSTEM BEFORE CONCRETE PLACEMENT.

FLOOR SLEEVE

NTS

15103

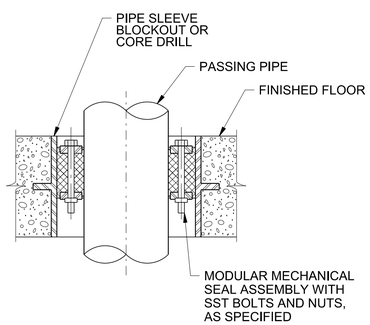

FLOOR SLEEVE WITH MODULAR MECHANICAL SEAL

NTS

15105

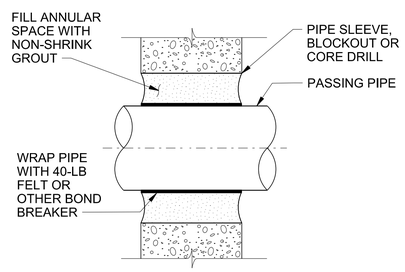

WALL SLEEVE WITH GROUT SEAL

NTS

15131

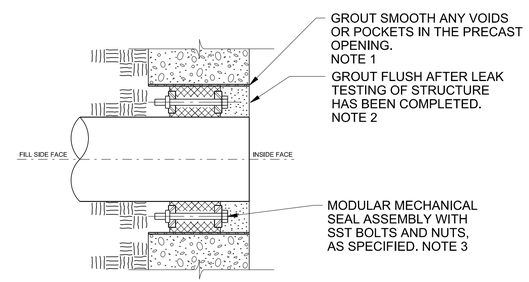

NOTES:

1. COORDINATE MODULAR SEAL SPACE REQUIRMENTS WITH PRECAST VENDER FOR OPENING SIZES PRIOR TO PLACING ORDER OF PRE-CAST STRUCTURE.
2. AFTER MODULAR SEAL INSTALL AND LEAK TEST BUT BEFORE GROUT IS PLACED, GREASE INSIDE FACE OF SEAL.
3. INSTALL PER MANUFACTURER'S INSTRUCTIONS WITH THE BOLT HEADS FACING THE INSIDE FACE OF THE STRUCTURE.

PRE-CAST OPENING WITH MODULAR MECHANICAL SEAL (BURIED)

NTS

15132A

DESIGNED K ALACON
DRAWN J MARTIN
CHECKED K ALACON
APPROVED M FISHER

WATERWORKS ENGINEERS
2260 Douglas Blvd., Suite 105 • Roseville, CA 95661 • 916-780-2888

CITY OF MORRO BAY
WATER RECLAMATION FACILITY
LIFT STATIONS AND OFFSITE PIPELINES

STANDARD DETAILS

STANDARD DETAILS

REGISTERED PROFESSIONAL ENGINEER
KRISTINA P. ALACON
No. C70952
CIVIL
STATE OF CALIFORNIA
05-29-2020

DATE MAY 2020
PROJECT NUMBER 17-082
DRAWING NUMBER SD-13
SHEET NUMBER 227

FILENAME: 1782D-SD801.dgn PLOT DATE: 5/23/2020 11:16:22 AM

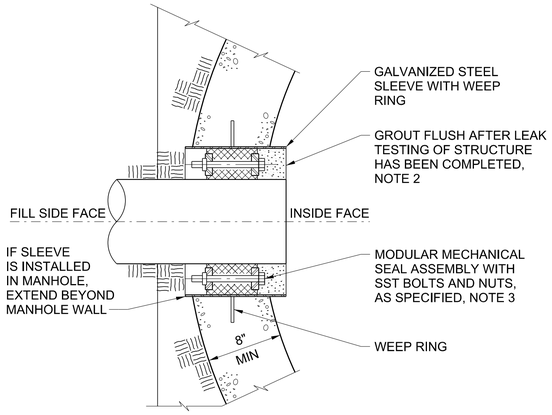

NOTES:

1. COORDINATE MODULAR SEAL SPACE REQUIRMENTS WITH PRECAST VENDER FOR OPENING SIZES PRIOR TO PLACING ORDER OF PRE-CAST STRUCTURE.
2. AFTER MODULAR SEAL INSTALL AND LEAK TEST BUT BEFORE GROUT IS PLACED, GREASE INSIDE FACE OF SEAL.
3. INSTALL PER MANUFACTURER'S INSTRUCTIONS WITH THE BOLT HEADS FACING THE INSIDE FACE OF THE STRUCTURE.

PRE-CAST MANHOLE OPENING WITH MODULAR MECHANICAL SEAL (BURIED)

NTS

15132C

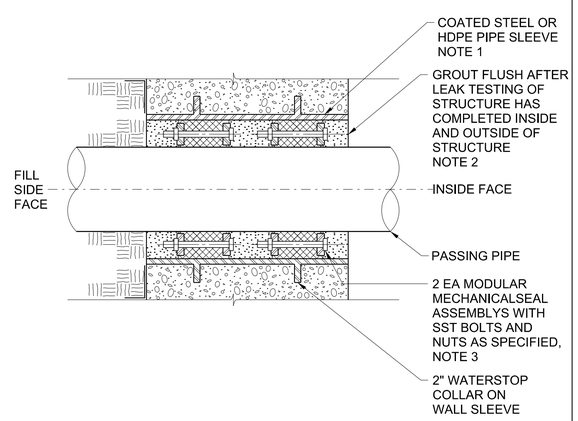

NOTES:

1. COORDINATE SIZE OF WALL SLEEVE WITH MODULAR MECHANICAL SEAL MANUFACTURER TO CREATE A LEAK PROOF ASSEMBLY TO 20 PSI.
2. AFTER MODULAR SEAL INSTALL AND LEAK TESTED, BUT BEFORE GROUT IS PLACED GREASE INSIDE FACE OF SEAL.
3. INSTALL PER MANUFACTURES INSTRUCTIONS WITH THE BOLT HEADS FACING THE INSIDE FACE OF THE STRUCTURE.

WALL SLEEVE WITH DOUBLE MODULAR MECHANICAL SEALS

NTS

15132D

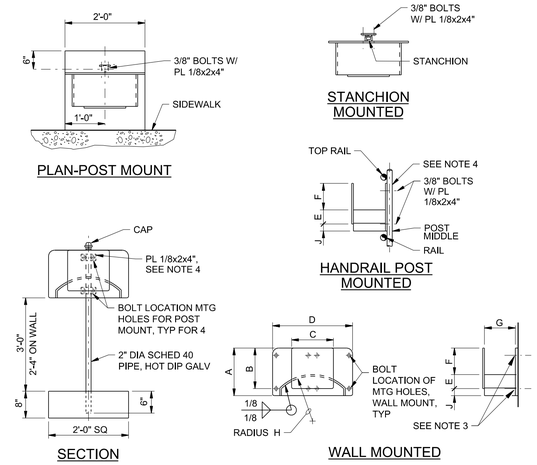

RACK TYPE	DIMENSION IN INCHES								
	A	B	C	D	E	F	G	H	J
TYPE A-3/4" & 1" HOSE	9	7-1/2	6	9	3	4	7-1/2	9-3/4	2
TYPE B-1 1/2" HOSE	12	10	9	12	4	6	10	13	2

NOTES:

1. INTERIOR UNITS SHALL BE FABRICATED FROM 1/8" A-36 STEELPLATE AND ENTIRE UNIT SHALL BE HOT DIP GALVANIZED AFTERFABRICATION.
2. EXTERIOR UNITS SHALL BE FABRICATED FROM 3/16" 6061-T6 ALUMINUM ALLOY PLATE.
3. ATTACH TO WALL WITH SST ANCHORS, 3/8" DIAMETER MIN, COORDINATE WITH WALL CONSTRUCTION
4. ATTACH TO VERTICAL HANDRAIL OR INDIVIDUAL POST WITHPLATES AND (4) - 3/8" STAINLESS STEEL BOLTS.
5. ATTACH TO STEEL COLUMN WITH (4) - 3/8" ROUND HEAD BOLTS,ONE EACH CORNER. INSERT DOUBLE SPACER NUTS BETWEEN COLUMN AND HOSE RACK.

HOSE RACK

NTS

15205

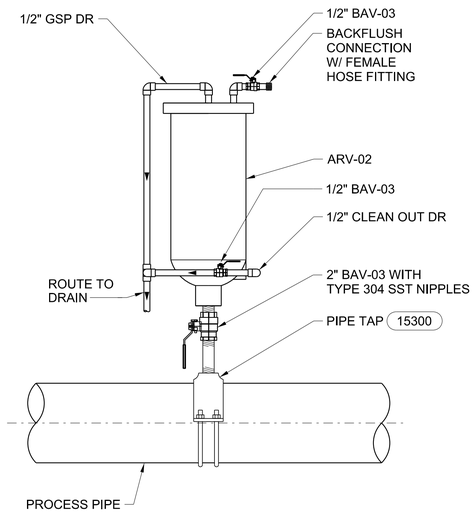

NOTES:

1. PIPING BETWEEN PIPE TAP AND ISOLATION VALVE SHALL BE TYPE 304 SST. ALL OTHER PIPING SHALL BE GALVANIZED STEEL.

AIR RELEASE VALVE INSTALLATION SEWAGE SERVICE

NTS

15231

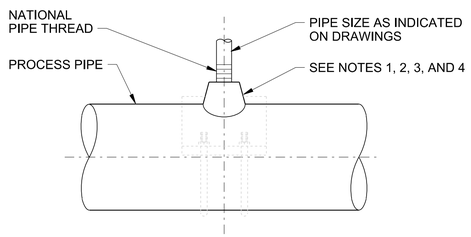

PIPE TAPS

NOTES:

1. FOR STEEL, GALVANIZED STEEL, AND PVC 2 1/2" AND SMALLER USE A BUSHING IN A TEE.
2. FOR DUCTILE IRON, ALL SIZES, USE SERVICE SADDLE.
3. FOR NEW STEEL AND STAINLESS STEEL PIPES 3" AND LARGER, AND PRESSURE VESSELS, USE THRED-O-LET AS SHOWN.
4. FOR EXISTING PVC, STEEL AND STAINLESS STEEL PIPES 3" AND LARGER, USE SERVICE SADDLE.

PIPE TAPS

NTS

15300

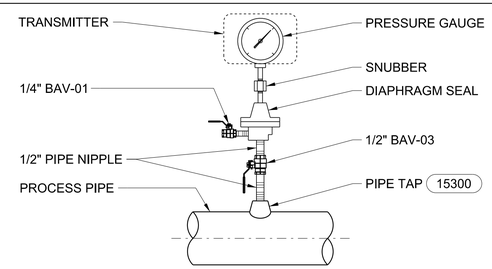

DIAPHRAGM SEAL INSTALLATION

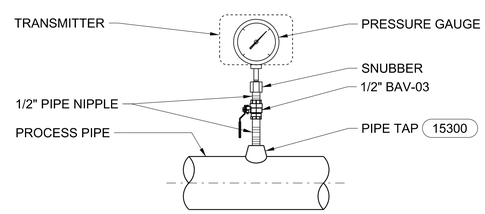

DIRECT INSTALLATION

NOTES:

1. USE DIRECT INSTALLATION FOR POTABLE WATER, RAW WATER, RECLAIMED WATER AND AIR PROCESS PIPING.
2. USE DIAPHRAGM SEAL INSTALLATION FOR SEWAGE, SLUDGE, CHEMICAL AND ALL PROCESS PIPES THAT ARE NOT WATER OR AIR.
3. ALL PIPE NIPPLES TO BE TYPE 304 STAINLESS STEEL.
4. FOR MULTIPLE INSTRUMENTS, PROVIDE TEE, PIPE NIPPLES AND ELBOWS AS REQUIRED IN INSTRUMENT LOCATION.

PRESSURE GAUGE OR TRANSMITTER INSTALLATION

NTS

15310

DESIGNED K ALACON
DRAWN J MARTIN
CHECKED K ALACON
APPROVED M FISHER

WATERWORKS ENGINEERS
2260 Douglas Blvd., Suite 105 • Roseville, CA 95661 • 916-780-0888

CITY OF MORRO BAY
WATER RECLAMATION FACILITY LIFT STATIONS AND OFFSITE PIPELINES

STANDARD DETAILS

STANDARD DETAILS

REGISTERED PROFESSIONAL ENGINEER KRISTINA P. ALACON No. C70952 CIVIL STATE OF CALIFORNIA
05-29-2020

DATE MAY 2020
PROJECT NUMBER 17-082
DRAWING NUMBER SD-14
SHEET NUMBER 228

FILENAME: 1782D-SD801.dgn PLOT DATE: 5/23/2020 11:17:33 AM

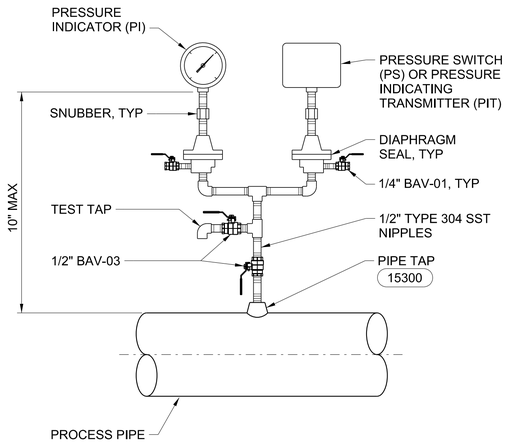

DIRECT MOUNTING WITH DIAPHRAGM SEAL

PRESSURE SWITCH AND INDICATOR INSTALLATION

NTS

15313

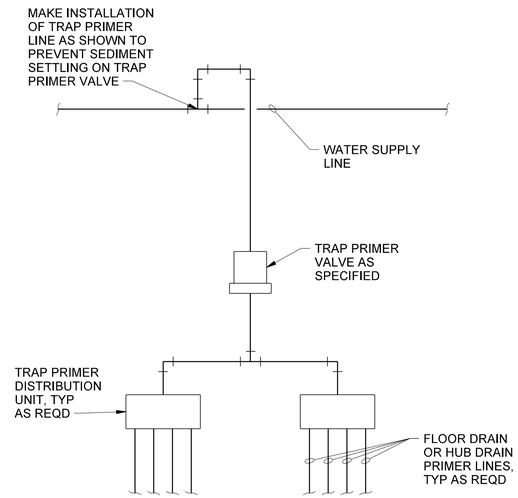

FLOOR DRAIN TRAP PRIMER VALVE

NTS

15401

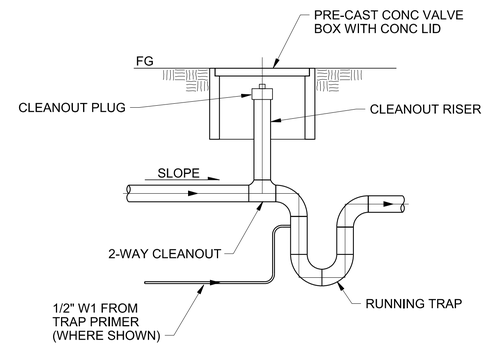

BUILDING TRAP

NTS

15410

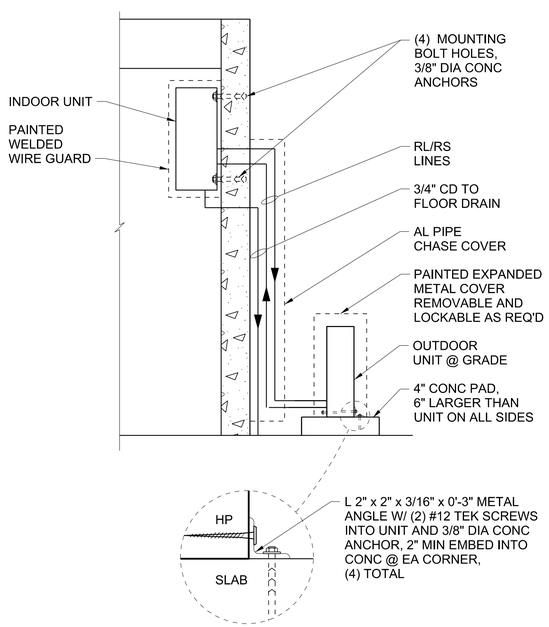

DUCTLESS WALL MOUNTED SPLIT-SYSTEM HEAT PUMP

NTS

15515

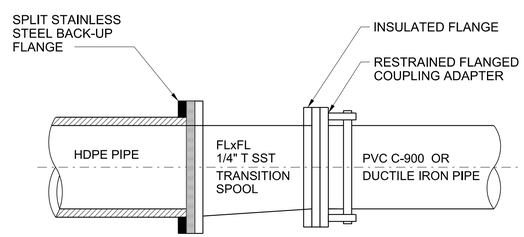

NOTES:

1. PIPE SIZES, MATERIALS AND DIMENSION RATIO (DR) OR PIPE WALL THICKNESS PER DRAWINGS AND SPECIFICATIONS. HDPE IS GENERALLY AT LEAST ONE PIPE SIZE LARGER THAN C-900 OR DUCTILE IRON PIPE.
2. MAKE FINAL CUT ON HDPE AND PVC C-900 OR DUCTILE IRON PIPE AND MAKE CONNECTION WHEN HDPE PIPE AND PVC C-900 ARE AT THEIR COOLEST TEMPERATURES.
3. PROVIDE INSULATING FLANGE AND INSULATING BOLT SLEEVES WASHER FOR ALL SST TO DIP OR PVC CONNECTIONS.
4. PROVIDE SMOOTH TRANSITION FROM ID OF HDPE TO ID OF DIP. MATCH CROWNS.

HDPE TRANSITION TO PVC C-900 OR DUCTILE IRON PIPE

NTS

15850

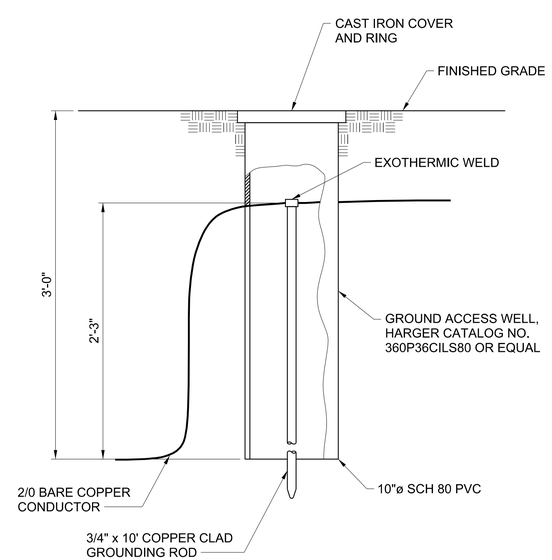

GROUND ROD WITH TEST WELL

NTS

16410

DESIGNED T FRISCH
DRAWN J MARTIN
CHECKED T FRISCH
APPROVED M FISHER

WATERWORKS ENGINEERS
2260 Douglas Blvd., Suite 105 • Roseville, CA 95661 • 916-780-2888

CITY OF MORRO BAY
WATER RECLAMATION FACILITY LIFT STATIONS AND OFFSITE PIPELINES

STANDARD DETAILS

STANDARD DETAILS

REGISTERED PROFESSIONAL ENGINEER ARETINA P. ALADEN No. C70952 CIVIL STATE OF CALIFORNIA
05-29-2020

DATE MAY 2020
PROJECT NUMBER 17-082
DRAWING NUMBER SD-15
SHEET NUMBER 229

FILENAME: 1782D-SD801.dgn PLOT DATE: 6/2/2020 7:39:03 AM

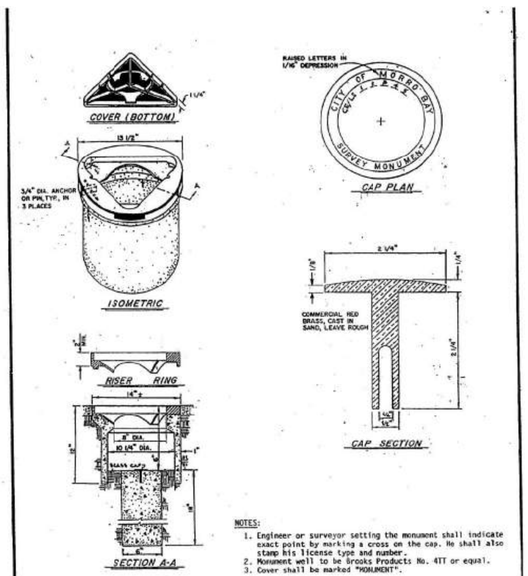

NOTES:

1. Engineer or surveyor setting the monument shall indicate exact point by marking a cross on the cap. He shall also stamp his license type and number.
2. Monument well to be Brooks Products No. 4TT or equal.
3. Cover shall be marked "MONUMENT".

APPROVED-CITY ENGINEER	DATE	CITY OF MORRO BAY DEPARTMENT OF PUBLIC WORKS	STANDARD MONUMENT
10-5-87			
REVISIONS / BY / APP / DATE		SCALE: NONE	M-1

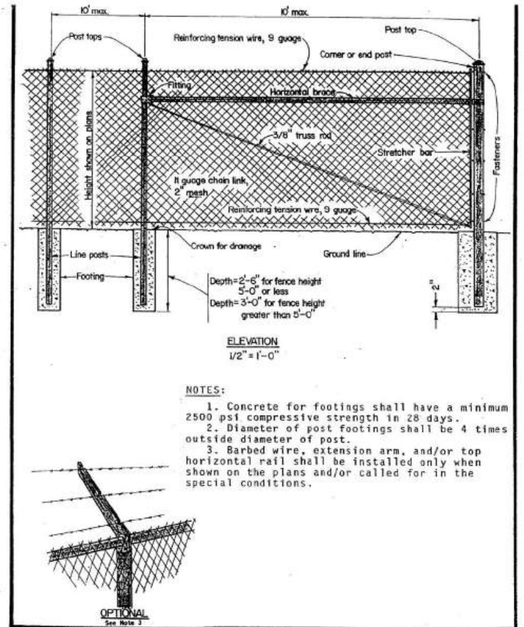

NOTES:

1. Concrete for footings shall have a minimum 2500 psi compressive strength in 28 days.
2. Diameter of post footings shall be 4 times outside diameter of post.
3. Barbed wire, extension arm, and/or top horizontal rail shall be installed only when shown on the plans and/or called for in the special conditions.

APPROVED-CITY ENGINEER	DATE	CITY OF MORRO BAY DEPARTMENT OF PUBLIC WORKS	CHAIN LINK FENCE
See Note 3 / 10-5-87			
REVISIONS / BY / APP / DATE		SCALE: AS SHOWN	M-4

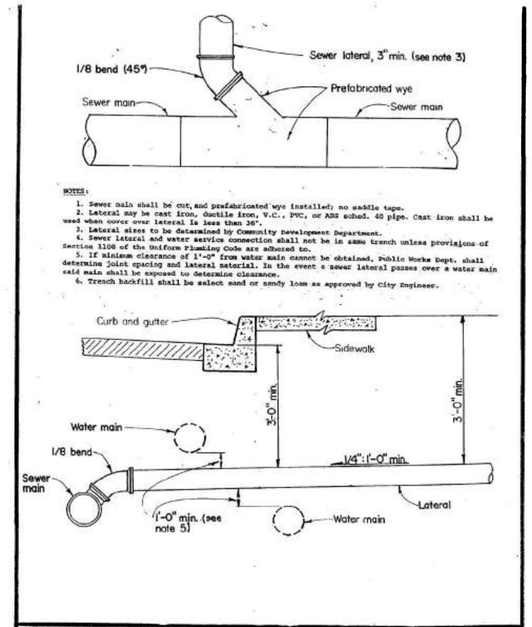

NOTES:

1. Sewer main shall be cut, and prefabricated wye installed; no saddle taps.
2. Lateral may be cast iron, Ductile iron, V.C., PVC, or ABS sched. 40 pipe. Cast iron shall be used when cover over lateral is less than 36".
3. Lateral sizes to be determined by Community Development Department.
4. Sewer lateral and water service connection shall not be in same trench unless provisions of Section 1108 of the Uniform Plumbing Code are adhered to.
5. If minimum clearance of 1'-0" from water main cannot be obtained, Public Works Dept. shall determine joint spacing and lateral material. In the event a sewer lateral passes over a water main said main shall be exposed to determine clearance.
6. Trench backfill shall be select sand or sandy loam as approved by City Engineer.

APPROVED-CITY ENGINEER	DATE	CITY OF MORRO BAY DEPARTMENT OF PUBLIC WORKS	SEWER MAIN CONNECTION
10-5-87			
REVISIONS / BY / APP / DATE		SCALE: NONE	S-1

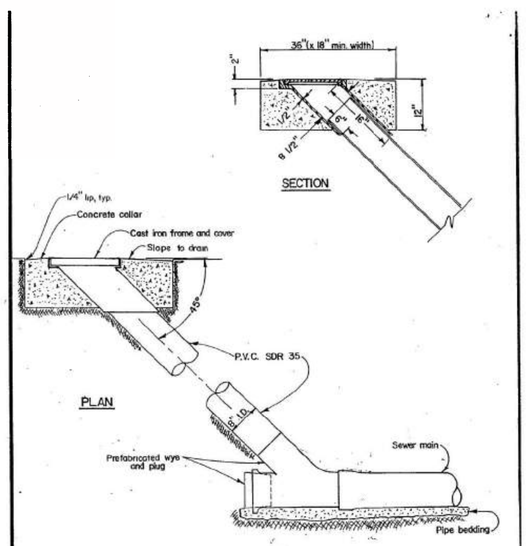

NOTES:

1. Flushing branch (cleanout) shall be K.P. Foundrys model No. 2615 cast iron frame and model No. 3615 cast iron cover, or approved equals. Cover to be marked "SEWER".
2. Prefab. wye shall be same material as sewer main. If sewer main and wye are clay, bell on wye shall be snapped off and appropriate couplings shall be used to connect wye and PVC riser.
3. Concrete for collar shall have a minimum 2500 psi compressive strength in 28 days.

APPROVED-CITY ENGINEER	DATE	CITY OF MORRO BAY DEPARTMENT OF PUBLIC WORKS	SEWER FLUSHING BRANCH (CLEANOUT)
10-5-87			
REVISIONS / BY / APP / DATE		SCALE: NONE	S-2

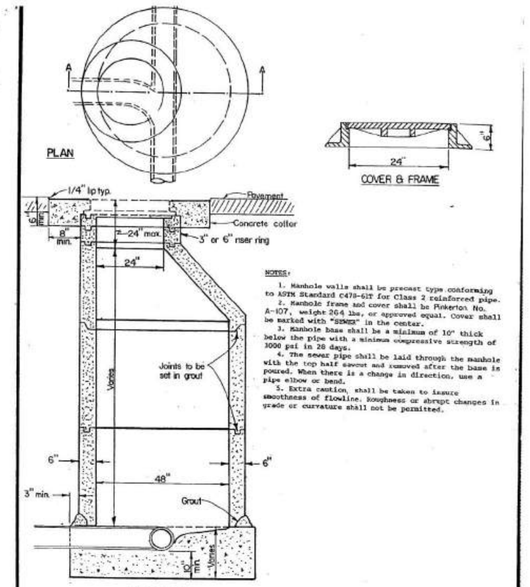

NOTES:

1. Manhole walls shall be precast type conforming to ASTM Standard C478-61T for Class 2 reinforced pipe.
2. Manhole frame and cover shall be Pinkerton No. A-107, weight 264 lbs, or approved equal. Cover shall be marked with "SEWER" in the center.
3. Manhole base shall be a minimum of 10" thick below the pipe with a minimum compressive strength of 3000 psi in 28 days.
4. The sewer pipe shall be laid through the manhole with the top half sawcut and removed after the base is poured. When there is a change in direction, use a pipe elbow or bend.
5. Extra caution, shall be taken to insure smoothness of flowline. Roughness or abrupt changes in grade or curvature shall not be permitted.

APPROVED-CITY ENGINEER	DATE	CITY OF MORRO BAY DEPARTMENT OF PUBLIC WORKS	ECCENTRIC-CONE PRECAST CONCRETE MANHOLE (TYPICAL)
10-5-87			
REVISIONS / BY / APP / DATE		SCALE: NONE	S-3

DESIGNED K ALACON
DRAWN J MARTIN
CHECKED K ALACON
APPROVED M FISHER

WATERWORKS ENGINEERS
2260 Douglas Blvd., Suite 105 • Roseville, CA 95661 • 916-780-2888

CITY OF MORRO BAY
WATER RECLAMATION FACILITY
LIFT STATIONS AND OFFSITE PIPELINES

STANDARD DETAILS

STANDARD DETAILS

REGISTERED PROFESSIONAL ENGINEER — KRISTINA P. ALACON — No. C70952 — CIVIL — STATE OF CALIFORNIA
05-29-2020

DATE	MAY 2020
PROJECT NUMBER	17-082
DRAWING NUMBER	SD-16
SHEET NUMBER	230

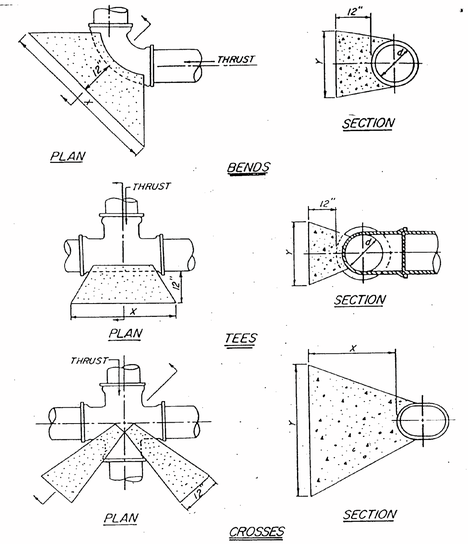

NOTES:

1. This detail for 6" and 8" mains only. Thrust blocks for larger mains shall be engineered and submitted to the City Engineer for approval.
2. All thrust blocks shall be poured against undisturbed soil.
3. All concrete shall have a minimum 2500 psi compressive strength in 28 days.
4. Dimensions shown are minimum.

	SOIL TYPE	
	CLAY	SANDY
6"	X=3'-6"	2'-0"
1.0	Y=2'-0"	1'-6"
	50 FT²/FT.(1)	3.5
8"	X=4'-6"	3'-3"
1.0	Y=3'-0"	2'-0"
	80 FT²/FT.(1)	6.5

APPROVED-CITY ENGINEER DATE 10-5-87

REVISIONS	BY	APP	DATE

CITY OF MORRO BAY
DEPARTMENT OF PUBLIC WORKS

THRUST BLOCKING

SCALE: NONE W-2

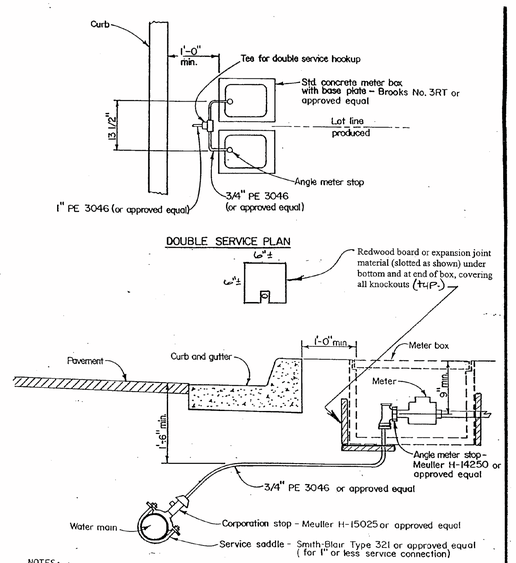

NOTES:

1. Concrete meter box shall have traffic cover when located in travelled way or any portion of driveway approach.
2. Meter box shall have base plate.
3. City of Morro Bay shall install meters and meter boxes for residential developments of two (2) families or less. For all other developments meters and meter boxes shall be installed by developer.

APPROVED-CITY ENGINEER DATE 13-5-87

REVISIONS	BY	APP	DATE
REDWOOD BLOCKS	EP		5/10/99

CITY OF MORRO BAY
DEPARTMENT OF PUBLIC WORKS

WATER SERVICE CONNECTION

SCALE: NONE W-3

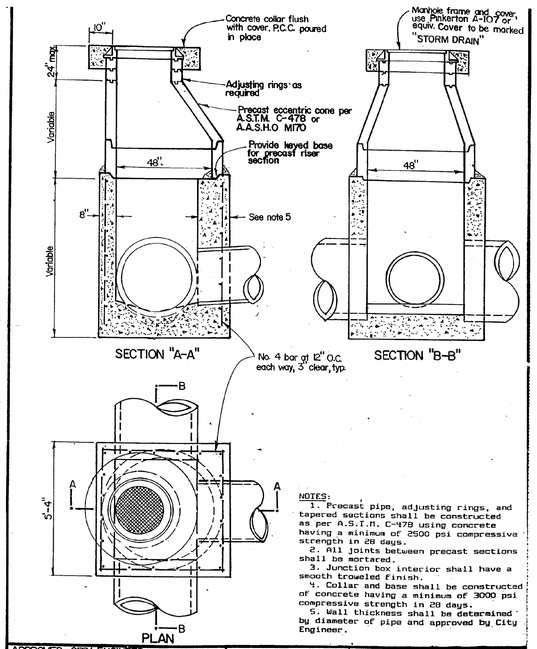

NOTES:

1. Precast pipe, adjusting rings, and tapered sections shall be constructed as per A.S.T.M. C-478 using concrete having a minimum of 2500 psi compressive strength in 28 days.
2. All joints between precast sections shall be mortared.
3. Junction box interior shall have a smooth troweled finish.
4. Collar and base shall be constructed of concrete having a minimum of 3000 psi compressive strength in 28 days.
5. Wall thickness shall be determined by diameter of pipe and approved by City Engineer.

APPROVED-CITY ENGINEER DATE 10-5-87

REVISIONS	BY	APP	DATE

CITY OF MORRO BAY
DEPARTMENT OF PUBLIC WORKS

STORM DRAIN JUNCTION BOX

SCALE: NONE C-9

DESIGNED K ALACON
DRAWN J MARTIN
CHECKED K ALACON
APPROVED M FISHER

WATERWORKS ENGINEERS
2290 Douglas Blvd., Suite 105 • Roseville, CA 95661 • 916-780-2888

CITY OF MORRO BAY
WATER RECLAMATION FACILITY
LIFT STATIONS AND OFFSITE PIPELINES

STANDARD DETAILS

STANDARD DETAILS

REGISTERED PROFESSIONAL ENGINEER
KRISTINA P. ALACON
No. C70952
CIVIL
STATE OF CALIFORNIA
05-29-2020

DATE MAY 2020
PROJECT NUMBER 17-082
DRAWING NUMBER SD-17
SHEET NUMBER 231

FILENAME: 1782D-SD801.dgn PLOT DATE: 5/23/2020 11:20:12 AM