City of Morro Bay
Water Reclamation Facility Project

# Revised Final Plan
# SPECIAL CONDITIONS NO. 1

FINAL | October 2019

City of Morro Bay
Water Reclamation Facility Project

# Revised Final Plan
# SPECIAL CONDITION NO. 1

FINAL | October 2019

# Contents

Section 1 - PROJECT BACKGROUND 1

Section 2 - PROJECT COMPONENTS 2

Section 3 - DOCUMENT PURPOSE 3

Section 4 - RESPONSE MATRIX 3

# Appendices

Appendix A Architectural Color Renderings

Appendix B Landscaping Exhibit

Appendix C Coastal Development Permit Plans from Filanc/Black & Veatch (FBV) dated July 30, 2019

Appendix D Morro Bay Water Reclamation Facility Hydrology Report dated July 31, 2019

# Tables

Table 1 CCC CDP Special Conditions No. 1 5

# Abbreviations

| | |
|---|---|
| BOD | biochemical oxygen demand |
| CCC | California Coastal Commission |
| CDP | Coastal Development Permit |
| City's | City of Morro Bay |
| CWA | Clean Water Act |
| EIR | Environmental Impact Report |
| FBV | Filanc/Black & Veatch |
| mgd | million gallons per day |
| NOI | Notice of Intent |
| RWQCB | Regional Water Quality Control Board |
| TSS | total suspended solids |
| WRF | Water Reclamation Facility |
| WRF BODM | Water Reclamation Facility Basis of Design Memorandum |
| WRF SWPPP | Water Reclamation Facility Stormwater Pollution Prevention Plan |
| WRFCAC | Water Reclamation Facility Citizens Advisory Committee |

Section 1

# PROJECT BACKGROUND

On July 11, 2019, the California Coastal Commission (CCC) approved Coastal Development Permit (CDP) 3-19-0463 for the City of Morro Bay's (City's) Water Reclamation Facility (WRF) Project. On July 19, 2019, the City received the Notice of Intent (NOI) for the CDP, which contains sixteen special conditions. Four special conditions must be met prior to issuance of the CDP or prior to construction of the WRF including:

- Special Condition No. 1 - Final Plans and Specifications
- Special Condition No. 2 - Construction Plan
- Special Condition No. 6 - Recycled Water Management Plan
- Special Condition No. 13 - Other Authorizations

The existing Morro Bay-Cayucos wastewater treatment plant is located at 160 Atascadero Road in Morro Bay and is jointly owned and operated by the City of Morro Bay (City) and the Cayucos Sanitary District. The wastewater treatment plant was originally built in 1954 in a low-lying area near the confluence of Morro Creek with the Pacific Ocean, and it provides wastewater treatment services to the City and to the unincorporated community of Cayucos approximately six miles to the north. The wastewater treatment plant was built before modern state and federal water quality standards, and does not meet federal Clean Water Act (CWA) standards for full secondary treatment. Instead, the wastewater treatment plant has been operating under a CWA waiver for full secondary treatment requirements for biochemical oxygen demand (BOD) and total suspended solids (TSS) since 1984. In 2018, the City received a time schedule order from the Central Coast Regional Water Quality Control Board (RWQCB) requiring compliance with full CWA secondary treatment requirements by February 28, 2023.

Because of the age of the existing wastewater treatment plant, its failure to meet core CWA water quality standards and the possibility of potential fines/penalties for failure to meet the RWQCB's mandate for CWA compliance by 2023, the City has been pursuing a new upgraded wastewater treatment facility for more than a decade. The City and the Cayucos Sanitary District initially proposed to redevelop the wastewater treatment plant at its current site, but the Coastal Development Permit (CDP) was appealed to the California Coastal Commission (CCC), and ultimately in 2013, the CCC denied the City's redevelopment-in-place proposal on the basis of inconsistencies regarding avoiding coastal hazards, land use priorities, recycled water provisions and public view protections.

Following the CDP denial and given the CCC's direction to the City and the Cayucos Sanitary District on the appropriate path to upgraded wastewater and water reclamation functions, the City developed a Water Reclamation Facility Citizens Advisory Committee (WRFCAC), identified 17 potential sites for plant relocation, and developed criteria for a potential water reclamation facility project, including coastal hazards avoidance through plant relocation inland, water quality improvement through compliance with applicable water quality standards, and water supply security through recycled water provision. Over the past six and a half years, through

significant public input that shaped this project, including making critical decisions in public forums regarding WRF siting (e.g., in town vs. outside of town), components/operations, recycled water end uses (e.g., agricultural uses only or full potable reuse), funding (e.g., through two City-wide votes to raise utility fees to pay for the project), and process (i.e., two public hearings to approve the project Environmental Impact Report and two affirmative votes by the Morro Bay City Council and County Board of Supervisors to authorize a consolidated CDP approval process).

This proposed Project meets Coastal Act consistency on many fronts—for the protection and enhancement of coastal resources, for providing essential public services to Morro Bay residents and visitors, and for providing adaptation and resiliency in an era of increased hazards exacerbated by climate change. The Commission directed the City to propose a project of this type back in 2013, finding that a project that perpetuated the City's water and wastewater status quo was not appropriate or consistent with the Coastal Act. The City responded to the CCC's directive, and the proposed project is the end result that addresses the Coastal Act concerns previously raised by the CCC in a way that provides a more sustainable wastewater and water supply future for the City.

## Section 2

# PROJECT COMPONENTS

The City's WRF project involves replacing the City's existing wastewater treatment plant with an advanced water purification facility that will meet state regulations, protect the environment, and contribute a safe and reliable water source for Morro Bay's homes and businesses. The project will create a drought buffer and will be capable of providing up to 80 percent of the City's water needs in the future.

The Project includes construction of a new one million gallon per day (mgd) advanced treatment facility on South Bay Boulevard north of Highway 1, two new lift stations, approximately 3.5 miles of pipelines and wells to inject the purified water into the groundwater aquifer, which can be extracted for reuse through the City's existing infrastructure. The current schedule includes construction beginning in 2019 and project completion by 2023.

Section 3

# DOCUMENT PURPOSE

This document describes the proposed measures to be taken by the City to address the requirements of Special Conditions No. 1 – Final Plans and Specifications listed in the NOI to Issue CDP 3-19-0463 for the City's WRF Project.

The City is taking a phased approach to meeting Special Condition No. 1 for the CDP. As described above, the Project is being delivered via three distinct construction efforts: WRF, Conveyance Facilities (i.e., pipelines and pump stations), and Recycled Water Facilities (i.e., injection wells). The Final Plans and Specifications described herein are specific to the WRF, which will begin construction in October 2019. Following the WRF, the next Project element that will begin construction is the Conveyance Facilities. The City will submit the Conveyance Facilities Final Plans and Specifications to the Executive Director for review and approval in the spring of 2020. The City will submit separate Recycled Water Facilities Final Plans and Specifications to the Executive Director at the appropriate time when that design has been completed. Construction of the Conveyance Facilities and Recycled Water Facilities will not begin until the Executive Director reviews and approves the designs and authorizes construction.

Section 4

# RESPONSE MATRIX

Table 1 lists the requirements included in Special Condition No. 1, the City's description of how the requirement is being addressed, and reference material that provides the detailed information on project features that address the requirement. The following documents are appended to this report and are referenced in the responses:

1. Appendix A: Architectural Color Renderings
2. Appendix B: Landscaping Exhibit
3. Appendix C: Coastal Development Permit Plans from Filanc/Black & Veatch (FBV) dated July 30, 2019 (Plans).
4. Appendix D: Morro Bay Water Reclamation Facility Hydrology Report and Post Construction Stormwater Control Plan dated July 31, 2019 (WRF Hydrology Report)

Also referenced in Table 1 are the following documents that have been provided to the CCC at a prior date:

1. Morro Bay Water Reclamation Facility Draft Environmental Impact Report Dated March 2018 (WRF EIR)
2. Basis of Design Memorandum from Filanc/Black & Veatch (FBV) dated May 02, 2019. (WRF BODM)

Table 1 CCC CDP Special Conditions No. 1

| Section | Title | Special Condition Required by CDP | City of Morro Bay Response | Reference Material |
|---|---|---|---|---|
| 1 | Revised Final Plans | Permittee shall submit two full size sets of Revised Final Plans with graphic scale to the Executive Director for review and approval | The City is continuing to advance the WRF design and received the Plans on 30 July 2019. The design is being prepared under the direction of a licensed professional engineer and is based on current professionally surveyed topographic elevations for the entire site. The Coastal Development Permit Plans is in substantial conformance with the plans received in the Coastal Commission's Central Coast District office on 10 June 2019 and include more detail on design features to achieve compliance with this condition. | Appendix C: Coastal Development Permit Plans |
| 1 | Revised Final Plans | Revised Final Plans shall be prepared by a licensed professional or professionals (i.e., architect, surveyor, geotechnical engineer, etc.), and shall be based on current professionally surveyed topographic elevations for the entire site | | |
| 1 | Revised Final Plans | Revised Final Plans shall be substantially in conformance with the proposed plans (prepared by Black & Veatch (dated February 2019) and dated received in the Coastal Commission's Central Coast District office on June 10, 2019) but shall be modified to achieve compliance with this condition | | |
| 1(a) | Water Reclamation Facility (WRF) Approved Development Envelope | All WRF development (including but not limited to buildings, tanks, infrastructure, parking, walkways, fences, etc.) shall be located within the development envelope and in the general configuration shown on Exhibit 1. | All WRF development is shown on the Plans and will be located within the grading limit line identified in Sheet 10-C-001 which is pursuant to the development envelope per Special Condition 1(a), except for habitat restoration and enhancement-related development and access road development. | Appendix C: Coastal Development Permit Plans |
| 1(a) | Water Reclamation Facility (WRF) Approved Development Envelope | Development shall be prohibited outside of the approved development envelope except for habitat restoration and enhancement related development (see Special Condition 3 below) and access road related development. | | |
| 1(a) | Water Reclamation Facility (WRF) Approved Development Envelope | All development shall be identified on the Revised Final Plans. | | |
| 1(b) | Water Reclamation Facility Design | The design and appearance of all WRF development shall reflect a rural agricultural theme (i.e., simple and utilitarian lines and materials, including use of board-and-batten siding, corrugated metal, muted earth tone colors, etc.). | Per the WRF BODM, Chapter 7, section 7.1, walls, roof forms, exterior colors schemes, and landscaping screening are designed to meet the City's desire for an appearance from Highway 1 scenic corridor that is recognizably agricultural, giving the overall impression typical of a dairy farm or ranch.<br><br>The Plans includes architectural design drawings and perspective drawings that show the materials that will be used in the construction of WRF buildings. The architectural components are shown and described in the color renderings included in A 1.<br><br>Civil Sheets 11-C-101 through 11-C-105 of the Plans show curb and gutters, signs, drainage facilities, and civil elements. Appendix B shows the proposed landscaping to be used on the site. | Appendix A: Architectural Color Renderings.<br>Appendix C: Coastal Development Permit Plans<br>WRF BODM |

| Section | Title | Special Condition Required by CDP | City of Morro Bay Response | Reference Material |
|---|---|---|---|---|
| 1(b) | Water Reclamation Facility Design | Development shall be sited and designed so as to reduce its visibility from Highway 1 to the maximum extent possible. | Section 5.6 of Basis of Design Memo states:<br>*The Operations building is secured with a combination of decorate fence where visible from Highway 1 and chain-link fence in less visible locations. Location and orientation of site above and to the East of Highway 1 decreases visibility of the WRF.*<br><br>Additionally, as stated in the EIR, Impact 3.1-1:<br>*The proposed project would not have an adverse effect on scenic vistas. The proposed project would not have sufficient scale or height to significantly affect scenic vista. The WRF would be briefly visible from Highway 1, but would resemble rural agricultural buildings similar to others along Highway 1 corridor. That impact would be Class III, less than significant.*<br><br>And as stated in the EIR, Impact 3.1-2:<br>*The proposed project would be visible from Highway 1 and State Route 41 corridors, a State Scenic Highway and Eligible Scenic Highway, respectively. However implementation of specific design criteria for development would ensure that scenic resources would not be adversely effected by implementation of proposed facilities. This impact would be Class III, Less than Significant.* | WRF BODM<br>Morro Bay Water Reclamation Facility Draft EIR |
| 1(b) | Water Reclamation Facility Design | At a minimum, the plans shall clearly identify all structural elements, materials, and finishes (including through site plans and elevations, materials palettes and representative photos, product brochures, etc.). | The WRF BODM describes the general approach that will be used for structural elements, materials, and finishes, and the Plans provides more detail. Structural elements, materials, and finishes are shown and described in the color renderings included in Appendix 1. | Appendix A: Architectural Color Renderings<br>Appendix C: Coastal Development Permit Plans<br>WRF BODM |
| 1(b) | Water Reclamation Facility Design | Development shall blend with the natural topography as much as possible, and grading and retaining walls shall be minimized. | The WRF and overall site will blend with the natural topography as much as possible, and grading and retaining walls have been minimized, as shown on Sheets 10-C-101 through 10-C-104 and 10-C-301 through 10-C-302 in the Plans. Earthwork spoils are to be hauled to the hillside fill area on sheet 10-C-104 as needed to balance the excavation required for the site. | Appendix C: Coastal Development Permit Plans<br>WRF BODM |
| 1(c) | Pump Stations and Related Development Design | All pump stations and all related development, including all power boxes and buildings, shall be sited and designed to limit impacts on public views as much as possible, | The IPR and Outfall Pump Stations are sited towards the back of the WRF site, as shown on Sheet 11-C-104 of the Plans. Elements associated with the pump station are either housed in buildings, underground, or enclosed in a canopy structure. Both the IPR and the outfall pump stations are on above ground foundations connecting to underground yard piping and process infrastructure | Appendix C: Coastal Development Permit Plans |
| 1(c) | Pump Stations and Related Development Design | Including through limiting their footprint, siting elements below ground, minimizing the scale of any necessary above-ground elements, limiting above-ground access components (including manhole/hatch entries), using surface treatment and structural design consistent with and compatible with the immediately surrounding environment, | | |
| 1(c) | Pump Stations and Related Development Design | Limiting lighting to that necessary for public safety, | Lighting is provided for operational safety. The suggested foot candle loading for areas on site is described in the WRF BODM on Table 9-1 in Section 9.9 – Lighting Design Criteria. Sheet 10-E-111 in the Plans shows the lighting that will be used in outside areas. | Appendix C: Coastal Development Permit Plans<br>WRF BODM |

| Section | Title | Special Condition Required by CDP | City of Morro Bay Response | Reference Material |
|---|---|---|---|---|
| 1(c) | Pump Stations and Related Development Design | Removing non-native invasive plant species and landscaping with appropriate native plant materials (see also Special Condition 1(d)) including so that landscaping can help soften the appearance of any elements that are unavoidably above ground | The existing vegetation on the site will be removed for the site development, as shown on Sheet 10-C-002 of the Plans. Appendix B identifies the areas that will be landscaped with drought tolerant native plant species. Additionally, all disturbed areas that are not to be paved or landscaped will be hydroseeded per local requirements as described in the WRF BODM in Section 5.4.2 – Finished Site Erosion Control.,. | Appendix B: Landscaping Exhibit<br>Appendix C: Coastal Development Permit Plans<br>WRF BODM |
| 1(c) | Pump Stations and Related Development Design | To ensure seamless connectivity to the surrounding habitat and vegetation as much as possible. | Per the grading plan, the existing vegetation of the site both non-native and native will be removed for the site development. Landscaping with drought tolerant native plant species are to be provided in landscaping plans as shown in Attachment 7. Additionally, as stated in section 5.4 of the WRF BODM, section 5.4.2 Finished Site Erosion Control, all disturbed areas that are not to be paved or landscaped will be hydroseeded per local requirements. | Appendix C: Coastal Development Permit Plans<br>Appendix B: Landscaping Exhibit<br>WRF BODM |
| 1(d) | Landscaping | Final Revised Plans shall include a landscape plan for the areas surrounding the WRF, pump stations, and other related development, where such landscaping shall be consist of native, non-invasive, and drought-tolerant species that provide appropriate screening and softening of development features in public views as much as possible. | Landscaping plan for surrounding areas provided in Appendix B: Landscaping Exhibit. Landscaping to follow section 5.5 of the Basis for Design Memo by including non-invasive drought tolerant plant species that provide necessary landscaping and the appropriate screening. Landscaping in existing stormwater basins to be clumping grasses for stormwater quality measures and native grasses hydroseeded on the slopes for erosion control. Screening of site from public to be accomplished via decorative screening fence as displayed in landscaping exhibit. | Appendix B: Landscaping Exhibit<br>Appendix C: Coastal Development Permit Plans |
| 1(d) | Landscaping | The landscape plan shall require all non-native plants on the site to be removed and the site kept free of such plants for as long as any portion of the approved development exists at this site. | | |
| 1(d) | Landscaping | The landscape plan shall provide that all landscaped areas on the project site shall be maintained in a litter-free, weed-free, and healthy growing condition. | | |
| 1(d) | Landscaping | No plant species listed as problematic and/or invasive by the California Native Plant Society, the California Invasive Plant Council, or as may be so identified from time to time by the State of California, and no plant species listed as a "noxious weed" by the State of California or the U.S. Federal Government shall be planted or allowed to naturalize or persist on the site. | | |
| 1(e) | Lighting Minimized | Exterior lighting shall be wildlife-friendly, shall use lamps that minimize the blue end of the spectrum, and shall be limited to the minimum lighting necessary for pedestrian and vehicular safety purposes. | Lighting is provided only for operational safety. The suggested foot candle loading for areas on site is described in the WRF BODM on Table 9-1 in section 9-9 – Lighting Design Criteria. Sheet 10-E-111 in the Plans show the lighting that will be used in outside area. Lighting meets San Luis Obispo County Municipal Code Standards and does not cause a visual Impact to Highway 1.<br><br>As stated in the EIR, Impact 3.1 -1:<br>*The proposed project would not have an adverse effect on scenic vistas. The proposed project would not have sufficient scale or height to significantly affect scenic vista. The WRF would be briefly visible from Highway 1, but would resemble rural agricultural buildings similar to others along Highway 1 corridor. That impact would be Class III, less than significant.* | Appendix C: Coastal Development Permit Plans<br>Morro Bay Water Reclamation Facility Draft EIR<br>WRF BODM |

| Section | Title | Special Condition Required by CDP | City of Morro Bay Response | Reference Material |
|---|---|---|---|---|
| 1(f) | Windows and Other Surfaces | All windows shall be non-glare glass, and all other surfaces shall be similarly treated to avoid reflecting light, and all windows shall be bird-safe (i.e., windows shall be frosted, partially frosted, or otherwise treated with visually permeable barriers that are designed to prevent bird strikes). | Window surface treatment to be coordinated with Design Build Team to meet EIR aesthetic lighting and glare provisions and Special Condition 1.f. Completed window schedule to be provided in Final Specifications and plans as applicable. | Morro Bay Water Reclamation Facility Draft EIR |
| 1(g) | Utilities | Revised Final Plans shall clearly identify all utilities (e.g., water, stormwater, gas, electrical, telephone, data, etc.) and the way in which they will be connected to inland distribution networks. | All utilities are shown on civil sheets on the Plans. See sheets 12-C-001 through 12-C-004. Piping section and details are to be provided on the final plans. See sheets 12-C-301 through 303. | Appendix C: Coastal Development Permit Plans |
| 1(g) | Utilities | All such utilities shall be located underground. | | |
| 1(h) | Stormwater and Drainage | The Revised Final Plans shall clearly identify all stormwater and drainage infrastructure and related water quality measures (e.g., pervious pavements, etc.), with preference given to natural BMPs (e.g., bioswales, vegetated filter strips, etc.). | Appendix D: Hydrology Report outlines the design and drainage characteristics of the north and south process areas of the WRF site. The North Process area drains to the North Stormwater Detention Basin. Drainage is routed via sheet-flow on the roadway to a curb and gutter running on the eastern side of the site and is intercepted by a trench with grating that routes the flow across the road into the detention basin. This basin is equipped with an outlet control and pumping station which allows water from this basin to be pumped to the plant headworks to capture and treat first flush water from the first seasonal storm.<br><br>The south process area drainage is routed via sheet-flow on the roadways to a curb and gutter running on the eastern side of the site and is intercepted by a trench with grating that routes the flow across the road into the detention basin. An outlet control structure is provided to regulate the discharge rate from the detention basin to the dry creek. Operators can capture first flush flows without discharge to the dry stream. There is no pump on the south basin.<br><br>Hillside drainage is separated from the onsite drainage. The Plans show concrete swale channels capture the hillside drainage and route to culverts that pass beneath the site and drain to the discharge level spreaders to reduce the sheet flow velocity for erosion control and ultimately to the dry stream south of the project.<br><br>The Hydrology report states the onsite detention ponds and the drainage swales are designed to the 100 year design storm and discharge at pre-development rates. All swales and ponds have a minimum freeboard of 1 foot. Detention basins will be lined with clumping grasses on the bottom for stormwater quality measures with native grasses lining the slopes for erosion control, see Appendix B: Landscaping exhibit.<br><br>This project is designed to the 100 year storm event using a time of concentration of ten minutes. Both detention basin outlets are set 6 inches above the basin floor to allow sediment to settle out prior to being discharged to either the headworks or the flow dissipaters/dry stream. The hydrology report calculations utilize the 100 year flows for the storm drainage design. Runoff as a result of the 85th percentile 24 hour storm event shall be captured in the proposed storm drainage system. | Appendix C: Coastal Development Permit Plans<br>Appendix B: Landscape Exhibit<br>Appendix D: WRF Hydrology Report |

| Section | Title | Special Condition Required by CDP | City of Morro Bay Response | Reference Material |
|---|---|---|---|---|
| 1(h) | Stormwater and Drainage | In extreme storm situations (i.e., greater than the 85th percentile 24-hour runoff event storm) where such runoff cannot be adequately accommodated onsite through the project's stormwater and drainage infrastructure, any excess runoff shall be conveyed inland offsite in a non-erosive manner. | | |
| 1(h) | Stormwater and Drainage | All drainage system elements shall be permanently operated and maintained, and the plans shall identify all maintenance parameters for all stormwater and drainage infrastructure and related water quality measures, including based on manufacturers recommendations, which shall be provided. | | |
| 1(h) | Stormwater and Drainage | At a minimum, all traps/separators and/or filters shall be inspected to determine if they need to be cleaned out or repaired prior to October 15th each year, prior to April 15th each year, and during each month that it rains between November 1st and April 1st. | Per the WRF Hydrology Report, the only pipes in the area are those that convey runoff to the Discharge Level Spreaders and pipes that connect the grated trenches to the storm basins. Pipes from the basins have an outlet control stand pipe. There are not traps, separators, or filters in this project. | Appendix D: WRF Hydrology Report<br>Appendix C: Coastal Development Permit Plans |
| 1(h) | Stormwater and Drainage | Clean-out and repairs (if necessary) shall be done as part of these inspections. At a minimum, all traps/separators and/or filters must be cleaned prior to the onset of the storm season, no later than October 15th of each year. | | |
| 1(h) | Stormwater and Drainage | Debris and other water pollutants removed from filter devices during clean-out shall be contained and disposed of in a proper manner. | | |
| 1(h) | Stormwater and Drainage | All inspection, maintenance and clean-out activities shall be documented in an annual report submitted to the City Public Works Department no later than June 30th of each year. | Each year the City completes and submits an Annual Report online to the Central Coast Regional Water Quality Control Board via the Water Boards' SMARTS website. This storm drainage system will be included in the City's operations strategy in order to be permitted through the State. Additionally, City Stormwater Management Division maintains all storm drain facilities and creeks on public property or easements within the City. | City of Morro Bay Public Works Website - Stormwater Management Annual Reporting and Maintenance (https://www.morro-bay.ca.us/257/Stormwater-Management) |
| 1(h) | Stormwater and Drainage | It is the Permittee's responsibility to maintain the drainage system in a structurally sound manner and its approved state. All requirements above and all requirements of the approved Revised Final Plans shall be enforceable components of this CDP. The Permittee shall undertake development in conformance with this condition and the approved Revised Final Plans. | | |

Appendix A

# ARCHITECTURAL COLOR RENDERINGS

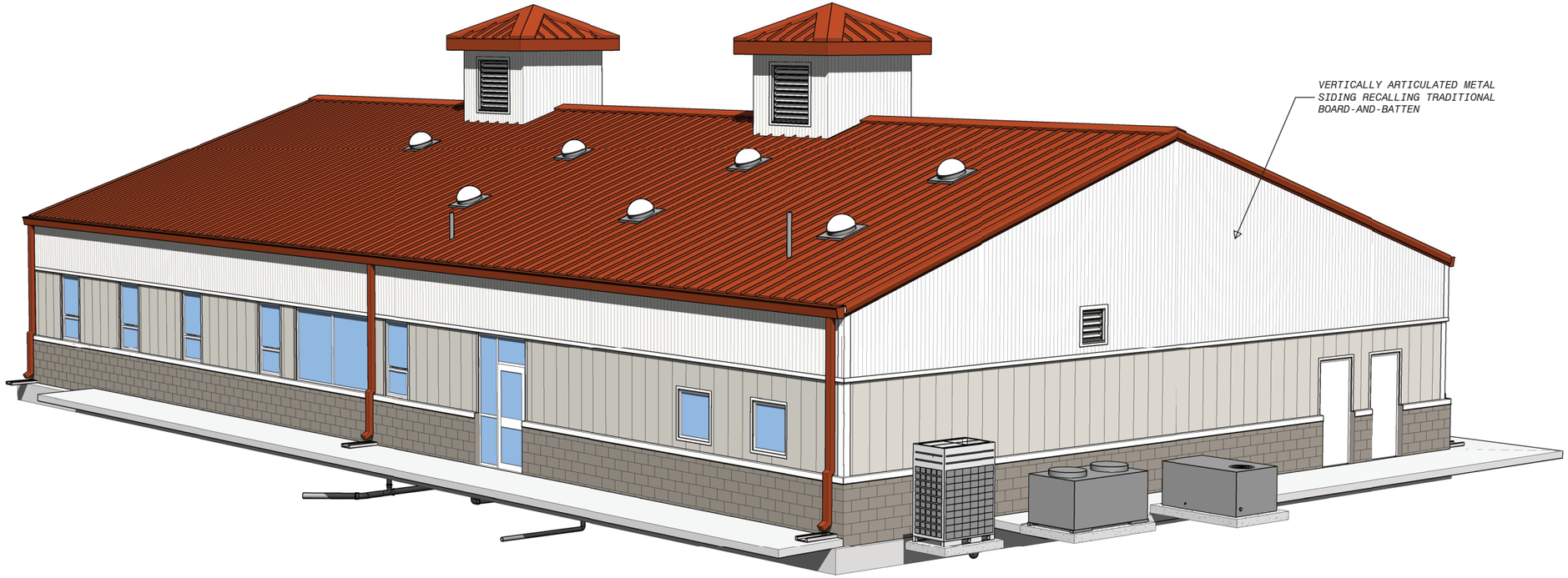


NORTHWEST PERSPECTIVE

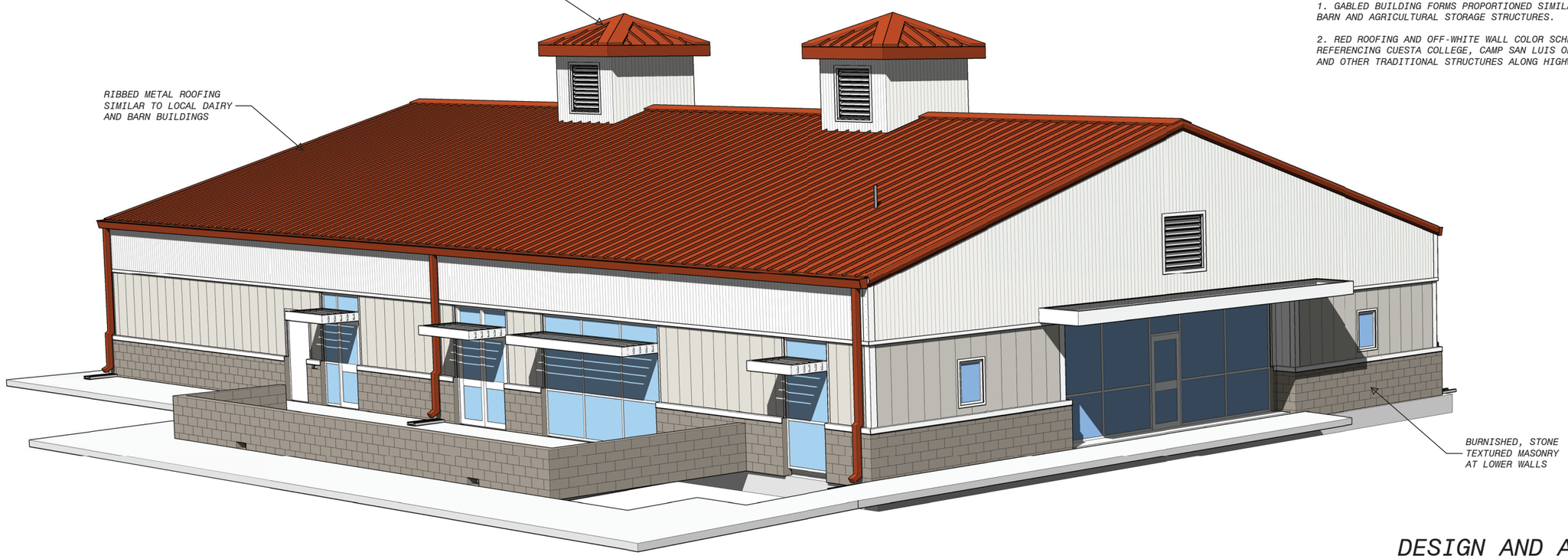


SOUTHEAST PERSPECTIVE

NOTES:

1. GABLED BUILDING FORMS PROPORTIONED SIMILARLY TO BARN AND AGRICULTURAL STORAGE STRUCTURES.

2. RED ROOFING AND OFF-WHITE WALL COLOR SCHEME REFERENCING CUESTA COLLEGE, CAMP SAN LUIS OBISPO, AND OTHER TRADITIONAL STRUCTURES ALONG HIGHWAY 1.

DESIGN AND APPEARANCE

60% SUBMITTAL - NOT FOR CONSTRUCTION

| DATE | REVISIONS AND RECORD OF USE | NO. | BY | CHK | APP |
|---|---|---|---|---|---|
| 7/30/2019 | 60% SUBMITTAL | B | EVB | BDF | EVB |
| 3/5/2019 | 30% SUBMITTAL | A | EVB | BDF | EVB |

FRASER SEIPLE ARCHITECTS

JOINT VENTURE

FILANC®

BLACK & VEATCH

CITY OF MORRO BAY
MORRO BAY WATER RECLAMATION FACILITY (WRF)

OPERATIONS BUILDING
ARCHITECTURAL PERSPECTIVES

DESIGNED: BDF
DETAILED: ANH
CHECKED: -
APPROVED: -
DATE:

0 1/2 1

IF THIS BAR DOES NOT MEASURE 1" THEN DRAWING IS NOT TO FULL SCALE

PROJECT NO. 400530

95-A-001

SHEET OF

PLOTTED: 9/17/2019 4:22:03 PM

D400530

NORTHEAST PERSPECTIVE

NO SCALE

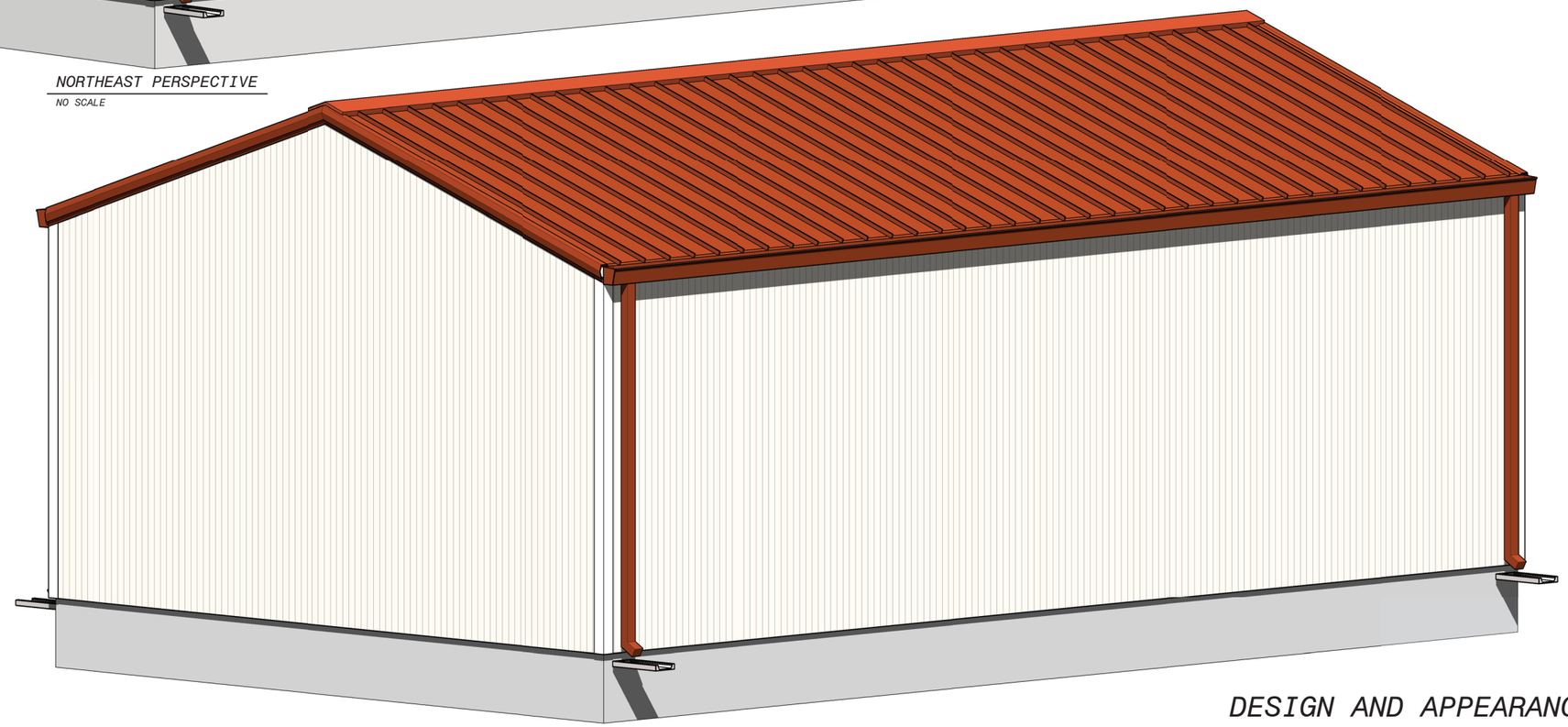

SOUTHWEST PERSPECTIVE

NO SCALE

DESIGN AND APPEARANCE

60% SUBMITTAL - NOT FOR CONSTRUCTION

| DATE | REVISIONS AND RECORD OF USE | NO. | BY | CHK | APP |
|---|---|---|---|---|---|
| 7/30/2019 | 60% SUBMITTAL | B | BDF | BDF | EVB |
| 3/5/2019 | 30% SUBMITTAL | A | BDF | BDF | EVB |

FRASER SEIPLE ARCHITECTS

JOINT VENTURE

BLACK & VEATCH

FILANC

CITY OF MORRO BAY
MORRO BAY WATER
RECLAMATION FACILITY (WRF)

WATER AND COLLECTION SUPPLIES STORAGE SHED
ARCHITECTURAL
PERSPECTIVES

DESIGNED: EVB
DETAILED: ANH
CHECKED: -
APPROVED: -
DATE:

0 1/2 1

IF THIS BAR DOES NOT MEASURE 1" THEN DRAWING IS NOT TO FULL SCALE

PROJECT NO.
400530

16-A-001

SHEET
OF

PLOTTED: 9/17/2019 4:27:51 PM

D400530

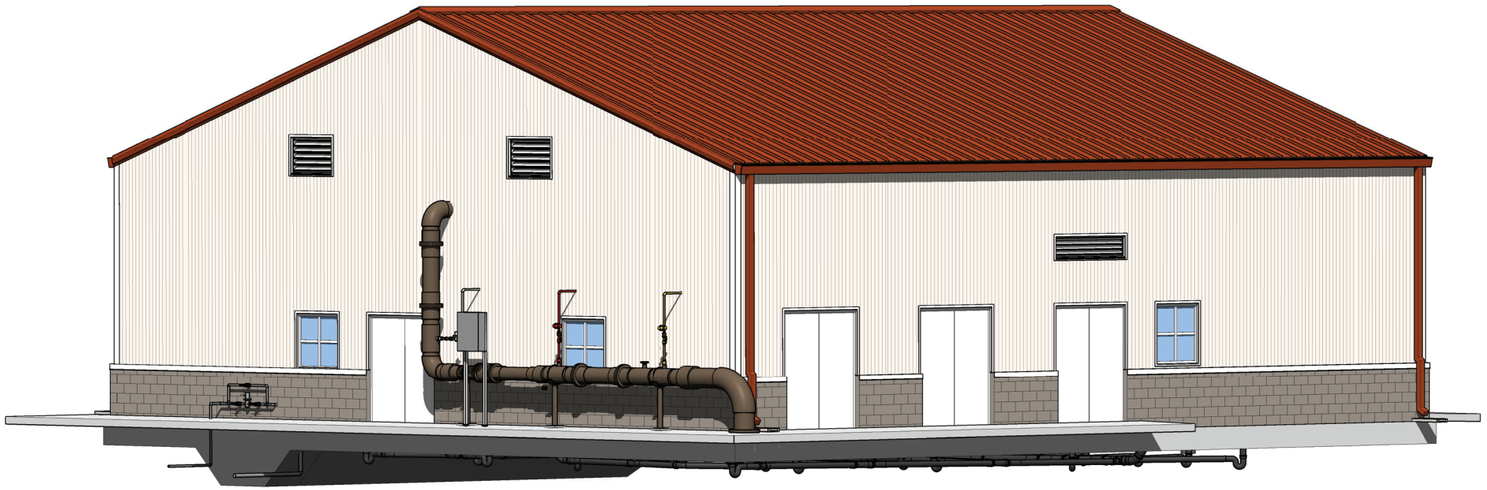

NORTHWEST PERSPECTIVE

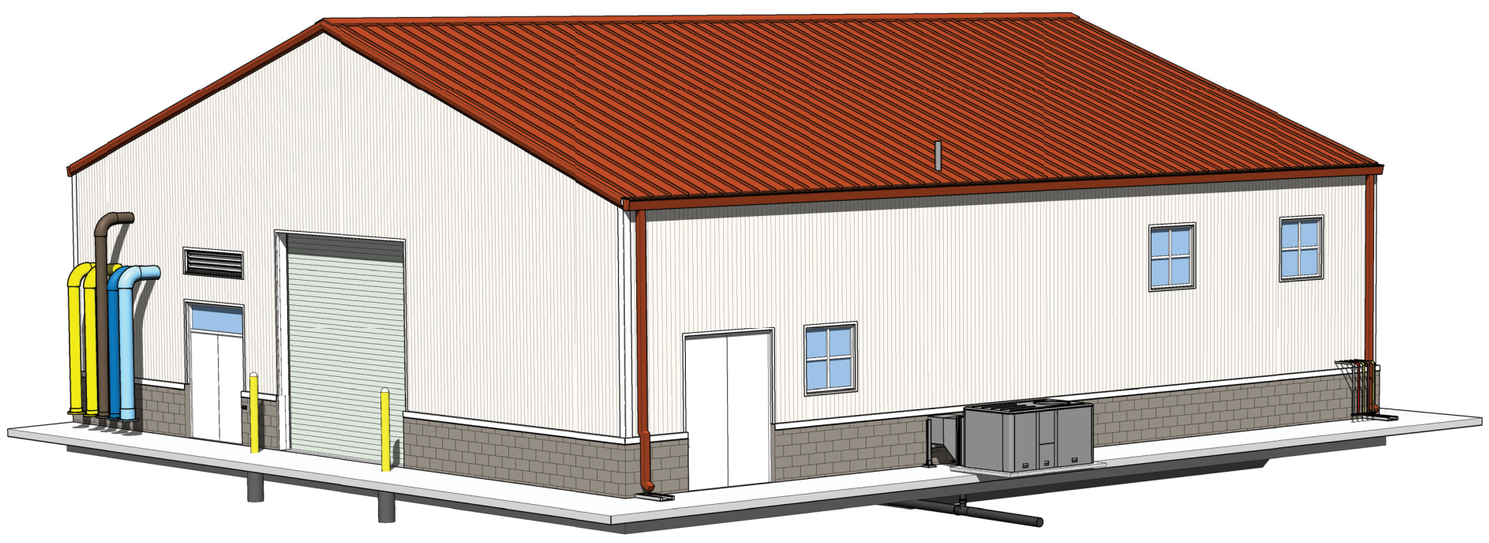

SOUTHEAST PERSPECTIVE

DESIGN AND APPEARANCE

60% SUBMITTAL - NOT FOR CONSTRUCTION

| NO. | BY | CHK | APP | DATE | REVISIONS AND RECORD OF USE |
|---|---|---|---|---|---|
| B | BDF | BDF | EVB | 7/30/2019 | 60% SUBMITTAL |
| A | BDF | BDF | EVB | 3/5/2019 | 30% SUBMITTAL |

FRASER SEIPLE ARCHITECTS

JOINT VENTURE

FILANC®

BLACK & VEATCH

CITY OF MORRO BAY
MORRO BAY WATER
RECLAMATION FACILITY (WRF)

RO/UV BUILDING
ARCHITECTURAL
PERSPECTIVES

DESIGNED: BDF
DETAILED: ANH
CHECKED: -
APPROVED: -
DATE:

0 1/2 1

IF THIS BAR DOES NOT MEASURE 1" THEN DRAWING IS NOT TO FULL SCALE

PROJECT NO.
400530

50-A-001
SHEET
OF

PLOTTED: 9/17/2019 4:26:17 PM
D400530

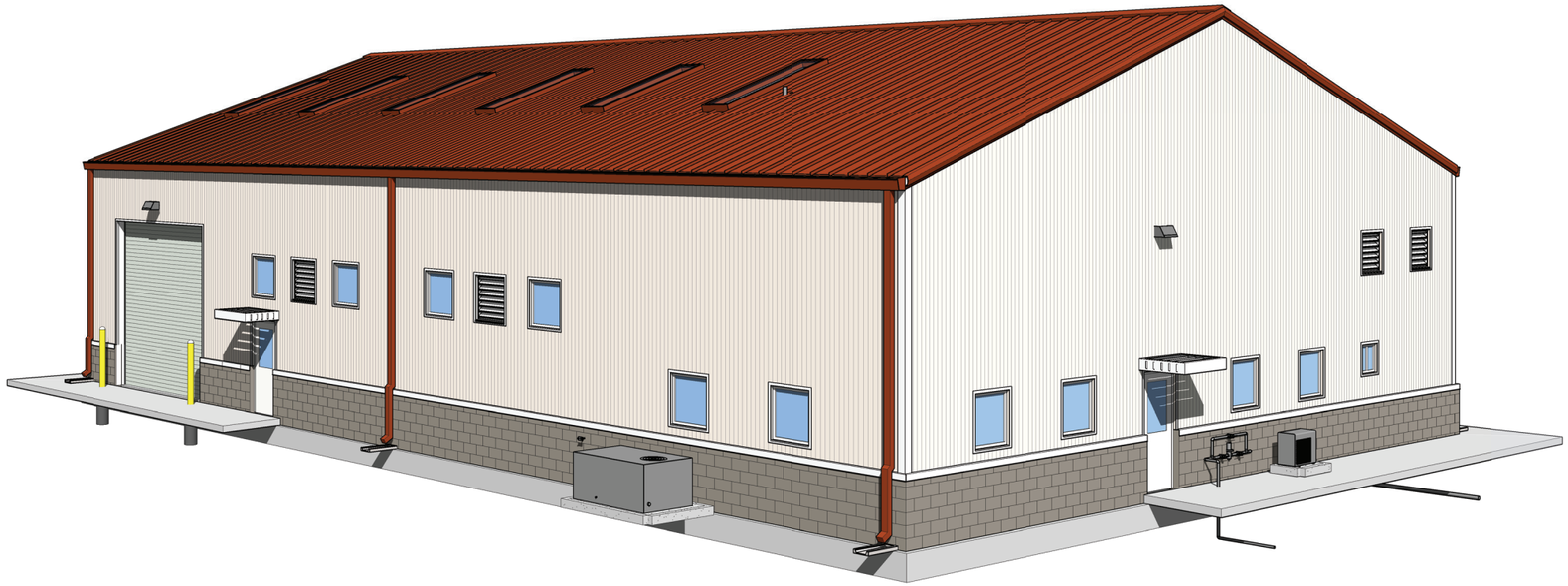

NORTHEAST PERSPECTIVE

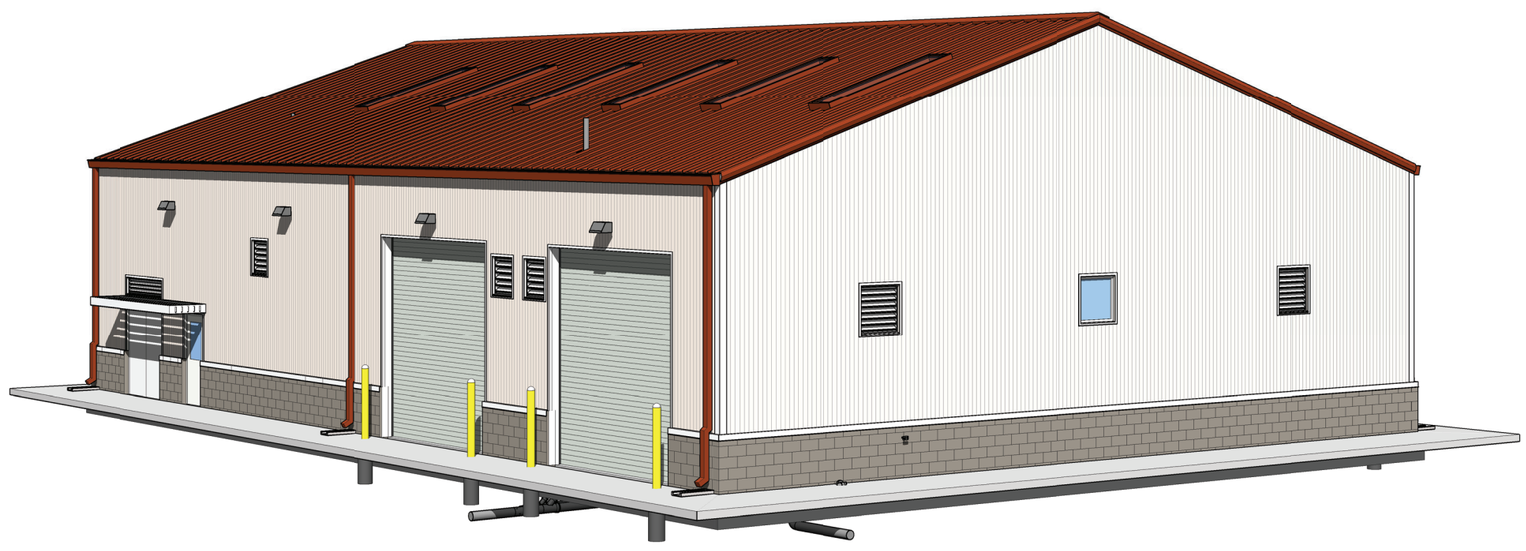

SOUTHWEST PERSPECTIVE

DESIGN AND APPEARANCE

60% SUBMITTAL - NOT FOR CONTRUCTION

| NO. | BY | CHK | APP | DATE | REVISIONS AND RECORD OF USE |
|---|---|---|---|---|---|
| B | BDF | BDF | EVB | 7/30/2019 | 60% SUBMITTAL |
| A | BDF | BDF | EVB | 3/5/2019 | 30% SUBMITTAL |

FRASER SEIPLE ARCHITECTS

JOINT VENTURE

FILANC®

BLACK & VEATCH

CITY OF MORRO BAY
MORRO BAY WATER
RECLAMATION FACILITY (WRF)

MAINTENANCE BUILDING
ARCHITECTURAL
PERSPECTIVES

DESIGNED: BDF
DETAILED: ANH
CHECKED: -
APPROVED: -
DATE:

0 1/2 1

IF THIS BAR DOES NOT MEASURE 1" THEN DRAWING IS NOT TO FULL SCALE

PROJECT NO.
400530

96-A-001

SHEET
OF

PLOTTED: 9/17/2019 4:35:42 PM

D400530

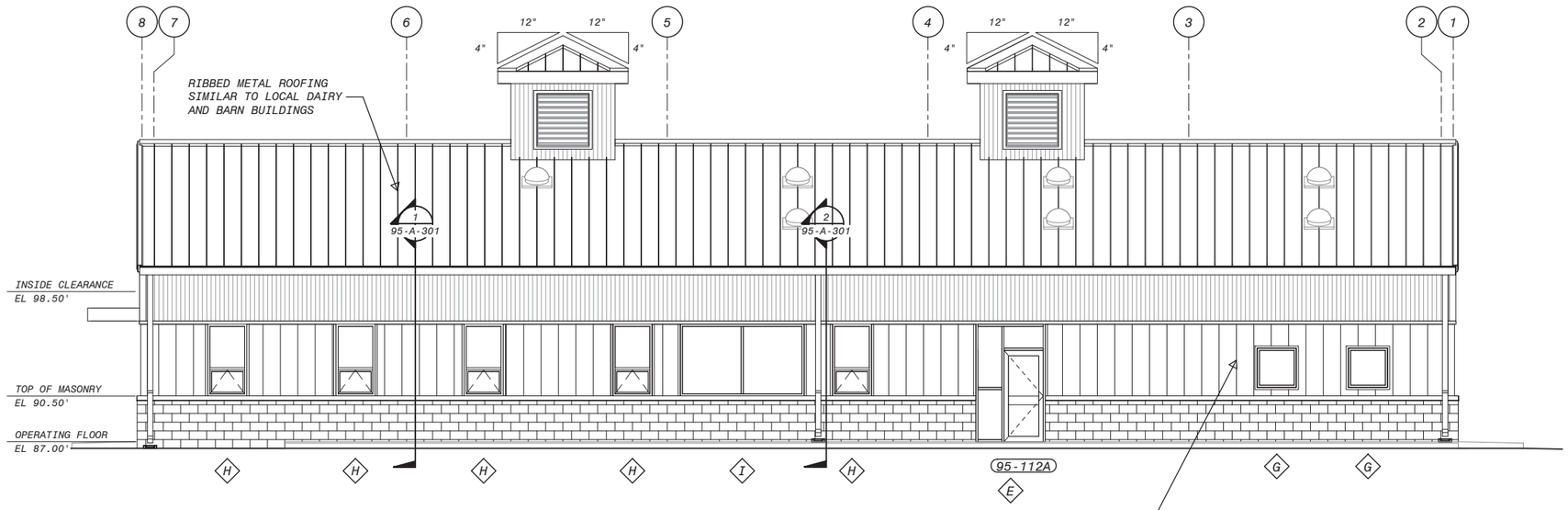


NORTH ELEVATION

3/16" = 1'-0"

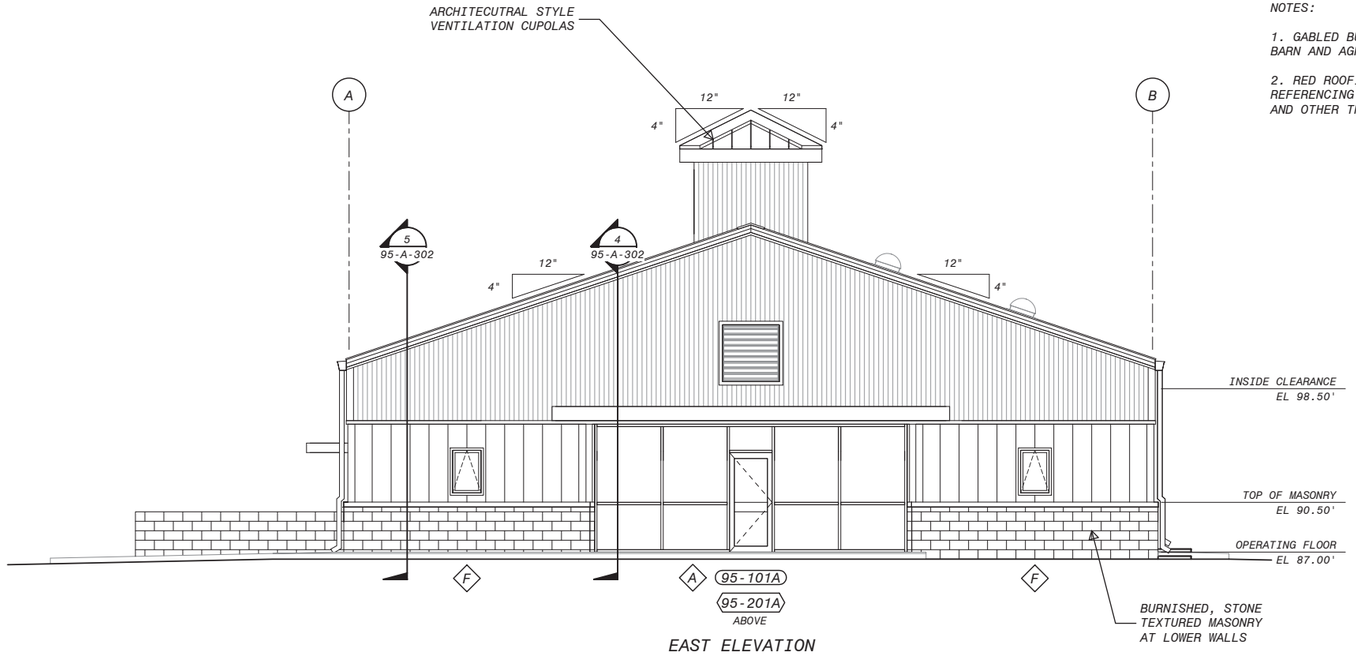


EAST ELEVATION

3/16" = 1'-0"

NOTES:

1. GABLED BUILDING FORMS PROPORTIONED SIMILARLY TO BARN AND AGRICULTURAL STORAGE STRUCTURES.

2. RED ROOFING AND OFF-WHITE WALL COLOR SCHEME REFERENCING CUESTA COLLEGE, CAMP SAN LUIS OBISPO, AND OTHER TRADITIONAL STRUCTURES ALONG HIGHWAY 1.

GENERAL SHEET NOTES

SHEET KEYNOTES

6" 4' 2' 0' 5' 10'

3/16" = 1'-0"

DESIGN AND APPEARANCE

60% SUBMITTAL - NOT FOR CONSTRUCTION

| NO. | BY | CHK | APP |
|---|---|---|---|
| B | EVB | BDF | EVB |

| DATE | REVISIONS AND RECORD OF USE |
|---|---|
| 7/30/2019 | 60% SUBMITTAL |

FRASER SEIPLE ARCHITECTS

JOINT VENTURE

FILANC®

BLACK & VEATCH

CITY OF MORRO BAY
MORRO BAY WATER
RECLAMATION FACILITY (WRF)

OPERATIONS BUILDING
ARCHITECTURAL
BUILDING ELEVATIONS

DESIGNED: BDF
DETAILED: ANH
CHECKED: -
APPROVED: -
DATE:

0 1/2 1

IF THIS BAR DOES NOT MEASURE 1" THEN DRAWING IS NOT TO FULL SCALE

PROJECT NO.
400530

95-A-201

SHEET
OF

PLOTTED: 7/29/2019 8:49:19 PM

D400530

Appendix B

# LANDSCAPING EXHIBIT

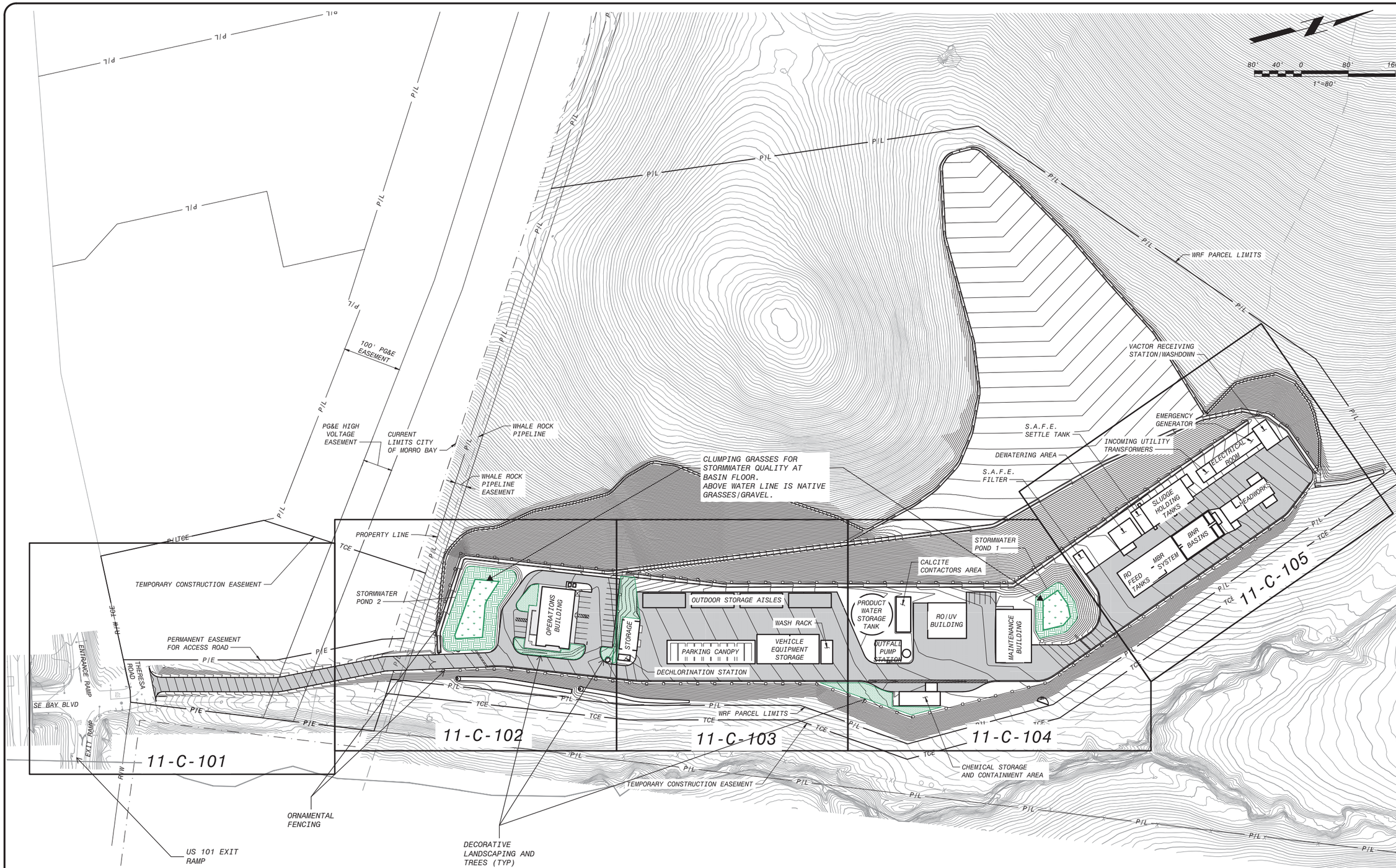


NOTES:

1. WITHIN PLANT FENCING, ALL AREAS NOT LANDSCAPED ARE COVERED WITH DECORATIVE GRAVEL

2. ALL AREAS OUTSIDE PLANT FENCE ARE HYDROSEEDED WITH NATIVE GRASSES

# LANDSCAPING AND SCREENING

60% SUBMITTAL - NOT FOR CONSTRUCTION

| NO. | BY | CHK | APP |
|---|---|---|---|
| B | EVB | RTB | EVB |
| A | ENV | RFW | EVB |

| DATE | REVISIONS AND RECORD OF USE |
|---|---|
| 7/30/2019 | 60% SUBMITTAL. |
| 3/5/2019 | 30% SUBMITTAL. |

BLACK & VEATCH

JOINT VENTURE

FILANC

BLACK & VEATCH

CITY OF MORRO BAY
MORRO BAY WATER
RECLAMATION FACILITY (WRF)

SITE - OVERALL
CIVIL
GRADING AND PAVING KEY PLAN

DESIGNED: EBV
DETAILED: SMM
CHECKED:
APPROVED:
DATE:

0 1/2 1
IF THIS BAR DOES NOT MEASURE 1" THEN DRAWING IS NOT TO FULL SCALE

PROJECT NO.
400530

11-C-001
SHEET
OF

FD9000A
D400530
PLOTTED: 7/30/2019 1:04 PM FILE: C:\pw_working\bvw_americas\d0883625\400530-11-C-001.dwg

Appendix C

# COASTAL DEVELOPMENT PERMIT PLANS FROM FILANC/BLACK & VEATCH (FBV) DATED JULY 30, 2019

# WATER RECLAMATION FACILITY

## FOR THE CITY OF:

# MORRO BAY, CA

## PREPARED BY:

JOINT VENTURE

FILANC® BLACK & VEATCH

*EXISTING MORRO BAY-CAYUCOS WASTEWATER TREATMENT PLANT*

*PROPOSED MORRO BAY WATER RECLAMATION FACILITY PARCEL*

COASTAL DEVELOPMENT PERMIT PLANS

| NO. | BY | CHK | APP |
|---|---|---|---|
| A | KEZ | RWF | EVB |
| B | KEZ | RT | EVB |

REVISIONS AND RECORD OF USE

| DATE | |
|---|---|
| 7/30/2019 | 60% SUBMITTAL |
| 3/5/2019 | 30% SUBMITTAL |

BLACK & VEATCH

JOINT VENTURE

FILANC® BLACK & VEATCH

CITY OF MORRO BAY
MORRO BAY WATER
RECLAMATION FACILITY (WRF)

GENERAL
COVER SHEET

DESIGNED: EVB, KEZ
DETAILED: MAK
CHECKED:
APPROVED:
DATE:

0 1/2 1

IF THIS BAR DOES NOT MEASURE '1' THEN DRAWING IS NOT TO FULL SCALE

PROJECT NO.
400530

00-G-001
SHEET
OF

D400530
FD81203_PW

## GENERAL

| SHEET NO. | DRAWING NO. | DESCRIPTION |
|---|---|---|
| 1 | 00-G-001 | GENERAL; COVER SHEET |
| 2 | 00-G-002 | GENERAL; SHEET LIST 1 |
| 3 | 00-G-003 | GENERAL; SHEET LIST 2 |
| 4 | 00-G-004 | GENERAL; ABBREVIATIONS |
| 5 | 00-G-005 | GENERAL; LEGEND |
| 6 | 00-G-006 | GENERAL; PROCESS SCHEMATIC |
| 7 | 00-G-007 | GENERAL; HYDRAULIC PROFILES |
| 8 | 00-G-008 | GENERAL; CODE CLASSIFICATION TABLE |
| 9 | 00-G-009 | GENERAL; POTABLE AND RECYCLED WATER SCHEMATIC |
| 10 | 00-G-010 | GENERAL; GENERAL NOTES 1 |
| 11 | 00-G-011 | GENERAL; GENERAL NOTES 2 |

## CIVIL

| SHEET NO. | DRAWING NO. | DESCRIPTION |
|---|---|---|
| 12 | 10-C-001 | SITE - OVERALL; EXISTING SITE GRADE AND FEATURES |
| 13 | 10-C-002 | SITE - OVERALL; SITE PREPARATION FINISHED GRADE OVERVIEW |
| 14 | 10-C-003 | SITE - OVERALL; ESTIMATED DEPTH FROM EXISTING GRADE TO BEDROCK |
| 15 | 10-C-004 | SITE - OVERALL; ESTIMATED DEPTH FROM SITE PREP GRADE TO BEDROCK |
| 16 | 10-C-005 | SITE - OVERALL; ESTIMATED DEPTH FROM SITE PREP GRADE TO EXISTING GRADE |
| 17 | 10-C-006 | SITE - OVERALL; SITE PREPARATION GRADING AND DRAINAGE KEY PLAN |
| 18 | 10-C-101 | SITE - AREA 1; SITE PREPARATION GRADING AND DRAINAGE PLAN |
| 19 | 10-C-102 | SITE - AREA 2; SITE PREPARATION GRADING AND DRAINAGE PLAN |
| 20 | 10-C-103 | SITE - AREA 3; SITE PREPARATION GRADING AND DRAINAGE PLAN |
| 21 | 10-C-104 | SITE - AREA 4; SITE PREPARATION GRADING AND DRAINAGE PLAN |
| 22 | 10-C-301 | SITE - OVERALL; SITE PREPARATION SECTIONS 1 |
| 23 | 10-C-302 | SITE - OVERALL; SITE PREPARATION SECTIONS 2 |
| 24 | 10-C-501 | SITE - OVERALL; SITE PREPARATION DETAILS 1 |
| 25 | 10-C-502 | SITE - OVERALL; SITE PREPARATION DETAILS 2 |
| 26 | 11-C-001 | SITE - OVERALL, GRADING AND PAVING KEY PLAN |
| 27 | 11-C-002 | SITE - OVERALL, GRADING AND PAVING OVERVIEW |
| 28 | 11-C-101 | SITE - ACCESS ROAD AREA, GRADING AND PAVING PLAN |
| 29 | 11-C-102 | SITE - SOUTH OPERATIONS AREA, GRADING AND PAVING PLAN |
| 30 | 11-C-103 | SITE - NORTH OPERATIONS AREA, GRADING AND PAVING PLAN |
| 31 | 11-C-104 | SITE - SOUTH PROCESS AREA, GRADING AND PAVING PLAN |
| 32 | 11-C-105 | SITE - NORTH PROCESS AREA, GRADING AND PAVING PLAN |
| 33 | 11-C-301 | SITE - OVERALL; GRADING AND PAVING SECTIONS AND DETAILS 1 |
| 34 | 11-C-302 | SITE - OVERALL; GRADING AND PAVING SECTIONS AND DETAILS 2 |
| 35 | 11-C-303 | SITE - OVERALL; GRADING AND PAVING SECTIONS AND DETAILS 3 |
| 36 | 11-C-304 | SITE - OVERALL; GRADING AND PAVING SECTIONS AND DETAILS 4 |
| 37 | 12-C-001 | SITE - OVERALL; PIPING KEY PLAN |
| 38 | 12-C-101 | SITE - SOUTH OPERATIONS AREA; PIPING PLAN |
| 39 | 12-C-102 | SITE - NORTH OPERATIONS AREA; PIPING PLAN |
| 40 | 12-C-103 | SITE - SOUTH PROCESS AREA; PIPING PLAN |
| 41 | 12-C-104 | SITE - NORTH PROCESS AREA; PIPING PLAN |
| 42 | 12-C-301 | SITE - OVERALL; PIPING SECTIONS AND DETAILS 1 |
| 43 | 12-C-302 | SITE - OVERALL; PIPING SECTIONS AND DETAILS 2 |
| 44 | 12-C-303 | SITE - OVERALL; PIPING SECTIONS AND DETAILS 3 |
| 45 | 12-C-501 | SITE - OVERALL; PIPING DETAILS 1 |
| 46 | 12-C-502 | SITE - OVERALL; PIPING DETAILS 2 |
| 47 | 12-C-503 | SITE - OVERALL; PIPING DETAILS 3 |
| 48 | 13-C-101 | SITE - WASH RACK; PLAN, SECTION, AND DETAILS |
| 49 | 14-C-101 | SITE - WRF PARKING CANOPY; PLAN, SECTION, AND DETAILS |
| 50 | 15-C-101 | SITE - WATER AND COLLECTION VEHICLES EQUIPMENT STORAGE; PLAN, SECTIONS, AND DETAILS |
| 51 | 16-C-101 | SITE - WATER AND COLLECTION SUPPLIES STORAGE; PLAN, SECTIONS, AND DETAILS |
| 52 | 17-C-101 | SITE - OUTDOOR STORAGE AISLES; PLAN, SECTIONS, AND DETAILS |
| 53 | 18-C-101 | SITE - PLANT SEWER LIFT STATION; PLAN, SECTIONS, AND DETAILS |
| 54 | 19-C-101 | SITE - MISCELLANEOUS YARD STRUCTURES; PLANS, SECTION, AND DETAILS 1 |
| 55 | 19-C-102 | SITE - MISCELLANEOUS YARD STRUCTURES; PLANS, SECTION, AND DETAILS 2 |
| 56 | 19-C-401 | SITE - ELECTRICAL AREA; ENLARGED PLAN |

## LANDSCAPE

| SHEET NO. | DRAWING NO. | DESCRIPTION |
|---|---|---|
| 57 | 10-L-001 | SITE - OVERALL; LANDSCAPING COVER SHEET |
| 58 | 10-L-101 | SITE - SOUTH OPERATIONS AREA; LANDSCAPING PLAN |
| 59 | 10-L-102 | SITE - NORTH OPERATIONS AREA; LANDSCAPING PLAN |
| 60 | 10-L-103 | SITE - SOUTH PROCESS AREA; LANDSCAPING PLAN |
| 61 | 10-L-104 | SITE - NORTH PROCESS AREA; LANDSCAPING PLAN |
| 62 | 10-L-501 | SITE - OVERALL; LANDSCAPING DETAILS |
| 63 | 11-L-111 | SITE - SOUTH OPERATIONS AREA; IRRIGATION PLAN |
| 64 | 11-L-112 | SITE - NORTH OPERATIONS AREA; IRRIGATION PLAN |
| 65 | 11-L-113 | SITE - SOUTH PROCESS AREA; IRRIGATION PLAN |
| 66 | 11-L-114 | SITE - NORTH PROCESS AREA; IRRIGATION PLAN |
| 67 | 11-L-511 | SITE - OVERALL; IRRIGATION DETAILS |
| 68 | 11-L-512 | SITE - OVERALL; IRRIGATION DETAILS |

## CIVIL MECHANICAL

| SHEET NO. | DRAWING NO. | DESCRIPTION |
|---|---|---|
| 69 | 00-M-501 | GENERAL; CIVIL MECHANICAL COMMON DETAILS 1 |
| 70 | 00-M-502 | GENERAL; CIVIL MECHANICAL COMMON DETAILS 2 |
| 71 | 00-M-503 | GENERAL; CIVIL MECHANICAL COMMON DETAILS 3 |
| 72 | 00-M-504 | GENERAL; CIVIL MECHANICAL COMMON DETAILS 4 |
| 73 | 00-M-505 | GENERAL; CIVIL MECHANICAL COMMON DETAILS 5 |
| 74 | 20-M-001 | HEADWORKS AREA - OVERALL; 3D VIEWS |
| 75 | 20-M-101 | HEADWORKS AREA - OVERALL; OPERATING LEVEL PLAN |
| 76 | 20-M-301 | HEADWORKS AREA - OVERALL; SECTIONS |
| 77 | 21-M-101 | HEADWORKS AREA - HEADWORKS; PLAN |
| 78 | 21-M-301 | HEADWORKS AREA - HEADWORKS; SECTIONS AND DETAILS 1 |
| 79 | 21-M-302 | HEADWORKS AREA - HEADWORKS; SECTIONS AND DETAILS 2 |
| 80 | 22-M-101 | HEADWORKS AREA - FINE SCREENS; PLAN |
| 81 | 22-M-301 | HEADWORKS AREA - FINE SCREENS; SECTIONS AND DETAILS 1 |
| 82 | 23-M-101 | HEADWORKS AREA - ODOR CONTROL; PLAN, SECTIONS, AND DETAILS |
| 83 | 24-M-101 | HEADWORKS AREA - VACTOR WASHDOWN AREA; 3D VIEWS |
| 84 | 24-M-301 | HEADWORKS AREA - VACTOR WASHDOWN AREA; PLAN, SECTIONS AND DETAILS |
| 85 | 30-M-001 | TREATMENT AREA - OVERALL; 3D VIEWS |
| 86 | 30-M-101 | TREATMENT AREA - OVERALL; OPERATING LEVEL PLAN |
| 87 | 30-M-301 | TREATMENT AREA - OVERALL; SECTIONS AND DETAILS |
| 88 | 31-M-101 | TREATMENT AREA - BNR BASINS; OPERATING LEVEL PLAN |
| 89 | 31-M-102 | TREATMENT AREA - BNR BASINS; LOWER LEVEL PLAN |
| 90 | 31-M-301 | TREATMENT AREA - BNR BASINS; SECTIONS AND DETAILS 1 |
| 91 | 31-M-302 | TREATMENT AREA - BNR BASINS; SECTIONS AND DETAILS 2 |
| 92 | 32-M-101 | TREATMENT AREA - MBR SYSTEM; OPERATING LEVEL PLAN |
| 93 | 32-M-301 | TREATMENT AREA - MBR SYSTEM; SECTIONS |
| 94 | 32-M-302 | TREATMENT AREA - MBR SYSTEM; SECTIONS 2 |
| 95 | 33-M-101 | TREATMENT AREA - RO FEED TANKS; PLAN, SECTIONS, AND DETAILS |
| 96 | 34-M-101 | TREATMENT AREA - ONSITE RECYCLE PUMPS; PLAN, SECTIONS, AND DETAILS |
| 97 | 50-M-001 | RO/UV BUILDING - OVERALL; 3D VIEWS |
| 98 | 50-M-101 | RO/UV BUILDING - OVERALL; OPERATING LEVEL PLAN |
| 99 | 50-M-301 | RO/UV BUILDING - OVERALL; SECTIONS |
| 100 | 51-M-101 | RO/UV BUILDING - RO SYSTEM; MEMBRANE RACKS PLAN |
| 101 | 51-M-102 | RO/UV BUILDING - RO SYSTEM; CIP & FLUSH SYSTEMS PLAN |
| 102 | 51-M-301 | RO/UV BUILDING - RO SYSTEM; SECTIONS AND DETAILS 1 |
| 103 | 51-M-302 | RO/UV BUILDING - RO SYSTEM; SECTIONS AND DETAILS 2 |
| 104 | 51-M-303 | RO/UV BUILDING - RO SYSTEM; SECTIONS AND DETAILS 3 |
| 105 | 52-M-101 | RO/UV BUILDING - UV SYSTEM; REACTOR SYSTEM PLAN |
| 106 | 52-M-301 | RO/UV BUILDING - UV SYSTEM; SECTIONS AND DETAILS 1 |
| 107 | 52-M-302 | RO/UV BUILDING - UV SYSTEM; SECTIONS AND DETAILS 2 |
| 108 | 60-M-001 | PRODUCT WATER AREA - OVERALL; 3D VIEWS |
| 109 | 60-M-101 | PRODUCT WATER AREA - OVERALL; OPERATING LEVEL PLAN |
| 110 | 61-M-101 | PRODUCT WATER AREA - CALCITE CONTACTOR; PLAN |
| 111 | 61-M-301 | PRODUCT WATER AREA - CALCITE CONTACTOR; SECTIONS AND DETAILS |
| 112 | 62-M-101 | PRODUCT WATER AREA - PRODUCT WATER STORAGE TANK; PLAN, SECTIONS, AND DETAILS |
| 113 | 63-M-101 | PRODUCT WATER AREA - IPR PRODUCT WATER PUMP STATION; PLAN |
| 114 | 63-M-301 | PRODUCT WATER AREA - IPR PRODUCT WATER PUMP STATION; SECTIONS & DETAILS 1 |
| 115 | 64-M-101 | PRODUCT WATER AREA - OUTFALL PUMP STATION; PLAN |
| 116 | 64-M-301 | PRODUCT WATER AREA - OUTFALL PUMP STATION; SECTIONS & DETAILS 1 |
| 117 | 65-M-101 | PRODUCT WATER AREA - DISINFECTION PIPELINE CONTACTOR; PLAN, SECTIONS, AND DETAILS |
| 118 | 65-M-102 | PRODUCT WATER AREA - DECHLORINATION FACILITY; PLAN, SECTIONS, AND DETAILS |
| 119 | 70-M-001 | RESIDUALS AREA - OVERALL; 3D VIEWS |
| 120 | 71-M-101 | RESIDUALS AREA - SLUDGE HOLDING AND SAFE SETTLE TANKS; OPERATING LEVEL PLAN |
| 121 | 71-M-102 | RESIDUALS AREA - SLUDGE HOLDING AND SAFE SETTLE TANKS; LOWER LEVEL PLAN |
| 122 | 71-M-301 | RESIDUALS AREA - SLUDGE HOLDING AND SAFE SETTLE TANKS; SECTIONS & DETAILS 1 |
| 123 | 71-M-302 | RESIDUALS AREA - SLUDGE HOLDING AND SAFE SETTLE TANKS; SECTIONS & DETAILS 2 |
| 124 | 72-M-101 | RESIDUALS AREA - DEWATERING FACILITY; PLAN |
| 125 | 72-M-301 | RESIDUALS AREA - DEWATERING FACILITY; SECTIONS & DETAILS 1 |
| 126 | 72-M-302 | RESIDUALS AREA - DEWATERING FACILITY; SECTIONS & DETAILS 2 |
| 127 | 73-M-101 | RESIDUALS AREA - SAFE FILTER SYSTEM; PLAN, SECTIONS, & DETAILS |
| 128 | 90-M-001 | CHEMICAL FACILITY - OVERALL; 3D VIEWS |
| 129 | 90-M-101 | CHEMICAL FACILITY - OVERALL; PLAN |
| 130 | 90-M-301 | CHEMICAL FACILITY - OVERALL; SECTIONS AND DETAILS 1 |
| 131 | 90-M-302 | CHEMICAL FACILITY - OVEARLL; SECTIONS AND DETAILS 2 |

## PROCESS AND INSTRUMENTATION

| SHEET NO. | DRAWING NO. | DESCRIPTION |
|---|---|---|
| 132 | 00-I-001 | P&ID - LEGEND AND ABBREVIATIONS - SHEET 1 |
| 133 | 00-I-002 | P&ID - LEGEND AND ABBREVIATIONS - SHEET 2 |
| 134 | 00-I-003 | P&ID - LEGEND AND ABBREVIATIONS - SHEET 3 |
| 135 | 00-I-701 | NETWORK OVERALL DIAGRAM |
| 136 | 00-I-702 | WIRELESS NETWORK DIAGRAM |
| 137 | 00-I-703 | OFFICE NETWORK AND TELEPHONE SYSTEM |
| 138 | 00-I-704 | SECURITY DIAGRAM |
| 139 | 00-I-501 | INSTALLATION DETAILS 1 |
| 140 | 00-I-502 | INSTALLATION DETAILS 2 |
| 141 | 00-I-503 | INSTALLATION DETAILS 3 |
| 142 | 00-I-504 | INSTALLATION DETAILS 4 |
| 143 | 00-I-505 | INSTALLATION DETAILS 5 |
| 144 | 00-I-506 | INSTALLATION DETAILS 6 |
| 145 | 21-I-001 | HEADWORKS AREA - HEADWORKS; TRAIN 1 |
| 146 | 21-I-002 | HEADWORKS AREA - HEADWORKS; TRAIN 2 |
| 147 | 22-I-001 | HEADWORKS AREA - FINE SCREENS; SAFE DIVERSION BOX & FINE SCREENS |
| 148 | 23-I-001 | HEADWORKS AREA - ODOR CONTROL; ODOR CONTROL SYSTEM |
| 149 | 24-I-001 | HEADWORKS AREA - VACTOR WASHDOWN AREA; VACTOR WASHDOWN SYSTEM |
| 150 | 31-I-001 | TREATMENT AREA - BNR BASINS; BASIN 1 & RAS DEOX |
| 151 | 31-I-002 | TREATMENT AREA - BNR BASINS; BASIN 2 |
| 152 | 31-I-003 | TREATMENT AREA - BNR BASINS; WAS SYSTEM |
| 153 | 31-I-004 | TREATMENT AREA - BNR BASINS; PROCESS AIR BLOWERS |
| 154 | 32-I-001 | TREATMENT AREA - MBR SYSTEM; MEMBRANE BASIN 1 |
| 155 | 32-I-002 | TREATMENT AREA - MBR SYSTEM; MEMBRANE BASIN 2 |
| 156 | 32-I-003 | TREATMENT AREA - MBR SYSTEM; FILTRATE PUMP, BASIN 1 |
| 157 | 32-I-004 | TREATMENT AREA - MBR SYSTEM; FILTRATE PUMP, BASIN 2 |
| 158 | 32-I-005 | TREATMENT AREA - MBR SYSTEM; FILTRATE MANIFOLD |
| 159 | 32-I-006 | TREATMENT AREA - MBR SYSTEM; MBR SCOUR AIR BLOWERS |
| 160 | 32-I-007 | TREATMENT AREA - MBR SYSTEM; TANK DRAIN PUMP |
| 161 | 33-I-001 | TREATMENT AREA - RO FEED TANKS; RO FEED TANKS |
| 162 | 34-I-001 | TREATMENT AREA - RECYCLED WATER PUMP STATION; RECYCLED WATER PUMPS |
| 163 | 51-I-001 | RO/UV BUILDING - RO SYSTEM; RO FEED CONDITIONING SYSTEM |
| 164 | 51-I-002 | RO/UV BUILDING - RO SYSTEM; RO CARTRIDGE FILTERS |
| 165 | 51-I-003 | RO/UV BUILDING - RO SYSTEM; RO UNIT 1 |
| 166 | 51-I-004 | RO/UV BUILDING - RO SYSTEM; RO UNIT 2 |
| 167 | 51-I-005 | RO/UV BUILDING - RO SYSTEM; RO UNIT 3 |
| 168 | 51-I-006 | RO/UV BUILDING - RO SYSTEM; RO PERMEATE/CONCENTRATE, UNIT 1 |
| 169 | 51-I-007 | RO/UV BUILDING - RO SYSTEM; RO PERMEATE/CONCENTRATE, UNIT 2 |
| 170 | 51-I-008 | RO/UV BUILDING - RO SYSTEM; RO PERMEATE/CONCENTRATE, UNIT 3 |
| 171 | 51-I-009 | RO/UV BUILDING - RO SYSTEM; RO CIP TANKS |
| 172 | 51-I-010 | RO/UV BUILDING - RO SYSTEM; RO CIP PUMPS |
| 173 | 51-I-011 | RO/UV BUILDING - RO SYSTEM; RO FLUSH SYSTEM |
| 174 | 52-I-001 | RO/UV BUILDING - UV SYSTEM; UV/AOP SYSTEM |
| 175 | 61-I-001 | PRODUCT WATER AREA - CALCITE CONTACTOR; CALCITE REMINERALIZATION SYSTEM |
| 176 | 62-I-001 | PRODUCT WATER AREA - IPR PRODUCT WATER STORAGE TANK; IPR PRODUCT WATER STORAGE TANK |
| 177 | 63-I-001 | PRODUCT WATER AREA - IPR PRODUCT WATER PUMP STATION; IPR PRODUCT WATER PUMPS |
| 178 | 64-I-001 | PRODUCT WATER AREA - OUTFALL PUMP STATION; OUTFALL TANK & PUMPS |
| 179 | 65-I-001 | PRODUCT WATER AREA - DISINFECTION SYSTEM; OUTFALL DISINFECTION SYSTEM |
| 180 | 71-I-001 | RESIDUALS AREA - SLUDGE & SAFE SETTLING TANKS; SLUDGE HOLDING TANKS |
| 181 | 71-I-002 | RESIDUALS AREA - SLUDGE & SAFE SETTLING TANKS; SAFE SETTLE TANK |
| 182 | 71-I-003 | RESIDUALS AREA - SLUDGE & SAFE SETTLING TANKS; SLUDGE HOLDING TANK BLOWERS |
| 183 | 72-I-001 | RESIDUALS AREA - DEWATERING SYSTEM; SLUDGE FEED PUMPS |
| 184 | 72-I-002 | RESIDUALS AREA - DEWATERING SYSTEM; BELT FILTER PRESS |
| 185 | 73-I-001 | RESIDUALS AREA - SAFE FILTER SYSTEM; SAFE SYSTEM |
| 186 | 81-I-001 | MISCELLANEOUS - GENERATOR; GENERATOR SYSTEM |
| 187 | 90-I-001 | CHEMICALS - CHEMICAL FACILITY; SODIUM HYPOCHLORITE STORAGE & FEED 1 |
| 188 | 90-I-002 | CHEMICALS - CHEMICAL FACILITY; SODIUM HYPOCHLORITE STORAGE & FEED 2 |
| 189 | 90-I-003 | CHEMICALS - CHEMICAL FACILITY; SODIUM HYDROXIDE STORAGE & FEED |
| 190 | 90-I-004 | CHEMICALS - CHEMICAL FACILITY; SODIUM BISULFITE STORAGE & FEED |
| 191 | 90-I-005 | CHEMICALS - CHEMICAL FACILITY; ANTISCALANT STORAGE & FEED |
| 192 | 90-I-006 | CHEMICALS - CHEMICAL FACILITY; CITRIC ACID STORAGE & FEED |
| 193 | 90-I-007 | CHEMICALS - CHEMICAL FACILITY; SULFURIC ACID STORAGE & FEED |
| 194 | 90-I-008 | CHEMICALS - DEWATERING AREA; THICKENING POLYMER STORAGE & FEED |
| 195 | 95-I-001 | OPERATIONS & CONTROL BUILDING - SANITARY SYSTEM; SANITARY LIFT STATION |

# COASTAL DEVELOPMENT PERMIT PLANS

| DATE | REVISIONS AND RECORD OF USE | NO. | BY | CHK | APP |
|---|---|---|---|---|---|
| 7/30/2019 | 60% SUBMITTAL | B | KEZ | RT | EVB |
| 3/5/2019 | 30% SUBMITTAL | A | KEZ | RWF | EVB |

BLACK & VEATCH

JOINT VENTURE

FILANC

BLACK & VEATCH

CITY OF MORRO BAY
MORRO BAY WATER
RECLAMATION FACILITY (WRF)

GENERAL
SHEET LIST 1

DESIGNED: EVB, KEZ
DETAILED: MAK
CHECKED:
APPROVED:
DATE:

0 1/2 1
IF THIS BAR DOES NOT MEASURE 1" THEN DRAWING IS NOT TO FULL SCALE

PROJECT NO.
400530

00-G-002
SHEET
OF

D400530
FD81203_PW

## STRUCTURAL

| SHEET NO. | DRAWING NO. | DESCRIPTION |
|---|---|---|
| 196 | 00-S-001 | STRUCTURAL GENERAL NOTES 1 |
| 197 | 00-S-002 | STRUCTURAL GENERAL NOTES 2 |
| 198 | 00-S-003 | SPECIAL INSPECTIONS & STRUCTURAL OBSERVATIONS |
| 199 | 00-S-101 | STRUCTURAL DETAILS 1 |
| 200 | 00-S-102 | STRUCTURAL DETAILS 2 |
| 201 | 00-S-103 | STRUCTURAL DETAILS 3 |
| 202 | 00-S-104 | STRUCTURAL DETAILS 4 |
| 203 | 00-S-105 | STRUCTURAL DETAILS 5 |
| 204 | 00-S-106 | STRUCTURAL DETAILS 6 |
| 206 | 10-S-001 | CORPORATION YARD AREA 3D VIEWS 1 |
| 207 | 10-S-002 | CORPORATION YARD AREA 3D VIEWS 2 |
| 208 | 10-S-003 | CORPORATION YARD AREA 3D VIEWS 3 |
| 209 | 13-S-101 | WASH RACK; PLAN |
| 210 | 13-S-301 | WASH RACK; SECTIONS & DETAILS |
| 211 | 14-S-101 | WRF PARKING CANOPY; PLANS |
| 212 | 14-S-301 | WRF PARKING CANOPY; SECTIONS & DETAILS |
| 213 | 16-S-101 | WATER AND COLLECTION SUPPLIES STORAGE SHED; PLAN |
| 214 | 16-S-301 | WATER AND COLLECTION SUPPLIES STORAGE SHED; SECTIONS & DETAILS |
| 215 | 17-S-101 | OUTDOOR STORAGE AREA; PLAN |
| 216 | 17-S-301 | OUTDOOR STORAGE AREA; SECTIONS & DETAILS |
| 217 | 20-S-001 | HEADWORKS AREA - OVERALL; 3D VIEWS |
| 218 | 20-S-101 | HEADWORKS AREA - OVERALL; PLAN |
| 219 | 20-S-301 | HEADWORKS AREA - OVERALL; SECTIONS & DETAILS 1 |
| 220 | 20-S-302 | HEADWORKS AREA - OVERALL; SECTIONS & DETAILS 2 |
| 221 | 24-S-101 | HEADWORKS AREA - VACTOR WASHDOWN; PLAN |
| 222 | 24-S-301 | HEADWORKS AREA - VACTOR WASHDOWN; SECTIONS & DETAILS |
| 223 | 30-S-001 | TREATMENT AREA - OVERALL; 3D VIEWS |
| 224 | 30-S-101 | TREATMENT AREA - OVERALL; OPERATING LEVEL PLAN |
| 225 | 30-S-102 | TREATMENT AREA - OVERALL; LOWER PLAN |
| 226 | 30-S-301 | TREATMENT AREA - OVERALL; SECTIONS & DETAILS 1 |
| 227 | 30-S-302 | TREATMENT AREA - OVERALL; SECTIONS & DETAILS 2 |
| 228 | 30-S-303 | TREATMENT AREA - OVERALL; SECTIONS & DETAILS 3 |
| 229 | 30-S-304 | TREATMENT AREA - OVERALL; SECTIONS & DETAILS 4 |
| 231 | 50-S-001 | RO/UV BUILDING - OVERALL; 3D VIEWS |
| 232 | 50-S-101 | RO/UV BUILDING - OVERALL; LOWER PLAN |
| 233 | 50-S-301 | RO/UV BUILDING - OVERALL; SECTIONS & DETAILS 1 |
| 234 | 50-S-302 | RO/UV BUILDING - OVERALL; SECTIONS & DETAILS 2 |
| 235 | 60-S-001 | PRODUCT WATER AREA - OVERALL; 3D VIEWS 1 |
| 236 | 60-S-002 | PRODUCT WATER AREA - OVERALL; 3D VIEWS 2 |
| 237 | 61-S-101 | PRODUCT WATER AREA - CALCITE CONTACTOR; PLAN |
| 238 | 61-S-301 | PRODUCT WATER AREA - CALCITE CONTACTOR; SECTIONS & DETAILS |
| 239 | 62-S-101 | PRODUCT WATER AREA - IPR PRODUCT WATER STORAGE TANK; PLAN |
| 240 | 62-S-301 | PRODUCT WATER AREA - IPR PRODUCT WATER STORAGE TANK; SECTIONS & DETAILS |
| 241 | 63-S-101 | PRODUCT WATER AREA - IPR PRODUCT WATER PUMP STATION; PLAN |
| 242 | 63-S-301 | PRODUCT WATER AREA - IPR PRODUCT WATER PUMP STATION; SECTIONS & DETAILS |
| 243 | 64-S-301 | PRODUCT WATER AREA - OUTFALL PUMP STATION; PLAN |
| 244 | 64-S-302 | PRODUCT WATER AREA - OUTFALL PUMP STATION; SECTIONS & DETAILS |
| 245 | 65-S-101 | PRODUCT WATER - DISINFECTION DISINFECTION SYSTEM; PLAN |
| 246 | 65-S-301 | PRODUCT WATER - DISINFECTION DISINFECTION SYSTEM; SECTIONS & DETAILS |
| 247 | 70-S-001 | RESIDUALS AREA - OVERALL; 3D VIEWS |
| 248 | 71-S-101 | RESIDUALS AREA - SLUDGE HOLDING TANKS & SAFE SETTLE TANK; PLAN |
| 249 | 71-S-301 | RESIDUALS AREA - SLUDGE HOLDING TANKS & SAFE SETTLE TANK; SECTIONS & DETAILS 1 |
| 250 | 71-S-302 | RESIDUALS AREA - SLUDGE HOLDING TANKS & SAFE SETTLE TANK; SECTIONS & DETAILS 2 |
| 252 | 72-S-101 | RESIDUALS AREA - DEWATERING FACILITY; PLAN |
| 253 | 72-S-301 | RESIDUALS AREA - DEWATERING FACILITY; SECTIONS & DETAILS 1 |
| 254 | 72-S-302 | RESIDUALS AREA - DEWATERING FACILITY; SECTIONS & DETAILS 2 |
| 256 | 73-S-101 | RESIDUALS AREA - SAFE FILTER SYSTEM; PLAN |
| 257 | 73-S-301 | RESIDUALS AREA - SAFE FILTER SYSTEM; SECTIONS & DETAILS |
| 258 | 80-S-001 | ELECTRICAL BUILDING - OVERALL; 3D VIEWS |
| 259 | 80-S-101 | ELECTRICAL BUILDING - OVERALL; PLAN |
| 260 | 80-S-301 | ELECTRICAL BUILDING - OVERALL; SECTIONS & DETAILS 1 |
| 261 | 80-S-302 | ELECTRICAL BUILDING - OVERALL; SECTIONS & DETAILS 2 |
| 262 | 81-S-101 | EMERGENCY POWER FACILITY - OVERALL; PLAN |
| 263 | 81-S-301 | EMERGENCY POWER FACILITY - OVERALL; SECTIONS & DETAILS 1 |
| 264 | 81-S-302 | EMERGENCY POWER FACILITY - OVERALL; SECTIONS & DETAILS 2 |
| 265 | 90-S-001 | CHEMICALS - CHEMICAL FACILITY; 3D VIEWS |
| 266 | 90-S-101 | CHEMICALS - CHEMICAL FACILITY; PLAN |
| 267 | 90-S-301 | CHEMICALS - CHEMICAL FACILITY; SECTIONS & DETAILS 1 |
| 268 | 90-S-302 | CHEMICALS - CHEMICAL FACILITY; SECTIONS & DETAILS 2 |
| 269 | 90-S-303 | CHEMICALS - CHEMICAL FACILITY; SECTIONS & DETAILS 3 |
| 270 | 95-S-001 | OPERATIONS BUILDING; 3D VIEWS |
| 271 | 95-S-101 | OPERATIONS BUILDING; PLAN |
| 272 | 95-S-301 | OPERATIONS BUILDING; SECTIONS & DETAILS 1 |
| 273 | 95-S-302 | OPERATIONS BUILDING; SECTIONS & DETAILS 2 |
| 274 | 95-S-303 | OPERATIONS BUILDING; SECTIONS & DETAILS 3 |
| 275 | 95-S-304 | OPERATIONS BUILDING; SECTIONS & DETAILS 4 |
| 276 | 96-S-001 | MAINTENANCE BUILDING; 3D VIEWS |
| 277 | 96-S-101 | MAINTENANCE BUILDING; PLAN |
| 278 | 96-S-301 | MAINTENANCE BUILDING; SECTIONS & DETAILS 1 |
| 279 | 96-S-302 | MAINTENANCE BUILDING; SECTIONS & DETAILS 2 |
| 280 | 96-S-303 | MAINTENANCE BUILDING; SECTIONS & DETAILS 3 |
| 281 | 96-S-304 | MAINTENANCE BUILDING; SECTIONS & DETAILS 4 |

## ARCHITECTURAL

| SHEET NO. | DRAWING NO. | DESCRIPTION |
|---|---|---|
| 282 | 00-A-001 | ARCHITECTURAL GENERAL NOTES 1 |
| 283 | 00-A-001 | ARCHITECTURAL DETAILS 1 |
| 284 | 00-A-002 | ARCHITECTURAL DETAILS 2 |
| 285 | 00-A-003 | ARCHITECTURAL DETAILS 3 |
| 286 | 00-A-004 | ARCHITECTURAL DETAILS 4 |
| 287 | 00-A-005 | ARCHITECTURAL DETAILS 5 |
| 288 | 00-A-006 | ARCHITECTURAL DETAILS 6 |
| 289 | 00-A-007 | ARCHITECTURAL DETAILS 7 |
| 290 | 00-A-008 | ARCHITECTURAL DETAILS 8 |
| 291 | 00-A-009 | ARCHITECTURAL DETAILS 9 |
| 292 | 00-A-010 | ARCHITECTURAL DETAILS 10 |
| 293 | 00-A-011 | ARCHITECTURAL DETAILS 11 |
| 294 | 00-A-012 | ARCHITECTURAL DETAILS 12 |
| 295 | 00-A-013 | ARCHITECTURAL DETAILS 13 |
| 296 | 10-A-001 | CORPORATION YARD AREA; 3D VIEW 1 |
| 297 | 10-A-002 | CORPORATION YARD AREA; 3D VIEW 2 |
| 298 | 10-A-003 | CORPORATION YARD AREA; 3D VIEW 3 |
| 299 | 14-A-101 | WRF PARKING CANOPY; PLAN |
| 300 | 14-A-301 | WRF PARKING CANOPY; SECTIONS & DETAILS |
| 301 | 16-A-001 | WATER AND COLLECTION SUPPLIES STORAGE SHED; PERSPECTIVES |
| 302 | 16-A-002 | WATER AND COLLECTION SUPPLIES STORAGE SHED; ENERGY CODE COMPLIANCE 1 |
| 303 | 16-A-003 | WATER AND COLLECTION SUPPLIES STORAGE SHED; ENERGY CODE COMPLIANCE 2 |
| 304 | 16-A-101 | WATER AND COLLECTION SUPPLIES STORAGE SHED; LIFE SAFETY PLAN |
| 305 | 16-A-102 | WATER AND COLLECTION SUPPLIES STORAGE SHED; OPERATING FLOOR PLAN |
| 306 | 16-A-103 | WATER AND COLLECTION SUPPLIES STORAGE SHED; ROOF PLAN |
| 307 | 16-A-201 | WATER AND COLLECTION SUPPLIES STORAGE SHED; BUILDING ELEVATIONS |
| 308 | 16-A-301 | WATER AND COLLECTION SUPPLIES STORAGE SHED; SECTIONS & DETAILS |
| 309 | 17-A-101 | PERMANENT OPEN STORAGE; PLANS |
| 310 | 17-A-301 | PERMANENT OPEN STORAGE; SECTIONS & DETAILS |
| 311 | 50-A-001 | RO/UV BUILDING; PERSPECTIVES |
| 312 | 50-A-002 | RO/UV BUILDING; ENERGY CODE COMPLIANCE 1 |
| 313 | 50-A-003 | RO/UV BUILDING; ENERGY CODE COMPLIANCE 2 |
| 314 | 50-A-101 | RO/UV BUILDING; LIFE SAFETY PLAN |
| 315 | 50-A-102 | RO/UV BUILDING; OPERATING FLOOR PLAN |
| 316 | 50-A-103 | RO/UV BUILDING; ROOF PLAN |
| 317 | 50-A-201 | RO/UV BUILDING; BUILDING ELEVATIONS 1 |
| 318 | 50-A-202 | RO/UV BUILDING; BUILDING ELEVATIONS 2 |
| 319 | 50-A-301 | RO/UV BUILDING; WALL SECTIONS 1 |
| 320 | 50-A-302 | RO/UV BUILDING; WALL SECTIONS 2 |
| 321 | 50-A-303 | RO/UV BUILDING; WALL SECTIONS 3 |
| 322 | 50-A-601 | RO/UV BUILDING; SCHEDULES |
| 323 | 70-A-001 | RESIDUALS AREA; PERSPECTIVES |
| 324 | 72-A-101 | RESIDUALS AREA - DEWATERING FACILITY; OPERATING FLOOR PLAN |
| 325 | 72-A-102 | RESIDUALS AREA - DEWATERING FACILITY; ROOF PLAN |
| 326 | 72-A-201 | RESIDUALS AREA - DEWATERING FACILITY; BUILDING ELEVATIONS |
| 327 | 72-A-301 | RESIDUALS AREA - DEWATERING FACILITY; WALL SECTIONS |
| 328 | 80-A-001 | ELECTRICAL BUILDING; PERSPECTIVES |
| 329 | 80-A-002 | ELECTRICAL BUILDING; ENERGY CODE COMPLIANCE |
| 330 | 80-A-101 | ELECTRICAL BUILDING; LIFE SAFETY PLAN |
| 331 | 80-A-102 | ELECTRICAL BUILDING; OPERATING FLOOR PLAN |
| 332 | 80-A-103 | ELECTRICAL BUILDING; ROOF PLAN |
| 333 | 80-A-201 | ELECTRICAL BUILDING; BUILDING ELEVATIONS |
| 334 | 80-A-301 | ELECTRICAL BUILDING; BUILDING SECTIONS |
| 335 | 80-A-302 | ELECTRICAL BUILDING; WALL SECTIONS |
| 336 | 90-A-001 | CHEMICALS - CHEMICAL FACILITY; PERSPECTIVES |
| 337 | 90-A-101 | CHEMICALS - CHEMICAL FACILITY; OPERATING FLOOR PLAN |
| 338 | 90-A-102 | CHEMICALS - CHEMICAL FACILITY; ROOF PLAN |
| 339 | 90-A-201 | CHEMICALS - CHEMICAL FACILITY; BUILDING ELEVATIONS |
| 340 | 90-A-301 | CHEMICALS - CHEMICAL FACILITY; WALL SECTIONS |
| 341 | 95-A-001 | OPERATIONS BUILDING; PERSPECTIVES |
| 342 | 95-A-002 | OPERATIONS BUILDING; ENERGY CODE COMPLIANCE 1 |
| 343 | 95-A-003 | OPERATIONS BUILDING; ENERGY CODE COMPLIANCE 2 |
| 344 | 95-A-101 | OPERATIONS BUILDING; LIFE SAFETY PLAN |
| 345 | 95-A-102 | OPERATIONS BUILDING; OPERATING FLOOR PLAN |
| 346 | 95-A-103 | OPERATIONS BUILDING; ROOF PLAN |
| 347 | 95-A-104 | OPERATIONS BUILDING; REFLECTED CEILING PLAN |
| 348 | 95-A-201 | OPERATIONS BUILDING; BUILDING ELEVATIONS 1 |
| 349 | 95-A-202 | OPERATIONS BUILDING; BUILDING ELEVATIONS 2 |
| 350 | 95-A-301 | OPERATIONS BUILDING; WALL SECTIONS 1 |
| 351 | 95-A-302 | OPERATIONS BUILDING; WALL SECTIONS 2 |
| 352 | 95-A-303 | OPERATIONS BUILDING; WALL TYPES AND CONNECTION DETAILS |
| 353 | 95-A-401 | OPERATIONS BUILDING; ENLARGED OPERATING FLOOR PLAN - EAST |
| 354 | 95-A-402 | OPERATIONS BUILDING; ENLARGED OPERATING FLOOR PLAN - WEST |
| 355 | 95-A-403 | OPERATIONS BUILDING; ENLARGED RESTROOM PLANS |
| 356 | 95-A-404 | OPERATIONS BUILDING; RESTROOM AND LOCKER ROOM ELEVATIONS 1 |
| 357 | 95-A-405 | OPERATIONS BUILDING; RESTROOM AND LOCKER ROOM ELEVATIONS 2 |
| 358 | 95-A-406 | OPERATIONS BUILDING; ENLARGED CASEWORK PLANS AND ELEVATIONS 1 |
| 359 | 95-A-407 | OPERATIONS BUILDING; ENLARGED CASEWORK PLANS AND ELEVATIONS 2 |
| 360 | 95-A-408 | OPERATIONS BUILDING; ENLARGED CASEWORK PLANS AND ELEVATIONS 3 |
| 361 | 96-A-001 | MAINTENANCE BUILDING; PERSPECTIVES |
| 362 | 96-A-002 | MAINTENANCE BUILDING; ENERGY CODE COMPLIANCE 1 |
| 363 | 96-A-003 | MAINTENANCE BUILDING; ENERGY CODE COMPLIANCE 2 |
| 364 | 96-A-101 | MAINTENANCE BUILDING; LIFE SAFETY PLAN |
| 365 | 96-A-102 | MAINTENANCE BUILDING; OPERATING FLOOR PLAN |
| 366 | 96-A-103 | MAINTENANCE BUILDING; CLERESTORY PLANS |
| 367 | 96-A-104 | MAINTENANCE BUILDING; ROOF PLANS |
| 369 | 96-A-201 | MAINTENANCE BUILDING; ELEVATIONS 1 |
| 370 | 96-A-202 | MAINTENANCE BUILDING; ELEVATIONS 2 |
| 371 | 96-A-301 | MAINTENANCE BUILDING; WALL SECTIONS 1 |
| 372 | 96-A-302 | MAINTENANCE BUILDING; WALL SECTIONS 2 |
| 373 | 96-A-303 | MAINTENANCE BUILDING; WALL TYPES AND CONNECTION DETAILS |
| 374 | 96-A-401 | MAINTENANCE BUILDING; INTERMEDIATE FLOOR PLAN |
| 375 | 96-A-402 | MAINTENANCE BUILDING; ENLARGED INTERMEDIATE FLOOR PLAN |
| 376 | 96-A-601 | MAINTENANCE BUILDING; SCHEDULES |

## PLUMBING

| SHEET NO. | DRAWING NO. | DESCRIPTION |
|---|---|---|
| 377 | 00-P-001 | PLUMBING LEGEND, ABBREVIATIONS, AND GENERAL NOTES |
| 378 | 00-P-501 | PLUMBING DETAILS 1 |
| 379 | 00-P-502 | PLUMBING DETAILS 2 |
| 380 | 00-P-601 | PLUMBING SCHEDULES |
| 381 | 00-P-701 | PLUMBING SCHEMATICS 1 |
| 382 | 00-P-702 | PLUMBING SCHEMATICS 2 |
| 383 | 13-P-101 | WASH RACK; PLANS, SECTIONS & DETAILS |
| 384 | 16-P-101 | WATER VEHICLES EQUIPMENT STORAGE; PLANS, SECTIONS & DETAILS |
| 385 | 17-P-101 | PERMANENT OPEN STORAGE; PLANS, SECTIONS & DETAILS |
| 386 | 18-P-101 | PLANT DRAIN/SEWER PUMP STATION; PLANS, SECTIONS & DETAILS |
| 387 | 50-P-101 | RO/UV BUILDING; PLANS |
| 388 | 50-P-301 | RO/UV BUILDING; SECTIONS & DETAILS |
| 389 | 72-P-101 | RESIDUALS AREA - DEWATERING FACILITY; PLANS |
| 390 | 72-P-301 | RESIDUALS AREA - DEWATERING FACILITY; SECTIONS & DETAILS |
| 391 | 90-P-101 | CHEMICAL FACILITY; PLANS |
| 392 | 90-P-301 | CHEMICAL FACILITY; SECTIONS & DETAILS |
| 393 | 95-P-101 | OPERATIONS BUILDING; PLANS |
| 394 | 95-P-301 | OPERATIONS BUILDING; SECTIONS & DETAILS |
| 395 | 96-P-101 | MAINTENANCE BUILDING; PLANS |
| 396 | 96-P-301 | MAINTENANCE BUILDING; SECTIONS & DETAILS |

## HVAC

| SHEET NO. | DRAWING NO. | DESCRIPTION |
|---|---|---|
| 397 | 00-H-001 | HVAC LEGEND, ABBREVIATIONS, AND GENERAL NOTES |
| 398 | 00-H-002 | HVAC SCHEMATICS 1 |
| 399 | 00-H-003 | HVAC SCHEMATICS 2 |
| 400 | 00-H-004 | HVAC SCHEDULES |
| 401 | 00-H-501 | HVAC DETAILS 1 |
| 402 | 00-H-502 | HVAC DETAILS 2 |
| 404 | 16-H-101 | WATER AND COLLECTION SUPPLIES STORAGE SHED; PLANS |
| 405 | 16-H-301 | WATER AND COLLECTION SUPPLIES STORAGE SHED; SECTIONS & DETAILS |
| 406 | 50-H-101 | RO/UV BUILDING; PLANS |
| 407 | 50-H-301 | RO/UV BUILDING; SECTIONS & DETAILS |
| 408 | 80-H-101 | ELECTRICAL BUILDING; PLANS |
| 409 | 80-H-301 | ELECTRICAL BUILDING; SECTIONS & DETAILS |
| 410 | 95-H-101 | OPERATIONS BUILDING; PLANS |
| 411 | 95-H-301 | OPERATIONS BUILDING; SECTIONS & DETAILS |
| 412 | 96-H-101 | MAINTENANCE BUILDING; PLANS |
| 413 | 96-H-301 | MAINTENANCE BUILDING; SECTIONS & DETAILS |

## FIRE PROTECTION

| SHEET NO. | DRAWING NO. | DESCRIPTION |
|---|---|---|
| 414 | 50-F-101 | RO/UV BUILDING - FIRE DETECTION; PLAN & DETAILS |
| 415 | 95-F-001 | OPERATIONS BUILDING - FIRE SUPPRESSION SYSTEM; SCHEMATIC |
| 416 | 95-F-101 | OPERATIONS BUILDING - FIRE SUPPRESSION SYSTEM; PLAN |
| 417 | 95-F-102 | OPERATIONS BUILDING - FIRE DETECTION; PLAN & DETAILS |
| 418 | 96-F-001 | MAINTENANCE BUILDING - FIRE SUPPRESSION SYSTEM; SCHEMATIC |
| 419 | 96-F-101 | MAINTENANCE BUILDING - FIRE SUPPRESSION SYSTEM; PLAN |
| 420 | 96-F-102 | MAINTENANCE BUILDING - FIRE DETECTION; PLAN & DETAILS |

## ELECTRICAL

| SHEET NO. | DRAWING NO. | DESCRIPTION |
|---|---|---|
| 421 | 00-E-001 | GENERAL; LEGENDS |
| 422 | 00-E-002 | GENERAL; ABBREVIATIONS AND GENERAL NOTES |
| 423 | 00-E-501 | GENERAL; INSTALLATION DETAILS SHEET 1 OF 3 |
| 424 | 00-E-502 | GENERAL; INSTALLATION DETAILS SHEET 2 OF 3 |
| 425 | 00-E-503 | GENERAL; INSTALLATION DETAILS SHEET 3 OF 3 |
| 426 | 00-E-504 | GENERAL; GROUNDING DETAILS |
| 427 | 10-E-100 | ELECTRICAL SITE - OVERALL POWER PLAN |
| 428 | 10-E-111 | ELECTRICAL SITE - OVERALL LIGHTING PLAN |
| 429 | 10-E-601 | OVERALL SITE DUCTBANK SCHEDULE SHEET 1 OF 2 |
| 430 | 10-E-602 | OVERALL SITE DUCTBANK SCHEDULE SHEET 2 OF 2 |
| 431 | 21-E-101 | HEADWORKS AREA POWER AND GROUNDING PLAN |
| 432 | 21-E-711 | HEADWORKS AREA PLC/RIO ONE-LINE DIAGRAM |
| 433 | 31-E-101 | TREATMENT AREA - BNR BASINS POWER AND GROUNDING PLAN |
| 434 | 31-E-711 | TREATMENT AREA PLC/RIO ONE-LINE SHEET 1 OF 2 |
| 435 | 31-E-712 | TREATMENT AREA PLC/RIO ONE-LINE SHEET 2 OF 2 |
| 436 | 31-E-713 | 32-MBR-PLC-0001 ONE-LINE DIAGRAM |
| 437 | 32-E-101 | TREATMENT AREA - MBR SYSTEM POWER AND GROUNDING PLAN |
| 438 | 33-E-101 | TREATMENT AREA - RO FEED TANKS POWER AND GROUNDING PLAN |
| 439 | 34-E-101 | TREATMENT AREA - RECYCLED WATER PUMPS POWER AND GROUNDING PLAN |
| 440 | 50-E-601 | RO/UV BUILDING POWER PANELS SCHEDULE |
| 441 | 50-E-701 | 50-ELEC-MCC-0001 ONE-LINE SHEET 1 OF 2 |
| 442 | 50-E-702 | 50-ELEC-MCC-0001 ONE-LINE SHEET 2 OF 2 |
| 443 | 50-E-711 | RO/UV BUILDING PLC/RIO ONE-LINE SHEET 1 OF 4 |
| 444 | 50-E-712 | RO/UV BUILDING PLC/RIO ONE-LINE SHEET 2 OF 4 |
| 445 | 50-E-721 | RO/UV BUILDING SCHEMATICS SHEET 1 OF 2 |
| 446 | 50-E-722 | RO/UV BUILDING SCHEMATICS SHEET 2 OF 2 |
| 447 | 51-E-101 | RO/UV BUILDING - RO SYSTEM POWER AND GROUNDING PLAN |
| 448 | 51-E-102 | RO/UV BUILDING - RO CIP & FLUSH SYSTEMS POWER AND GROUNDING PLAN |
| 449 | 51-E-103 | RO/UV BUILDING - ELECTRICAL ROOM POWER AND GROUNDING PLAN |
| 450 | 52-E-101 | RO/UV BUILDING - UV SYSTEM POWER AND GROUNDING PLAN |
| 451 | 61-E-101 | PRODUCT WATER AREA - CALCITE CONTACTOR AREA POWER AND GROUNDING PLAN |
| 452 | 62-E-101 | PRODUCT WATER AREA - IPR PRODUCT WATER STORAGE TANK POWER AND GROUNDING PLAN |
| 453 | 63-E-101 | PRODUCT WATER AREA -PRODUCT WATER STORAGE TANK POWER AND GROUNDING PLAN |
| 454 | 64-E-101 | PRODUCT WATER AREA - OUTFALL PUMPS STATION POWER AND GROUNDING PLAN |
| 455 | 71-E-101 | RESIDUALS AREA - SLUDGE HOLDING TANKS & SAFE SETTLE TANK AREA POWER AND GROUNDING PLAN |
| 456 | 72-E-101 | RESIDUALS AREA - DEWATERING FACILITY POWER AND GROUNDING PLAN |
| 457 | 72-E-701 | RESIDUALS AREA - PLC/RIO ONE-LINE |
| 458 | 73-E-101 | RESIDUALS AREA - SAFE FILTER POWER AND GROUNDING PLAN |
| 459 | 80-E-101 | ELECTRICAL BUILDING POWER AND GROUNDING PLAN |
| 460 | 80-E-601 | ELECTRICAL BUILDING POWER PANELS SCHEDULE |
| 461 | 80-E-701 | 80-ELEC-SWB-0001 ONE-LINE DIAGRAM |
| 462 | 80-E-702 | 80-ELEC-MCC-0001 ONE-LINE DIAGRAM |
| 463 | 80-E-703 | 80-ELEC-MCC-0002 ONE-LINE DIAGRAM SHEET 1 OF 2 |
| 464 | 80-E-704 | 80-ELEC-MCC-0002 ONE-LINE DIAGRAM SHEET 2 OF 2 |
| 465 | 80-E-711 | ELECTRICAL BUILDING PLC/RIO ONE-LINE DIAGRAM |
| 466 | 80-E-721 | ELECTRICAL BUILDING SCHEMATICS SHEET 1 OF 3 |
| 467 | 80-E-722 | ELECTRICAL BUILDING SCHEMATICS SHEET 2 OF 3 |
| 468 | 80-E-723 | ELECTRICAL BUILDING SCHEMATICS SHEET 3 OF 3 |
| 469 | 90-E-101 | CHEMICAL FACILITY POWER AND GROUNDING PLAN |
| 470 | 90-E-711 | CHEMICAL FACILITY PLC/RIO ONE-LINE |
| 472 | 95-E-111 | OPERATIONS & CONTROL BUILDING LIGHTING PLAN |
| 473 | 95-E-601 | OPERATIONS BUILDING POWER PANELS SCHEDULE |
| 474 | 96-E-101 | MAINTENANCE BUILDING POWER AND GROUNDING PLAN |
| 475 | 96-E-111 | MAINTENANCE BUILDING LIGHTING PLAN |
| 476 | 96-E-601 | MAINTENANCE BUILDING POWER AND LIGHTING PANELS SCHEDULE |

# COASTAL DEVELOPMENT PERMIT PLANS

| NO. | BY | CHK | APP |
|---|---|---|---|
| B | KEZ | RT | EVB |
| A | KEZ | RWF | EVB |

REVISIONS AND RECORD OF USE

| DATE | |
|---|---|
| 7/30/2019 | 60% SUBMITTAL |
| 3/5/2019 | 30% SUBMITTAL |

BLACK & VEATCH

JOINT VENTURE

FILANC

BLACK & VEATCH

CITY OF MORRO BAY
MORRO BAY WATER
RECLAMATION FACILITY (WRF)

GENERAL
SHEET LIST 2

DESIGNED: EVB, KEZ
DETAILED: MAK
CHECKED:
APPROVED:
DATE:

0 1/2 1
IF THIS BAR DOES NOT MEASURE 1" THEN DRAWING IS NOT TO FULL SCALE

PROJECT NO.
400530

00-G-003
SHEET
OF

D400530
FD81203_PW

| | |
|---|---|
| A | ACID, AMBER INDICATING LIGHT,AMP |
| AA | AIR-AERATION |
| AC | ALTERNATING CURRENT |
| AER | AERATION SYSTEM |
| AIR | PROCESS AIR |
| ALT | ALTERNATE, (IVE) |
| ALUM | ALUMINUM |
| AM | AMMETER |
| AMP | AMPERE |
| ANTI | ANTISCALANT |
| AS | AMMETER SWITCH |
| ATS | AUTOMATIC TRANSFER SWITCH |
| AUTO | AUTOMATIC |
| AWG | AMERICAN WIRE GAUGE |
| AWS | AERATED WAS |
| BLDG | BUILDING |
| BNR | BNR |
| C/L | CENTERLINE |
| CA | CITRIC ACID |
| CAKE | DEWATERED CAKE SLUDGE |
| CAL | CALCITE |
| CHANNEL | PROCESS CHANNEL |
| CIP | CAST IN PLACE |
| CIP | CAST IRON PIPE |
| CIPR | REVERSE OSMOSIS CIP RETURN |
| CIPS | REVERSE OSMOSIS CIP SUPPLY |
| CLR | CLEAR, (ANCE) |
| CMU | CONCRETE MASONRY UNIT |
| COMB | COMBINATION |
| CONC | CONCRETE |
| CONST | CONSTRUCTION |
| CONT | CONTINUOUS, CONTINUATION, CONTROL |
| CP | CONTROL PANEL |
| CS | CONTROL SWITCH, CONTROL STATION, CUP SINK |
| CSK | COUNTERSUNK, (INK) |
| CT | CERAMIC TILE, CYCLE TIMER |
| CT | CURRENT TRANSFORMER |
| CU | CUBIC |
| CU YD | CUBIC YARD |
| CW | COLD, WATER |
| D | DRAIN |
| DC | DIRECT CURRENT |
| DEPT | DEPARTMENT |
| DIA | DIAMETER |
| DIFF | DIFFUSER |
| DIM | DIMENSION |
| DIP | DUCTILE IRON PIPE |
| DIV | DIVISION |
| DMJ | DOUBLE MECHANICAL JOINT |
| DO | DISSOLVED OXYGEN |
| DR | DRAIN |
| DRN | DRAIN |
| DS | DOWNSPOUT |
| DV | DRAIN VALVE |
| DWG(S) | DRAWING(S) |
| DWL(S) | DOWEL(S) |
| DWT | DEWATERING |
| E | EAST, ELECTRICAL |
| EA | EACH |
| ECC | ECCENTRIC |
| EF | EACH FACE |
| EFF | EFFLUENT |
| EL | ELEVATION |
| ELEC | ELECTRIC, (AL) |
| ELEV | ELEVATION |
| EMER | EMERGENCY |
| EQ | EQUAL |
| EQUIP | EQUIPMENT |
| EW | EACH WAY |
| EXIST | EXISTING |
| EXP | EXPANSION, EXPOSED |
| EXP JT | EXPANSION JOINT |
| EXT | EXTENSION, EXTERIOR, EXTERNAL |
| F | FIRE PROTECTION WATER SYSTEM |
| FA | FOUL AIR |
| FBW | FILTER BACKWASH |
| FC | FLEXIBLE CONNECTION, FLOW CONTROL |
| FD | FLOOR DRAIN |
| FDN | FOUNDATION |
| FE | FIRE EXTINGUISHER |
| FEC | FIRE EXTINGUISHER CABINET |
| FF | REVERSE OSMOSIS FORWARD FLUSH |
| FH | FLAT HEAD, FIRE HYDRANT |
| FIG | FIGURE |
| FIW | FILTER INLET WASH |
| FL | FLOOR, FLOW LINE |
| FLEX | FLEXIBLE |
| FM | FORCE MAIN |
| FO | FUEL OIL |
| FOW | FILTERED OUTLET WATER |
| FPW | FIRE PROTECTION WATER |
| FRP | FIBERGLASS REINFORCED PLASTIC |
| FS | FAR SIDE, FLOOR SLEEVE, FLOAT SWITCH |
| FSCM | FILTER SCUM |
| FSW | FILTER SOLIDS WASTE |
| FT | FOOT |
| FTG | FOOTING |
| FUE | DIESEL FUEL |
| FURN | FURNISH, FURNISHED |
| FWD | FORWARD |
| G | GAS |
| GA | GAUGE |
| GAL | GALLON |
| GEN | GENERATOR FUEL |
| GEN | GENERAL, GENERATOR |
| GPM | GALLONS PER MINUTE |
| GRT | GRIT |
| GWB | GYPSUM WALLBOARD |
| GYP | GYPSUM |
| H | HIGH, HOUR, HYDROGEN |
| HDR | HEADER |
| HE | HEAT EXCHANGER |
| HEX | HEXAGONAL |
| HGT | HEIGHT |
| HH | HANDHOLE |
| HORIZ | HORIZONTAL |
| HP | HIGH POINT, HORSEPOWER |
| HR | HOUR, HANDRAIL |
| HS | HIGH STRENGTH |
| HSO4 | SULFURIC ACID |
| HV | HOSE VALVE |
| HVAC | HEATING,VENTILATING AND AIR CONDITIONING |
| HW | HOT WATER |
| I | INDICATOR |
| IA | INSTRUMENT AIR |
| IF | INSIDE FACE |
| IN | INCHES |
| INC | INCORPORATED |
| INV | INVERT |
| IPR | INDIRECT POTABLE REUSE WATER |
| JB | JUNCTION BOX |
| IPS | IRON PIPE SIZE |
| JT | JOINT |
| K | KIPS |
| KV | KILOVOLT |
| KVA | KILOVOLT AMPERE |
| KW | KILOWATT |
| KWH | KILOWATT HOUR |
| L | LOUVER |
| LAB | LABORATORY |
| LAT | LEAVING AIR TEMPERATURE |
| LAT | LATERAL |
| LB(S) | POUNDS |
| LG | LENGTH, LONG |
| LO | LOUVER OPENING |
| LS | LEVEL SWITCH |
| LT | LEFT, LAB TABLE |
| MA | MILLIAMPERE |
| MAX | MAXIMUM |
| MCC | MOTOR CONTROL CENTER |
| MECH | MECHANICAL |
| MEM | MEMBRANE |
| MFF | MICROFILTRATION FILTRATE |
| MFR(S) | MANUFACTURER(S) |
| MG | MILLION GALLONS |
| MGD | MILLION GALLONS PER DAY |
| MH | MANHOLE |
| MIN | MINIMUM, MINUTE |
| MISC | MISCELLANEOUS |
| MJ | MECHANICAL JOINT |
| ML | MIXED LIQUOR |
| MP | METERING PUMP |
| MS | MACHINE SCREW |
| MSL | MEAN SEA LEVEL |
| MTD | MOUNTED |
| MTL | MATERIAL |
| N | NORTH |
| N/A | NOT APPLICABLE |
| N.O. | NORMALLY OPEN |
| NACL | SODIUM HYPOCHLORITE |
| NAOH | SODIUM HYDROXIDE |
| NC | NORMALLY CLOSED |
| NEUT | NEUTRAL |
| NF | NEAR FACE |
| NHS | SODIUM BISULFATE |
| NO.(S) | NUMBER(S) |
| NOCL | SODIUM HYPOCHLORITE |
| NPW | NONPOTABLE WATER |
| NS | NEAR SIDE |
| NTS | NOT TO SCALE |
| OC | ON CENTER, ODOR CONTROL |
| OD | OUTSIDE DIAMETER |
| OF | OUTSIDE FACE, OVERFLOW |
| OH | OVERHEAD |
| OL | OVERLOAD |
| OPER | OPERATING |
| OZ | OUNCE |
| PC | POINT OF CURVE |
| PCC | POINT OF COMPOUND CURVATURE |
| PCR | REVERSE OSMOSIS PERMRATE |
| PD | PLAN DIMENSION, SUMP PUMP DISCHARGE |
| PE | PLAIN END |
| PG | PRESSURE GAUGE |
| PI | POINT OF INTERSECTION |
| PL | PLATE |
| PLYWD | PLYWOOD |
| POLF | POLYMER |
| POLY | POLYMER |
| POW | PLANT OUTFALL WATER |
| PP | POWER POLE |
| PR | PAIR |
| PROJ | PROJECTION |
| PRS | PRESSURE REDUCING STATION |
| PRV | POWER ROOF VENTILATOR |
| PRW | PLANT RECYCLED WATER |
| PS | PIPE SUPPORT |
| PSF | POUNDS PER SQUARE FOOT |
| PSI | POUNDS PER SQUARE INCH |
| PSW | PLANT SERVICE WATER |
| PT | POINT, POINT OF TANGENCY |
| PVC | POLYVINYL CHLORIDE, POINT ON VERTICAL CURVE |
| PVCP | POLYVINYL CHLORIDE PIPE |
| PVMT | PAVEMENT |
| PW | POTABLE WATER |
| R | RADIUS, RISER |
| R / W | RIGHT OF WAY |
| RAS | RETURN ACTIVATED SLUDGE |
| RCW | RECLAIMED WATER |
| RECIRC | RECIRCULATING |
| RED | REDUCER, REDUCING |
| REINF | REINFORCING |
| REQD | REQUIRED |
| REV | REVERSED |
| RM | ROOM |
| RO | REVERSE OSMOSIS, ROUGH OPENING |
| ROC | REVERSE OSMOSIS CONCENTRATE |
| ROF | REVERSE OSMOSIS FEED |
| ROP | REVERSE OSMOSIS PERMEATE |
| RPM | REVOLUTIONS PER MINUTE |
| RS | RAW SLUDGE, RAW SEWAGE, ROLLED STEEL |
| RT | RIGHT |
| S | SOUTH, SPEAKER |
| SA | SULFURIC ACID |
| SAN | SANITARY SEWER |
| SCM | SCUM |
| SCR | SCREENINGS |
| SEC | SECOND |
| SECT | SECTION |
| SH | SHEET |
| SIM | SIMILAR |
| SP | SUMP PUMP |
| SPEC(S) | SPECIFICATION(S) |
| SQ | SQUARE |
| SS | SANITARY SEWER, STAINLESS STEEL |
| ST | STORM DRAIN |
| STD | STANDARD |
| STL | STEEL |
| STR | STRUCTURAL |
| SV | SHUTOFF VALVE |
| SYS | SYSTEM |
| T | THERMOSTAT, TREAD, TOTALIZER |
| T | TRANSFORMER, TOP |
| T&B | TOP AND BOTTOM |
| TEMP | TEMPERATURE, TEMPORARY |
| THK | THICK (NESS) |
| TI | TOTALIZING INDICATOR, TEMPERATURE INDICATOR |
| TP | TWISTED PAIR COUPLE, TOWEL PIN |
| TS | TEMPERATURE SWITCH |
| TW | TREATED WATER, TEMPERED OR BLENDED WATER |
| TYP | TYPICAL |
| UH | UNIT HEATER |
| UNO | UNLESS NOTED OTHERWISE |
| UV | ULTRAVIOLET |
| UVE | ULTRAVIOLET TREATMENT EFFLUENT |
| V | VALVE, VOLT, VENT |
| VAC | VACUUM |
| VBF | VALVE, AWWA BUTTERFLY |
| VBI | VALVE, INDUSTRIAL BUTTERFLY |
| VBL | VALVE, BALL |
| VBM | VALVE, BALL MISCELLANEOUS |
| VC | VERTICAL CURVE, VICTAULIC COUPLING |
| VERT | VERTICAL |
| W | WEST, WIDE, WINDOW, WATT, WATER |
| W/ | WITH |
| W/O | WITHOUT |
| WAS | WASTE ACTIVATED SLUDGE |
| WB | WALLBOARD |
| WC | WATER CLOSET |
| WD | WOOD, WIDTH |
| WH | WALL HYDRANT |
| WL | WATER LEVEL |
| WM | WATER METER, WATTMETER |
| WS | WATERSTOP |
| WT | WEIGHT |
| WW | WETWELL |
| WWF | WELDED WIRE FABRIC |
| WWR | WASTEWATER-RAW |
| WWS | WASTEWATER-SCREENED |
| x | BY,TIMES |
| YH | YARD HYDRANT |
| # | NUMBER |
| % | PERCENT |
| & | AND |
| @ | AT |
| < | DEFLECTION ANGLE |

COASTAL DEVELOPMENT PERMIT PLANS

| NO. | DATE | REVISIONS AND RECORD OF USE | BY | CHK | APP |
|---|---|---|---|---|---|
| B | 7/30/2019 | 60% SUBMITTAL | KEZ | RT | EVB |
| A | 3/5/2019 | 30% SUBMITTAL | KEZ | RWF | EVB |

BLACK & VEATCH

JOINT VENTURE

FILANC

BLACK & VEATCH

CITY OF MORRO BAY
MORRO BAY WATER
RECLAMATION FACILITY (WRF)

GENERAL
ABBREVIATIONS

DESIGNED: EVB, KEZ
DETAILED: MAK
CHECKED:
APPROVED:
DATE:

0 1/2 1
IF THIS BAR DOES NOT MEASURE 1" THEN DRAWING IS NOT TO FULL SCALE

PROJECT NO.
400530

00-G-004
SHEET
OF

D400530
FDB1203_PW

## GENERAL LEGEND

- SURFACED STREET, ROAD OR DRIVE
- SURFACED STREET, ROAD OR DRIVE WITH CURBS
- NON-SURFACED STREET, ROAD OR DRIVE
- CONCRETE WALK
- CB — CATCH BASIN
- MANHOLE
- DRAINAGE COURSE OR FLOW LINE
- 326 — EXISTING GROUND CONTOUR
- 326 — FINISH GRADE CONTOUR
- BANK OR SLOPE LINES
- •#3 OR T.H.#3 B3 — TEST HOLE AND NUMBER
- SURVEY LINE WITH PI, PT, OR POT
- CONCRETE ENCASEMENT-PLAN
- CONCRETE REACTION BLOCKING AT BEND, PLUG OR TEE
- DRAINS OR CULVERTS
- TUNNEL CASING - PLAN
- SMALLER THAN 24" / 24" AND LARGER — EXISTING
- GENERAL LAYOUT YARD PIPING
- SMALLER THAN 24" / 24" AND LARGER — NEW
- NEW WATER LINE OR SEWER IN PROFILE
- NON-CONNECTING PIPING
- CE/L — CONSTRUCTION EASEMENT LINE
- E/L — EASEMENT LINE
- R/W — RIGHT-OF-WAY LINE
- PL — PROPERTY LINE
- PE/L — PERMANENT EASEMENT LINE
- TE/L — TEMPORARY EASEMENT LINE
- UE/L — UTILITY EASEMENT LINE
- S/L — SURVEY LINE / SECTION LINE
- W — WATER LINE
- G — GAS LINE
- T — TELEPHONE (UNDERGROUND)
- E — ELECTRICAL (UNDERGROUND)
- P — T — POWER OR TELEPHONE LINES (OVERHEAD)
- (G) (W) — WATER OR GAS VALVE
- (WM) (GM) — WATER OR GAS METER
- TELEPHONE OR POWER POLE WITH GUY ANCHOR
- FIRE HYDRANT
- Y — YARD HYDRANT
- STREET LIGHT POLE
- TRAFFIC SIGNAL
- TRAFFIC SIGN
- STOPSIGN
- HEDGE, BRUSH, SHRUBS, WOODS
- 10" — DECIDUOUS TREE AND TRUNK DIAMETER
- 4" — CONIFEROUS TREE AND TRUNK DIAMETER
- SWAMP

- BUILDINGS, STRUCTURES
- STRUCTURES UNDERGROUND
- FUTURE BUILDINGS, STRUCTURES
- CLOTHES LINE
- SWING SET
- FENCE
- FENCE, WOOD
- RAILROAD, EACH TRACK
- CENTERLINE
- 1 / AC45 — SECTION NUMBER OR DETAIL LETTER; DRAWING NUMBER ON WHICH SECTION OR DETAIL APPEARS; OR WHERE SECTION IS CUT OR DETAIL IS NOTED
- DOOR, WINDOW AND LOUVER SCHEDULE REFERENCE
- 1 / A045 — WALL ELEVATION
- D — ABBREVIATION
- 4 — SCHEDULE NUMBER
- F102 — ROOM NUMBER; AREA DESIGNATION
- PV 10 — EQUIPMENT OR VALVE IDENTIFICATION CODE; EQUIPMENT NUMBER
- PV-10 — EQUIPMENT OR VALVE IDENTIFICATION CODE; EQUIPMENT NUMBER
- EQUIP CALLOUT — EQUIPMENT REPRESENTATION WITH CALLOUT
- EXISTING FACILITY TO BE DEMOLISHED OR REMOVED

## PIPING SYSTEMS

- NEW PIPING
- UNDERGROUND PIPING
- EXISTING PIPING
- FUTURE PIPING

## PIPING ACCESSORIES LEGEND

- BLIND FLANGE
- CAP OR PLUG
- CO — CLEANOUT
- CROSS
- DIAPHRAGM SEAL
- ELBOW
- ELBOW DOWN
- ELBOW TURNING UP
- SIZE — HOSE CONNECTION
- Q — QUICK COUPLING
- REDUCER
- RUPTURE DISK
- TEE
- TEE LINE DOWN
- TEE LINE UP
- WYE
- S — WYE STRAINER
- S — WYE STRAINER WITH BLOWOFF
- DRAIN OR BELL-UP
- CALIBRATING COLUMN
- TRAP
- UNION
- WALL SLEEVE
- AT — AUTOMATIC DRAIN TRAP
- DT — DRIP TRAP
- S S — DUPLEX STRAINER
- EXPANSION COMPENSATOR
- F — INLINE FILTER
- FLEXIBLE HOSE OR TUBING
- FLEXIBLE CONNECTOR
- HOSE REEL
- INJECTOR, EDUCTOR, BLENDER
- ORIFICE PLATE
- PIPE GUIDE
- S — SEDIMENT TRAP
- S — STRAINER
- SUCTION DIFFUSER
- PIPE DIFFUSER
- SURGE CHAMBER
- VENT - SCREENED
- VENT
- P — PRESSURE GAUGE W/SNUBBER
- T — TEMPERATURE INDICATOR
- THERMOMETER
- ELECTROMAGNETIC/ULTRASONIC FLOWMETER
- PITOT TUBE
- ROTAMETER
- TURBINE OR PROPELLOR FLOWMETER
- M — SET STOP METER
- VENTURI
- FM — FLOW METER

## MISCELLANEOUS EQUIPMENT

- STATIC MIXER
- VERTICAL MIXER
- SIGHT GLASS
- CENTRIFUGE
- CHANNEL DIFFUSER
- COMPRESSOR OR BLOWER
- PIPE ANCHOR
- PUMP
- SLUICE GATE
- SLIDE GATE
- STOP PLATE
- BAR SCREEN
- EXPANSION TANK
- SCREW (LIFT) PUMP
- FLUME
- WEIR

## MATERIALS LEGEND

- EARTH OR GRADE
- GRANULAR FILL (CRUSHED ROCK OR GRAVEL)
- ROCK
- NEW CONCRETE
- EXISTING CONCRETE, PRECAST OR PRESTRESSED CONCRETE
- BRICK, FACE
- BRICK, COMMON
- CONCRETE MASONRY UNITS (CMU)
- CUT STONE OR SAND FILL, GROUT, MORTAR, AND PLASTER
- WOOD, SHEATHING, PANELING, DECKING, ETC.
- WOOD, STUDS, BEAMS, JOISTS, ETC.
- RIPRAP
- CHECKERED PLATE
- STEEL (FOR 1"SCALE & LARGER)
- STEEL OR ALUMINUM (FOR 3/4" SCALE & SMALLER)
- BAR GRATING (LINES IN DIRECTION OF SPAN)
- ALUMINUM
- INSULATION (BATT)
- INSULATION (RIGID)

## VALVE LEGEND

- PINCH VALVE
- PLUG VALVE, ECCENTRIC
- PLUG VALVE, NON-ECCENTRIC
- BUTTERFLY VALVE
- GATE VALVE
- BALL VALVE
- GLOBE VALVE
- CHECK VALVE
- 3 WAY VALVE
- 4 WAY VALVE
- ANGLE VALVE
- CHLORINE INSTITUTE VALVE
- DIAPHRAGM VALVE
- THROTTLING VALVE
- FLAME ARRESTER OR CHECK
- BACKWATER VALVE
- INLINE PRESSURE RELIEF VALVE
- PRESSURE REGULATING VALVE
- PRESSURE SUSTAINING OR MAINTAINING VALVE
- VACUUM BREAKER
- THERMAL SHUTOFF VALVE
- EXPLOSION RELIEF VALVE
- HOSE FAUCET
- HOSE FAUCET W/VACUUM BREAKER
- HOSE VALVE W/HOSE NIPPLE
- BACKFLOW PREVENTER
- SAFETY RELIEF VALVE
- V — VACUUM RELIEF CHECK VALVE
- PRESSURE VACUUM RELIEF VALVE

## ACTUATOR LEGEND

- E — ELECTRIC
- FLOAT
- DIAPHRAGM
- P/O — AIR/OIL TANDEM
- S — SOLENOID
- A — AIR

NOTE :
SYMBOLS ON THIS SHEET WHICH ARE TO BE SHOWN AS EXISTING SHALL BE DELINEATED AS SCREENED
THOSE SYMBOLS WHICH ARE TO BE SHOWN AS NEW SHALL BE DELINEATED AS SOLID (HEAVY)

# COASTAL DEVELOPMENT PERMIT PLANS

| NO. | BY | CHK | APP | DATE | REVISIONS AND RECORD OF USE |
|---|---|---|---|---|---|
| B | KEZ | RT | EVB | 7/30/2019 | 60% SUBMITTAL |
| A | KEZ | RWF | EVB | 3/5/2019 | 30% SUBMITTAL |

BLACK & VEATCH
JOINT VENTURE
FILANC
BLACK & VEATCH

CITY OF MORRO BAY
MORRO BAY WATER
RECLAMATION FACILITY (WRF)

GENERAL LEGEND

DESIGNED: EVB, KEZ
DETAILED: MAK
CHECKED:
APPROVED:
DATE:

0 1/2 1
IF THIS BAR DOES NOT MEASURE 1" THEN DRAWING IS NOT TO FULL SCALE

PROJECT NO.
400530

00-G-005
SHEET
OF

D400530
FD81203_PW

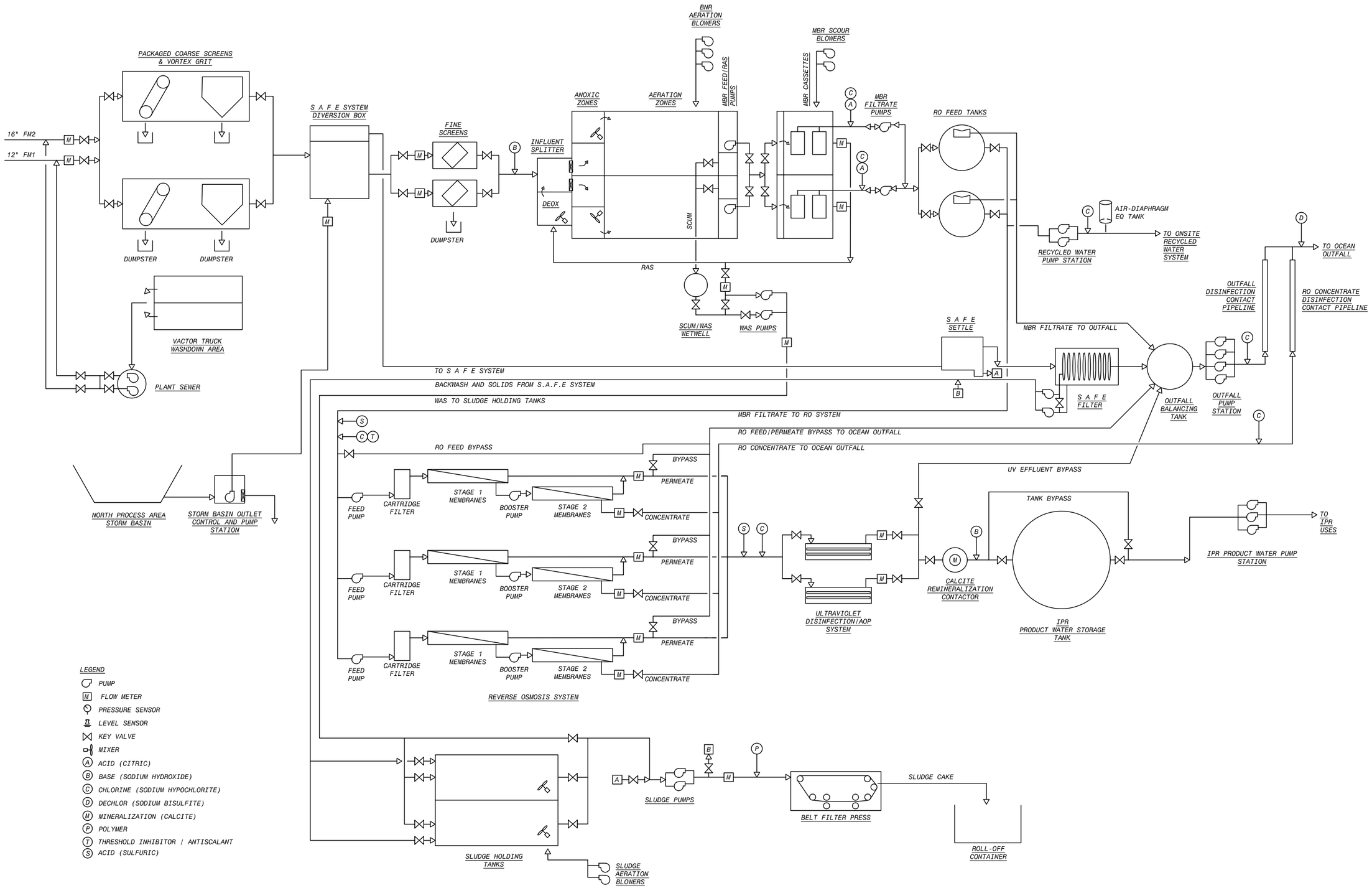


| NO. | BY | CHK | APP |
|---|---|---|---|
| B | KEZ | RT | EVB |
| A | KEZ | RWF | EVB |

REVISIONS AND RECORD OF USE

| DATE | |
|---|---|
| 7/30/2019 | 60% SUBMITTAL |
| 3/5/2019 | 30% SUBMITTAL |

BLACK & VEATCH

JOINT VENTURE

FILANC

BLACK & VEATCH

CITY OF MORRO BAY
MORRO BAY WATER
RECLAMATION FACILITY (WRF)

GENERAL
PROCESS SCHEMATIC

DESIGNED: EVB, KEZ
DETAILED: MAK
CHECKED:
APPROVED:
DATE:

0 1/2 1
IF THIS BAR DOES NOT MEASURE 1" THEN DRAWING IS NOT TO FULL SCALE

PROJECT NO.
400530

00-G-006
SHEET
OF

COASTAL DEVELOPMENT PERMIT PLANS

D400530
FD81203_PW

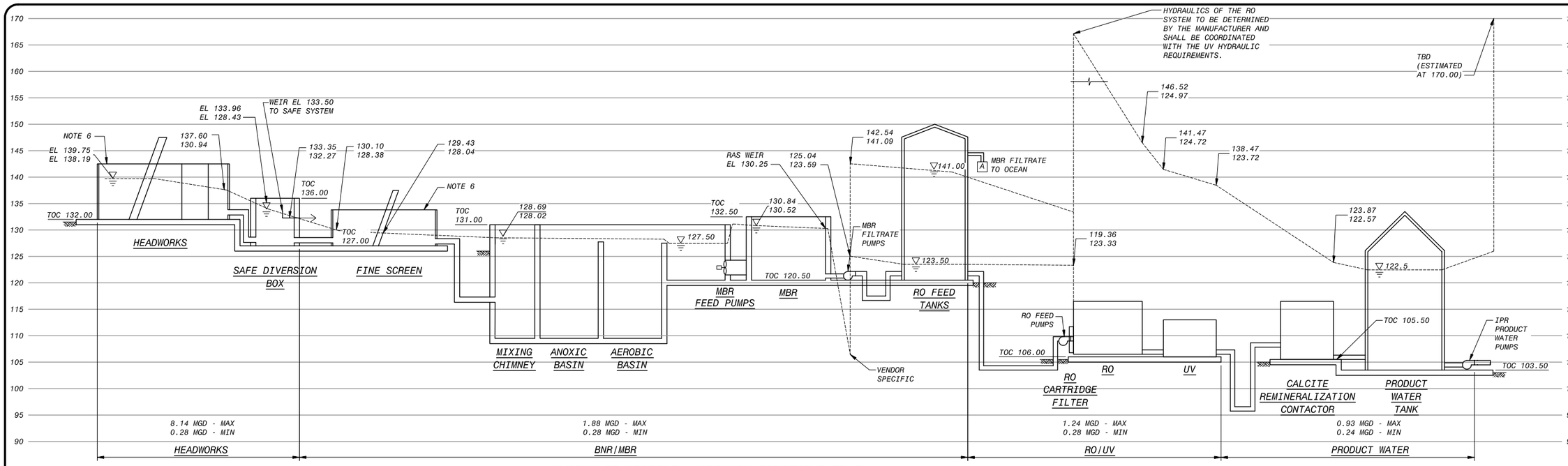


## HYDRAULIC PROFILE - PRIMARY TREATMENT TRAIN

VERT SCALE: 1" = 10'-0"

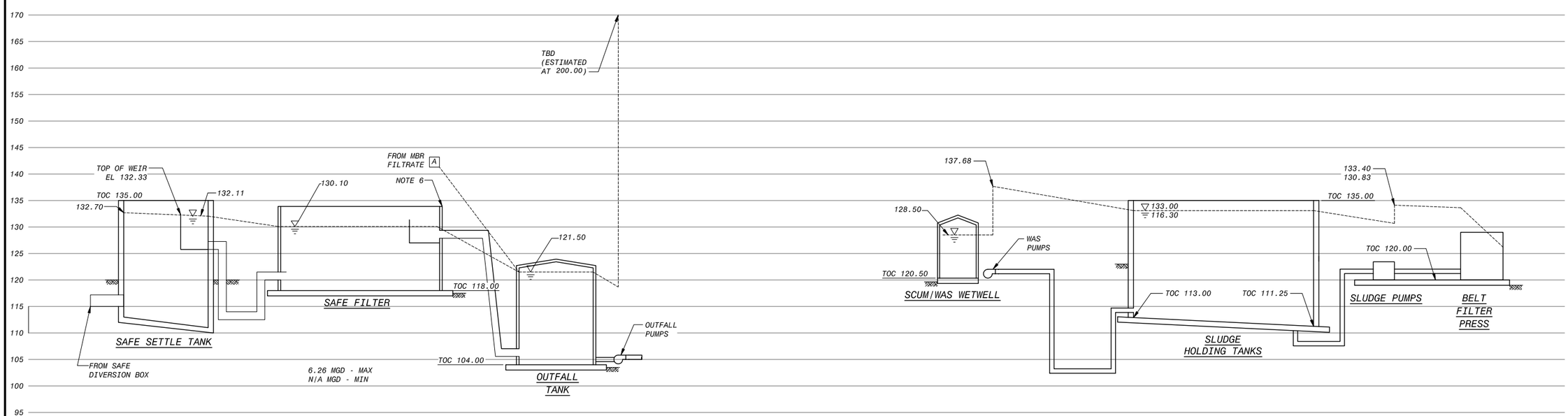


## HYDRAULIC PROFILE - SAFE SYSTEM

VERT SCALE: 1" = 10'-0"

## HYDRAULIC PROFILE - RESIDUALS SYSTEM

VERT SCALE: 1" = 10'-0"

NOTES:

1. PEAK HOUR FLOW UP TO THE SPLITTER BOX 8.14 MGD.
2. PEAK HOUR FLOW BETWEEN SPLITTER BOX AND MBR IS 1.88 MGD.
3. PEAK HOUR FLOW DOWNSTREAM OF MBR IS 1.16 MGD.
4. THE MINIMUM DIURNAL FLOW MODELED IS 0.25 MGD. THIS OCCURS THROUGHOUT THE LIQUID STREAM OF THE PLANT.
5. THE TOP NUMBER ON THE HYDRAULIC PROFILE IS THE MAXIMUM HGL. THE LOWER NUMBER ON THE HYDRAULIC PROFILE IS THE MINIMUM HGL.
6. STAINLESS STEEL TANK FURNISHED WITH EQUIPMENT PACKAGE. TOP OF TANK EL IS VENDOR SPECIFIC WITH AT LEAST 2' OF FREEBOARD.
7. NOTE FINISHED GRADE ELEVATIONS SHOWN THAT ARE ADJACENT TO TANKS AND CONCRETE SLABS ARE APPROXIMATE. SEE CIVIL GRADING AND PAVING DRAWINGS FOR EXACT FINISHED GRADE ELEVATIONS.

# COASTAL DEVELOPMENT PERMIT PLANS

| NO. | BY | CHK | APP | DATE | REVISIONS AND RECORD OF USE |
|---|---|---|---|---|---|
| B | KEZ | RT | EVB | 7/30/2019 | 60% SUBMITTAL |
| A | KEZ | RWF | EVB | 3/5/2019 | 30% SUBMITTAL |

BLACK & VEATCH JOINT VENTURE

FILANC BLACK & VEATCH

CITY OF MORRO BAY
MORRO BAY WATER RECLAMATION FACILITY (WRF)

GENERAL HYDRAULIC PROFILES

DESIGNED: EVB, KEZ
DETAILED: MAK
CHECKED:
APPROVED:
DATE:

0 1/2 1
IF THIS BAR DOES NOT MEASURE 1" THEN DRAWING IS NOT TO FULL SCALE

PROJECT NO. 400530

00-G-007
SHEET OF

D400530
FD81203_PW

## STRUCTURE, ROOM OR AREA / HAZARDOUS MATERIALS

| Name (civil or architectural input) | Room No | Table, Row, & Line 2016 | Fire Protect Measures | Description (chemical feed input) | Quantity | Hazard Classification Type | Hazard Classification Description |
|---|---|---|---|---|---|---|---|
| Operations Building | | | | | | | |
| Manager's Office | OB.01 | --- | --- | --- | --- | --- | --- |
| Office 2 | OB.02 | --- | --- | --- | --- | --- | --- |
| Office 3 | OB.03 | --- | --- | --- | --- | --- | --- |
| Office 4 | OB.04 | --- | --- | --- | --- | --- | --- |
| Office 5 | OB.05 | --- | --- | --- | --- | --- | --- |
| Copy/Storage | OB.06 | --- | --- | --- | --- | --- | --- |
| Map Room | OB.07 | --- | --- | --- | --- | --- | --- |
| Break Room | OB.08 | --- | --- | --- | --- | --- | --- |
| Lobby | OB.09 | --- | --- | --- | --- | --- | --- |
| Conference Room | OB.10 | --- | --- | --- | --- | --- | --- |
| Table/Chair Storage | OB.11 | --- | --- | --- | --- | --- | --- |
| Control Room | OB.12 | --- | --- | --- | --- | --- | --- |
| Server Room | OB.13 | --- | --- | --- | --- | --- | --- |
| Electrical Room | OB.14 | --- | --- | --- | --- | --- | --- |
| Laundry/Uniform Storage Room | OB.15 | --- | --- | --- | --- | --- | --- |
| On-Call Room | OB.16 | --- | --- | --- | --- | --- | --- |
| Men's Locker/Shower/Restroom | OB.17 | --- | --- | --- | --- | --- | --- |
| Women's Locker/Shower/Restroom | OB.18 | --- | --- | --- | --- | --- | --- |
| Unisex Restroom | OB.19 | --- | --- | --- | --- | --- | --- |
| Janitor/Mechanical Room | OB.20 | --- | --- | --- | --- | --- | --- |
| Sample Room 1 | OB.21 | --- | --- | --- | --- | --- | --- |
| Sample Room 2 | OB.22 | --- | --- | --- | --- | --- | --- |
| Hall 1 | OB.23 | --- | --- | --- | --- | --- | --- |
| Hall 2 | OB.24 | --- | --- | --- | --- | --- | --- |
| RO/UV Building | | | | | | | |
| Process Room | RO.01 | | | | | | --- |
| Electrical Room | RO.02 | | | | | | --- |
| Maintenance Building | | | | | | | |
| Shop Room | MB.01 | | | --- | --- | --- | --- |
| Laboratory | MB.02 | | | --- | --- | --- | --- |
| I&C Workshop | MB.03 | | | --- | --- | --- | --- |
| Unisex Restroom | MB.04 | | | --- | --- | --- | --- |
| Satellite Control Room | MB.05 | | | --- | --- | --- | --- |
| Hall/Landing/Stair | MB.06 | | | --- | --- | --- | --- |
| Paint/Fuel Storage | MB.07 | | | | | | --- |
| Electrical Building | | | | | | | |
| Electrical Room | 101 | | | | | | |
| Water and Collection Supply Storage Building | | | | | | | |
| TBD | | | | | | | |
| Outdoor Areas | | | | | | | |
| Headworks Area | | | | | | | |
| Coarse Screens | N/A | 5.2.2, 2, a | | | | | |
| Grit Removal | N/A | 5.2.2, 5, a | | | | | |
| SAFE Diversion Box | N/A | 5.2.2, 1, a | | | | | |
| Fine Screens Area | N/A | 5.2.2, 2, a | | | | | |
| Treatment Area | | | | | | | |
| BNR Basins | N/A | 5.2.2, 9, c | | | | | |
| Scum / WAS Pumps | N/A | 6.2.2(a), 6, c | | | | | |
| MBR Cassette Tanks | N/A | 5.2.2, 9, c | | | | | |
| RO Feed Tanks and On Site Recycle Pumps | N/A | 5.2.2, 27 | | | | | |
| Outfall Area | | | | | | | |
| Calcite Contacotrs | N/A | Not classified | | | | | |
| Product Water Storage Tank | N/A | Not classified | | | | | |
| IPR Pumps | N/A | Not classified | | | | | |
| Outfall Pumps | N/A | 5.2.2, 27 | | | | | |
| Dechlorination Station | | | | | | | |
| Sodium Bisulfate Injection Point | N/A | | | | | | |
| Chemical Area | | | | | | | |
| Sodium Hydroxide | N/A | | | Sodium Hydroxide - 50% | 8,000 gallon | | |
| Sodium Hypochlorite | N/A | | | Sodium Hypochlorite - 12% | 8,000 gallon | | |
| Sodium Bisulfite | N/A | | | Sodium Bisulfite - 38% | 330 gallon | | |
| Citric Acid | N/A | | | Citric Acid - 50% | 330 gallon | | |
| Antiscalant | N/A | | | Propritary chemical (phosphate) | 330 gallon | | |
| Sulfuric Acid (not currently in scope) | N/A | | | Sulfuric Acid - 93% | 330 gallon | | |
| Dewatering Area | | | | | | | |
| Sludge Holding Tanks | N/A | 6.2.2(a), 11, c | | | | | |
| Belt Filter Press | N/A | 6.2.2(a), 3, c | | | | | |
| Polymer | N/A | | | Emulsion Polymer - 35% | 330 gallon | | |

## BUILDING CODE (architectural input) / FIRE PROTECTION (mech input) / VENTILATION (mech input)

| Name | Occup Class | Type of Cons't | Area Allowed | Area sq ft | Occup Load | ADA Access | Exits Reqd | Exits Actual | Building Height Allowed | Building Height Actual | Stories | Grade Location | Hazard Class | Sprinkler Type | Density/Area (Note 1) | Smoke Detection | Cont/Int | Odor Control | Rate | Airflow Switch |
|---|---|---|---|---|---|---|---|---|---|---|---|---|---|---|---|---|---|---|---|---|
| Operations Building | B | V-B | 36,000 | 5,555 | 107 | Yes | 1 | 3 | 60' | 24' | 1 | Above | | | | | | | | |
| Manager's Office | B | V-B | | 179 | 2 | Yes | | 1 | | | | Above | | Wet | | Yes | Cont | No | | |
| Office 2 | B | V-B | | 151 | 2 | Yes | | 1 | | | | Above | | Wet | | Yes | Cont | No | | |
| Office 3 | B | V-B | | 151 | 2 | Yes | | 1 | | | | Above | | Wet | | Yes | Cont | No | | |
| Office 4 | B | V-B | | 126 | 2 | Yes | | 2 | | | | Above | | Wet | | Yes | Cont | No | | |
| Office 5 | B | V-B | | 126 | 2 | Yes | | 1 | | | | Above | | Wet | | Yes | Cont | No | | |
| Copy/Storage | B | V-B | | 124 | 2 | Yes | | 1 | | | | Above | | Wet | | Yes | Cont | No | | |
| Map Room | B | V-B | | 284 | 3 | Yes | | 1 | | | | Above | | Wet | | Yes | Cont | No | | |
| Break Room | B | V-B | | 902 | 60 | Yes | | 2 | | | | Above | | Wet | | Yes | Cont | No | | |
| Lobby | B | V-B | | 168 | 2 | Yes | | --- | | | | Above | | Wet | | Yes | Cont | No | | |
| Conference Room | B | V-B | | 179 | 2 | Yes | | 1 | | | | Above | | Wet | | Yes | Cont | No | | |
| Table/Chair Storage | B | V-B | | 77 | --- | Yes | | 1 | | | | Above | | Wet | | Yes | Cont | No | | |
| Control Room | B | V-B | | 653 | 7 | Yes | | 1 | | | | Above | | Wet | | Yes | Cont | No | | |
| Server Room | B | V-B | | 88 | --- | Yes | | 1 | | | | Above | | Wet | | Yes | Cont | No | | |
| Electrical Room | B | V-B | | 110 | --- | No | | 1 | | | | Above | | Wet | | Yes | Cont | No | | |
| Laundry/Uniform Storage Room | B | V-B | | 387 | 4 | Yes | | 1 | | | | Above | | Wet | | Yes | Cont | No | | |
| On-Call Room | B | V-B | | 107 | 2 | Yes | | 1 | | | | Above | | Wet | | Yes | Cont | No | | |
| Men's Locker/Shower/Restroom | B | V-B | | 537 | 11 | Yes | | 1 | | | | Above | | Wet | | Yes | Cont | No | | |
| Women's Locker/Shower/Restroom | B | V-B | | 342 | 7 | Yes | | 1 | | | | Above | | Wet | | Yes | Cont | No | | |
| Unisex Restroom | B | V-B | | 61 | 1 | Yes | | 1 | | | | Above | | Wet | | Yes | Cont | No | | |
| Janitor/Mechanical Room | B | V-B | | 130 | 1 | Yes | | 1 | | | | Above | | Wet | | Yes | Cont | No | | |
| Sample Room 1 | B | V-B | | 70 | --- | No | | 1 | | | | Above | | Wet | | Yes | Cont | No | | |
| Sample Room 2 | B | V-B | | 77 | --- | No | | 1 | | | | Above | | Wet | | Yes | Cont | No | | |
| Hall 1 | B | V-B | | 151 | --- | Yes | | 2 | | | | Above | | Wet | | Yes | Cont | No | | |
| Hall 2 | B | V-B | | 375 | --- | Yes | | --- | | | | Above | | Wet | | Yes | Cont | No | | |
| RO/UV Building | F-2 | II-B | 92,000 | 3,960 | 14 | No | 1 | 5 | 55' | 27' | 1 | | | | | | | | | |
| Process Room | F-2 | II-B | | 3,307 | 11 | No | 1 | 4 | | | | Above | | | | Yes | | | | |
| Electrical Room | F-2 | II-B | | 653 | 3 | No | 1 | 1 | | | | Above | | | | Yes | | | | |
| Maintenance Building | F-2 | II-B | 92,000 | 5,400 | 54 | Yes | 1 | 3 | 60' | 29' | 1 | | | | | | | | | |
| Shop Room | F-2 | II-B | | 4,223 | 43 | Yes | | 1 | | | | Above | | Wet | | Yes | Cont | No | | |
| Laboratory | F-2 | II-B | | 451 | 4 | Yes | | 1 | | | | Above | | Wet | | Yes | Cont | No | | |
| I&C Workshop | F-2 | II-B | | 180 | 2 | Yes | | 1 | | | | Above | | Wet | | Yes | Cont | No | | |
| Unisex Restroom | F-2 | II-B | | 108 | 2 | Yes | | 1 | | | | Above | | Wet | | Yes | Cont | No | | |
| Satellite Control Room | F-2 | II-B | | 108 | 2 | Yes | | 1 | | | | Above | | Wet | | Yes | Cont | No | | |
| Hall/Landing/Stair | F-2 | II-B | | 218 | --- | Yes | | --- | | | | Above | | Wet | | Yes | Cont | No | | |
| Paint/Fuel Storage | F-2 | II-B | | 112 | 2 | No | | 1 | | | | Above | | Wet | | Yes | Cont | No | | |

## FIRE CODE REQUIREMENTS (all input, see individual line items below) / ELECTRICAL CODE (electrical input) / REMARKS

| Name | exempt amount (chem feed/civil input) | secondary contain (chem feed/civil input) | cont. ventilation (mech input) | vent shutoff switches (mech input) | fire sprinkler system (mech input) | explosion control (civil/arch/chem feed input) | standby power (elec input) | emergency power (elec input) | limit controls (chem feed/civil input) | emergency alarm NAC (chem feed/elec input) | alarm supervision (elec input) | treatment system (mech input) | excess flow control (chem feed input) | gas detection (chem feed input) | breathing apparatus (chem feed input) | smoke detection (elec input) | liquid tight floor (chem feed/civil input) | non-comb. const (arch/civil input) | fire extinguishers (arch input) | smoke and heat vents (arch input) | Manual alarm box (fire protection) | Emergency Pull (fire protection) | Class | Group | Division | REMARKS |
|---|---|---|---|---|---|---|---|---|---|---|---|---|---|---|---|---|---|---|---|---|---|---|---|---|---|---|
| Operations Building | | | | | | | | | | | | | | | | X | | | X | | X | | | | | |
| Manager's Office | | | | | | | | | | | | | | | | | | | | | | | --- | --- | --- | |
| Office 2 | | | | | | | | | | | | | | | | | | | | | | | --- | --- | --- | |
| Office 3 | | | | | | | | | | | | | | | | | | | | | | | --- | --- | --- | |
| Office 4 | | | | | | | | | | | | | | | | | | | | | | | --- | --- | --- | |
| Office 5 | | | | | | | | | | | | | | | | | | | | | | | --- | --- | --- | |
| Copy/Storage | | | | | | | | | | | | | | | | | | | | | | | --- | --- | --- | |
| Map Room | | | | | | | | | | | | | | | | | | | | | | | --- | --- | --- | |
| Break Room | | | | | | | | | | | | | | | | | | | | | | | --- | --- | --- | |
| Lobby | | | | | | | | | | | | | | | | | | | | | | | --- | --- | --- | |
| Conference Room | | | | | | | | | | | | | | | | | | | | | | | --- | --- | --- | |
| Table/Chair Storage | | | | | | | | | | | | | | | | | | | | | | | --- | --- | --- | |
| Control Room | | | | | | | | | | | | | | | | | | | | | | | --- | --- | --- | |
| Server Room | | | | | | | | | | | | | | | | | | | | | | | --- | --- | --- | |
| Electrical Room | | | | | | | | | | | | | | | | | | | | | | | --- | --- | --- | |
| Laundry/Uniform Storage Room | | | | | | | | | | | | | | | | | | | | | | | --- | --- | --- | |
| On-Call Room | | | | | | | | | | | | | | | | | | | | | | | --- | --- | --- | |
| Men's Locker/Shower/Restroom | | | | | | | | | | | | | | | | | | | | | | | --- | --- | --- | |
| Women's Locker/Shower/Restroom | | | | | | | | | | | | | | | | | | | | | | | --- | --- | --- | |
| Unisex Restroom | | | | | | | | | | | | | | | | | | | | | | | --- | --- | --- | |
| Janitor/Mechanical Room | | | | | | | | | | | | | | | | | | | | | | | --- | --- | --- | |
| Sample Room 1 | | | | | | | | | | | | | | | | | | | | | | | --- | --- | --- | |
| Sample Room 2 | | | | | | | | | | | | | | | | | | | | | | | --- | --- | --- | |
| Hall 1 | | | | | | | | | | | | | | | | | | | | | | | --- | --- | --- | |
| Hall 2 | | | | | | | | | | | | | | | | | | | | | | | --- | --- | --- | |
| RO/UV Building | | | | | | | | | | | | | | | | | | | | | | | | | | |
| Process Room | | | | | | | | | | | | | | | | | | | X | | | | --- | --- | --- | |
| Electrical Room | | | | | | | | | | | | | | | | X | | | X | | X | | --- | --- | --- | |
| Maintenance Building | | | | | | | | | | | | | | | | X | | | X | | X | | | | | |
| Shop Room | | | | | | | | | | | | | | | | | | | | | | | --- | --- | --- | |
| Laboratory | | | | | | | | | | | | | | | | | | | | | | | --- | --- | --- | |
| I&C Workshop | | | | | | | | | | | | | | | | | | | | | | | --- | --- | --- | |
| Unisex Restroom | | | | | | | | | | | | | | | | | | | | | | | --- | --- | --- | |
| Satellite Control Room | | | | | | | | | | | | | | | | | | | | | | | --- | --- | --- | |
| Hall/Landing/Stair | | | | | | | | | | | | | | | | | | | | | | | --- | --- | --- | |
| Paint/Fuel Storage | | | | | | | | | | | | | | | | | | | | | | | --- | --- | --- | |
| Electrical Building | | | | | | | | | | | | | | | | X | | | X | | X | | | | | |
| Electrical Room | | | | | | | | | | | | | | | | | | | | | | | --- | --- | --- | |
| Water and Collection Supply Storage Building | | | | | | | | | | | | | | | | | | | X | | | | | | | |
| Outdoor Areas | | | | | | | | | | | | | | | | | | | X | | | | | | | |

NOTES

ABBREVIATIONS

| | |
|---|---|
| AC/HR | Air Changes per Hour |
| Cfm | Cubic Feet Per Minute |
| Cont | Continuous |
| Gal | Gallons |
| GPM | Gallons per Minute |
| HE | Health Hazard |
| Int | Intermittent |
| Lbs | Pounds |
| N/A | Not Applicable |
| NL | Not Limited |
| OH | Ordinary Hazard Group |
| PH | Physical Hazard |
| Sqft | Square Feet |

COASTAL DEVELOPMENT PERMIT PLANS

| NO. | DATE | REVISIONS AND RECORD OF USE | BY | CHK | APP |
|---|---|---|---|---|---|
| B | 7/30/2019 | 60% SUBMITTAL | KEZ | RT | EVB |
| A | 3/5/2019 | 30% SUBMITTAL | KEZ | RWF | EVB |

BLACK & VEATCH
JOINT VENTURE
FILANC
BLACK & VEATCH

CITY OF MORRO BAY
MORRO BAY WATER RECLAMATION FACILITY (WRF)

GENERAL
CODE CLASSIFICATION TABLE

DESIGNED: EVB, KEZ
DETAILED: MAK
CHECKED:
APPROVED:
DATE:

0 1/2 1
IF THIS BAR DOES NOT MEASURE 1" THEN DRAWING IS NOT TO FULL SCALE

PROJECT NO.
400530

00-G-008
SHEET
OF

D400530
F081203_PW

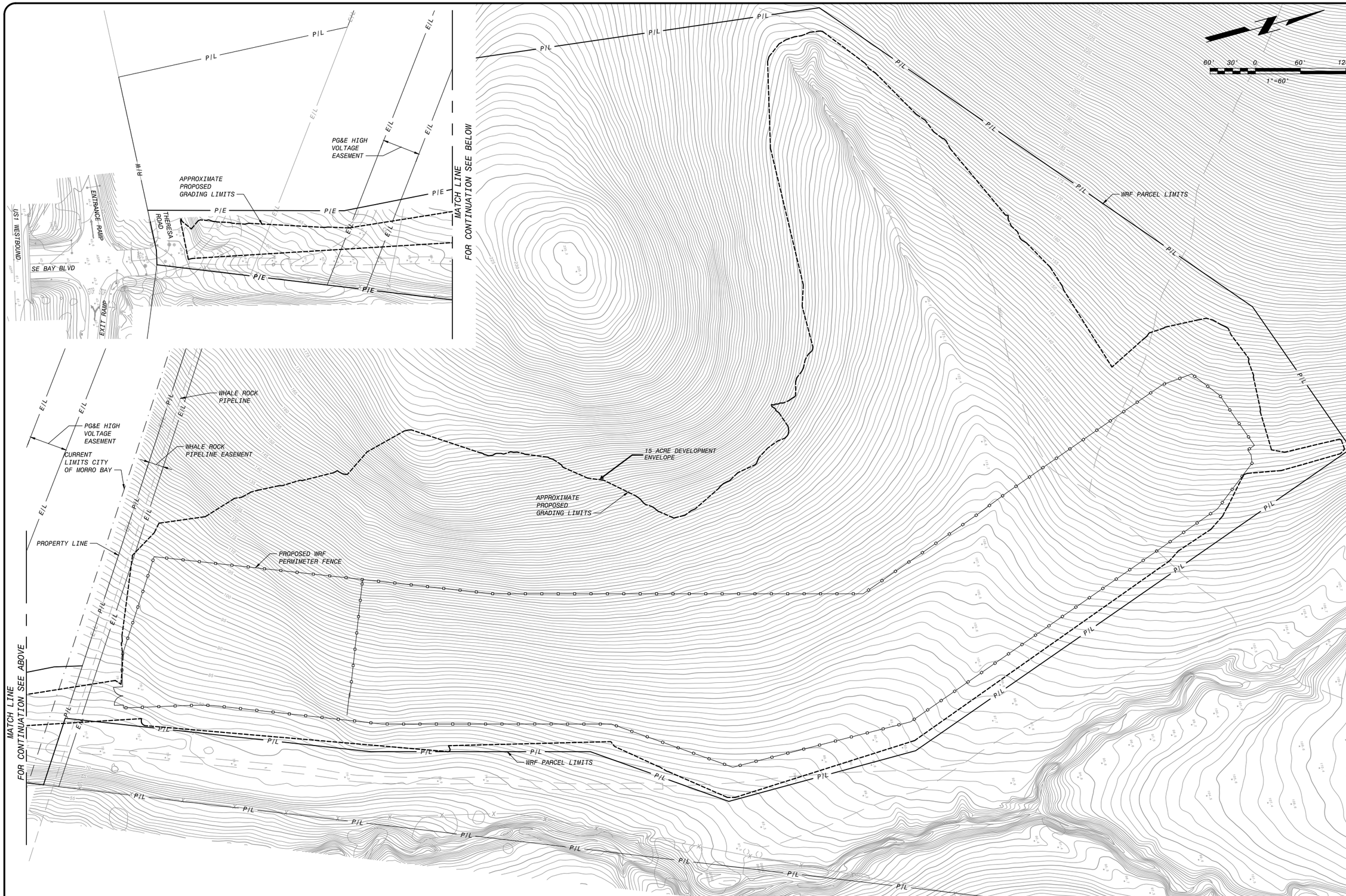


| NO. | BY | CHK | APP |
|---|---|---|---|
| B | EVB | RTB | EVB |
| A | ENV | RWF | EVB |

REVISIONS AND RECORD OF USE

| DATE | |
|---|---|
| 7/30/2019 | 60% SUBMITTAL |
| 3/5/2019 | 30% SUBMITTAL |

BLACK & VEATCH
JOINT VENTURE
FILANC
BLACK & VEATCH

# CITY OF MORRO BAY
## MORRO BAY WATER RECLAMATION FACILITY (WRF)

SITE - OVERALL
CIVIL
EXISTING GRADE AND FEATURES

DESIGNED: EVB
DETAILED: SMM
CHECKED:
APPROVED:
DATE:

0 1/2 1
IF THIS BAR DOES NOT MEASURE 1" THEN DRAWING IS NOT TO FULL SCALE

PROJECT NO.
400530

10-C-001
SHEET
OF

# COASTAL DEVELOPMENT PERMIT PLANS

FD9000A
D400530
PLOTTED: 7/30/2019 12:26 PM FILE: C:\pw_working\bvw_americas\d0683625\400530-10-C-001.dwg

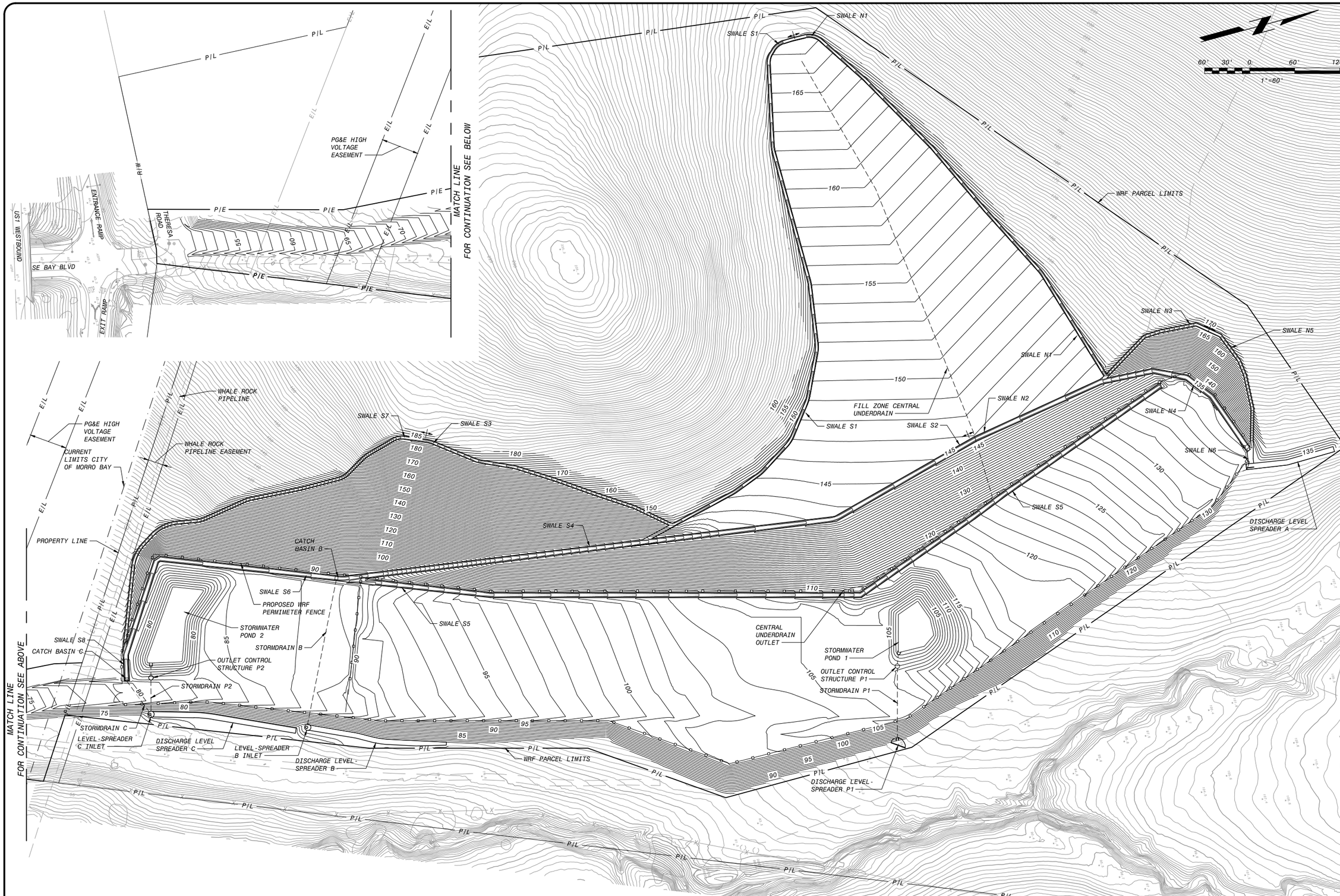


| NO. | BY | CHK | APP |
|---|---|---|---|
| B | EVB | RTB | EVB |

| DATE | REVISIONS AND RECORD OF USE |
|---|---|
| 7/30/2019 | 60% SUBMITTAL |

BLACK & VEATCH

JOINT VENTURE

FILANC

BLACK & VEATCH

# CITY OF MORRO BAY
## MORRO BAY WATER RECLAMATION FACILITY (WRF)

SITE - OVERALL
CIVIL
SITE PREP FINISHED GRADE OVERVIEW

DESIGNED: EVB
DETAILED: SMM
CHECKED:
APPROVED:
DATE:

0 1/2 1
IF THIS BAR DOES NOT MEASURE 1" THEN DRAWING IS NOT TO FULL SCALE

PROJECT NO.
400530

10-C-002
SHEET
OF

# COASTAL DEVELOPMENT PERMIT PLANS

FD9000A
D400530
PLOTTED: 7/30/2019 12:28 PM FILE: C:\pw_working\bvw_americas\d0683625\400530-10-C-002.dwg

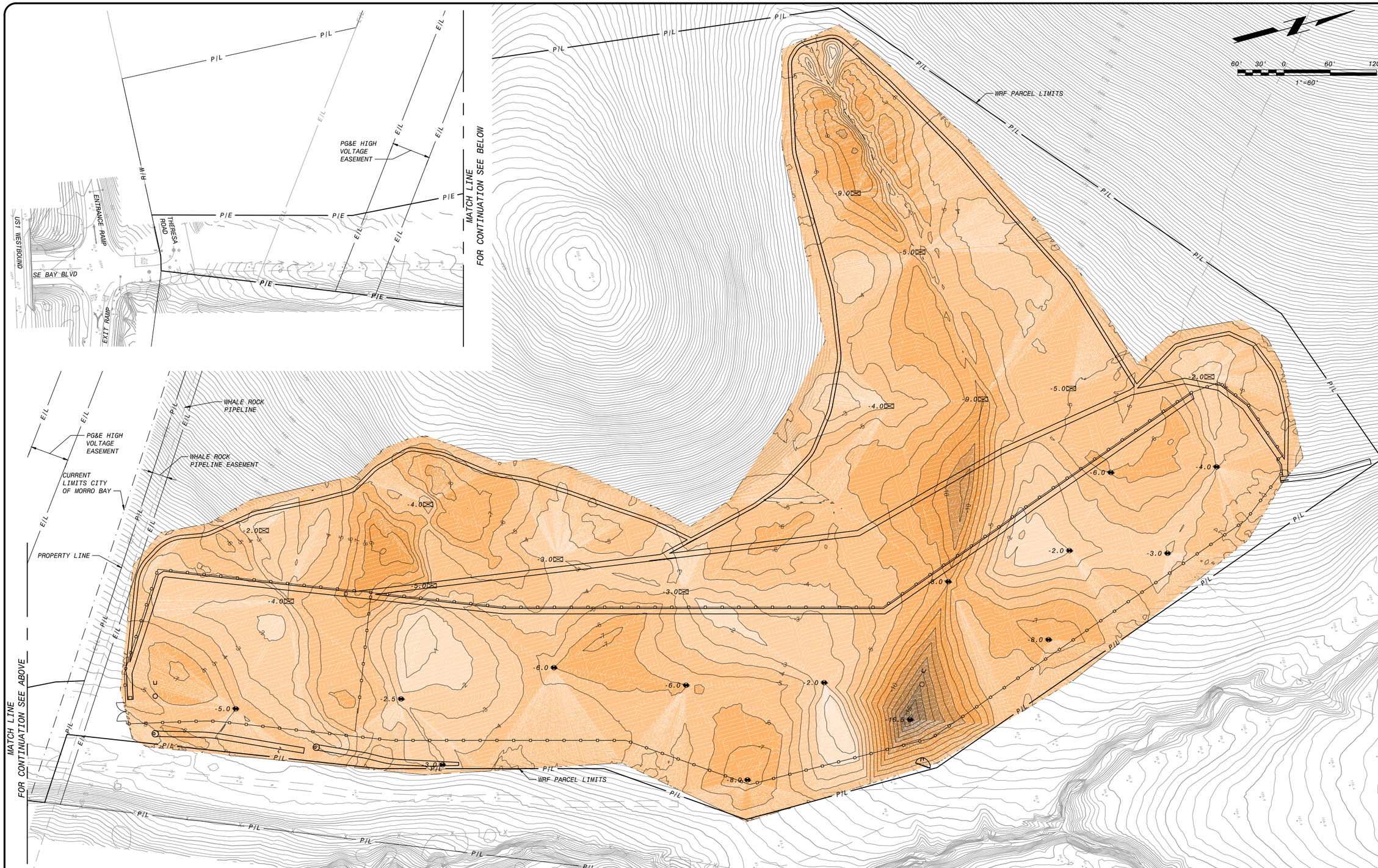


NOTES:

1. THE WRF PLANT AREA GRADE IS SHOWN APPROXIMATELY 1 FT LOWER THAN FINISHED GRADE. THAT GRADE WILL BE FINISHED PER THE GRADING AND PAVING DRAWINGS. ALL OTHER GRADES ON THIS DRAWING ARE FINISHED GRADES.
2. THE TOP OF THE HILLSIDE FILL AREA IS SHOWN FOR BALANCED SITE. THIS AREA CAN BE LOWERED OR RAISED AS NEEDED TO ADJUST FINAL FILL QUANTITY. CONSULT WITH ENGINEERING FOR DETAILS.
3. SEE DETAIL SHEETS FOR CONSTRUCTION DETAILS ON SWALES, CULVERTS, CATCH BASINS, INLETS, CONTROL STRUCTURES, HEADWALLS, OUTLETS, AND DISCHARGE LEVEL-SPREADERS.
4. THIS DRAWING SHOWS THE ESTIMATED DEPTH FROM EXISTING GRADE TO BEDROCK BASED ON DEPTH TO BEDROCK DATA FROM THE PRELIMINARY GEOTECHNICAL INVESTIGATION REPORT DATED 7/1/2019. THIS REPRESENTS THE ESTIMATED DEPTH OF CLAY MATERIAL.

# COASTAL DEVELOPMENT PERMIT PLANS

| NO. | BY | CHK | APP |
|---|---|---|---|
| B | EVB | RTB | EVB |

| DATE | REVISIONS AND RECORD OF USE |
|---|---|
| 7/30/2019 | 60% SUBMITTAL |

BLACK & VEATCH

JOINT VENTURE

FILANC

BLACK & VEATCH

CITY OF MORRO BAY
MORRO BAY WATER
RECLAMATION FACILITY (WRF)

SITE - OVERALL
CIVIL
DEPTH FROM EXISTING GRADE TO BEDROCK

DESIGNED: EVB
DETAILED: SMM
CHECKED:
APPROVED:
DATE:

0 1/2 1
IF THIS BAR DOES NOT MEASURE 1" THEN DRAWING IS NOT TO FULL SCALE

PROJECT NO.
400530

10-C-003
SHEET
OF

FD9000A
D400530
PLOTTED: 7/30/2019 12:30 PM FILE: C:\pw_working\bvw_americas\d0683625\400530-10-C-003.dwg

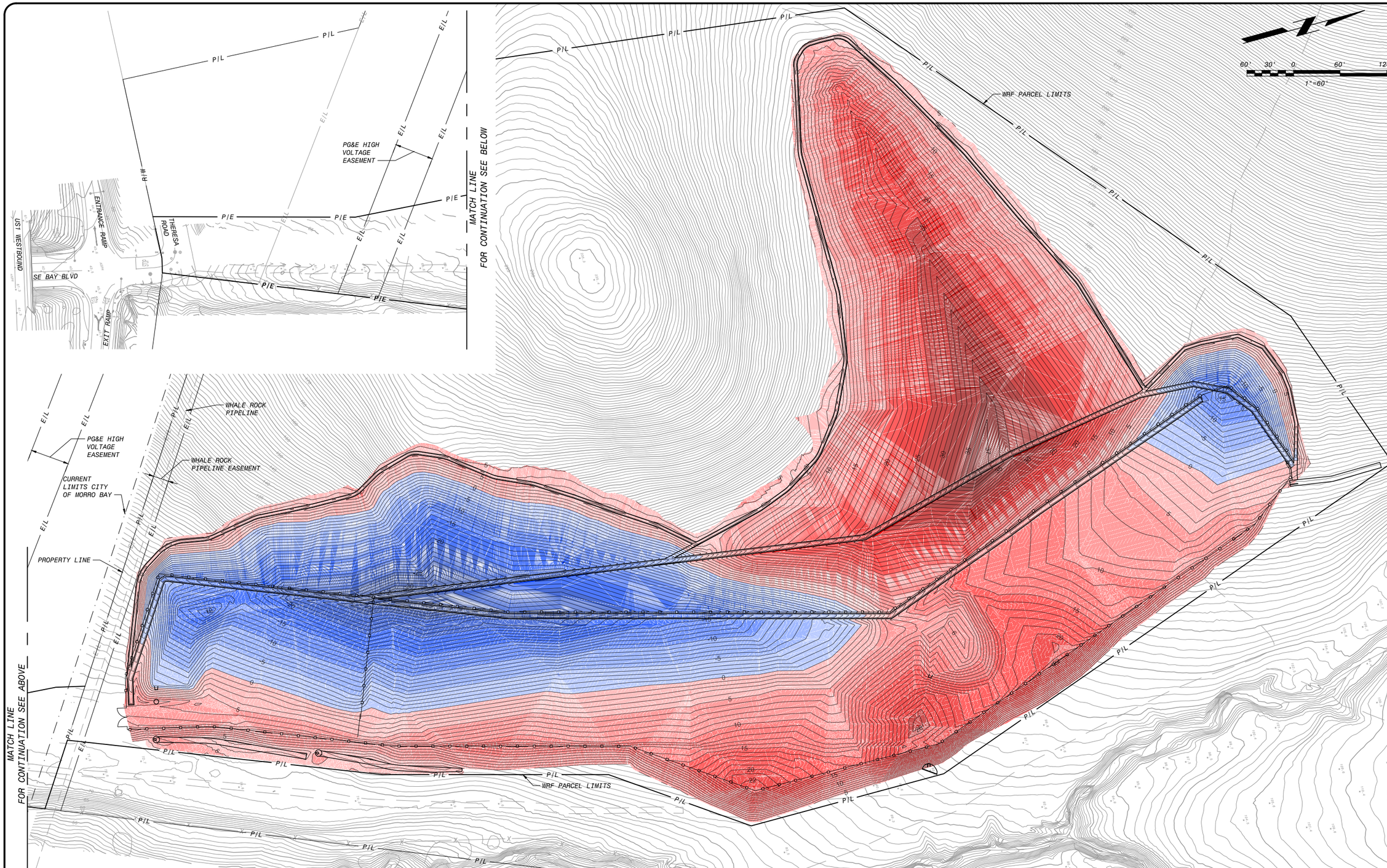


NOTES:

1. THE WRF PLANT AREA GRADE IS SHOWN APPROXIMATELY 1 FT LOWER THAN FINISHED GRADE. THAT GRADE WILL BE FINISHED PER THE GRADING AND PAVING DRAWINGS. ALL OTHER GRADES ON THIS DRAWING ARE FINISHED GRADES.

2. THE TOP OF THE HILLSIDE FILL AREA IS SHOWN FOR BALANCED SITE. THIS AREA CAN BE LOWERED OR RAISED AS NEEDED TO ADJUST FINAL FILL QUANTITY. CONSULT WITH ENGINEERING FOR DETAILS.

3. SEE DETAIL SHEETS FOR CONSTRUCTION DETAILS ON SWALES, CULVERTS, CATCH BASINS, INLETS, CONTROL STRUCTURES, HEADWALLS, OUTLETS, AND DISCHARGE LEVEL-SPREADERS.

4. THIS DRAWING SHOWS THE ESTIMATED DEPTH FROM SITE PREPARATION GRADE TO BEDROCK BASED ON DEPTH TO BEDROCK DATA FROM THE PRELIMINARY GEOTECHNICAL INVESTIGATION REPORT DATED 7/1/2019. POSITIVE VALVES IN RED AREAS INDICATE AREAS OF FILL OVER BEDROCK. NEGATIVE VALUES IN BLUE AREAS INDICATE AREAS OF CUT INTO BEDROCK.

# COASTAL DEVELOPMENT PERMIT PLANS

| NO. | BY | CHK | APP |
|---|---|---|---|
| B | EVB | RTB | EVB |

| DATE | REVISIONS AND RECORD OF USE |
|---|---|
| 7/30/2019 | 60% SUBMITTAL |

BLACK & VEATCH
JOINT VENTURE
FILANC
BLACK & VEATCH

CITY OF MORRO BAY
MORRO BAY WATER
RECLAMATION FACILITY (WRF)

SITE - OVERALL
CIVIL
DEPTH FROM SITE PREP GRADE TO BEDROCK

DESIGNED: EVB
DETAILED: SMM
CHECKED:
APPROVED:
DATE:

0 1/2 1
IF THIS BAR DOES NOT MEASURE 1" THEN DRAWING IS NOT TO FULL SCALE

PROJECT NO.
400530

10-C-004
SHEET
OF

F09000A
D400330
PLOTTED: 7/30/2019 12:31 PM FILE: C:\pw_working\bvw_americas\d0683625\400530-10-C-004.dwg

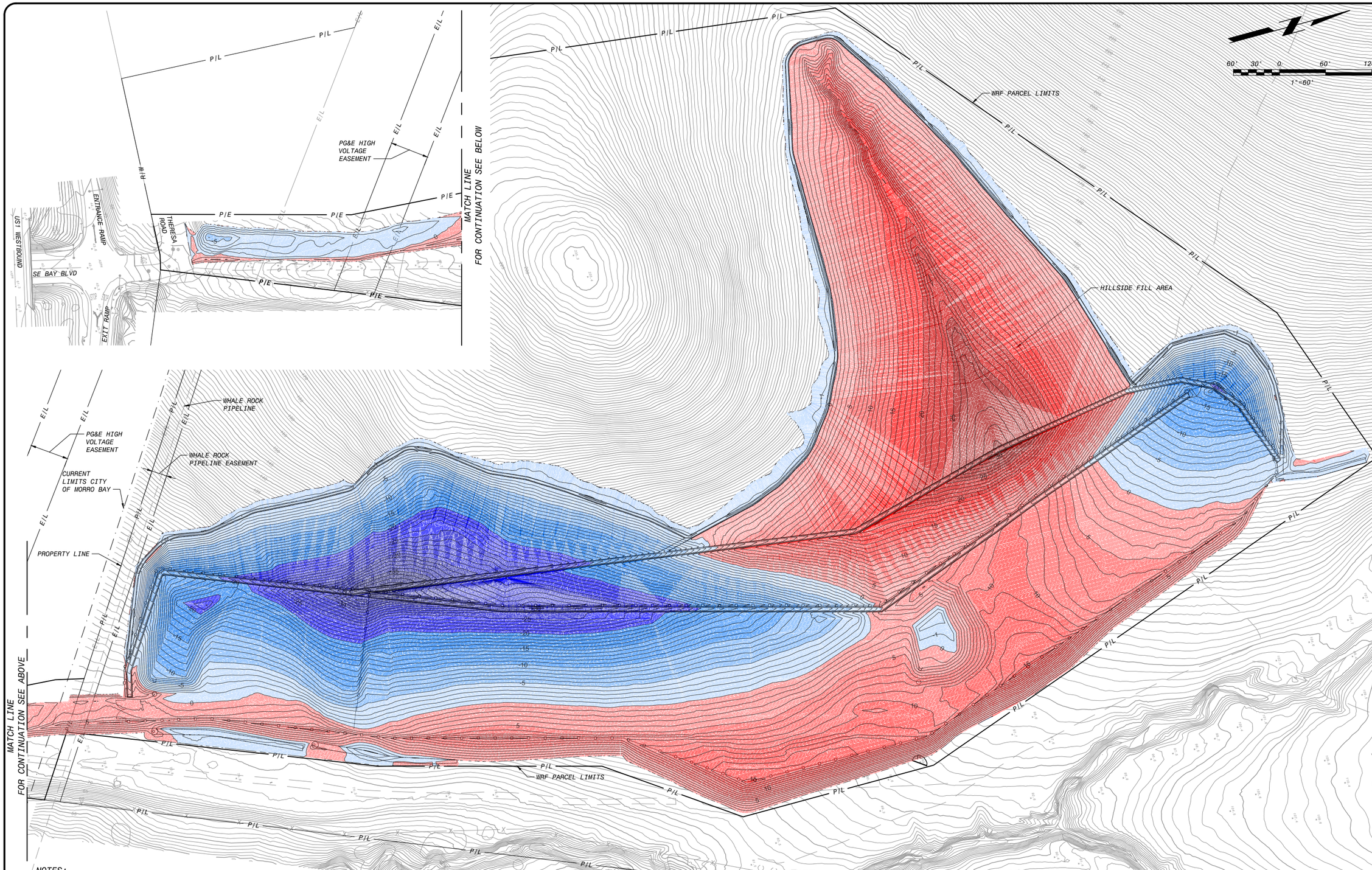


NOTES:

1. THE WRF PLANT AREA GRADE IS SHOWN APPROXIMATELY 1 FT LOWER THAN FINISHED GRADE. THAT GRADE WILL BE FINISHED PER THE GRADING AND PAVING DRAWINGS. ALL OTHER GRADES ON THIS DRAWING ARE FINISHED GRADES.
2. THE TOP OF THE HILLSIDE FILL AREA IS SHOWN FOR BALANCED SITE. THIS AREA CAN BE LOWERED OR RAISED AS NEEDED TO ADJUST FINAL FILL QUANTITY. CONSULT WITH ENGINEERING FOR DETAILS.
3. SEE DETAIL SHEETS FOR CONSTRUCTION DETAILS ON SWALES, CULVERTS, CATCH BASINS, INLETS, CONTROL STRUCTURES, HEADWALLS, OUTLETS, AND DISCHARGE LEVEL-SPREADERS.
4. THIS DRAWING SHOWS THE ESTIMATED DEPTH FROM SITE PREPARATION GRADE TO EXISTING GRADE. POSITIVE VALUES IN RED AREAS INDICATE AREAS OF NET FILL. NEGATIVE VALUES IN BLUE AREAS INDICATE AREAS OF NET CUT.

| DATE | REVISIONS AND RECORD OF USE | NO. | BY | CHK | APP |
|---|---|---|---|---|---|
| 7/30/2019 | 60% SUBMITTAL | B | EVB | RTB | EVB |

BLACK & VEATCH

JOINT VENTURE

FILANC

CITY OF MORRO BAY
MORRO BAY WATER
RECLAMATION FACILITY (WRF)

SITE - OVERALL
CIVIL
DEPTH FROM SITE PREP GRADE TO EXISTING GRADE

DESIGNED: EVB
DETAILED: SMM
CHECKED:
APPROVED:
DATE:

0 1/2 1
IF THIS BAR DOES NOT MEASURE 1" THEN DRAWING IS NOT TO FULL SCALE

PROJECT NO.
400530

10-C-005
SHEET
OF

COASTAL DEVELOPMENT PERMIT PLANS

FD9000A
D400530
PLOTTED: 7/30/2019 12:33 PM FILE: C:\pw_working\bvw_americas\d0683625\400530-10-C-005.dwg

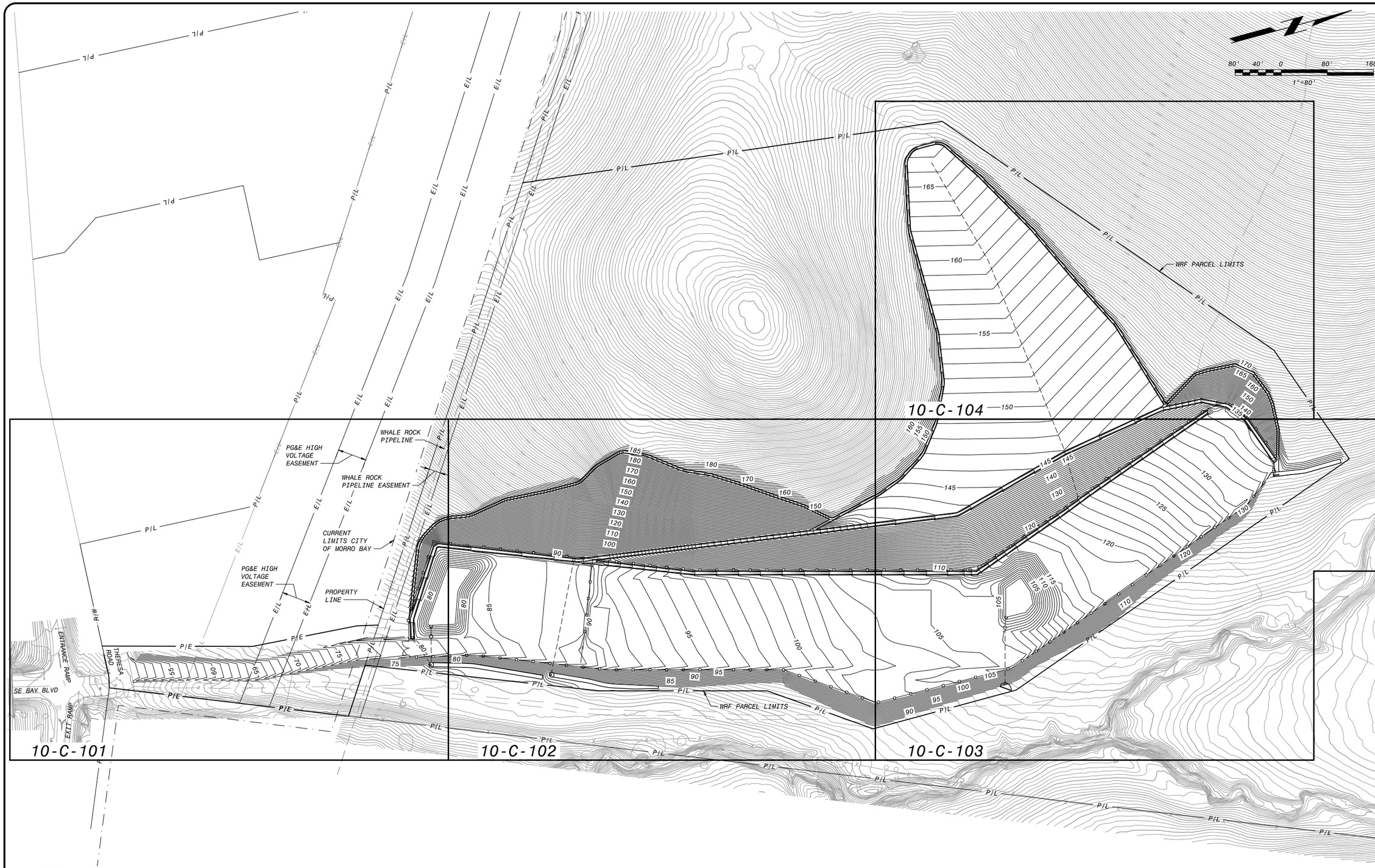


NOTES:

1. THE WRF PLANT AREA GRADE IS SHOWN APPROXIMATELY 1 FT LOWER THAN FINISHED GRADE. THAT GRADE WILL BE FINISHED PER THE GRADING AND PAVING DRAWINGS. ALL OTHER GRADES ON THIS DRAWING ARE FINISHED GRADES.

2. THE TOP OF THE HILLSIDE FILL AREA IS SHOWN FOR BALANCED SITE. THIS AREA CAN BE LOWERED OR RAISED AS NEEDED TO ADJUST FINAL FILL QUANTITY. CONSULT WITH ENGINEERING FOR DETAILS.

3. SEE DETAIL SHEETS FOR CONSTRUCTION DETAILS ON SWALES, CULVERTS, CATCH BASINS, INLETS, CONTROL STRUCTURES, HEADWALLS, OUTLETS, AND DISCHARGE LEVEL-SPREADERS.

COASTAL DEVELOPMENT PERMIT PLANS

| NO. | BY | CHK | APP |
|---|---|---|---|
| B | EVB | RTB | EVB |

| DATE | REVISIONS AND RECORD OF USE |
|---|---|
| 7/30/2019 | 60% SUBMITTAL |

BLACK & VEATCH

JOINT VENTURE

FILANC

BLACK & VEATCH

CITY OF MORRO BAY
MORRO BAY WATER
RECLAMATION FACILITY (WRF)

SITE - OVERALL
CIVIL
SITE PREP GRADING AND DRAINAGE KEY PLAN

DESIGNED: EVB
DETAILED: SMM
CHECKED:
APPROVED:
DATE:

0 1/2 1
IF THIS BAR DOES NOT MEASURE 1" THEN DRAWING IS NOT TO FULL SCALE

PROJECT NO.
400530

10-C-006
SHEET
OF

FD9000A
D400530
PLOTTED: 7/30/2019 12:34 PM FILE: C:\pw_working\bvw_americas\d0683625\400530-10-C-006.dwg

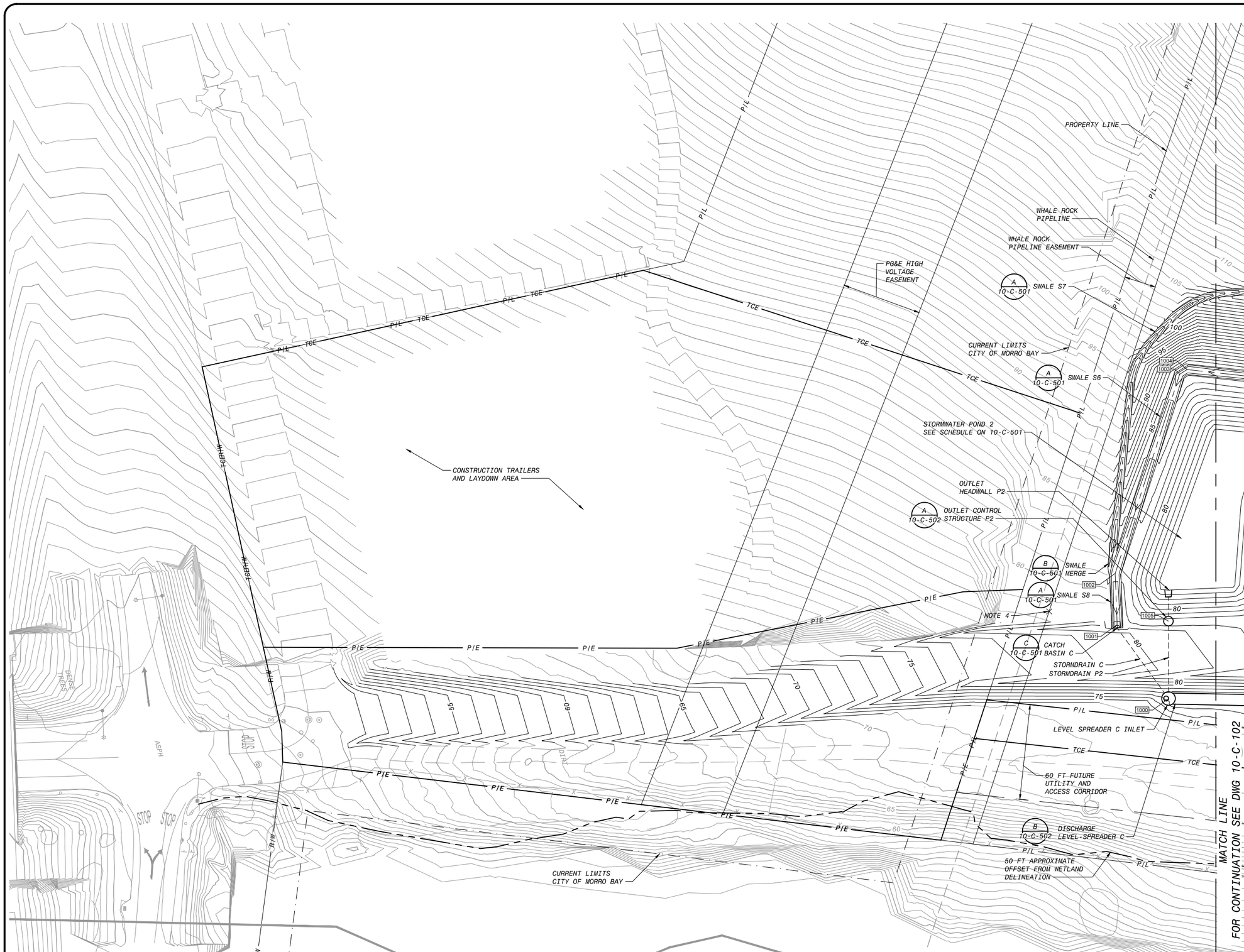


NOTES:

1. THE WRF PLANT AREA GRADE IS SHOWN APPROXIMATELY 1 FT LOWER THAN FINISHED GRADE. THAT GRADE WILL BE FINISHED PER THE GRADING AND PAVING DRAWINGS. ALL OTHER GRADES ON THIS DRAWING ARE FINISHED GRADES.
2. THE TOP OF THE HILLSIDE FILL AREA IS SHOWN FOR BALANCED SITE. THIS AREA CAN BE LOWERED OR RAISED AS NEEDED TO ADJUST FINAL FILL QUANTITY. CONSULT WITH ENGINEERING FOR DETAILS.
3. SEE DETAIL SHEETS FOR CONSTRUCTION DETAILS ON SWALES, CULVERTS, CATCH BASINS, INLETS, CONTROL STRUCTURES, HEADWALLS, OUTLETS, AND DISCHARGE LEVEL-SPREADERS.
4. NOTE NOT USED.
5. FILL ZONES SHALL BE BENCHED INTO BEDROCK AND DRAIN PIPING SHALL BE INSTALLED PER THE REQUIREMENTS IN THE GEOTECHNICAL REPORT.

| NO. | BY | CHK | APP | DATE | REVISIONS AND RECORD OF USE |
|---|---|---|---|---|---|
| B | EVB | RTB | EVB | 7/30/2019 | 60% SUBMITTAL |

BLACK & VEATCH
JOINT VENTURE
FILANC
BLACK & VEATCH

CITY OF MORRO BAY
MORRO BAY WATER
RECLAMATION FACILITY (WRF)

SITE - AREA 1
CIVIL
SITE PREP GRADING AND DRAINAGE PLAN

DESIGNED: EVB
DETAILED: SMM
CHECKED:
APPROVED:
DATE:

0 1/2 1
IF THIS BAR DOES NOT MEASURE 1" THEN DRAWING IS NOT TO FULL SCALE

PROJECT NO.
400530

10-C-101
SHEET
OF

COASTAL DEVELOPMENT PERMIT PLANS

F09000A
D400530
PLOTTED: 7/30/2019 12:58 PM FILE: C:\pw_working\bvw_americas\d0683625\400530-10-C-101-104.dwg

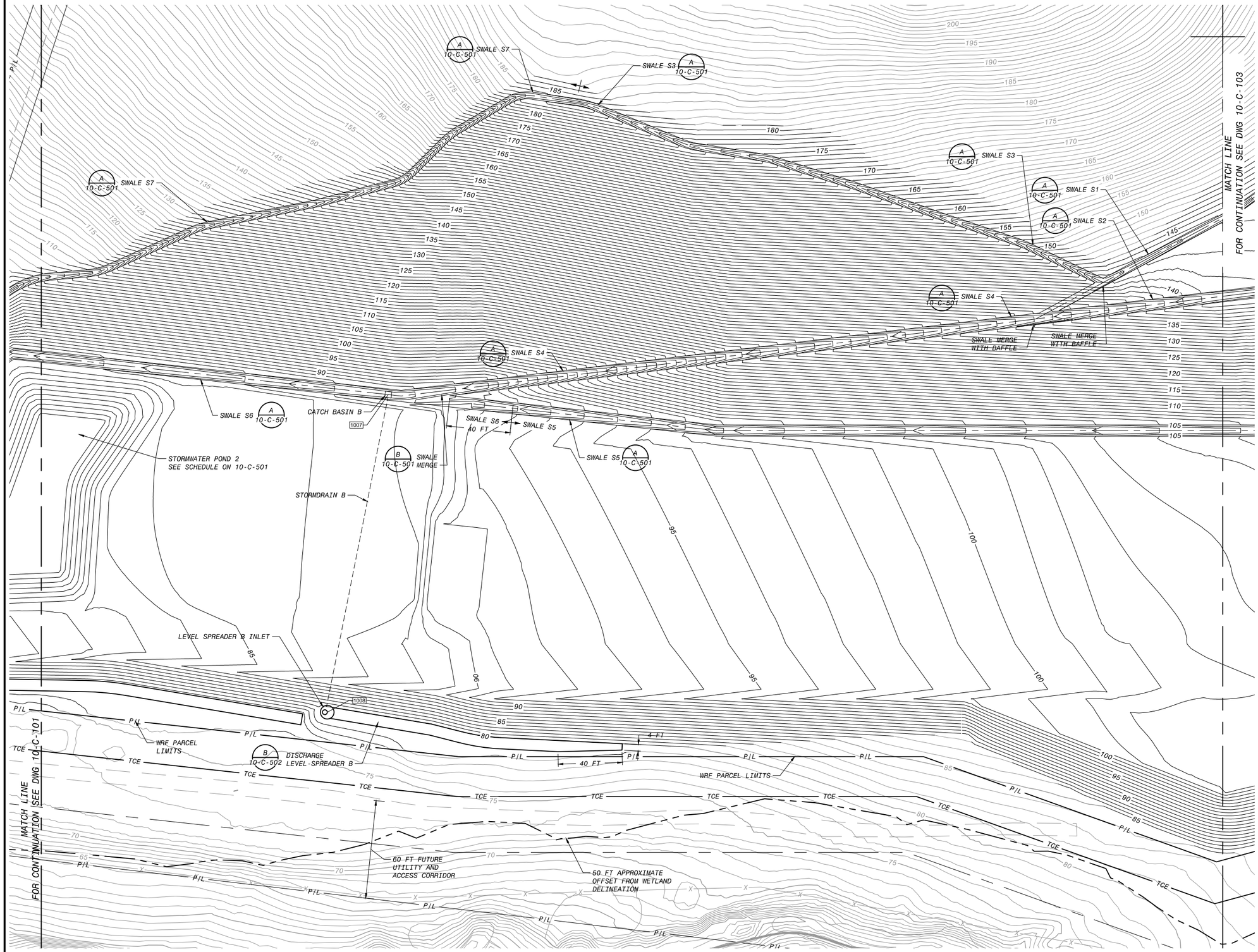


NOTES:

1. THE WRF PLANT AREA GRADE IS SHOWN APPROXIMATELY 1 FT LOWER THAN FINISHED GRADE. THAT GRADE WILL BE FINISHED PER THE GRADING AND PAVING DRAWINGS. ALL OTHER GRADES ON THIS DRAWING ARE FINISHED GRADES.
2. THE TOP OF THE HILLSIDE FILL AREA IS SHOWN FOR BALANCED SITE. THIS AREA CAN BE LOWERED OR RAISED AS NEEDED TO ADJUST FINAL FILL QUANTITY. CONSULT WITH ENGINEERING FOR DETAILS.
3. SEE DETAIL SHEETS FOR CONSTRUCTION DETAILS ON SWALES, CULVERTS, CATCH BASINS, INLETS, CONTROL STRUCTURES, HEADWALLS, OUTLETS, AND DISCHARGE LEVEL-SPREADERS.
4. NOTE NOT USED.
5. FILL ZONES SHALL BE BENCHED INTO BEDROCK AND DRAIN PIPING SHALL BE INSTALLED PER THE REQUIREMENTS IN THE GEOTECHNICAL REPORT.

| NO. | BY | CHK | APP | DATE | REVISIONS AND RECORD OF USE |
|---|---|---|---|---|---|
| B | EVB | RTB | EVB | 7/30/2019 | 60% SUBMITTAL |

BLACK & VEATCH
JOINT VENTURE
FILANC
BLACK & VEATCH

CITY OF MORRO BAY
MORRO BAY WATER
RECLAMATION FACILITY (WRF)

SITE - AREA 2
CIVIL
SITE PREP GRADING DRAINAGE PLAN

DESIGNED: EVB
DETAILED: SMM
CHECKED:
APPROVED:
DATE:

0 1/2 1
IF THIS BAR DOES NOT MEASURE 1" THEN DRAWING IS NOT TO FULL SCALE

PROJECT NO.
400530

10-C-102
SHEET
OF

COASTAL DEVELOPMENT PERMIT PLANS

FD9000A
D400530
PLOTTED: 7/30/2019 1:00 PM FILE: C:\pw_working\bvw_americas\d0683625\400530-10-C-101-104.dwg

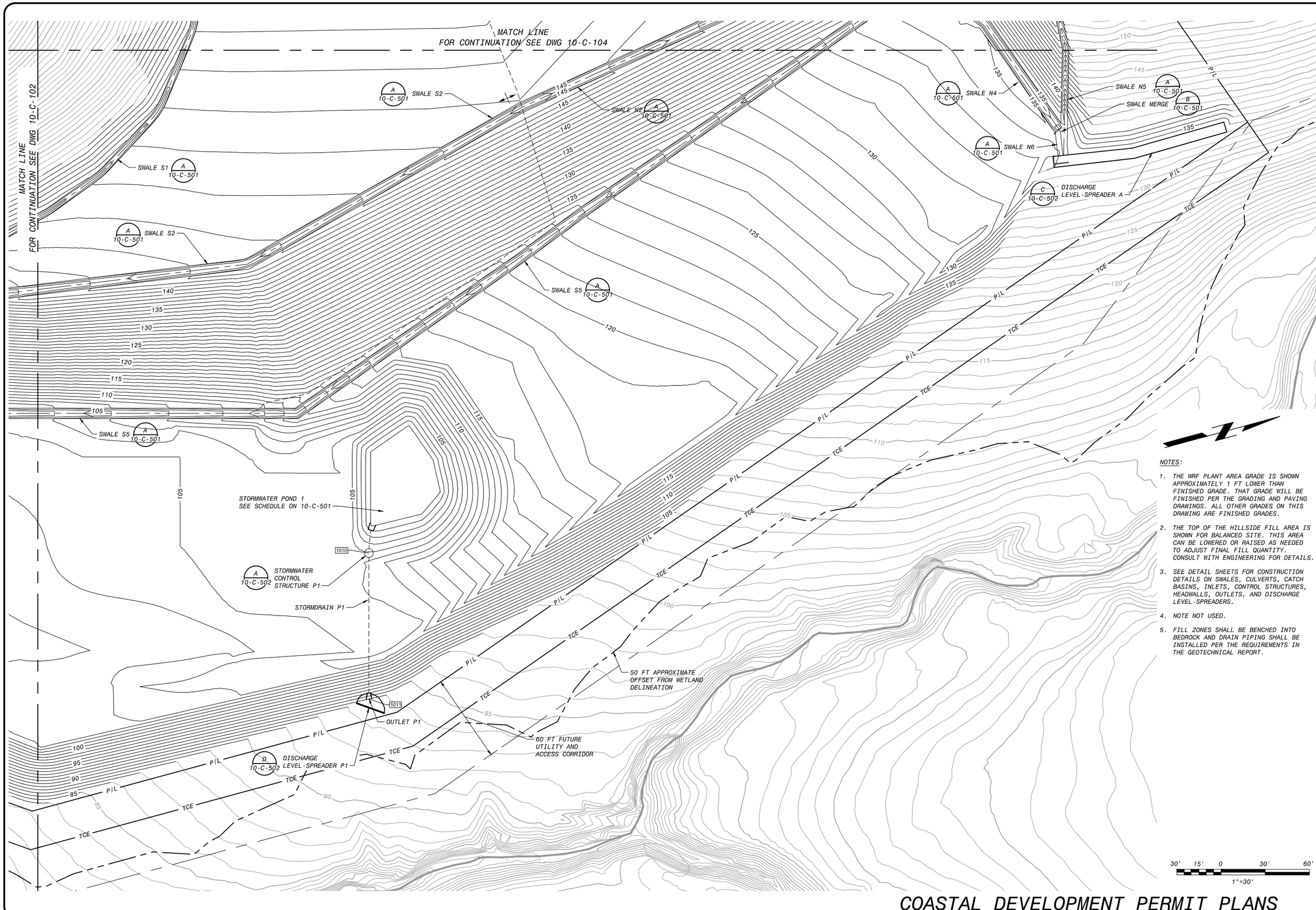


NOTES:

1. THE WRF PLANT AREA GRADE IS SHOWN APPROXIMATELY 1 FT LOWER THAN FINISHED GRADE. THAT GRADE WILL BE FINISHED PER THE GRADING AND PAVING DRAWINGS. ALL OTHER GRADES ON THIS DRAWING ARE FINISHED GRADES.
2. THE TOP OF THE HILLSIDE FILL AREA IS SHOWN FOR BALANCED SITE. THIS AREA CAN BE LOWERED OR RAISED AS NEEDED TO ADJUST FINAL FILL QUANTITY. CONSULT WITH ENGINEERING FOR DETAILS.
3. SEE DETAIL SHEETS FOR CONSTRUCTION DETAILS ON SWALES, CULVERTS, CATCH BASINS, INLETS, CONTROL STRUCTURES, HEADWALLS, OUTLETS, AND DISCHARGE LEVEL-SPREADERS.
4. NOTE NOT USED.
5. FILL ZONES SHALL BE BENCHED INTO BEDROCK AND DRAIN PIPING SHALL BE INSTALLED PER THE REQUIREMENTS IN THE GEOTECHNICAL REPORT.

| DATE | REVISIONS AND RECORD OF USE | NO. | BY | CHK | APP |
|---|---|---|---|---|---|
| 7/30/2019 | 60% SUBMITTAL | B | EVB | RTB | EVB |

BLACK & VEATCH
JOINT VENTURE
FILANC
BLACK & VEATCH

CITY OF MORRO BAY
MORRO BAY WATER RECLAMATION FACILITY (WRF)

SITE - AREA 3
CIVIL
SITE PREP GRADING DRAINAGE PLAN

DESIGNED: EVB
DETAILED: SMM
CHECKED:
APPROVED:
DATE:

0 1/2 1
IF THIS BAR DOES NOT MEASURE 1" THEN DRAWING IS NOT TO FULL SCALE

PROJECT NO. 400530

10-C-103
SHEET
OF

COASTAL DEVELOPMENT PERMIT PLANS

FD8000A
D400530
PLOTTED: 7/30/2019 12:58 PM FILE: C:\pw_working\bvw_americas\d0683625\400530-10-C-101-104.dwg

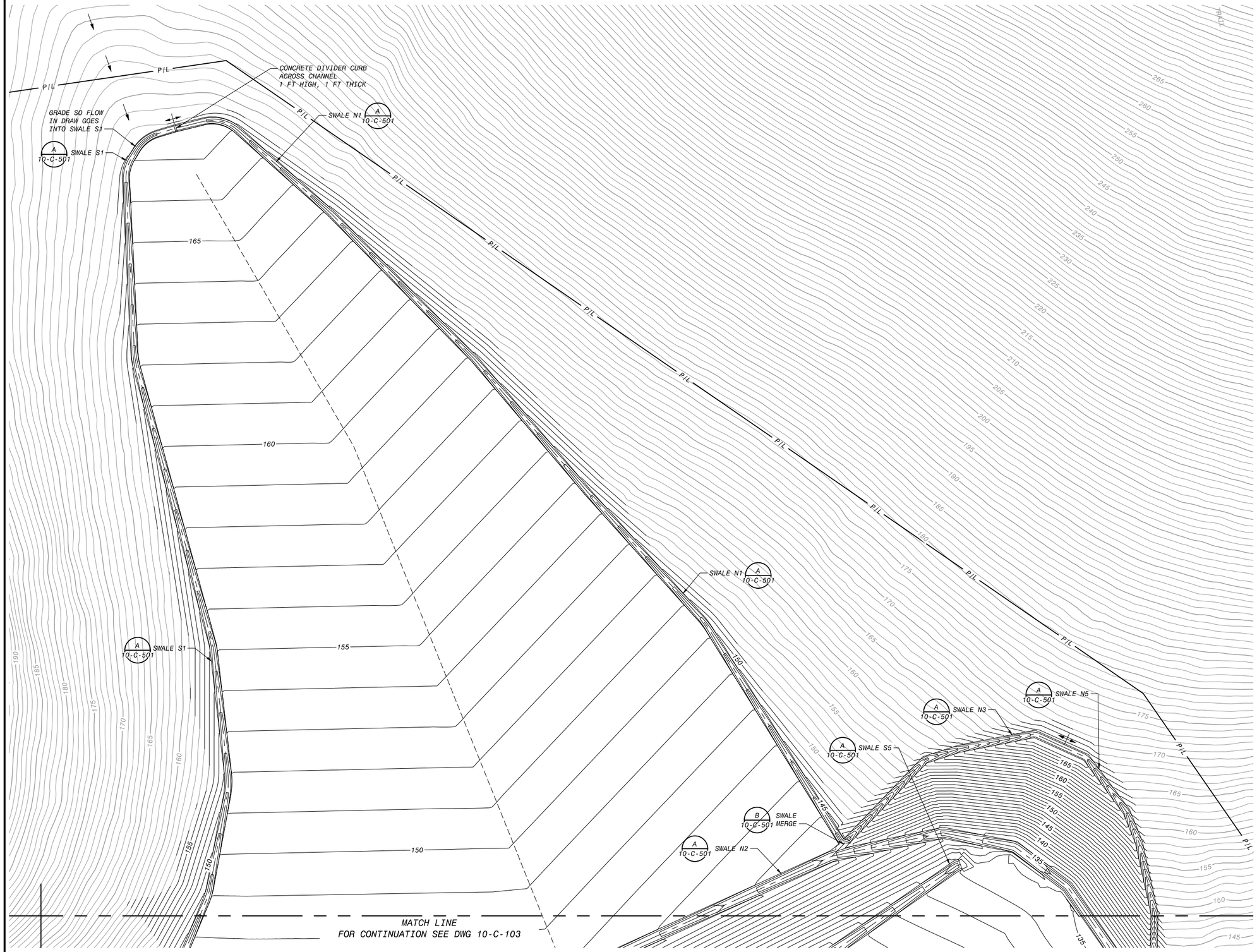


NOTES:

1. THE WRF PLANT AREA GRADE IS SHOWN APPROXIMATELY 1 FT LOWER THAN FINISHED GRADE. THAT GRADE WILL BE FINISHED PER THE GRADING AND PAVING DRAWINGS. ALL OTHER GRADES ON THIS DRAWING ARE FINISHED GRADES.
2. THE TOP OF THE HILLSIDE FILL AREA IS SHOWN FOR BALANCED SITE. THIS AREA CAN BE LOWERED OR RAISED AS NEEDED TO ADJUST FINAL FILL QUANTITY. CONSULT WITH ENGINEERING FOR DETAILS.
3. SEE DETAIL SHEETS FOR CONSTRUCTION DETAILS ON SWALES, CULVERTS, CATCH BASINS, INLETS, CONTROL STRUCTURES, HEADWALLS, OUTLETS, AND DISCHARGE LEVEL-SPREADERS.
4. NOTE NOT USED.
5. FILL ZONES SHALL BE BENCHED INTO BEDROCK AND DRAIN PIPING SHALL BE INSTALLED PER THE REQUIREMENTS IN THE GEOTECHNICAL REPORT.

30' 15' 0 30' 60'
1"=30'

| NO. | BY | CHK | APP | DATE | REVISIONS AND RECORD OF USE |
|---|---|---|---|---|---|
| B | EVB | RTB | EVB | 7/30/2019 | 60% SUBMITTAL |

BLACK & VEATCH
JOINT VENTURE
FILANC
BLACK & VEATCH

CITY OF MORRO BAY
MORRO BAY WATER
RECLAMATION FACILITY (WRF)

SITE - AREA 4
CIVIL
SITE PREP GRADING DRAINAGE PLAN

DESIGNED: EVB
DETAILED: SMM
CHECKED:
APPROVED:
DATE:

0 1/2 1
IF THIS BAR DOES NOT MEASURE 1" THEN DRAWING IS NOT TO FULL SCALE

PROJECT NO.
400530

10-C-104
SHEET
OF

COASTAL DEVELOPMENT PERMIT PLANS

F090000A
D400530
PLOTTED: 7/30/2019 12:59 PM FILE: C:\pw_working\bvw_americas\00683625\400530-10-C-101-104.dwg

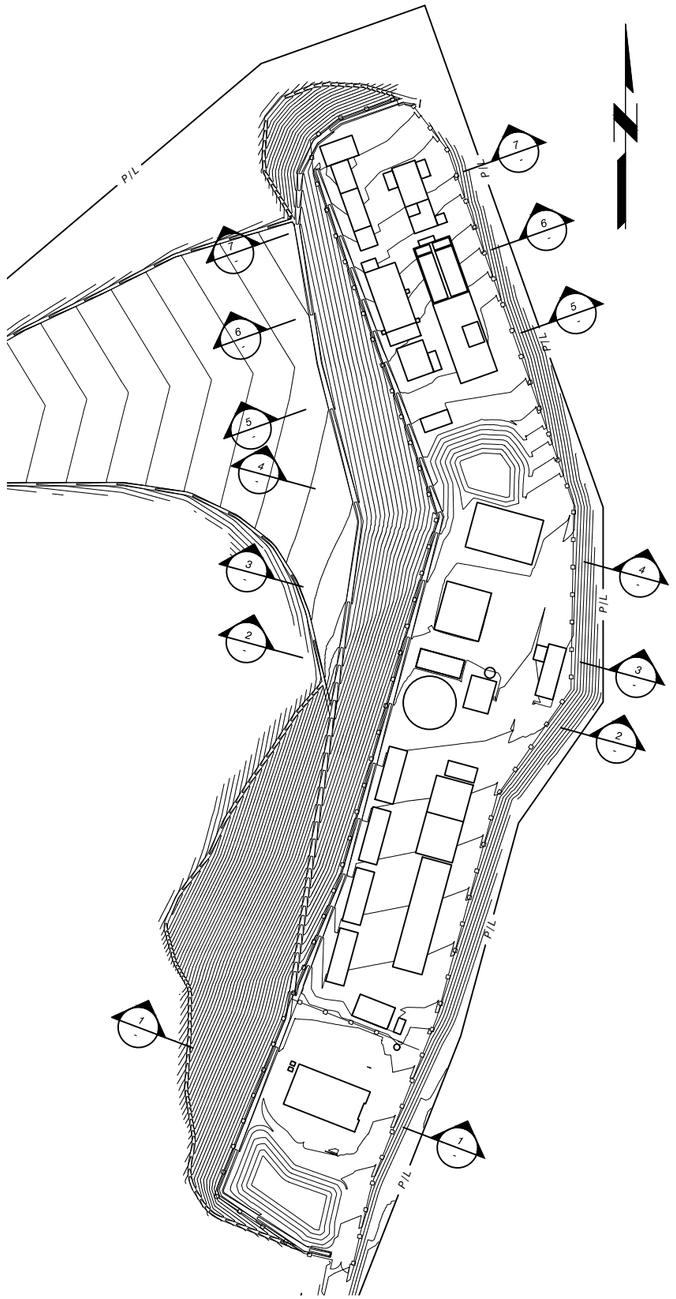


SECTION KEY PLAN
SCALE 1"=100'

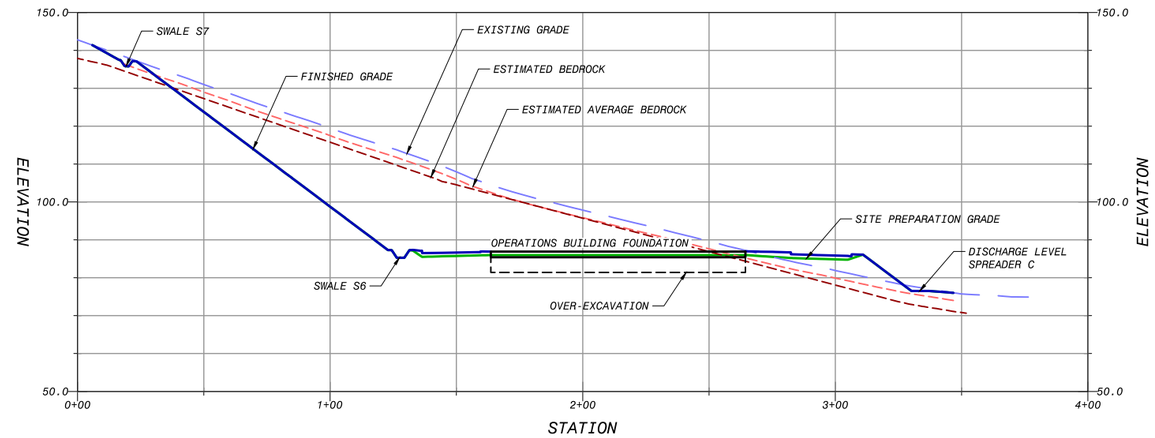


1 OPERATIONS BULDING
SCALE: HORIZ 1"=30'
VERT 1"=20'

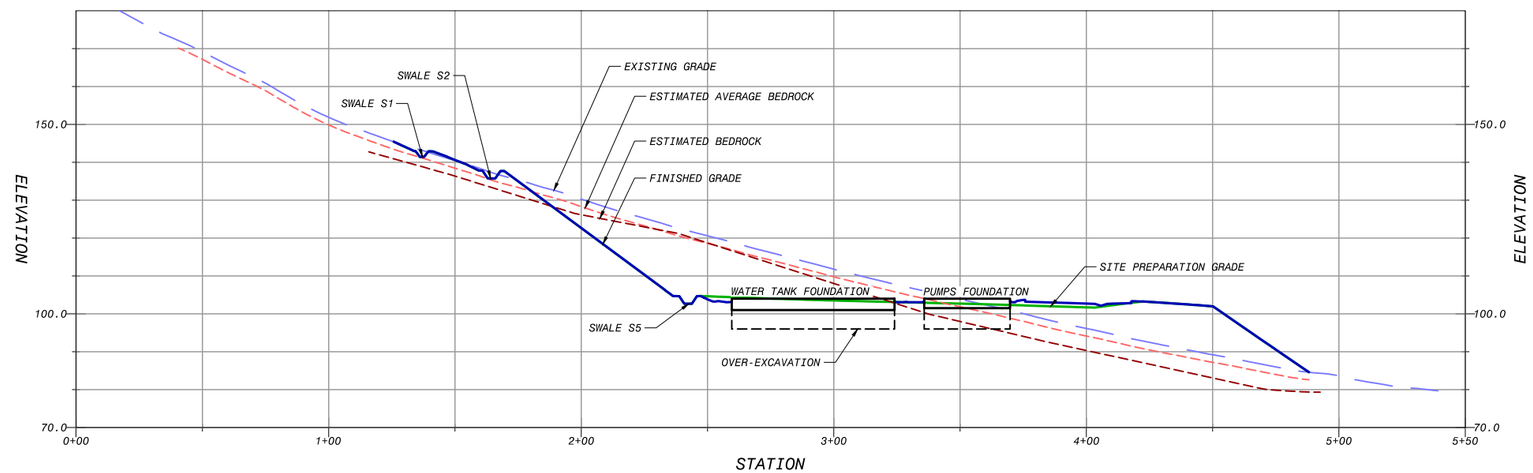


2 PRODUCT WATER TANK AND PUMPS
SCALE: HORIZ 1"=30'
VERT 1"=20'

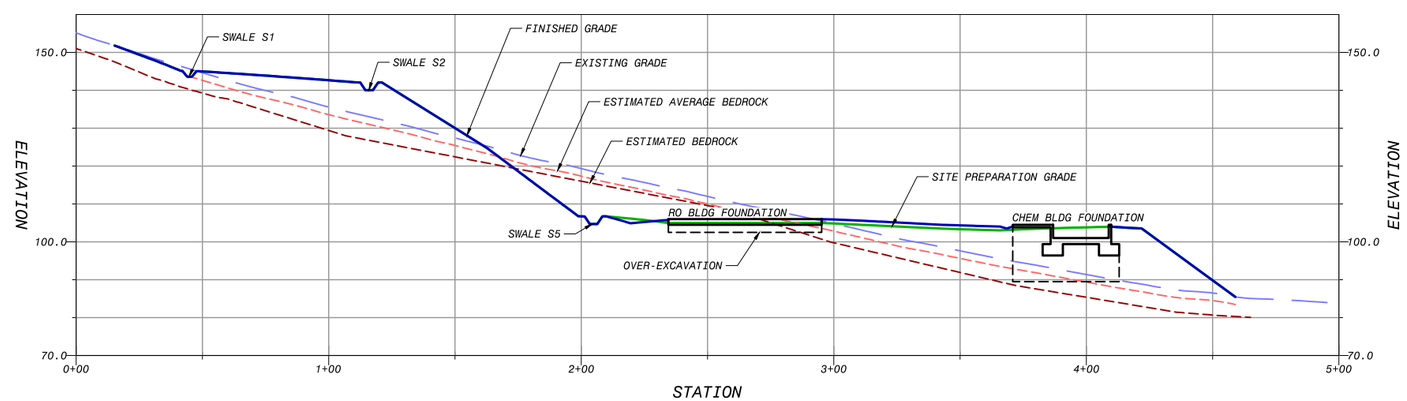


3 CHEMICAL FACILITY AND RO/UV BUILDING
SCALE: HORIZ 1"=30'
VERT 1"=20'

NOTES:

1. THE WRF PLANT AREA GRADE IS SHOWN APPROXIMATELY 1 FT LOWER THAN FINISHED GRADE. THAT GRADE WILL BE FINISHED PER THE GRADING AND PAVING DRAWINGS. ALL OTHER GRADES ON THIS DRAWING ARE FINISHED GRADES.
2. THE TOP OF THE HILLSIDE FILL AREA IS SHOWN FOR BALANCED SITE. THIS AREA CAN BE LOWERED OR RAISED AS NEEDED TO ADJUST FINAL FILL QUANTITY. CONSULT WITH ENGINEERING FOR DETAILS.
3. SEE DETAIL SHEETS FOR CONSTRUCTION DETAILS ON SWALES, CULVERTS, CATCH BASINS, INLETS, CONTROL STRUCTURES, HEADWALLS, OUTLETS, AND DISCHARGE LEVEL-SPREADERS.
4. THIS DRAWING SHOWS THE ESTIMATED BEDROCK LEVEL AND ARITHMETIC AVERAGE BEDROCK LEVEL BASED ON DEPTH TO BEDROCK DATA FROM THE PRELIMINARY GEOTECHNICAL INVESTIGATION REPORT DATED 7/1/2019.

LEGEND

- EXISTING GRADE
- ESTIMATED BEDROCK
- AVERAGE ESTIMATED BEDROCK
- FINISHED GRADE
- SITE PREPARATION GRADE
- OVER-EXCAVATION UNDER STRUCTURES

# COASTAL DEVELOPMENT PERMIT PLANS

| NO. | BY | CHK | APP | DATE | REVISIONS AND RECORD OF USE |
|---|---|---|---|---|---|
| B | EVB | RTB | EVB | 7/30/2019 | 60% SUBMITTAL |

BLACK & VEATCH
JOINT VENTURE
FILANC
BLACK & VEATCH

CITY OF MORRO BAY
MORRO BAY WATER
RECLAMATION FACILITY (WRF)

SITE - OVERALL
CIVIL
SITE PREP SECTIONS 1

DESIGNED: EVB
DETAILED: SMM
CHECKED:
APPROVED:
DATE:

0 1/2 1
IF THIS BAR DOES NOT MEASURE 1" THEN DRAWING IS NOT TO FULL SCALE

PROJECT NO.
400530

10-C-301
SHEET
OF

FD9000A
D400530
PLOTTED: 7/30/2019 1:01 PM FILE: C:\pw_working\bvw_americas\d0683625\400530-10-C-301.dwg

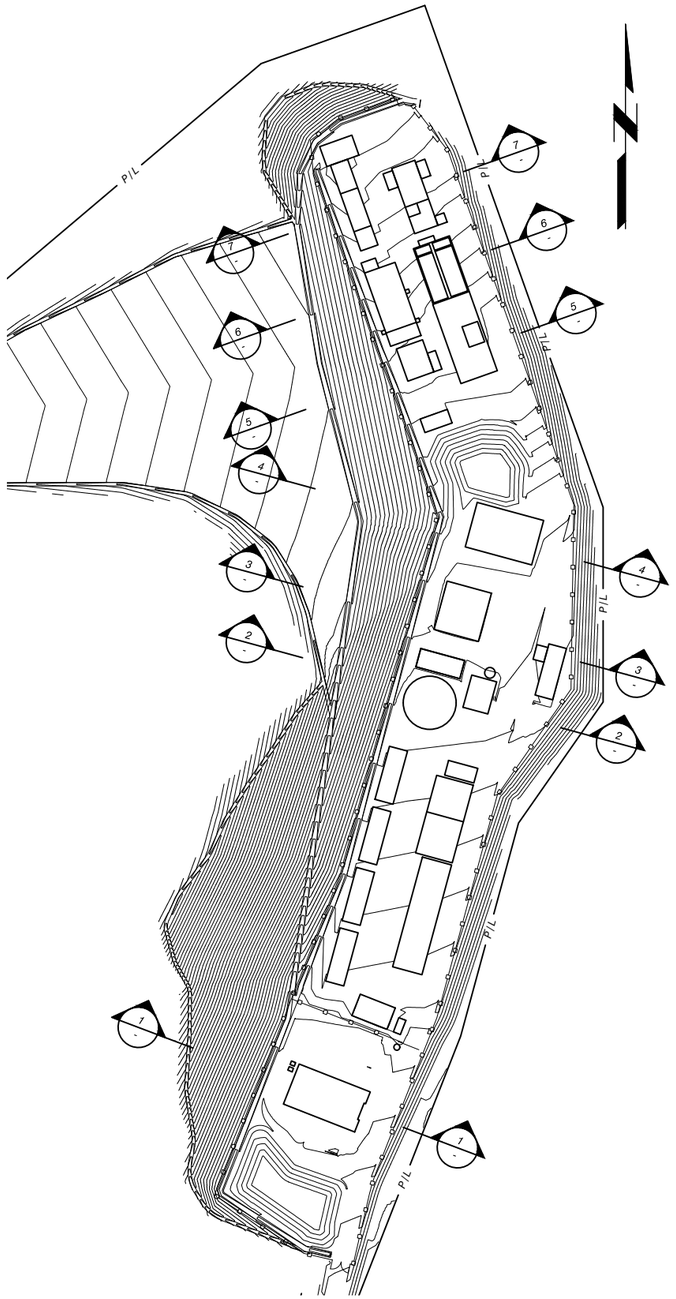


SECTION KEY PLAN
SCALE 1"=100'

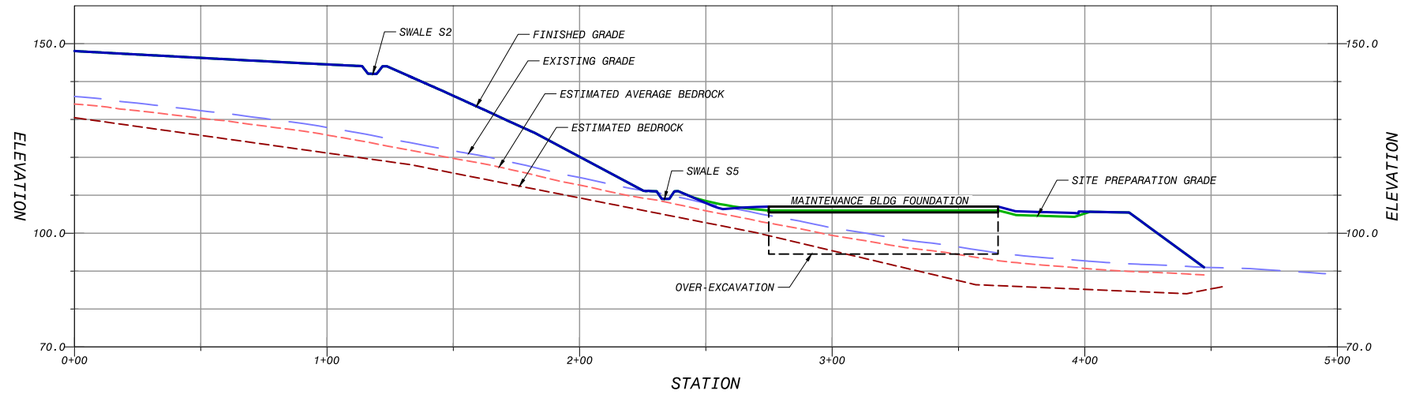


4 MAINTENANCE BULDING
SCALE: HORIZ 1"=30'
VERT 1"=20'

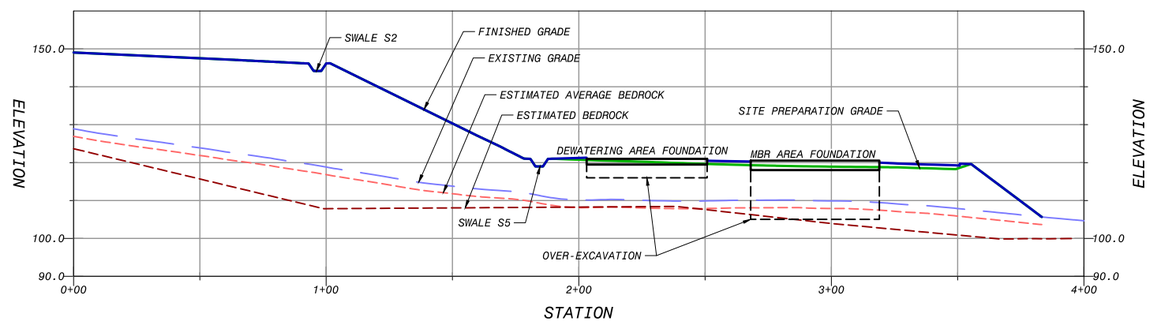


5 MBR AND DEWATERING
SCALE: HORIZ 1"=30'
VERT 1"=20'

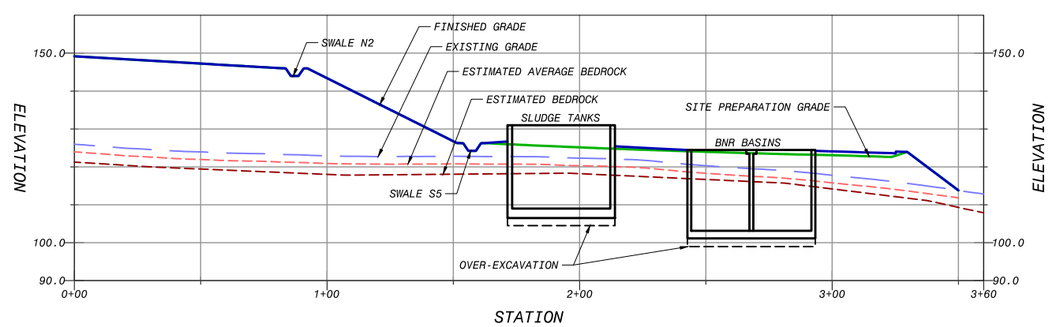


6 BNR AND SLUDGE HOLDING TANKS
SCALE: HORIZ 1"=30'
VERT 1"=20'

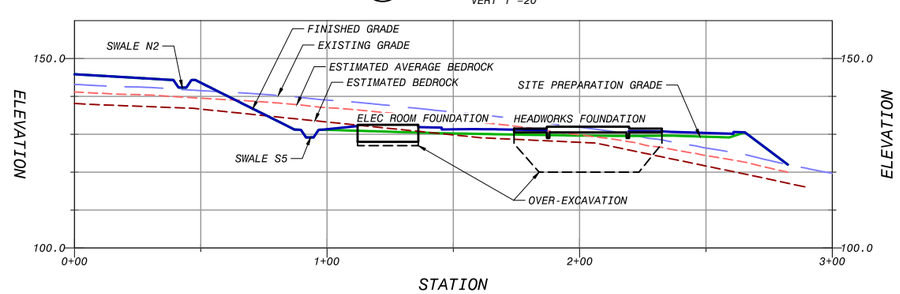


6 HEADWORKS AND ELECTRICAL BUILDING
SCALE: HORIZ 1"=30'
VERT 1"=20'

NOTES:

1. THE WRF PLANT AREA GRADE IS SHOWN APPROXIMATELY 1 FT LOWER THAN FINISHED GRADE. THAT GRADE WILL BE FINISHED PER THE GRADING AND PAVING DRAWINGS. ALL OTHER GRADES ON THIS DRAWING ARE FINISHED GRADES.
2. THE TOP OF THE HILLSIDE FILL AREA IS SHOWN FOR BALANCED SITE. THIS AREA CAN BE LOWERED OR RAISED AS NEEDED TO ADJUST FINAL FILL QUANTITY. CONSULT WITH ENGINEERING FOR DETAILS.
3. SEE DETAIL SHEETS FOR CONSTRUCTION DETAILS ON SWALES, CULVERTS, CATCH BASINS, INLETS, CONTROL STRUCTURES, HEADWALLS, OUTLETS, AND DISCHARGE LEVEL-SPREADERS.
4. THIS DRAWING SHOWS THE ESTIMATED BEDROCK LEVEL AND ARITHMETIC AVERAGE BEDROCK LEVEL BASED ON DEPTH TO BEDROCK DATA FROM THE PRELIMINARY GEOTECHNICAL INVESTIGATION REPORT DATED 7/1/2019.

LEGEND

- EXISTING GRADE
- ESTIMATED BEDROCK
- AVERAGE ESTIMATED BEDROCK
- FINISHED GRADE
- SITE PREPARATION GRADE
- OVER-EXCAVATION UNDER STRUCTURES

COASTAL DEVELOPMENT PERMIT PLANS

| NO. | BY | CHK | APD | DATE | REVISIONS AND RECORD OF USE |
|---|---|---|---|---|---|
| B | EVB | RTB | EVB | 7/30/2019 | 60% SUBMITTAL |

BLACK & VEATCH
JOINT VENTURE
FILANC
BLACK & VEATCH

CITY OF MORRO BAY
MORRO BAY WATER
RECLAMATION FACILITY (WRF)

SITE - OVERALL
CIVIL
SITE PREP SECTIONS 2

DESIGNED: EVB
DETAILED: SMM
CHECKED:
APPROVED:
DATE:

0 1/2 1
IF THIS BAR DOES NOT MEASURE 1" THEN DRAWING IS NOT TO FULL SCALE

PROJECT NO.
400530

10-C-302
SHEET
OF

FD9000A
D400530
PLOTTED: 7/30/2019 1:02 PM FILE: C:\pw_working\bvw_americas\d0683625\400530-10-C-302.dwg

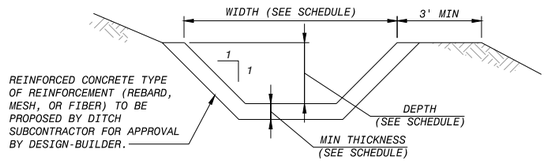


| SWALE SCHEDULE | | | | |
|---|---|---|---|---|
| SWALE | WIDTH | DEPTH | MIN THICKNESS | NOTES |
| N1 | 7' | 2' | 3" | |
| N2 | 7' | 2' | 3" | |
| N3 | 3' | 1' | 3" | |
| N4 | 7' | 2' | 3" | |
| N5 | 3' | 1' | 3" | |
| N6 | 7' | 2' | 3" | |
| S1 | 7' | 2' | 3" | |
| S2 | 7' | 2' | 3" | |
| S3 | 3' | 1' | 3" | |
| S4 | 7' | 2' | 3" | |
| S5 | 7' | 2' | 3" | PERMISSIBLE TO SUBSTITUTE CONCRETE LINING WITH CLASS I RIP-RAP (NOTE 1) |
| S6 | 7' | 2' | 3" | |
| S7 | 3' | 1' | 3" | |
| S8 | 7' | 2' | 3" | |

A / - SWALE SECTION
NO SCALE

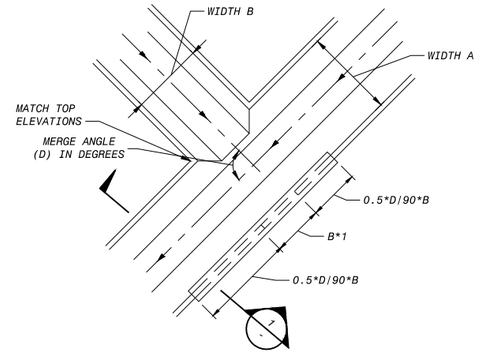


PLAN

B / - SWALE MERGE
NO SCALE

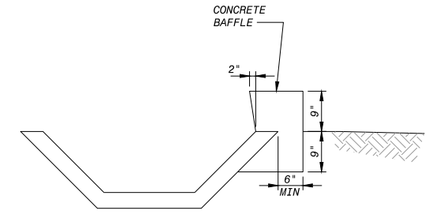


BAFFLE SECTION

1 / - SECTION
NO SCALE

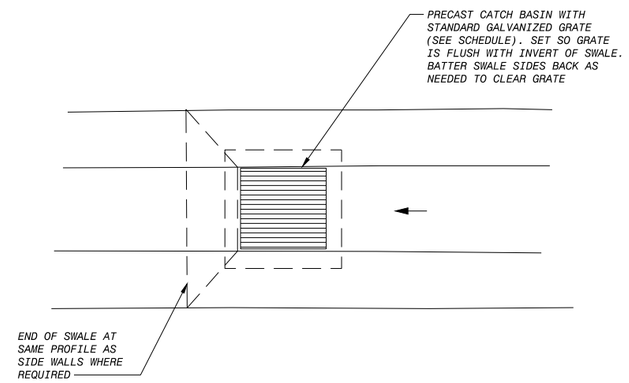


| STORM DRAIN SCHEDULE | | | | | |
|---|---|---|---|---|---|
| SD | SIZE | MATERIAL | INLET INV | OUTLET INV | LENGTH |
| P1 | 18" | C-900 PVC | 101.00' | 92.00' | 103' |
| B | 24" | C-900 PVC | 80.67' | 78.50' | 197' |
| P2 | 18" | C-900 PVC | 75.50' | 75.00' | 41' |
| C | 24" | C-900 PVC | 75.50' | 75.00' | 51' |

| CATCH BASIN SCHEDULE | | | | | | | | |
|---|---|---|---|---|---|---|---|---|
| | GRATE | | | BOX INTERNAL | | | OUTLET | |
| CATCH BASIN | RIM EL | LENGTH | WIDTH | FLOOR EL | LENGTH | WIDTH | INV | SIZE |
| B | 86.67' | 3' | 3' | 80.67' | 3' | 3' | 80.67' | 24" C-900 PVC |
| C | 81.00' | 3' | 3' | 75.50' | 3' | 3' | 75.50' | 24" C-900 PVC |

C / - SWALE CATCH BASIN
NO SCALE

COASTAL DEVELOPMENT PERMIT PLANS

| NO. | BY | CHK | APP |
|---|---|---|---|
| B | EVB | RTB | EVB |

| DATE | REVISIONS AND RECORD OF USE |
|---|---|
| 7/19/2019 | 60% SUBMITTAL |

BLACK & VEATCH
JOINT VENTURE
FILANC
BLACK & VEATCH

CITY OF MORRO BAY
MORRO BAY WATER
RECLAMATION FACILITY (WRF)

SITE - OVERALL
CIVIL
SITE PREP GRADING AND DRAINAGE DETAILS 1

DESIGNED: EVB
DETAILED: SMM
CHECKED:
APPROVED:
DATE:

0 1/2 1
IF THIS BAR DOES NOT MEASURE 1" THEN DRAWING IS NOT TO FULL SCALE

PROJECT NO.
400530

10-C-501
SHEET
OF

FD7000
D400530

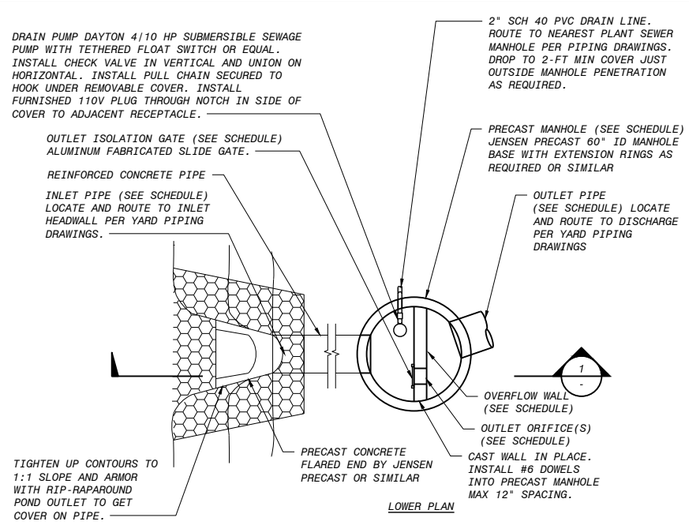


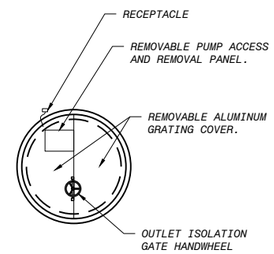


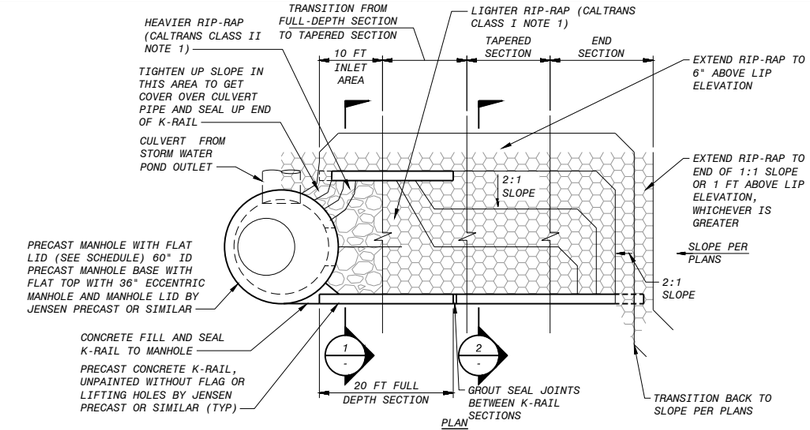


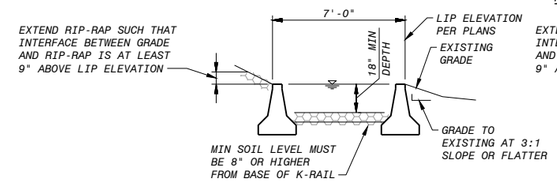


1 - FULL-DEPTH SECTION

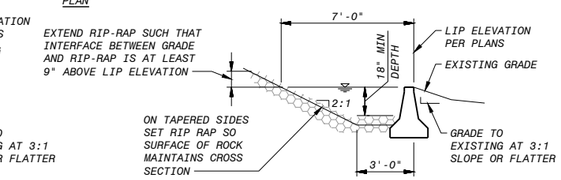


2 - TAPERED SECTION

B - DISCHARGE OUTLET LEVEL-SPREADER

1/4" = 1

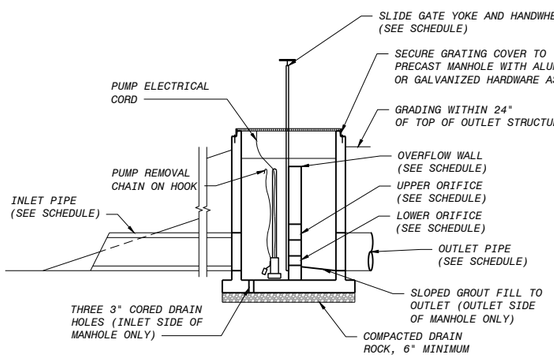


1 - SECTION

1/4" = 1' HORIZ NTS VERT

A - STORM POND OUTLET CONTROL STRUCTURE

1/4" = 1

| STORM POND OUTLET CONTROL STRUCTURE SCHEDULE | | |
|---|---|---|
| | POND 1 (NORTH) | POND 2 (SOUTH) |
| INLET | | |
| SIZE | 18" | 18" |
| MATERIAL | RCP | RCP |
| INLET INV | 101.00' | 75.50' |
| OUTLET INV | 101.00' | 75.50' |
| MANHOLE | | |
| FLOOR EL | 101.00' | 75.50' |
| OVERFLOW EL | 105.00' | 80.70' |
| LID EL | 107.50' | 83.00' |
| PUMP | DAYTON 4/10 HP 70 GPM @ 15' (MODEL 3BB87 OR EQUAL) | N/A |
| LOWER ORIFICE | | |
| SIZE | 4" | 6" |
| INV | 101.50' | 76.00' |
| UPPER ORIFICE | | |
| SIZE | 8" | 10" |
| INV | 102.40' | 77.50' |
| ISOLATION GATE | | |
| INV | 101.50' | 76.00' |
| WIDTH | 12" | 12" |
| LEAF HEIGHT | 30" | 30" |
| YOKE EL | 110.50' | 86.00' |
| LEAF TOP AT OPEN | 106.50' | 81.00' |
| ACTUATOR | HANDWHEEL | |
| MATERIALS | EPOXY-COATED STEEL/CAST IRON WITH ALUMINUM AND/OR SS LEAF AND SCREW. SEAL ALL FOUR SIDES. | |
| OUTLET | | |
| SIZE | 18" | 18" |
| MATERIAL | C-900 PVC | C-900 PVC |
| INV | 101.00' | 75.50' |

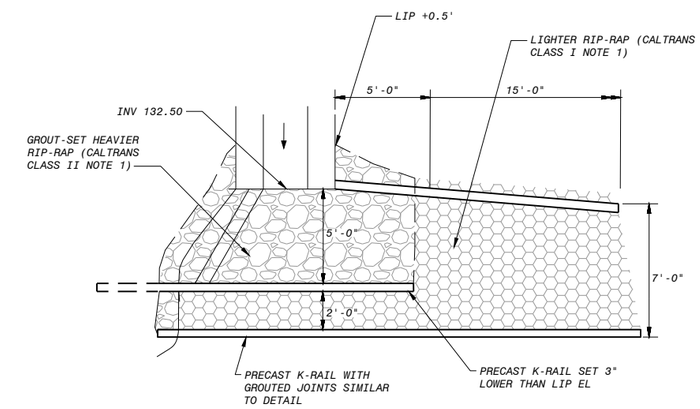


C - DISCHARGE LEVEL-SPREADER A

1/4" = 1

NOTES:

1. RIP-RAP WITH GEOFABRIC UNDERLAYMENT PER CAL TRANS STANDARD SPECIFICATIONS DIVISION VIII SECTION 72 (ROCK SLOPE PROTECTION). SET RIP-RAP IN GROUT WHERE INDICATED.

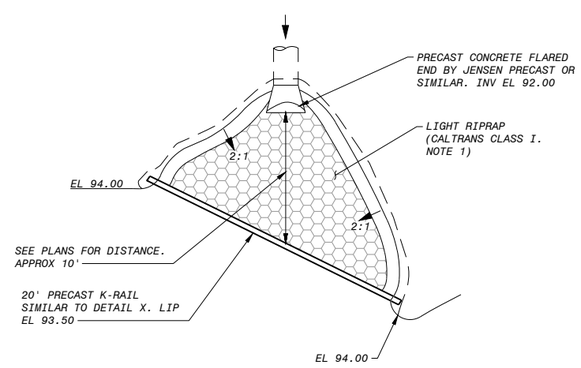


D - DISCHARGE LEVEL-SPREADER P1

1/4" = 1

| DISCHARGE OUTLET LEVEL-SPREADER SCHEDULE | | | | | | | | | |
|---|---|---|---|---|---|---|---|---|---|
| | | | INLET | | | | | | |
| DESIGNATION | LENGTH | LIP EL | DETAIL | INLET INV | INLET SIZE | OUTLET INV | OUTLET SIZE | FLOOR EL | TOP EL |
| A | 122' | 134.00' | C/10-C-502 | 132.50' | 7' SWALE | 132.50' | CHANNEL | N/A | N/A |
| B | 180' | 80.00' | B/10-C-502 | 78.50' | 24" C-900 PVC | 78.50' | 24" | 78.50' | 83.00' |
| C | 190' | 76.50' | B/10-C-502 | 75.00' | 24" C-900 PVC | 75.00' | 24" | 75.00' | 79.50' |
| P1 | 20' | 93.50' | D/10-C-502 | 92.00' | 18" C-900 PVC | N/A | N/A | N/A | N/A |

4' 2' 0 4' 8'

1/4"=1'-0"

COASTAL DEVELOPMENT PERMIT PLANS

| NO. | BY | CHK | APP |
|---|---|---|---|
| B | EVB | RTB | EVB |
| 60% SUBMITTAL | | | |

REVISIONS AND RECORD OF USE

| DATE |
|---|
| 7/19/2019 |

BLACK & VEATCH

JOINT VENTURE

FILANC

BLACK & VEATCH

CITY OF MORRO BAY
MORRO BAY WATER
RECLAMATION FACILITY (WRF)

SITE - OVERALL
CIVIL
SITE PREP GRADING AND DRAINAGE DETAILS 2

DESIGNED: EVB
DETAILED: SMM
CHECKED:
APPROVED:
DATE:

0 1/2 1

IF THIS BAR DOES NOT MEASURE 1" THEN DRAWING IS NOT TO FULL SCALE

PROJECT NO.
400530

10-C-502
SHEET
OF

FD7000
D400530

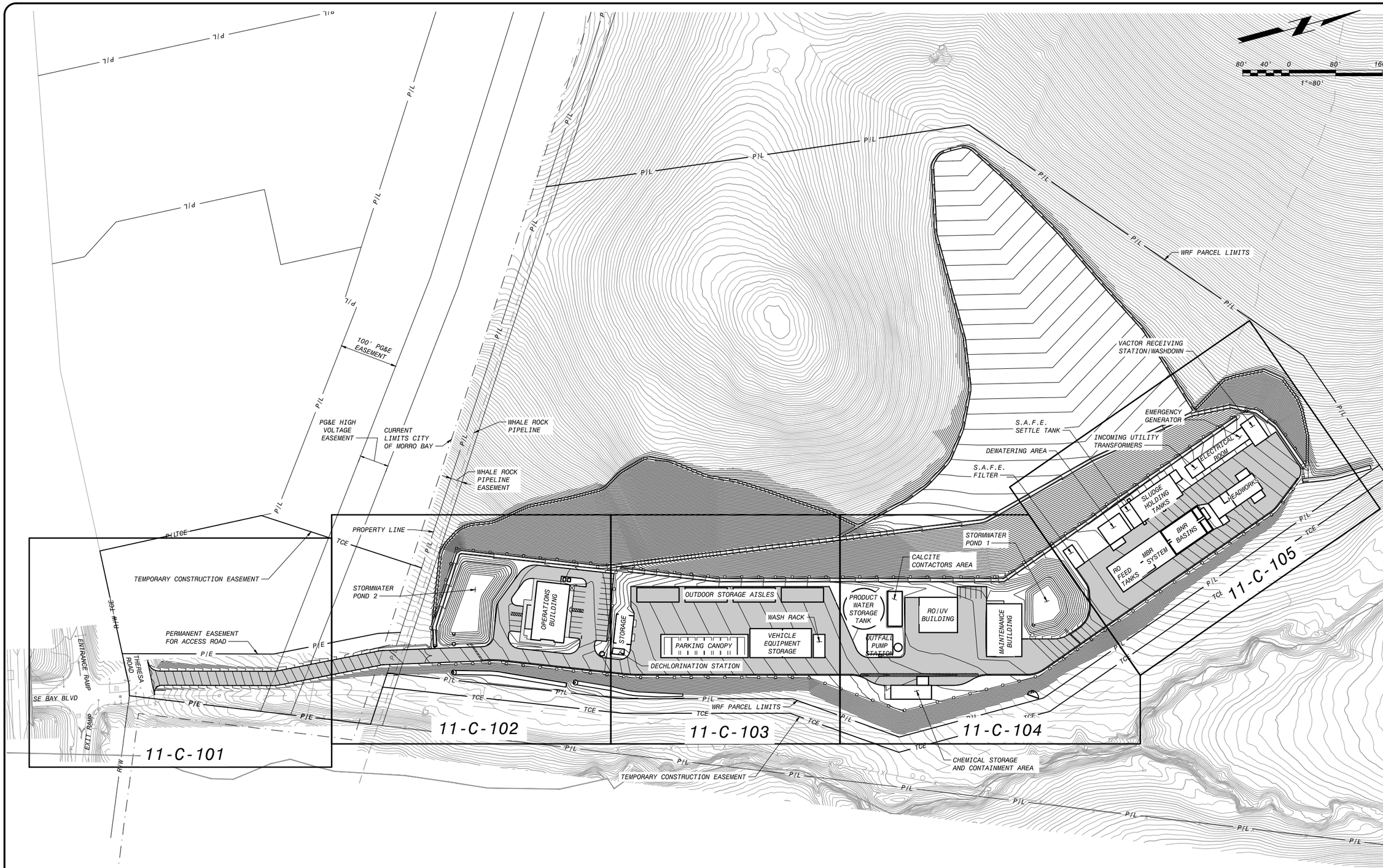


| NO. | BY | CHK | APP |
|---|---|---|---|
| B | EVB | RTB | EVB |
| A | ENV | RFW | EVB |

| DATE | REVISIONS AND RECORD OF USE |
|---|---|
| 7/30/2019 | 60% SUBMITTAL |
| 3/5/2019 | 30% SUBMITTAL |

BLACK & VEATCH

JOINT VENTURE

FILANC

BLACK & VEATCH

# CITY OF MORRO BAY
## MORRO BAY WATER RECLAMATION FACILITY (WRF)

SITE - OVERALL
CIVIL
GRADING AND PAVING KEY PLAN

DESIGNED: EBV
DETAILED: SMM
CHECKED:
APPROVED:
DATE:

0 1/2 1
IF THIS BAR DOES NOT MEASURE 1" THEN DRAWING IS NOT TO FULL SCALE

PROJECT NO.
400530

11-C-001
SHEET
OF

COASTAL DEVELOPMENT PERMIT PLANS

FD9000A
D400530
PLOTTED: 7/30/2019 1:04 PM FILE: C:\pw_working\bvw_americas\d0883625\400530-11-C-001.dwg

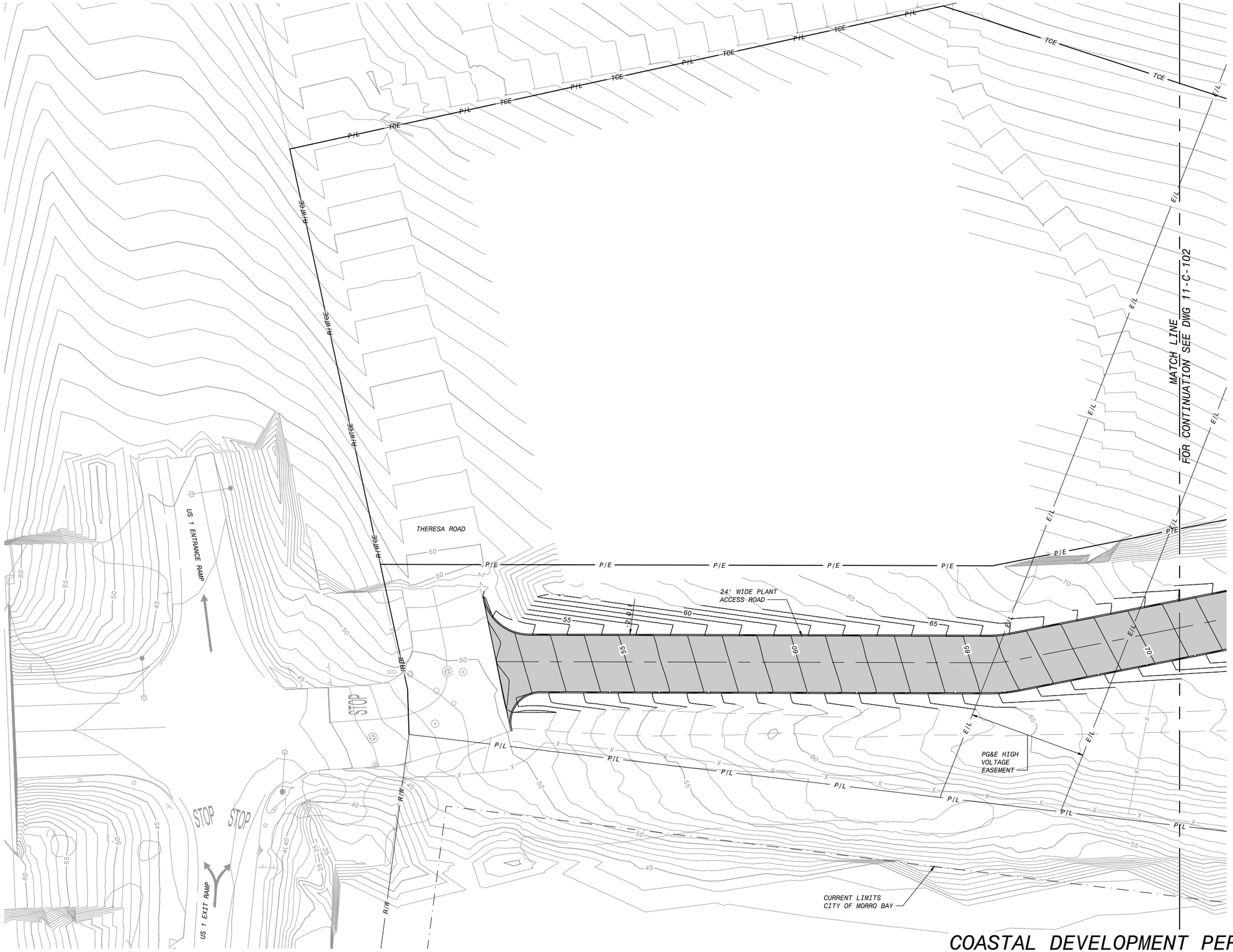


NOTES:

1. OFFSITE AND HILLSIDE DRAINAGE IS CAPTURED VIA PERIMETER SWALES AND DIVERTED AROUND THE WRF PLANT SITE. THIS IS DONE TO SEGREGATE UNDEVELOPED AREA FLOWS FROM DEVELOPED WRF AREA FLOWS TO BETTER CONTROL STORMWATER QUALITY AND FLOW. SEE SITE PREPARATION DRAWINGS (AREA 10) AND DRAINAGE REPORT FOR DETAILS ABOUT THIS SYSTEM.
2. WRF PLANT AREA STORMWATER PONDS AND OUTLET CONTROL STRUCTURES ARE TO BE CONSTRUCTED WITH EARLY (SITE PREPARATION) WORK. SEE SITE PREPARATION DRAWINGS (AREA 10) AND DRAINAGE REPORT FOR DETAILS ABOUT THIS SYSTEM.
3. SEE STRUCTURAL DRAWINGS FOR SPECIFIC LOCATION OF INDICATED BUILDING COORDINATE POINTS.
4. ADA ACCESS ZONE. SLOPE PAVING FROM 1/4" BELOW INTERIOR ELEVATION AWAY AT NO MORE THAN 2% FOR 60" OUTWARD FROM BUILDING AND 42" FROM BOTH SIDES OF DOOR.
5. VEHICLE ACCESS ZONE. SLOPE PAVING FROM 1/4" BELOW INTERIOR ELEVATION AWAY AT NO MORE THAN 5% FOR 60" OUTWARD FROM BUILDING.

20' 10' 0 20' 40'
1"=20'

COASTAL DEVELOPMENT PERMIT PLANS

| NO. | BY | CHK | APP |
|---|---|---|---|
| B | EVB | RTB | EVB |

REVISIONS AND RECORD OF USE

| DATE | |
|---|---|
| 7/30/2019 | 60% SUBMITTAL |

BLACK & VEATCH
JOINT VENTURE
FILANC
BLACK & VEATCH

CITY OF MORRO BAY
MORRO BAY WATER
RECLAMATION FACILITY (WRF)

SITE - ACCESS ROAD AREA
CIVIL
GRADING AND PAVING PLAN

DESIGNED: EVB
DETAILED: SMM
CHECKED:
APPROVED:
DATE:

0 1/2 1
IF THIS BAR DOES NOT MEASURE 1" THEN DRAWING IS NOT TO FULL SCALE

PROJECT NO.
400530

11-C-101
SHEET
OF

F09000A
D400530
PLOTTED: 7/30/2019 1:05 PM FILE: C:\pw_working\bvw_americas\00683625\400530-11-C-101-105.dwg

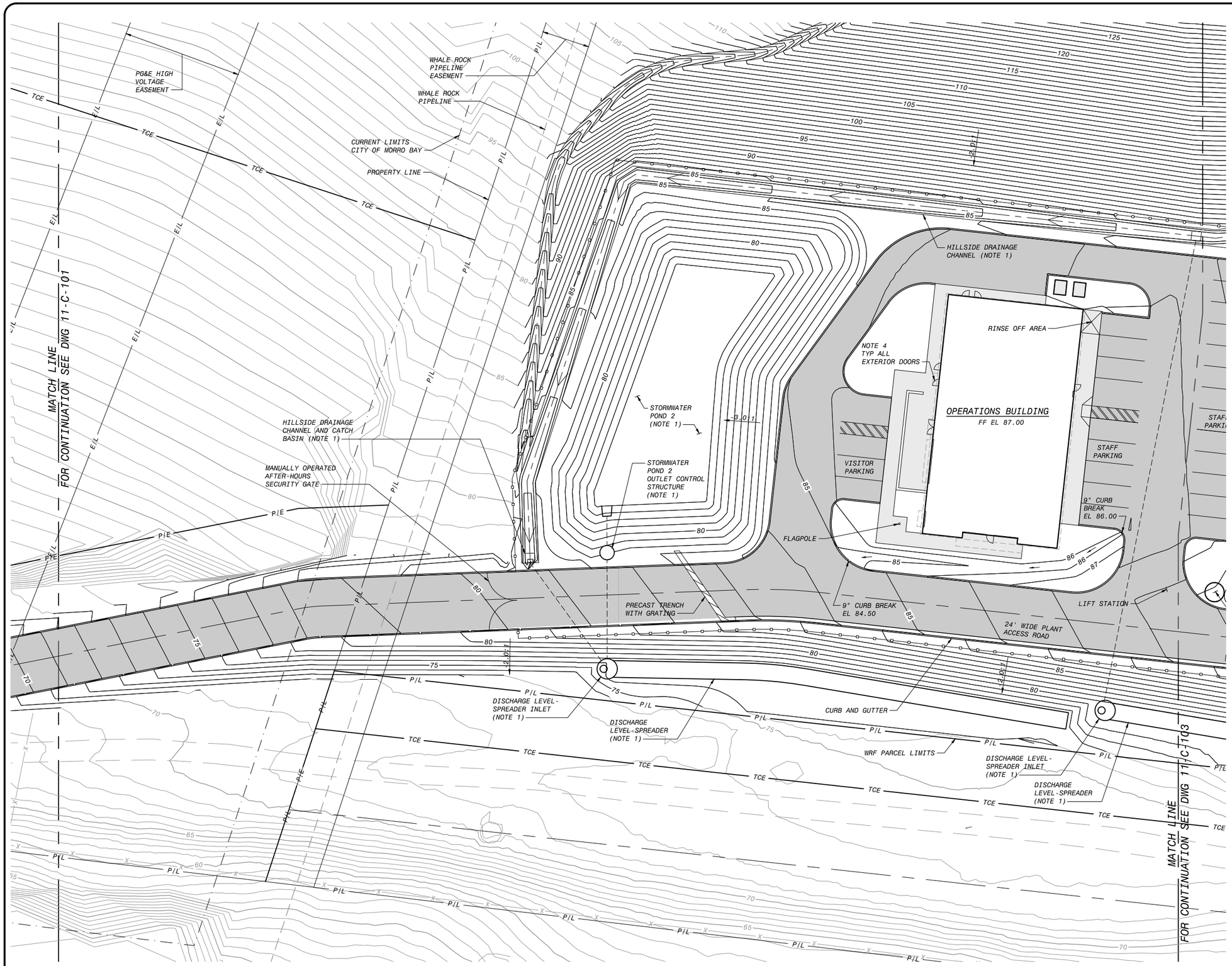


NOTES:

1. OFFSITE AND HILLSIDE DRAINAGE IS CAPTURED VIA PERIMETER SWALES AND DIVERTED AROUND THE WRF PLANT SITE. THIS IS DONE TO SEGREGATE UNDEVELOPED AREA FLOWS FROM DEVELOPED WRF AREA FLOWS TO BETTER CONTROL STORMWATER QUALITY AND FLOW. SEE SITE PREPARATION DRAWINGS (AREA 10) AND DRAINAGE REPORT FOR DETAILS ABOUT THIS SYSTEM.
2. WRF PLANT AREA STORMWATER PONDS AND OUTLET CONTROL STRUCTURES ARE TO BE CONSTRUCTED WITH EARLY (SITE PREPARATION) WORK. SEE SITE PREPARATION DRAWINGS (AREA 10) AND DRAINAGE REPORT FOR DETAILS ABOUT THIS SYSTEM.
3. SEE STRUCTURAL DRAWINGS FOR SPECIFIC LOCATION OF INDICATED BUILDING COORDINATE POINTS.
4. ADA ACCESS ZONE. SLOPE PAVING FROM 1/4" BELOW INTERIOR ELEVATION AWAY AT NO MORE THAN 2% FOR 60" OUTWARD FROM BUILDING AND 42" FROM BOTH SIDES OF DOOR.
5. VEHICLE ACCESS ZONE. SLOPE PAVING FROM 1/4" BELOW INTERIOR ELEVATION AWAY AT NO MORE THAN 5% FOR 60" OUTWARD FROM BUILDING.

| NO. | BY | CHK | APP |
|---|---|---|---|
| B | EVB | RTB | EVB |

| DATE | REVISIONS AND RECORD OF USE |
|---|---|
| 7/30/2019 | 60% SUBMITTAL |

BLACK & VEATCH
JOINT VENTURE
FILANC
BLACK & VEATCH

# CITY OF MORRO BAY
## MORRO BAY WATER RECLAMATION FACILITY (WRF)
### SITE - SOUTH OPERATIONS AREA CIVIL GRADING AND PAVING PLAN

DESIGNED: EVB
DETAILED: SMM
CHECKED:
APPROVED:
DATE:

0 1/2 1
IF THIS BAR DOES NOT MEASURE 1" THEN DRAWING IS NOT TO FULL SCALE

PROJECT NO. 400530

11-C-102
SHEET
OF

COASTAL DEVELOPMENT PERMIT PLANS

F090000A
D400530
PLOTTED: 7/30/2019 1:06 PM FILE: C:\pw_working\bvw_americas\d0683625\400530-11-C-101-105.dwg

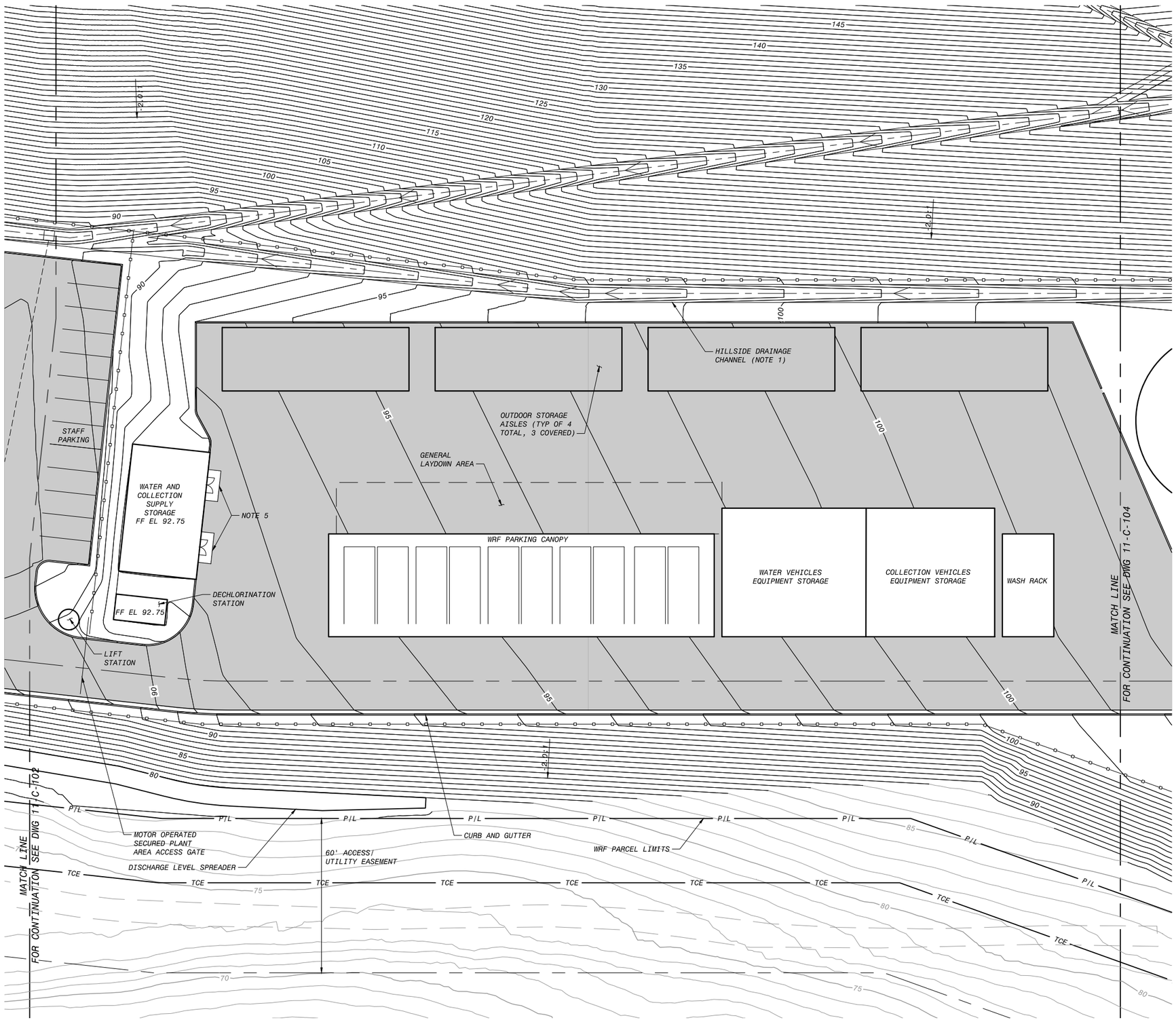


NOTES:

1. OFFSITE AND HILLSIDE DRAINAGE IS CAPTURED VIA PERIMETER SWALES AND DIVERTED AROUND THE WRF PLANT SITE. THIS IS DONE TO SEGREGATE UNDEVELOPED AREA FLOWS FROM DEVELOPED WRF AREA FLOWS TO BETTER CONTROL STORMWATER QUALITY AND FLOW. SEE SITE PREPARATION DRAWINGS (AREA 10) AND DRAINAGE REPORT FOR DETAILS ABOUT THIS SYSTEM.
2. WRF PLANT AREA STORMWATER PONDS AND OUTLET CONTROL STRUCTURES ARE TO BE CONSTRUCTED WITH EARLY (SITE PREPARATION) WORK. SEE SITE PREPARATION DRAWINGS (AREA 10) AND DRAINAGE REPORT FOR DETAILS ABOUT THIS SYSTEM.
3. SEE STRUCTURAL DRAWINGS FOR SPECIFIC LOCATION OF INDICATED BUILDING COORDINATE POINTS.
4. ADA ACCESS ZONE. SLOPE PAVING FROM 1/4" BELOW INTERIOR ELEVATION AWAY AT NO MORE THAN 2% FOR 60" OUTWARD FROM BUILDING AND 42" FROM BOTH SIDES OF DOOR.
5. VEHICLE ACCESS ZONE. SLOPE PAVING FROM 1/4" BELOW INTERIOR ELEVATION AWAY AT NO MORE THAN 5% FOR 60" OUTWARD FROM BUILDING.

| NO. | BY | CHK | APP |
|---|---|---|---|
| B | EVB | RTB | EVB |

| DATE | REVISIONS AND RECORD OF USE |
|---|---|
| 7/30/2019 | 60% SUBMITTAL |

BLACK & VEATCH

JOINT VENTURE

FILANC

BLACK & VEATCH

CITY OF MORRO BAY
MORRO BAY WATER
RECLAMATION FACILITY (WRF)

SITE - NORTH OPERATIONS AREA
CIVIL
GRADING AND PAVING PLAN

DESIGNED: EVB
DETAILED: SMM
CHECKED:
APPROVED:
DATE:

0 1/2 1
IF THIS BAR DOES NOT MEASURE 1" THEN DRAWING IS NOT TO FULL SCALE

20' 10' 0 20' 40'
1"=20'

PROJECT NO.
400530

11-C-103
SHEET
OF

COASTAL DEVELOPMENT PERMIT PLANS

FD9000A
D400530
PLOTTED: 7/30/2019 1:06 PM FILE: C:\pw_working\bvw_americas\d0683625\400530-11-C-101-105.dwg

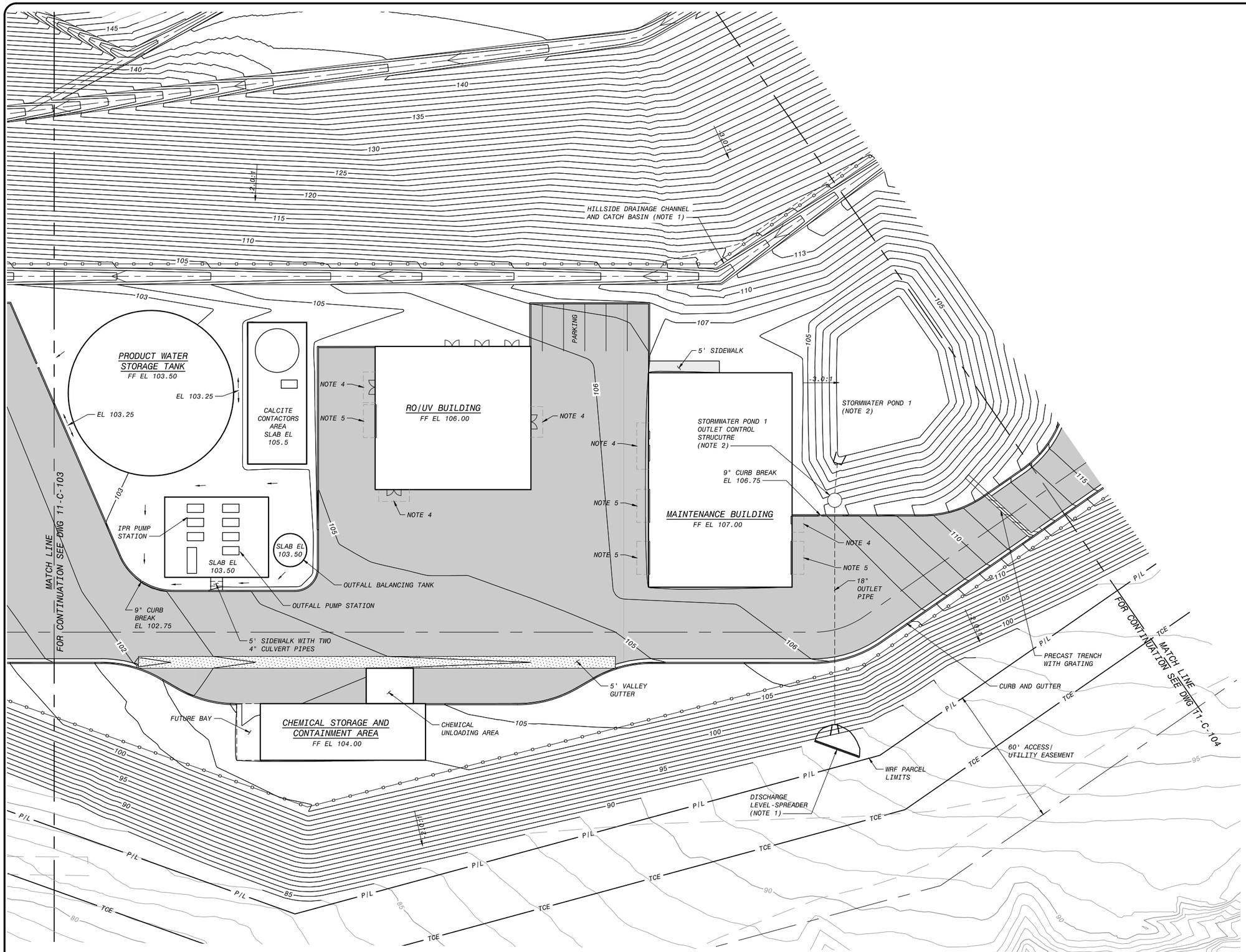


NOTES:

1. OFFSITE AND HILLSIDE DRAINAGE IS CAPTURED VIA PERIMETER SWALES AND DIVERTED AROUND THE WRF PLANT SITE. THIS IS DONE TO SEGREGATE UNDEVELOPED AREA FLOWS FROM DEVELOPED WRF AREA FLOWS TO BETTER CONTROL STORMWATER QUALITY AND FLOW. SEE SITE PREPARATION DRAWINGS (AREA 10) AND DRAINAGE REPORT FOR DETAILS ABOUT THIS SYSTEM.
2. WRF PLANT AREA STORMWATER PONDS AND OUTLET CONTROL STRUCTURES ARE TO BE CONSTRUCTED WITH EARLY (SITE PREPARATION) WORK. SEE SITE PREPARATION DRAWINGS (AREA 10) AND DRAINAGE REPORT FOR DETAILS ABOUT THIS SYSTEM.
3. SEE STRUCTURAL DRAWINGS FOR SPECIFIC LOCATION OF INDICATED BUILDING COORDINATE POINTS.
4. ADA ACCESS ZONE. SLOPE PAVING FROM 1/4" BELOW INTERIOR ELEVATION AWAY AT NO MORE THAN 2% FOR 60" OUTWARD FROM BUILDING AND 42" FROM BOTH SIDES OF DOOR.
5. VEHICLE ACCESS ZONE. SLOPE PAVING FROM 1/4" BELOW INTERIOR ELEVATION AWAY AT NO MORE THAN 5% FOR 60" OUTWARD FROM BUILDING.

| NO. | BY | CHK | APP |
|---|---|---|---|
| B | EVB | RTB | EVB |

| DATE | REVISIONS AND RECORD OF USE |
|---|---|
| 7/30/2019 | 60% SUBMITTAL |

BLACK & VEATCH
JOINT VENTURE
FILANC
BLACK & VEATCH

CITY OF MORRO BAY
MORRO BAY WATER RECLAMATION FACILITY (WRF)

SITE - SOUTH PROCESS AREA
CIVIL
GRADING AND PACING PLAN

DESIGNED: EVB
DETAILED: SMM
CHECKED:
APPROVED:
DATE:

0 1/2 1
IF THIS BAR DOES NOT MEASURE 1" THEN DRAWING IS NOT TO FULL SCALE

PROJECT NO.
400530

11-C-104
SHEET
OF

COASTAL DEVELOPMENT PERMIT PLANS

F090000A
D400530
PLOTTED: 7/30/2019 1:06 PM FILE: C:\pw_working\bvw_americas\d0683625\400530-11-C-101-105.dwg

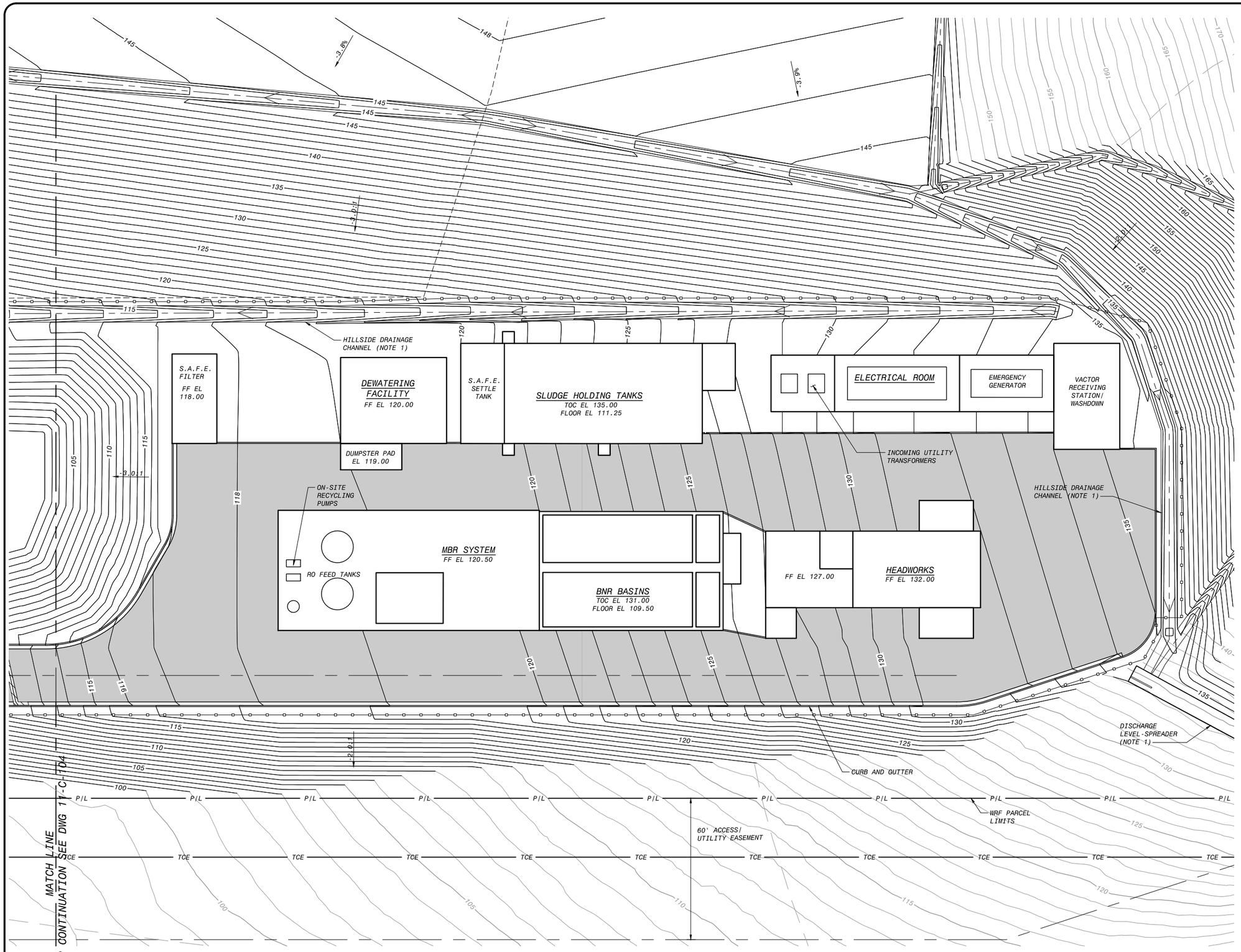


NOTES:

1. OFFSITE AND HILLSIDE DRAINAGE IS CAPTURED VIA PERIMETER SWALES AND DIVERTED AROUND THE WRF PLANT SITE. THIS IS DONE TO SEGREGATE UNDEVELOPED AREA FLOWS FROM DEVELOPED WRF AREA FLOWS TO BETTER CONTROL STORMWATER QUALITY AND FLOW. SEE SITE PREPARATION DRAWINGS (AREA 10) AND DRAINAGE REPORT FOR DETAILS ABOUT THIS SYSTEM.
2. WRF PLANT AREA STORMWATER PONDS AND OUTLET CONTROL STRUCTURES ARE TO BE CONSTRUCTED WITH EARLY (SITE PREPARATION) WORK. SEE SITE PREPARATION DRAWINGS (AREA 10) AND DRAINAGE REPORT FOR DETAILS ABOUT THIS SYSTEM.
3. SEE STRUCTURAL DRAWINGS FOR SPECIFIC LOCATION OF INDICATED BUILDING COORDINATE POINTS.
4. ADA ACCESS ZONE. SLOPE PAVING FROM 1/4" BELOW INTERIOR ELEVATION AWAY AT NO MORE THAN 2% FOR 60" OUTWARD FROM BUILDING AND 42" FROM BOTH SIDES OF DOOR.
5. VEHICLE ACCESS ZONE. SLOPE PAVING FROM 1/4" BELOW INTERIOR ELEVATION AWAY AT NO MORE THAN 5% FOR 60" OUTWARD FROM BUILDING.

| NO. | BY | CHK | APP |
|---|---|---|---|
| B | EVB | RTB | EVB |

| DATE | REVISIONS AND RECORD OF USE |
|---|---|
| 7/30/2019 | 60% SUBMITTAL |

BLACK & VEATCH
JOINT VENTURE
FILANC
BLACK & VEATCH

CITY OF MORRO BAY
MORRO BAY WATER
RECLAMATION FACILITY (WRF)

SITE - NORTH PROCESS AREA
CIVIL
GRADING AND PAVING PLAN

DESIGNED: EVB
DETAILED: SMM
CHECKED:
APPROVED:
DATE:

0 1/2 1
IF THIS BAR DOES NOT MEASURE 1" THEN DRAWING IS NOT TO FULL SCALE

PROJECT NO.
400530

11-C-105
SHEET
OF

COASTAL DEVELOPMENT PERMIT PLANS

F090000A
D400530
PLOTTED: 7/30/2019 1:06 PM FILE: C:\pw_working\bvw_americas\d0683625\400530-11-C-101-105.dwg

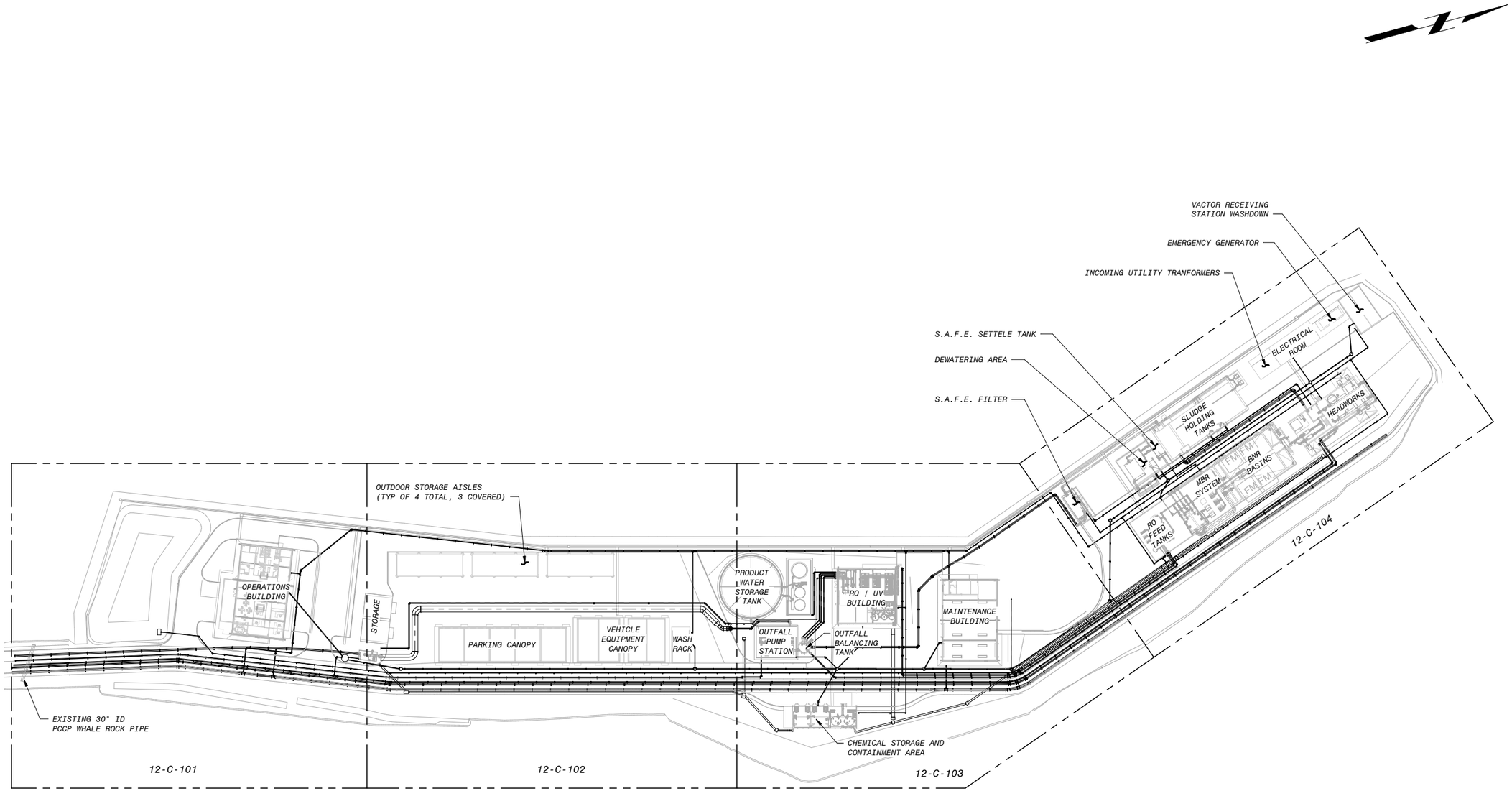


## OVERALL PIPING KEY PLAN

1" = 60'-0"

60' 30' 0 60' 120'

1" = 60'

# COASTAL DEVELOPMENT PERMIT PLANS

| NO. | BY | CHK | APP |
|---|---|---|---|
| B | AGS | RWF | EVB |
| A | EVB | RWF | EVB |

| DATE | REVISIONS AND RECORD OF USE |
|---|---|
| 7/30/2019 | 60% SUBMITTAL |
| 3/5/2019 | 30% SUBMITTAL |

BLACK & VEATCH

JOINT VENTURE

FILANC

BLACK & VEATCH

CITY OF MORRO BAY
MORRO BAY WRF
RECLAMATION FACILITY (WRF)

SITE - OVERALL
CIVIL
PIPING KEY PLAN

DESIGNED: AGS
DETAILED: SDM
CHECKED:
APPROVED:
DATE:

0 1/2 1

IF THIS BAR DOES NOT MEASURE 1" THEN DRAWING IS NOT TO FULL SCALE

PROJECT NO.
400530

12-C-001

SHEET
OF

PLOTTED: 30-JUL-19 4:25:04 PM

D400530

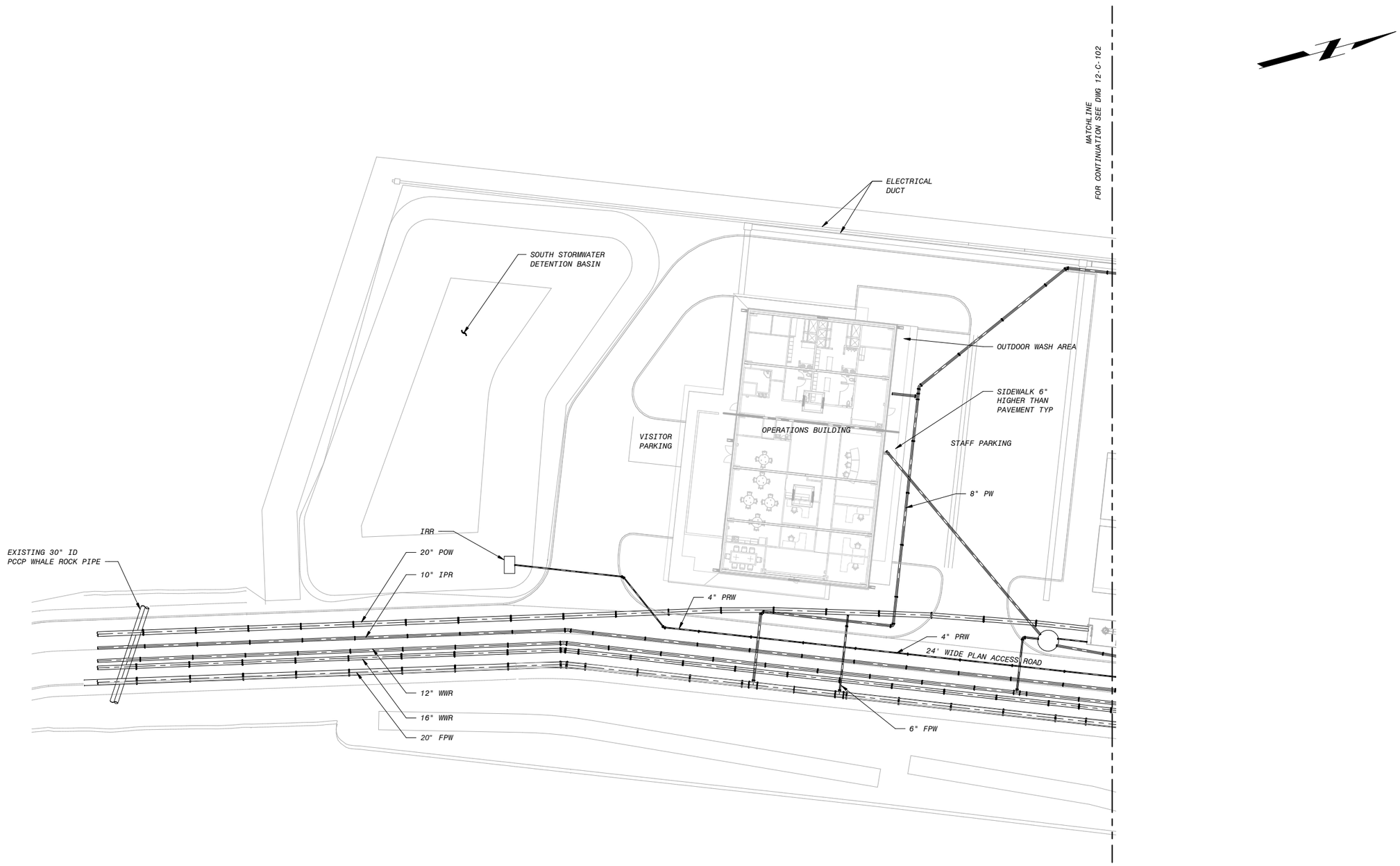


SOUTH OPERATIONS AREA PIPING PLAN

1" = 20'-0"

20' 10' 0 20' 40'

1" = 20'

COASTAL DEVELOPMENT PERMIT PLANS

| NO. | BY | CHK | APP | DATE | REVISIONS AND RECORD OF USE |
|---|---|---|---|---|---|
| B | AGS | RWF | EVB | 7/30/2019 | 60% SUBMITTAL |
| A | EVB | RWF | EVB | 3/5/2019 | 30% SUBMITTAL |

BLACK & VEATCH

JOINT VENTURE

FILANC

BLACK & VEATCH

CITY OF MORRO BAY
MORRO BAY WRF
RECLAMATION FACILITY (WRF)

SITE - SOUTH OPERATIONS AREA
CIVIL
PIPING PLAN

DESIGNED: AGS
DETAILED: SDM
CHECKED:
APPROVED:
DATE:

0 1/2 1

IF THIS BAR DOES NOT MEASURE 1" THEN DRAWING IS NOT TO FULL SCALE

PROJECT NO.
400530

12-C-101

SHEET
OF

PLOTTED: 30-JUL-19 4:27:36 PM

D400530

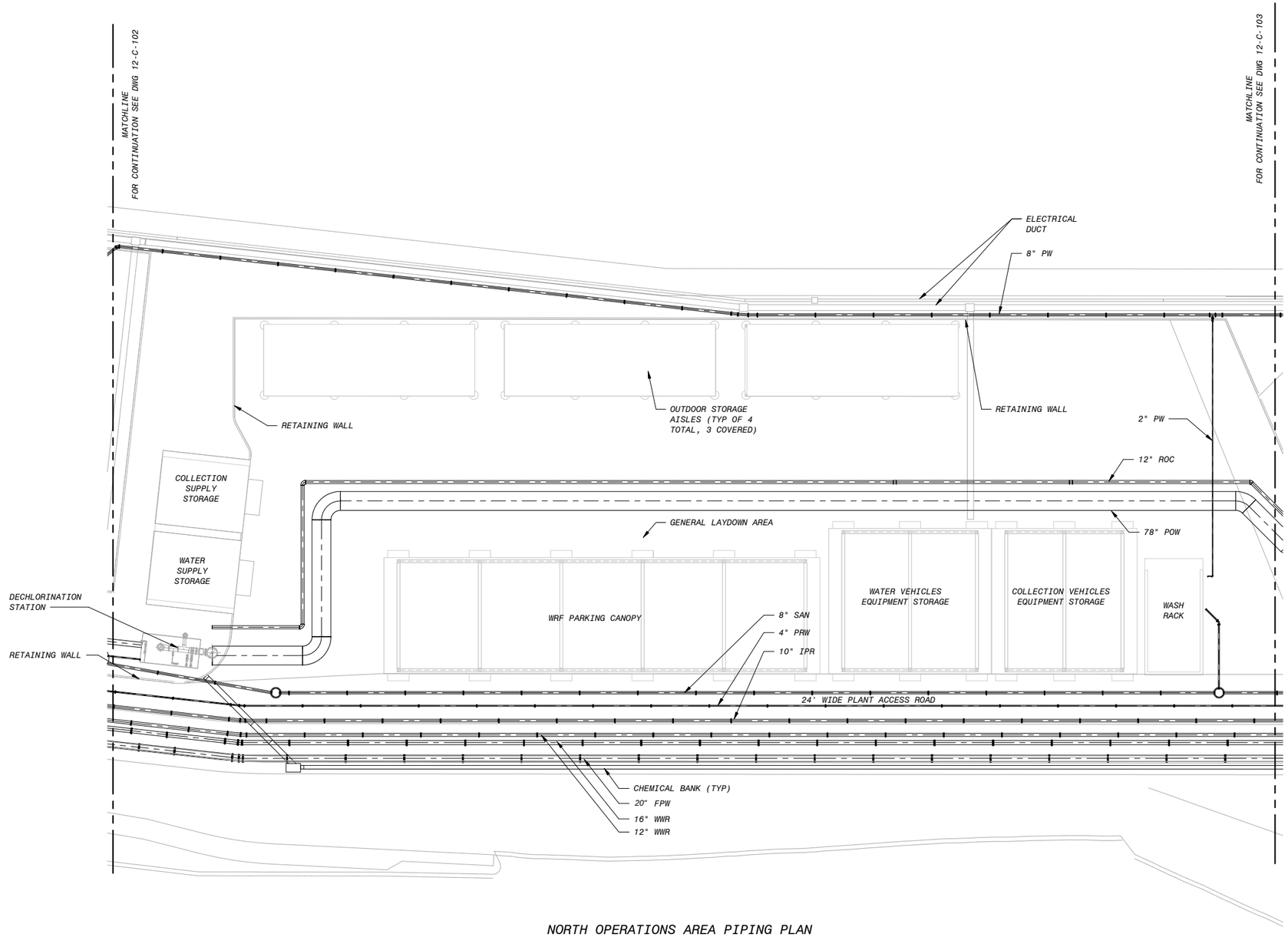


## NORTH OPERATIONS AREA PIPING PLAN

1" = 20'-0"

20' 10' 0 20' 40'

1" = 20'

# COASTAL DEVELOPMENT PERMIT PLANS

| NO. | BY | CHK | APP |
|---|---|---|---|
| B | AGS | RWF | EVB |
| A | EVB | RWF | EVB |

| DATE | REVISIONS AND RECORD OF USE |
|---|---|
| 7/30/2019 | 60% SUBMITTAL |
| 3/5/2019 | 30% SUBMITTAL |

BLACK & VEATCH
JOINT VENTURE
FILANC
BLACK & VEATCH

CITY OF MORRO BAY
MORRO BAY WRF
RECLAMATION FACILITY (WRF)

SITE - NORTH OPERATIONS AREA
CIVIL
PIPING PLAN

DESIGNED: AGS
DETAILED: SDM
CHECKED:
APPROVED:
DATE:

0 1/2 1
IF THIS BAR DOES NOT MEASURE 1" THEN DRAWING IS NOT TO FULL SCALE

PROJECT NO.
400530

12-C-102
SHEET
OF

PLOTTED: 30-JUL-19 4:28:34 PM
D400530

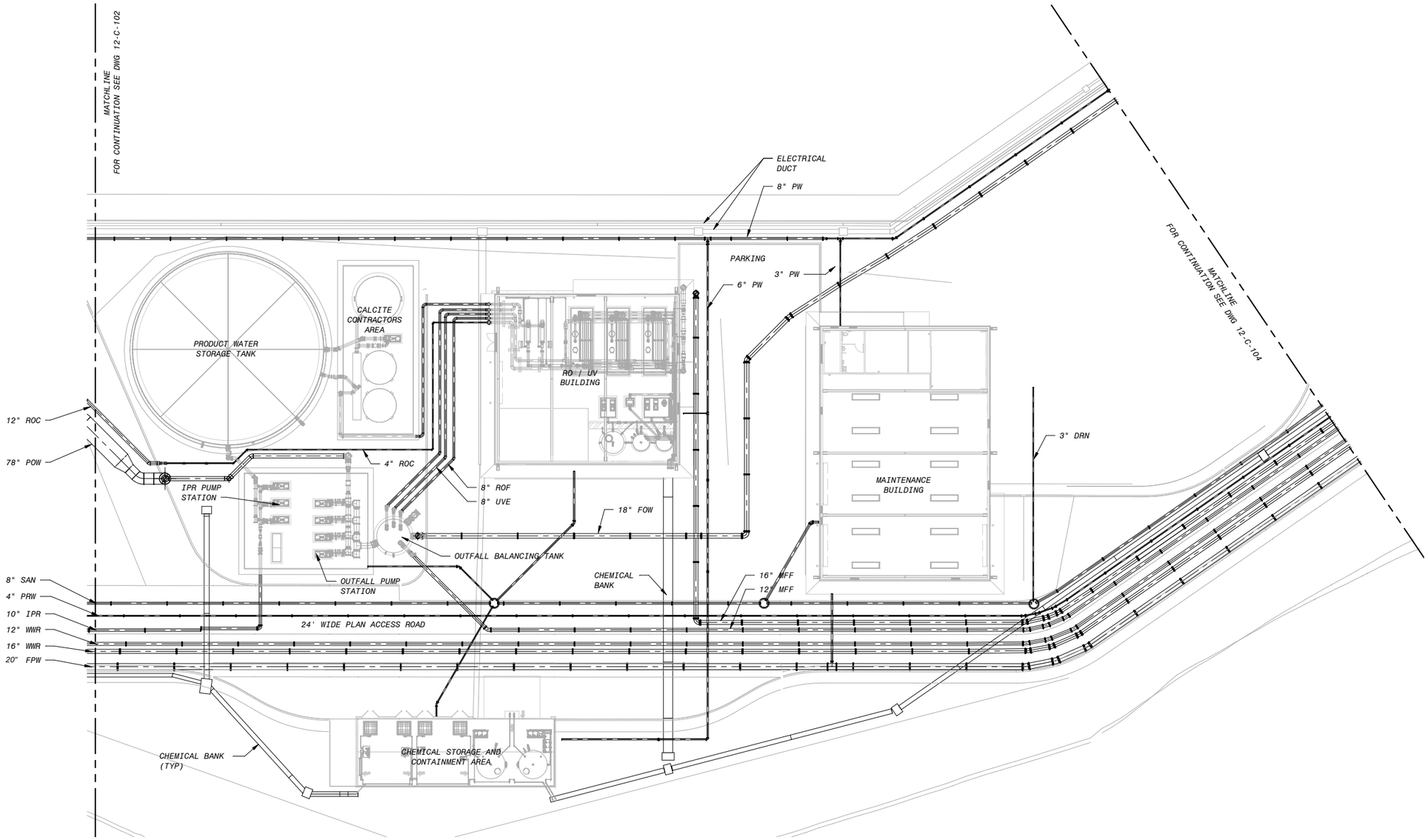


## SOUTH PROCESS AREA PIPING PLAN

1" = 20'-0"

20' 10' 0 20' 40'

1" = 20'

# COASTAL DEVELOPMENT PERMIT PLANS

| NO. | BY | CHK | APP |
|---|---|---|---|
| B | AGS | RWF | EVB |
| A | EVB | RWF | EVB |

| DATE | REVISIONS AND RECORD OF USE |
|---|---|
| 7/30/2019 | 60% SUBMITTAL |
| 3/5/2019 | 30% SUBMITTAL |

BLACK & VEATCH

JOINT VENTURE

FILANC

BLACK & VEATCH

CITY OF MORRO BAY
MORRO BAY WRF
RECLAMATION FACILITY (WRF)

SITE - SOUTH PROCESS AREA
CIVIL
PIPING PLAN

DESIGNED: AGS
DETAILED: SDM
CHECKED:
APPROVED:
DATE:

0 1/2 1

IF THIS BAR DOES NOT MEASURE 1" THEN DRAWING IS NOT TO FULL SCALE

PROJECT NO.
400530

12-C-103
SHEET
OF

PLOTTED: 30-JUL-19 4:29:31 PM
D400530

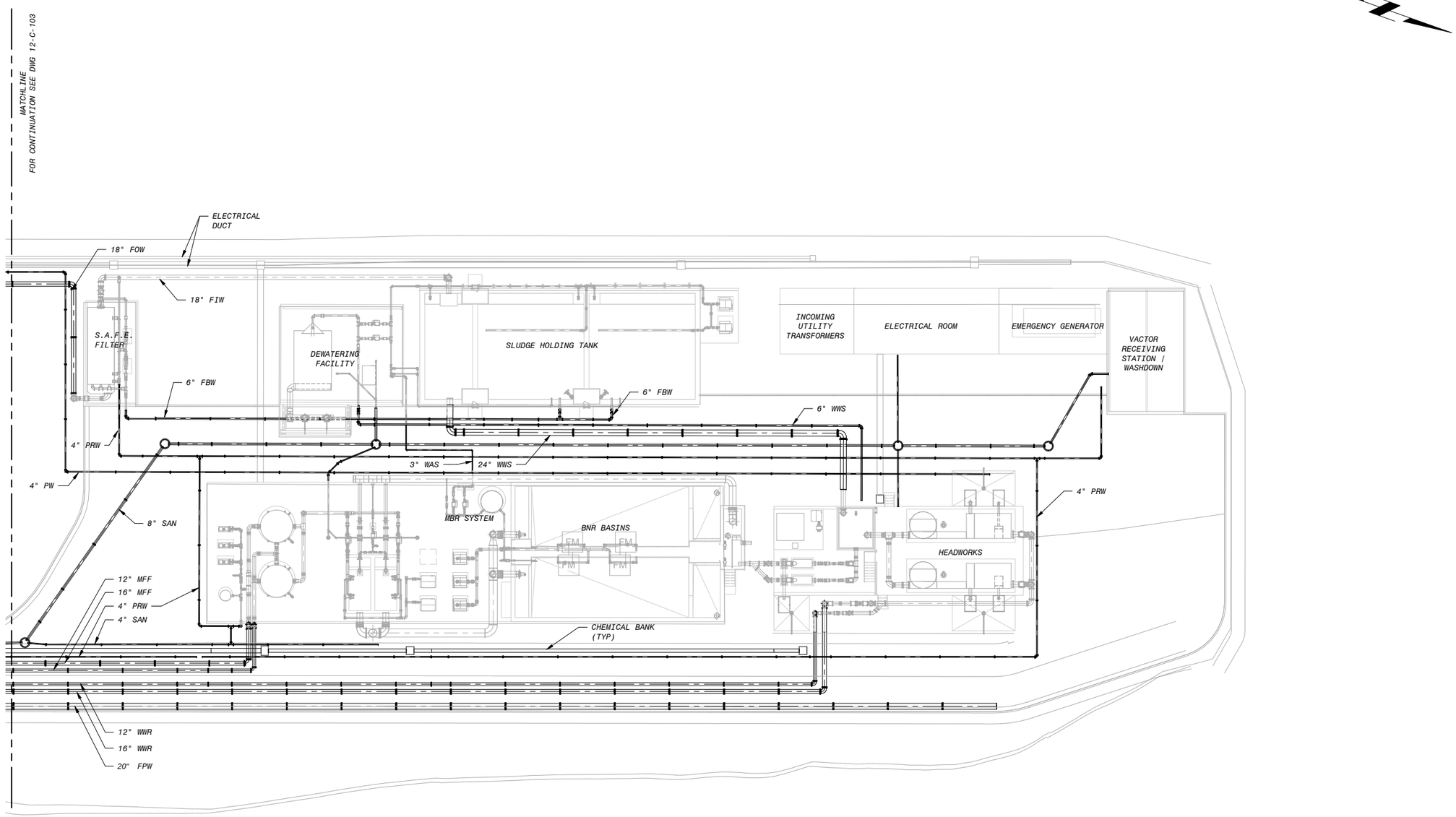


NORTH PROCESS AREA PIPING PLAN

1" = 20'-0"

20' 10' 0 20' 40'

1" = 20'

COASTAL DEVELOPMENT PERMIT PLANS

| DATE | REVISIONS AND RECORD OF USE | NO. | BY | CHK | APP |
|---|---|---|---|---|---|
| 7/30/2019 | 60% SUBMITTAL | B | AGS | RWF | EVB |
| 3/5/2019 | 30% SUBMITTAL | A | EVB | RWF | EVB |

BLACK & VEATCH

JOINT VENTURE

FILANC

BLACK & VEATCH

CITY OF MORRO BAY
MORRO BAY WRF
RECLAMATION FACILITY (WRF)

SITE - NORTH PROCESS AREA
CIVIL
PIPING PLAN

DESIGNED: AGS
DETAILED: SDM
CHECKED:
APPROVED:
DATE:

0 1/2 1

IF THIS BAR DOES NOT MEASURE 1" THEN DRAWING IS NOT TO FULL SCALE

PROJECT NO.
400530

12-C-104

SHEET
OF

PLOTTED: 30-JUL-19 4:30:13 PM

D400530

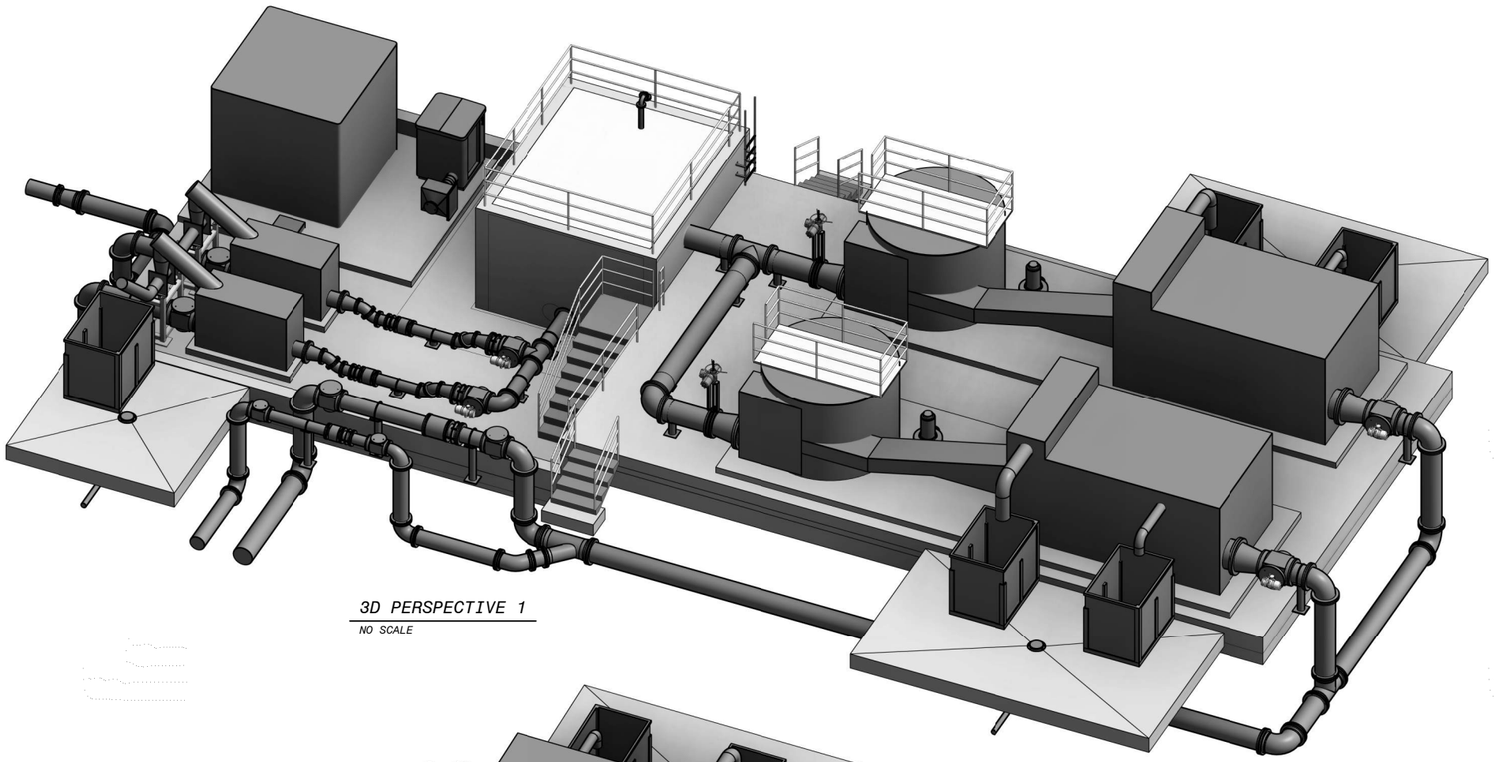

3D PERSPECTIVE 1

NO SCALE

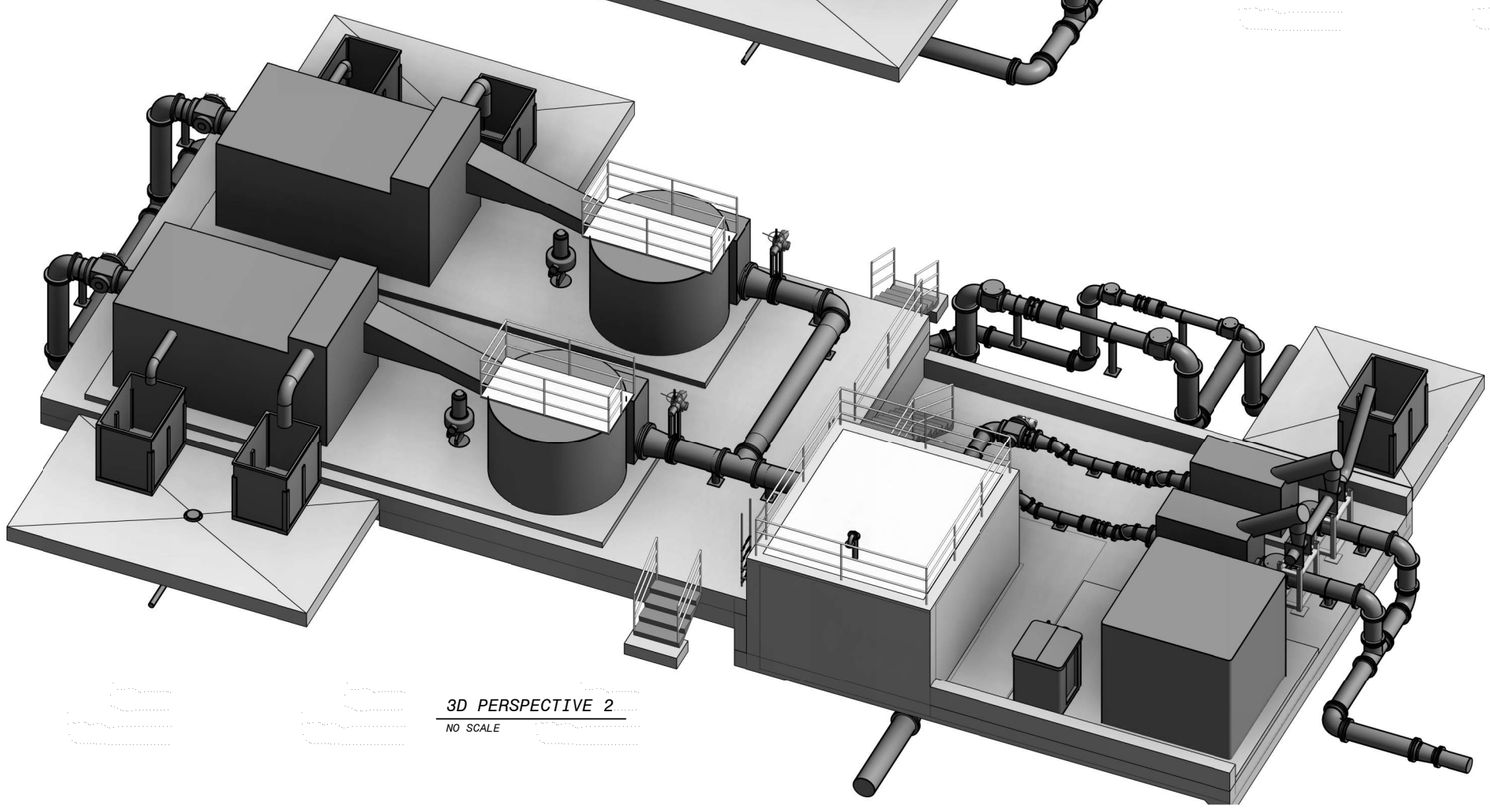

3D PERSPECTIVE 2

NO SCALE

COASTAL DEVELOPMENT PERMIT PLANS

| NO. | DATE | REVISIONS AND RECORD OF USE | BY | CHK | APP |
|---|---|---|---|---|---|
| B | 7/30/2019 | 60% SUBMITTAL | TDE | RT | EVB |
| A | 3/5/2019 | 30% SUBMITTAL | TDE | RWF | EVB |

BLACK & VEATCH

JOINT VENTURE

FILANC

BLACK & VEATCH

CITY OF MORRO BAY
MORRO BAY WATER
RECLAMATION FACILITY (WRF)

HEADWORKS AREA - OVERALL
CIVIL-MECHANICAL
3D VIEWS

DESIGNED: TDE
DETAILED: MAK
CHECKED:
APPROVED:
DATE:

0 1/2 1

IF THIS BAR DOES NOT MEASURE 1" THEN DRAWING IS NOT TO FULL SCALE

PROJECT NO.
400530

20-M-001

SHEET
OF

PLOTTED: 7/30/2019 10:40:16 AM

D400530

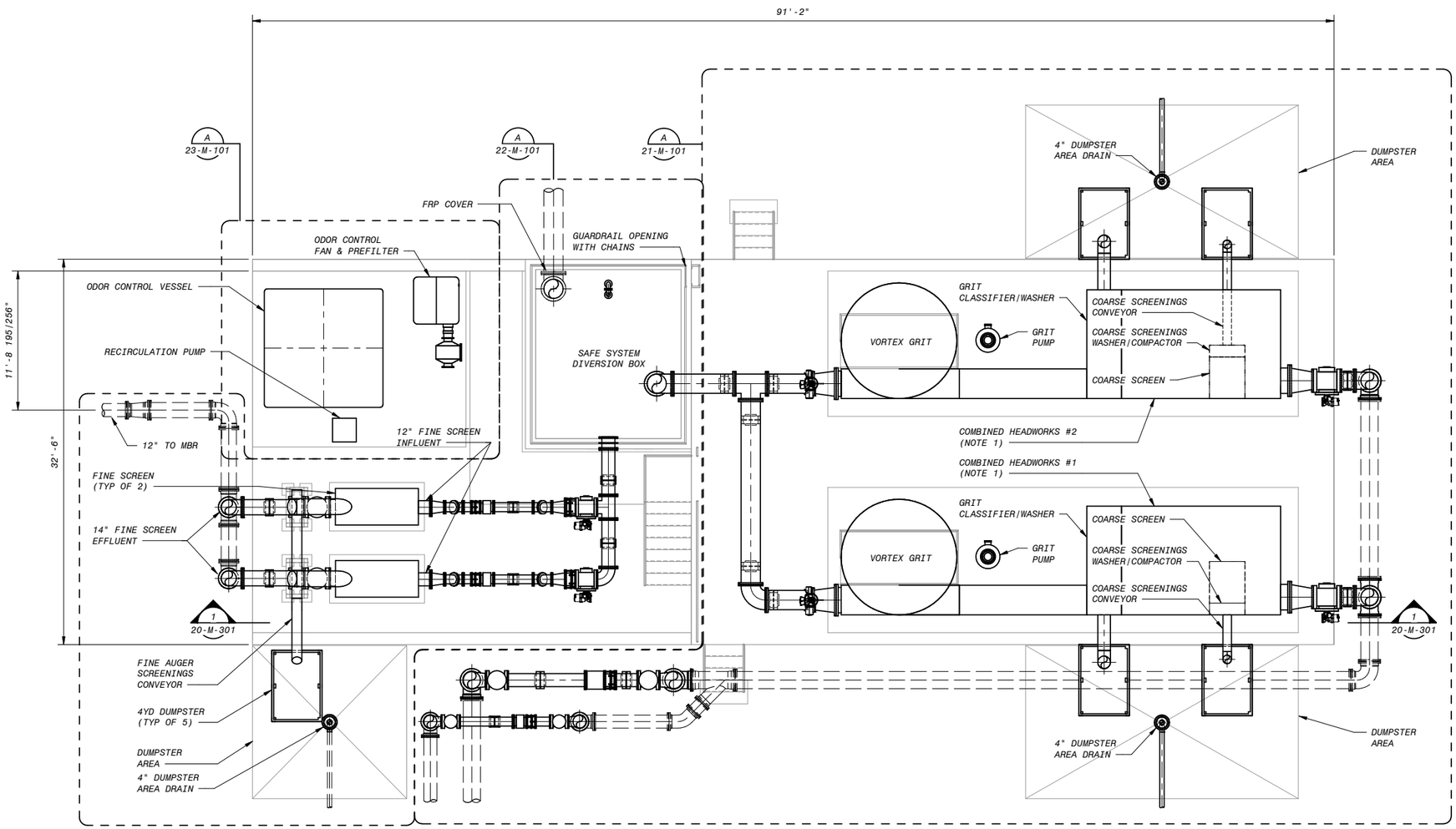


HEADWORKS AREA - OVERALL - OPERATING LEVEL PLAN

3/16" = 1'-0"

NOTES:

1. PACKAGE HEADWORKS LAYOUT IS VENDOR SPECIFIC. THIS LAYOUT WILL BY ADJUSTED WHEN HEADWORKS PACKAGE IS PROCURED.

| NO. | BY | CHK | APP |
|---|---|---|---|
| B | TDE | RT | EVB |
| A | TDE | RWF | EVB |

| DATE | REVISIONS AND RECORD OF USE |
|---|---|
| 7/30/2019 | 60% SUBMITTAL |
| 3/5/2019 | 30% SUBMITTAL |

BLACK & VEATCH

JOINT VENTURE

FILANC

BLACK & VEATCH

CITY OF MORRO BAY
MORRO BAY WATER
RECLAMATION FACILITY (WRF)

HEADWORKS AREA - OVERALL
CIVIL-MECHANICAL
OPERATING LEVEL PLAN

DESIGNED: TDE
DETAILED: MAK
CHECKED:
APPROVED:
DATE:

0 1/2 1

IF THIS BAR DOES NOT MEASURE 1" THEN DRAWING IS NOT TO FULL SCALE

PROJECT NO.
400530

20-M-101
SHEET
OF

6" 4' 2' 0' 5' 10'

3/16" = 1'-0"

COASTAL DEVELOPMENT PERMIT PLANS

PLOTTED: 7/30/2019 10:40:19 AM

D400530

NOTES:

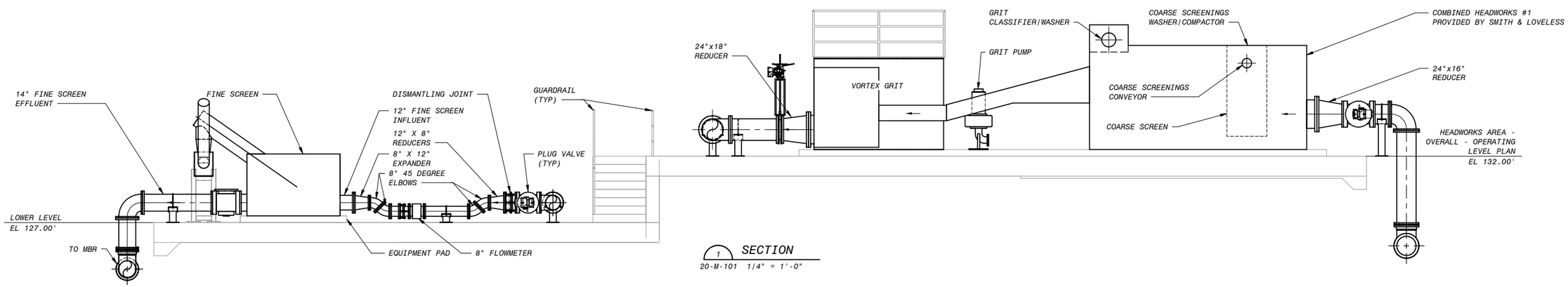


1 SECTION
20-M-101 1/4" = 1'-0"

4' 2' 0' 4' 8'
1/4" = 1'-0"

COASTAL DEVELOPMENT PERMIT PLANS

| NO. | BY | CHK | APP | DATE | REVISIONS AND RECORD OF USE |
|---|---|---|---|---|---|
| B | TDE | RT | EVB | 7/30/2019 | 60% SUBMITTAL |
| A | TDE | RWF | EVB | 3/5/2019 | 30% SUBMITTAL |

BLACK & VEATCH
JOINT VENTURE
FILANC
BLACK & VEATCH

CITY OF MORRO BAY
MORRO BAY WATER
RECLAMATION FACILITY (WRF)

HEADWORKS AREA - OVERALL
CIVIL-MECHANICAL
SECTIONS

DESIGNED: TDE
DETAILED: MAK
CHECKED:
APPROVED:
DATE:

0 1/2 1
IF THIS BAR DOES NOT MEASURE 1" THEN DRAWING IS NOT TO FULL SCALE

PROJECT NO.
400530

20-M-301
SHEET
OF

PLOTTED: 7/30/2019 10:40:21 AM
D400530

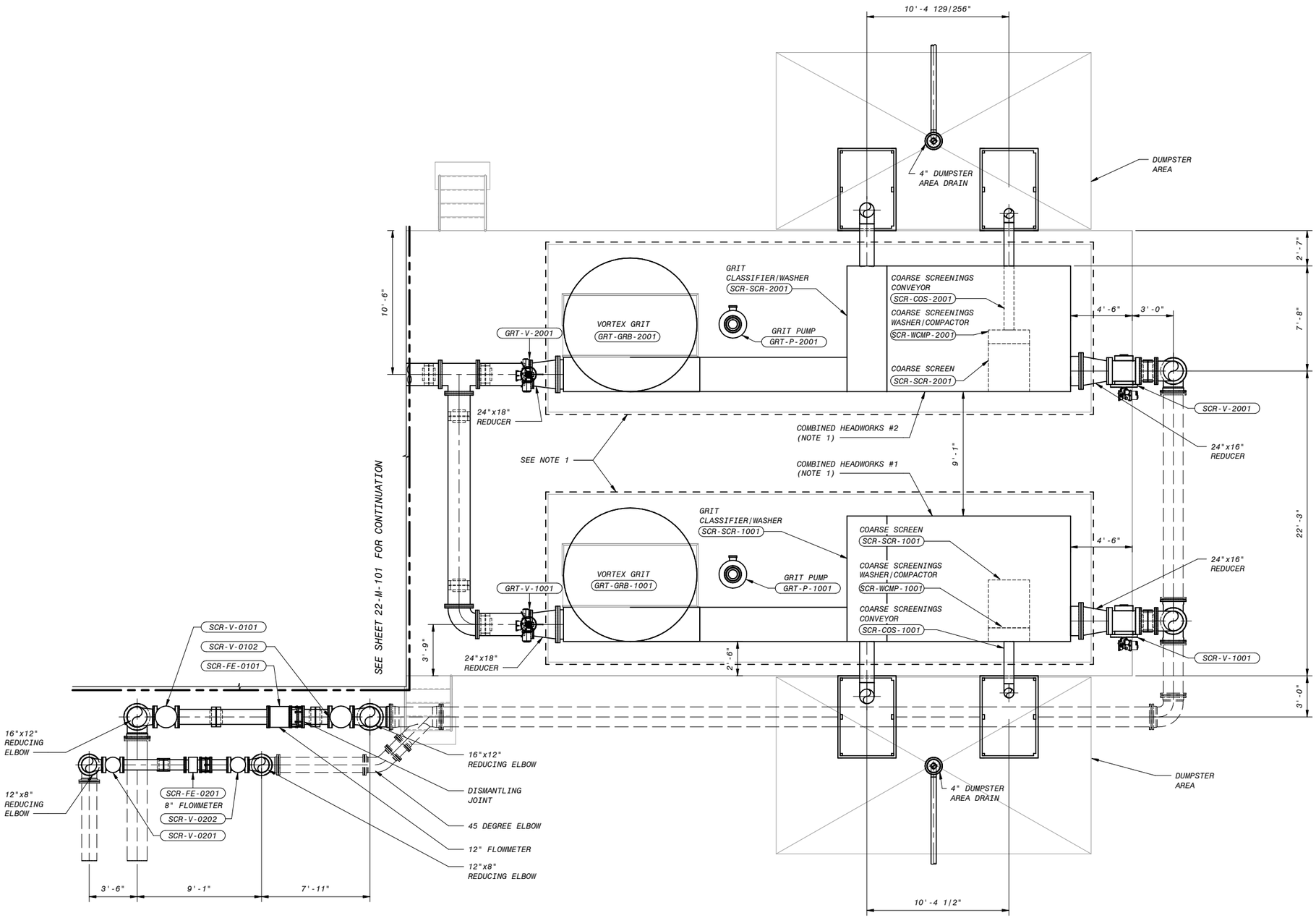


HEADWORKS AREA - HEADWORKS - PLAN

1/4" = 1'-0"

NOTES:

1. THE BOUNDARY SHOWN FOR PACKAGED HEADWORKS SYSTEMS REPRESENTS THE AVAILABLE SPACE FOR THE PACKAGED HEADWORKS SYSTEMS SUPPLIER TO PROVIDE THEIR SYSTEMS THAT MEET THE SPECIFICATION REQUIREMENTS. THE SYSTEM SHOWN ON THE DRAWINGS WILL BE ADJUSTED TO MATCH THE SELECTED PACKAGED HEADWORKS SYSTEM SUPPLIER'S PROPOSED DESIGN.

4' 2' 0' 4' 8'

1/4" = 1'-0"

COASTAL DEVELOPMENT PERMIT PLANS

| NO. | BY | CHK | APP |
|---|---|---|---|
| A | TDE | RT | EVB |

| DATE | REVISIONS AND RECORD OF USE |
|---|---|
| 7/30/2019 | 60% SUBMITTAL |

BLACK & VEATCH

JOINT VENTURE

FILANC

BLACK & VEATCH

CITY OF MORRO BAY
MORRO BAY WATER
RECLAMATION FACILITY (WRF)

HEADWORKS AREA - HEADWORKS
CIVIL-MECHANICAL
PLAN

DESIGNED: TDE
DETAILED: RMB
CHECKED:
APPROVED:
DATE:

0 1/2 1

IF THIS BAR DOES NOT MEASURE 1" THEN DRAWING IS NOT TO FULL SCALE

PROJECT NO.
400530

21-M-101
SHEET
OF

PLOTTED: 7/30/2019 10:40:24 AM

D400530

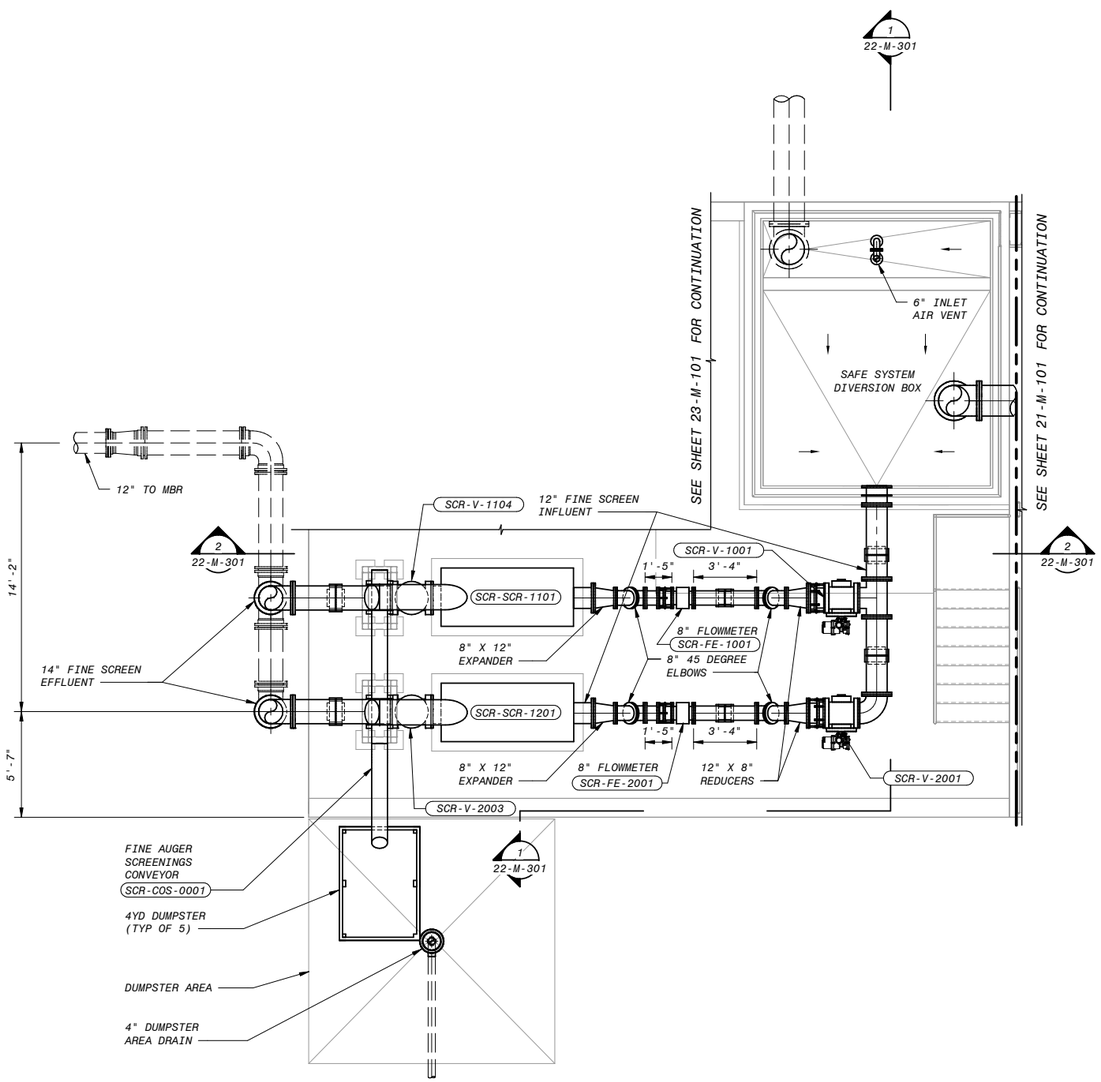


HEADWORKS AREA - FINE SCREENS - PLAN

1/4" = 1'-0"

4' 2' 0' 4' 8'

1/4" = 1'-0"

COASTAL DEVELOPMENT PERMIT PLANS

| NO. | BY | CHK | APP |
|---|---|---|---|
| A | TDE | RT | EVB |

60% SUBMITTAL

REVISIONS AND RECORD OF USE

DATE 7/30/2019

BLACK & VEATCH

JOINT VENTURE

FILANC

BLACK & VEATCH

CITY OF MORRO BAY
MORRO BAY WATER
RECLAMATION FACILITY (WRF)

HEADWORKS AREA - FINE SCREENS
CIVIL-MECHANICAL
PLAN

DESIGNED: TDE
DETAILED: RMB
CHECKED:
APPROVED:
DATE:

0 1/2 1

IF THIS BAR DOES NOT MEASURE 1" THEN DRAWING IS NOT TO FULL SCALE

PROJECT NO.
400530

22-M-101
SHEET
OF

PLOTTED: 7/30/2019 10:40:25 AM

D400530

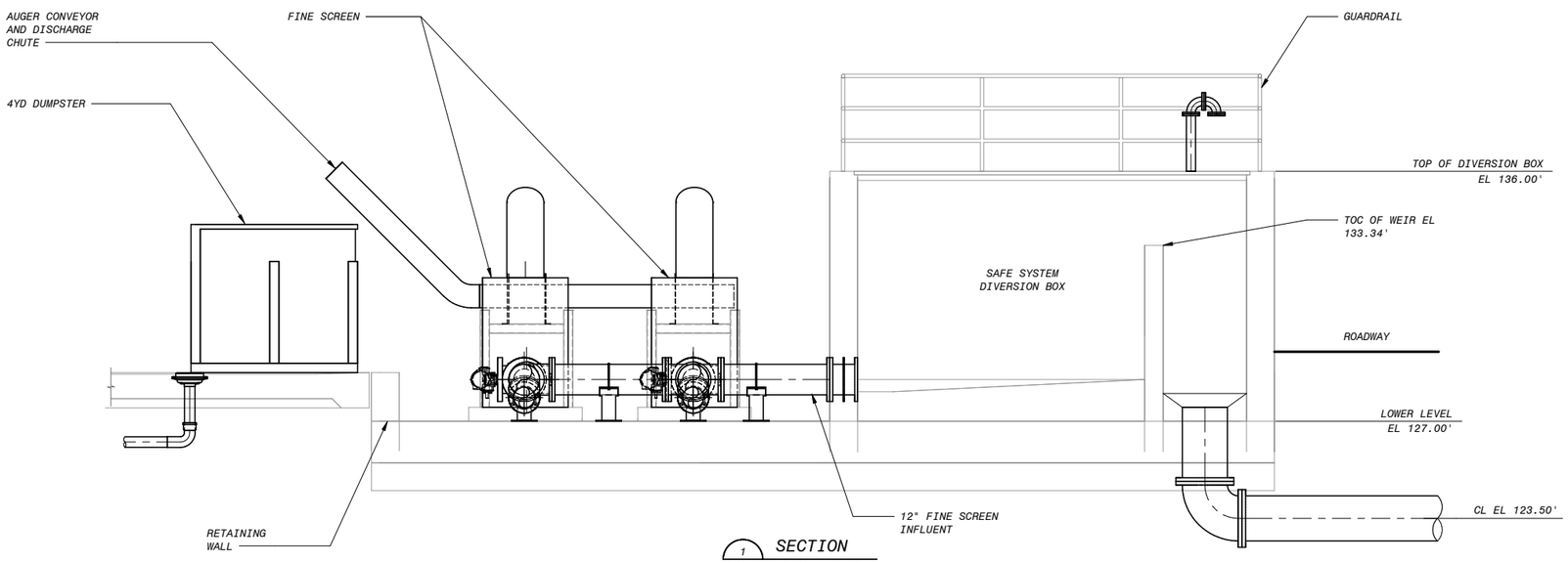


1 SECTION
22-M-101 3/8" = 1'-0"

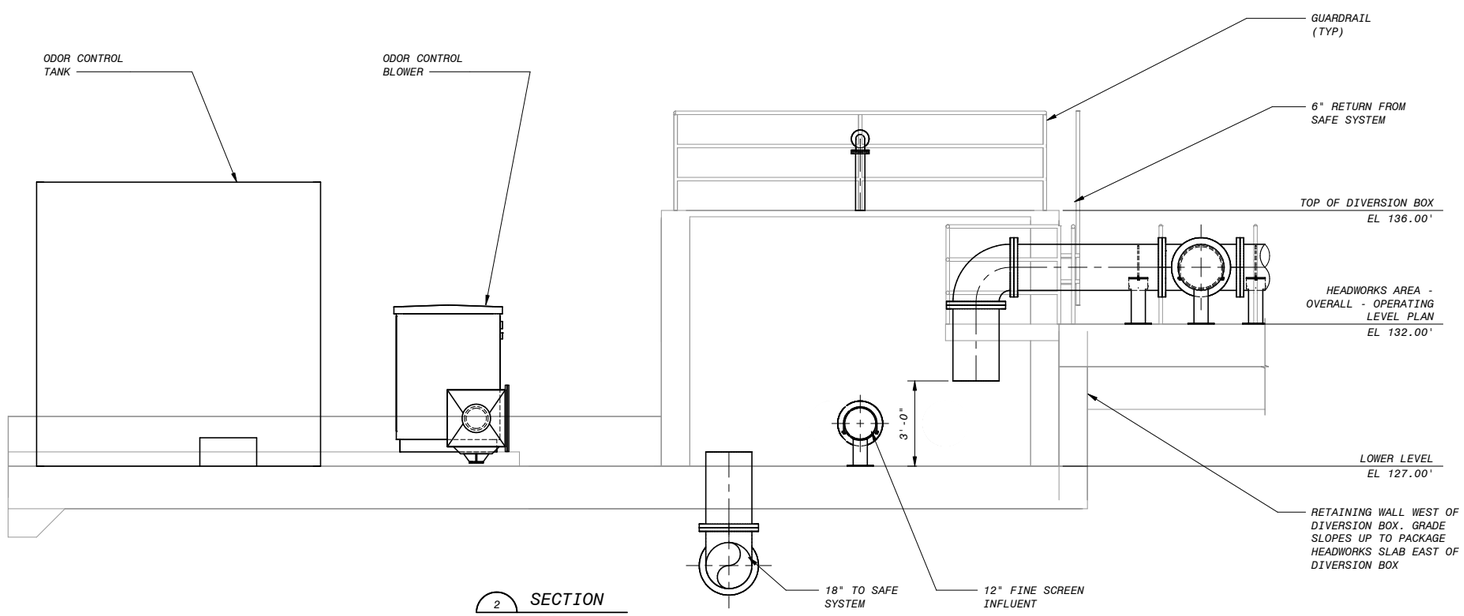


2 SECTION
22-M-101 3/8" = 1'-0"

12" 0' 1' 2' 3' 4' 5' 6' 7'
3/8" = 1'-0"

# COASTAL DEVELOPMENT PERMIT PLANS

| NO. | BY | CHK | APP |
|---|---|---|---|
| A | TDE | RT | EVB |

60% SUBMITTAL
REVISIONS AND RECORD OF USE
7/30/2019
DATE

BLACK & VEATCH
JOINT VENTURE
FILANC
BLACK & VEATCH

CITY OF MORRO BAY
MORRO BAY WATER
RECLAMATION FACILITY (WRF)

HEADWORKS AREA - FINE SCREENS
CIVIL-MECHANICAL
SECTIONS AND DETAILS 1

DESIGNED: TDE
DETAILED: RMB
CHECKED:
APPROVED:
DATE:

0 1/2 1
IF THIS BAR DOES NOT MEASURE 1" THEN DRAWING IS NOT TO FULL SCALE

PROJECT NO.
400530

22-M-301
SHEET
OF

PLOTTED: 7/30/2019 10:40:27 AM
D400530

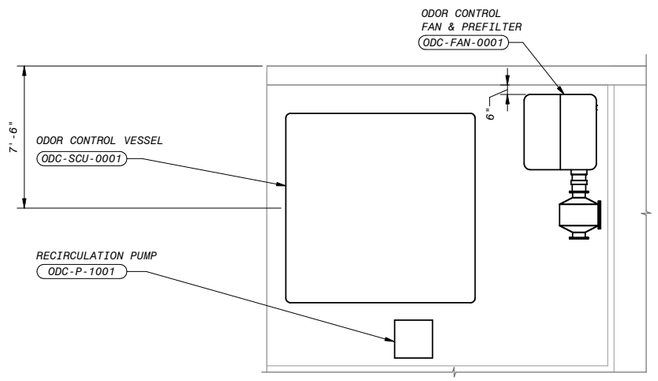


HEADWORKS AREA - ODOR CONTROL - PLAN

1/4" = 1'-0"

4' 2' 0' 4' 8'

1/4" = 1'-0"

COASTAL DEVELOPMENT PERMIT PLANS

| NO. | BY | CHK | APP |
|---|---|---|---|
| A | TDE | RT | EVB |

| DATE | REVISIONS AND RECORD OF USE |
|---|---|
| 7/30/2019 | 60% SUBMITTAL |

BLACK & VEATCH
JOINT VENTURE
FILANC
BLACK & VEATCH

CITY OF MORRO BAY
MORRO BAY WATER
RECLAMATION FACILITY (WRF)

HEADWORKS AREA - ODOR CONTROL
CIVIL-MECHANICAL
PLAN, SECTIONS AND DETAILS

DESIGNED: TDE
DETAILED: RMB
CHECKED:
APPROVED:
DATE:

0 1/2 1
IF THIS BAR DOES NOT MEASURE 1" THEN DRAWING IS NOT TO FULL SCALE

PROJECT NO.
400530

23-M-101
SHEET
OF

PLOTTED: 7/30/2019 10:40:27 AM
D400530

NOTES:

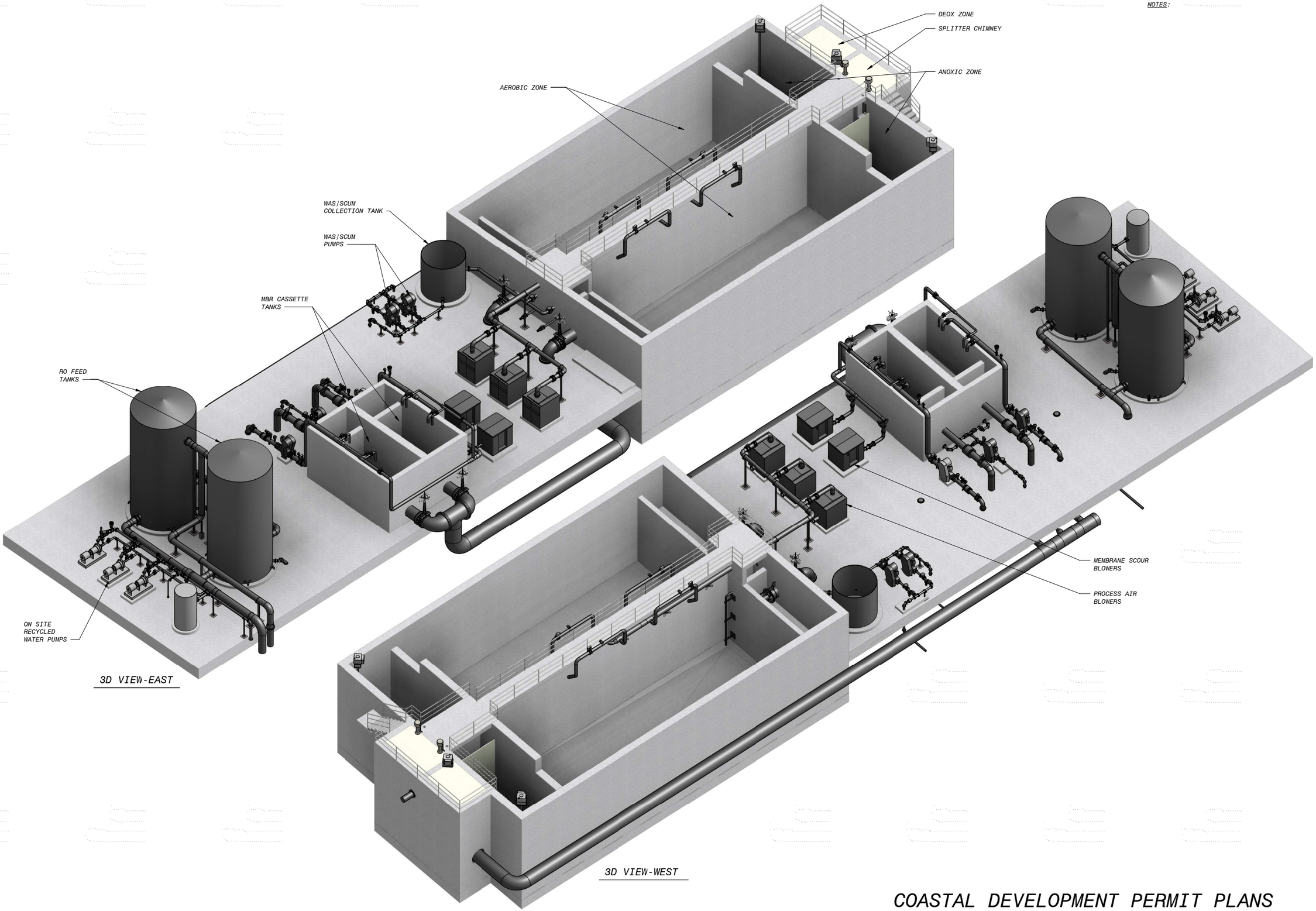


COASTAL DEVELOPMENT PERMIT PLANS

| NO. | BY | CHK | APP | DATE | REVISIONS AND RECORD OF USE |
|---|---|---|---|---|---|
| B | KEZ | RT | EVB | 7/30/2019 | 60% SUBMITTAL |
| A | KEZ | RWF | EVB | 3/5/2019 | 30% SUBMITTAL |

BLACK & VEATCH
JOINT VENTURE
FILANC
BLACK & VEATCH

CITY OF MORRO BAY
MORRO BAY WATER
RECLAMATION FACILITY (WRF)

TREATMENT AREA - OVERALL
CIVIL-MECHANICAL
3D VIEWS

DESIGNED: KEZ
DETAILED: MAK
CHECKED:
APPROVED:
DATE:

0 1/2 1
IF THIS BAR DOES NOT MEASURE 1" THEN DRAWING IS NOT TO FULL SCALE

PROJECT NO.
400530

30-M-001
SHEET
OF

PLOTTED: 7/29/2019 2:05:17 PM
D400530

NOTES:

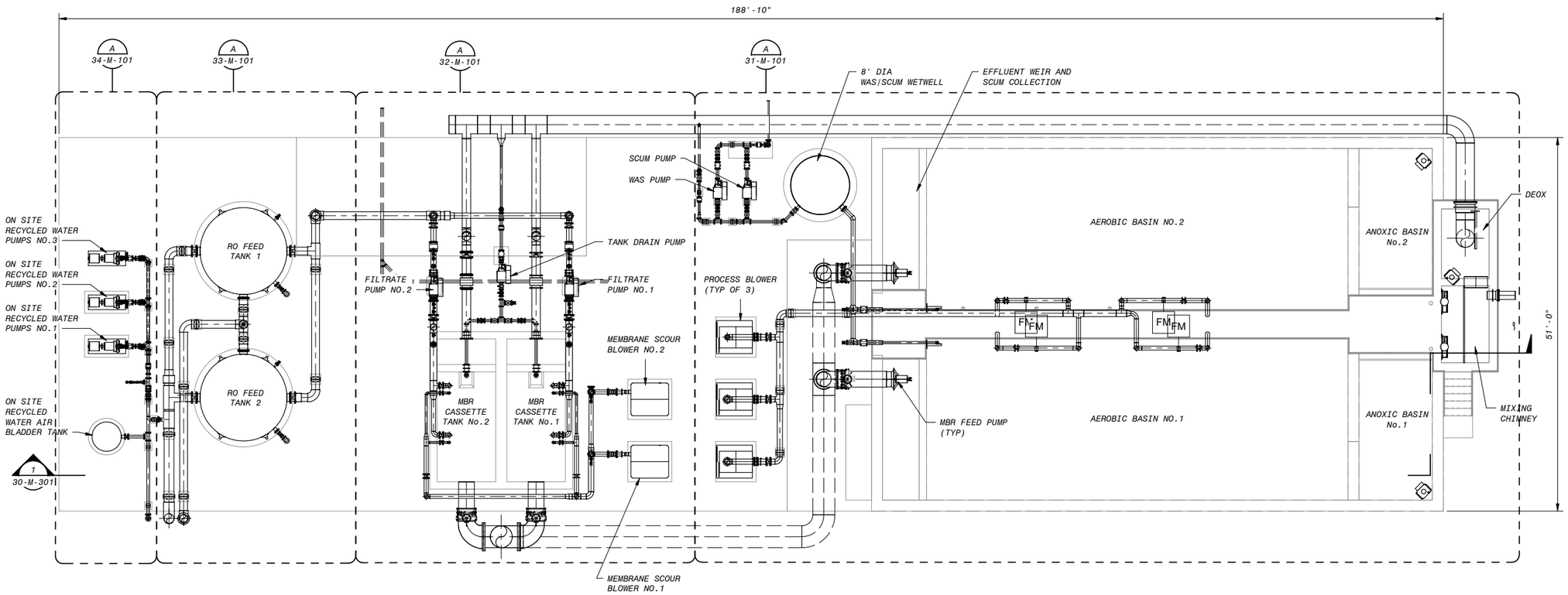


TREATMENT AREA - OVERALL - OPERATING LEVEL PLAN

1/8" = 1'-0"

8' 4' 0' 8' 16'

1/8" = 1'-0"

COASTAL DEVELOPMENT PERMIT PLANS

| NO. | BY | CHK | APP | REVISIONS AND RECORD OF USE | DATE |
|---|---|---|---|---|---|
| B | KEZ | RT | EVB | 60% SUBMITTAL | 7/30/2019 |
| A | KEZ | RWF | EVB | 30% SUBMITTAL | 3/5/2019 |

BLACK & VEATCH
JOINT VENTURE
FILANC
BLACK & VEATCH

CITY OF MORRO BAY
MORRO BAY WATER
RECLAMATION FACILITY (WRF)

TREATMENT AREA - OVERALL
CIVIL-MECHANICAL
OPERATING LEVEL PLAN

DESIGNED: KEZ
DETAILED: MAK
CHECKED:
APPROVED:
DATE:

0 1/2 1
IF THIS BAR DOES NOT MEASURE 1" THEN DRAWING IS NOT TO FULL SCALE

PROJECT NO. 400530

30-M-101
SHEET
OF

PLOTTED: 7/29/2019 2:05:25 PM
D400530

NOTES:

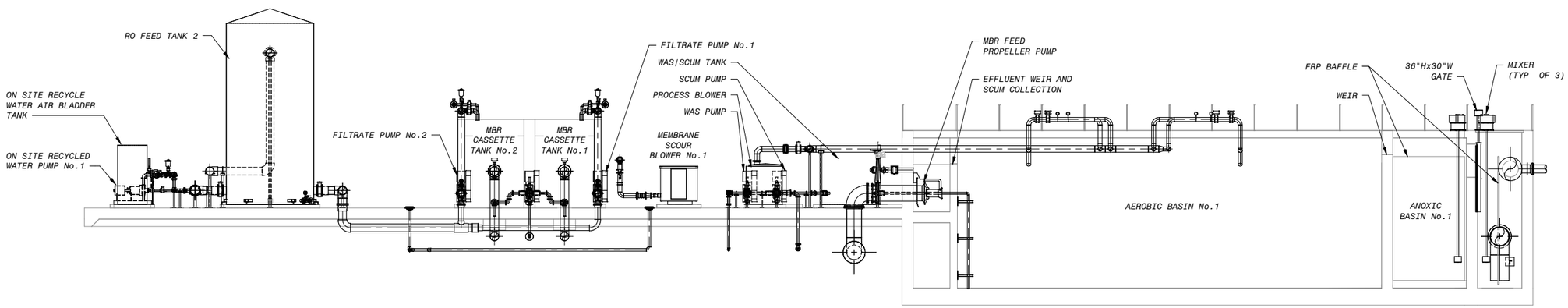


1 SECTION
30-M-101 1/8" = 1'-0"

8' 4' 0' 8' 16'
1/8" = 1'-0"

COASTAL DEVELOPMENT PERMIT PLANS

| NO. | BY | CHK | APP | DATE | REVISIONS AND RECORD OF USE |
|---|---|---|---|---|---|
| B | KEZ | RT | EVB | 7/30/2019 | 60% SUBMITTAL |
| A | KEZ | RWF | EVB | 3/5/2019 | 30% SUBMITTAL |

BLACK & VEATCH
JOINT VENTURE
FILANC
BLACK & VEATCH

CITY OF MORRO BAY
MORRO BAY WATER
RECLAMATION FACILITY (WRF)

TREATMENT AREA - OVERALL
CIVIL-MECHANICAL
SECTION

DESIGNED: Designer
DETAILED: Author
CHECKED: Checker
APPROVED: Approver
DATE:

0 1/2 1
IF THIS BAR DOES NOT MEASURE 1" THEN DRAWING IS NOT TO FULL SCALE

PROJECT NO.
400530

30-M-301
SHEET
OF

PLOTTED: 7/29/2019 2:05:30 PM
D400530

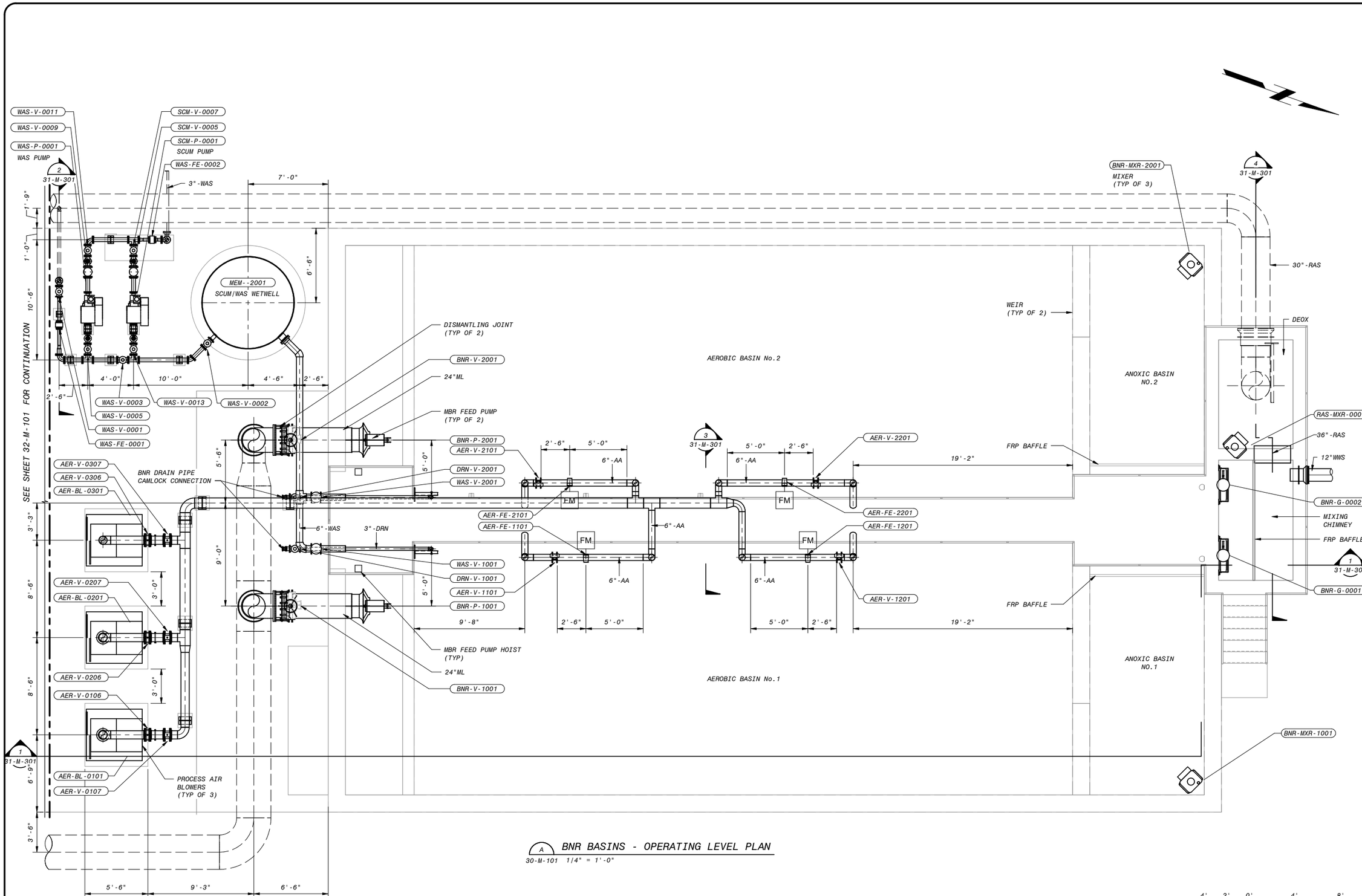


A BNR BASINS - OPERATING LEVEL PLAN
30-M-101 1/4" = 1'-0"

4' 2' 0' 4' 8'
1/4" = 1'-0"

# COASTAL DEVELOPMENT PERMIT PLANS

| NO. | BY | CHK | APP | DATE | REVISIONS AND RECORD OF USE |
|---|---|---|---|---|---|
| B | KEZ | RT | EVB | 7/30/2019 | 60% SUBMITTAL |
| A | KEZ | RWF | EVB | 3/5/2019 | 30% SUBMITTAL |

BLACK & VEATCH
JOINT VENTURE
FILANC
BLACK & VEATCH

CITY OF MORRO BAY
MORRO BAY WATER
RECLAMATION FACILITY (WRF)

TREATMENT AREA - BNR BASINS
CIVIL-MECHANICAL
OPERATING LEVEL PLAN

DESIGNED: Designer
DETAILED: Author
CHECKED: Checker
APPROVED: Approver
DATE:

0 1/2 1
IF THIS BAR DOES NOT MEASURE 1" THEN DRAWING IS NOT TO FULL SCALE

PROJECT NO.
400530

31-M-101
SHEET
OF

PLOTTED: 7/29/2019 2:05:33 PM
D400530

NOTES:

1. AERATION SYSTEM SUPPLIER SHALL PROVIDE CONNECTION TO AERATION DROP LEG IN THE LOCATION SHOWN.

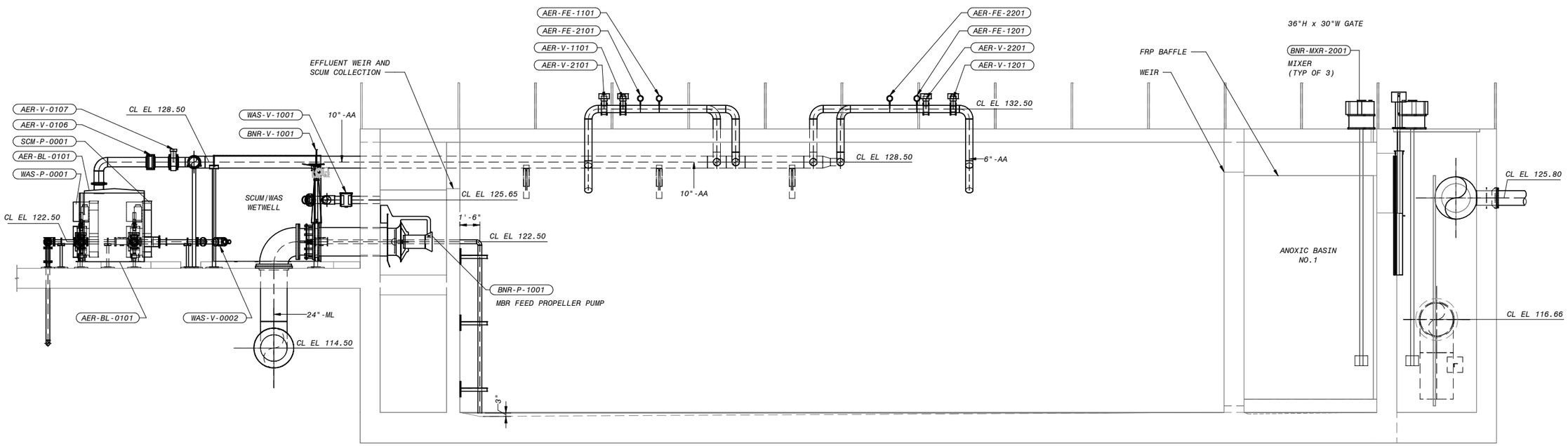


1 SECTION
31-M-101 1/4" = 1'-0"

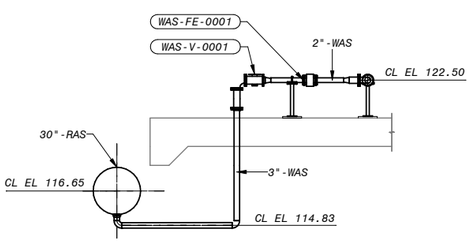


2 SECTION
31-M-101 1/4" = 1'-0"

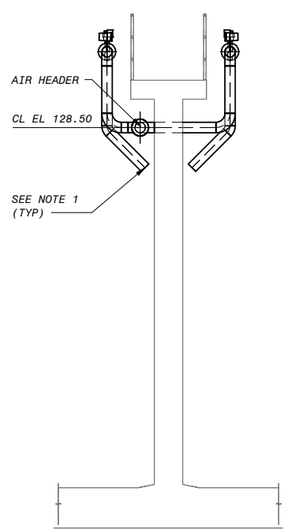


3 SECTION
31-M-101 1/4" = 1'-0"

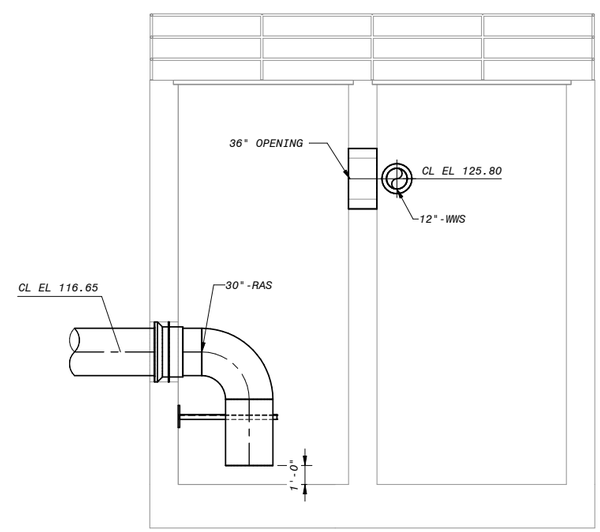


4 SECTION
31-M-101 1/4" = 1'-0"

4' 2' 0' 4' 8'
1/4" = 1'-0"

COASTAL DEVELOPMENT PERMIT PLANS

| NO. | BY | CHK | APP |
|---|---|---|---|
| B | KEZ | RT | EVB |
| A | KEZ | RWF | EVB |

| DATE | REVISIONS AND RECORD OF USE |
|---|---|
| 7/30/2019 | 60% SUBMITTAL |
| 3/5/2019 | 30% SUBMITTAL |

BLACK & VEATCH
JOINT VENTURE
FILANC
BLACK & VEATCH

CITY OF MORRO BAY
MORRO BAY WATER
RECLAMATION FACILITY (WRF)

TREATMENT AREA - BNR BASINS
CIVIL-MECHANICAL
SECTION AND DETAILS 1

DESIGNED: KEZ
DETAILED: MAK
CHECKED:
APPROVED:
DATE:

0 1/2 1
IF THIS BAR DOES NOT MEASURE 1" THEN DRAWING IS NOT TO FULL SCALE

PROJECT NO.
400530

31-M-301
SHEET
OF

PLOTTED: 7/29/2019 2:05:37 PM
D400530

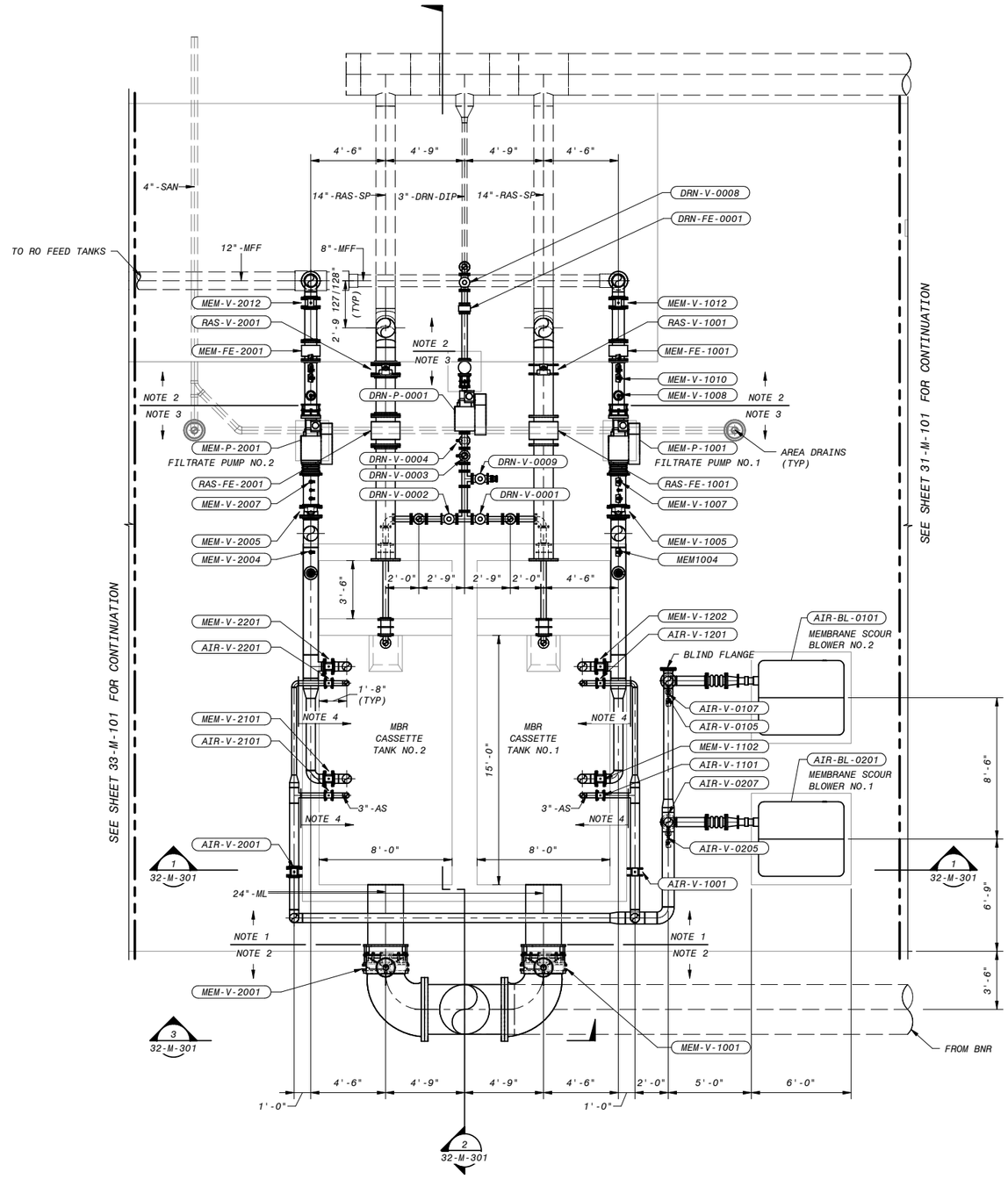


A MBR SYSTEM - OPERATING LEVEL PLAN
30-M-101 1/4" = 1'-0"

NOTES:

1. INFLUENT MANIFOLD AND PIPING PROVIDED BY MBR SYSTEM SUPPLIER.
2. DMJ AND PIPING IN DIRECTION OF ARROW PROVIDED BY OTHERS.
3. PUMP SUCTION PIPING, INSTRUMENTS AND OTHER ITEMS INDICATED ON THE P&IDS SHALL BE SUPPLIED AND DESIGNED BY THE MBR SYSTEM SUPPLIER.
4. PIPING AND AERATION CONNECTIONS PROVIDED BY MBR SYSTEM SUPPLIER.

4' 2' 0' 4' 8'
1/4" = 1'-0"

COASTAL DEVELOPMENT PERMIT PLANS

| NO. | BY | CHK | APP | DATE | REVISIONS AND RECORD OF USE |
|---|---|---|---|---|---|
| B | KEZ | RT | EVB | 7/30/2019 | 60% SUBMITTAL |
| A | KEZ | RWF | EVB | 3/5/2019 | 30% SUBMITTAL |

BLACK & VEATCH
JOINT VENTURE
FILANC
BLACK & VEATCH

CITY OF MORRO BAY
MORRO BAY WATER
RECLAMATION FACILITY (WRF)

TREATMENT AREA - MBR SYSTEM
CIVIL-MECHANICAL
OPERATING LEVEL PLAN

DESIGNED: Designer
DETAILED: Author
CHECKED: Checker
APPROVED: Approver
DATE:

0 1/2 1
IF THIS BAR DOES NOT MEASURE 1" THEN DRAWING IS NOT TO FULL SCALE

PROJECT NO.
400530

32-M-101
SHEET
OF

PLOTTED: 7/29/2019 2:05:41 PM
D400530

NOTES:

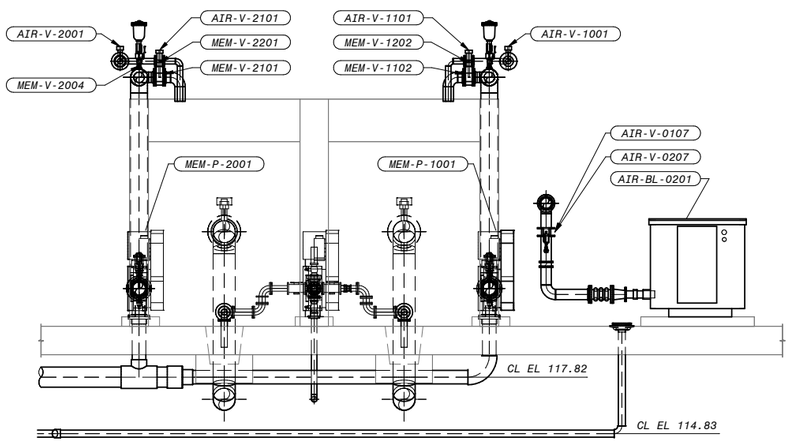


1 SECTION
32-M-101 1/4" = 1'-0"

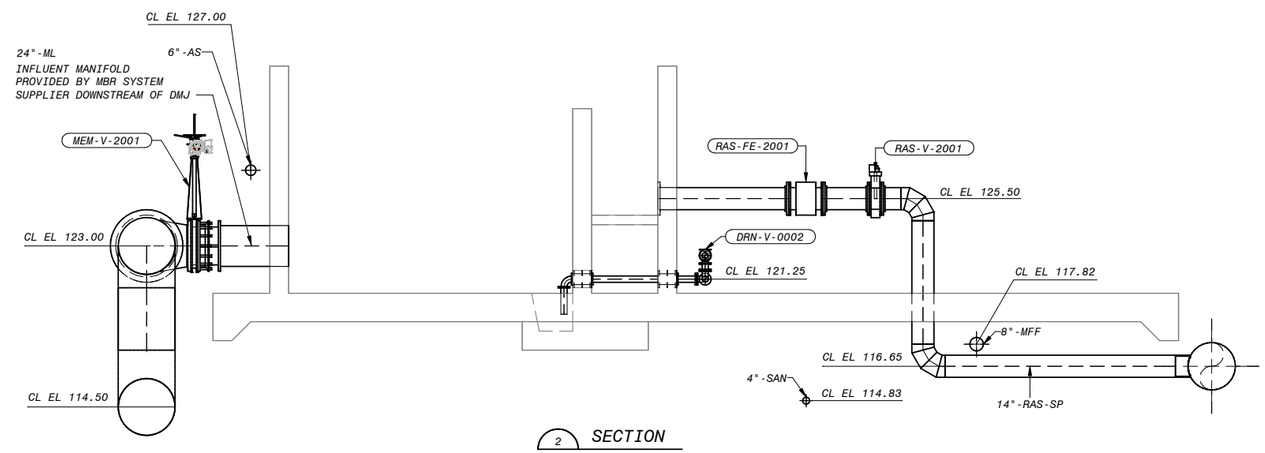


2 SECTION
32-M-101 1/4" = 1'-0"

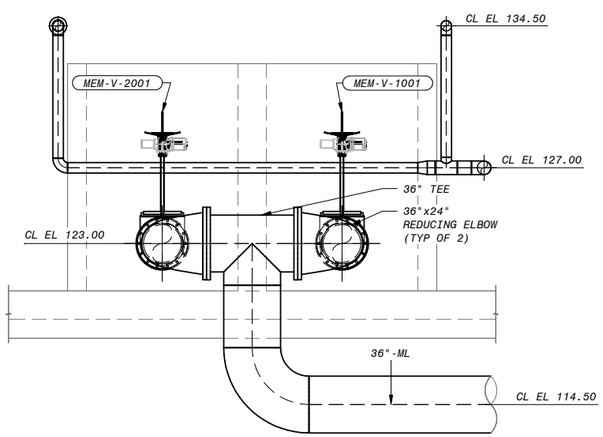


3 SECTION
32-M-101 1/4" = 1'-0"

4' 2' 0' 4' 8'
1/4" = 1'-0"

COASTAL DEVELOPMENT PERMIT PLANS

| NO. | BY | CHK | APP |
|---|---|---|---|
| B | KEZ | RT | EVB |
| A | KEZ | RWF | EVB |

| DATE | REVISIONS AND RECORD OF USE |
|---|---|
| 7/30/2019 | 60% SUBMITTAL |
| 3/5/2019 | 30% SUBMITTAL |

BLACK & VEATCH
JOINT VENTURE
FILANC
BLACK & VEATCH

CITY OF MORRO BAY
MORRO BAY WATER
RECLAMATION FACILITY (WRF)

TREATMENT AREA - MBR SYSTEM
CIVIL-MECHANICAL
SECTION

DESIGNED: Designer
DETAILED: Author
CHECKED: Checker
APPROVED: Approver
DATE:

0 1/2 1
IF THIS BAR DOES NOT MEASURE 1" THEN DRAWING IS NOT TO FULL SCALE

PROJECT NO.
400530

32-M-301
SHEET
OF

PLOTTED: 7/29/2019 2:05:45 PM
D400530

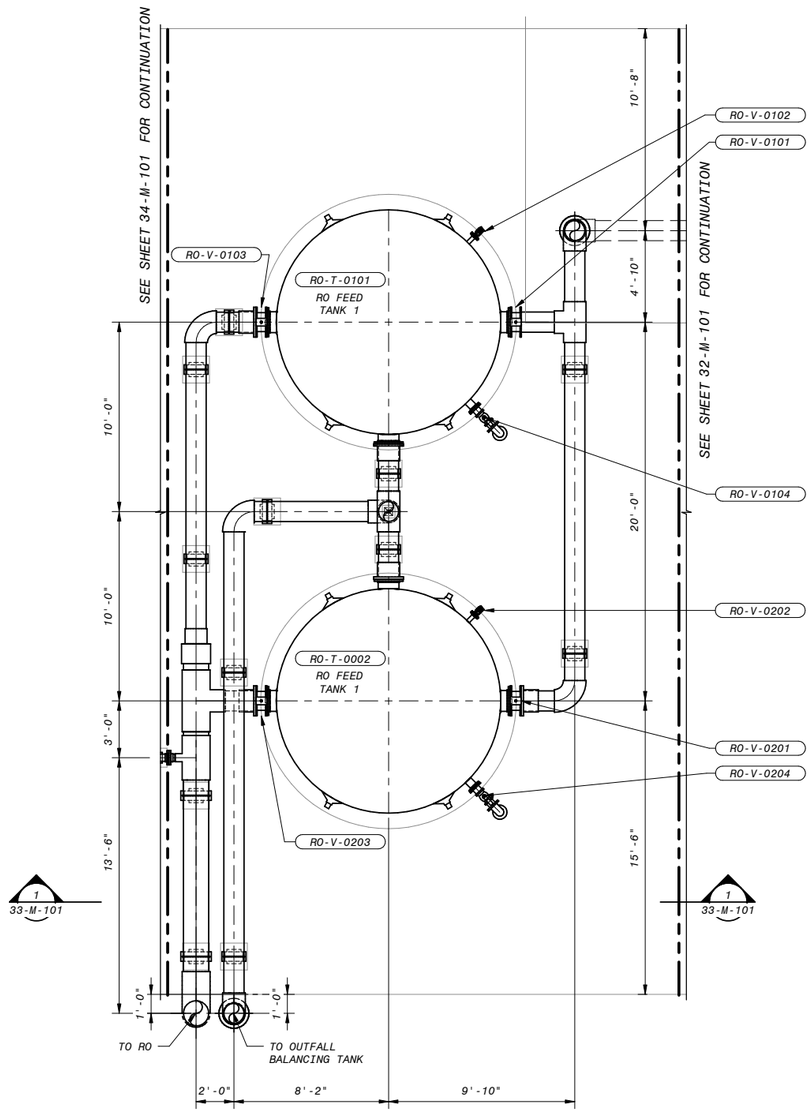


A RO FEED TANKS - OPERATING LEVEL PLAN
30-M-101 1/4" = 1'-0"

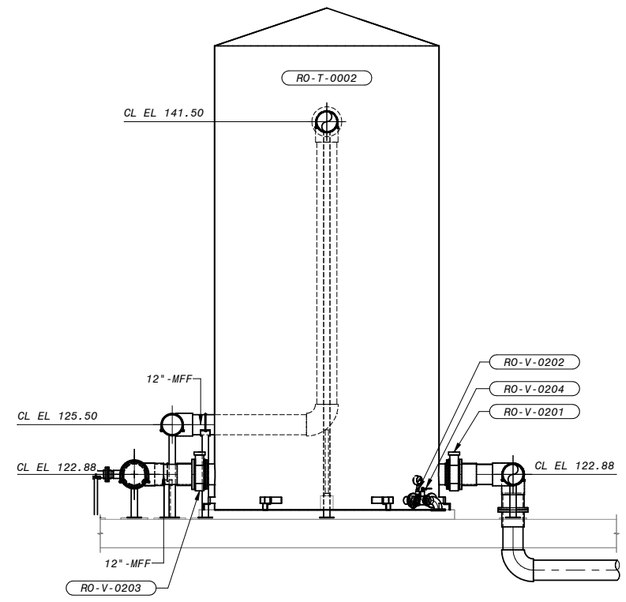


1 SECTION
33-M-101 1/4" = 1'-0"

NOTES:

| NO. | BY | CHK | APP | DATE | REVISIONS AND RECORD OF USE |
|---|---|---|---|---|---|
| B | KEZ | RT | EVB | 7/30/2019 | 60% SUBMITTAL |
| A | KEZ | RWF | EVB | 3/5/2019 | 30% SUBMITTAL |

BLACK & VEATCH

JOINT VENTURE

FILANC

BLACK & VEATCH

CITY OF MORRO BAY
MORRO BAY WATER
RECLAMATION FACILITY (WRF)

TREATMENT AREA - RO FEED TANKS
CIVIL-MECHANICAL
OPERATING LEVEL PLAN AND SECTIONS

DESIGNED: Designer
DETAILED: Author
CHECKED: Checker
APPROVED: Approver
DATE:

0 1/2 1
IF THIS BAR DOES NOT MEASURE 1" THEN DRAWING IS NOT TO FULL SCALE

PROJECT NO.
400530

33-M-101
SHEET
OF

4' 2' 0' 4' 8'
1/4" = 1'-0"

COASTAL DEVELOPMENT PERMIT PLANS

PLOTTED: 7/29/2019 2:05:47 PM
D400530

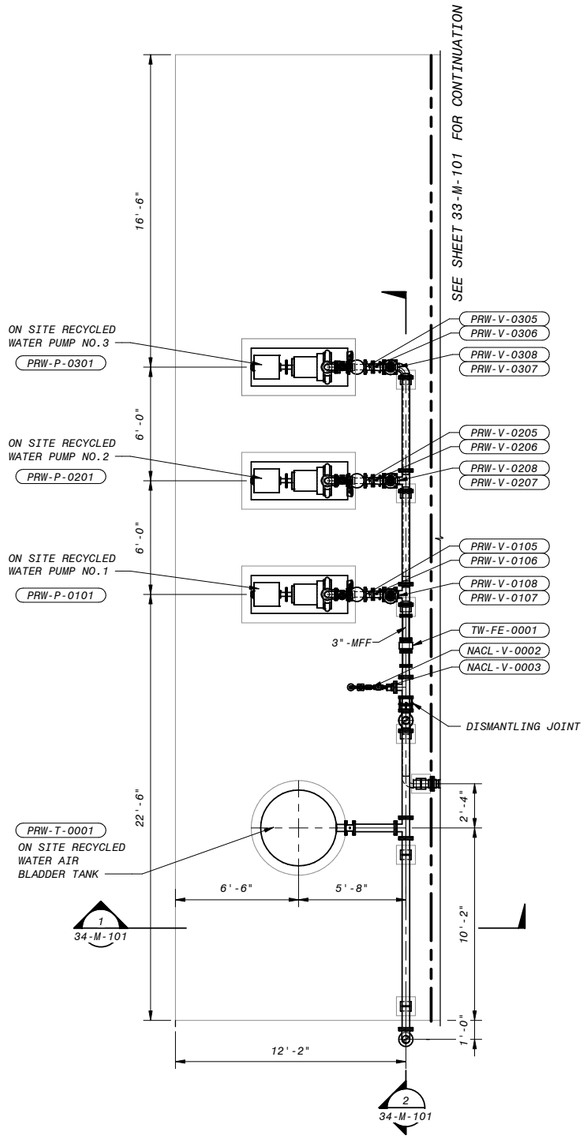


RECYCLED WATER PUMP STATION - OPERATING LEVEL PLAN

A 30-M-101 1/4" = 1'-0"

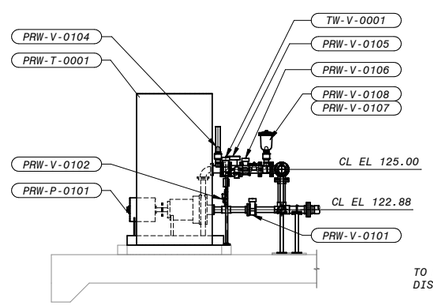


1 SECTION

34-M-101 1/4" = 1'-0"

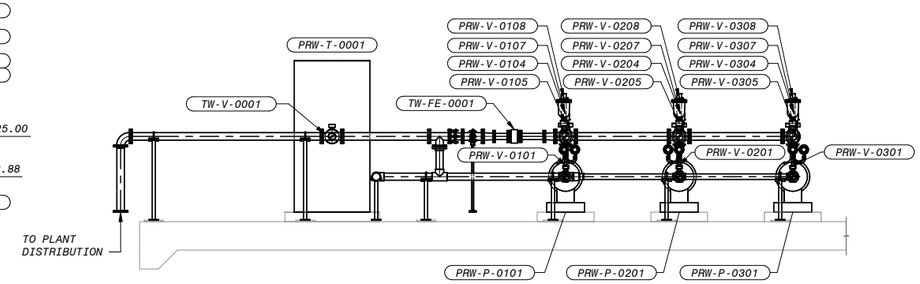


2 SECTION

34-M-101 1/4" = 1'-0"

NOTES:

4' 2' 0' 4' 8'

1/4" = 1'-0"

COASTAL DEVELOPMENT PERMIT PLANS

| NO. | BY | CHK | APP |
|---|---|---|---|
| B | KEZ | RT | EVB |
| A | KEZ | RWF | EVB |

| DATE | REVISIONS AND RECORD OF USE |
|---|---|
| 7/30/2019 | 60% SUBMITTAL |
| 3/5/2019 | 30% SUBMITTAL |

BLACK & VEATCH

JOINT VENTURE

FILANC

BLACK & VEATCH

CITY OF MORRO BAY
MORRO BAY WATER
RECLAMATION FACILITY (WRF)

TREATMENT AREA - RECYCLED WATER PUMP STATION
CIVIL-MECHANICAL
OPERATING LEVEL PLAN AND SECTIONS

DESIGNED: Designer
DETAILED: Author
CHECKED: Checker
APPROVED: Approver
DATE:

0 1/2 1

IF THIS BAR DOES NOT MEASURE 1" THEN DRAWING IS NOT TO FULL SCALE

PROJECT NO. 400530

34-M-101

SHEET OF

PLOTTED: 7/29/2019 2:05:50 PM

D400530

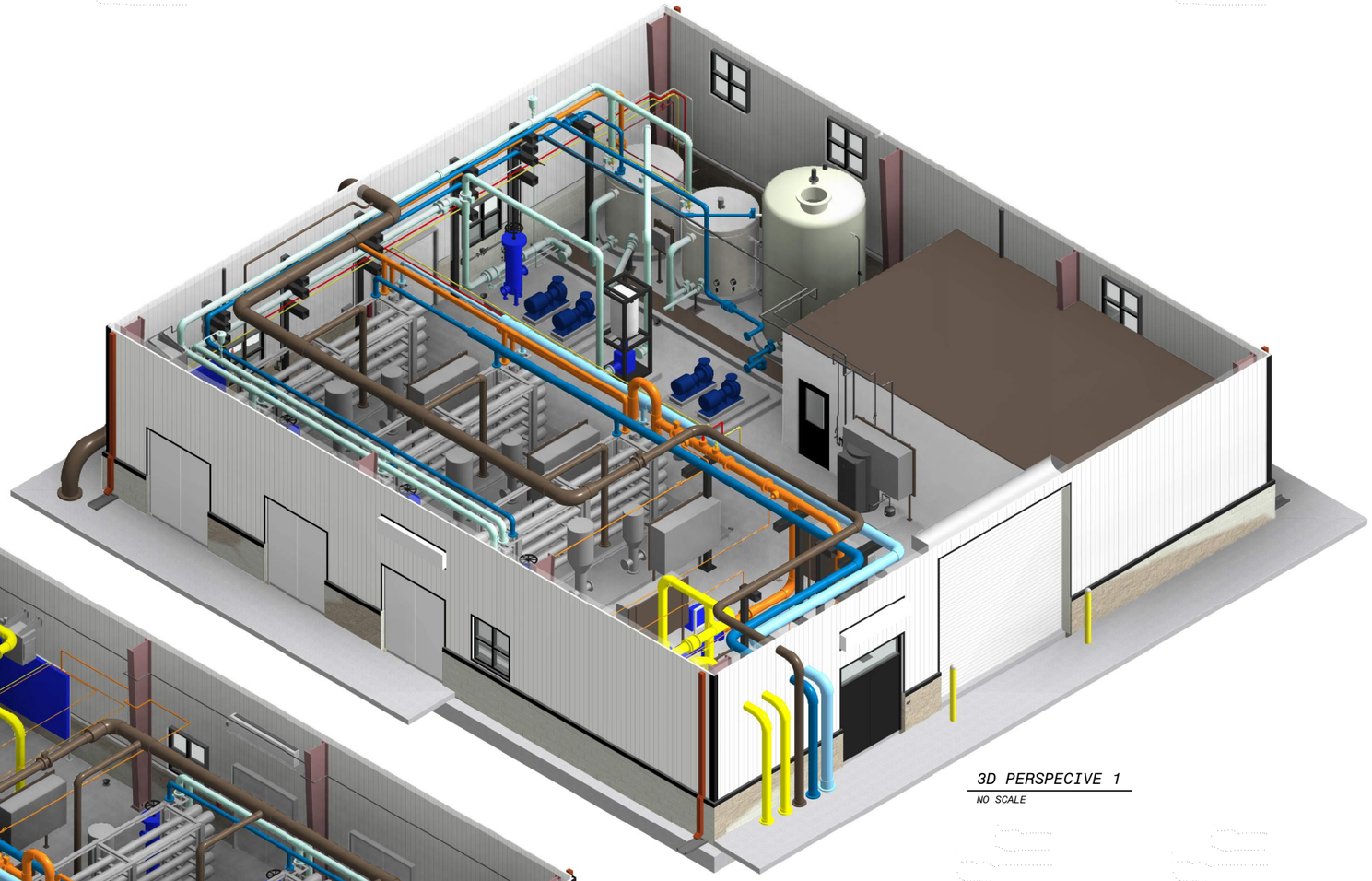

3D PERSPECIVE 1

NO SCALE

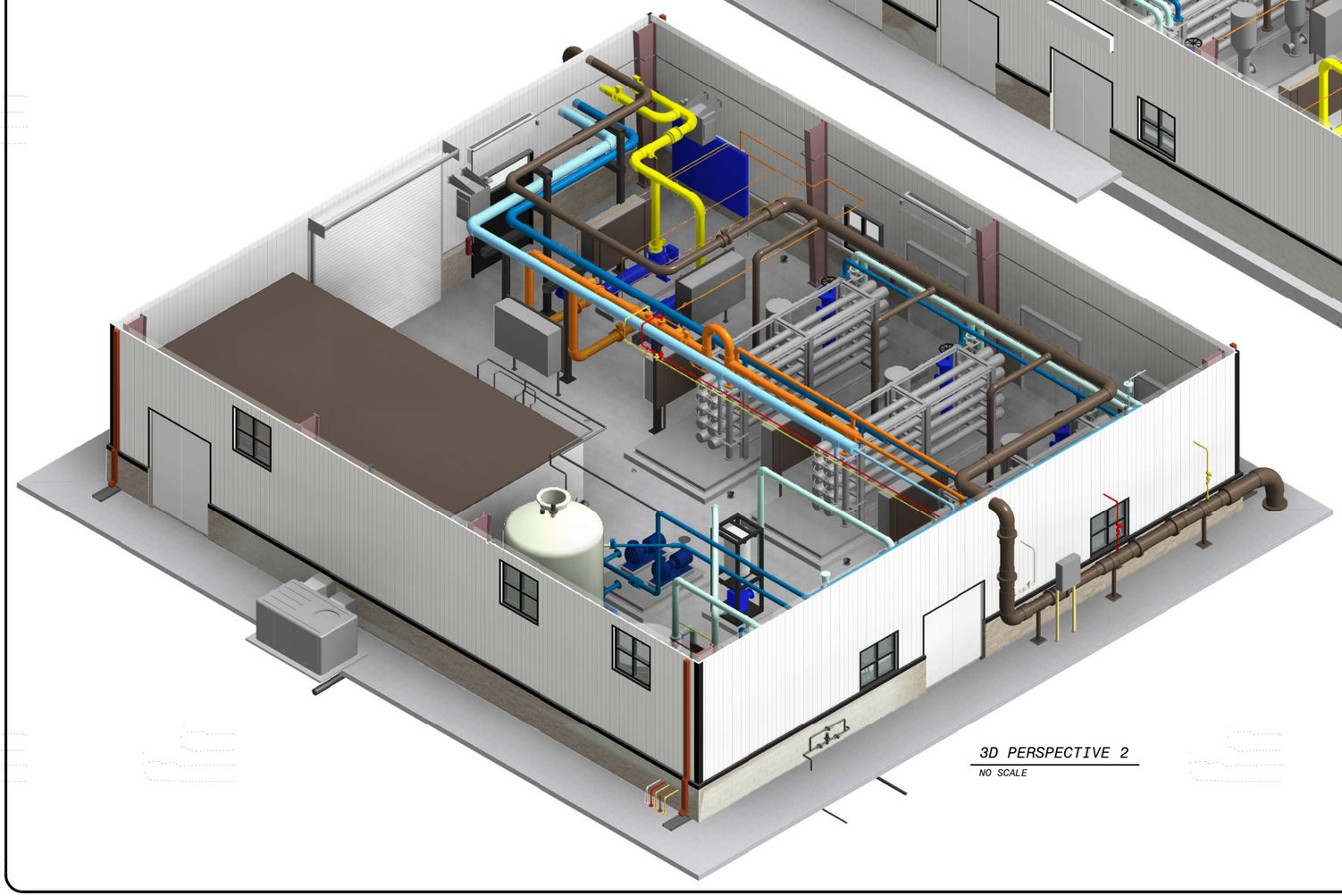

3D PERSPECTIVE 2

NO SCALE

# COASTAL DEVELOPMENT PERMIT PLANS

| DATE | REVISIONS AND RECORD OF USE | NO. | BY | CHK | APP |
|---|---|---|---|---|---|
| 7/30/2019 | 60% SUBMITTAL | B | ADV | RT | EVB |
| 3/5/2019 | 30% SUBMITTAL | A | ADV | RWF | EVB |

BLACK & VEATCH

JOINT VENTURE

FILANC

BLACK & VEATCH

CITY OF MORRO BAY
MORRO BAY WATER
RECLAMATION FACILITY (WRF)

RO/UV BUILDING - OVERALL
CIVIL-MECHANICAL
3D VIEWS

DESIGNED: ADV
DETAILED: MAK
CHECKED:
APPROVED:
DATE:

0 1/2 1

IF THIS BAR DOES NOT MEASURE 1" THEN DRAWING IS NOT TO FULL SCALE

PROJECT NO.
400530

50-M-001

SHEET
OF XXX

PLOTTED: 30-07-2019 16:54:17

D400530

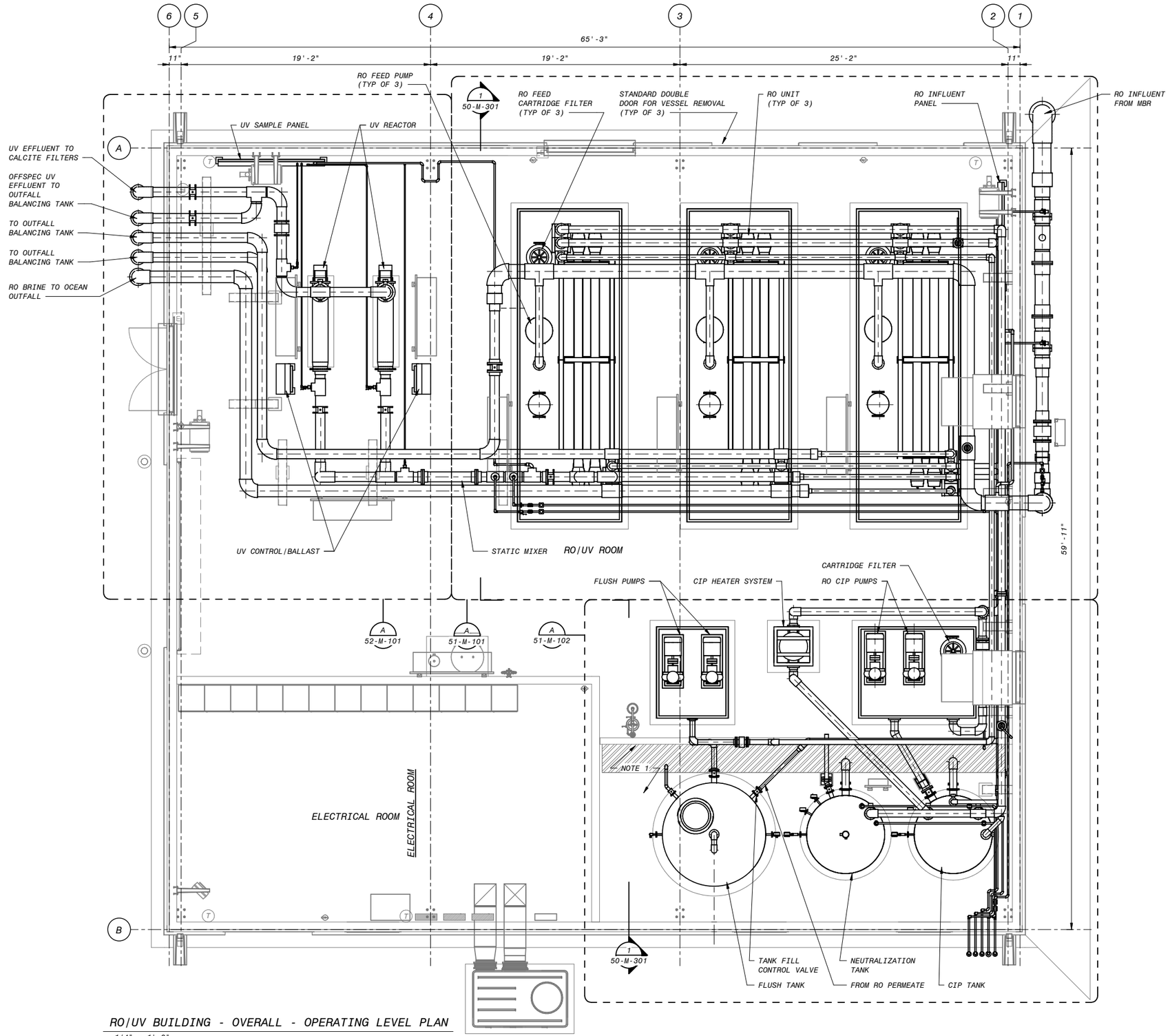


RO/UV BUILDING - OVERALL - OPERATING LEVEL PLAN

1/4" = 1'-0"

NOTES:

1. TANK CONTAINMENT AREA TO BE COATED PER THE REQUIREMENTS OF SPECIFICATION 099724.

| NO. | BY | CHK | APP | REVISIONS AND RECORD OF USE | DATE |
|---|---|---|---|---|---|
| B | ADV | RT | EVB | 60% SUBMITTAL | 7/30/2019 |
| A | ADV | RWF | EVB | 30% SUBMITTAL | 3/5/2019 |

BLACK & VEATCH JOINT VENTURE

FILANC

BLACK & VEATCH

CITY OF MORRO BAY
MORRO BAY WATER RECLAMATION FACILITY (WRF)

RO/UV BUILDING - OVERALL CIVIL-MECHANICAL OPERATING LEVEL PLAN

DESIGNED: ADV
DETAILED: MAK
CHECKED:
APPROVED:
DATE:

0 1/2 1
IF THIS BAR DOES NOT MEASURE 1" THEN DRAWING IS NOT TO FULL SCALE

PROJECT NO. 400530

50-M-101
SHEET OF XXX

4' 2' 0' 4' 8'
1/4" = 1'-0"

COASTAL DEVELOPMENT PERMIT PLANS

PLOTTED: 30-07-2019 16:54:21
D400530

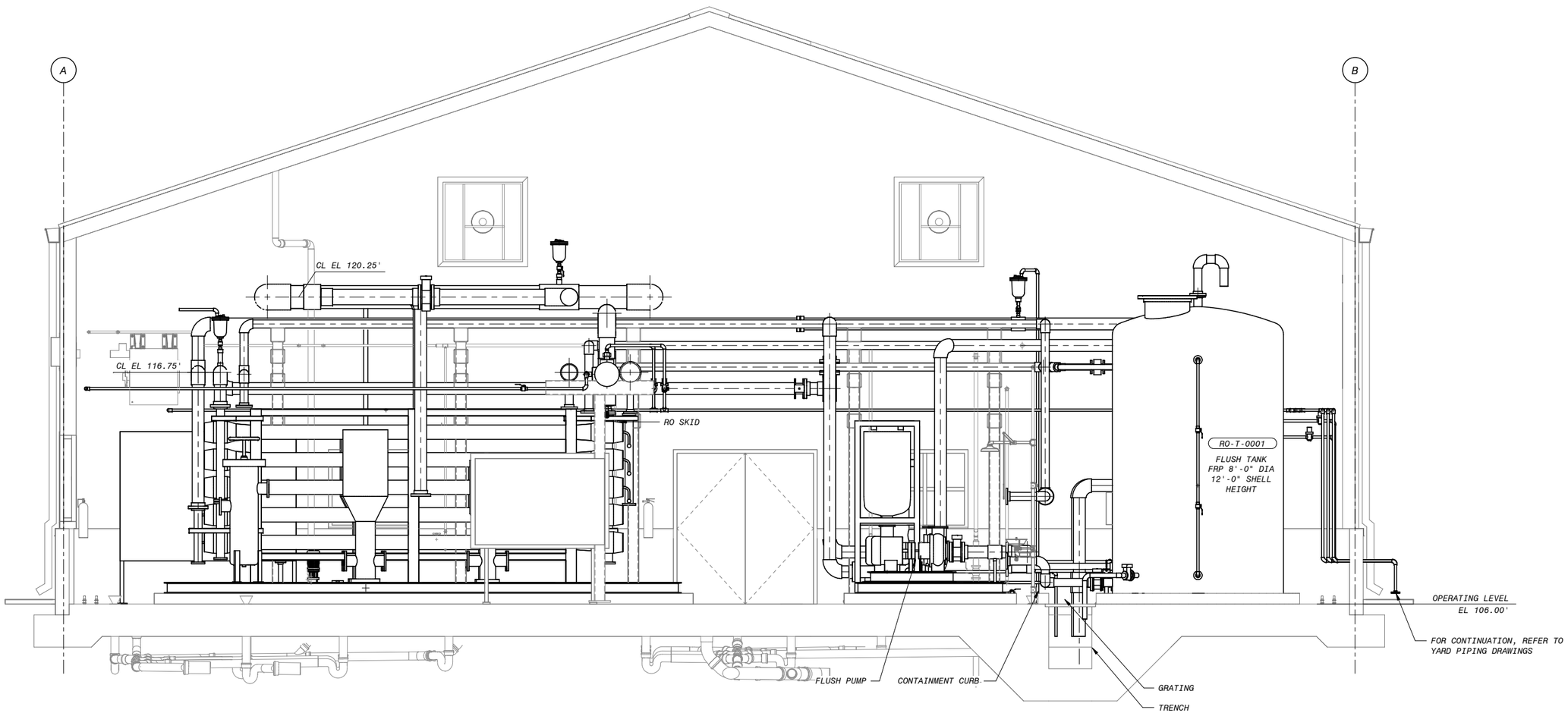


1 SECTION
50-M-101 3/8" = 1'-0"

| NO. | BY | CHK | APP | REVISIONS AND RECORD OF USE | DATE |
|---|---|---|---|---|---|
| B | ADV | RT | EVB | 60% SUBMITTAL | 7/30/2019 |
| A | ADV | RWF | EVB | 30% SUBMITTAL | 3/5/2019 |

BLACK & VEATCH
JOINT VENTURE
FILANC
BLACK & VEATCH

CITY OF MORRO BAY
MORRO BAY WATER
RECLAMATION FACILITY (WRF)

RO/UV BUILDING - OVERALL
CIVIL-MECHANICAL
SECTION

DESIGNED: ADV
DETAILED: MAK
CHECKED:
APPROVED:
DATE:

0 1/2 1
IF THIS BAR DOES NOT MEASURE 1" THEN DRAWING IS NOT TO FULL SCALE

PROJECT NO.
400530

50-M-301
SHEET
OF XXX

12" 0' 1' 2' 3' 4' 5' 6' 7'
3/8" = 1'-0"

COASTAL DEVELOPMENT PERMIT PLANS

PLOTTED: 30-07-2019 16:54:25
D400530

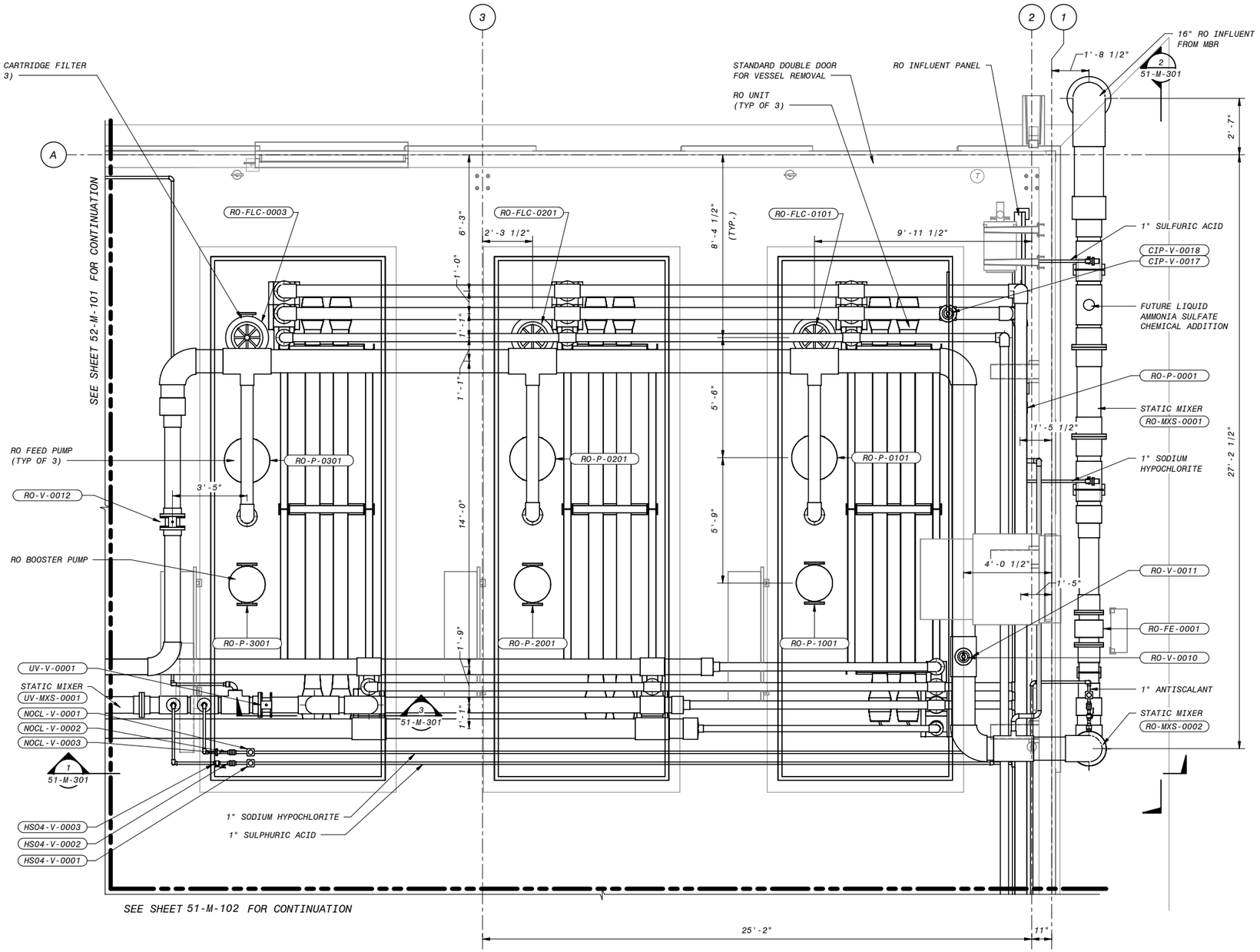


A RO SYSTEM - MEMBRANE RACKS PLAN
50-M-101 3/8" = 1'-0"

NOTES:

1. RO CONFIGURATION AND CONNECTION LOCATIONS TO BE FINALIZED WHEN EQUIPMENT SELECTED.

| DATE | REVISIONS AND RECORD OF USE | NO. | BY | CHK | APP |
|---|---|---|---|---|---|
| 7/30/2019 | 60% SUBMITTAL | B | ADV | RT | EVB |
| 3/5/2019 | 30% SUBMITTAL | A | ADV | RWF | EVB |

BLACK & VEATCH
JOINT VENTURE
FILANC
BLACK & VEATCH

CITY OF MORRO BAY
MORRO BAY WATER
RECLAMATION FACILITY (WRF)

RO/UV BUILDING - RO SYSTEM
CIVIL-MECHANICAL
MEMBRANE RACKS PLAN

DESIGNED: ADV
DETAILED: RMB
CHECKED:
APPROVED:
DATE:

0 1/2 1
IF THIS BAR DOES NOT MEASURE 1" THEN DRAWING IS NOT TO FULL SCALE

PROJECT NO.
400530

51-M-101
SHEET
OF XXX

12" 0' 1' 2' 3' 4' 5' 6' 7'
3/8" = 1'-0"

COASTAL DEVELOPMENT PERMIT PLANS

PLOTTED: 30-07-2019 16:54:27
D400530

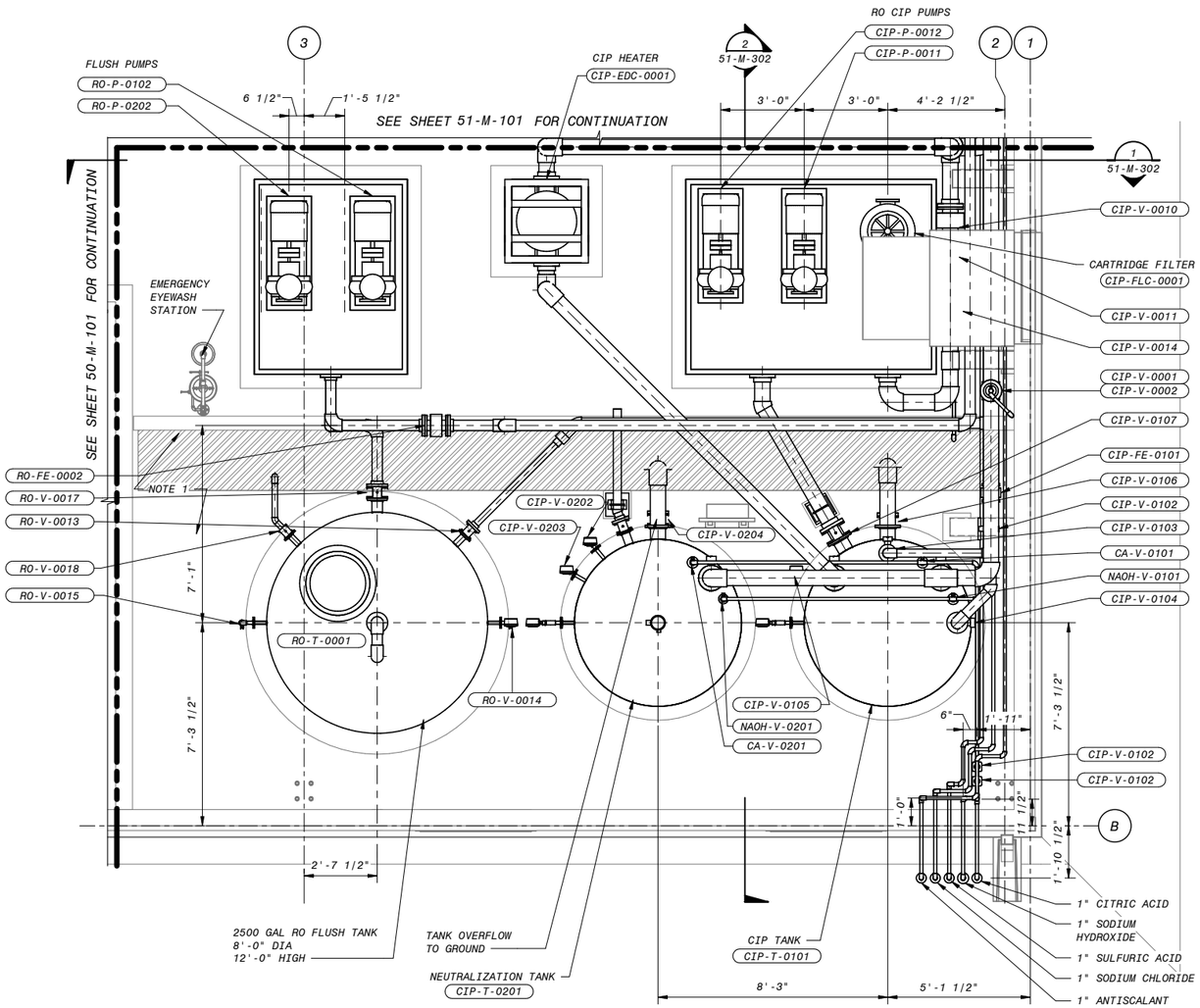


A RO SYSTEM - CIP & FLUSH SYSTEMS PLAN

50-M-101 3/8" = 1'-0"

NOTES:

1. CIP TANK AREA AND CONTAINMENT TRENCH TO BE COATED PER REQUIREMENTS OF CORROSION PROTECTION SYSTEMS SPECIFICATIONS.

| NO. | BY | CHK | APP |
|---|---|---|---|
| B | ADV | RT | EVB |
| A | ADV | RWF | EVB |

| DATE | REVISIONS AND RECORD OF USE |
|---|---|
| 7/30/2019 | 60% SUBMITTAL |
| 3/5/2019 | 30% SUBMITTAL |

BLACK & VEATCH
JOINT VENTURE
FILANC
BLACK & VEATCH

CITY OF MORRO BAY
MORRO BAY WATER
RECLAMATION FACILITY (WRF)

RO/UV BUILDING - RO SYSTEM
CIVIL-MECHANICAL
CIP & FLUSH SYSTEMS PLAN

DESIGNED: Designer
DETAILED: Author
CHECKED: Checker
APPROVED: Approver
DATE:

0 1/2 1
IF THIS BAR DOES NOT MEASURE 1" THEN DRAWING IS NOT TO FULL SCALE

PROJECT NO.
400530

51-M-102
SHEET
OF XXX

12" 0' 1' 2' 3' 4' 5' 6' 7'
3/8" = 1'-0"

COASTAL DEVELOPMENT PERMIT PLANS

PLOTTED: 30-07-2019 16:54:29
D400530

NOTES:

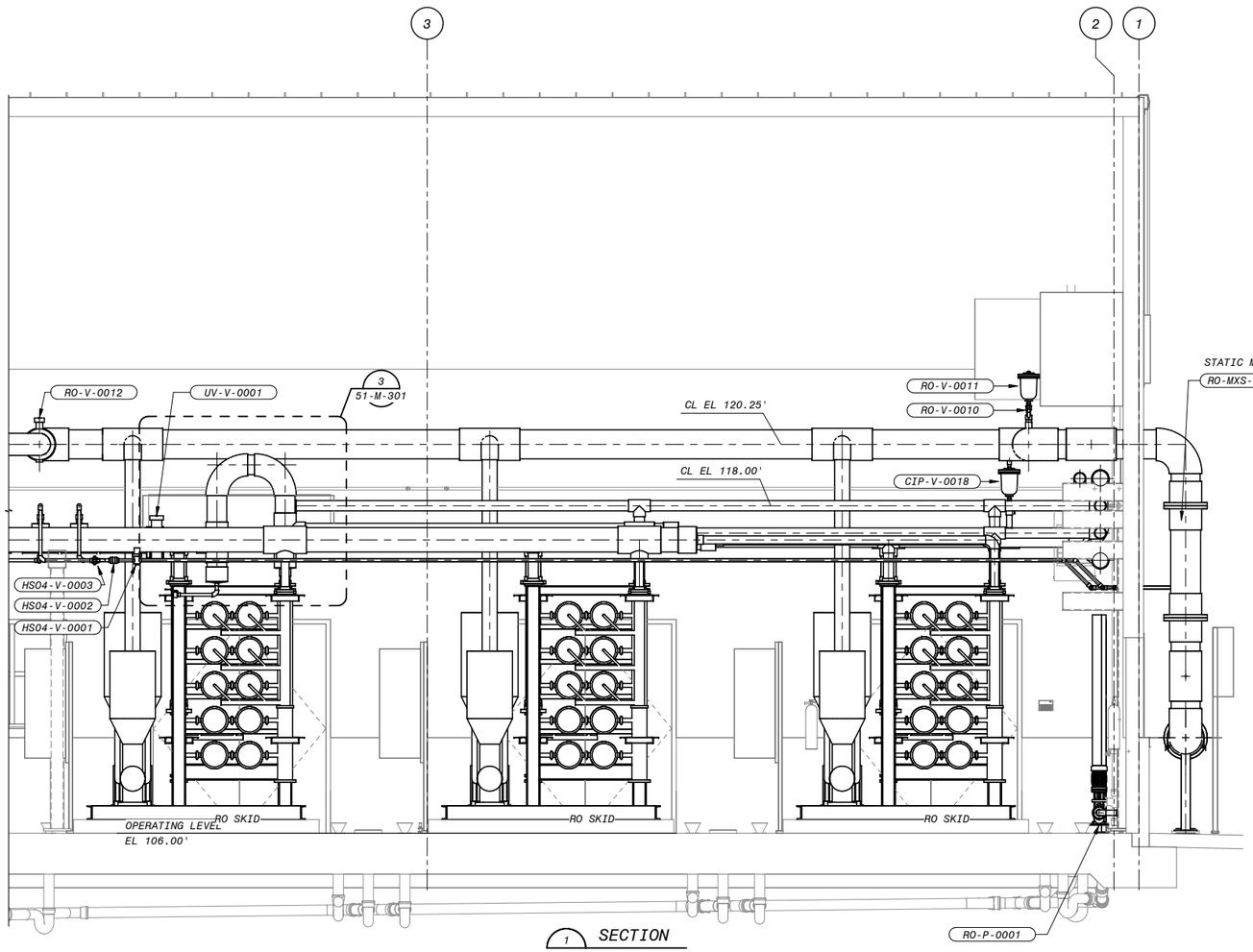


1 SECTION
51-M-101 3/8" = 1'-0"

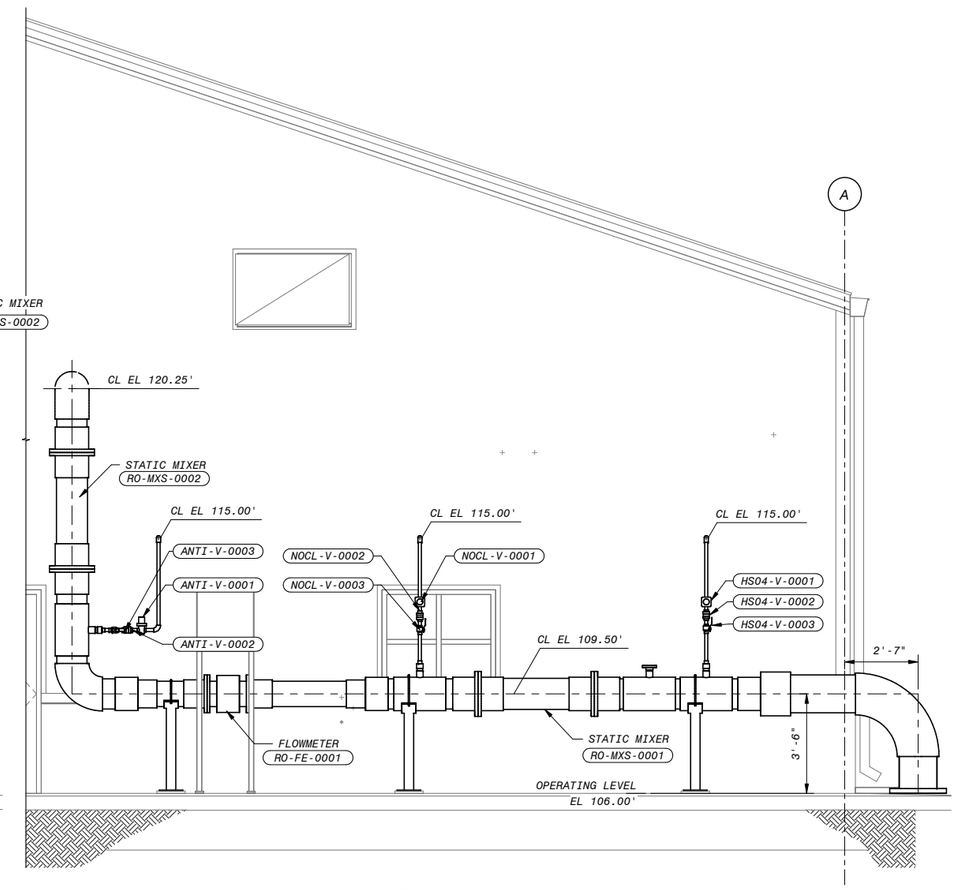


2 SECTION
51-M-101 3/8" = 1'-0"

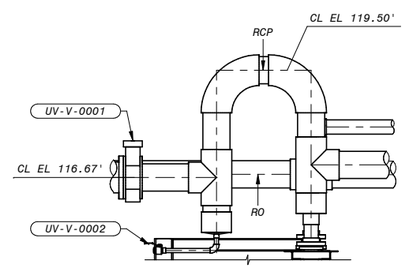


BACKFLOW PREVENTION LOOP

3 SECTION
51-M-101 1/2" = 1'-0"

12' 6' 0' 1' 2' 3' 4' 5'
1/2" = 1'-0"

12" 0' 1' 2' 3' 4' 5' 6' 7'
3/8" = 1'-0"

# COASTAL DEVELOPMENT PERMIT PLANS

| NO. | BY | CHK | APP |
|---|---|---|---|
| B | ADV | RT | EVB |
| A | ADV | RWF | EVB |

| DATE | REVISIONS AND RECORD OF USE |
|---|---|
| 7/30/2019 | 60% SUBMITTAL |
| 3/5/2019 | 30% SUBMITTAL |

BLACK & VEATCH

JOINT VENTURE

FILANC

BLACK & VEATCH

CITY OF MORRO BAY
MORRO BAY WATER
RECLAMATION FACILITY (WRF)

RO-UV BUILDING - RO SYSTEM
CIVIL-MECHANICAL
SECTIONS AND DETAILS 1

DESIGNED: Designer
DETAILED: Author
CHECKED: Checker
APPROVED: Approver
DATE:

0 1/2 1
IF THIS BAR DOES NOT MEASURE 1" THEN DRAWING IS NOT TO FULL SCALE

PROJECT NO.
400530

51-M-301
SHEET
OF XXX

PLOTTED: 30-07-2019 16:54:33
D400530

NOTES:

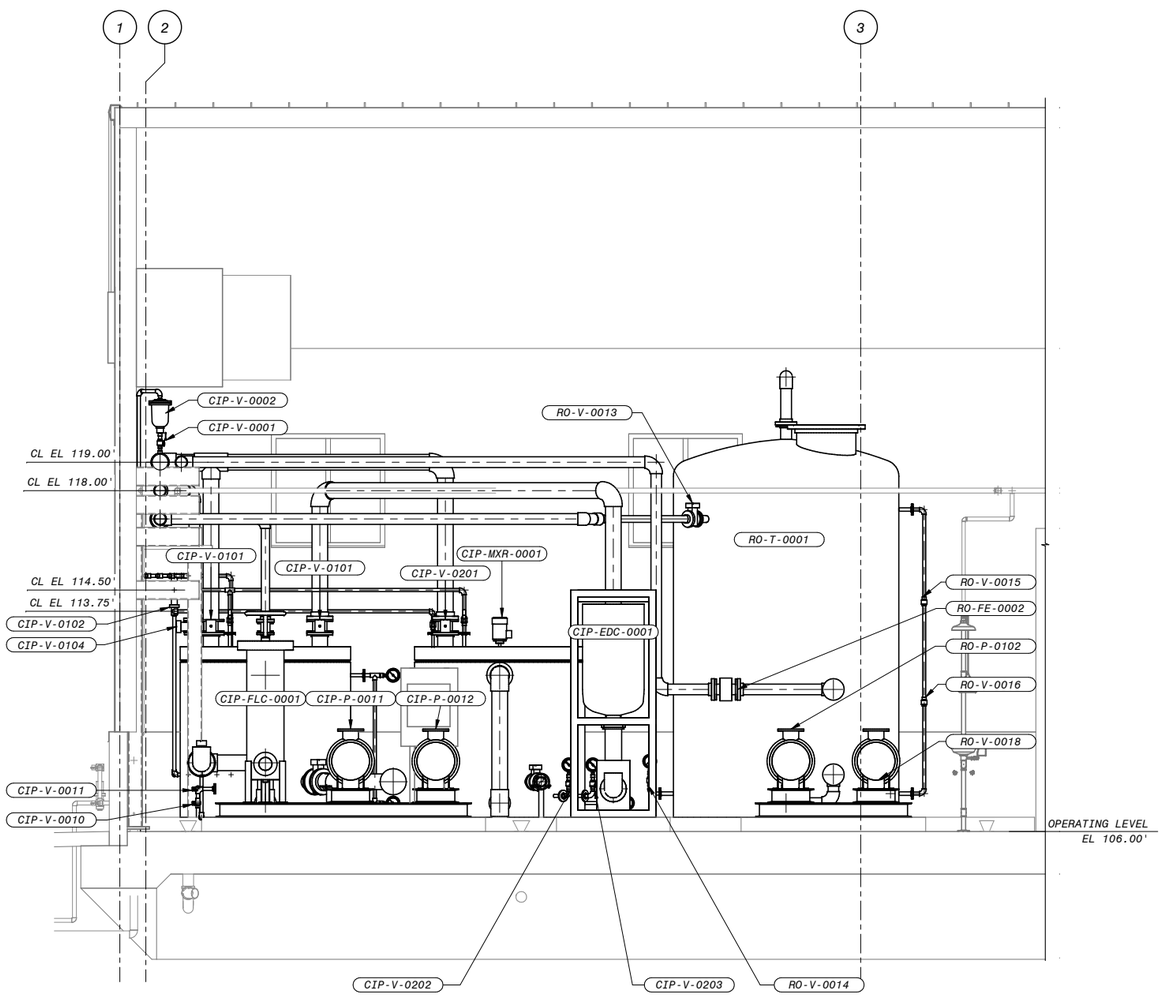


1 SECTION
51-M-102 3/8" = 1'-0"

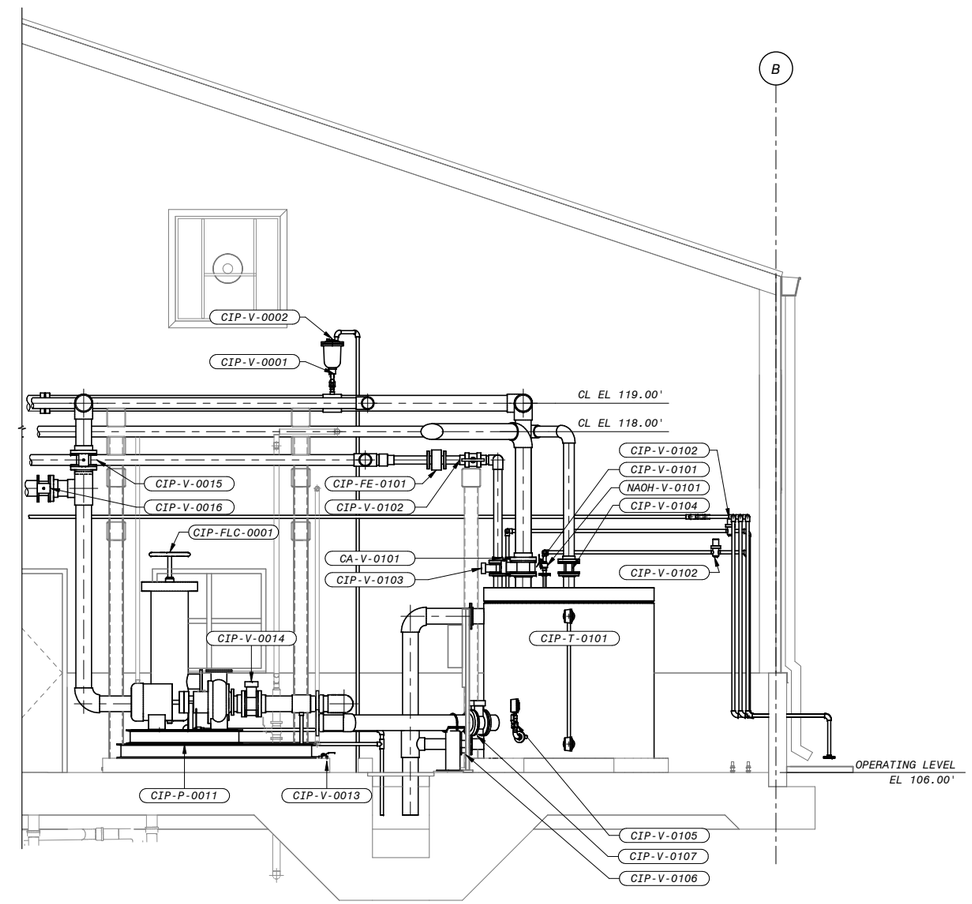


2 SECTION
51-M-102 3/8" = 1'-0"

12" 0' 1' 2' 3' 4' 5' 6' 7'
3/8" = 1'-0"

COASTAL DEVELOPMENT PERMIT PLANS

| NO. | DATE | REVISIONS AND RECORD OF USE | BY | CHK | APP |
|---|---|---|---|---|---|
| B | 7/30/2019 | 60% SUBMITTAL | ADV | RT | EVB |
| A | 3/5/2019 | 30% SUBMITTAL | ADV | RWF | EVB |

BLACK & VEATCH
JOINT VENTURE
FILANC
BLACK & VEATCH

CITY OF MORRO BAY
MORRO BAY WATER
RECLAMATION FACILITY (WRF)

RO/UV BUILDING - RO SYSTEM
CIVIL-MECHANICAL
SECTIONS AND DETAILS 2

DESIGNED: Designer
DETAILED: Author
CHECKED: Checker
APPROVED: Approver
DATE:

0 1/2 1
IF THIS BAR DOES NOT MEASURE 1" THEN DRAWING IS NOT TO FULL SCALE

PROJECT NO.
400530

51-M-302
SHEET
OF XXX

PLOTTED: 30-07-2019 16:54:36
D400530

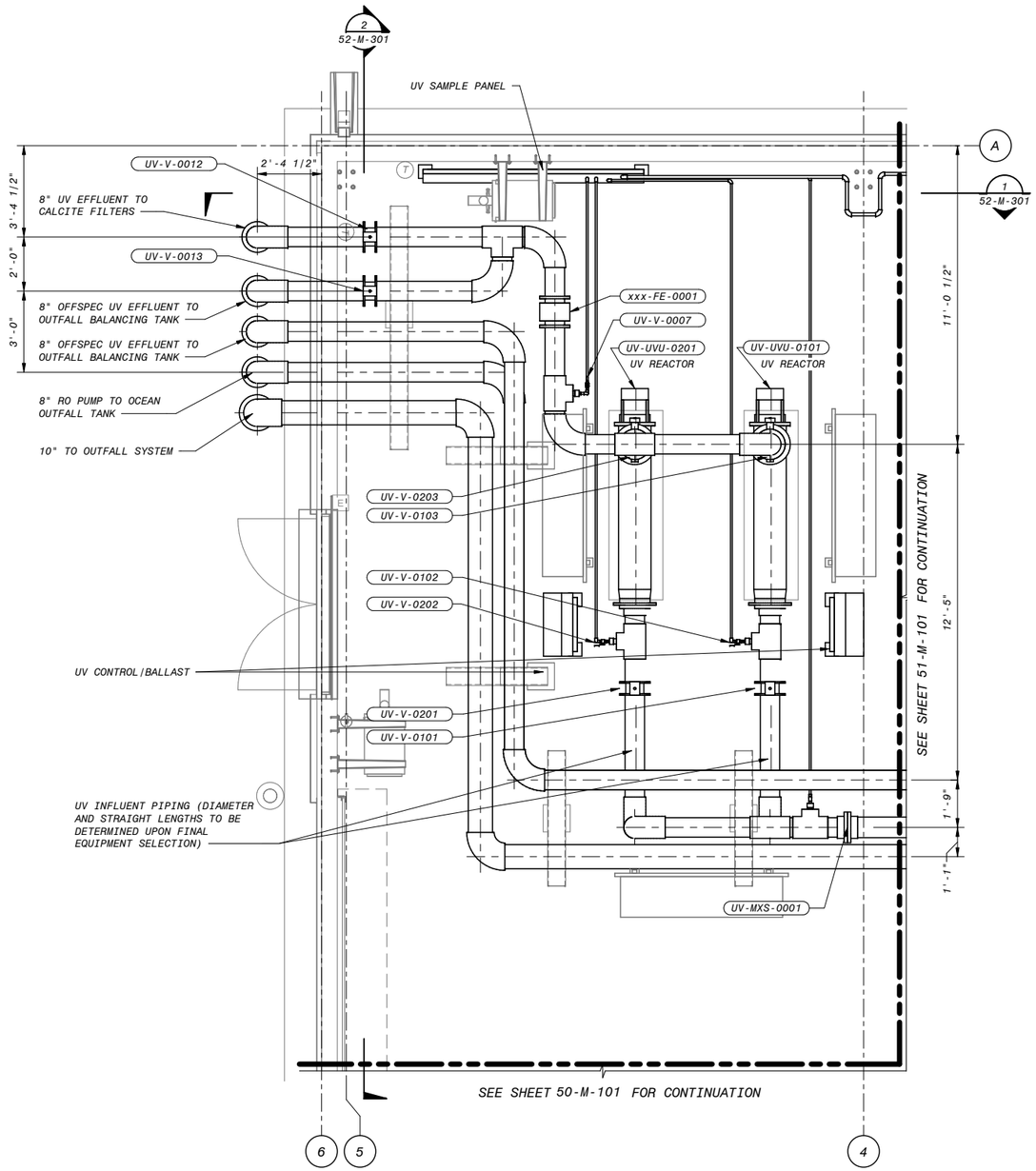


A UV SYSTEM - REACTOR SYSTEM PLAN
50-M-101 3/8" = 1'-0"

NOTES:

12" 0' 1' 2' 3' 4' 5' 6' 7'
3/8" = 1'-0"

COASTAL DEVELOPMENT PERMIT PLANS

| NO. | BY | CHK | APP | REVISIONS AND RECORD OF USE | DATE |
|---|---|---|---|---|---|
| B | ADV | RT | EVB | 60% SUBMITTAL | 7/30/2019 |
| A | ADV | RWF | EVB | 30% SUBMITTAL | 3/5/2019 |

BLACK & VEATCH
JOINT VENTURE
FILANC
BLACK & VEATCH

CITY OF MORRO BAY
MORRO BAY WATER
RECLAMATION FACILITY (WRF)

RO/UV BUILDING - UV SYSTEM
CIVIL-MECHANICAL
REACTOR SYSTEM PLAN

DESIGNED: Designer
DETAILED: Author
CHECKED: Checker
APPROVED: Approver
DATE:

0 1/2 1
IF THIS BAR DOES NOT MEASURE 1" THEN DRAWING IS NOT TO FULL SCALE

PROJECT NO.
400530

52-M-101
SHEET
OF XXX

PLOTTED: 30-07-2019 16:54:37
D400530

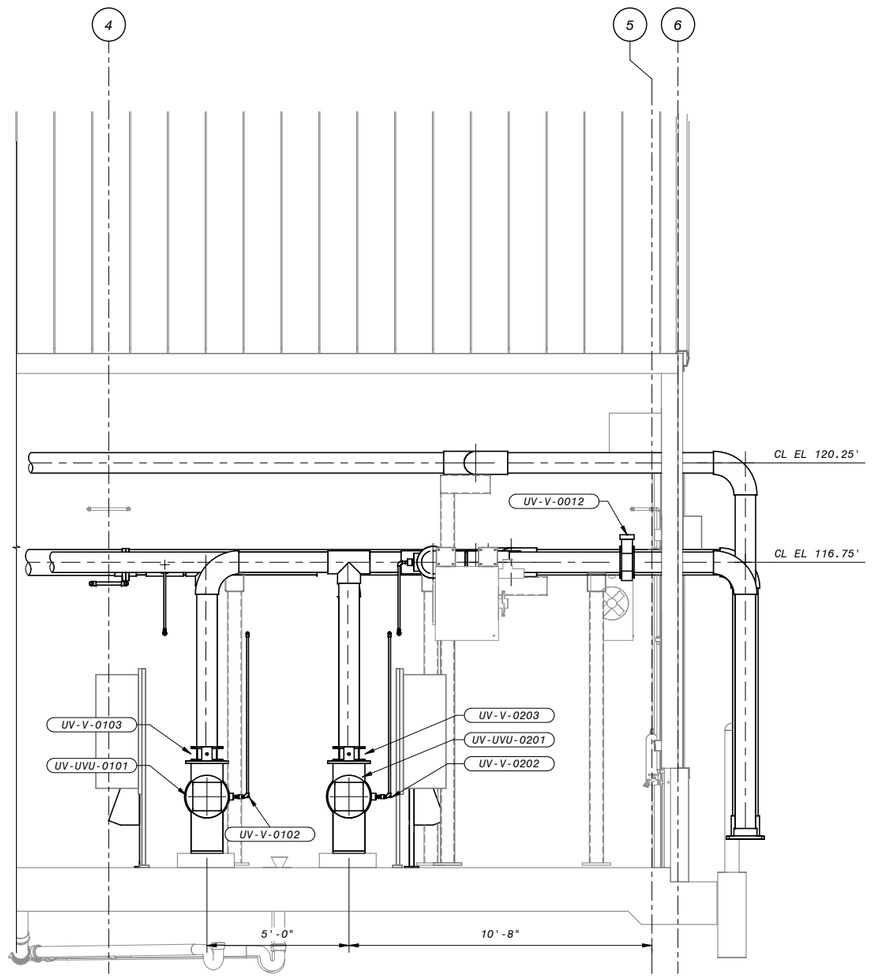


1 SECTION
52-M-101 3/8" = 1'-0"

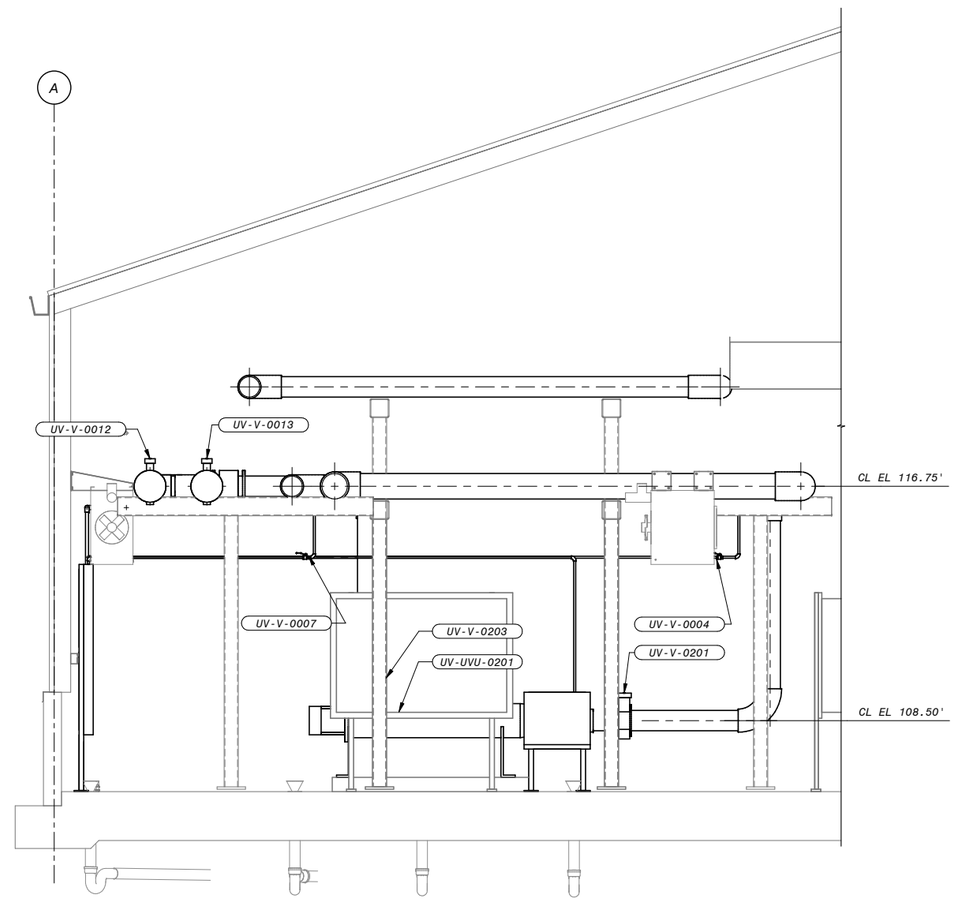


2 SECTION
52-M-101 3/8" = 1'-0"

12" 0' 1' 2' 3' 4' 5' 6' 7'
3/8" = 1'-0"

# COASTAL DEVELOPMENT PERMIT PLANS

| NO. | DATE | REVISIONS AND RECORD OF USE | BY | CHK | APP |
|---|---|---|---|---|---|
| B | 7/30/2019 | 60% SUBMITTAL | ADV | RT | EVB |
| A | 3/5/2019 | 30% SUBMITTAL | ADV | RWF | EVB |

BLACK & VEATCH
JOINT VENTURE
FILANC
BLACK & VEATCH

CITY OF MORRO BAY
MORRO BAY WATER
RECLAMATION FACILITY (WRF)

RO/UV BUILDING - UV SYSTEM
CIVIL-MECHANICAL
SECTIONS AND DETAILS 1

DESIGNED: Designer
DETAILED: Author
CHECKED: Checker
APPROVED: Approver
DATE:

0 1/2 1
IF THIS BAR DOES NOT MEASURE 1" THEN DRAWING IS NOT TO FULL SCALE

PROJECT NO.
400530

52-M-301
SHEET
OF XXX

PLOTTED: 30-07-2019 16:54:40
D400530

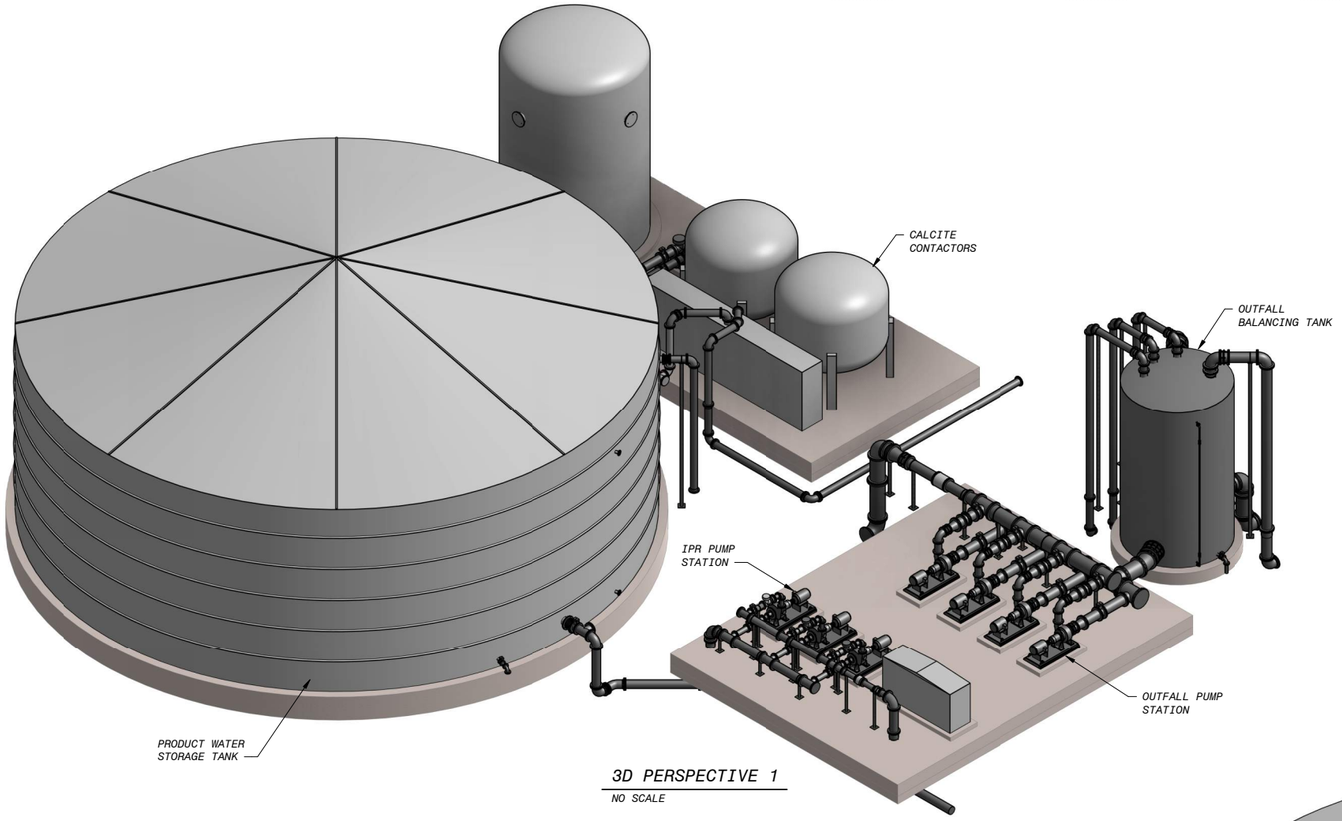


3D PERSPECTIVE 1

NO SCALE

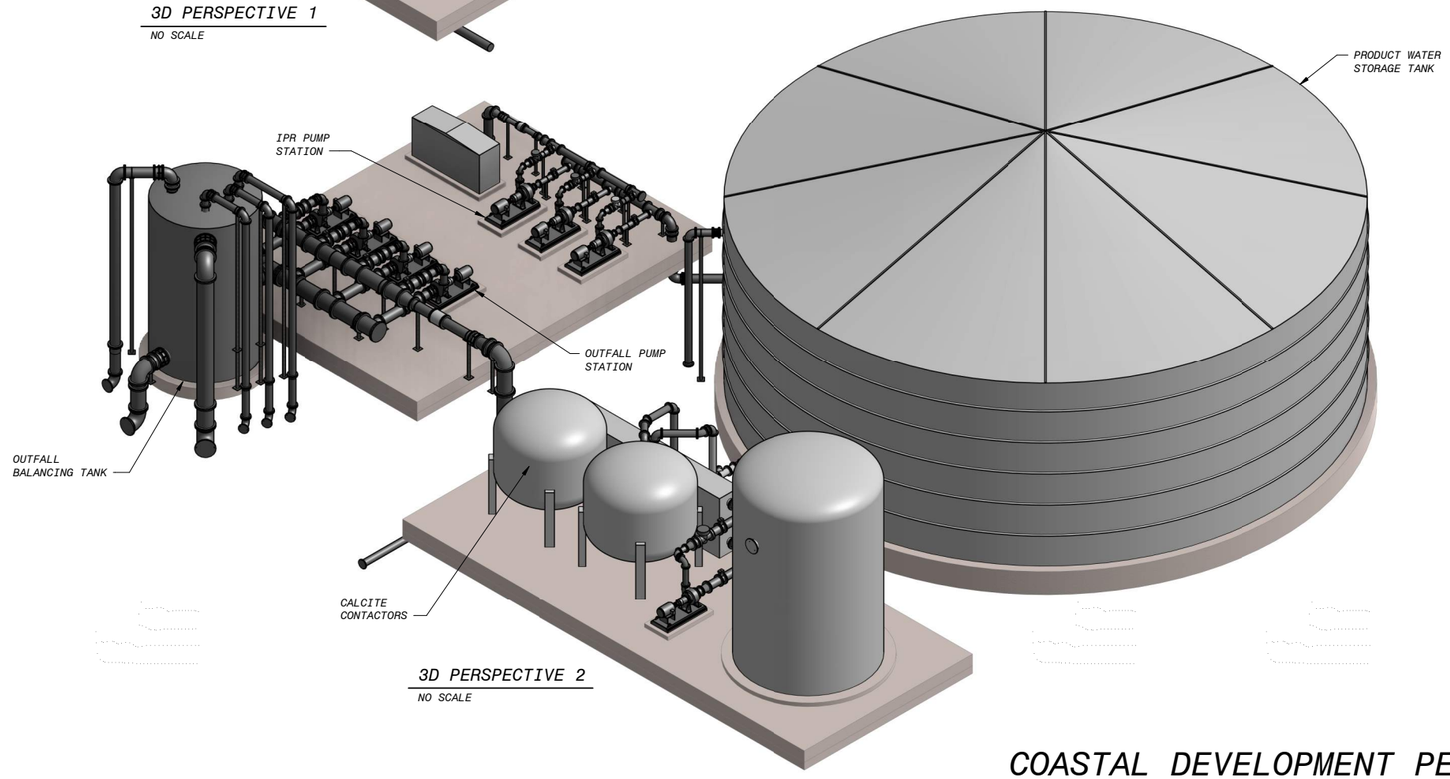


3D PERSPECTIVE 2

NO SCALE

# COASTAL DEVELOPMENT PERMIT PLANS

| NO. | BY | CHK | APP | DATE | REVISIONS AND RECORD OF USE |
|---|---|---|---|---|---|
| B | KEZ | RT | EVB | 7/30/2019 | 60% SUBMITTAL |
| A | KEZ | RWF | EVB | 3/5/2019 | 30% SUBMITTAL |

BLACK & VEATCH

JOINT VENTURE

FILANC

BLACK & VEATCH

CITY OF MORRO BAY
MORRO BAY WATER
RECLAMATION FACILITY (WRF)

PRODUCT WATER AREA - OVERALL
CIVIL-MECHANICAL
3D VIEWS

DESIGNED: KEZ, EVB
DETAILED: MAK
CHECKED:
APPROVED:
DATE:

0 1/2 1

IF THIS BAR DOES NOT MEASURE 1" THEN DRAWING IS NOT TO FULL SCALE

PROJECT NO.
400530

60-M-001

SHEET
OF

PLOTTED: 7/25/2019 10:37:19 AM

D400530

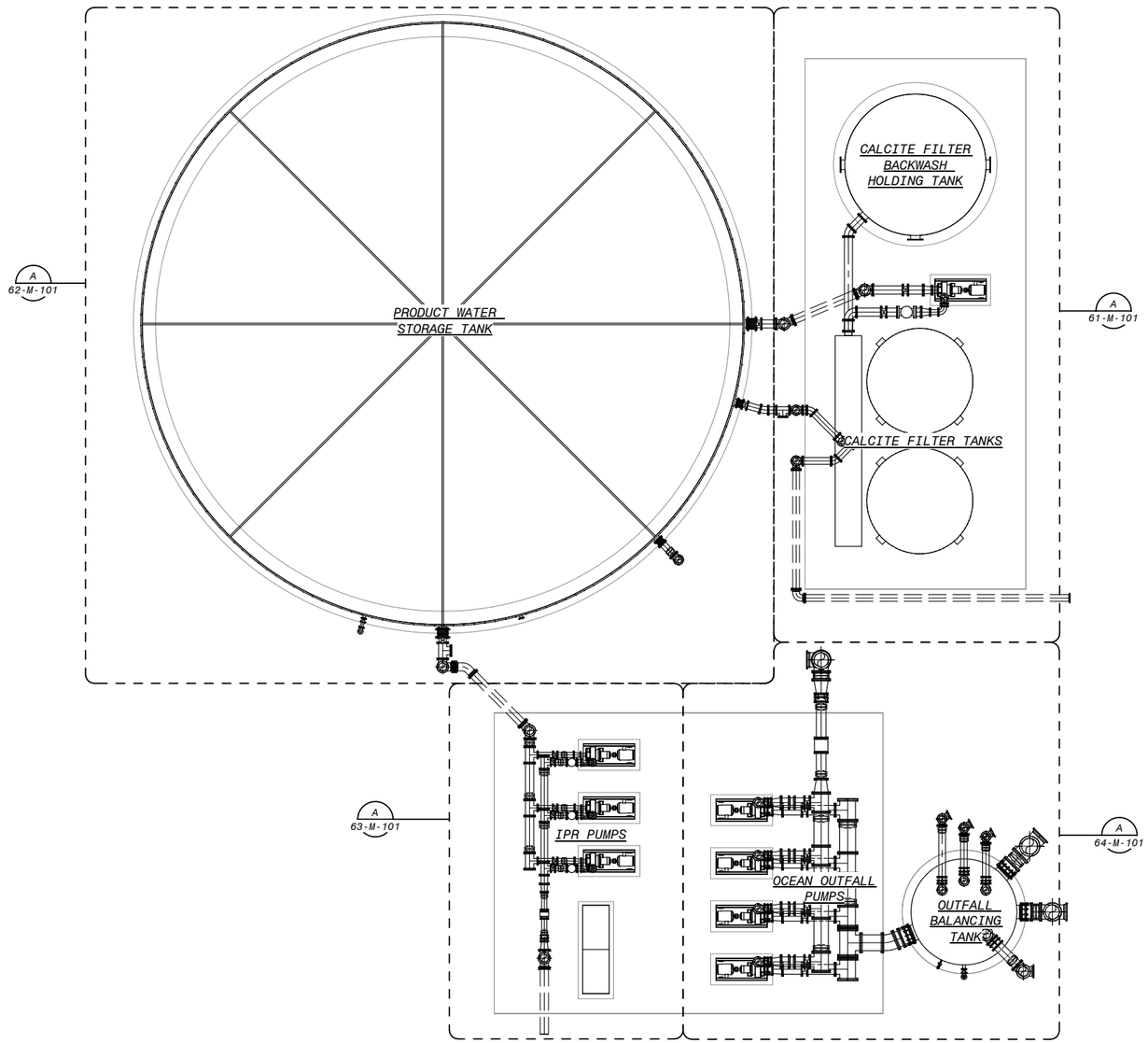


PRODUCT WATER AREA - OVERALL - OPERATING LEVEL PLAN

1/8" = 1'-0"

NOTES:

| NO. | BY | CHK | APP | DATE | REVISIONS AND RECORD OF USE |
|---|---|---|---|---|---|
| B | KEZ | RT | EVB | 7/30/2019 | 60% SUBMITTAL |
| A | KEZ | RWF | EVB | 3/5/2019 | 30% SUBMITTAL |

BLACK & VEATCH

JOINT VENTURE

FILANC

BLACK & VEATCH

CITY OF MORRO BAY
MORRO BAY WATER
RECLAMATION FACILITY (WRF)

PRODUCT WATER AREA - OVERALL
CIVIL-MECHANICAL
OPERATING LEVEL PLAN

DESIGNED: Designer
DETAILED: Author
CHECKED: Checker
APPROVED: Approver
DATE:

0 1/2 1
IF THIS BAR DOES NOT MEASURE 1" THEN DRAWING IS NOT TO FULL SCALE

PROJECT NO.
400530

60-M-101
SHEET
OF

8' 4' 0' 8' 16'
1/8" = 1'-0"

COASTAL DEVELOPMENT PERMIT PLANS

PLOTTED: 7/25/2019 10:37:22 AM
D400530

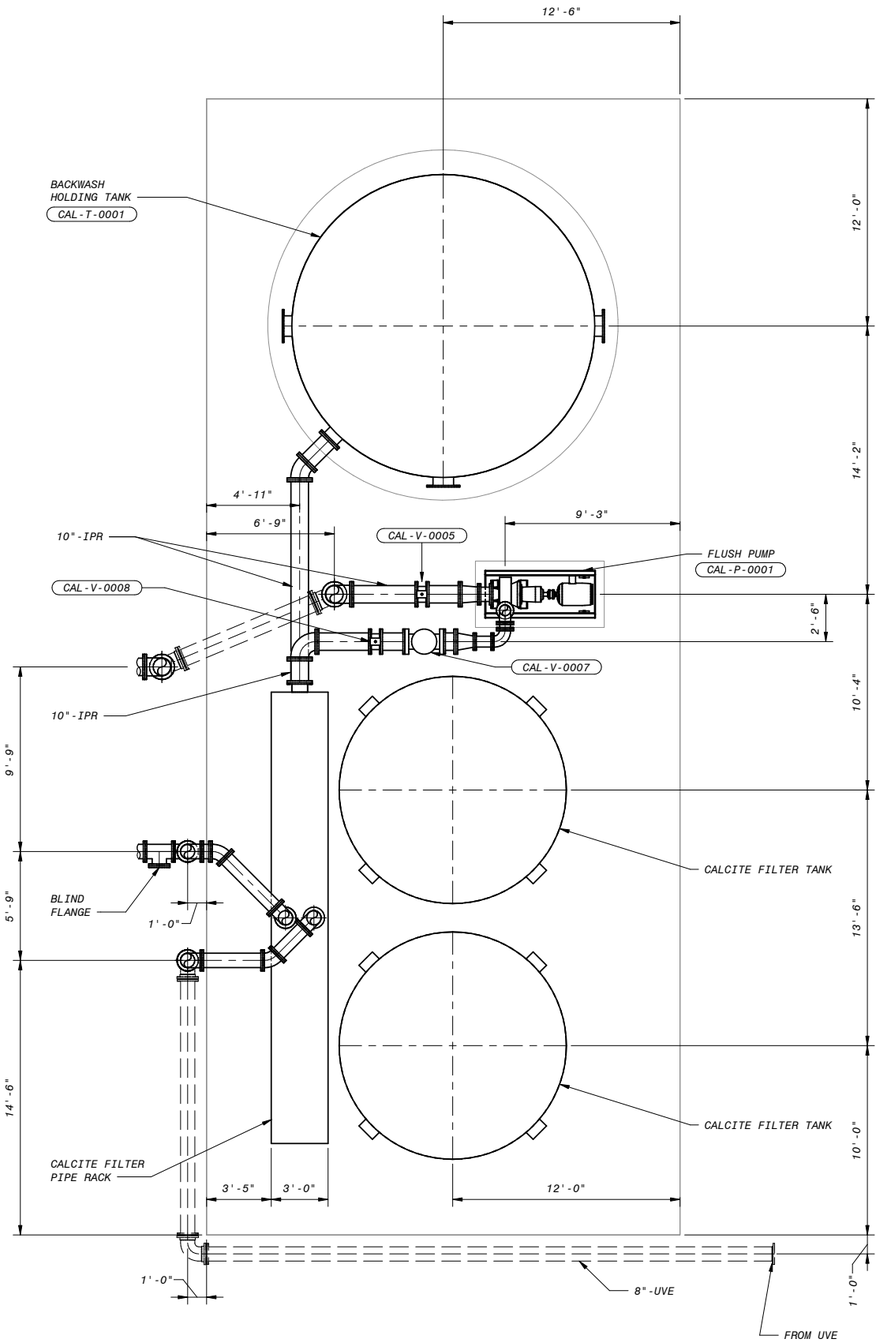


A PRODUCT WATER AREA - CALCITE CONTACTOR - PLAN

60-M-101 1/4" = 1'-0"

NOTES:

1. PIPING CONFIGURATION WITHIN THE CALCITE CONTACTOR SKID WILL BE PROVIDED BY THE CALCITE CONTACTOR MANUFACTURER.

| NO. | BY | CHK | APP |
|---|---|---|---|
| B | KEZ | RT | EVB |
| A | KEZ | RWF | EVB |

| DATE | REVISIONS AND RECORD OF USE |
|---|---|
| 7/30/2019 | 60% SUBMITTAL |
| 3/5/2019 | 30% SUBMITTAL |

BLACK & VEATCH

JOINT VENTURE

FILANC

BLACK & VEATCH

CITY OF MORRO BAY
MORRO BAY WATER
RECLAMATION FACILITY (WRF)

PRODUCT WATER AREA - CALCITE CONTACTOR
CIVIL-MECHANICAL
PLAN

DESIGNED: KEZ, EVB
DETAILED: MAK
CHECKED:
APPROVED:
DATE:

0 1/2 1
IF THIS BAR DOES NOT MEASURE 1" THEN DRAWING IS NOT TO FULL SCALE

PROJECT NO.
400530

61-M-101
SHEET
OF

4' 2' 0' 4' 8'
1/4" = 1'-0"

COASTAL DEVELOPMENT PERMIT PLANS

PLOTTED: 7/25/2019 10:37:23 AM
D400530

NOTES:

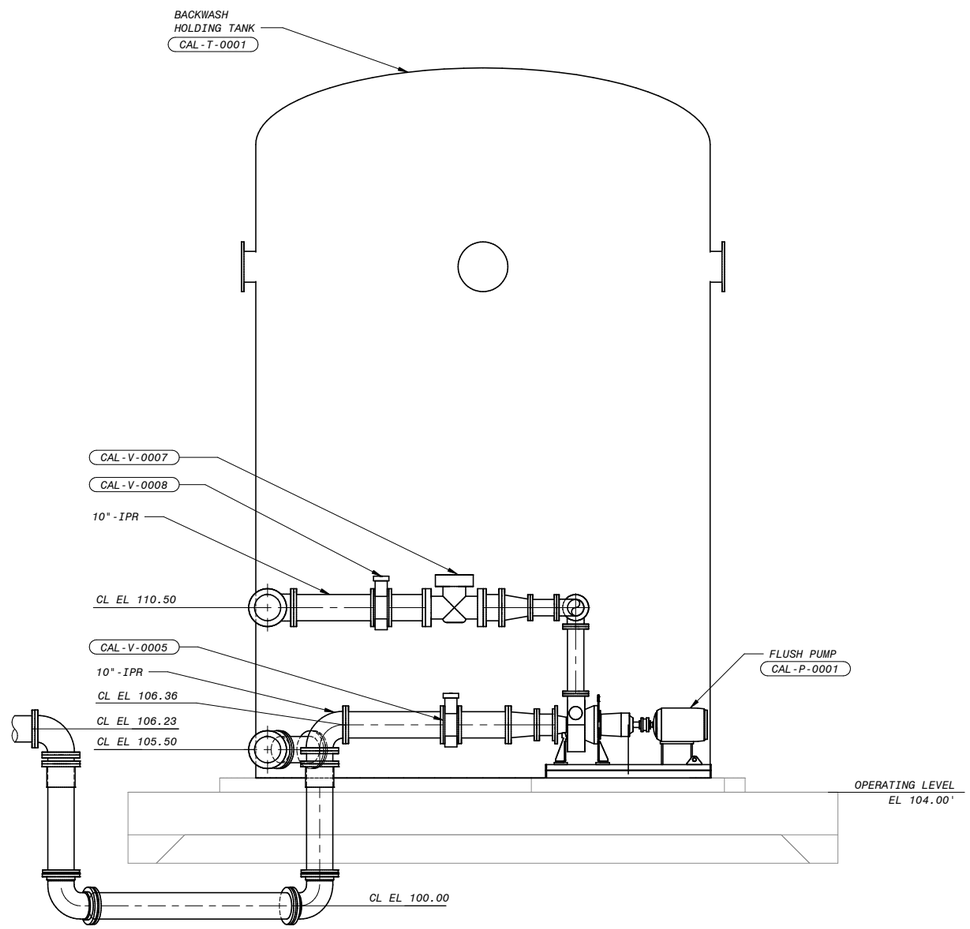


1 SECTION
61-M-101 3/8" = 1'-0"

12" 0' 1' 2' 3' 4' 5' 6' 7'
3/8" = 1'-0"

COASTAL DEVELOPMENT PERMIT PLANS

| DATE | REVISIONS AND RECORD OF USE | NO. | BY | CHK | APP |
|---|---|---|---|---|---|
| 3/5/2019 | 30% SUBMITTAL | A | KEZ | RWF | EVB |

BLACK & VEATCH
JOINT VENTURE
FILANC
BLACK & VEATCH

CITY OF MORRO BAY
MORRO BAY WATER
RECLAMATION FACILITY (WRF)

PRODUCT WATER AREA - CALCITE CONTACTOR
CIVIL-MECHANICAL
SECTIONS AND DETAILS

DESIGNED: KEZ, EVB
DETAILED: MAK
CHECKED:
APPROVED:
DATE:

0 1/2 1
IF THIS BAR DOES NOT MEASURE 1" THEN DRAWING IS NOT TO FULL SCALE

PROJECT NO.
400530

61-M-301
SHEET
OF

PLOTTED: 7/10/2019 4:08:25 PM
D400530

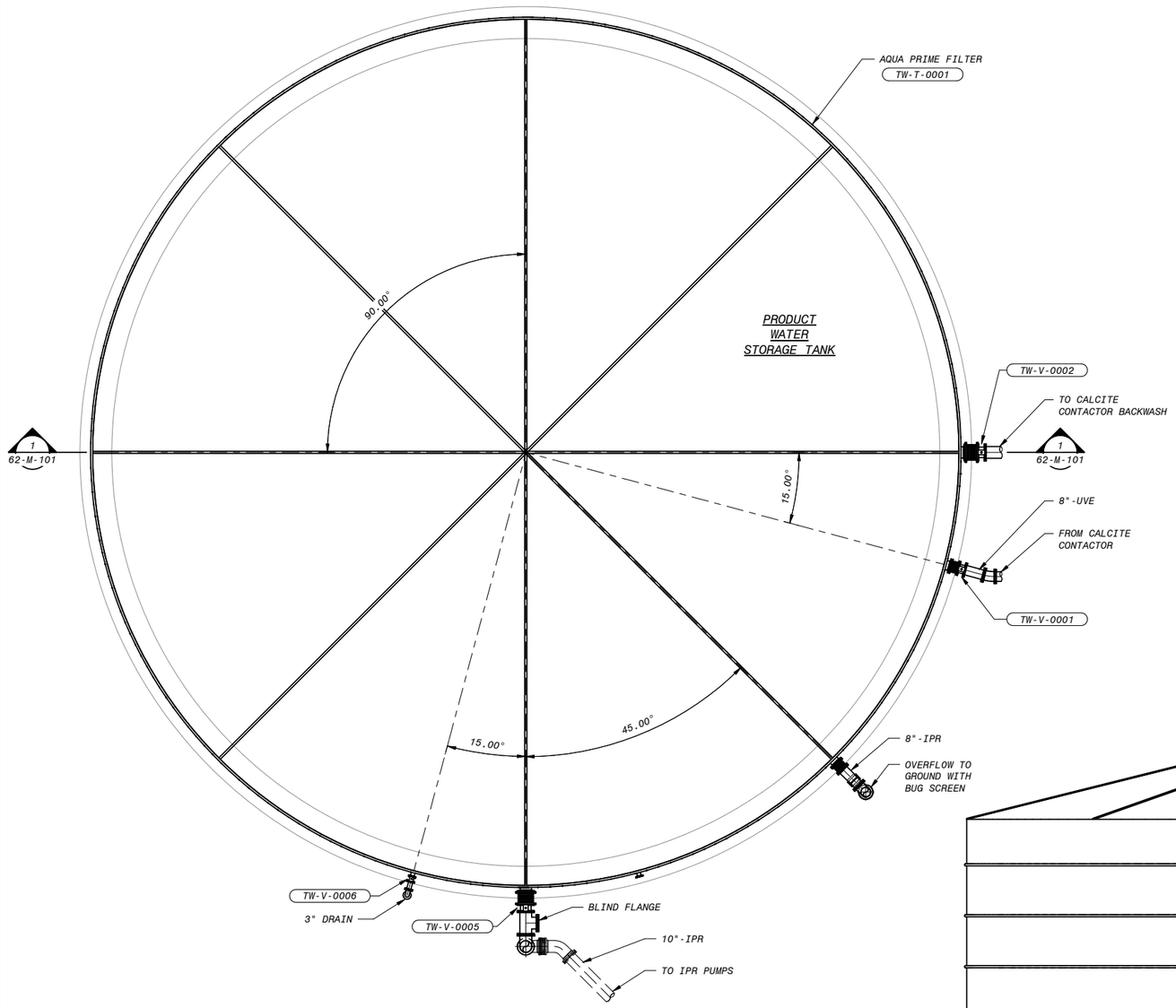


A PRODUCT WATER AREA - PRODUCT WATER STORAGE TANK - PLAN
60-M-101 3/16" = 1'-0"

NOTES:

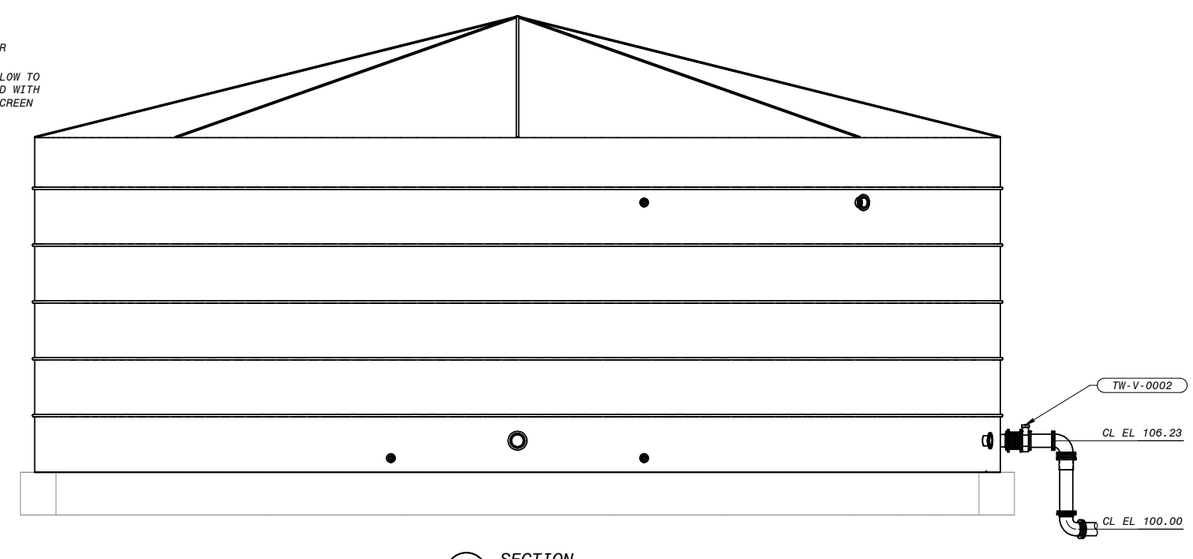


1 SECTION
62-M-101 3/16" = 1'-0"

6" 4' 2' 0' 5' 10'
3/16" = 1'-0"

# COASTAL DEVELOPMENT PERMIT PLANS

| NO. | BY | CHK | APP |
|---|---|---|---|
| B | KEZ | RT | EVB |
| A | KEZ | RWF | EVB |

| DATE | REVISIONS AND RECORD OF USE |
|---|---|
| 7/30/2019 | 60% SUBMITTAL |
| 3/5/2019 | 30% SUBMITTAL |

BLACK & VEATCH
JOINT VENTURE
FILANC
BLACK & VEATCH

CITY OF MORRO BAY
MORRO BAY WATER
RECLAMATION FACILITY (WRF)

PRODUCT WATER AREA
PRODUCT WATER STORAGE TANK
CIVIL-MECHANICAL
PLAN, SECTIONS AND DETAILS

DESIGNED: KEZ, EVB
DETAILED: RMB
CHECKED:
APPROVED:
DATE:

0 1/2 1
IF THIS BAR DOES NOT MEASURE 1" THEN DRAWING IS NOT TO FULL SCALE

PROJECT NO.
400530

62-M-101
SHEET
OF

PLOTTED: 7/25/2019 10:37:24 AM
D400530

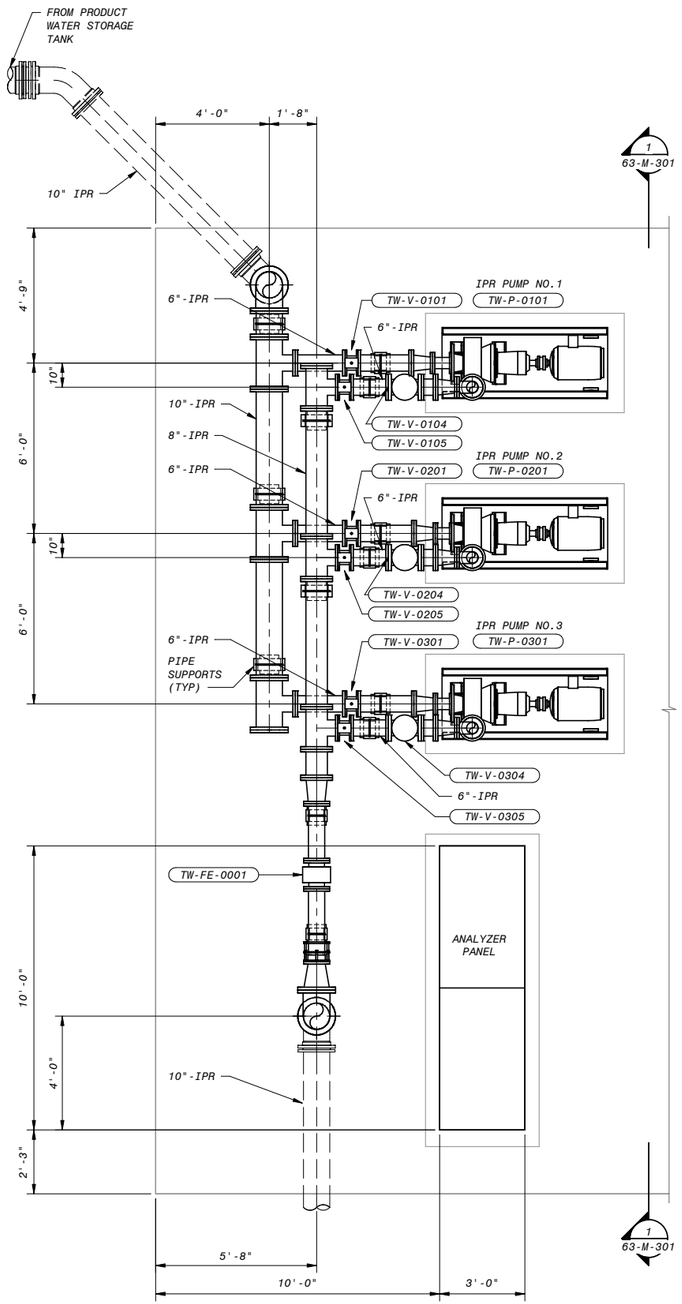


A PRODUCT WATER AREA - IPR PRODUCT WATER PUMP STATION - PLAN

60-M-101 3/8" = 1'-0"

NOTES:

12" 0' 1' 2' 3' 4' 5' 6' 7'

3/8" = 1'-0"

COASTAL DEVELOPMENT PERMIT PLANS

| NO. | BY | CHK | APP |
|---|---|---|---|
| B | KEZ | RT | EVB |
| A | KEZ | RWF | EVB |

| DATE | REVISIONS AND RECORD OF USE |
|---|---|
| 7/30/2019 | 60% SUBMITTAL |
| 3/5/2019 | 30% SUBMITTAL |

BLACK & VEATCH
JOINT VENTURE
FILANC
BLACK & VEATCH

CITY OF MORRO BAY
MORRO BAY WATER
RECLAMATION FACILITY (WRF)

PRODUCT WATER AREA
IPR PRODUCT WATER PUMP STATION
CIVIL-MECHANICAL
PLAN

DESIGNED: KEZ, EVB
DETAILED: RMB
CHECKED:
APPROVED:
DATE:

0 1/2 1
IF THIS BAR DOES NOT MEASURE 1" THEN DRAWING IS NOT TO FULL SCALE

PROJECT NO.
400530

63-M-101
SHEET
OF

PLOTTED: 7/25/2019 10:37:25 AM
D400530

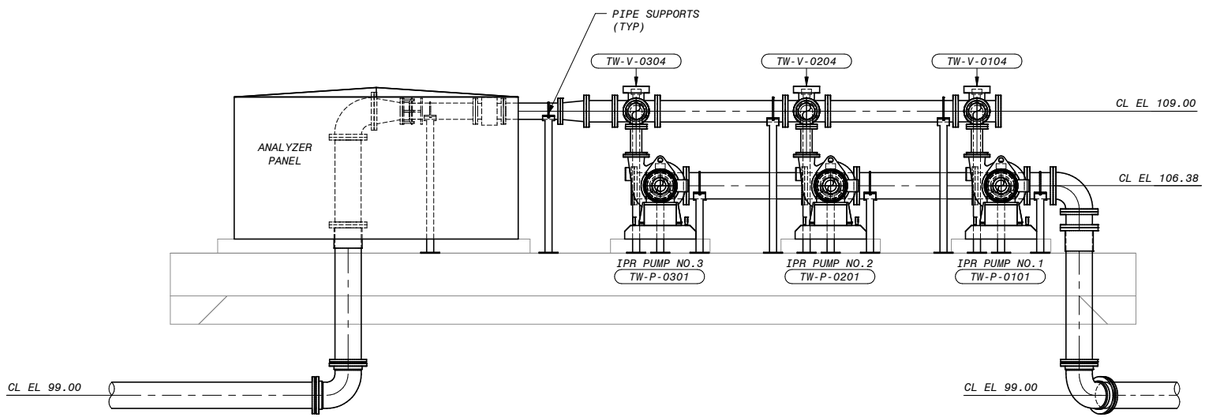


1 SECTION
63-M-101 3/8" = 1'-0"

12" 0' 1' 2' 3' 4' 5' 6' 7'
3/8" = 1'-0"

COASTAL DEVELOPMENT PERMIT PLANS

| NO. | BY | CHK | APP |
|---|---|---|---|
| B | KEZ | RT | EVB |
| A | KEZ | RWF | EVB |

| DATE | REVISIONS AND RECORD OF USE |
|---|---|
| 7/30/2019 | 60% SUBMITTAL |
| 3/5/2019 | 30% SUBMITTAL |

BLACK & VEATCH
JOINT VENTURE
FILANC
BLACK & VEATCH

CITY OF MORRO BAY
MORRO BAY WATER
RECLAMATION FACILITY (WRF)

PRODUCT WATER AREA
IPR PRODUCT WATER PUMP STATION
CIVIL-MECHANICAL
SECTIONS AND DETAILS 1

DESIGNED: KEZ, EVB
DETAILED: RMB
CHECKED:
APPROVED:
DATE:

0 1/2 1
IF THIS BAR DOES NOT MEASURE 1" THEN DRAWING IS NOT TO FULL SCALE

PROJECT NO.
400530

63-M-301
SHEET
OF

PLOTTED: 7/25/2019 10:37:26 AM
D400530

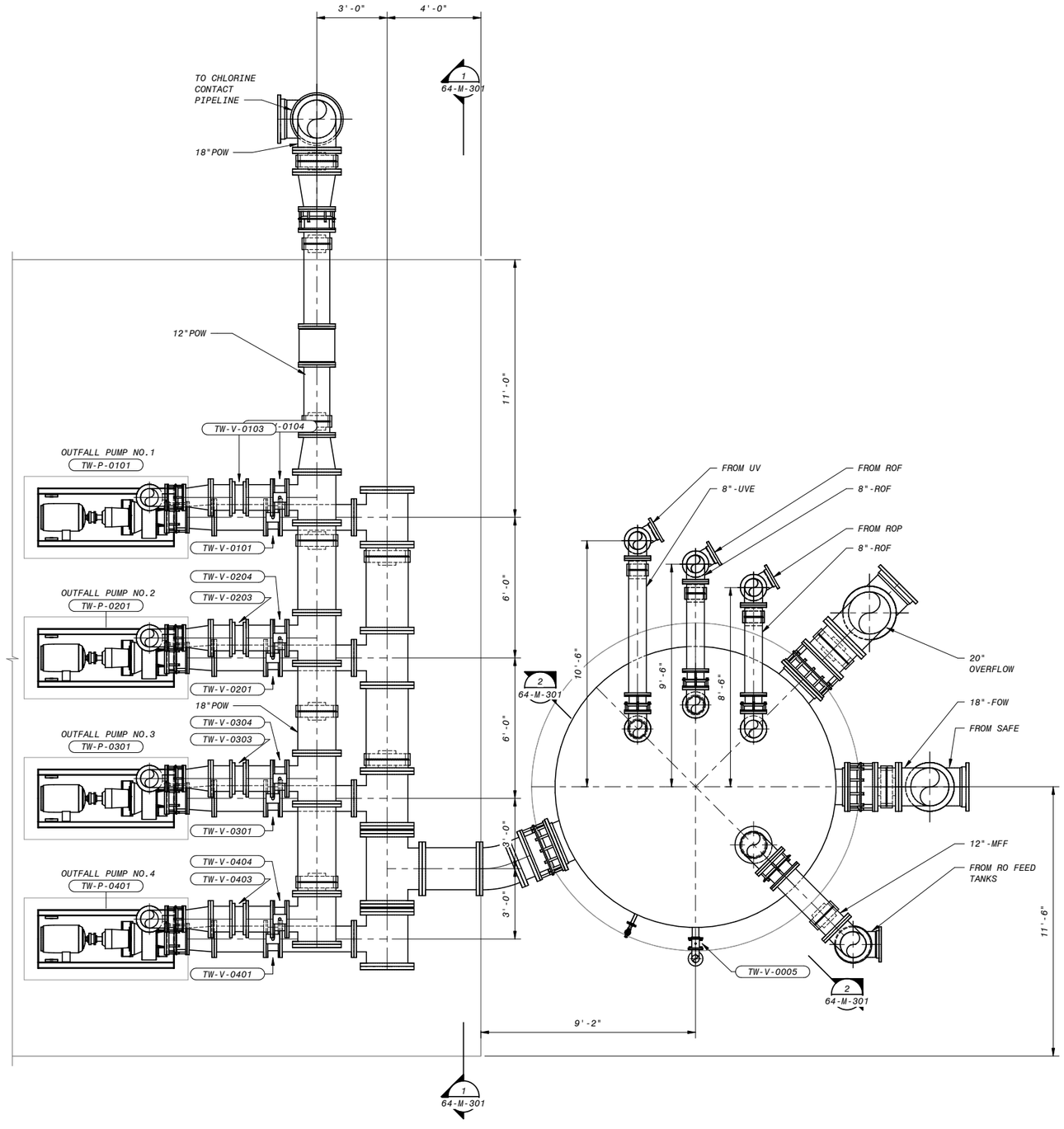


PRODUCT WATER AREA - OUTFALL PUMP STATION - PLAN

3/8" = 1'-0"

NOTES:

| NO. | BY | CHK | APP | DATE | REVISIONS AND RECORD OF USE |
|---|---|---|---|---|---|
| B | KEZ | RT | EVB | 7/30/2019 | 60% SUBMITTAL |
| A | KEZ | RWF | EVB | 3/5/2019 | 30% SUBMITTAL |

BLACK & VEATCH

JOINT VENTURE

FILANC

BLACK & VEATCH

CITY OF MORRO BAY
MORRO BAY WATER
RECLAMATION FACILITY (WRF)

PRODUCT WATER AREA - OUTFALL PUMP STATION
CIVIL-MECHANICAL
PLAN

DESIGNED: KEZ, EVB
DETAILED: RMB
CHECKED:
APPROVED:
DATE:

0 1/2 1
IF THIS BAR DOES NOT MEASURE 1" THEN DRAWING IS NOT TO FULL SCALE

PROJECT NO.
400530

64-M-101
SHEET
OF

12" 0' 1' 2' 3' 4' 5' 6' 7'
3/8" = 1'-0"

COASTAL DEVELOPMENT PERMIT PLANS

PLOTTED: 7/25/2019 10:37:29 AM
D400530

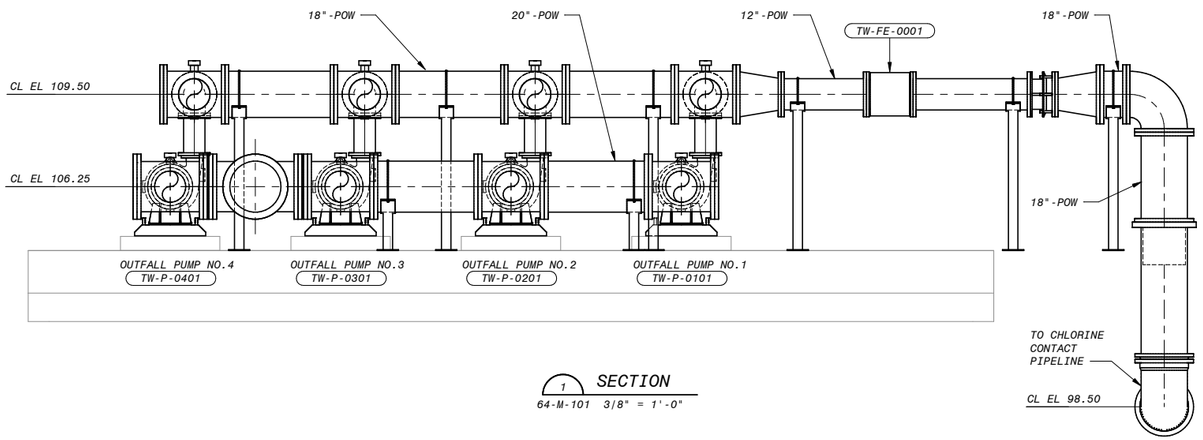


1 SECTION
64-M-101 3/8" = 1'-0"

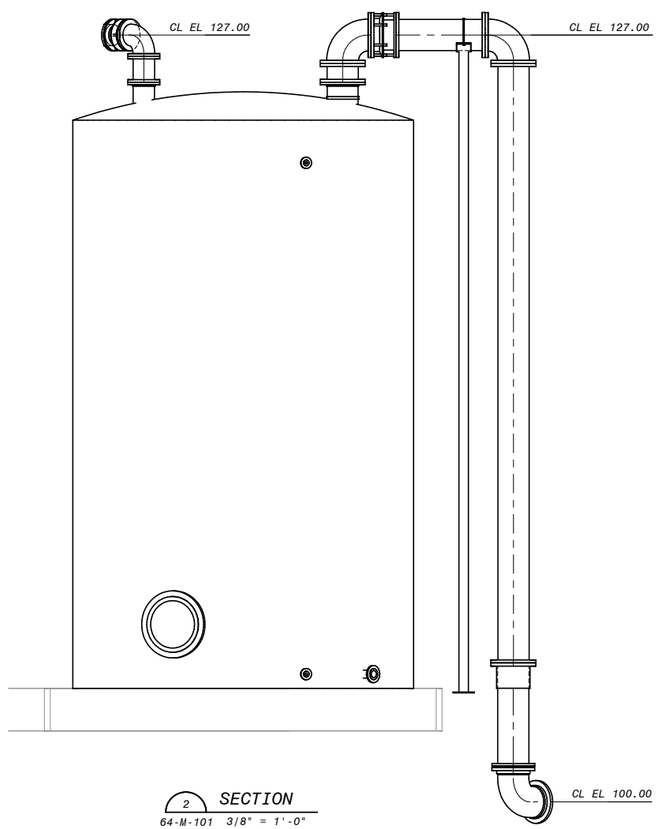


2 SECTION
64-M-101 3/8" = 1'-0"

12" 0' 1' 2' 3' 4' 5' 6' 7'
3/8" = 1'-0"

COASTAL DEVELOPMENT PERMIT PLANS

| NO. | BY | CHK | APP | DATE | REVISIONS AND RECORD OF USE |
|---|---|---|---|---|---|
| B | KEZ | RT | EVB | 7/30/2019 | 60% SUBMITTAL |
| A | KEZ | RWF | EVB | 3/5/2019 | 30% SUBMITTAL |

BLACK & VEATCH
JOINT VENTURE
FILANC
BLACK & VEATCH

CITY OF MORRO BAY
MORRO BAY WATER
RECLAMATION FACILITY (WRF)

PRODUCT WATER AREA - OUTFALL PUMP STATION
CIVIL-MECHANICAL
SECTIONS AND DETAILS 1

DESIGNED: KEZ, EVB
DETAILED: RMB
CHECKED:
APPROVED:
DATE:

0 1/2 1
IF THIS BAR DOES NOT MEASURE 1" THEN DRAWING IS NOT TO FULL SCALE

PROJECT NO.
400530

64-M-301
SHEET
OF

PLOTTED: 7/25/2019 10:37:30 AM
D400530

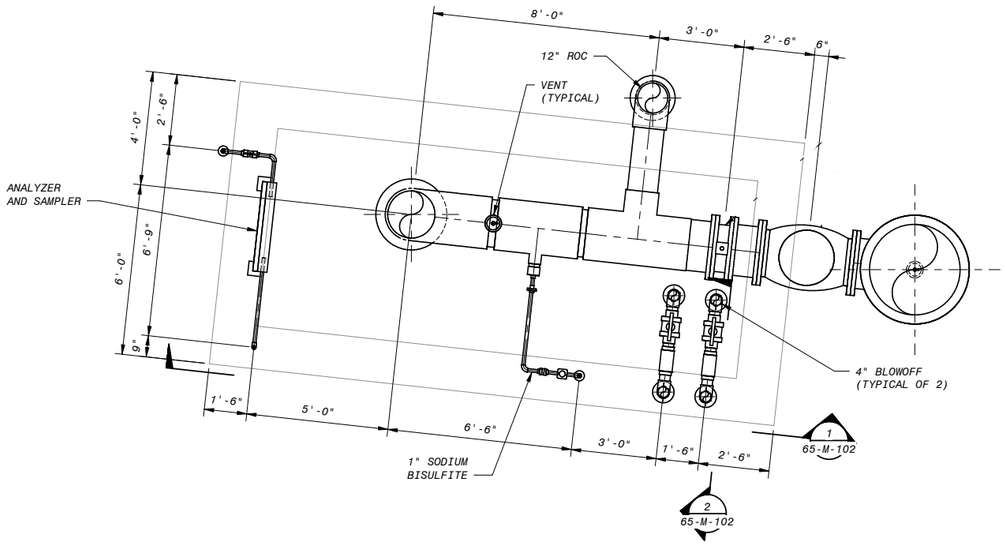


PRODUCT WATER AREA - DECHLORINATION FACILITY - PLAN

3/8" = 1'-0"

NOTES:

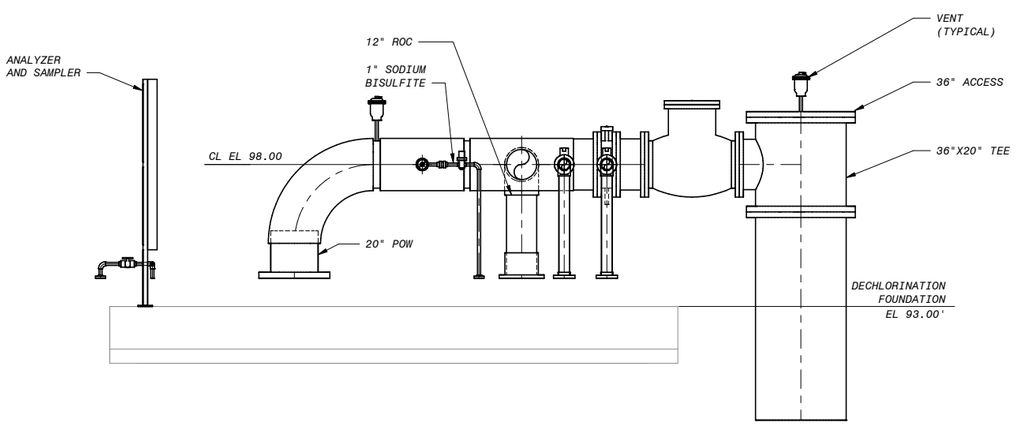


1 SECTION

65-M-102 3/8" = 1'-0"

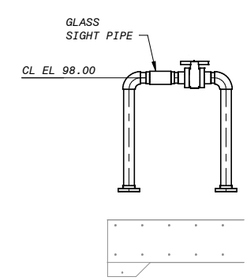


2 BLOW OFF STATION SECTION

65-M-102 3/8" = 1'-0"

12" 0' 1' 2' 3' 4' 5' 6' 7'

3/8" = 1'-0"

COASTAL DEVELOPMENT PERMIT PLANS

| DATE | REVISIONS AND RECORD OF USE | NO. | BY | CHK | APP |
|---|---|---|---|---|---|

BLACK & VEATCH

JOINT VENTURE

FILANC

BLACK & VEATCH

CITY OF MORRO BAY
MORRO BAY WATER
RECLAMATION FACILITY (WRF)

PRODUCT WATER AREA
DECHLORINATION FACILITY
CIVIL-MECHANICAL
PLAN, SECTIONS AND DETAILS

DESIGNED: KEZ, EVB
DETAILED: RMB
CHECKED: Checker
APPROVED: Approver
DATE:

0 1/2 1

IF THIS BAR DOES NOT MEASURE 1" THEN DRAWING IS NOT TO FULL SCALE

PROJECT NO.
400530

65-M-102

SHEET
OF

PLOTTED: 7/29/2019 2:47:13 PM

D400530

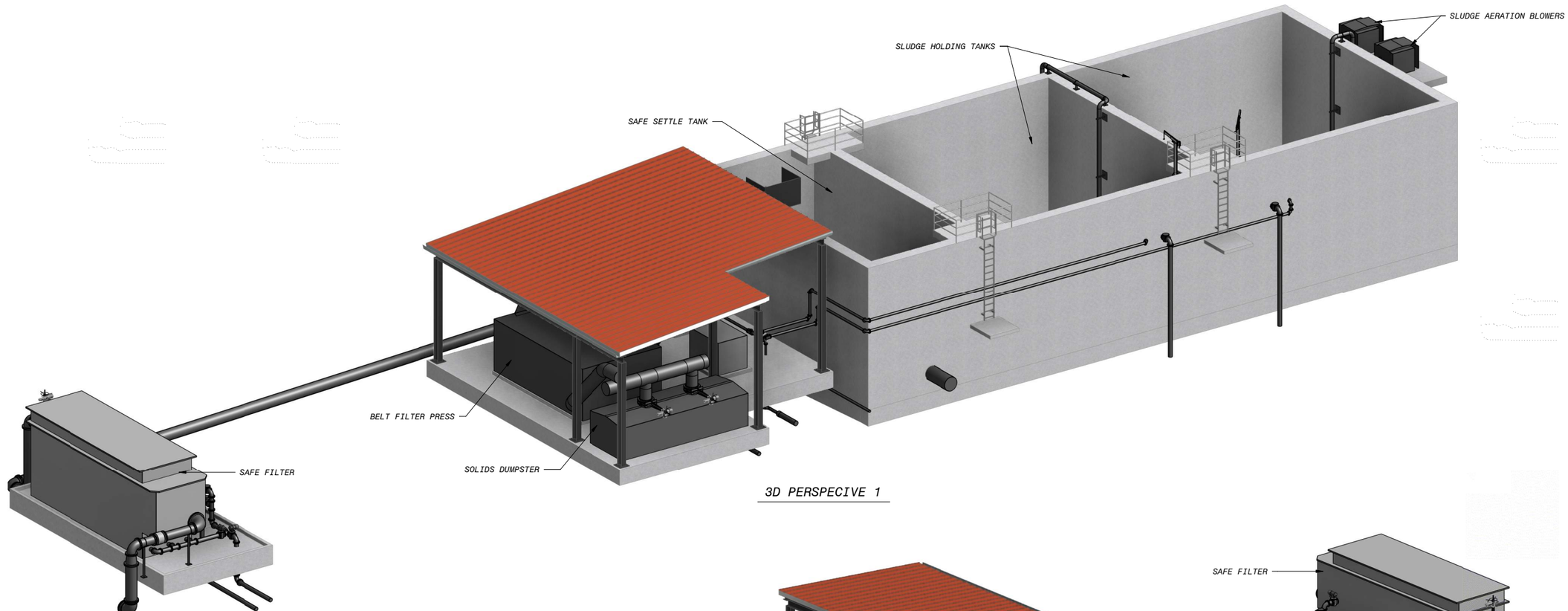


3D PERSPECIVE 1

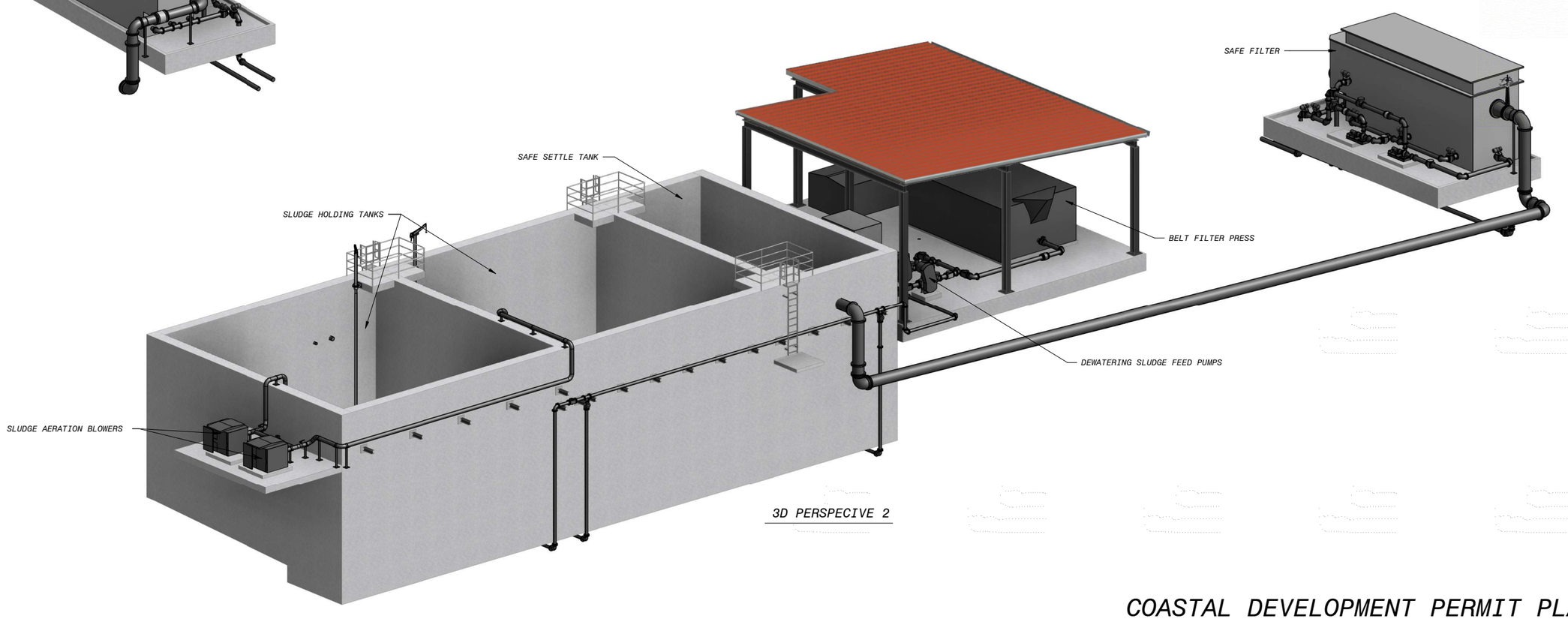


3D PERSPECIVE 2

| NO. | BY | CHK | APP |
|---|---|---|---|
| B | KEZ | RT | EVB |
| A | KEZ | RWF | EVB |

| DATE | REVISIONS AND RECORD OF USE |
|---|---|
| 7/30/2019 | 60% SUBMITTAL |
| 3/5/2019 | 30% SUBMITTAL |

BLACK & VEATCH

JOINT VENTURE

FILANC

BLACK & VEATCH

CITY OF MORRO BAY
MORRO BAY WATER
RECLAMATION FACILITY (WRF)

RESIDUALS AREA - OVERALL
CIVIL - MECHANICAL
3D VIEWS

DESIGNED: KEZ
DETAILED: MAK
CHECKED:
APPROVED:
DATE:

0 1/2 1
IF THIS BAR DOES NOT MEASURE 1" THEN DRAWING IS NOT TO FULL SCALE

PROJECT NO.
400530

70-M-001
SHEET
OF

COASTAL DEVELOPMENT PERMIT PLANS

PLOTTED: 26-07-2019 14:28:02
D400530

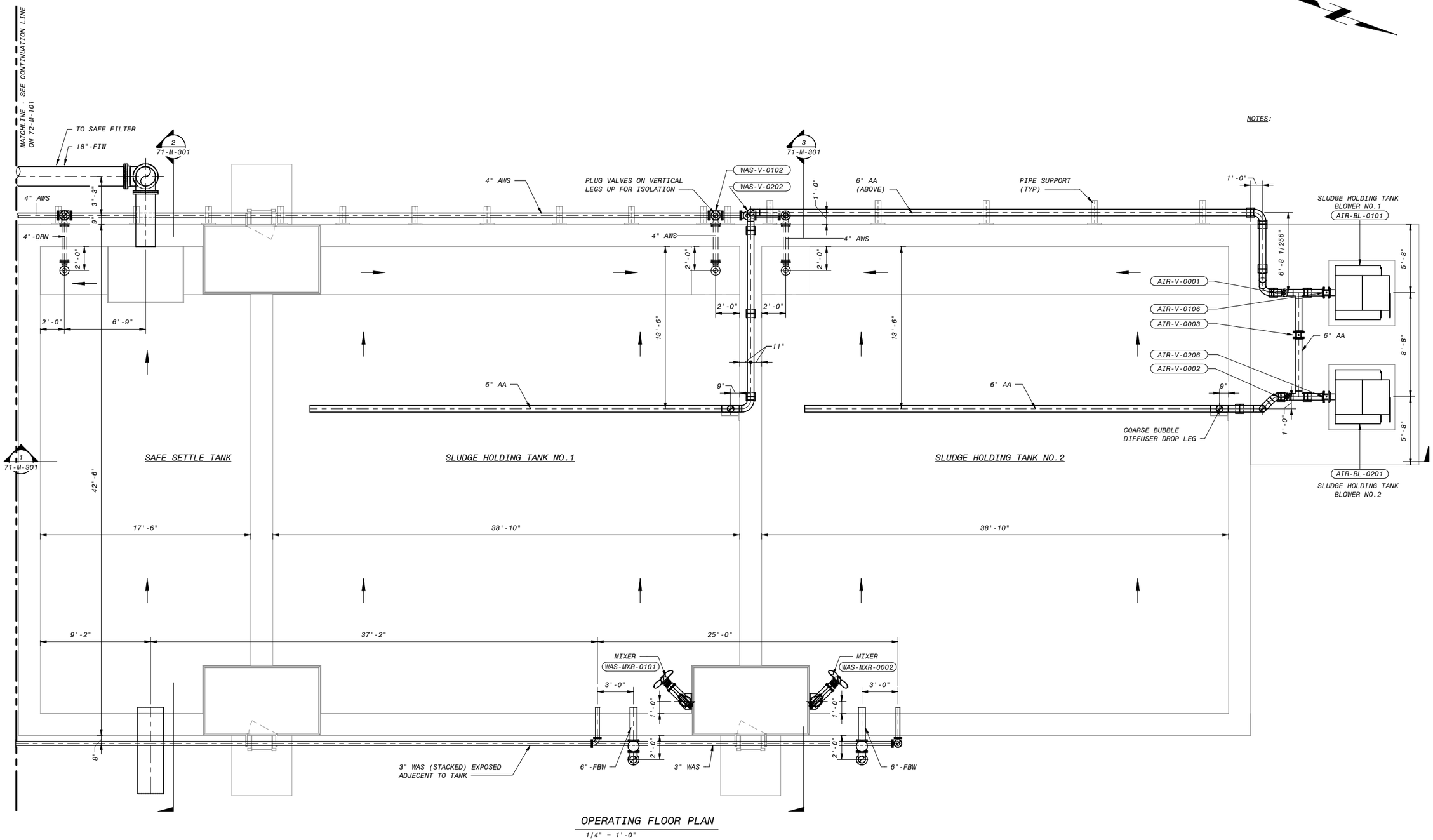


OPERATING FLOOR PLAN

1/4" = 1'-0"

NOTES:

| NO. | BY | CHK | APP | DATE | REVISIONS AND RECORD OF USE |
|---|---|---|---|---|---|
| B | KEZ | RT | EVB | 7/30/2019 | 60% SUBMITTAL |
| A | KEZ | RWF | EVB | 3/5/2019 | 30% SUBMITTAL |

BLACK & VEATCH

JOINT VENTURE

FILANC

BLACK & VEATCH

CITY OF MORRO BAY
MORRO BAY WATER
RECLAMATION FACILITY (WRF)

RESIDUALS AREA - SLUDGE HOLDING TANKS AND
SAFE SETTLE TANKS
CIVIL - MECHANICAL
OPERATING LEVEL PLAN

DESIGNED: KEZ
DETAILED: MAK
CHECKED:
APPROVED:
DATE:

0 1/2 1

IF THIS BAR DOES NOT MEASURE 1" THEN DRAWING IS NOT TO FULL SCALE

PROJECT NO.
400530

71-M-101
SHEET
OF

COASTAL DEVELOPMENT PERMIT PLANS

PLOTTED: 26-07-2019 14:28:04
D400530

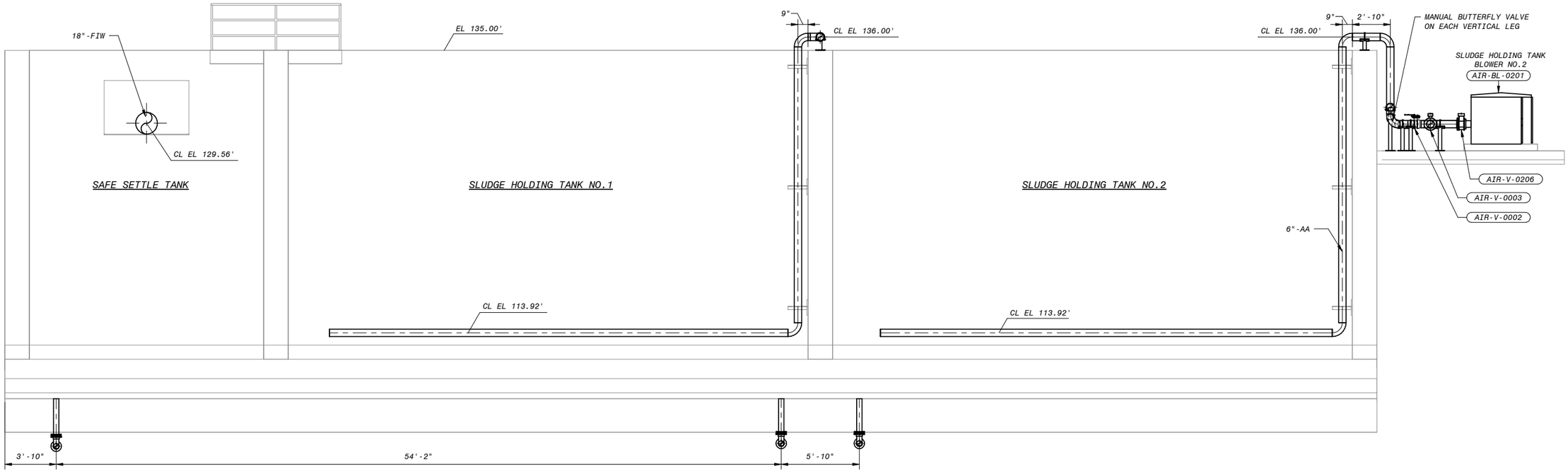


1 SECTION
71-M-101 1/4" = 1'-0"

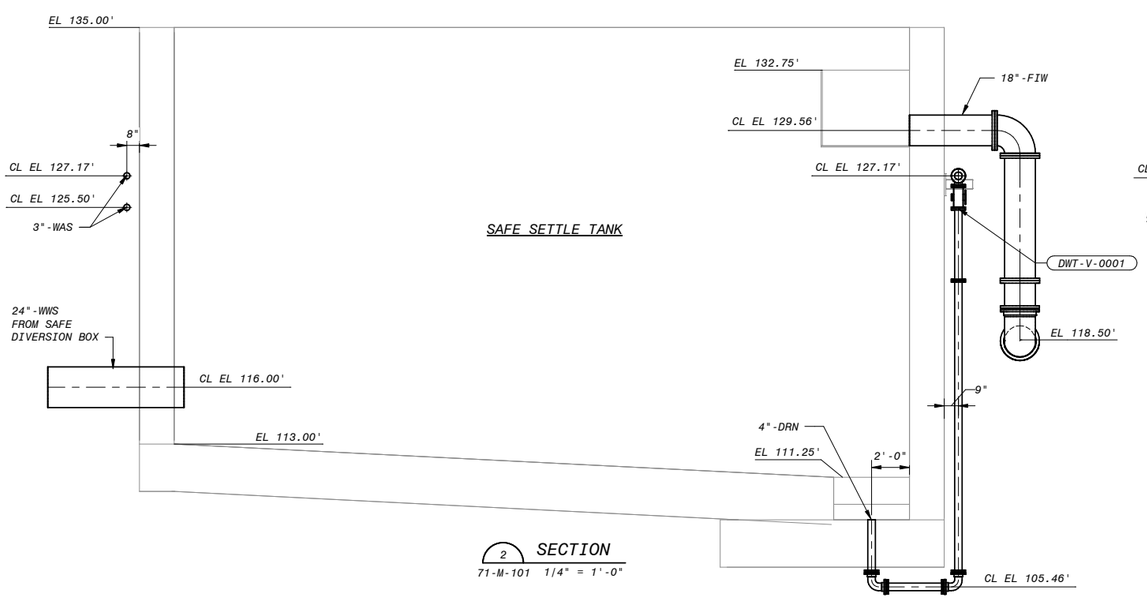


2 SECTION
71-M-101 1/4" = 1'-0"

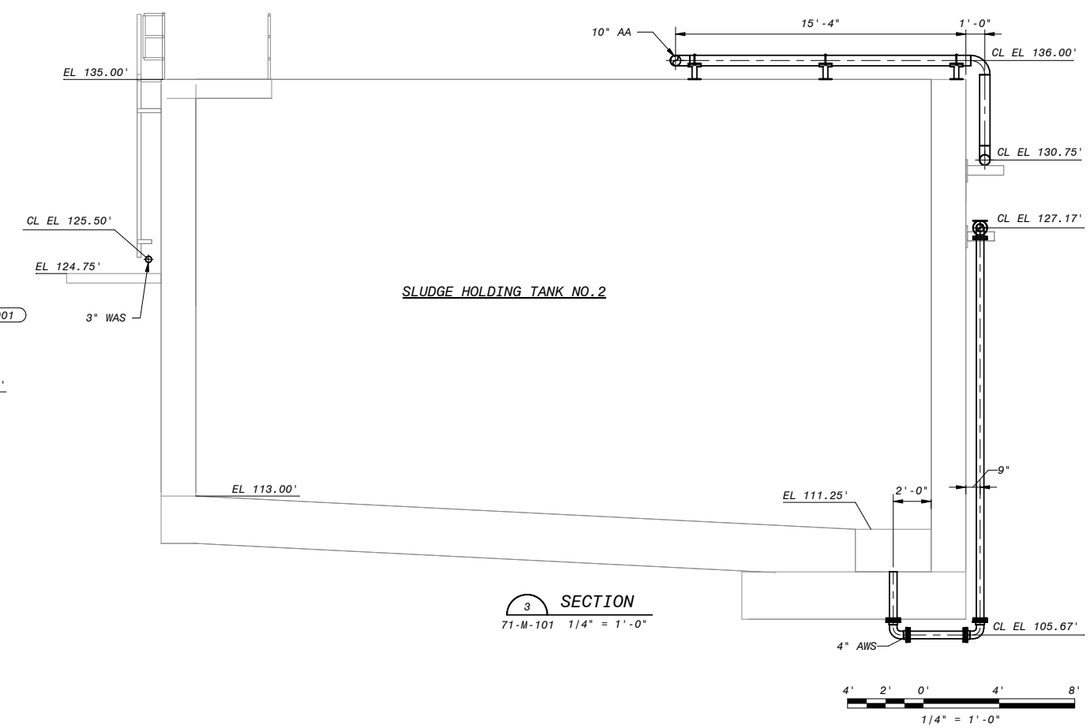


3 SECTION
71-M-101 1/4" = 1'-0"

# COASTAL DEVELOPMENT PERMIT PLANS

| NO. | BY | CHK | APP |
|---|---|---|---|
| B | KEZ | RT | EVB |
| A | KEZ | RWF | EVB |

REVISIONS AND RECORD OF USE

| DATE | |
|---|---|
| 7/30/2019 | 60% SUBMITTAL |
| 3/5/2019 | 30% SUBMITTAL |

BLACK & VEATCH

JOINT VENTURE

FILANC

BLACK & VEATCH

CITY OF MORRO BAY
MORRO BAY WATER
RECLAMATION FACILITY (WRF)

RESIDUALS AREA - SLUDGE HOLDING TANKS AND
SAFE SETTLE TANKS
CIVIL – MECHANICAL
SECTIONS & DETAILS 1

DESIGNED: KEZ
DETAILED: MAK
CHECKED:
APPROVED:
DATE:

0 1/2 1
IF THIS BAR DOES NOT MEASURE 1" THEN DRAWING IS NOT TO FULL SCALE

PROJECT NO.
400530

71-M-301
SHEET
OF

PLOTTED: 26-07-2019 14:28:07
D400530

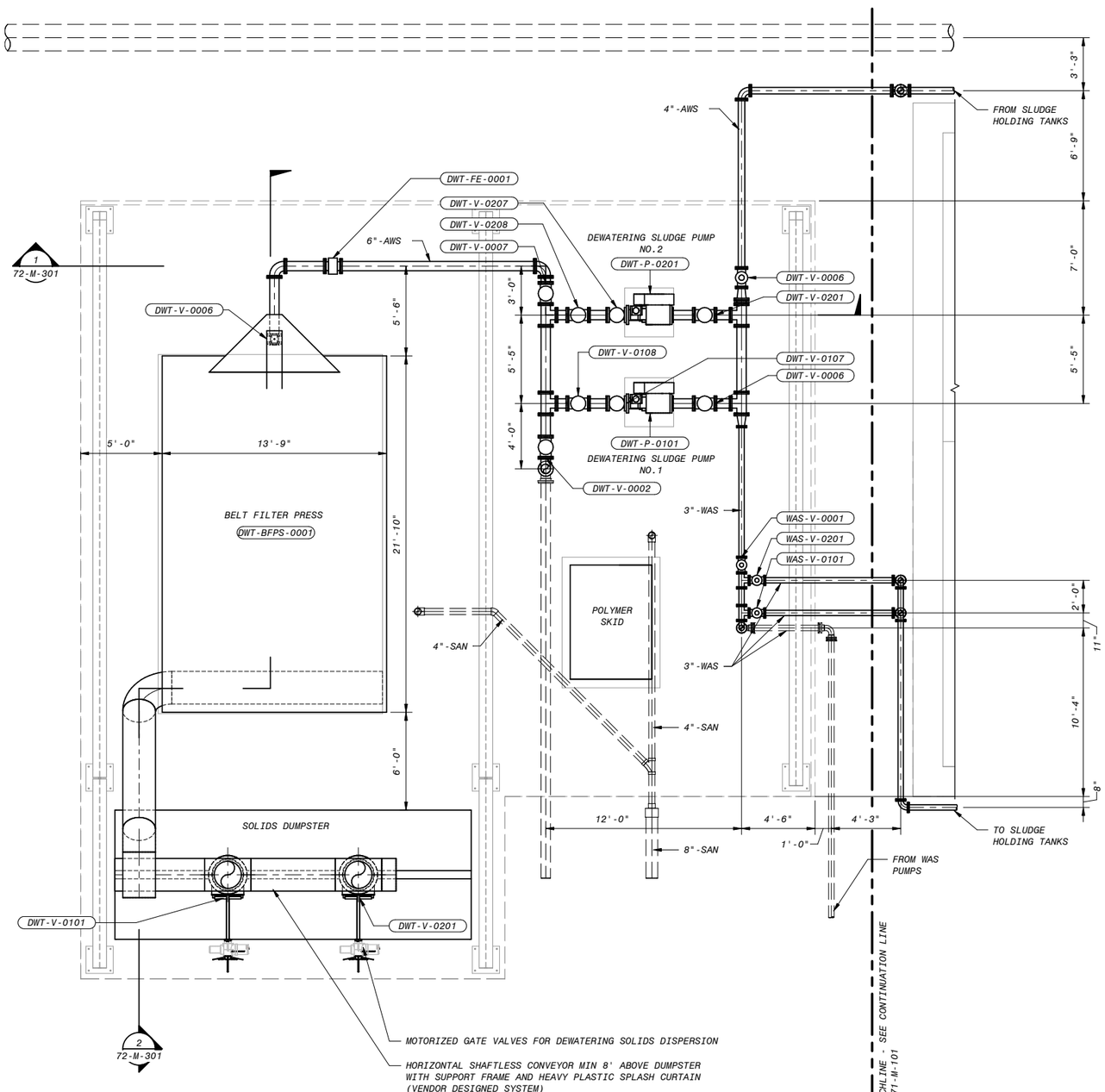


OPERATING FLOOR PLAN

1/4" = 1'-0"

NOTES:

4' 2' 0' 4' 8'

1/4" = 1'-0"

# COASTAL DEVELOPMENT PERMIT PLANS

| NO. | BY | CHK | APP | DATE | REVISIONS AND RECORD OF USE |
|---|---|---|---|---|---|
| B | KEZ | RT | EVB | 7/30/2019 | 60% SUBMITTAL |
| A | KEZ | RWF | EVB | 3/5/2019 | 30% SUBMITTAL |

BLACK & VEATCH

JOINT VENTURE

FILANC

BLACK & VEATCH

CITY OF MORRO BAY
MORRO BAY WATER
RECLAMATION FACILITY (WRF)

RESIDUALS AREA - DEWATERING FACILITY
CIVIL - MECHANICAL
PLAN

DESIGNED: KEZ
DETAILED: MAK
CHECKED:
APPROVED:
DATE:

0 1/2 1

IF THIS BAR DOES NOT MEASURE 1" THEN DRAWING IS NOT TO FULL SCALE

PROJECT NO.
400530

72-M-101

SHEET
OF

PLOTTED: 26-07-2019 14:28:09

D400530

NOTES:

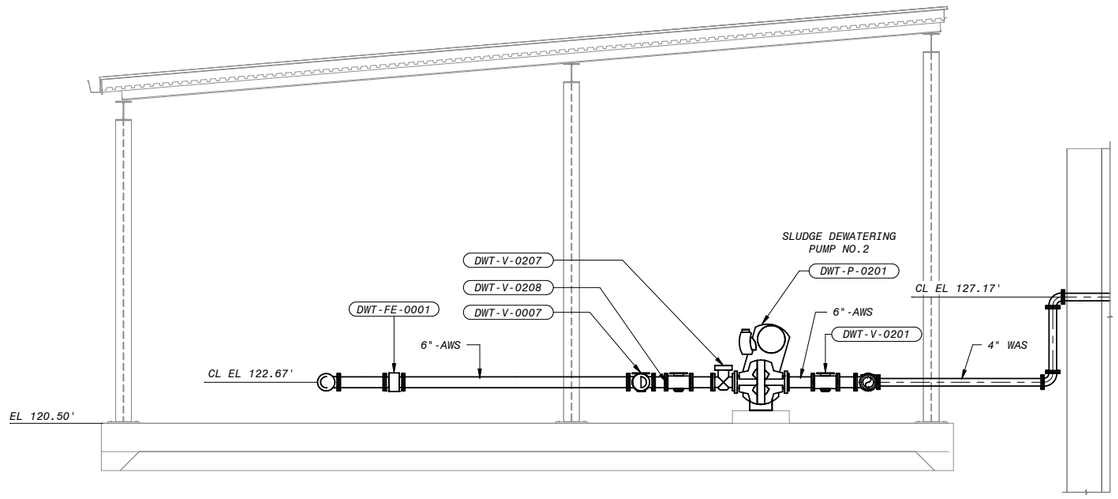


1 SECTION
72-M-101 1/4" = 1'-0"

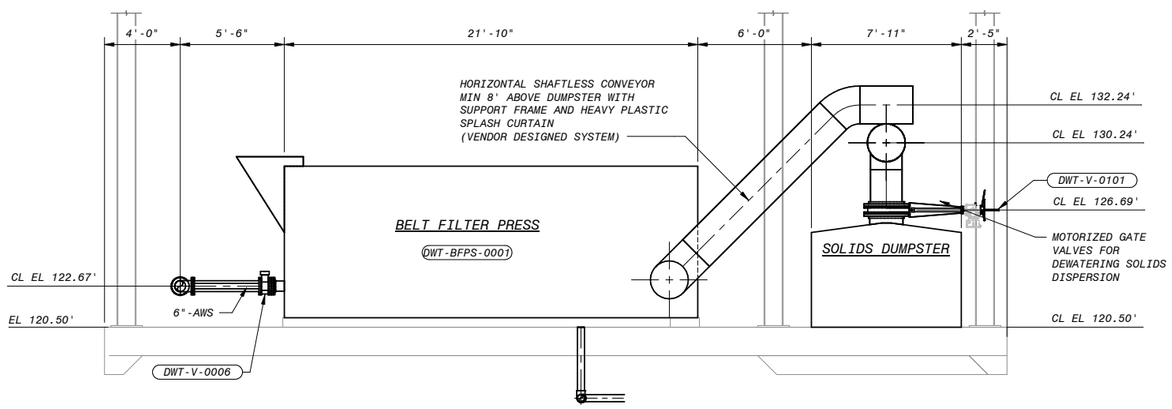


2 SECTION
72-M-101 1/4" = 1'-0"

4' 2' 0' 4' 8'
1/4" = 1'-0"

COASTAL DEVELOPMENT PERMIT PLANS

| NO. | BY | CHK | APP |
|---|---|---|---|
| B | KEZ | RT | EVB |
| A | KEZ | RWF | EVB |

| DATE | REVISIONS AND RECORD OF USE |
|---|---|
| 7/30/2019 | 60% SUBMITTAL |
| 3/5/2019 | 30% SUBMITTAL |

BLACK & VEATCH
JOINT VENTURE
FILANC
BLACK & VEATCH

CITY OF MORRO BAY
MORRO BAY WATER
RECLAMATION FACILITY (WRF)

RESIDUALS AREA - DEWATERING FACILITY
CIVIL - MECHANICAL
SECTIONS & DETAILS 1

DESIGNED: KEZ
DETAILED: MAK
CHECKED:
APPROVED:
DATE:

0 1/2 1
IF THIS BAR DOES NOT MEASURE 1" THEN DRAWING IS NOT TO FULL SCALE

PROJECT NO.
400530

72-M-301
SHEET
OF

PLOTTED: 26-07-2019 14:28:11
D400530

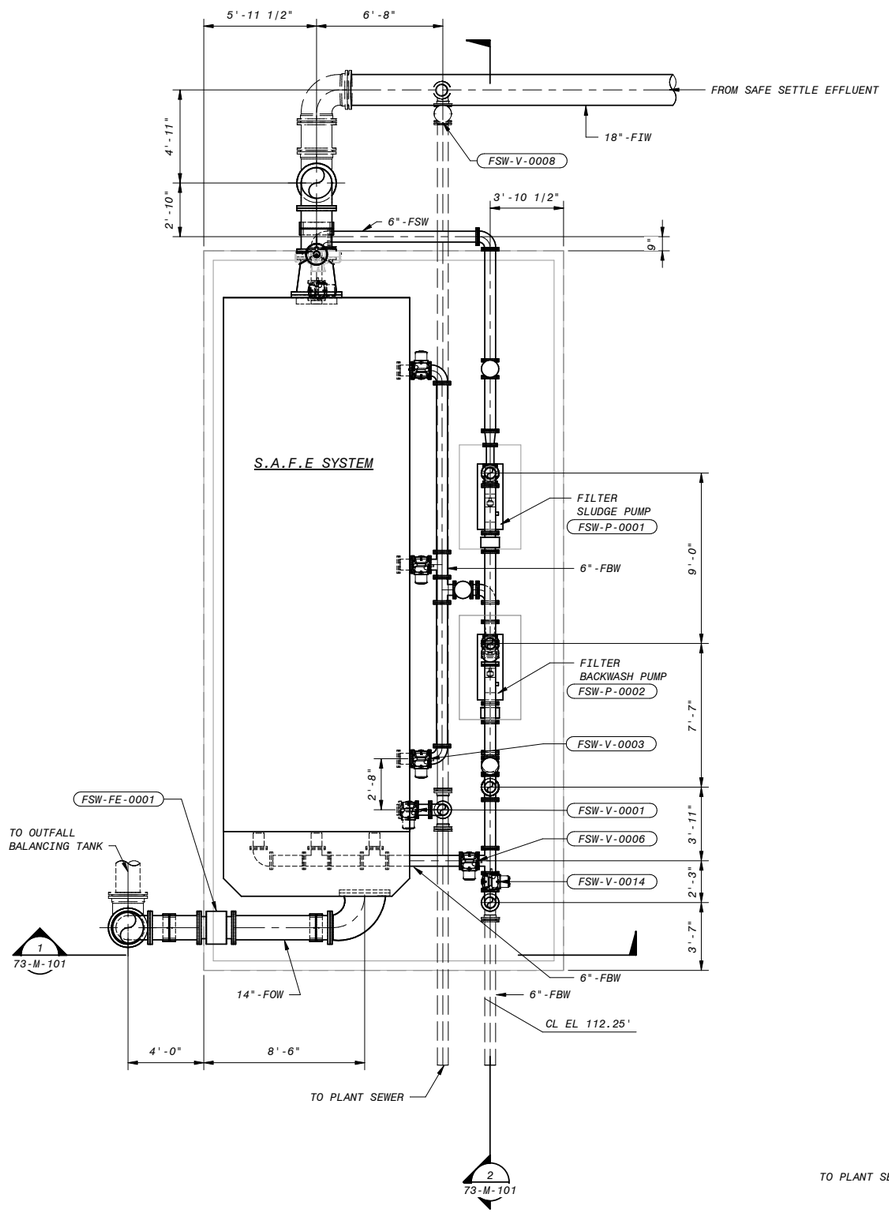


OPERATING FLOOR PLAN

1/4" = 1'-0"

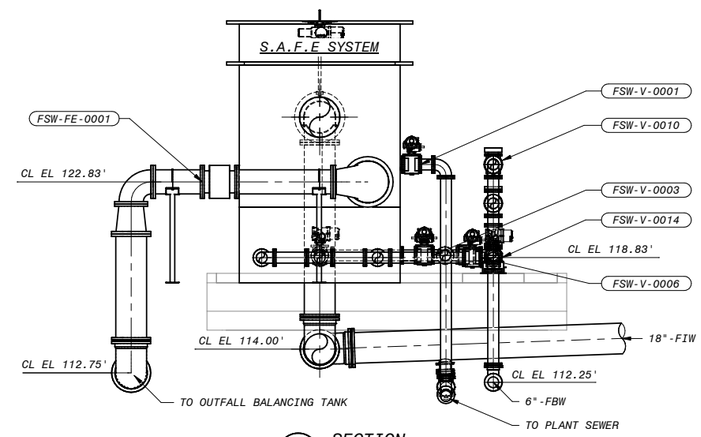


1 SECTION

73-M-101 1/4" = 1'-0"

NOTES:

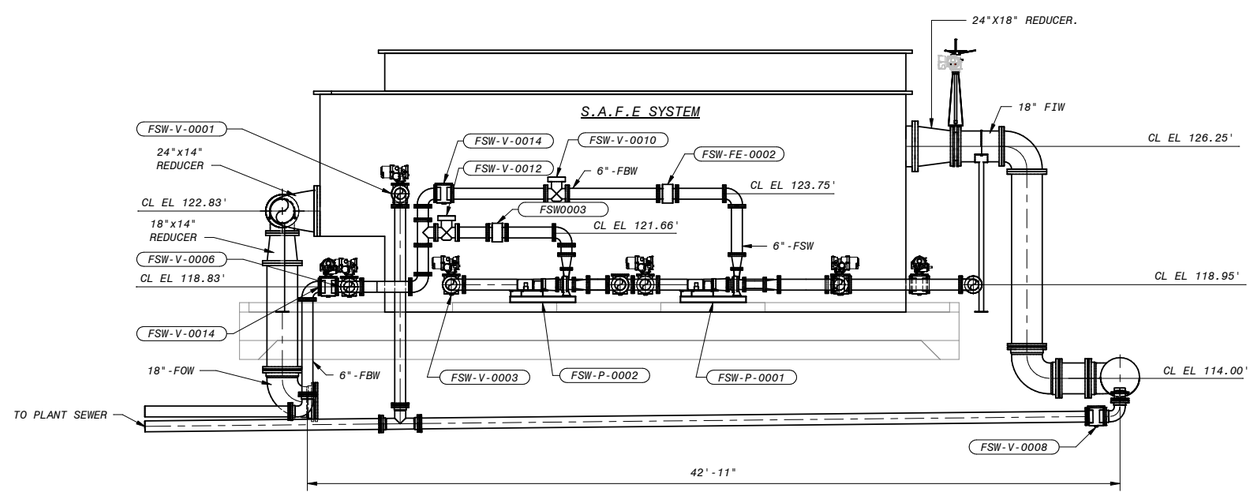


2 SECTION

73-M-101 1/4" = 1'-0"

4' 2' 0' 4' 8'

1/4" = 1'-0"

# COASTAL DEVELOPMENT PERMIT PLANS

| NO. | BY | CHK | APP | REVISIONS AND RECORD OF USE | DATE |
|---|---|---|---|---|---|
| B | KEZ | RT | EVB | 60% SUBMITTAL | 7/30/2019 |
| A | KEZ | RWF | EVB | 30% SUBMITTAL | 3/5/2019 |

BLACK & VEATCH

JOINT VENTURE

FILANC

BLACK & VEATCH

CITY OF MORRO BAY
MORRO BAY WATER
RECLAMATION FACILITY (WRF)

RESIDUALS AREA - SAFE FILTER SYSTEM
CIVIL - MECHANICAL
PLAN, SECTIONS AND DETAILS

DESIGNED: KEZ
DETAILED: MAK
CHECKED:
APPROVED:
DATE:

0 1/2 1

IF THIS BAR DOES NOT MEASURE 1" THEN DRAWING IS NOT TO FULL SCALE

PROJECT NO.
400530

73-M-101
SHEET
OF

PLOTTED: 26-07-2019 14:28:16
D400530

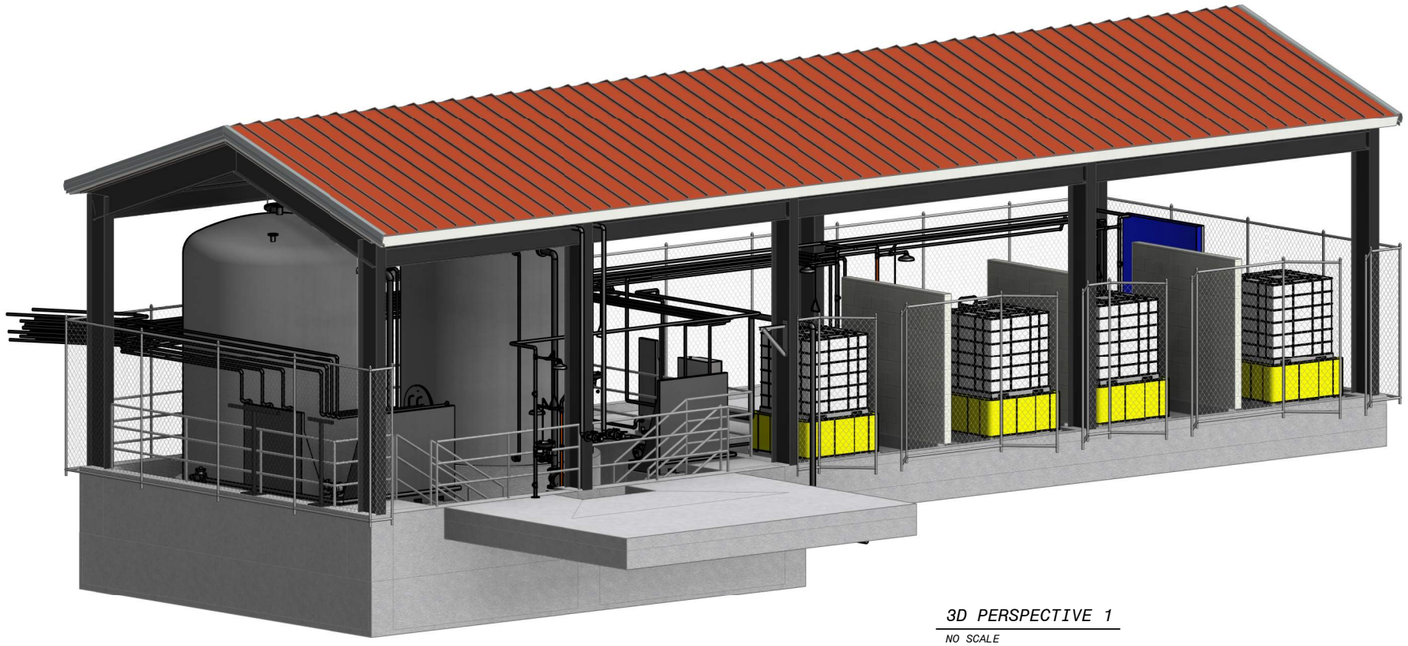

3D PERSPECTIVE 1

NO SCALE

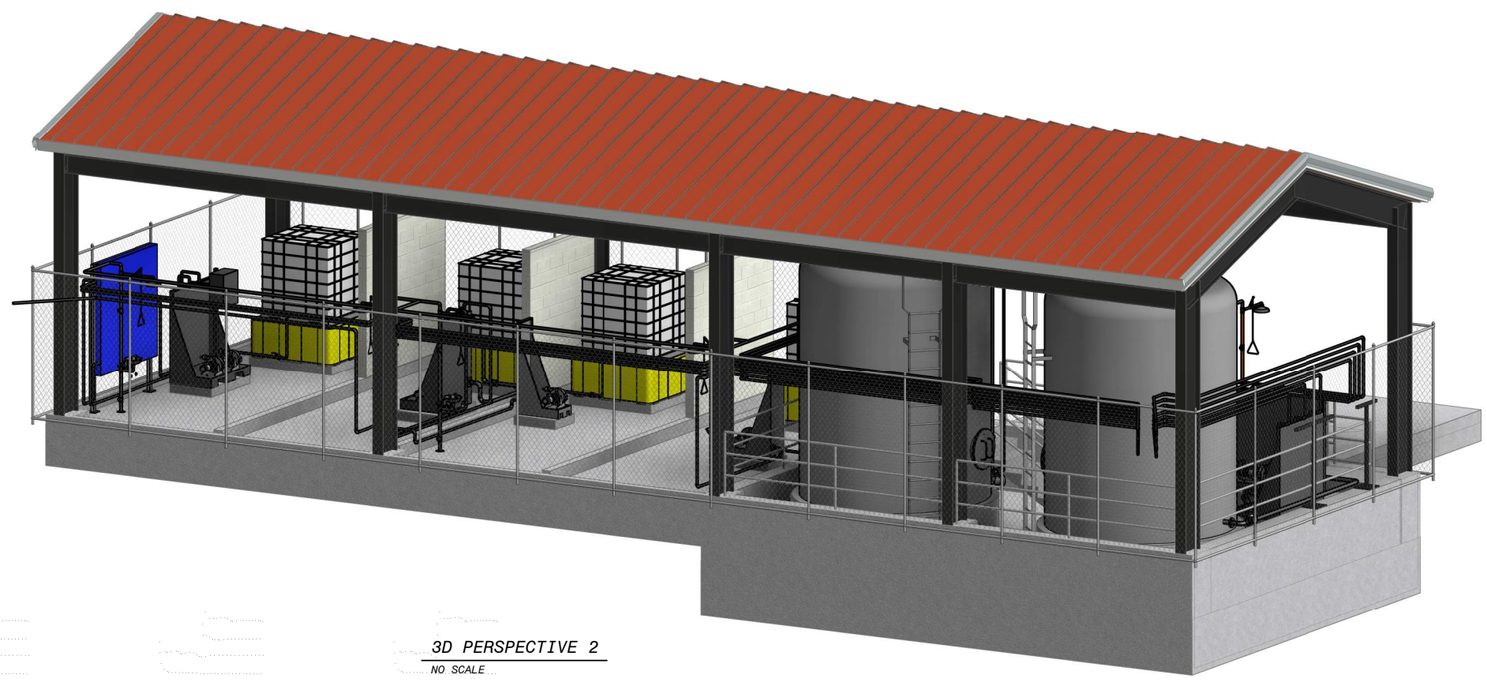

3D PERSPECTIVE 2

NO SCALE

COASTAL DEVELOPMENT PERMIT PLANS

| NO. | BY | CHK | APP | REVISIONS AND RECORD OF USE | DATE |
|---|---|---|---|---|---|
| B | ADV | RWF | EVB | 60% SUBMITTAL | 7/30/2019 |
| A | ADV | RWF | EVB | 30% SUBMITTAL | 3/5/2019 |

BLACK & VEATCH

JOINT VENTURE

FILANC

BLACK & VEATCH

CITY OF MORRO BAY
MORRO BAY WATER
RECLAMATION FACILITY (WRF)

CHEMICAL FACILITY - OVERALL
CIVIL-MECHANICAL
3D VIEWS

DESIGNED: ADV
DETAILED: MAK
CHECKED:
APPROVED: Approver
DATE:

0 1/2 1

IF THIS BAR DOES NOT MEASURE 1" THEN DRAWING IS NOT TO FULL SCALE

PROJECT NO.
400530

90-M-001

SHEET
OF

PLOTTED: 7/30/2019 7:39:57 AM

D400530

NOTES:
1. AREA TO BE COATED PER THE REQUIREMENTS OF SPECIFICATION 099724.

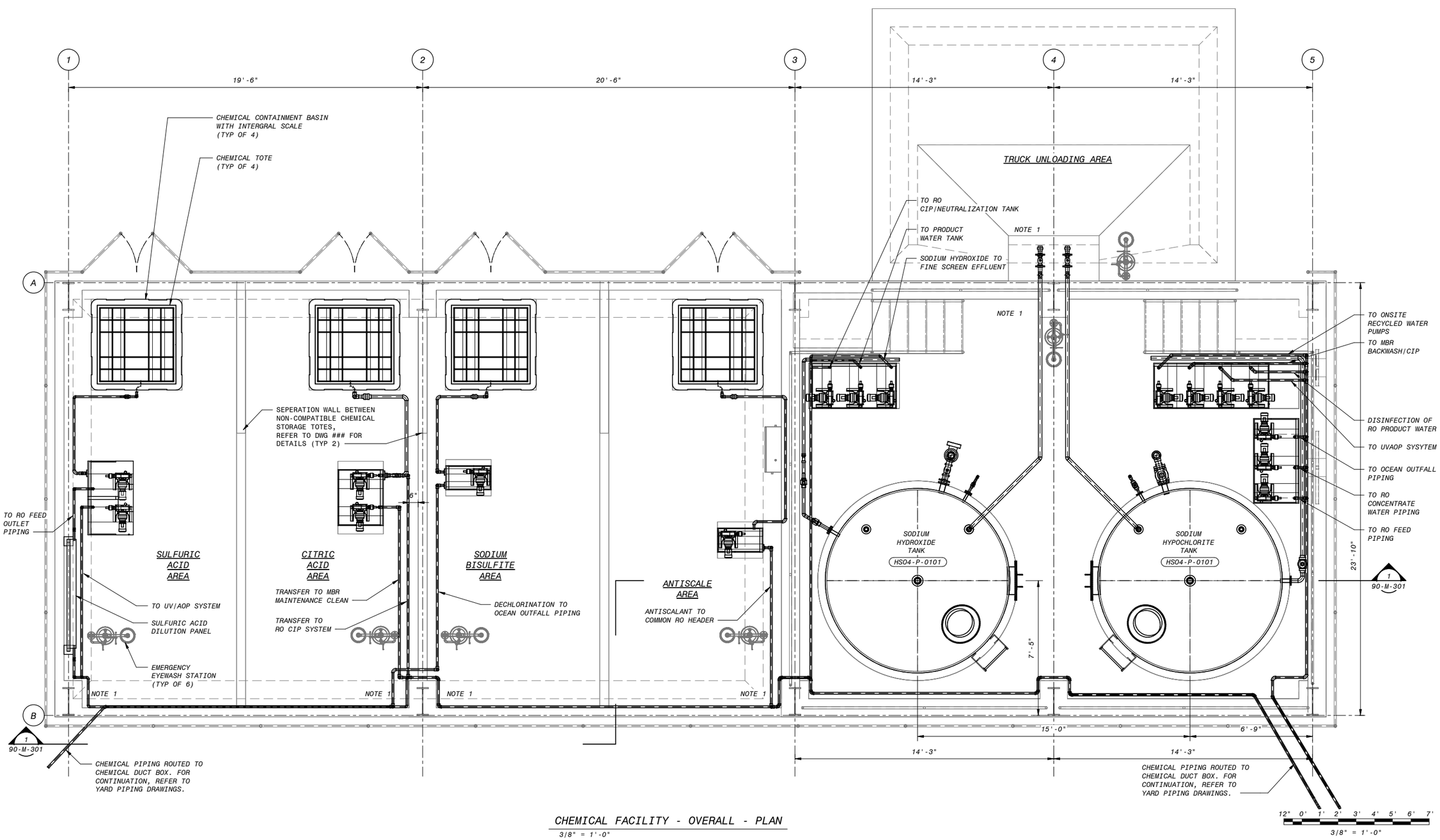


CHEMICAL FACILITY - OVERALL - PLAN
3/8" = 1'-0"

COASTAL DEVELOPMENT PERMIT PLANS

| NO. | BY | CHK | APP | REVISIONS AND RECORD OF USE | DATE |
|---|---|---|---|---|---|
| B | ADV | RWF | EVB | 60% SUBMITTAL | 7/30/2019 |
| A | ADV | RWF | EVB | 30% SUBMITTAL | 3/5/2019 |

BLACK & VEATCH
JOINT VENTURE
FILANC
BLACK & VEATCH

CITY OF MORRO BAY
MORRO BAY WATER
RECLAMATION FACILITY (WRF)

CHEMICAL FACILITY - OVERALL
CIVIL-MECHANICAL
PLAN

DESIGNED: ADV
DETAILED: MAK
CHECKED:
APPROVED:
DATE:

0 1/2 1
IF THIS BAR DOES NOT MEASURE 1" THEN DRAWING IS NOT TO FULL SCALE

PROJECT NO.
400530

90-M-101
SHEET
OF

PLOTTED: 7/30/2019 7:45:59 AM
D400530

NOTES:

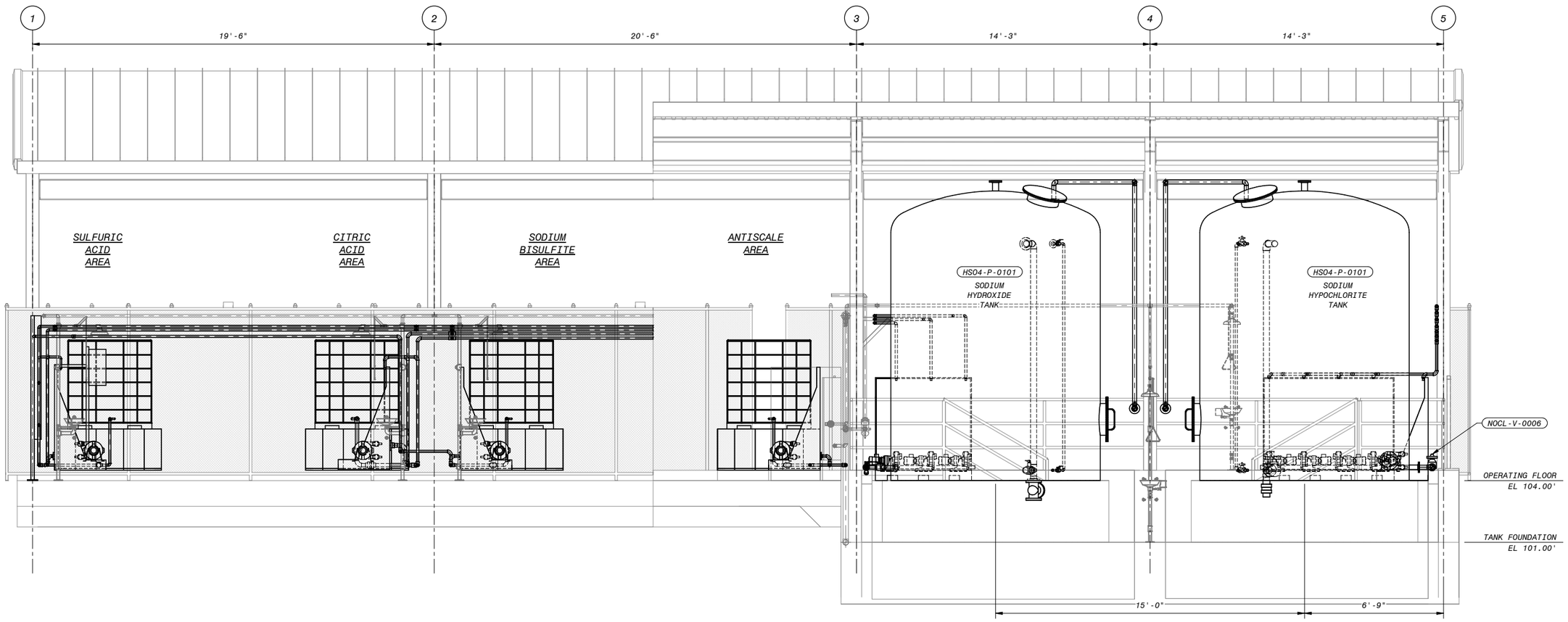


1 SECTION
90-M-101 3/8" = 1'-0"

12" 0' 1' 2' 3' 4' 5' 6' 7'
3/8" = 1'-0"

COASTAL DEVELOPMENT PERMIT PLANS

| NO. | BY | CHK | APP | DATE | REVISIONS AND RECORD OF USE |
|---|---|---|---|---|---|
| B | ADV | RWF | EVB | 7/30/2019 | 60% SUBMITTAL |
| A | ADV | RWF | EVB | 3/5/2019 | 30% SUBMITTAL |

BLACK & VEATCH

JOINT VENTURE

FILANC

BLACK & VEATCH

CITY OF MORRO BAY
MORRO BAY WATER
RECLAMATION FACILITY (WRF)

CHEMICAL FACILITY - OVERALL
CIVIL-MECHANICAL
SECTION AND DETAILS 1

DESIGNED: ADV
DETAILED: MAK
CHECKED:
APPROVED:
DATE:

0 1/2 1
IF THIS BAR DOES NOT MEASURE 1" THEN DRAWING IS NOT TO FULL SCALE

PROJECT NO.
400530

90-M-301
SHEET
OF

PLOTTED: 7/30/2019 7:43:59 AM
D400530

## EQUIPMENT IDENTIFICATION DESCRIPTION

AREA CODE - DENOTES ASSOCIATED AREA
SYSTEM CODE - DENOTES ASSOCIATED SYSTEM STREAM
FUNCTION CODE - DENOTES ASSOCIATED EQUIPMENT ABBREVIATION
SEQUENCE CODE - UNIQUE ALPHA-NUMERIC IDENTIFIER

AAA- SSS- FFF - 9999

## PIPELINE IDENTIFICATION DESCRIPTION

PIPE SIZE - INCHES UNLESS OTHERWISE NOTED
PROCESS CODE - DENOTES ASSOCIATED PROCESS STREAM
MATERIAL CODE - DENOTES ASSOCIATED MATERIAL ABBREVIATION

SSS - PPP - MTL

## LINE SYMBOLS

- MAJOR PROCESS PIPING OR FLOW CHANNEL
- SECONDARY PROCESS PIPING
- MISCELLANEOUS PIPING
- SCREENED LINE DENOTES EXISTING PIPE OR EQUIPMENT
- DASHED LINE DENOTES FUTURE PIPE AND EQUIPMENT
- ELECTRIC SIGNAL
- HYDRAULIC SIGNAL
- PNEUMATIC SIGNAL
- SIGNAL CONNECTION POINT
- CONTROL SYSTEM BACKBONE NETWORK SIGNAL (ETHERNET)
- FIELD DEVICE NETWORK SIGNAL (ETHERNET)
- NON-STANDARD OR INDEPENDENT CONTROL SYSTEM NETWORK SIGNAL (AS NOTED ON DRAWINGS)

B | I-XX — SIGNAL LINE GOING TO ANOTHER SHEET
B | I-XX — SIGNAL LINE FROM ANOTHER SHEET (MATCH LETTERS)
B | I-XX — PROCESS LINE COMING/GOING TO/FROM ANOTHER SHEET
MATCH SHEET NO. IDENTIFIER
MATCH LINE NO.
B — SIGNAL CONNECTION WITHIN THE SAME SHEET
FLOW ARROW FOR PROCESS PIPING
PROCESS LINES CROSSING (NOT CONNECTED)

## MECHANICAL EQUIPMENT SYMBOLS

- VAPORIZER: AMBIENT
- PARTICULATE FILTER
- ROTARY SCROLL COMPRESSOR
- AIR FILTER
- WATER FILTER: CARTRIDGE TYPE
- WATER FILTER: MEMBRANE TYPE
- MIXER
- COMPRESSOR
- VALVE: MATERIAL HANDLING ROTARY
- AIR REGULATOR
- STATIC MIXER
- HEAT EXCHANGER: TYPE 1
- HEAT EXCHANGER: TYPE 2
- HEAT EXCHANGER: FINNED TUBE
- HEAT EXCHANGER: SHELL & TUBE
- HEAT EXCHANGER: PLATE & FRAME
- HEAT EXCHANGER: SPIRAL
- HEAT EXCHANGER: DOUBLE PIPE
- HEAT EXCHANGER: AIR
- BOILER
- AFTERCOOLER
- FILTER SEPARATOR
- S — SILENCER
- HYDROCYCLONE
- SPRAY BAR

## PUMP & BLOWER SYMBOLS

- CENTRIFUGAL PUMP OR OTHER TYPE NOT SPECIFIED
- SUBMERGED CENTRIFUGAL PUMP
- SCREW (LIFT) PUMP
- ROTARY PUMP
- PROGRESSING CAVITY PUMP
- POSITIVE DISPLACEMENT PUMP
- PLUNGER PUMP
- VERTICAL PUMP
- SUMP PUMP
- CENTRIFUGAL FAN
- CENTRIFUGAL BLOWER
- POSITIVE DISPLACEMENT BLOWER
- COMPRESSOR: RECIPROCATING
- COMPRESSOR: ROTARY SCREW
- COMPRESSOR: LIQUID RING
- MOTOR DRIVEN DIAPHRAGM METERING PUMP
- S — SOLENOID PUMP
- PERISTALTIC PUMP
- DRUM PUMP
- DOUBLE DIAPHRAGM PUMP
- ELECTRIC MOTOR

## WATER & WASTEWATER SYMBOLS

- OZONE GENERATOR WITH POWER SUPPLY
- OZONE GENERATOR
- GRIT CONCENTRATOR & DEWATERING SCREW
- BAR SCREEN: MECHANICAL
- GRIT COLLECTOR: VORTEX TYPE
- RECTANGULAR BASIN
- SOLIDS COLLECTOR
- SOLIDS COLLECTOR W/SETTLING PLATES
- RECTANGULAR SEDIMENTATION BASIN
- UV HORIZONTAL BULBS
- MANUAL BAR SCREEN
- GAS FLARE
- GRIT CLASSIFIER
- GRAVITY FILTER
- GRAVITY THICKENER
- CIRCULAR SEDIMENTATION BASIN
- DAF
- BELT FILTER PRESS
- GRAVITY BELT THICKENER
- CENTRIFUGE
- RECTANGULAR SEDIMENTATION BASIN WITH SETTLING PLATES
- GRIT BASIN
- SLUDGE GRINDER: INLINE
- SLUDGE GRINDER: CHANNEL MOUNTED
- GRIT CONCENTRATOR

## PRIMARY ELEMENT & FITTING SYMBOLS

- DIAPHRAGM SEAL
- PRIMARY FLOW ELEMENT: ORIFICE PLATE
- PRIMARY FLOW ELEMENT: FLUME
- PRIMARY FLOW ELEMENT: TURBINE OR PROPELLER-TYPE
- M — PRIMARY FLOW ELEMENT: ELECTROMAGNETIC
- ΔT — THERMAL DISPERSION OR THERMAL MASS TYPE FLOW ELEMENT
- PRIMARY FLOW ELEMENT: TRANSIT-TIME ULTRASONIC
- FLOW CONDITIONER
- LE CON — CONDUCTANCE TYPE LEVEL SENSOR
- LE RAD — RADAR TYPE LEVEL SENSOR
- LE GWR — GUIDED WAVE RADAR TYPE LEVEL SENSOR
- ANNULAR TYPE DIAPHRAGM SEAL
- PRIMARY FLOW ELEMENT: POSITIVE DISPLACEMENT
- PRIMARY FLOW ELEMENT: VENTURI TUBE, FLOW NOZZLE, OR FLOW TUBE. * SEE MEASUREMENT SYMBOL NOTATIONS LIST
- PRIMARY FLOW ELEMENT: WEIR
- PRIMARY FLOW ELEMENT: PITOT TUBE
- PRIMARY FLOW ELEMENT: CORIOLIS
- HORN OR SIREN
- FG — ROTAMETER
- LE US — ULTRASONIC TYPE LEVEL SENSOR
- LE DP — PRESSURE SENSING LEVEL SENSOR
- PILOT LIGHT
- REDUCER - CONCENTRIC
- REDUCER - ECCENTRIC
- FLANGE
- D — DRAIN - BELL-UP
- D — DRAIN - FUNNEL
- FLEXIBLE CONNECTION
- CAP
- PLUG
- T — TRAP
- FLAME CHECK
- SURGE CHAMBER
- FLAME ARRESTER
- SEDIMENT TRAP
- P — INSTRUMENT PURGE OR FLUSHING DEVICE UNION
- HOSE CONNECTION
- STRAINER - Y TYPE
- STRAINER - BASKET
- Q — QUICK CONNECT
- VENT
- VENT - SCREENED
- COUPLING
- LG — SIGHTGLASS
- MOISTURE SEPARATOR
- EXPANSION LOOP
- SUCTION DIFFUSER
- THERMOWELL

## CHEMICAL FEED EQUIPMENT SYMBOLS

- DIFFUSER: TANK
- DIFFUSER: CHANNEL
- INJECTOR
- RUPTURE DISK
- PULSATION DAMPNER
- CHLORINE CYLINDER
- VAPOR SUPERHEATER
- PRESSURE BUILDING COIL
- SPECTACLE, BLIND, CLOSED
- SPECTACLE, BLIND, OPEN
- CALIBRATION COLUMN
- EXPANSION TANK OR FUNNEL
- WEIGH SCALE
- DRIP LEG HEATER
- TOTE
- AS — AUTOMATIC SWITCHOVER
- PASTE TYPE LIME SLAKER
- EDUCTOR
- GAS FEEDER
- EVAPORATOR
- DRY CHEMICAL FEEDER
- TON CONTAINER
- POLYMER BLENDER FEEDER
- POLYMER BLENDER FEEDER
- POLYMER INJECTION RING
- DIFFUSER
- DIFFUSER - PLAN
- CO2 VAPORIZOR
- COMBINATION SHOWER/ EYEWASH FOUNTAIN
- EYEWASH FOUNTAIN
- SHOWER

## VALVE & GATE SYMBOLS

- GATE: SLUICE OR SLIDE
- VALVE: GATE OR OTHER TWO-WAY TYPE NOT OTHERWISE IDENTIFIED
- VALVE: BALL
- VALVE: GLOBE
- VALVE: BUTTERFLY
- VALVE: ECCENTRIC PLUG
- VALVE: NON-ECCENTRIC PLUG
- VALVE: THREE WAY
- VALVE: FOUR WAY
- VALVE: CHECK
- VALVE: DIAPHRAGM
- VALVE: VPORT BALL
- VALVE: MUD
- VALVE: THERMAL SHUTOFF
- VALVE: NEEDLE
- VALVE: SLEEVE
- GATE: FLAP
- VALVE: VENTED BALL
- VALVE: DIVERTER
- VALVE: PRESSURE REDUCING
- VALVE: PRESSURE SUSTAINING
- VALVE: PRESSURE REDUCING (SELF ACTUATING TYPE)
- VALVE: PRESSURE SUSTAINING (SELF ACTUATING TYPE)
- P — VALVE: PILOT ACTUATED RELIEF
- VALVE: VACUUM RELIEF
- VALVE: PRESSURE RELIEF
- VALVE: PRESSURE/VACUUM RELIEF
- VALVE: ANGLE
- VALVE: SET STOP
- VALVE: PINCH
- VALVE: STOP CHECK
- VALVE: TELESCOPING
- VALVE: COMBINATION AIR
- VALVE: AIR RELEASE
- VALVE: AIR VACUUM
- VALVE: CHLORINE WITH YOKE
- M — CHLORINE VACUUM REGULATOR
- VALVE: KNIFE GATE
- BACKFLOW PREVENTER
- VACUUM BREAKER
- EXPLOSION RELIEF
- VALVE: GENERIC ROTARY

## VALVE AND GATE ACTUATOR SYMBOLS

- HANDWHEEL ACTUATOR
- S — SOLENOID
- S R — SOLENOID - MANUAL RESET
- S R R — SOLENOID - REMOTE RESET
- PRESSURE BALANCED DIAPHRAGM
- M — INTELLIGENT ELECTRIC
- M SM — SMALL MOTOR ACTUATOR
- I/P — CURRENT - TO-PNEUMATIC ACTUATOR
- E/H — ELECTRIC-HYDRAULIC
- SPRING-DIAPHRAGM ACTUATOR OR OTHERWISE UNSPECIFIED
- P — PNEUMATIC ACTUATOR
- P DA — PNEUMATIC ACTUATOR DOUBLE ACTING
- P SC — PNEUMATIC ACTUATOR SPRING CLOSE
- P SO — PNEUMATIC ACTUATOR SPRING OPEN
- FLOAT OPERATED VALVE
- SPRING OR WEIGHT ACTUATED RELIEF OR SAFETY VALVE ACTUATOR LOADED VALVE
- QUICK OPENING VALVE
- QUICK CLOSING VALVE
- LOADING/BACK PRESSURE VALVE

## MATERIAL HANDLING EQUIPMENT SYMBOLS

- CYCLONE SEPARATER
- DUMPSTER
- BIN: LIVE BOTTOM
- BIN: SLIDING FRAME
- SCREEN: SINGLE VIBRATORY
- SCREEN: DOUBLE VIBRATORY
- GRINDER
- BIN - CLOSED TOP
- BIN - OPEN TOP
- HORIZONTAL BAR SCREEN
- MIXER: PUGMILL
- MIXER: BLENDER
- CONVEYOR: BELT
- CONVEYOR: VIBRATORY
- PISTON CAKE PUMP: SINGLE
- PISTON CAKE PUMP: DOUBLE
- CONVEYOR: SCREW
- HOPPER
- DUST HOPPER

## GENERAL NOTES

1. IN GENERAL, THE P&ID SYMBOLS AND DEVICE IDENTIFICATIONS ARE BASED ON INTERNATIONAL SOCIETY OF AUTOMATION, STANDARD PRACTICE ANSI/ISA-5.1 (2009). SOME MODIFICATIONS, ADDITIONS, AND ALTERATIONS HAVE BEEN MADE AS NEEDED TO ACCOMMODATE THE PROJECT REQUIREMENTS.
2. SOME CONTROL AND INTERLOCK REQUIREMENTS WHICH CAN BE MORE CLEARLY ILLUSTRATED ON SCHEMATIC DRAWINGS HAVE BEEN OMITTED FROM THE P&ID DRAWINGS.
3. THIS IS A GENERAL LEGEND SHEET. SOME SYMBOLS AND ABBREVIATIONS MAY NOT BE UTILIZED ON THIS SPECIFIC PROJECT.
4. PIPING AND EQUIPMENT LEGEND APPLIES TO P&ID SHEETS ONLY AND MAY DIFFER FROM LEGENDS FOR OTHER SHEETS.

# COASTAL DEVELOPMENT PERMIT PLANS

| NO. | BY | CHK | APP |
|---|---|---|---|
| A | BLB | TAH | EVB |

REVISIONS AND RECORD OF USE

60% SUBMITTAL — DATE 7/30/2019

BLACK & VEATCH
JOINT VENTURE
FILANC

CITY OF MORRO BAY
FILANC BLACK & VEATCH DB PROPOSAL
MORRO BAY WRF

LEGEND & ABBREVIATIONS
P&ID
SHEET 1

DESIGNED: BLB
DETAILED: PVR
CHECKED: TAH
APPROVED:
DATE:

0 1/2 1
IF THIS BAR DOES NOT MEASURE 1" THEN DRAWING IS NOT TO FULL SCALE

PROJECT NO. 400530

00-I-001
SHEET
OF

PLOTTED: 29-07-2019 14:30:55
D400530

## INSTRUMENT AND I/O ABBREVIATIONS
## MEANINGS OF IDENTIFICATION LETTERS

| LETTER | FIRST LETTER: MEASURED OR INITIATING VARIABLE | FIRST LETTER: VARIABLE MODIFIER | SUCCEEDING LETTERS: READOUT OR PASSIVE FUNCTION | SUCCEEDING LETTERS: OUTPUT OR ACTIVE FUNCTION | SUCCEEDING LETTERS: FUNCTION MODIFIER |
|---|---|---|---|---|---|
| A | ANALYSIS | | ALARM | | |
| B | BURNER, COMBUSTION | | USER'S CHOICE | USER'S CHOICE | USER'S CHOICE |
| C | USER'S CHOICE | | | CONTROL | CLOSE |
| D | USER'S CHOICE | DIFFERENTIAL | | | DEVIATION |
| E | VOLTAGE (EMF) | | SENSOR, PRIMARY ELEMENT | | |
| F | FLOW, FLOW RATE | RATIO (FRACTION) | | | |
| G | USER'S CHOICE | | GLASS, GAUGE, VIEWING DEVICE | | |
| H | HAND (MANUALLY INITIATED) | | | | HIGH |
| I | CURRENT (ELECTRICAL) | | INDICATE | | |
| J | POWER | | SCAN | | |
| K | TIME OR TIME-SCHEDULE | TIME RATE OF CHANGE | | CONTROL STATION | |
| L | LEVEL | | LIGHT | | LOW |
| M | USER'S CHOICE | MOMENTARY | | | MIDDLE OR INTERMEDIATE |
| N | USER'S CHOICE | | USER'S CHOICE | USER'S CHOICE | USER'S CHOICE |
| O | USER'S CHOICE | | ORIFICE (RESTRICTION) | | OPEN |
| P | PRESSURE OR VACUUM | | POINT (TEST CONNECTION) | | |
| Q | QUANTITY | INTEGRATE OR TOTALIZE | INTEGRATE OR TOTALIZE | | |
| R | RADIATION | | RECORD | | RUN |
| S | SPEED OR FREQUENCY | SAFETY | | SWITCH | STOP |
| T | TEMPERATURE | | | TRANSMIT | |
| U | MULTIVARIABLE | | MULTIFUNCTION | MULTIFUNCTION | |
| V | VIBRATION OR MECHANICAL ANALYSIS | | | VALVE, DAMPER OR LOUVER | |
| W | WEIGHT OR FORCE | | WELL, PROBE | | |
| X | UNCLASSIFIED | X-AXIS | ACCESORY DEVICES OR UNCLASSIFIED | UNCLASSIFIED | UNCLASSIFIED |
| Y | EVENT, STATE, OR PRESENCE | Y-AXIS | | AUXILIARY DEVICES | |
| Z | POSITION, DIMENSION | Z-AXIS | | DRIVE, ACTUATOR OR FINAL CTRL ELEMENT | |

*NOTE TO DESIGNER: UPDATE "USER'S CHOICE" FIELDS FOR EACH PROJECT.

## GENERAL NOTES

1. IN GENERAL, THE P&ID SYMBOLS AND DEVICE IDENTIFICATIONS ARE BASED ON INTERNATIONAL SOCIETY OF AUTOMATION, STANDARD PRACTICE ANSI/ISA-5.1 (2009). SOME MODIFICATIONS, ADDITIONS, AND ALTERATIONS HAVE BEEN MADE AS NEEDED TO ACCOMMODATE THE PROJECT REQUIREMENTS.
2. SOME CONTROL AND INTERLOCK REQUIREMENTS WHICH CAN BE MORE CLEARLY ILLUSTRATED ON SCHEMATIC DRAWINGS HAVE BEEN OMITTED FROM P&ID DRAWINGS.
3. THIS IS A GENERAL LEGEND SHEET. SOME SYMBOLS AND ABBREVIATIONS MAY NOT BE UTILIZED ON THIS SPECIFIC PROJECT. PIPING AND EQUIPMENT LEGEND APPLIES TO P&ID SHEETS.

## PIPELINE MATERIAL CODE ABBREVIATIONS

| | |
|---|---|
| DB-01 | POLYETHYLENE TUBING IN SCHEDULE 40 CPVC CARRIER PIPE |
| DB-02 | TEFLON TUBING IN SCHEDULE 40 CPVC CARRIER PIPE |
| DIP | SECTION 15061, DUCTILE IRON PIPE |
| SP | SECTION 15062, STEEL PIPE |
| PVC-XX | SECTION 15061, POLYVINYL CHLORIDE PIPE |
| PVC-01 | SCHEDULE 40 PVC WITH SOLVENT WELDED FITTINGS |
| PVC-02 | SCHEDULE 80 PVC WITH SOLVENT WELDED FITTINGS |
| PE-XX | SECTION 15067, MISCELLANEOUS PLASTIC PIPE, TUBING, AND ACCESSORIES |
| PE-06 | SECTION 15067, MISCELLANEOUS PLASTIC PIPE, TUBING, AND ACCESSORIES |
| CPVC-XX | SECTION 15067, MISCELLANEOUS PLASTIC PIPE, TUBING, AND ACCESSORIES |
| CPVC-01 | SCHEDULE 40 CPVC WITH SOLVENT WELDED FITTINGS |
| CPVC-02 | SCHEDULE 80 CPVC WITH SOLVENT WELDED FITTINGS |
| CRP-XX | SECTION 15060, MISCELLANEOUS PIPING AND PIPE ASSEMBLY |
| CRP-01 | CARPENTER 20 PIPE |
| HDPE | SECTION 02634, HIGH DENSITY POLYETHYLENE (HDPE) PRESSURE PIPE |
| SS-XX | SECTION 15064, STAINLESS STEEL PIPE, TUBING, AND ACCESSORIES |
| SS-02 | AERATION PIPING SCHEDULE 10, 304SS |
| SS-04 | PROCESS PIPING SCHEDULE 40, 304SS |
| SS-05 | PROCESS PIPING SCHEDULE 40, 316SS |
| CSG-XX | SECTION 15065, MISCELLANEOUS STEEL PIPE, TUBING, AND ACCESSORIES |
| CS-XX | SECTION 15065, MISCELLANEOUS STEEL PIPE, TUBING, AND ACCESSORIES |
| CS-02 | STANDARD WEIGHT STEEL WITH SOCKET WELDED FITTINGS |
| CS-03 | STANDARD WEIGHT STEEL WITH BUTTWELDED FITTINGS |
| CI-XX | SECTION 15069, CAST IRON SOIL PIPE AND ACCESSORIES |
| CU-XX | SECTION 15070, COPPER TUBING AND ACCESSORIES |

1. XX= numbers 01-20

## INSTRUMENT AND I/O ABBREVIATION DEFINITIONS

| | |
|---|---|
| AAH | ANALYZER ALARM HIGH |
| AAHH | ANALYZER ALARM HIGH-HIGH |
| AAL | ANALYZER ALARM LOW |
| AALL | ANALYZER ALARM LOW-LOW |
| AAX | ALARM HORN |
| AAL | STROBE ALARM LIGHT |
| AE | ANALYZER SENSOR |
| AI | ANALYZER INDICATION |
| AIT | ANALYZER INDICATING TRANSMITTER |
| ASH | ANALYZER SWITCH HIGH |
| ASHH | ANALYZER SWITCH HIGH-HIGH |
| CB | CONTROL BLOCK REFERENCE (SCADA LEVEL) |
| FA | TROUBLE |
| FAL | FLOW ALARM LOW |
| FAH | FLOW ALARM HIGH |
| FC | FLOW CONTROLLER |
| FI | FLOW DIGITAL INDICATOR (LED OR SCREEN) |
| FIC | FLOW INDICATING CONTROLLER |
| FE | PRIMARY FLOW ELEMENT/SENSOR |
| FG | FLOW SIGHT GAUGE |
| FIT | FLOW INDICATING TRANSMITTER |
| FQG | FLOW TOTALIZING GAUGE |
| FQIT | FLOW TOTALIZING INDICATING TRANSMITTER |
| FSH | FLOW SWITCH HIGH |
| FSL | FLOW SWITCH LOW |
| FY | FLOW SIGNAL CONVERTER, REPEATER, OR ISOLATOR |
| HIC | HAND INDICATING CONTROLLER |
| HMS | MOMENTARY PUSHBUTTON OR SELECTOR SWITCH |
| HS | HAND SWITCH |
| IE | CURRENT ELEMENT/SENSOR |
| IAH | CURRENT ALARM HIGH (MOTOR OVERLOAD) |
| ISH | CURRENT SWITCH HIGH USED TO DETECT HIGH TORQUE) |
| JA | POWER FAILURE ALARM |
| JI | POWER INDICATOR |
| JL | POWER INDICATING LIGHT |
| JIT | POWER INDICATING TRANSMITTER |
| KQI | TIME TOTALIZING INDICATOR |
| LAL | LEVEL ALARM LOW |
| LALL | LEVEL ALARM LOW-LOW |
| LAH | LEVEL ALARM HIGH |
| LAHH | LEVEL ALARM HIGH-HIGH |
| LE | PRIMARY LEVEL ELEMENT/SENSOR |
| LG | LEVEL SIGHT GAUGE |
| LI | LEVEL INDICATOR (LED OR SCREEN) |
| LSL | LEVEL SWITCH LOW |
| LSLL | LEVEL SWITCH LOW LOW |
| LSH | LEVEL SWITCH HIGH |
| LSHH | LEVEL SWITCH HIGH-HIGH |
| LY | LEVEL SIGNAL CONVERTER, ISOLATOR, OR REPEATER |
| OAH | TORQUE ALARM HIGH |
| OAHH | TORQUE ALARM HIGH HIGH |
| OSH | TORQUE SWITCH HIGH |
| OSHH | TORQUE SWITCH HIGH-HIGH |
| PAL | PRESSURE ALARM LOW |
| PALL | PRESSURE ALARM LOW-LOW |
| PAH | PRESSURE ALARM HIGH |
| PAHH | PRESSURE ALARM HIGH-HIGH |
| PDG | DIFFERENTIAL PRESSURE GAUGE |
| PDI | DIFFERENTIAL PRESSURE INDICATOR (LED OR SCREEN) |
| PDIT | DIFFERENTIAL PRESSURE INDICATING TRANSMITTER |
| PDAH | DIFFERENTIAL PRESSURE ALARM HIGGH |
| PDAHH | DIFFERENTIAL PRESSURE ALARM HIGH-HIGH |
| PDSH | DIFFERENTIAL PRESSURE SWITCH HIGH |
| PDSHH | DIFFERENTIAL PRESSURE SWITCH HIGH-HIGH |
| PDSL | DIFFERENTIAL PRESSURE SWITCH LOW |
| PDSLL | DIFFERENTIAL PRESSURE SWITCH LOW-LOW |
| PE | PRESSURE SENSOR |
| PG | PRESSURE GAUGE |
| PI | PRESSURE INDICATOR (LED OR SCREEN) |
| PIT | PRESSURE INDICATING TRANSMITTER |
| PSL | PRESSURE SWITCH LOW |
| PSH | PRESSURE SWITCH HIGH |
| SI | SPEED INDICATION (LED OR SCREEN) |
| SC | SPEED CONTROL |
| SIT | SPEED INDICATING TRANSMITTER |
| SSL | SPEED SWITCH LOW |
| SIT | SPEED INDICATING TRANSMITTER |
| TAH | TEMPERATURE ALARM HIGH |
| TAHH | TEMPERATURE ALARM HIGH-HIGH |
| TAL | TEMPERATURE ALARM LOW |
| TDI | DIFFERENTIAL TEMPERATURE INDICATOR (LED OR SCREEN) |
| TDIT | DIFFERENTIAL TEMPERATURE TRANSMITTER |
| TE | TEMPERATURE SENSOR/RESISTANCE |
| | TEMPERATURE DETECTOR |
| TSH | TEMPERATURE SWITCH HIGH |
| TSHH | TEMPERATURE SWITCH HIGH HIGH |
| TSL | TEMPERATURE SWITCH LOW |
| TG | TEMPERATURE GAUGE |
| TI | TEMPERATURE INDICATOR (LED OR SCREEN) |
| TIT | TEMPERATURE INDICATING TRANSMITTER |
| UA | MULTIVARIABLE/COMMON ALARM/COMMON FAULT |
| UCR | RUN COMMAND |
| UCS | STOP COMMAND |
| VAH | VIBRATION ALARM HIGH |
| WE | PRIMARY WEIGHT SENSOR/LOAD CELL |
| WG | WEIGHT GAUGE |
| WIT | WEIGHT INDICATING TRANSMITTER |
| YA | GENERAL ALARM EVENT |
| YI | EVENT INDICATION (LED OR SCREEN) |
| YIR | RUNNING INDICATION |
| YIS | STOPPED INDICATION |
| YL | EVENT INDICATING LIGHT |
| YLR | RUNNING INDICATING LIGHT |
| YLS | STOPPED INDICATING LIGHT |
| ZI | POSITION INDICATOR |
| ZC | POSITION SET POINT |
| ZIC | CLOSED INDICATION |
| ZIO | OPEN INDICATION |
| ZLC | CLOSED INDICATING LIGHT |
| ZLO | OPEN INDICATING LIGHT |
| ZSC | CLOSED POSITION SWITCH |
| ZSO | OPEN POSITION SWITCH |
| ZIT | POSITION INDICATING TRANSMITTER |
| ZT | POSITION TRANSMITTER |

## GENERAL INSTRUMENT SYMBOLS

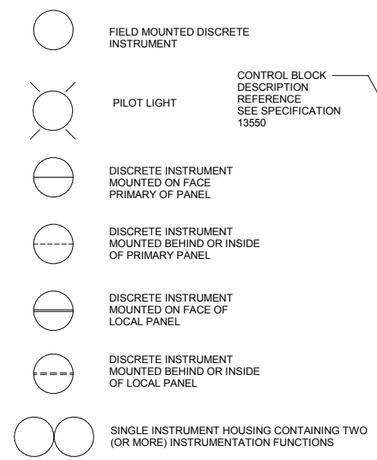


## DIGITAL SYSTEMS INTERFACE SYMBOLS

NOTE: REFER TO DETAILED SYSTEM SPECIFICATIONS FOR FUNCTIONAL DESCRIPTION. ALSO SEE I/O SCHEDULES FOR COMPLETE INPUT AND OUTPUT LISTINGS.

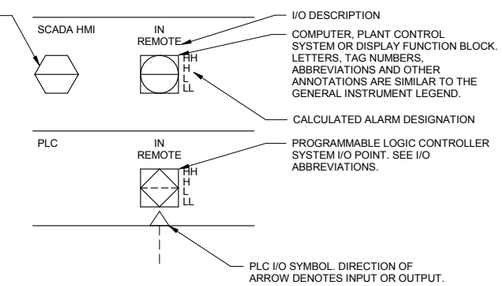


△ DISCRETE INPUT
▽ DISCRETE OUTPUT
▲ ANALOG INPUT
▼ ANALOG OUTPUT
△ PULSE INPUT

## INSTRUMENTATION SYMBOLOGY AND DESIGNATIONS

## FUNCTION DESIGNATIONS AND ABBREVIATIONS

### MEASUREMENT PRINCIPLE NOTATIONS

| | |
|---|---|
| CON | CONDUCTANCE |
| DP | DIFFERENTIAL PRESSURE SENSING |
| FLN | FLOW NOZZLE |
| FLT | FLOW TUBE |
| GWR | GUIDED WAVE RADAR |
| RAD | RADAR |
| US | ULTRASONIC |
| VENT | VENTURI TUBE |

### CALCULATED ALARM DESIGNATIONS

| | |
|---|---|
| L | LOW |
| LL | LOW-LOW |
| H | HIGH |
| HH | HIGH-HIGH |

### INDICATING LIGHT/ALARM DESIGNATIONS

| | |
|---|---|
| OVRLD | OVERLOAD |
| TRQ HI | TORQUE HIGH |
| TRQ HI-HI | TORQUE HIGH HIGH |

### INSTRUMENT FUNCTIONS

| | |
|---|---|
| K | GAIN OR ATTENUATE (INPUT:OUTPUT) |
| -K | GAIN AND REVERSE |
| Σ | ADD OR SUM (ADD AND SUBTRACT) |
| Δ | SUBTRACT (DIFFERENCE) |
| √‾ | EXTRACT SQUARE ROOT |
| ÷ | DIVIDE |
| F(X) | CHARACTERIZE SIGNAL |
| > | HIGH-SELECT |
| < | LOW-SELECT |
| × | MULTIPLY |
| ∫ | INTEGRATE (TIME INTEGRAL) |
| CH4 | METHANE |
| CL2 | CHLORINE RESIDUAL |
| CO2 | CARBON DIOXIDE |
| DO | DISSOLVED OXYGEN |
| H2S | HYDROGEN SULFIDE |
| LEL | LOWER EXPLOSIVE LIMIT |
| MCC | MOTOR CONTROL CENTER |
| MLSS | MIXED LIQUOR SUSPENDED SOLIDS |
| 02 | OXYGEN (PURITY) |
| 03 | OZONE |
| pH | pH |
| TURB | TURBIDITY |
| COND | CONDUCTIVITY |

### HAND SWITCH DESIGNATIONS

| | |
|---|---|
| FR | FORWARD-REVERSE |
| OCA | OPEN-CLOSE-AUTO |
| OOR | ON-OFF-REMOTE |
| OOA | ON-OFF-AUTO |
| LOR | LOCAL-OFF-REMOTE |
| OO | ON-OFF |
| OC | OPEN-CLOSE |
| LR | LOCAL REMOTE |
| HOA | HAND-OFF-AUTO |
| LOA | LOCAL-OFF-AUTO |
| HOR | HAND-OFF-REMOTE |
| OSC | OPEN-STOP-CLOSE |
| FWD | FORWARD |
| REV | REVERSE |

### TRANSDUCER & CONVERTER DESIGNATION

| | |
|---|---|
| E | VOLTAGE |
| FSK | FREQUENCY SHIFT KEYING |
| H | HYDRAULIC |
| I | CURRENT |
| P | PNEUMATIC PULSE |
| PD | PULSE DURATION |
| PF | PULSE FREQUENCY |
| R | RESISTANCE (ELECTRICAL) |

EXAMPLE: I/P = CURRENT TO PNEUMATIC TRANSDUCER

### POWER SUPPLY ABBREVIATIONS

| | |
|---|---|
| AS | AIR SUPPLY |
| ES | ELECTRIC SUPPLY |
| GS | GAS SUPPLY |
| HS | HYDRAULIC SUPPLY |
| NS | NITROGEN SUPPLY |
| SS | STEAM SUPPLY |
| WS | WATER SUPPLY |
| 24V | 24VDC |
| 120V | 120VAC |
| 480V | 480VAC |

120V — POWER SUPPLY SOURCE LABEL. USED ONLY WHERE NECESSARY TO HELP CLARIFY AN INSTRUMENT OR SYSTEM FUNCTION.

*NOTE TO DESIGNER: OR 24VDC OR 480VAC

COASTAL DEVELOPMENT PERMIT PLANS

| NO. | BY | CHK | APP |
|---|---|---|---|
| A | BLB | TAH | EVB |

60% SUBMITTAL
REVISIONS AND RECORD OF USE
7/30/2019
DATE

BLACK & VEATCH
JOINT VENTURE
FILANC
BLACK & VEATCH

CITY OF MORRO BAY
FILANC BLACK & VEATCH DB PROPOSAL
MORRO BAY WRF

LEGEND & ABBREVIATIONS
P&ID
SHEET 2

DESIGNED: BLB
DETAILED: PVR
CHECKED: TAH
APPROVED:
DATE:

0 1/2 1
IF THIS BAR DOES NOT MEASURE 1" THEN DRAWING IS NOT TO FULL SCALE

PROJECT NO.
400530

00-I-002
SHEET
OF

PLOTTED: 29-07-2019 14:30:55
D400530

## SYSTEM CODE ABBREVIATIONS

| | |
|---|---|
| AA | AIR-AERATION |
| ACE | ACETIC ACID |
| ACT | ACETYLENE |
| GAC | ACTIVATED CARBON - GRANULAR |
| AIR | PROCESS AIR |
| AER | AERATION SYSTEM |
| IA | AIR, INSTRUMENT |
| ARW | AIR WASH |
| ALS | ALUMINUM SULFATE |
| NSO4 | AMMONIUM SULFATE |
| NH3 | ANIHYDROUS AMMONIA |
| AS | ANTI-SEALANT |
| ANTI | ANTISCALANT |
| NHOH | AQUA AMMONIA |
| ARG | ARGON |
| ASH | ASH |
| BWH | BACKWASH - MEMBRANE/FILTER |
| BAL | BALLASTED FLOCCULATION |
| BIO | BIOSOLIDS |
| BIT | BIOTOWER |
| BLS | BLENDED SLUDGE |
| BNR | BNR |
| BRN | BRINE |
| CA | CITRIC ACID |
| CAL | CALCITE |
| CACL | CALCIUM HYPOCHLORITE |
| CATS | CALCIUM THIOSULFATE |
| C02 | CARBON DIOXIDE |
| CAS | CARBON SLURRY |
| HCO3 | CARBONIC ACID |
| CEN | CENTRATE |
| CEB | CHEMICAL ENHANCED BACKWASH - MEMBRANE |
| CL2 | CHLORINE |
| CLO2 | CHLORINE DIOXIDE |
| CA | CITRIC ACID |
| CIP | CLEAN IN PLACE |
| COA | COAGULATION |
| CAI | COMPRESSED AIR - INSTRUMENT |
| CMS | COMPRESSED AIR - SERVICE |
| CUS | COPPER SULFATE |
| CI | CORROSION INHIBITOR |
| DCL | DECHLORINATION |
| DET | DETERGENT |
| DWT | DEWATERING |
| FUE | DIESEL FUEL |
| DGG | DIGESTER GAS |
| DGM | DIGESTER GAS MIXING |
| DGS | DIGESTER SLUDGE |
| DGA | DIGESTION - AEROBIC |
| DIG | DIGESTION - ANAEROBIC |
| DCB | DISINFECTION CONTACT BASIN |
| DAF | DISSOLVED AIR FLOTATION |
| DRN | DRAINAGE |
| DWT | DEWATERING |
| EFP | EFFLUENT PUMPING |
| EXH | ENGINE EXHAUST |
| EQB | EQUALIZATION BASIN |
| FEC | FERRIC CHLORIDE |
| FES | FERRIC SULFATE |
| FRC | FERROUS CHLORIDE |
| FRS | FERROUS SULFATE |
| FLT | FILTRATION |
| FSW | FILTER SOLIDS WASTE |

| | |
|---|---|
| FUE | DIESEL FUEL |
| FLC | FLOCCULATION |
| GOX | GASEOUS OXYGEN |
| GSL | GASOLINE |
| GEN | GENERATOR |
| GRS | GREASE |
| GRT | GRIT |
| HSO4 | SULFURIC ACID |
| HEL | HELIUM |
| HFL | HYDRAULIC FLUID |
| HCL | HYDROCHLORIC ACID |
| HFS | HYDROFLUOSILIC ACID (FLUORIDE) |
| HYD | HYDROGEN |
| PER | HYDROGEN PEROXIDE |
| IA | AIR, INSTRUMENT |
| INC | INCINERATION |
| INFP | INFLUENT PUMPING |
| INT | INTAKE |
| LAG | LAGOON STORAGE |
| LAP | LAND APPLICATION |
| CAH | LIME - HYDRATED |
| CAO | LIME - QUICKLIME |
| LIM | LIME STABILIZATION |
| LOX | LIQUID OXYGEN |
| LPG | LP GAS OR PROPANE GAS |
| MGOH | MAGNESIUM HYDROXIDE |
| MEM | MEMBRANE |
| MEG | METHANE GAS |
| MTH | METHANOL |
| MXL | MIXED LIQUOR |
| NACL | SODIUM HYPOCHLORITE |
| NAOH | SODIUM HYDROXIDE |
| NG | NATURAL GAS |
| NHS | SODIUM BISULFATE |
| NIT | NITROGEN |
| NIO | NITROUS OXIDE |
| NOCL | SODIUM HYPOCHLORITE |
| NPW | NON-POTABLE WATER |
| ODC | ODOR CONTROL |
| OIL | OIL |
| FO | OIL - FUEL |
| OZN | OZONE |
| OZD | OZONE DESTRUCT |
| PPP | PHOSPHATE |
| PO4 | PHOSPHORIC ACID |
| PCL | POLYALUMINUM CHLORIDE |
| POLF | POLYMER |
| KMN | POTASSIUM PERMANGANATE |
| PAC | POWDERED ACTIVATE CARBON |
| PAR | PRE-AERATION |
| PSD | PRESEDIMENTATION |
| PRC | PRIMARY CLARIFICATION |
| PRS | PRIMARY SLUDGE |
| POLY | POLYMER |
| PRW | PLANT RECYCLED WATER |
| WWP | RAW WASTEWATER PUMPING |
| RWP | RAW WATER PUMPING |
| RWS | RAW WATER STORAGE |
| RCS | RECIRCULATED SLUDGE |
| RCW | RECLAIMED WATER |
| REF | REFRIGERANT |

| | |
|---|---|
| RES | RESIDUALS |
| RAS | RETURN ACTIVATED SLUDGE |
| RO | REVERSE OSMOSIS |
| SAN | SANITARY SYSTEM |
| SCR | SCREENINGS |
| SCM | SCUM |
| SCL | SECONDARY CLARIFICATION |
| SEP | SEPTAGE |
| SET | SETTLED WATER |
| SEW | SEWAGE |
| NAC | SODA ASH |
| NAL | SODIUM ALUMINATE |
| NAM | SODIUM ALUMINATE |
| NBC | SODIUM BICARBONATE |
| NHS | SODIUM BISULFITE |
| NCL | SODIUM CHLORIDE |
| NCL2 | SODIUM CHLORITE |
| NAF | SODIUM FLUORIDE |
| NAX | SODIUM HEXAMETAPHOSPHATE |
| NAOH | SODIUM HYDROXIDE |
| NOCL | SODIUM HYPOCHLORITE |
| NASF | SODIUM SILICOFLUORIDE |
| STM | STEAM |
| STS | STORM SEWER |
| STW | STORM WATER |
| SO2 | SULFUR DIOXIDE |
| HSO4 | SULFURIC ACID |
| SW | SURFACE WASH |
| TERT | TERTIARY TREATMENT |
| TPRS | THICKENED PRIMARY SLUDGE |
| TWAS | THICKENED WASTE ACTIVATED SLUDGE |
| THCK | THICKENING |
| TW | TREATED WATER |
| TF | TRICKLING FILTER |
| UV | ULTRAVIOLET |
| VAC | VACUUM |
| WW | WASH WATER |
| WAS | WASTE ACTIVATED SLUDGE |
| WWW | WASTE WASH WATER |
| CDW | WATER - CONDENSATE |
| COLW | WATER - COOLING |
| DW | WATER - DISTILLED WATER |
| FW | WATER - FIRE |
| IRW | WATER - IRRIGATION |
| OZW | WATER - OZONATED |
| SWT | WATER - SEAL |
| HW | WATER - WATER HEATING |
| DEIW | WATER DEIONIZED |
| NPW | WATER NON-POTABLE |
| PEW | WATER PLANT EFFLUENT |
| PW | WATER POTABLE |
| RW | WATER RAW |
| WWT | WET WEATHER TREATMENT |
| ZOP | ZINC ORTHOPHOSPHATE |
| PRW | PLANT RECYCLED WATER |

## PROCESS CODE ABBREVIATIONS

| | |
|---|---|
| AA | AIR-AERATION |
| ANTI | ANTISCALANT |
| AS | AIR-SCOUR |
| ATS | AUTOMATIC TRANSFER SWITCH |
| AWS | AERATED WAS |
| CA | CITRIC ACID |
| CAKE | DEWATERED SLUDGE CAKE |
| CHANNEL | PROCCESS CHANNEL |
| CIP | CLEAN IN PLACE |
| CIPR | REVERSE OSMOSIS CIP RETURN |
| CIPS | REVERSE OSMOSIS CIP SUPPLY |
| D | DRAIN |
| DRN | DRAIN |
| FA | FOUL AIR |
| FIW | FILTER INLET WASH |
| FBW | FILTER BACKWASH |
| FF | REVERSE OSMOSIS FORWARD FLUSH |
| FOW | FILTERED OUTFALL WATER |
| FSCM | FILTER SCUM |
| FSW | FILTER SOLIDS WASTE |
| GEN | GENERATOR FUEL |
| IA | INSTRUMENT AIR |
| IPR | INDIRECT POTABLE REUSE WATER |
| MFF | MICROFILTRATION FILTRATE |
| ML | MIXED LIQUOR |

| | |
|---|---|
| NACL | SODIUM HYPOCHLORITE |
| NAOH | SODIUM HYDROXIDE |
| NHS | SODIUM BISULFATE |
| NOCL | SODIUM HYPOCHLORITE |
| NPW | NON-POTABLE WATER |
| OF | OVERFLOW |
| PCR | REVERSE OSMOSIS PERMRATE |
| PEW | PLANT EFFLUENT WATER |
| POLY | POLYMER |
| POW | PLANT OUTFALL WATER |
| PRW | PLANT RECYCLED WATER |
| RAS | RETURNED ACTIVATED SLUDGE |
| RCW | RECLAIMED WATER |
| ROC | REVERSE OSMOSIS CONCENTRATE |
| ROF | REVERSE OSMOSIS FEED |
| ROP | REVERSE OSMOSIS PERMEATE |
| SA | SULFURIC ACID |
| SAN | SANITARY SEWER |
| UVE | ULTRAVIOLET TREATMENT EFFLUENT |
| WAS | WASTE ACTIVATED SLUDGE |
| WWR | WASTEWATER-RAW |
| WWS | WASTEWATER-SCREENED |

## FUNCTION CODE ABBREVIATIONS

| | |
|---|---|
| ACMB | ACTIVATION CHAMBER |
| ACD | AERATOR, COARSE BUBBLE DIFFUSED |
| AEFD | AERATOR, FINE PORE DIFFUSED |
| AFS | AERATOR, FLOATING SURFACE |
| AES | AERATOR, SURFACE |
| AFC | AFTERCOOLER |
| AD | AIR DRYER |
| AF | AIR FILTER |
| AR | AIR RECEIVER OR REGULATOR |
| AS | AIR SEPARATOR |
| AST | AIR STRIPPER |
| ATS | AUTOMATIC TRANSFER SWITCH |
| BFP | BACKFLOW PREVENTER |
| BSNA | BASIN, AERATION |
| BSNX | BASIN, ANOXIC/OXIC |
| BNR | BASIN, BNR |
| BSNC | BASIN, CHLORINE CONTACT |
| BSNO | BASIN, OXIC |
| RBSN | BASIN, RECTANGULAR SEDIMENTATION |
| BFPS | BELT FILTER PRESS |
| B | BIN (STORAGE - ALL TYPES) |
| BA | BIN ACTIVATOR |
| BLC | BLOWER, CENTRIFUGAL |
| BL | BLOWER, POSITIVE DISPLACEMENT |
| BLR | BOILER |
| BDZ | BULLDOZER |
| CCLM | CALIBRATION COLUMN |
| CFG | CENTRIFUGE |
| CGR | CLASSIFIER, GRIT |
| CHF | CHEMICAL FEEDER |
| CGS | CHLORINE GAS SCRUBBER |
| PCLR | CLARIFIER, PRIMARY |
| SCLR | CLARIFIER, SECONDARY |
| CGR | CLASSIFIER, GRIT |
| CW | CLEARWELL |
| CMP | COMPRESSOR |
| CMB | COMPRESSOR, LIQUID RING |
| CMR | COMPRESSOR, ROTARY SCREW |
| CMPS | COMPRESSOR, STEAM |
| CTR | CONTAINER, PROCESS |
| COB | CONVEYOR, BELT |
| COS | CONVEYOR, SCREW |
| CFA | COVER, ALUMINUM DOME BASIN |
| CFD | COVER, FIXED DIGESTER |
| CFL | COVER, FLOATING DIGESTER |
| DCG | COVER, GAS HOLDER |
| DCM | COVER, MEMBRANE |
| CRN | CRANE |
| CRG | CRANE, GANTRY |
| CRJ | CRANE, JIB |
| CRP | CRANE, PORTABLE GANTRY |
| CRT | CRANE, TRAVELLING BRIDGE |
| CYL | CYLINDER, CHLORINE |
| CYG | CYLINDER, GAS |

| | |
|---|---|
| DWS | DEWATERING SCREW |
| DPS | DIAPHRAGM SEAL |
| DIF | DIFFUSER, CHANNEL |
| DFB | DIFFUSER BANK |
| DIP | DIFFUSER, PIPELINE |
| DIR | DIFFUSER, TANK |
| DGE | DIGESTER, AEROBIC |
| DGAP | DIGESTER, ANAEROBIC PRIMARY |
| DGAS | DIGESTER, ANAEROBIC SECONDARY |
| DSUV | DISINFECTION UNIT, UV |
| DAF | DISSOLVED AIR FLOTATION THICKENER |
| DUC | DUST COLLECTOR |
| EDC | EDUCTOR |
| EQPE | ELECTRICAL EQUIPMENT, GENERAL |
| EWSH | EMERGENCY EYE WASH FOUNTAIN |
| ESHR | EMERGENCY SHOWER |
| EMEW | EMERGENCY SHOWER & EYEWASH |
| EQPB | EQUIPMENT, BUILDING SERVICES |
| EQPT | EQUIPMENT, GENERAL OR UNSPECIFIED |
| EV | EVAPORATOR |
| EXC | EXPANSION CHAMBER |
| FAX | FAN, AXIAL FLOW |
| FAN | FAN, CENTRIFUGAL |
| FST | FENCE STIRRER |
| FTSP | FILTER GAS PARTICULATE |
| FLC | FILTER, CARTRIDGE TYPE |
| FLT | FILTER, UNDERDRAINS OR PRESSURE |
| FSW | FILTER, SURFACE WASH EQUIPMENT |
| FTTNG | FITTING, MISCELLANEOUS |
| FAR | FLAME ARRESTER |
| FC | FLAME CHECK |
| FLCH | FLOCCULATOR, HORIZONTAL |
| FLCV | FLOCCULATOR, VERTICAL |
| FD | FLOOR DRAIN |
| FS | FLOW SPLITTER |
| FE | FLUME, PARSHALL |
| FMSP | FOAM SEPARATOR |
| FL | FORKLIFT |
| CHF | GAS FEEDER |
| GF | GAS FLARE |
| GWH | GAS WATER HEATER |
| GFL | GATE, FLAP |
| GSD | GATE, SLIDE |
| GSC | GATE, SLUICE |
| G | GATE, WEIR |
| GEN | GENERATOR, ENGINE (BACKUP POWER) |
| GBT | GRAVITY BELT THICKENER |
| GVT | GRAVITY THICKENER |
| GRD | GRINDER PULVERIZER |
| GRB | GRIT BASIN, VORTEX TYPE |
| GRV | GRIT SCREW CONCENTRATOR |
| HEX | HEAT EXCHANGER |
| HST | HOIST |

| | |
|---|---|
| HSC | HOIST, CHAIN |
| HSE | HOIST, WIRE ROPE |
| HYDF | HYDRANT, FIRE |
| HYDW | HYDRANT, WALL |
| HYC | HYDROCYCLONE |
| INJ | INJECTOR, CHEMICAL |
| LS | LIME SLAKER |
| LP | LIGHTING PANEL |
| LSP | LOCAL START PANEL |
| MFM | MEMBRANE |
| MBMF | MEMBRANE, MICROFILTRATION |
| MBNF | MEMBRANE, NANOFILTRATION |
| MBRO | MEMBRANE, REVERSE OSMOSIS |
| MBUF | MEMBRANE, ULTRAFILTRATION |
| MXC | MIXER, CARBON |
| FLM | MIXER, FLOCCULATION |
| M | MOTOR |
| MCC | MOTOR CONTROL CENTER |
| MXI | MIXER, IN-LINE |
| MXPG | MIXER, PUGMILL |
| MXR | MIXER, RAPID |
| MXS | MIXER, STATIC |
| MXP | MIXER, SUBMERSIBLE, PROP OR BLENDER |
| MM | MUFFIN MONSTER |
| ORD | OVERFLOW ROOF DRAIN |
| ODU | OZONE DESTRUCT UNIT |
| OGEN | OZONE GENERATOR |
| PSU | OZONE POWER SUPPLY UNIT |
| PP | PACKAGED PLANT |
| PCN | PARTICLE COUNTER |
| PLT | PELLETIZER |
| PS | PENSTOCK |
| PIPE | PIPE |
| PSE | PLATE SETTLER |
| INJ | POLYMER INJECTOR RING |
| PP | POWER PANEL |
| PBC | PRESSURE BUILDING COIL |
| PD | PULSATION DAMPNER |
| PAD | PUMP, AIR DIAPHRAGM |
| PCL | PUMP, CENTRIFUGAL |
| PDM | PUMP, DIAPHRAGM METERING |
| PHW | PUMP, HEATING WATER |
| PHE | PUMP, HORIZONTAL END SUCTION |
| PSC | PUMP, HORIZONTAL SPLIT CASE |
| PPS | PUMP, PERISTALTIC |
| PPL | PUMP, PLUNGER |
| PPC | PUMP, PROGRESSING CAVITY |
| PSE | PUMP, SCREW ENCLOSED |
| PSE | PUMP, SCREW OPEN |
| PCL | PUMP, SUBMERSIBLE |
| PCH | PUMP, SUBMERSIBLE CHOPPER |
| PSS | PUMP, SUBMERSIBLE SUMP |
| PSP | PUMP, SUMP |
| P | PUMP, GENERAL OR UNSPECIFIED |
| PVD | PUMP, VERTICAL DIFFUSION VANE |
| PVE | PUMP, VERTICAL END SUCTION |
| PVW | PUMP, VERTICAL WET PIT |

| | |
|---|---|
| RSV | RESERVOIR |
| RCO | RESIDUAL COLLECTOR |
| RM | ROTAMETER |
| RD | RUPTURE DISK |
| SAMP | SAMPLER |
| SCL | SCALE |
| SC | SCALE, WEIGHT |
| SCRHT | SCREEN, HORIZONTAL |
| SCRI | SCREEN, INLINE SLUDGE |
| SCRA | SCREEN, MANUAL OR MECH CLEANED BAR |
| SCRS | SCREEN, STEP |
| SCT | SCREEN, TRAVELLING WATER |
| SCR | SCREEN, VIBRATORY |
| SCU | SCRUBBER |
| SMC | SCUM COLLECTOR |
| SCW | SCUM WEIR - ROTATING |
| SEP | SEPARATOR, MOISTURE OR CYCLONE |
| SGT | SIGHT GLASS - TALL |
| SG | SIGHT GAUGE |
| SIL | SILENCER |
| SLC | SLUDGE COLLECTOR, CIRCULAR |
| GCLR | SLUDGE COLLECTOR, CROSS |
| SFC | SLUDGE COLLECTOR, FLOC-CLARIFYING |
| SCS | SLUDGE COLLECTOR, SEC CLARIFIERS |
| SSC | SLUDGE COLLECTOR, SOLIDS CONTACT |
| SLCS | SLUDGE COLLECTOR, STRAIGHT LINE |
| GRD | SLUDGE GRINDER, INLINE OR CHANNEL |
| SBL | SOLIDS BLENDER-INLINE |
| STR | STRAINER |
| STRB | STRAINER BASKET TYPE |
| STRY | STRAINER Y TYPE |
| SRCH | SURGE CHAMBER |
| SWB | SWITCH BOARD |
| TSA | TANK, ABOVE GROUND STORAGE |
| TCN | TANK, AMMONIA STORAGE |
| TCR | TANK, CRYOGENIC STORAGE |
| DWT | TANK, DOUBLE WALL |
| TSE | TANK, ELEVATED STORAGE |
| TX | TANK, EXPANSION |
| TNK | TANK, FRP CHEMICAL STORAGE |
| TNK | TANK, GENERAL OR UNSPECIFIED |
| TCP | TANK, METHANOL |
| SMPT | TANK, SAMPLER |
| TCS | TANK, CHLORINE CONTACTOR |
| TSW | TANK, FLAT TOP STEEL WATER |
| XFR | TRANSFORMER |
| TRP | TRAP, DRIP |
| TRPS | TRAP, SEDIMENT |
| TRK | TRUCK |
| TB | TURBINE |
| TBC | TURBINE COMPRESSOR |
| TBG | TURBINE ENGINE |
| UPS | UNINTERRUPTABLE POWER SUPPLY |
| UVE | UV REACTOR |
| UVL | UV REACTOR, HORIZONTAL OR VERTICAL |

| | |
|---|---|
| VB | VACUUM BREAK |
| VJTR | VACUUM EJECTOR |
| VRG | VACUUM REGULATOR |
| AVR | VALVE, AIR RELEASE |
| AVRV | VALVE, AIR-VACUUM |
| VAG | VALVE, ANGLE |
| VBM | VALVE, AWWA BALL |
| VBF | VALVE, AWWA BUTTERFLY |
| VBFP | VALVE, BACKFLOW PREVENTER |
| VBM | VALVE, BALL MISCELLANEOUS |
| VCK | VALVE, CHECK |
| VCN | VALVE, CONE |
| VDG | VALVE, DIAPHRAGM OPERATED |
| VGD | VALVE, DOUBLE DISC GATE |
| VPE | VALVE, ECCENTRIC PLUG |
| VER | VALVE, EXPLOSION RELIEF |
| VFW | VALVE, FOUR WAY |
| VG | VALVE, GATE |
| V | VALVE, GENERAL OR UNSPECIFIED |
| VGL | VALVE, GLOBE |
| VBI | VALVE, INDUSTRIAL BUTTERFLY |
| VKG | VALVE, KNIFE GATE |
| VMR | VALVE, MATERIAL HANDLING ROTARY |
| VMD | VALVE, MUD |
| VND | VALVE, NEEDLE |
| PTV | VALVE, PILOT |
| VPN | VALVE, PINCH |
| VPO | VALVE, PISTON OPERATED |
| VPL | VALVE, NON-ECCENTRIC PLUG |
| VPC | VALVE, PRESSURE REDUCING |
| VPC | VALVE, PRESSURE SUSTAINING |
| VSP | VALVE, PRESSURE RELIEF |
| VSPV | VALVE, PRESSURE/VACUUM RELIEF |
| VP | VALVE, PROCESS |
| VGR | VALVE, RESILIENT SEATED GATE |
| VS | VALVE, SAFETY |
| VSLV | VALVE, SLEEVE |
| VSL | VALVE, SOLENOID |
| VTV | VALVE, TELESCOPING |
| VTS | VALVE, THERMAL SHUTOFF |
| VTW | VALVE, THREE WAY |
| VVB | VALVE, VACUUM BREAKER |
| VSV | VALVE, VACUUM RELIEF |
| VVP | VALVE, V-PORT BALL |
| VAP | VAPORIZER |
| VFD | VARIABLE FREQUENCY DRIVE |
| VSLB | VESSEL, BOOT |
| WC | WEIR, CIPOLETTI |
| WR | WEIR, RECTANGULAR |
| WV | WEIR, V-NOTCH |
| WLHC | WELL, HORIZONTAL COLLECTOR |
| WLV | WELL, VERTICAL |

X = PROCESS CODE SUFFIX USED TO FURTHER SPECIFY A PROCESS STREAM (I.E. CL2_G FOR CHLORINE GAS OR CL2_S FOR CHLORINE SOLUTION)

| NO. | BY | CHK | APP | REVISIONS AND RECORD OF USE | DATE |
|---|---|---|---|---|---|
| A | BLB | TAH | EVB | 60% SUBMITTAL | 7/30/2019 |

BLACK & VEATCH

JOINT VENTURE

FILANC

BLACK & VEATCH

CITY OF MORRO BAY
FILANC BLACK & VEATCH DB PROPOSAL
MORRO BAY WRF

LEGEND & ABBREVIATIONS
P&ID
SHEET 3

DESIGNED: BLB
DETAILED: PVR
CHECKED: TAH
APPROVED:
DATE:

0 1/2 1
IF THIS BAR DOES NOT MEASURE 1" THEN DRAWING IS NOT TO FULL SCALE

PROJECT NO.
400530

00-I-003
SHEET
OF

COASTAL DEVELOPMENT PERMIT PLANS

PLOTTED: 29-07-2019 14:30:55
D400530

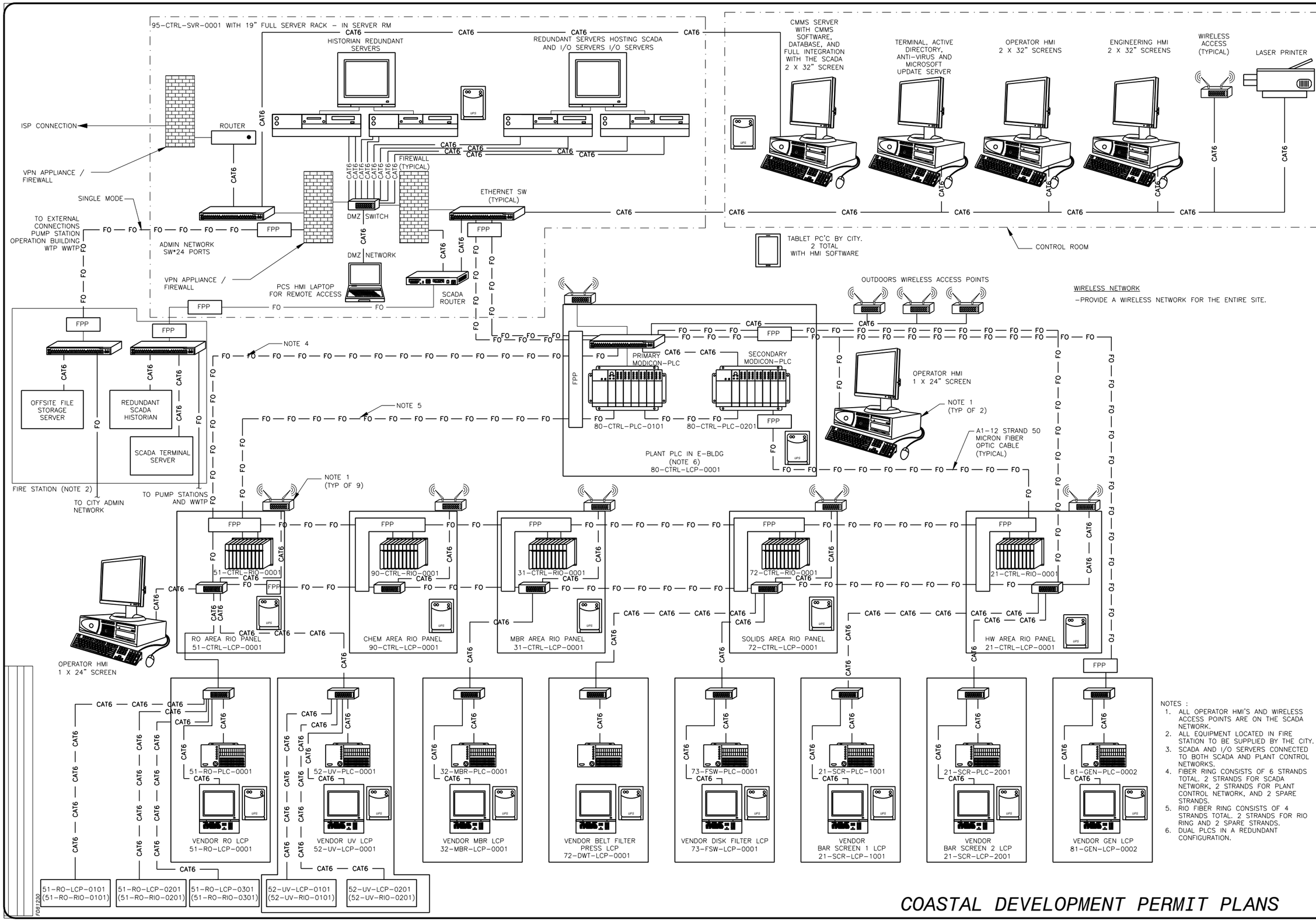


NOTES :

1. ALL OPERATOR HMI'S AND WIRELESS ACCESS POINTS ARE ON THE SCADA NETWORK.
2. ALL EQUIPMENT LOCATED IN FIRE STATION TO BE SUPPLIED BY THE CITY.
3. SCADA AND I/O SERVERS CONNECTED TO BOTH SCADA AND PLANT CONTROL NETWORKS.
4. FIBER RING CONSISTS OF 6 STRANDS TOTAL. 2 STRANDS FOR SCADA NETWORK, 2 STRANDS FOR PLANT CONTROL NETWORK, AND 2 SPARE STRANDS.
5. RIO FIBER RING CONSISTS OF 4 STRANDS TOTAL. 2 STRANDS FOR RIO RING AND 2 SPARE STRANDS.
6. DUAL PLCS IN A REDUNDANT CONFIGURATION.

| NO. | BY | CHK | APP | REVISIONS AND RECORD OF USE | DATE |
|---|---|---|---|---|---|
| B | BLB | TAH | EVB | 60% SUBMITTAL | 7-30-2019 |
| A | BLB | TAH | EVB | 30% SUBMITTAL | 5-5-2019 |

JOINT VENTURE

FILANC

BLACK & VEATCH

CITY OF MORRO BAY
FILANC B&V DB PROP
MORRO BAY WRF

NETWORK OVERALL DIAGRAM

DESIGNED: BLB
DETAILED: PVR
CHECKED: TAH
APPROVED:
DATE:

0 1/2 1
IF THIS BAR DOES NOT MEASURE 1" THEN DRAWING IS NOT TO FULL SCALE

PROJECT NO. 400530

00-I-701
SHEET XX OF XX

COASTAL DEVELOPMENT PERMIT PLANS

MAL79137, 7/29/2019 2:21:00 PM
MAL79137, 7/29/2019 2:22:39 PM
MAL79137
D81263
FD81230

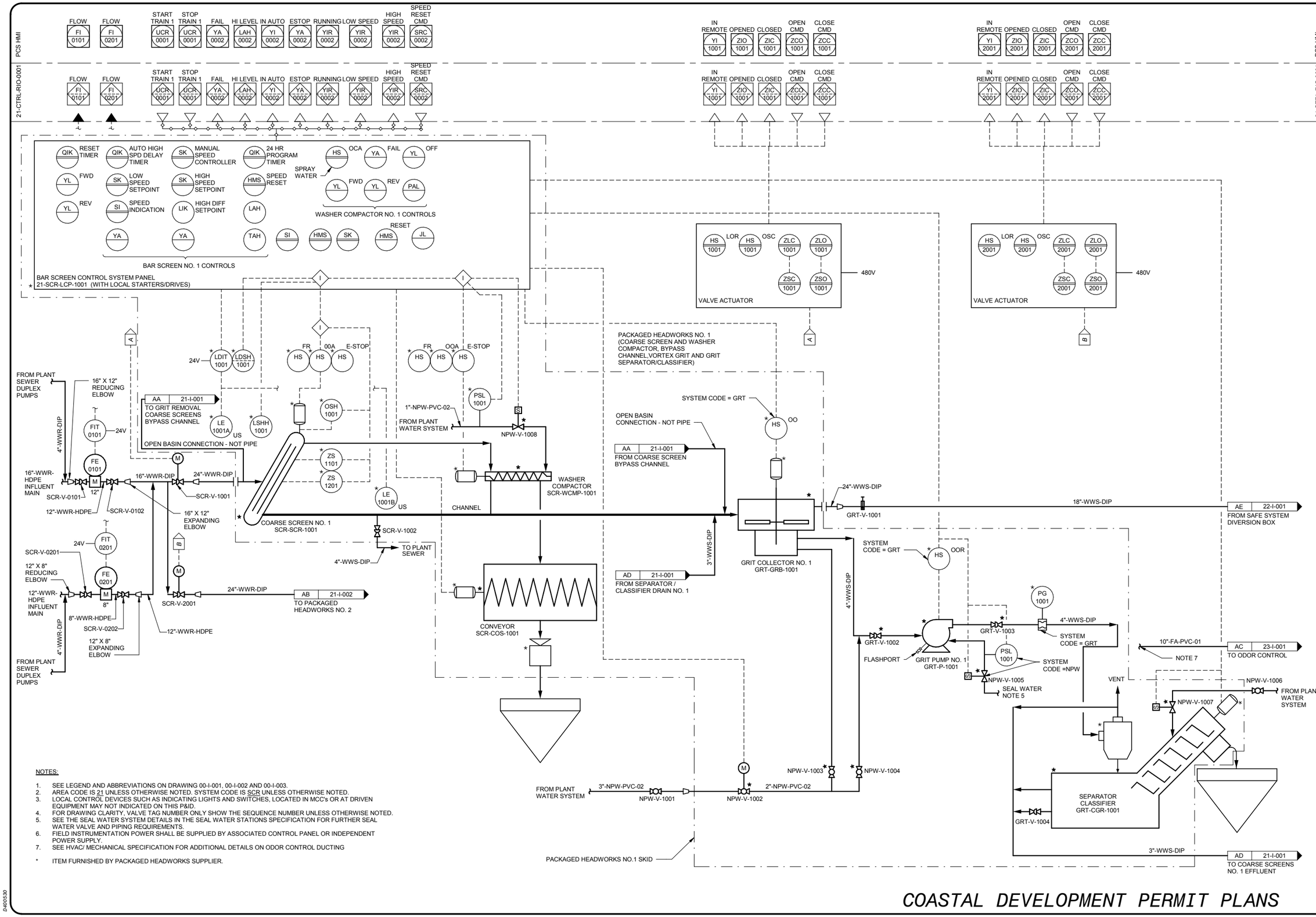


NOTES:

1. SEE LEGEND AND ABBREVIATIONS ON DRAWING 00-I-001, 00-I-002 AND 00-I-003.
2. AREA CODE IS 21 UNLESS OTHERWISE NOTED. SYSTEM CODE IS SCR UNLESS OTHERWISE NOTED.
3. LOCAL CONTROL DEVICES SUCH AS INDICATING LIGHTS AND SWITCHES, LOCATED IN MCC's OR AT DRIVEN EQUIPMENT MAY NOT INDICATED ON THIS P&ID.
4. FOR DRAWING CLARITY, VALVE TAG NUMBER ONLY SHOW THE SEQUENCE NUMBER UNLESS OTHERWISE NOTED.
5. SEE THE SEAL WATER SYSTEM DETAILS IN THE SEAL WATER STATIONS SPECIFICATION FOR FURTHER SEAL WATER VALVE AND PIPING REQUIREMENTS.
6. FIELD INSTRUMENTATION POWER SHALL BE SUPPLIED BY ASSOCIATED CONTROL PANEL OR INDEPENDENT POWER SUPPLY.
7. SEE HVAC/ MECHANICAL SPECIFICATION FOR ADDITIONAL DETAILS ON ODOR CONTROL DUCTING

* ITEM FURNISHED BY PACKAGED HEADWORKS SUPPLIER.

| NO. | BY | CHK | APP |
|---|---|---|---|
| B | BLB | TAH | EVB |
| A | BLB | TAH | EVB |

| DATE | REVISIONS AND RECORD OF USE |
|---|---|
| 7/30/2019 | 60% SUBMITTAL |
| 3/5/2019 | 30% SUBMITTAL |

BLACK & VEATCH

JOINT VENTURE

FILANC

BLACK & VEATCH

CITY OF MORRO BAY
MORRO BAY WATER
RECLAMATION FACILITY (WRF)

HEADWORKS AREA - HEADWORKS
P&ID
TRAIN 1

DESIGNED: BLB, TDE
DETAILED: PVR
CHECKED: TAH
APPROVED:
DATE:

0 1/2 1
IF THIS BAR DOES NOT MEASURE 1" THEN DRAWING IS NOT TO FULL SCALE

PROJECT NO.
400530

21-I-001
SHEET
OF

COASTAL DEVELOPMENT PERMIT PLANS

PLOTTED: 29-07-2019 16:37:06
D400530

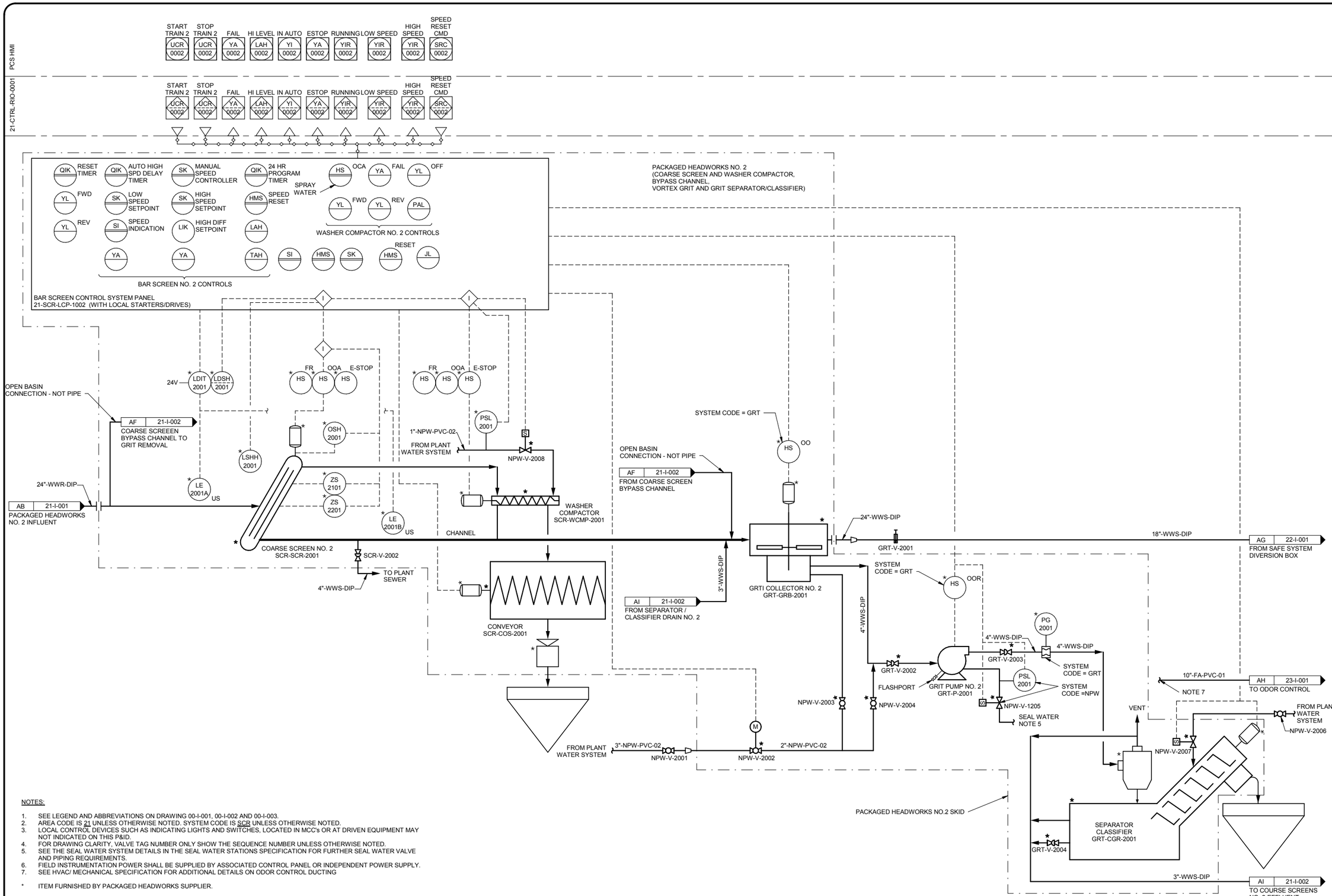


NOTES:

1. SEE LEGEND AND ABBREVIATIONS ON DRAWING 00-I-001, 00-I-002 AND 00-I-003.
2. AREA CODE IS 21 UNLESS OTHERWISE NOTED. SYSTEM CODE IS SCR UNLESS OTHERWISE NOTED.
3. LOCAL CONTROL DEVICES SUCH AS INDICATING LIGHTS AND SWITCHES, LOCATED IN MCC's OR AT DRIVEN EQUIPMENT MAY NOT INDICATED ON THIS P&ID.
4. FOR DRAWING CLARITY, VALVE TAG NUMBER ONLY SHOW THE SEQUENCE NUMBER UNLESS OTHERWISE NOTED.
5. SEE THE SEAL WATER SYSTEM DETAILS IN THE SEAL WATER STATIONS SPECIFICATION FOR FURTHER SEAL WATER VALVE AND PIPING REQUIREMENTS.
6. FIELD INSTRUMENTATION POWER SHALL BE SUPPLIED BY ASSOCIATED CONTROL PANEL OR INDEPENDENT POWER SUPPLY.
7. SEE HVAC/ MECHANICAL SPECIFICATION FOR ADDITIONAL DETAILS ON ODOR CONTROL DUCTING

* ITEM FURNISHED BY PACKAGED HEADWORKS SUPPLIER.

# COASTAL DEVELOPMENT PERMIT PLANS

| NO. | BY | CHK | APP | REVISIONS AND RECORD OF USE | DATE |
|---|---|---|---|---|---|
| B | BLB | TAH | EVB | 60% SUBMITTAL | 7/30/2019 |
| A | BLB | TAH | EVB | 30% SUBMITTAL | 3/5/2019 |

BLACK & VEATCH
JOINT VENTURE
FILANC
BLACK & VEATCH

CITY OF MORRO BAY
MORRO BAY WATER RECLAMATION FACILITY (WRF)

HEADWORKS AREA - HEADWORKS P&ID TRAIN 2

DESIGNED: BLB, TDE
DETAILED: PVR
CHECKED: TAH
APPROVED:
DATE:

0 1/2 1
IF THIS BAR DOES NOT MEASURE 1" THEN DRAWING IS NOT TO FULL SCALE

PROJECT NO. 400530

21-I-002
SHEET
OF

PLOTTED: 29-07-2019 16:37:07
D400530

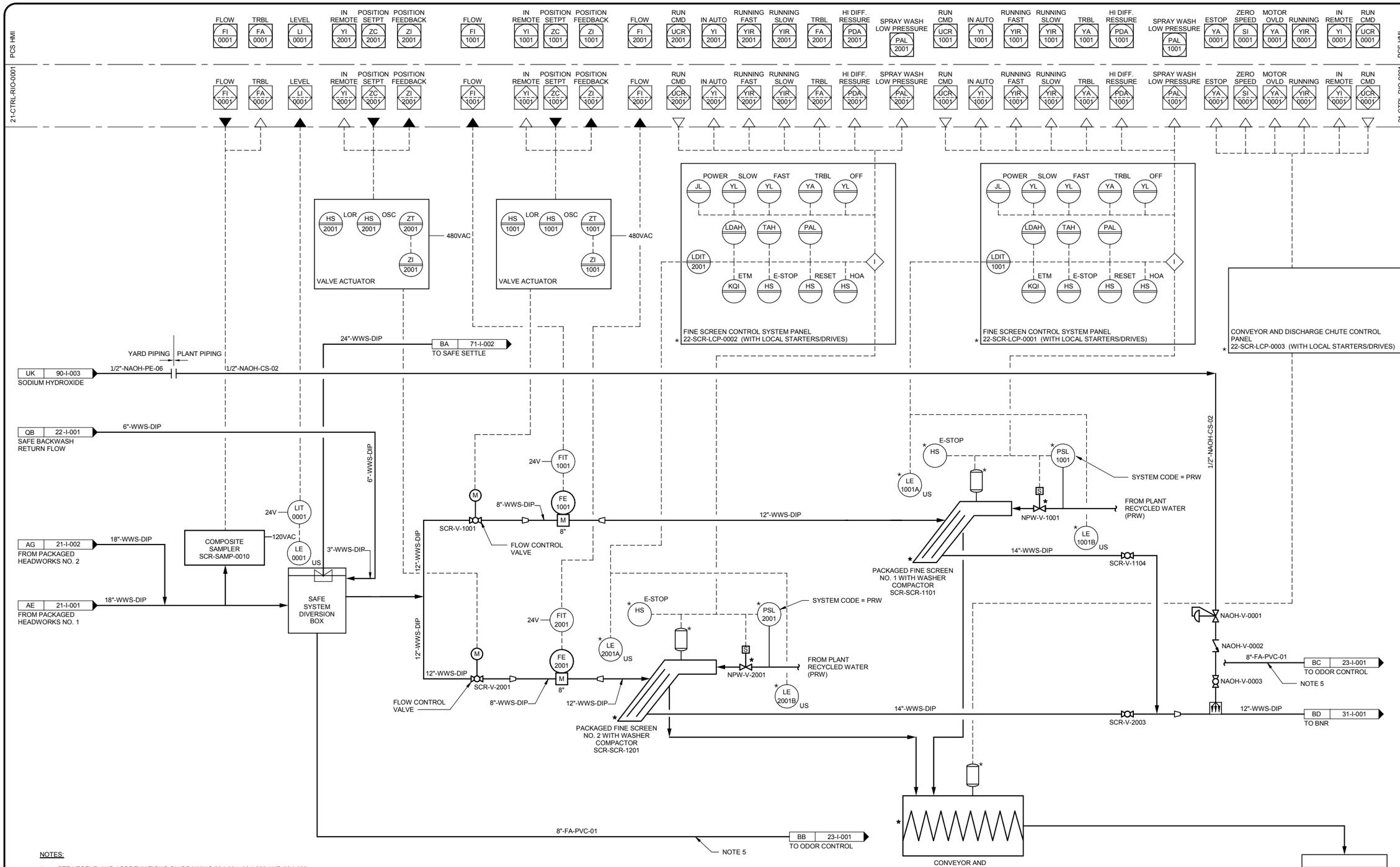


NOTES:

1. SEE LEGEND AND ABBREVIATIONS ON DRAWING 00-I-001, 00-I-002 AND 00-I-003.
2. AREA CODE IS 22 UNLESS OTHERWISE NOTED. SYSTEM CODE IS SCR UNLESS OTHERWISE NOTED.
3. LOCAL CONTROL DEVICES SUCH AS INDICATING LIGHTS AND SWITCHES, LOCATED IN MCC's OR AT DRIVEN EQUIPMENT MAY NOT INDICATED ON THIS P&ID.
4. FOR DRAWING CLARITY, VALVE TAG NUMBER ONLY SHOW THE SEQUENCE NUMBER UNLESS OTHERWISE NOTED.
5. SEE HVAC/ MECHANICAL SPECIFICATION FOR ADDITIONAL DETAILS ON ODOR CONTROL DUCTING.

* ITEM FURNISHED BY PACKAGED FINE SCREENS SUPPLIER.

COASTAL DEVELOPMENT PERMIT PLANS

| NO. | BY | CHK | APP | DATE | REVISIONS AND RECORD OF USE |
|---|---|---|---|---|---|
| B | BLB | TAH | EVB | 7/30/2019 | 60% SUBMITTAL |
| A | BLB | TAH | EVB | 3/5/2019 | 30% SUBMITTAL |

BLACK & VEATCH

JOINT VENTURE

FILANC

BLACK & VEATCH

CITY OF MORRO BAY
MORRO BAY WATER
RECLAMATION FACILITY (WRF)

HEADWORKS AREA - FINE SCREENS
P&ID
SAFE DIVERSION BOX & FINE SCREENS

DESIGNED: BLB,TDE
DETAILED: PVR
CHECKED: TAH
APPROVED:
DATE:

0 1/2 1
IF THIS BAR DOES NOT MEASURE 1" THEN DRAWING IS NOT TO FULL SCALE

PROJECT NO.
400530

22-I-001
SHEET
OF

PLOTTED: 29-07-2019 16:37:08
D400530

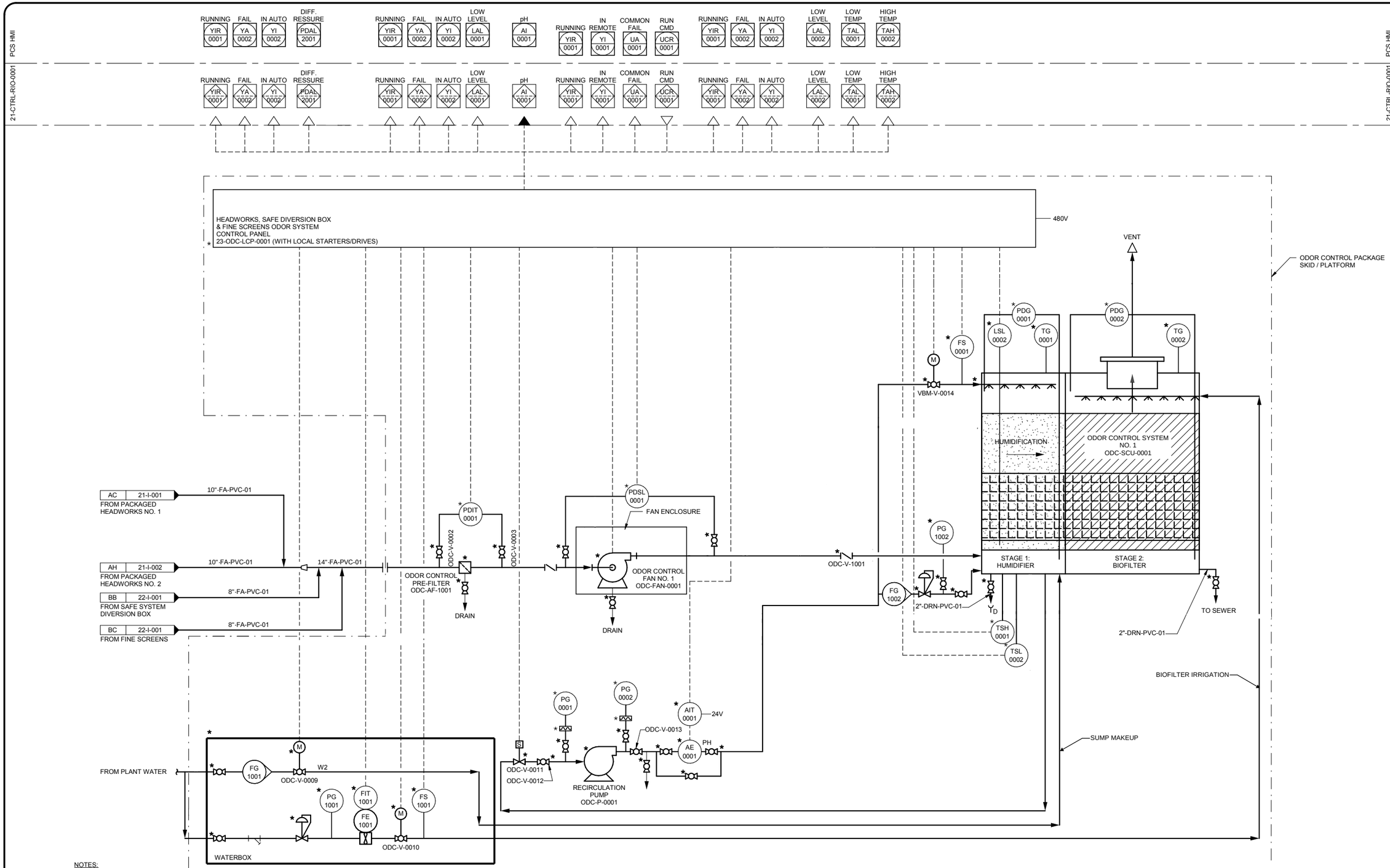


NOTES:

1. SEE LEGEND AND ABBREVIATIONS ON DRAWINGS 00-I-001, 00I-002 AND 00-I-003.
2. AREA CODE IS 23 UNLESS OTHERWISE NOTED. SYSTEM CODE IS ODC UNLESS OTHERWISE NOTED.
3. LOCAL CONTROL DEVICES SUCH AS INDICATING LIGHTS AND SWITCHES, LOCATED ON MCCs OR AT DRIVEN EQUIPMENT, MAY NOT BE SHOWN ON THIS P&ID.

* ITEM FURNISHED BY PACKAGED ODOR CONTROL SYSTEM SUPPLIER.

| NO. | DATE | REVISIONS AND RECORD OF USE | BY | CHK | APP |
|---|---|---|---|---|---|
| B | 7/30/2019 | 60% SUBMITTAL | BLB | TAH | EVB |
| A | 3/5/2019 | 30% SUBMITTAL | BLB | TAH | EVB |

BLACK & VEATCH

JOINT VENTURE

FILANC

BLACK & VEATCH

CITY OF MORRO BAY
MORRO BAY WATER
RECLAMATION FACILITY (WRF)

HEADWORKS AREA - ODOR CONTROL
P&ID
ODOR CONTROL SYSTEM

DESIGNED: BLB, TDE
DETAILED: PVR
CHECKED: TAH
APPROVED:
DATE:

0 1/2 1
IF THIS BAR DOES NOT MEASURE 1" THEN DRAWING IS NOT TO FULL SCALE

PROJECT NO.
400530

23-I-001
SHEET
OF

PLOTTED: 30-07-2019 15:57:55
D400530

COASTAL DEVELOPMENT PERMIT PLANS

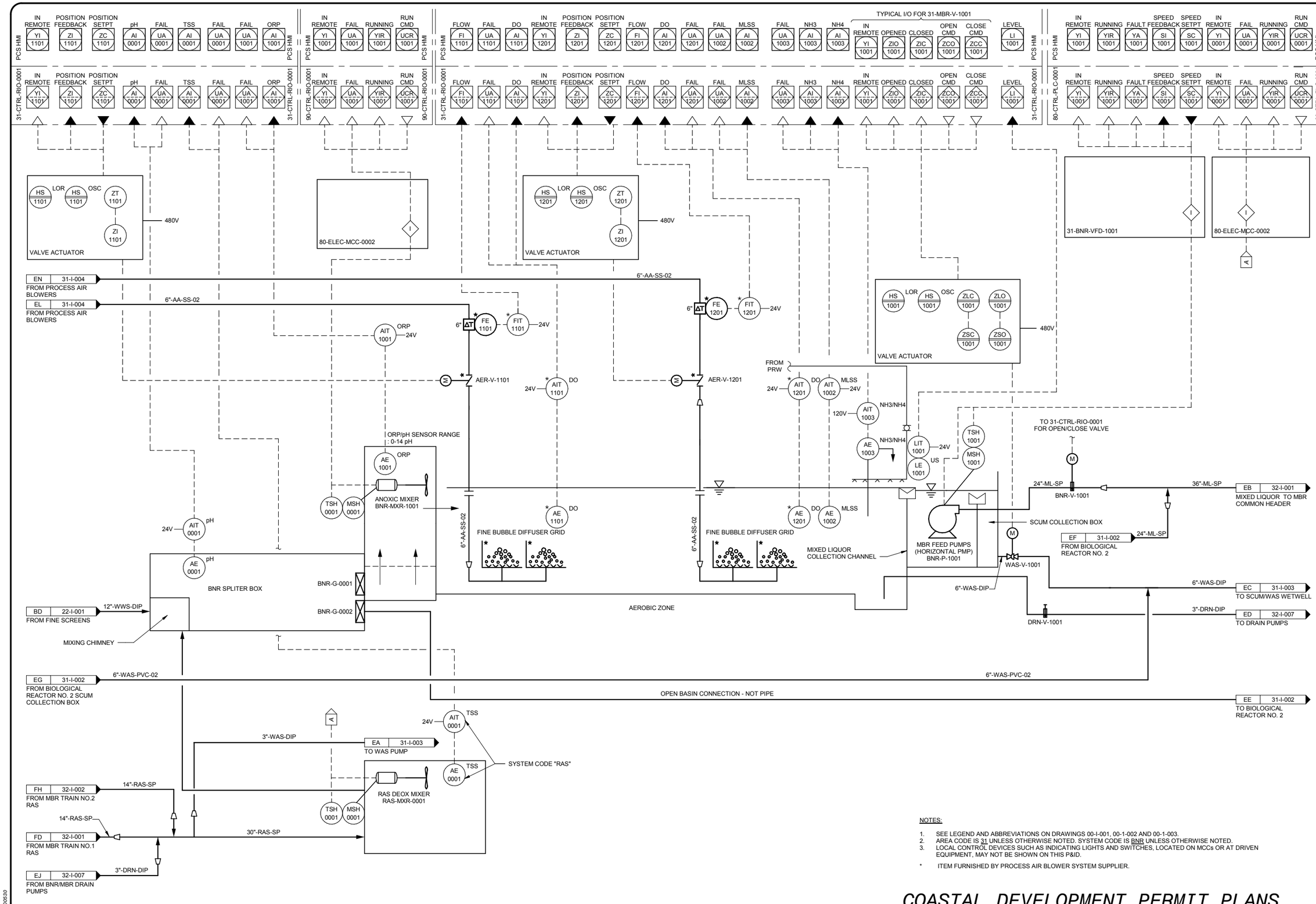


NOTES:

1. SEE LEGEND AND ABBREVIATIONS ON DRAWINGS 00-I-001, 00-1-002 AND 00-1-003.
2. AREA CODE IS 31 UNLESS OTHERWISE NOTED. SYSTEM CODE IS BNR UNLESS OTHERWISE NOTED.
3. LOCAL CONTROL DEVICES SUCH AS INDICATING LIGHTS AND SWITCHES, LOCATED ON MCCs OR AT DRIVEN EQUIPMENT, MAY NOT BE SHOWN ON THIS P&ID.

* ITEM FURNISHED BY PROCESS AIR BLOWER SYSTEM SUPPLIER.

# COASTAL DEVELOPMENT PERMIT PLANS

| NO. | BY | CHK | APP |
|---|---|---|---|
| B | BLB | TAH | EVB |
| A | BLB | TAH | EVB |

REVISIONS AND RECORD OF USE

| DATE | |
|---|---|
| 7/30/2019 | 60% SUBMITTAL |
| 3/5/2019 | 30% SUBMITTAL |

BLACK & VEATCH

JOINT VENTURE

FILANC

BLACK & VEATCH

CITY OF MORRO BAY
MORRO BAY WATER
RECLAMATION FACILITY (WRF)

TREATMENT AREA - BNR BASINS
P&ID
BASIN 1 & RAS DEOX

DESIGNED: BLB, KEZ
DETAILED: PVR
CHECKED: TAH
APPROVED:
DATE:

0 1/2 1
IF THIS BAR DOES NOT MEASURE 1" THEN DRAWING IS NOT TO FULL SCALE

PROJECT NO. 400530

31-I-001
SHEET
OF

PLOTTED: 30-07-2019 14:41:19
D400530

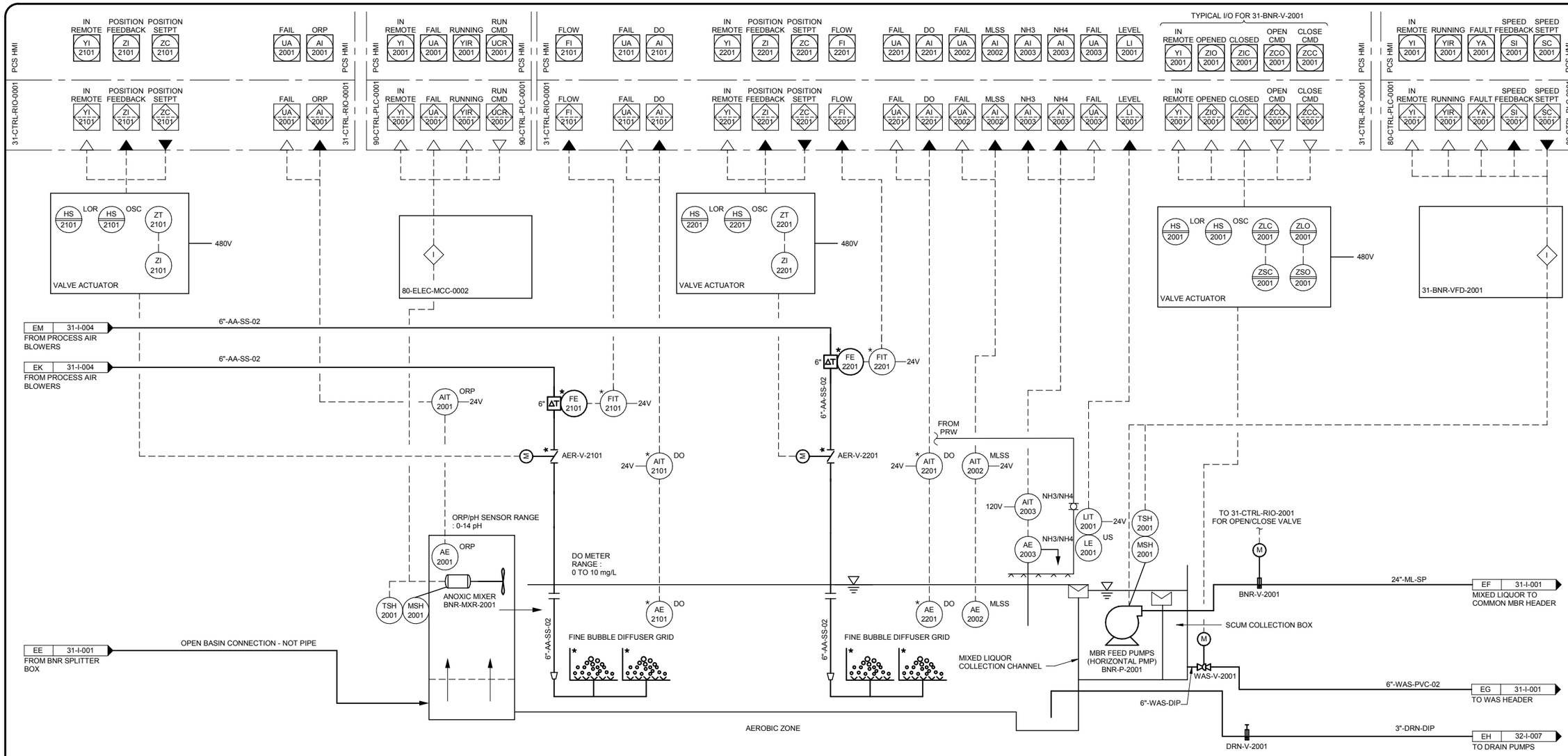


NOTES:

1. SEE LEGEND AND ABBREVIATIONS ON DRAWINGS 00-I-001, 00-1-002 AND 00-1-003.
2. AREA CODE IS 31 UNLESS OTHERWISE NOTED. SYSTEM CODE IS BNR UNLESS OTHERWISE NOTED.
3. LOCAL CONTROL DEVICES SUCH AS INDICATING LIGHTS AND SWITCHES, LOCATED ON MCCs OR AT DRIVEN EQUIPMENT, MAY NOT BE SHOWN ON THIS P&ID.

* ITEM FURNISHED BY PROCESS AIR BLOWER SYSTEM SUPPLIER.

# COASTAL DEVELOPMENT PERMIT PLANS

| NO. | REVISIONS AND RECORD OF USE | DATE | BY | CHK | APP |
|---|---|---|---|---|---|
| B | 60% SUBMITTAL | 7/30/2019 | BLB | TAH | EVB |
| A | 30% SUBMITTAL | 3/5/2019 | BLB | TAH | EVB |

BLACK & VEATCH

JOINT VENTURE

FILANC

BLACK & VEATCH

CITY OF MORRO BAY
MORRO BAY WATER RECLAMATION FACILITY (WRF)

TREATMENT AREA - BNR BASINS
P&ID
BASIN 2

DESIGNED: BLB, KEZ
DETAILED: PVR
CHECKED: TAH
APPROVED:
DATE:

0 1/2 1
IF THIS BAR DOES NOT MEASURE 1" THEN DRAWING IS NOT TO FULL SCALE

PROJECT NO. 400530

31-I-002
SHEET
OF

PLOTTED: 30-07-2019 14:41:19
D400530

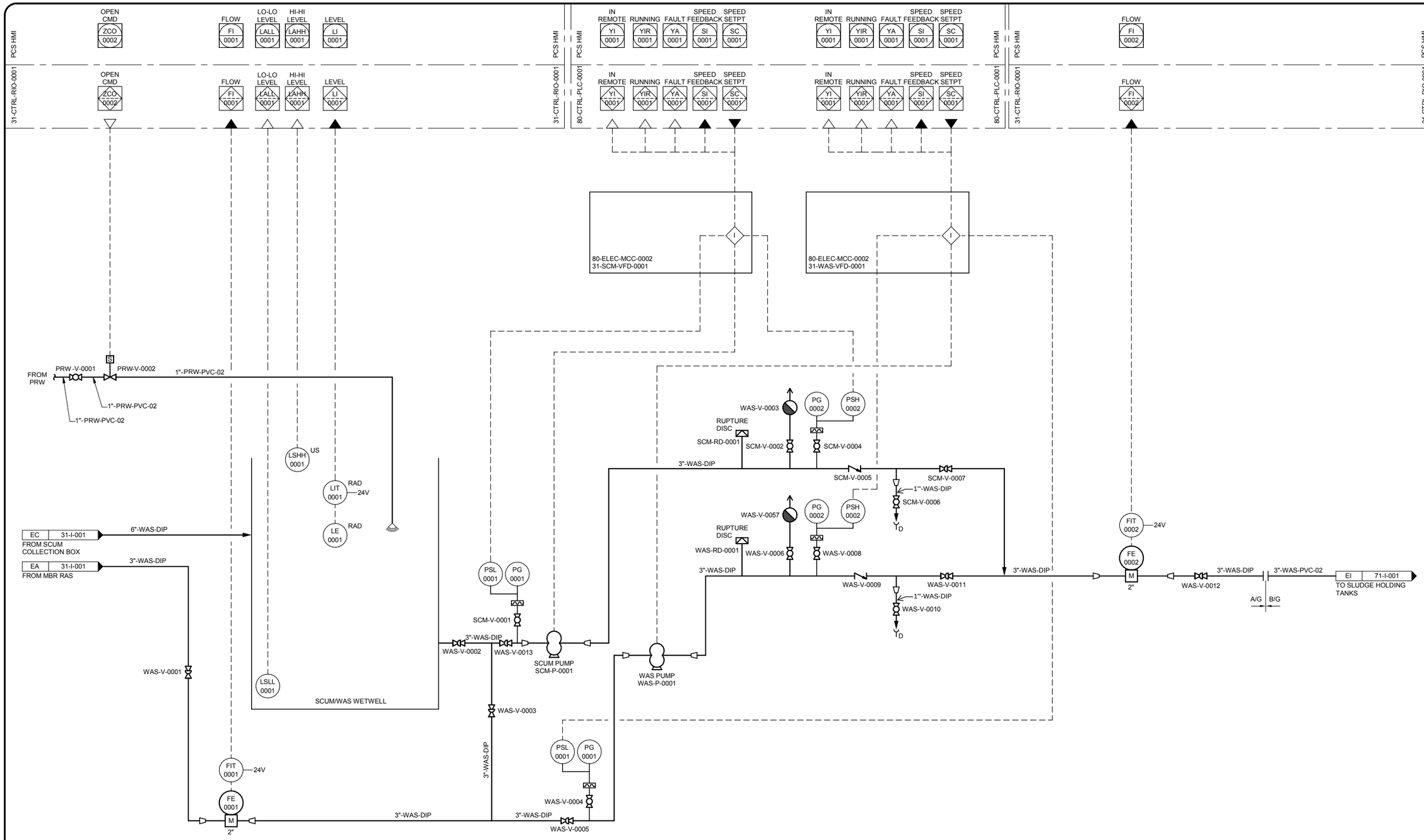


NOTES:

1. SEE LEGEND AND ABBREVIATIONS ON DRAWINGS 00-I-001, 00-1-002 AND 00-1-003.
2. AREA CODE IS 31 UNLESS OTHERWISE NOTED. SYSTEM CODE IS WAS UNLESS OTHERWISE NOTED.
3. LOCAL CONTROL DEVICES SUCH AS INDICATING LIGHTS AND SWITCHES, LOCATED ON MCCs OR AT DRIVEN EQUIPMENT, MAY NOT BE SHOWN ON THIS P&ID.

# COASTAL DEVELOPMENT PERMIT PLANS

| NO. | BY | CHK | APP |
|---|---|---|---|
| B | BLB | TAH | EVB |
| A | BLB | TAH | EVB |

REVISIONS AND RECORD OF USE

| DATE | |
|---|---|
| 7/30/2019 | 60% SUBMITTAL |
| 3/5/2019 | 30% SUBMITTAL |

BLACK & VEATCH

JOINT VENTURE

FILANC

BLACK & VEATCH

CITY OF MORRO BAY
MORRO BAY WATER
RECLAMATION FACILITY (WRF)

TREATMENT AREA - BNR BASINS
P&ID
WAS SYSTEM

DESIGNED: BLB, KEZ
DETAILED: PVR
CHECKED: TAH
APPROVED:
DATE:

0 1/2 1
IF THIS BAR DOES NOT MEASURE 1" THEN DRAWING IS NOT TO FULL SCALE

PROJECT NO. 400530

31-I-003
SHEET
OF

PLOTTED: 30-07-2019 14:41:19
D400530

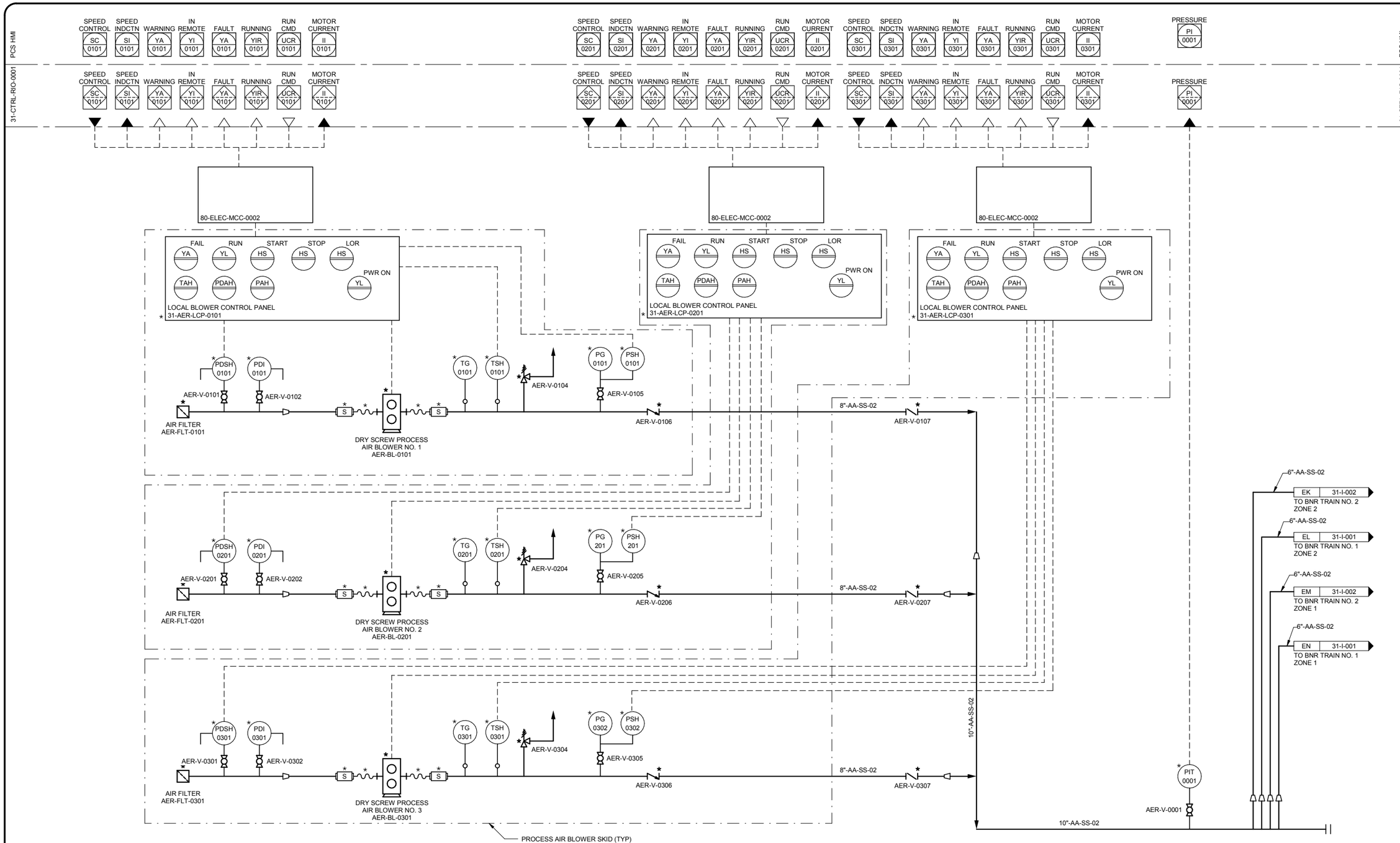


NOTES:

1. SEE LEGEND AND ABBREVIATIONS ON DRAWINGS 00-I-001, 00I-002 AND 00-I-003
2. LOCAL CONTROL DEVICES SUCH AS INDICATING LIGHTS AND SWITCHES, LOCATED ON MCCs OR AT DRIVEN EQUIPMENT, MAY NOT BE SHOWN ON THIS P&ID.
3. AREA CODE IS 31 UNLESS OTHERWISE NOTED. SYSTEM CODE IS AER UNLESS OTHERWISE NOTED.
4. INLET/FILTER/SILENCER, DRIVE, PANEL, BLOWER UNIT, SHALL ALL BE PROVIDED BY THE BLOWER MANUFACTURER, AS DESCRIBED IN SECTION 11370.

* ITEM FURNISHED BY PROCESS AIR BLOWER SYSTEM SUPPLIER.

COASTAL DEVELOPMENT PERMIT PLANS

| NO. | BY | CHK | APP |
|---|---|---|---|
| B | BLB | TAH | EVB |
| A | BLB | TAH | EVB |

| DATE | REVISIONS AND RECORD OF USE |
|---|---|
| 7/30/2019 | 60% SUBMITTAL |
| 3/5/2019 | 30% SUBMITTAL |

BLACK & VEATCH

JOINT VENTURE

FILANC

BLACK & VEATCH

CITY OF MORRO BAY
MORRO BAY WATER RECLAMATION FACILITY (WRF)

TREATMENT AREA - BNR BASINS
P&ID
PROCESS AIR BLOWERS

DESIGNED: BLB, KEZ
DETAILED: PVR
CHECKED: TAH
APPROVED:
DATE:

0 1/2 1
IF THIS BAR DOES NOT MEASURE 1" THEN DRAWING IS NOT TO FULL SCALE

PROJECT NO. 400530

31-I-004

SHEET OF

PLOTTED: 30-07-2019 14:41:20

D400530

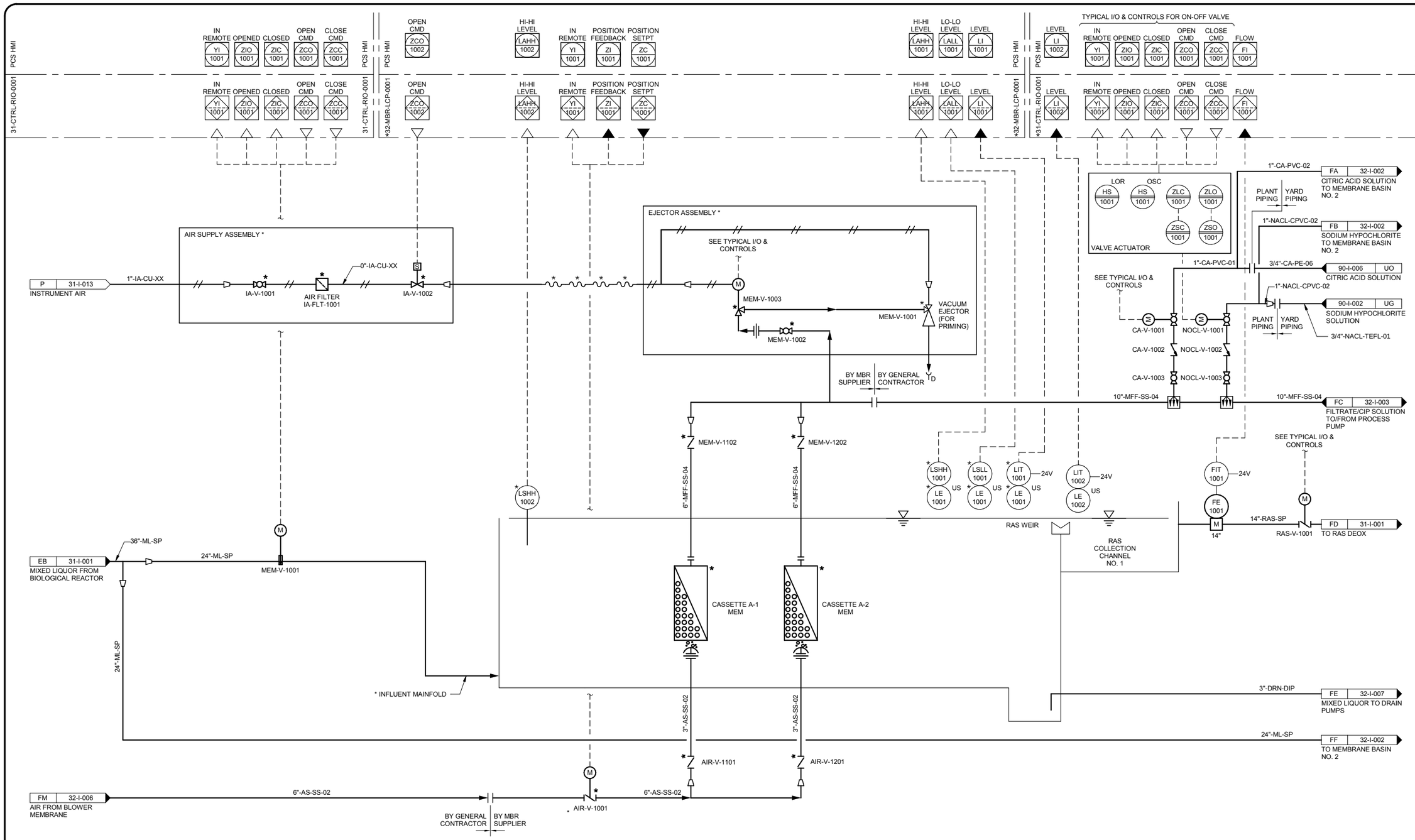


NOTES :
1. SEE LEGEND AND ABBREVIATIONS ON DRAWINGS 00-I-001, 00-I-002 AND 00-I-003.
2. AREA CODE IS 32 UNLESS OTHERWISE NOTED. SYSTEM CODE IS MEM UNLESS OTHERWISE NOTED.
3. LOCAL CONTROL DEVICES SUCH AS INDICATING LIGHTS AND SWITCHES, LOCATED ON MCCs OR AT DRIVEN EQUIPMENT, MAY NOT BE SHOWN ON THIS P&ID.
4. DRAWING TYPICAL FOR EVERY MEMBRANE TRAIN, WITH EXCEPTION OF COMMON PIPES.

* ITEM FURNISHED BY MBR SYSTEM SUPPLIER.

# COASTAL DEVELOPMENT PERMIT PLANS

| NO. | BY | CHK | APP |
|---|---|---|---|
| B | BLB | TAH | EVB |
| A | BLB | TAH | EVB |

REVISIONS AND RECORD OF USE

| DATE | |
|---|---|
| 7/30/2019 | 60% SUBMITTAL |
| 3/5/2019 | 30% SUBMITTAL |

BLACK & VEATCH
JOINT VENTURE
FILANC
BLACK & VEATCH

CITY OF MORRO BAY
MORRO BAY WATER RECLAMATION FACILITY (WRF)

TREATMENT AREA - MBR SYSTEM
P&ID
MEMBRANE BASIN 1

DESIGNED: BLB, KEZ
DETAILED: PVR
CHECKED: TAH
APPROVED:
DATE:

0 1/2 1
IF THIS BAR DOES NOT MEASURE 1" THEN DRAWING IS NOT TO FULL SCALE

PROJECT NO. 400530

32-I-001
SHEET OF

PLOTTED: 30-07-2019 14:41:20
D400530

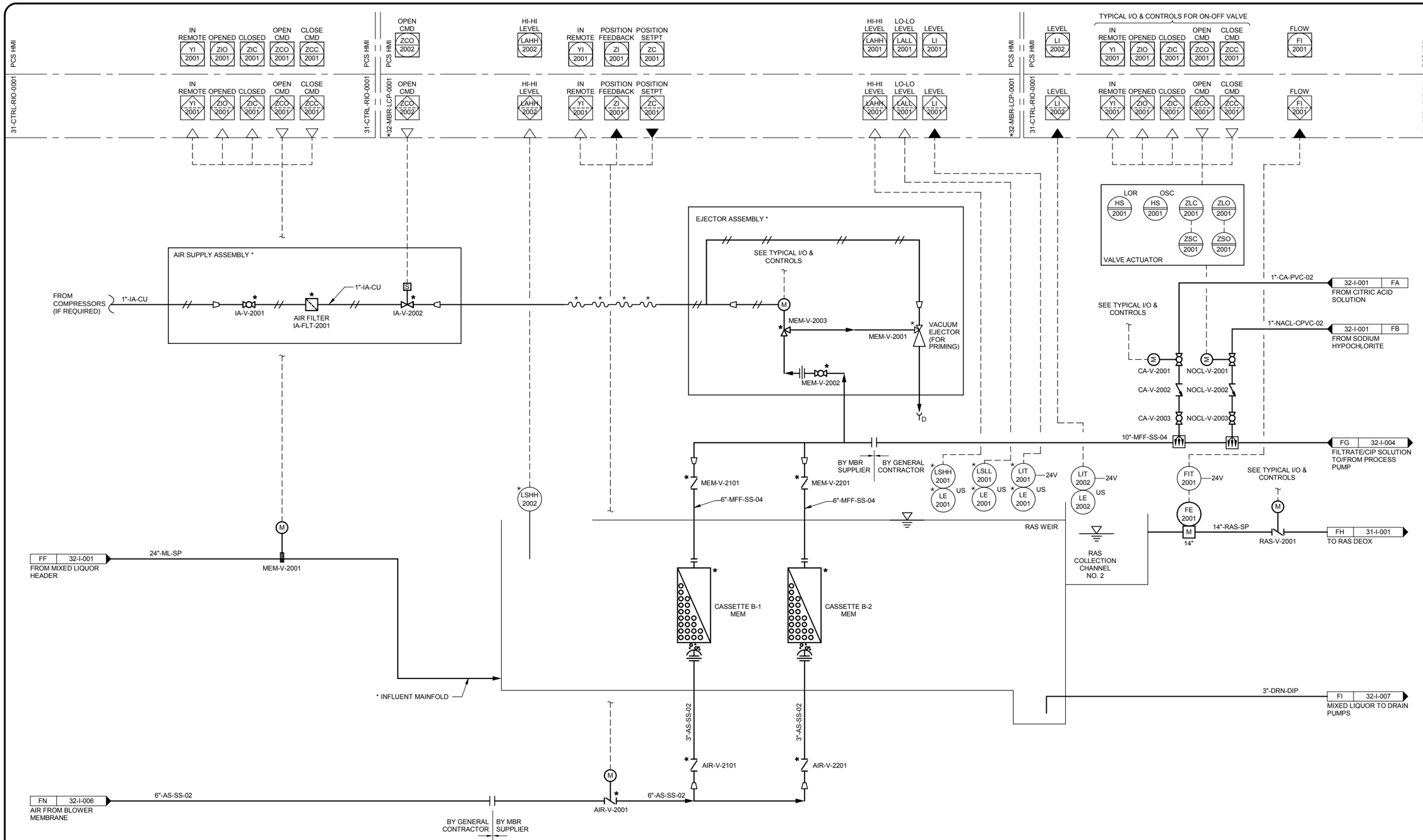


NOTES :
1. SEE LEGEND AND ABBREVIATIONS ON DRAWINGS 00-I-001, 00-I-002 AND 00-I-003.
2. AREA CODE IS 32 UNLESS OTHERWISE NOTED. SYSTEM CODE IS MEM UNLESS OTHERWISE NOTED.
3. LOCAL CONTROL DEVICES SUCH AS INDICATING LIGHTS AND SWITCHES, LOCATED ON MCCs OR AT DRIVEN EQUIPMENT, MAY NOT BE SHOWN ON THIS P&ID.
4. DRAWING TYPICAL FOR EVERY MEMBRANE TRAIN, WITH EXCEPTION OF COMMON PIPES.

* ITEM FURNISHED BY MBR SYSTEM SUPPLIER

# COASTAL DEVELOPMENT PERMIT PLANS

| NO. | BY | CHK | APP |
|---|---|---|---|
| B | BLB | TAH | EVB |
| A | BLB | TAH | EVB |

REVISIONS AND RECORD OF USE

| DATE | |
|---|---|
| 7/30/2019 | 60% SUBMITTAL |
| 3/5/2019 | 30% SUBMITTAL |

BLACK & VEATCH
JOINT VENTURE
FILANC
BLACK & VEATCH

CITY OF MORRO BAY
MORRO BAY WATER
RECLAMATION FACILITY (WRF)

TREATMENT AREA - MBR SYSTEM
P&ID
MEMBRANE BASIN 2

DESIGNED: BLB, KEZ
DETAILED: PVR
CHECKED: TAH
APPROVED:
DATE:

0 1/2 1
IF THIS BAR DOES NOT MEASURE 1" THEN DRAWING IS NOT TO FULL SCALE

PROJECT NO. 400530

32-I-002
SHEET OF

PLOTTED: 30-07-2019 14:41:21
D400530

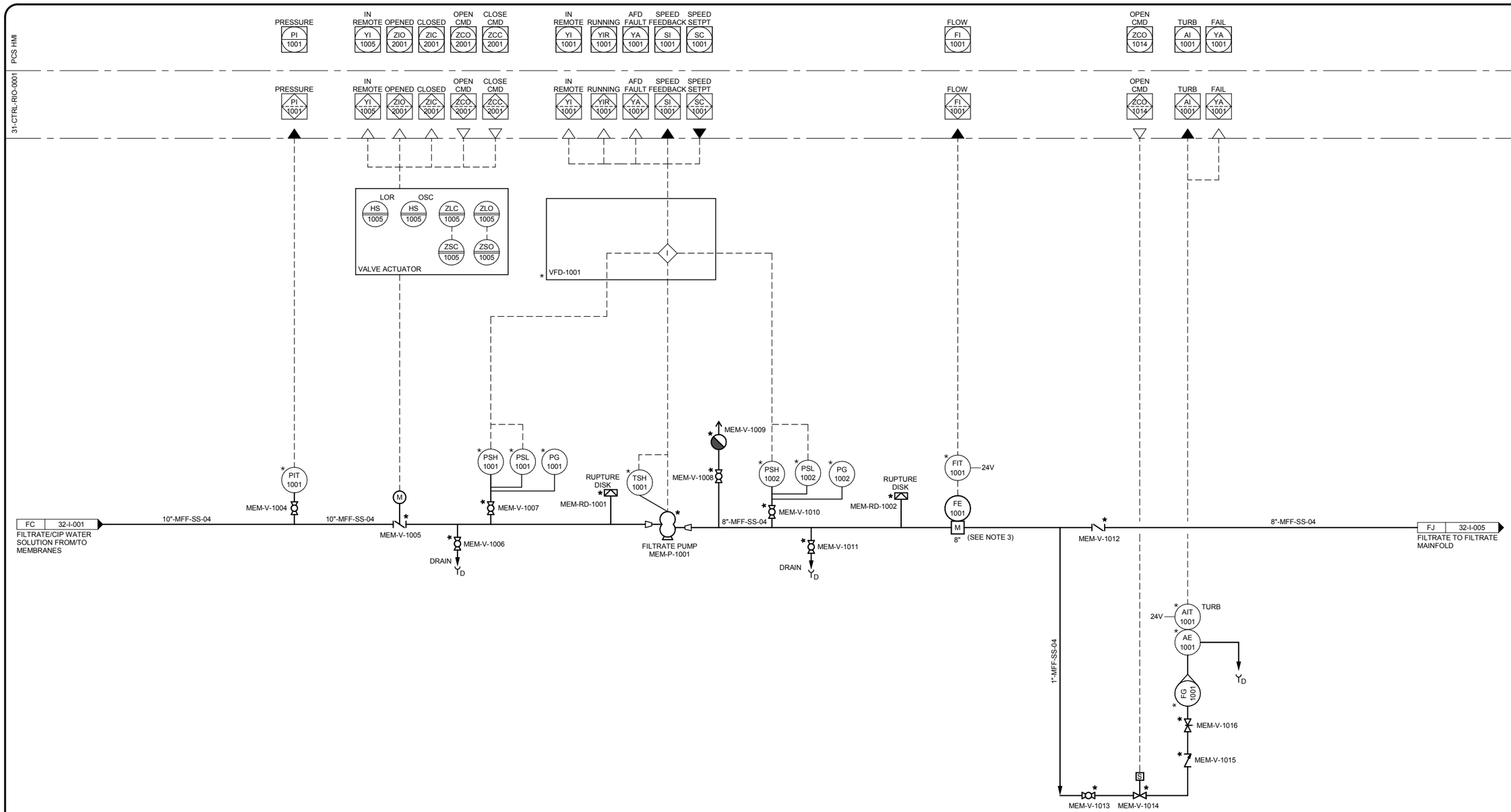


NOTES:

1. SEE LEGEND AND ABBREVIATIONS ON DRAWINGS 00-I-001, 00-I-002 AND 00-I-003.
2. AREA CODE IS 32 UNLESS OTHERWISE NOTED. SYSTEM CODE IS MEM UNLESS OTHERWISE NOTED.
3. LOCAL CONTROL DEVICES SUCH AS INDICATING LIGHTS AND SWITCHES, LOCATED ON MCCs OR AT DRIVEN EQUIPMENT, MAY NOT BE SHOWN ON THIS P&ID.
4. PRIMING SYSTEM CONNECTION AND PRESSURE TRANSMITTER MUST BE LOCATED AT HIGH POINT OF MEMBRANE TANK HEADER.

* ITEM FURNISHED BY MBR SYSTEM SUPPLIER.

COASTAL DEVELOPMENT PERMIT PLANS

| NO. | BY | CHK | APP |
|---|---|---|---|
| B | BLB | TAH | EVB |
| A | BLB | TAH | EVB |

| DATE | REVISIONS AND RECORD OF USE |
|---|---|
| 7/30/2019 | 60% SUBMITTAL |
| 3/5/2019 | 30% SUBMITTAL |

BLACK & VEATCH
JOINT VENTURE
FILANC
BLACK & VEATCH

CITY OF MORRO BAY
MORRO BAY WATER
RECLAMATION FACILITY (WRF)

TREATMENT AREA - MBR SYSTEM
P&ID
FILTRATE PUMP, BASIN 1

DESIGNED: BLB, KEZ
DETAILED: PVR
CHECKED: TAH
APPROVED:
DATE:

0 1/2 1
IF THIS BAR DOES NOT MEASURE 1" THEN DRAWING IS NOT TO FULL SCALE

PROJECT NO.
400530

32-I-003
SHEET
OF

PLOTTED: 30-07-2019 14:41:21
D400530

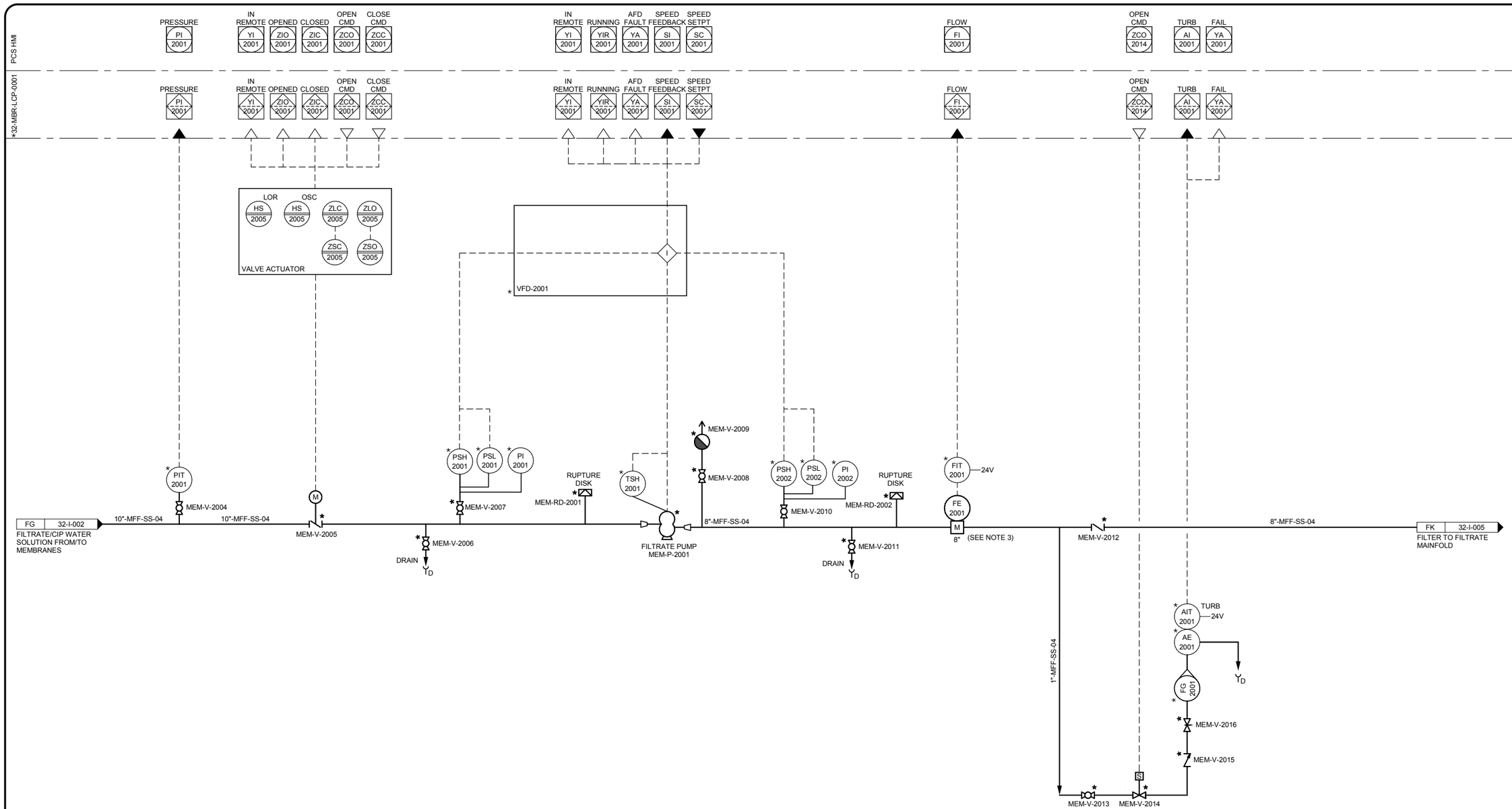


NOTES:

1. SEE LEGEND AND ABBREVIATIONS ON DRAWINGS 00-I-001, 00-I-002 AND 00-I-003.
2. AREA CODE IS 32 UNLESS OTHERWISE NOTED. SYSTEM CODE IS MEM UNLESS OTHERWISE NOTED.
3. LOCAL CONTROL DEVICES SUCH AS INDICATING LIGHTS AND SWITCHES, LOCATED ON MCCs OR AT DRIVEN EQUIPMENT, MAY NOT BE SHOWN ON THIS P&ID.
4. PRIMING SYSTEM CONNECTION AND PRESSURE TRANSMITTER MUST BE LOCATED AT HIGH POINT OF MEMBRANE TANK HEADER.

* ITEM FURNISHED BY MBR SYSTEM SUPPLIER.

# COASTAL DEVELOPMENT PERMIT PLANS

| NO. | BY | CHK | APP |
|---|---|---|---|
| B | BLB | TAH | EVB |
| A | BLB | TAH | EVB |

REVISIONS AND RECORD OF USE

| DATE | |
|---|---|
| 7/30/2019 | 60% SUBMITTAL |
| 3/5/2019 | 30% SUBMITTAL |

BLACK & VEATCH
JOINT VENTURE
FILANC
BLACK & VEATCH

CITY OF MORRO BAY
MORRO BAY WATER
RECLAMATION FACILITY (WRF)

TREATMENT AREA - MBR SYSTEM
P&ID
FILTRATE PUMP, BASIN 2

DESIGNED: BLB, KEZ
DETAILED: PVR
CHECKED: TAH
APPROVED:
DATE:

0 1/2 1
IF THIS BAR DOES NOT MEASURE 1" THEN DRAWING IS NOT TO FULL SCALE

PROJECT NO. 400530

32-I-004
SHEET OF

PLOTTED: 30-07-2019 14:41:22
D400530

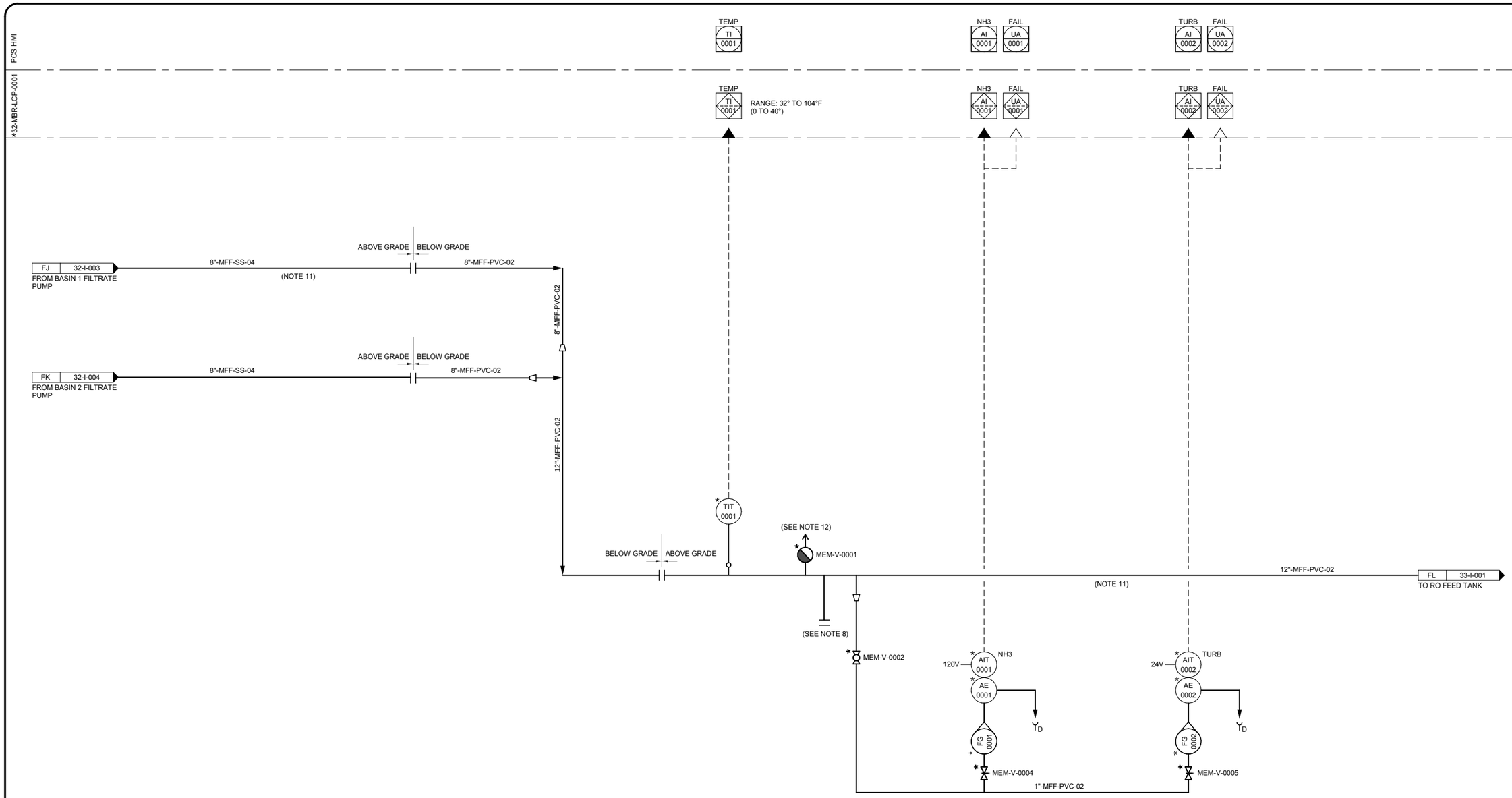


NOTES:

1. SEE LEGEND AND ABBREVIATIONS ON DRAWINGS 00-I-001, 00-I-002 AND 00-I-003.
2. AREA CODE IS 32 UNLESS OTHERWISE NOTED. SYSTEM CODE IS MEM UNLESS OTHERWISE NOTED.
3. LOCAL CONTROL DEVICES SUCH AS INDICATING LIGHTS AND SWITCHES, LOCATED ON MCC's OR AT DRIVEN EQUIPMENT, MAY NOT BE SHOWN ON THIS P&ID.
4. ALL DOTTED-LINES/EQUIPMENT TO BE SUPPLIED BY OTHERS. ----- VERIFICATION OF ANY POSTED VALUES IS THE RESPONSIBILITY OF THE SYSTEM INTEGRATOR.
5. FLOOR DRAINS TO BE PROVIDED AND PIPED INTO BY GENERAL CONTRACTOR, AS REQUIRED.
6. ALL EQUIPMENT ON THIS SHEET IS DESIGNED TO BE INSTALLED IN A NON-CLASSIFIED AREA (PER NFPA 820)
7. PLANT START-UP WATER TO BE ADDED TO TANK THROUGH MANWAY WITH HOSE.
8. CAPPED CONNECTION FOR RECIRCULATION BACK TO THE BIOREACTOR DURING START-UP. TEMPORARY PIPING IS PROVIDED BY OTHERS.
9. VALVE REQUIRED IF PERMEATE DISCHARGE POINT IS BELOW BACKPULSE TANK.
10. FINAL SIZING AND DESIGN TO BE VERIFIED DURING DETAIL PROJECT ENGINEERING.
11. SCH80 PVC IS ACCEPTABLE.
12. COMBINATION VACUUM BREAK/AIR RELEASE, AS REQUIRED.

* ITEM FURNISHED BY MBR SYSTEM SUPPLIER.

COASTAL DEVELOPMENT PERMIT PLANS

| NO. | DATE | REVISIONS AND RECORD OF USE | BY | CHK | APP |
|---|---|---|---|---|---|
| B | 7/30/2019 | 60% SUBMITTAL | BLB | TAH | EVB |
| A | 3/5/2019 | 30% SUBMITTAL | BLB | TAH | EVB |

BLACK & VEATCH

JOINT VENTURE

FILANC

BLACK & VEATCH

CITY OF MORRO BAY
MORRO BAY WATER
RECLAMATION FACILITY (WRF)

TREATMENT AREA - MBR SYSTEM
P&ID
FILTRATE MANIFOLD

DESIGNED: BLB, KEZ
DETAILED: PVR
CHECKED: TAH
APPROVED:
DATE:

0 1/2 1
IF THIS BAR DOES NOT MEASURE 1" THEN DRAWING IS NOT TO FULL SCALE

PROJECT NO. 400530

32-I-005
SHEET
OF

PLOTTED: 30-07-2019 14:41:22
D400530

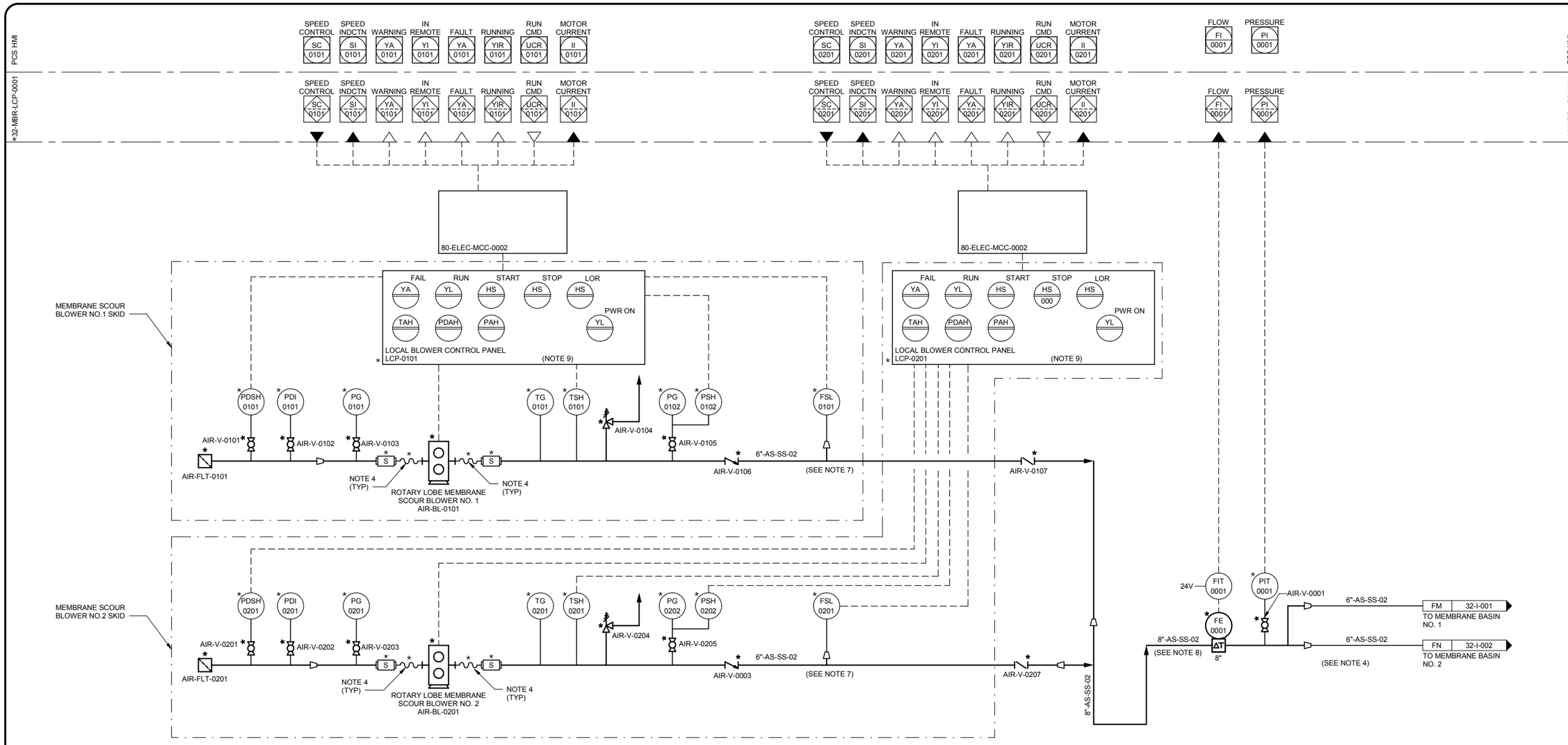


NOTES:

1. SEE LEGEND AND ABBREVIATIONS ON DRAWING 00-I-001, 00-I-002 AND 00-I-003.
2. AREA CODE IS 32 UNLESS OTHERWISE NOTED. SYSTEM CODE IS AIR UNLESS OTHERWISE NOTED.
3. LOCAL CONTROL DEVICES SUCH AS INDICATING LIGHTS AND SWITCHES, LOCATED IN MCC's OR AT DRIVEN EQUIPMENT MAY NOT INDICATED ON THIS P&ID.
4. SYSTEM INTEGRATOR IS RESPONSIBLE FOR HOT AIR PIPE THERMO-INSULATION AS APPLICABLE.
5. BLOWER FLEXIBLE CONNECTION.
6. ALL EQUIPMENT ON THIS SHEET DESIGNED TO BE INSTALLED IN A NON-CLASSIFIED AREA (PER NFPA 820)
7. A PORTION OF THE AIR LINE NEEDS TO BE HIGHER THAN THE TANK OPERATING LEVEL TO PREVENT WATER BACK FLOW.
8. FINAL SIZING AND DESIGN TO BE VERIFIED DURING PROJECT ENGINEERING.
9. MBR SYSTEM SUPPLIER MAY PROVIDE ONE BLOWER CONTROL PANEL FOR ALL BLOWERS.

* ITEM FURNISHED BY MBR SYSTEM SUPPLIER.

COASTAL DEVELOPMENT PERMIT PLANS

| NO. | BY | CHK | APP |
|---|---|---|---|
| B | BLB | TAH | EVB |
| A | BLB | TAH | EVB |

| DATE | REVISIONS AND RECORD OF USE |
|---|---|
| 7/30/2019 | 60% SUBMITTAL |
| 3/5/2019 | 30% SUBMITTAL |

BLACK & VEATCH

JOINT VENTURE

FILANC

BLACK & VEATCH

CITY OF MORRO BAY
MORRO BAY WATER
RECLAMATION FACILITY (WRF)

TREATMENT AREA - MBR SYSTEM
P&ID
MBR SCOUR AIR BLOWERS

DESIGNED: BLB, KEZ
DETAILED: PVR
CHECKED: TAH
APPROVED:
DATE:

0 1/2 1
IF THIS BAR DOES NOT MEASURE 1" THEN DRAWING IS NOT TO FULL SCALE

PROJECT NO. 400530

32-I-006
SHEET
OF

PLOTTED: 30-07-2019 14:41:22
D400530

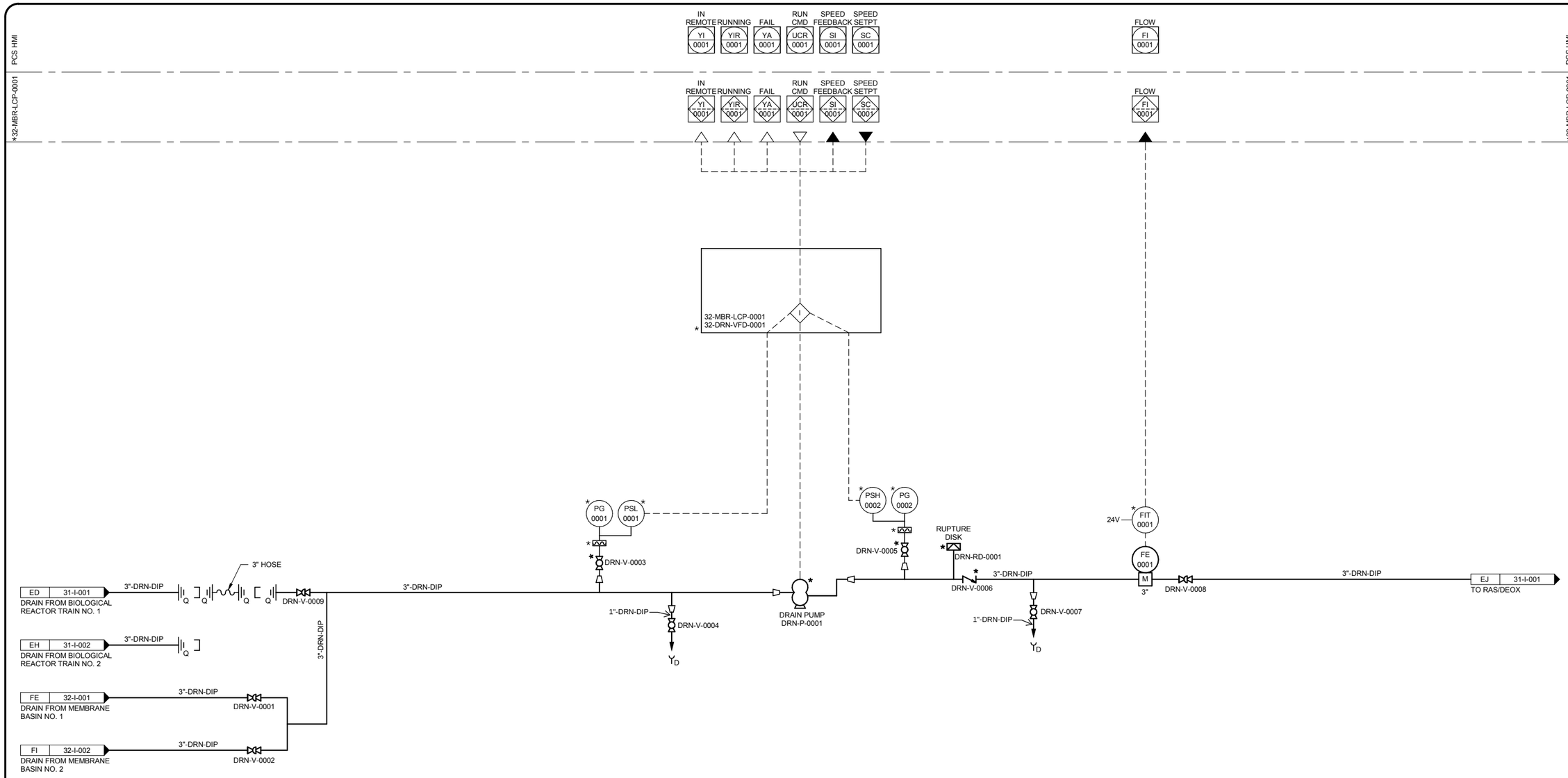


NOTES:

1. SEE LEGEND AND ABBREVIATIONS ON DRAWING 00-I-001, 00-I-002 AND 00-I-003.
2. AREA CODE IS 31 UNLESS OTHERWISE NOTED. SYSTEM CODE IS DRN UNLESS OTHERWISE NOTED.
3. LOCAL CONTROL DEVICES SUCH AS INDICATING LIGHTS AND SWITCHES, LOCATED ON MCC's OR AT DRIVEN EQUIPMENT, MAY NOT BE SHOWN ON THIS P&ID.
4. FLOOR DRAINS TO BE PROVIDED AND PIPED INTO BY GENERAL CONTRACTOR, AS REQUIRED.
5. BUTTERFLY VALVES ARE USED ON WASTE WATER AND MIXED LIQUOR SERVICES
6. DESIGN ENGINEER TO BE INSURE THERE ENOUGH BACK PRESSURE IN THIS LINE IN TO ALLOW FOR WAS REMOVAL REFER TO NEXT NOTE FOR MORE DETAILS.
7. OPTIONAL VALVE CAN BE ACTUATED TO BE ABLE TO AUTOMATICALLY THROTTLE THE LINE IN ORDER TO CREATE BACK PRESSURE FOR SLUDGE WASTING - REFER TO PREVIOUS NOTE.
8. 5 PIPES DIAMETERS UPSTREAM, 3 PIPE DIAMETERS DOWN STREAM, STRAIGHT PIE RUN RECOMMENDED FOR MAXIMUM ACCURACY. PIPE MUST BE ARRANGED SO MAG IS ALWAYS FLOODED.
9. ALL EQUIPMENT ON THIS SHEET IS DESIGNED TO BE INSTALLED IN A NON-CLASSIFIED AREA (PER NFPA 820).

* ITEM FURNISHED BY MBR SYSTEM SUPPLIER.

# COASTAL DEVELOPMENT PERMIT PLANS

| DATE | REVISIONS AND RECORD OF USE | NO. | BY | CHK | APP |
|---|---|---|---|---|---|
| 7/30/2019 | 60% SUBMITTAL | B | BLB | TAH | EVB |
| 3/5/2019 | 30% SUBMITTAL | A | BLB | TAH | EVB |

BLACK & VEATCH

JOINT VENTURE

FILANC

BLACK & VEATCH

CITY OF MORRO BAY
MORRO BAY WATER
RECLAMATION FACILITY (WRF)

TREATMENT AREA - MBR SYSTEM
P&ID
TANK DRAIN PUMP

DESIGNED: BLB, KEZ
DETAILED: PVR
CHECKED: TAH
APPROVED:
DATE:

0 1/2 1
IF THIS BAR DOES NOT MEASURE 1" THEN DRAWING IS NOT TO FULL SCALE

PROJECT NO. 400530

32-I-007
SHEET
OF

PLOTTED: 30-07-2019 14:41:22
D400530

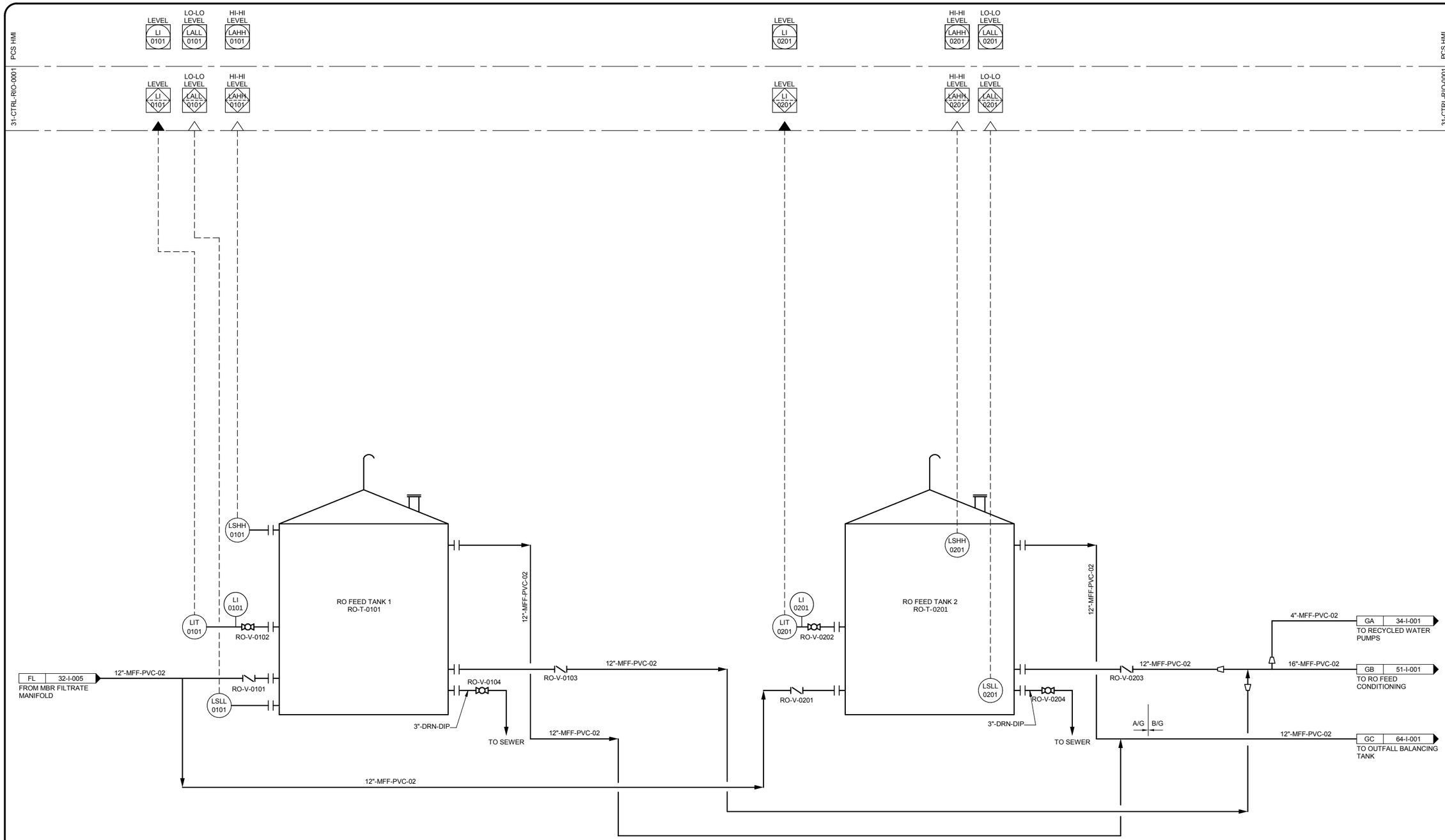


NOTES:

1. SEE LEGEND AND ABBREVIATIONS ON DRAWINGS 00-I-001, 00-1-002 AND 00-1-003.
2. AREA CODE IS 33 UNLESS OTHERWISE NOTED. SYSTEM CODE IS RO UNLESS OTHERWISE NOTED.
3. LOCAL CONTROL DEVICES SUCH AS INDICATING LIGHTS AND SWITCHES, LOCATED ON MCCs OR AT DRIVEN EQUIPMENT, MAY NOT BE SHOWN ON THIS P&ID.

# COASTAL DEVELOPMENT PERMIT PLANS

| NO. | BY | CHK | APP |
|---|---|---|---|
| B | BLB | TAH | EVB |
| A | BLB | TAH | EVB |

| DATE | REVISIONS AND RECORD OF USE |
|---|---|
| 7/30/2019 | 60% SUBMITTAL |
| 3/5/2019 | 30% SUBMITTAL |

BLACK & VEATCH

JOINT VENTURE

FILANC

BLACK & VEATCH

CITY OF MORRO BAY
MORRO BAY WATER
RECLAMATION FACILITY (WRF)

TREATMENT AREA - RO FEED TANKS
P&ID
RO FEED TANKS

DESIGNED: BLB, KEZ
DETAILED: PVR
CHECKED: TAH
APPROVED:
DATE:

0 1/2 1
IF THIS BAR DOES NOT MEASURE 1" THEN DRAWING IS NOT TO FULL SCALE

PROJECT NO. 400530

33-I-001

SHEET OF

PLOTTED: 30-07-2019 14:41:23

D400530

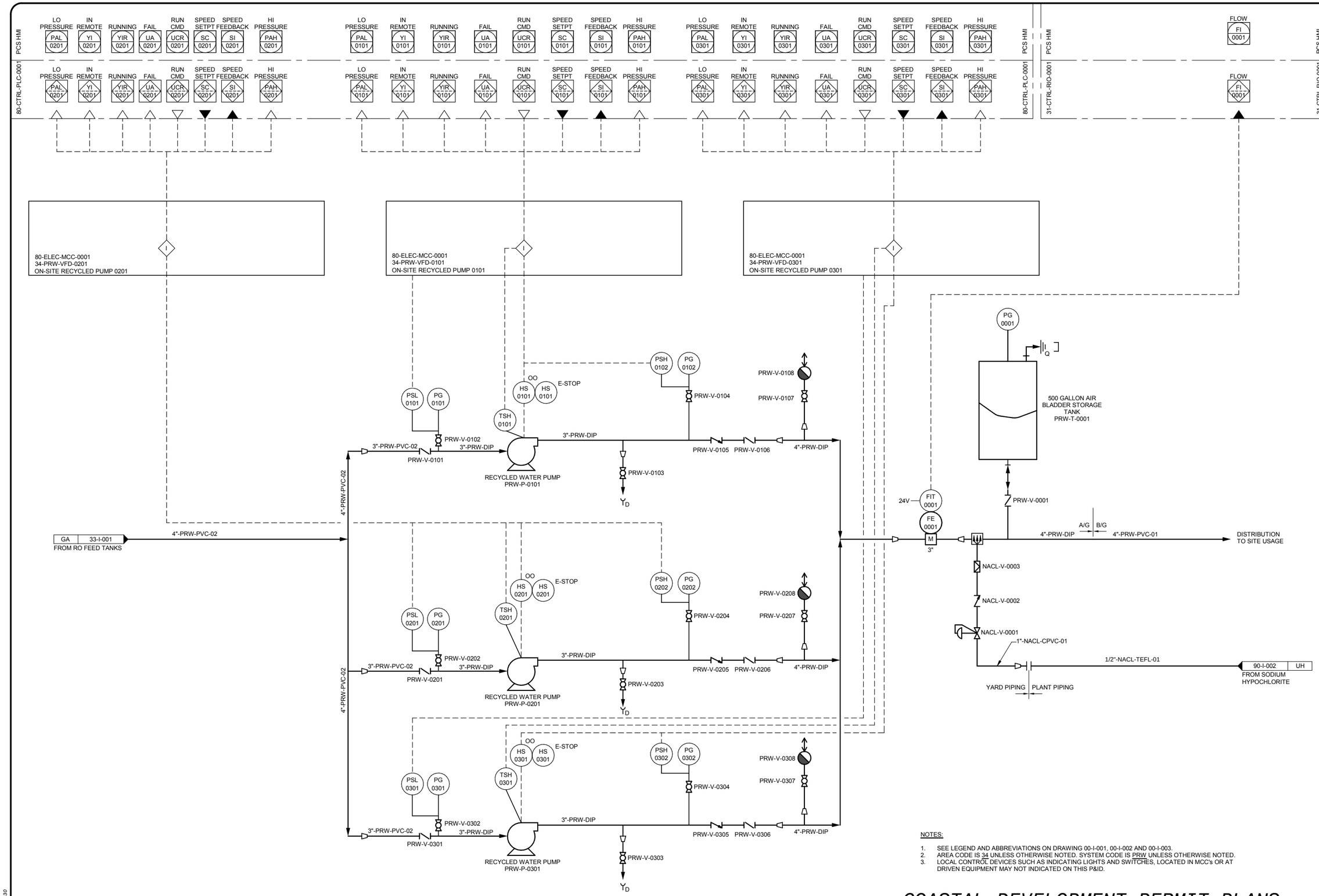


NOTES:

1. SEE LEGEND AND ABBREVIATIONS ON DRAWING 00-I-001, 00-I-002 AND 00-I-003.
2. AREA CODE IS 34 UNLESS OTHERWISE NOTED. SYSTEM CODE IS PRW UNLESS OTHERWISE NOTED.
3. LOCAL CONTROL DEVICES SUCH AS INDICATING LIGHTS AND SWITCHES, LOCATED IN MCC's OR AT DRIVEN EQUIPMENT MAY NOT INDICATED ON THIS P&ID.

# COASTAL DEVELOPMENT PERMIT PLANS

| NO. | BY | CHK | APP |
|---|---|---|---|
| B | BLB | TAH | EVB |
| A | BLB | TAH | EVB |

REVISIONS AND RECORD OF USE

| DATE | |
|---|---|
| 7/30/2019 | 60% SUBMITTAL |
| 3/5/2019 | 30% SUBMITTAL |

BLACK & VEATCH

JOINT VENTURE

FILANC

BLACK & VEATCH

CITY OF MORRO BAY
MORRO BAY WATER
RECLAMATION FACILITY (WRF)

TREATMENT AREA - RECYCLED WATER PUMP STATION
P&ID
RECYCLED WATER PUMPS

DESIGNED: BLB, KEZ
DETAILED: PVR
CHECKED: TAH
APPROVED:
DATE:

0 1/2 1
IF THIS BAR DOES NOT MEASURE 1" THEN DRAWING IS NOT TO FULL SCALE

PROJECT NO. 400530

34-I-001

SHEET OF

PLOTTED: 30-07-2019 14:41:23

D400530

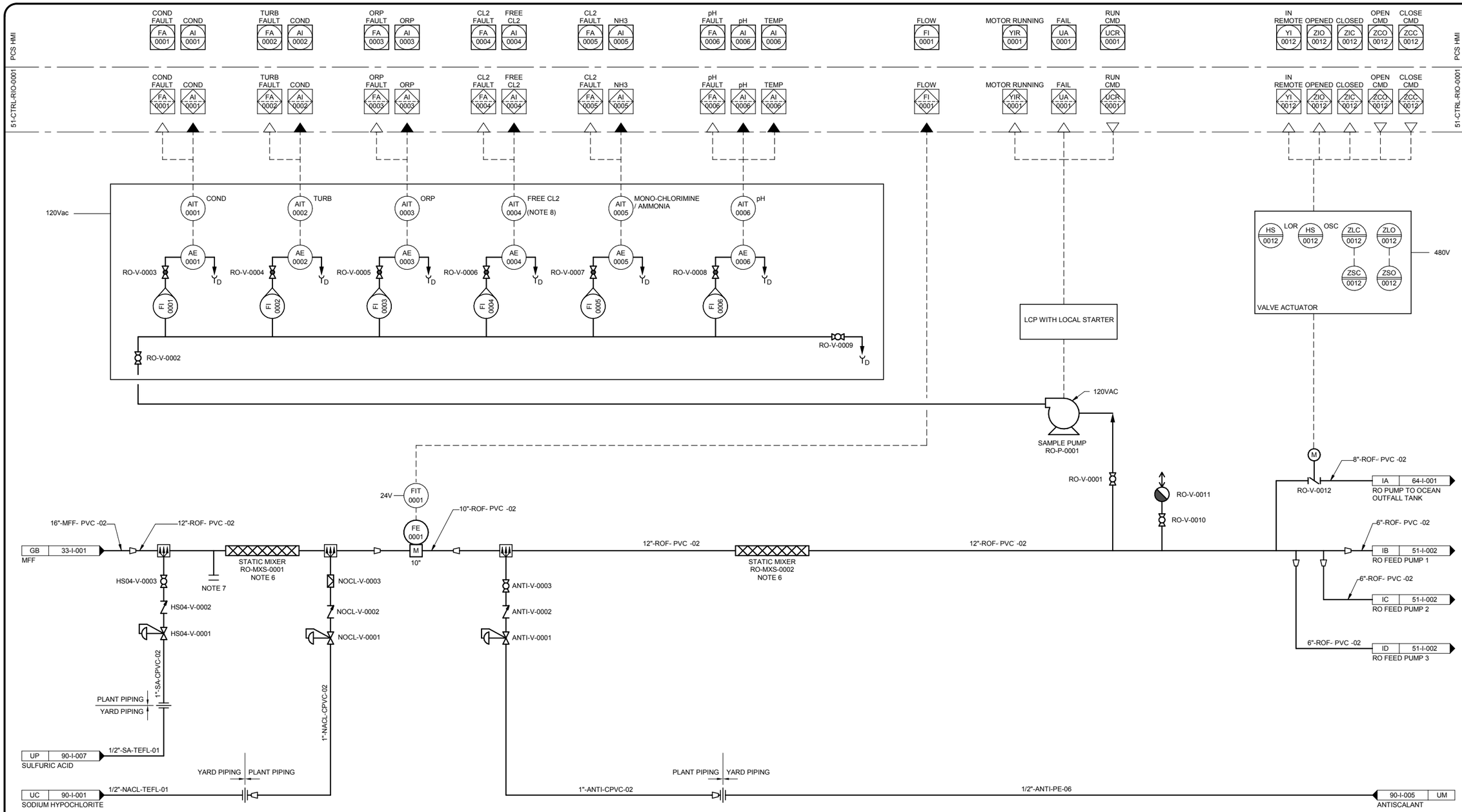


NOTES:

1. SEE LEGEND AND ABBREVIATIONS ON DRAWINGS 00-I-001, 00-1-002 AND 00-1-003
2. AREA CODE IS 51 UNLESS OTHERWISE NOTED. SYSTEM CODE IS RO UNLESS OTHERWISE NOTED.
3. LOCAL CONTROL DEVICES SUCH AS INDICATING LIGHTS AND SWITCHES, LOCATED ON MCCs OR AT DRIVEN EQUIPMENT, MAY NOT BE SHOWN ON THIS P&ID.
4. ALL INSTRUMENT TAGS SHALL HAVE "51" AS PREFIX UNLESS OTHERWISE NOTED AND EXCEPT DCU NUMBER. FOR EXAMPLE, FIT-XXXX SHALL READ 51-FIT-XXXX.
5. ALL INSTRUMENTS SHOWN AS PANEL MOUNTED ON THIS DRAWINGS ARE LOCATED ON THE RO FEEDWATER INSTRUMENT PANEL MOUNTED ON THIS DRAWING ARE LOCATED ON THE RO FEEDWATER INSTRUMENT PANEL, SHOWN ON DWG. XX-I-XXXX.
6. STATIC MIXER SHOWN, HOWEVER, THIS DOSING POINT MAY BE RELOCATED FAR ENOUGH UPSTREAM TO ENSURE PROPER MIXING IF HYDRAULIC CONDITIONS REQUIRE. TO BE FINALIZED DURING DETAILED DESIGN.
7. CONNECTION FOR FUTURE LIQUID AMMONIA SULFATE CHEMICAL ADDITION.
8. INSTRUMENT TO BE TITRATING TYPE NOT PROBE TYPE.

| NO. | BY | CHK | APP |
|---|---|---|---|
| B | BLB | TAH | EVB |
| A | BLB | TAH | EVB |

| DATE | REVISIONS AND RECORD OF USE |
|---|---|
| 7/30/2019 | 60% SUBMITTAL |
| 3/5/2019 | 30% SUBMITTAL |

BLACK & VEATCH

JOINT VENTURE

FILANC

BLACK & VEATCH

CITY OF MORRO BAY
MORRO BAY WATER
RECLAMATION FACILITY (WRF)

RO/UV BUILDING - RO SYSTEM
P&ID
RO FEED CONDITIONING SYSTEM

DESIGNED: BLB, KEZ
DETAILED: PVR
CHECKED: TAH
APPROVED:
DATE:

0 1/2 1
IF THIS BAR DOES NOT MEASURE 1" THEN DRAWING IS NOT TO FULL SCALE

PROJECT NO.
400530

51-I-001
SHEET
OF XXX

COASTAL DEVELOPMENT PERMIT PLANS

PLOTTED: 30-07-2019 14:58:32
D400530

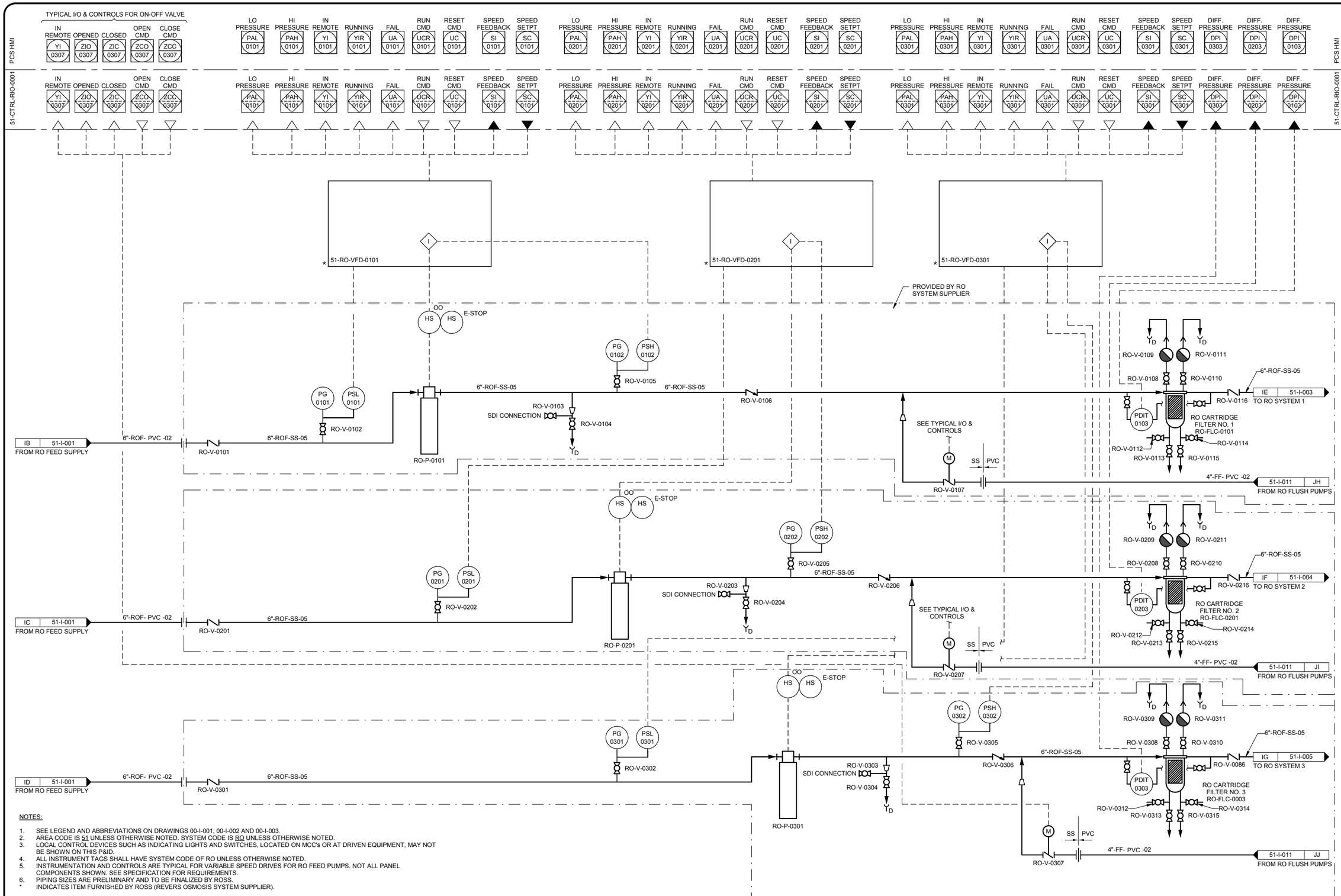


NOTES:

1. SEE LEGEND AND ABBREVIATIONS ON DRAWINGS 00-I-001, 00-I-002 AND 00-I-003.
2. AREA CODE IS 51 UNLESS OTHERWISE NOTED. SYSTEM CODE IS RO UNLESS OTHERWISE NOTED.
3. LOCAL CONTROL DEVICES SUCH AS INDICATING LIGHTS AND SWITCHES, LOCATED ON MCC's OR AT DRIVEN EQUIPMENT, MAY NOT BE SHOWN ON THIS P&ID.
4. ALL INSTRUMENT TAGS SHALL HAVE SYSTEM CODE OF RO UNLESS OTHERWISE NOTED.
5. INSTRUMENTATION AND CONTROLS ARE TYPICAL FOR VARIABLE SPEED DRIVES FOR RO FEED PUMPS. NOT ALL PANEL COMPONENTS SHOWN. SEE SPECIFICATION FOR REQUIREMENTS.
6. PIPING SIZES ARE PRELIMINARY AND TO BE FINALIZED BY ROSS.

* INDICATES ITEM FURNISHED BY ROSS (REVERS OSMOSIS SYSTEM SUPPLIER).

# COASTAL DEVELOPMENT PERMIT PLANS

| NO. | BY | CHK | APP |
|---|---|---|---|
| B | BLB | TAH | EVB |
| A | BLB | TAH | EVB |

| DATE | REVISIONS AND RECORD OF USE |
|---|---|
| 7/30/2019 | 60% SUBMITTAL |
| 3/5/2019 | 30% SUBMITTAL |

BLACK & VEATCH
JOINT VENTURE
FILANC
BLACK & VEATCH

CITY OF MORRO BAY
MORRO BAY WATER RECLAMATION FACILITY (WRF)

RO/UV BUILDING - RO SYSTEM
P&ID
RO CARTRIDGE FILTERS

DESIGNED: BLB, ADV
DETAILED: PVR
CHECKED: TAH
APPROVED:
DATE:

0 1/2 1
IF THIS BAR DOES NOT MEASURE 1" THEN DRAWING IS NOT TO FULL SCALE

PROJECT NO. 400530

51-I-002
SHEET OF XXX

PLOTTED: 30-07-2019 14:58:33
D400530

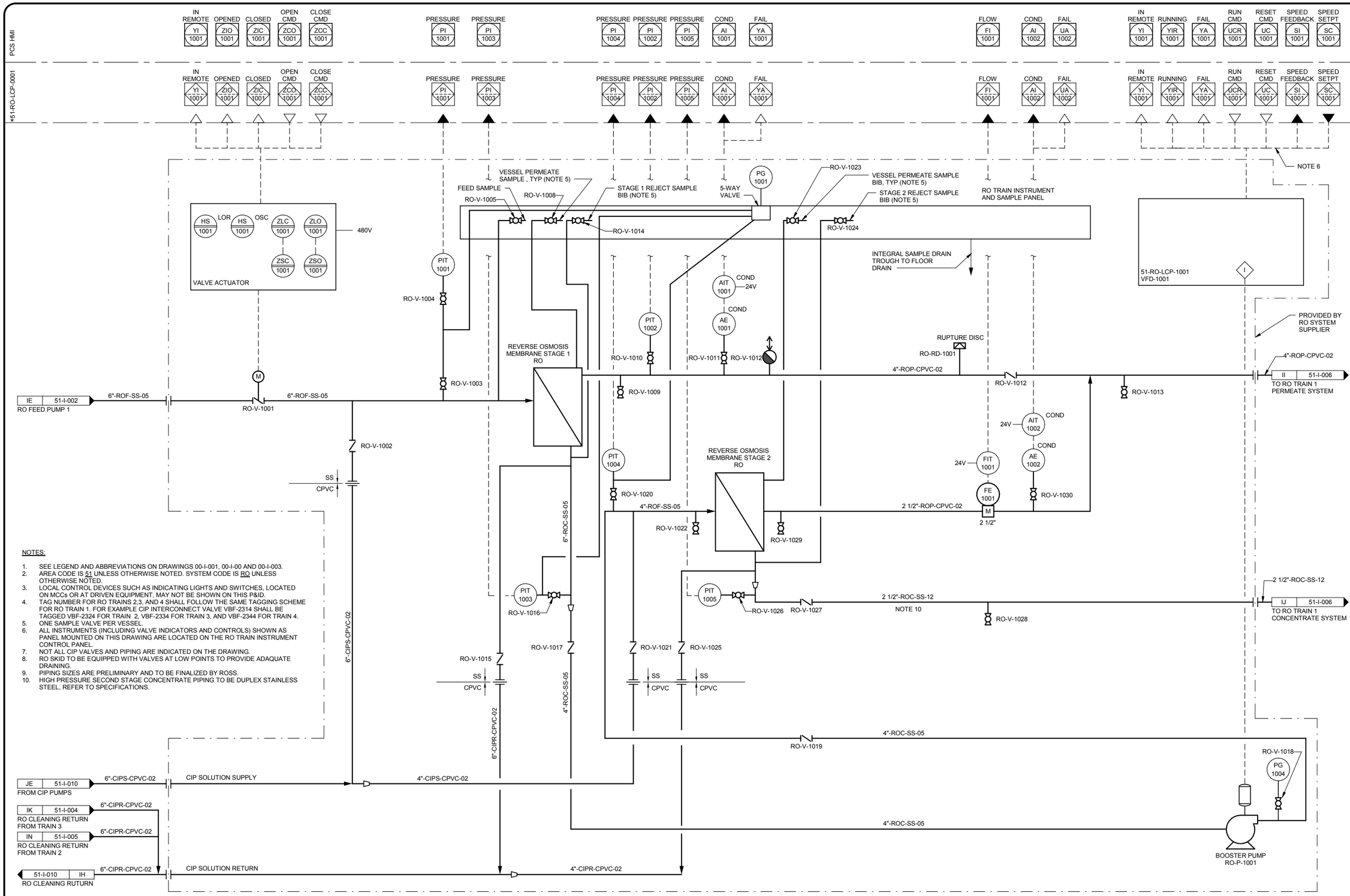


NOTES:

1. SEE LEGEND AND ABBREVIATIONS ON DRAWINGS 00-I-001, 00-I-00 AND 00-I-003.
2. AREA CODE IS 51 UNLESS OTHERWISE NOTED. SYSTEM CODE IS RO UNLESS OTHERWISE NOTED.
3. LOCAL CONTROL DEVICES SUCH AS INDICATING LIGHTS AND SWITCHES, LOCATED ON MCCs OR AT DRIVEN EQUIPMENT, MAY NOT BE SHOWN ON THIS P&ID.
4. TAG NUMBER FOR RO TRAINS 2,3, AND 4 SHALL FOLLOW THE SAME TAGGING SCHEME FOR RO TRAIN 1. FOR EXAMPLE CIP INTERCONNECT VALVE VBF-2314 SHALL BE TAGGED VBF-2324 FOR TRAIN 2, VBF-2334 FOR TRAIN 3, AND VBF-2344 FOR TRAIN 4.
5. ONE SAMPLE VALVE PER VESSEL.
6. ALL INSTRUMENTS (INCLUDING VALVE INDICATORS AND CONTROLS) SHOWN AS PANEL MOUNTED ON THIS DRAWING ARE LOCATED ON THE RO TRAIN INSTRUMENT CONTROL PANEL.
7. NOT ALL CIP VALVES AND PIPING ARE INDICATED ON THE DRAWING.
8. RO SKID TO BE EQUIPPED WITH VALVES AT LOW POINTS TO PROVIDE ADAQUATE DRAINING.
9. PIPING SIZES ARE PRELIMINARY AND TO BE FINALIZED BY ROSS.
10. HIGH PRESSURE SECOND STAGE CONCENTRATE PIPING TO BE DUPLEX STAINLESS STEEL, REFER TO SPECIFICATIONS.

| NO. | BY | CHK | APP |
|---|---|---|---|
| B | BLB | TAH | EVB |
| A | BLB | TAH | EVB |

REVISIONS AND RECORD OF USE

| DATE | |
|---|---|
| 7/30/2019 | 60% SUBMITTAL |
| 3/5/2019 | 30% SUBMITTAL |

BLACK & VEATCH

JOINT VENTURE

FILANC

BLACK & VEATCH

CITY OF MORRO BAY
MORRO BAY WATER
RECLAMATION FACILITY (WRF)

RO/UV BUILDING - RO SYSTEM
P&ID
RO UNIT 1

DESIGNED: BLB, ADV
DETAILED: PVR
CHECKED: TAH
APPROVED:
DATE:

0 1/2 1
IF THIS BAR DOES NOT MEASURE 1" THEN DRAWING IS NOT TO FULL SCALE

PROJECT NO.
400530

51-I-003
SHEET
OF XXX

COASTAL DEVELOPMENT PERMIT PLANS

PLOTTED: 30-07-2019 14:58:33
D400530

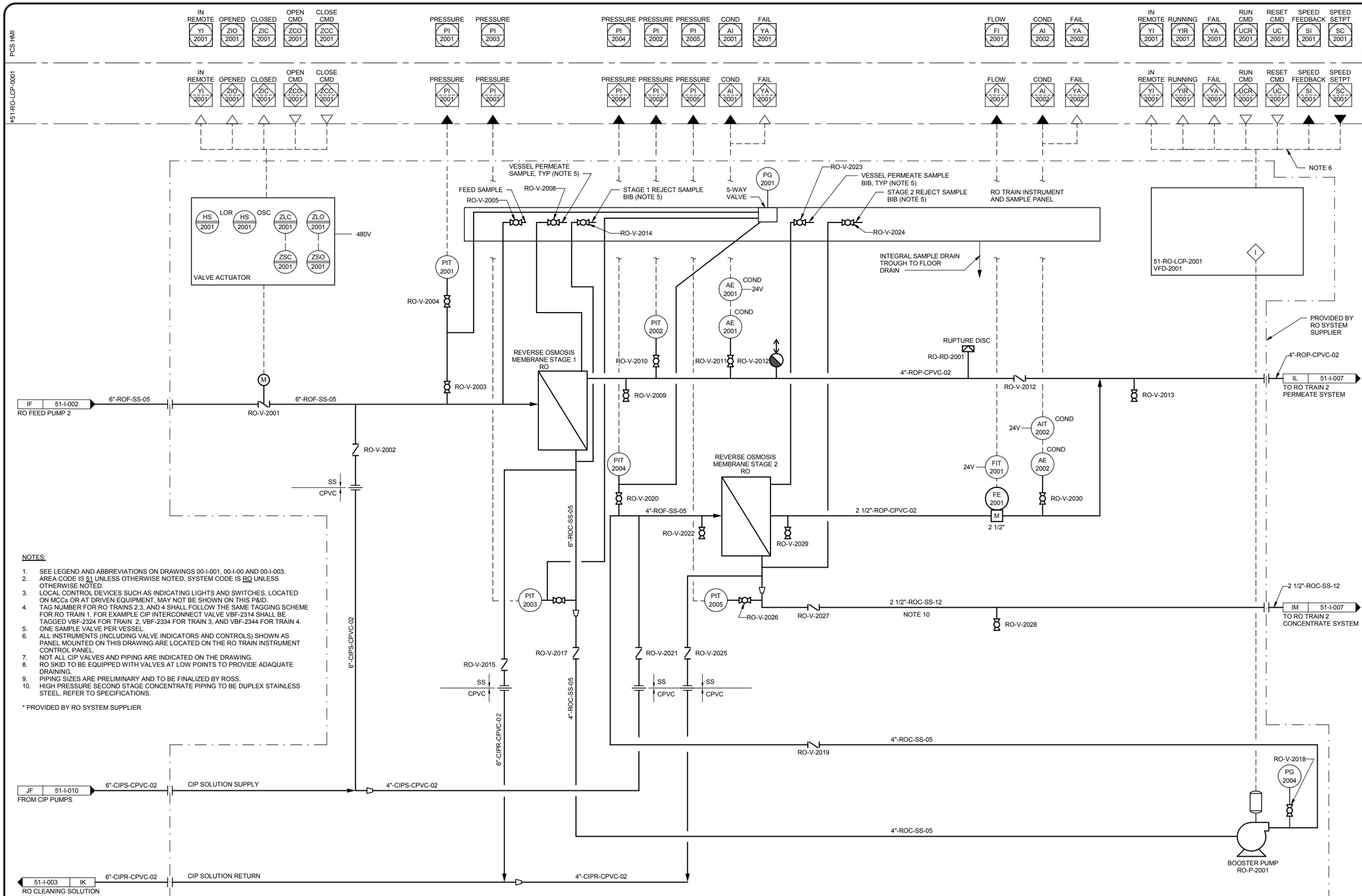


NOTES:

1. SEE LEGEND AND ABBREVIATIONS ON DRAWINGS 00-I-001, 00-I-00 AND 00-I-003.
2. AREA CODE IS 51 UNLESS OTHERWISE NOTED. SYSTEM CODE IS RO UNLESS OTHERWISE NOTED.
3. LOCAL CONTROL DEVICES SUCH AS INDICATING LIGHTS AND SWITCHES, LOCATED ON MCCs OR AT DRIVEN EQUIPMENT, MAY NOT BE SHOWN ON THIS P&ID.
4. TAG NUMBER FOR RO TRAINS 2,3, AND 4 SHALL FOLLOW THE SAME TAGGING SCHEME FOR RO TRAIN 1. FOR EXAMPLE CIP INTERCONNECT VALVE VBF-2314 SHALL BE TAGGED VBF-2324 FOR TRAIN 2, VBF-2334 FOR TRAIN 3, AND VBF-2344 FOR TRAIN 4.
5. ONE SAMPLE VALVE PER VESSEL.
6. ALL INSTRUMENTS (INCLUDING VALVE INDICATORS AND CONTROLS) SHOWN AS PANEL MOUNTED ON THIS DRAWING ARE LOCATED ON THE RO TRAIN INSTRUMENT CONTROL PANEL.
7. NOT ALL CIP VALVES AND PIPING ARE INDICATED ON THE DRAWING.
8. RO SKID TO BE EQUIPPED WITH VALVES AT LOW POINTS TO PROVIDE ADAQUATE DRAINING.
9. PIPING SIZES ARE PRELIMINARY AND TO BE FINALIZED BY ROSS.
10. HIGH PRESSURE SECOND STAGE CONCENTRATE PIPING TO BE DUPLEX STAINLESS STEEL, REFER TO SPECIFICATIONS.

* PROVIDED BY RO SYSTEM SUPPLIER

| NO. | BY | CHK | APP |
|---|---|---|---|
| B | BLB | TAH | EVB |
| A | BLB | TAH | EVB |

| DATE | REVISIONS AND RECORD OF USE |
|---|---|
| 7/30/2019 | 60% SUBMITTAL |
| 3/5/2019 | 30% SUBMITTAL |

BLACK & VEATCH

JOINT VENTURE

FILANC

BLACK & VEATCH

CITY OF MORRO BAY
MORRO BAY WATER
RECLAMATION FACILITY (WRF)

RO/UV BUILDING - RO SYSTEM
P&ID
RO UNIT 2

DESIGNED: BLB, ADV
DETAILED: PVR
CHECKED: TAH
APPROVED:
DATE:

0 1/2 1
IF THIS BAR DOES NOT MEASURE 1" THEN DRAWING IS NOT TO FULL SCALE

PROJECT NO. 400530

51-I-004

SHEET OF XXX

COASTAL DEVELOPMENT PERMIT PLANS

PLOTTED: 30-07-2019 14:58:34
D400530

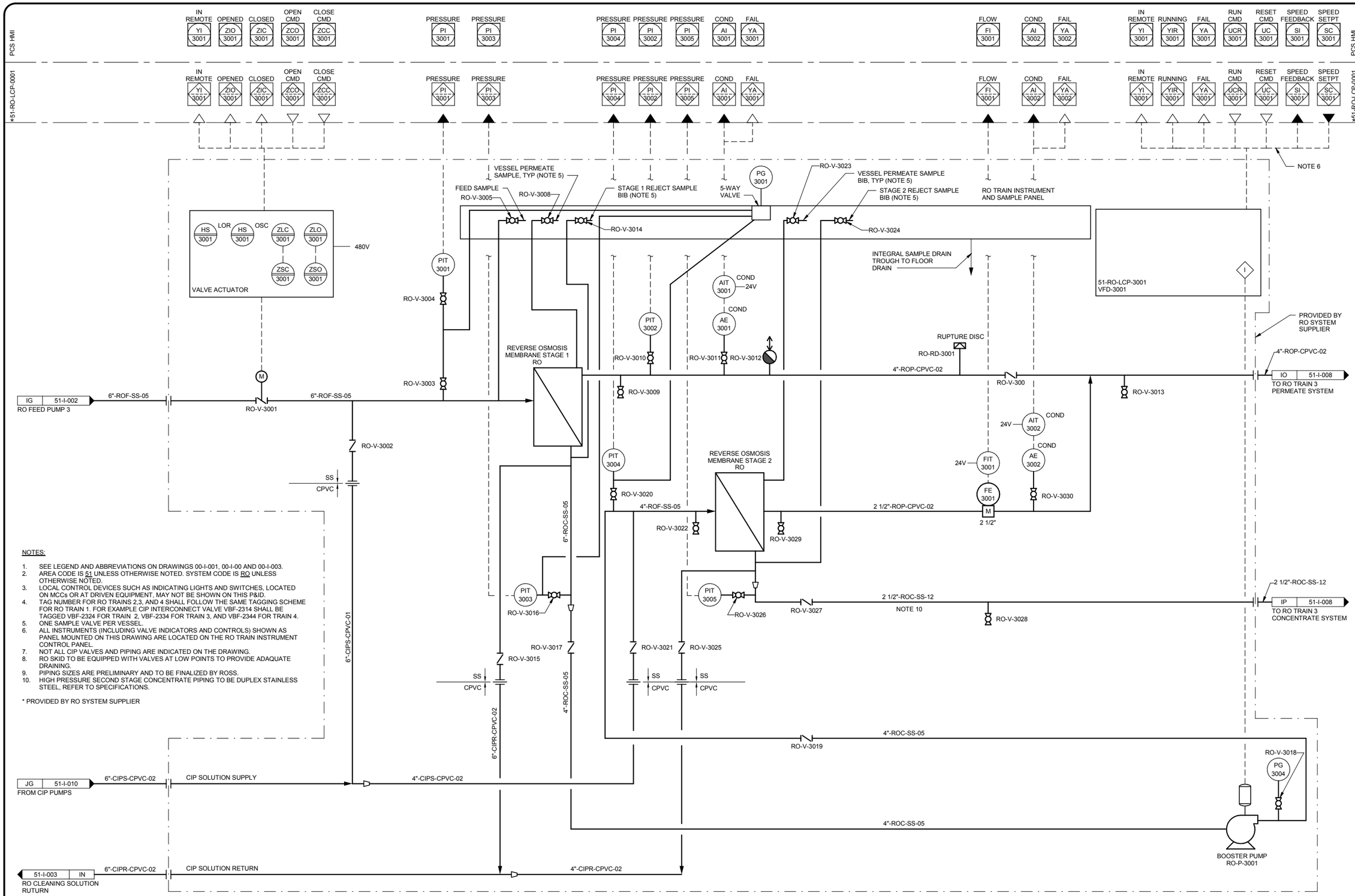


| NO. | BY | CHK | APP |
|---|---|---|---|
| B | BLB | TAH | EVB |
| A | BLB | TAH | EVB |

REVISIONS AND RECORD OF USE

| DATE | |
|---|---|
| 7/30/2019 | 60% SUBMITTAL |
| 3/5/2019 | 30% SUBMITTAL |

BLACK & VEATCH

JOINT VENTURE

FILANC

BLACK & VEATCH

CITY OF MORRO BAY
MORRO BAY WATER
RECLAMATION FACILITY (WRF)

RO/UV BUILDING - RO SYSTEM
P&ID
RO UNIT 3

DESIGNED: BLB, ADV
DETAILED: PVR
CHECKED: TAH
APPROVED:
DATE:

0 1/2 1
IF THIS BAR DOES NOT MEASURE 1" THEN DRAWING IS NOT TO FULL SCALE

PROJECT NO. 400530

51-I-005

SHEET OF XXX

COASTAL DEVELOPMENT PERMIT PLANS

PLOTTED: 30-07-2019 14:58:34

D400530

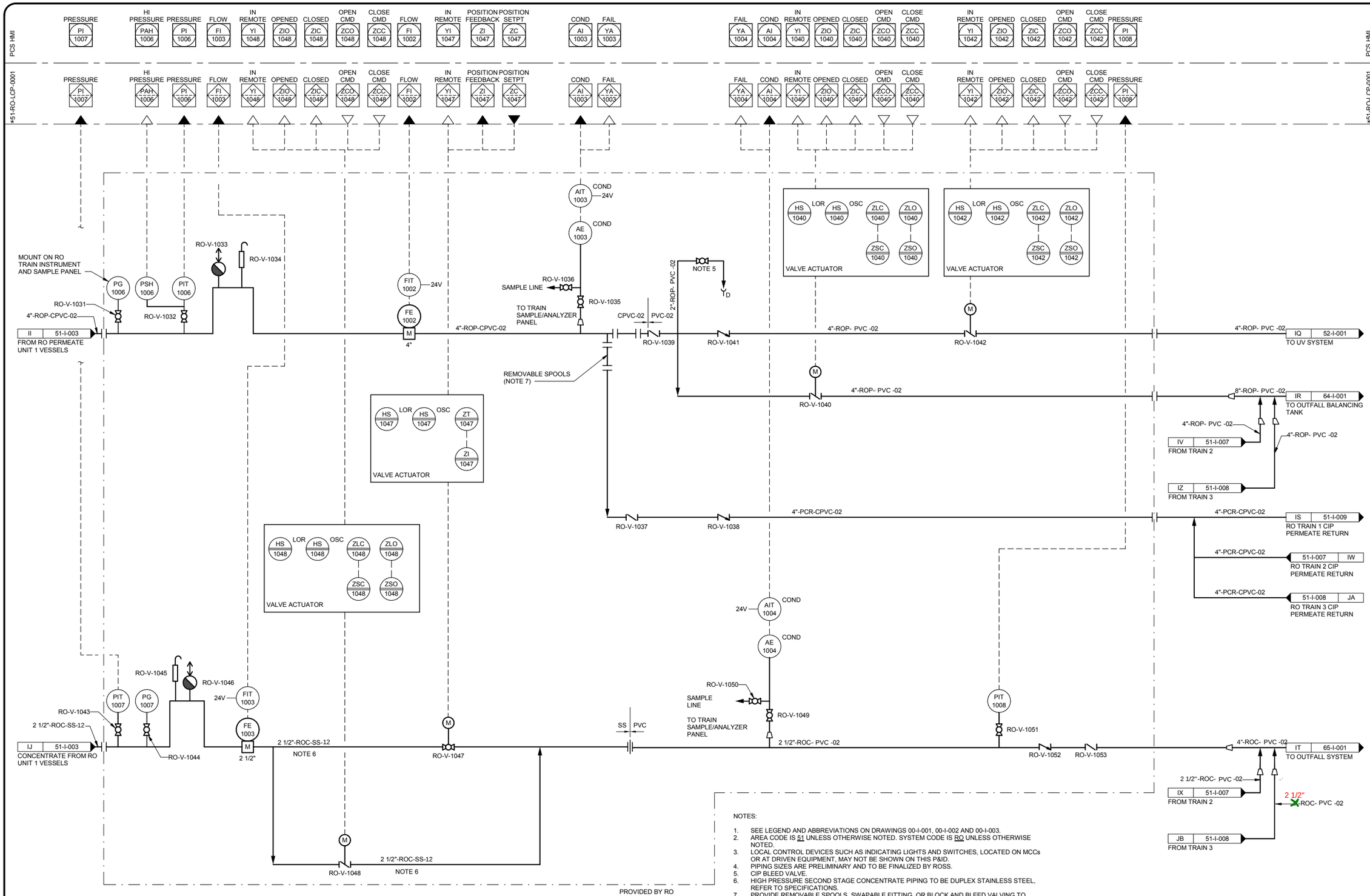


NOTES:

1. SEE LEGEND AND ABBREVIATIONS ON DRAWINGS 00-I-001, 00-I-002 AND 00-I-003.
2. AREA CODE IS 51 UNLESS OTHERWISE NOTED. SYSTEM CODE IS RO UNLESS OTHERWISE NOTED.
3. LOCAL CONTROL DEVICES SUCH AS INDICATING LIGHTS AND SWITCHES, LOCATED ON MCCs OR AT DRIVEN EQUIPMENT, MAY NOT BE SHOWN ON THIS P&ID.
4. PIPING SIZES ARE PRELIMINARY AND TO BE FINALIZED BY ROSS.
5. CIP BLEED VALVE.
6. HIGH PRESSURE SECOND STAGE CONCENTRATE PIPING TO BE DUPLEX STAINLESS STEEL, REFER TO SPECIFICATIONS.
7. PROVIDE REMOVABLE SPOOLS, SWAPABLE FITTING, OR BLOCK AND BLEED VALVING TO PREVENT POTENTIAL CROSS-CONNECTION OF PERMATE AND CIP RETURN. FURNISH SUITABLE BLIND FLANGES TO REPLACE REMOVABLE SPOOL OR SWAPABLE FITTING AS REQUIRED.

* PROVIDED BY RO SYSTEM SUPPLIER

COASTAL DEVELOPMENT PERMIT PLANS

| NO. | BY | CHK | APP |
|---|---|---|---|
| B | BLB | TAH | EVB |
| A | BLB | TAH | EVB |

| DATE | REVISIONS AND RECORD OF USE |
|---|---|
| 7/30/2019 | 60% SUBMITTAL |
| 3/5/2019 | 30% SUBMITTAL |

BLACK & VEATCH
JOINT VENTURE
FILANC
BLACK & VEATCH

CITY OF MORRO BAY
MORRO BAY WATER RECLAMATION FACILITY (WRF)

RO/UV BUILDING - RO SYSTEM P&ID
RO PERMEATE/CONCENTRATE, UNIT 1

DESIGNED: BLB, ADV
DETAILED: PVR
CHECKED: TAH
APPROVED:
DATE:

0 1/2 1
IF THIS BAR DOES NOT MEASURE 1" THEN DRAWING IS NOT TO FULL SCALE

PROJECT NO. 400530

51-I-006
SHEET OF XXX

PLOTTED: 30-07-2019 14:58:34
D400530

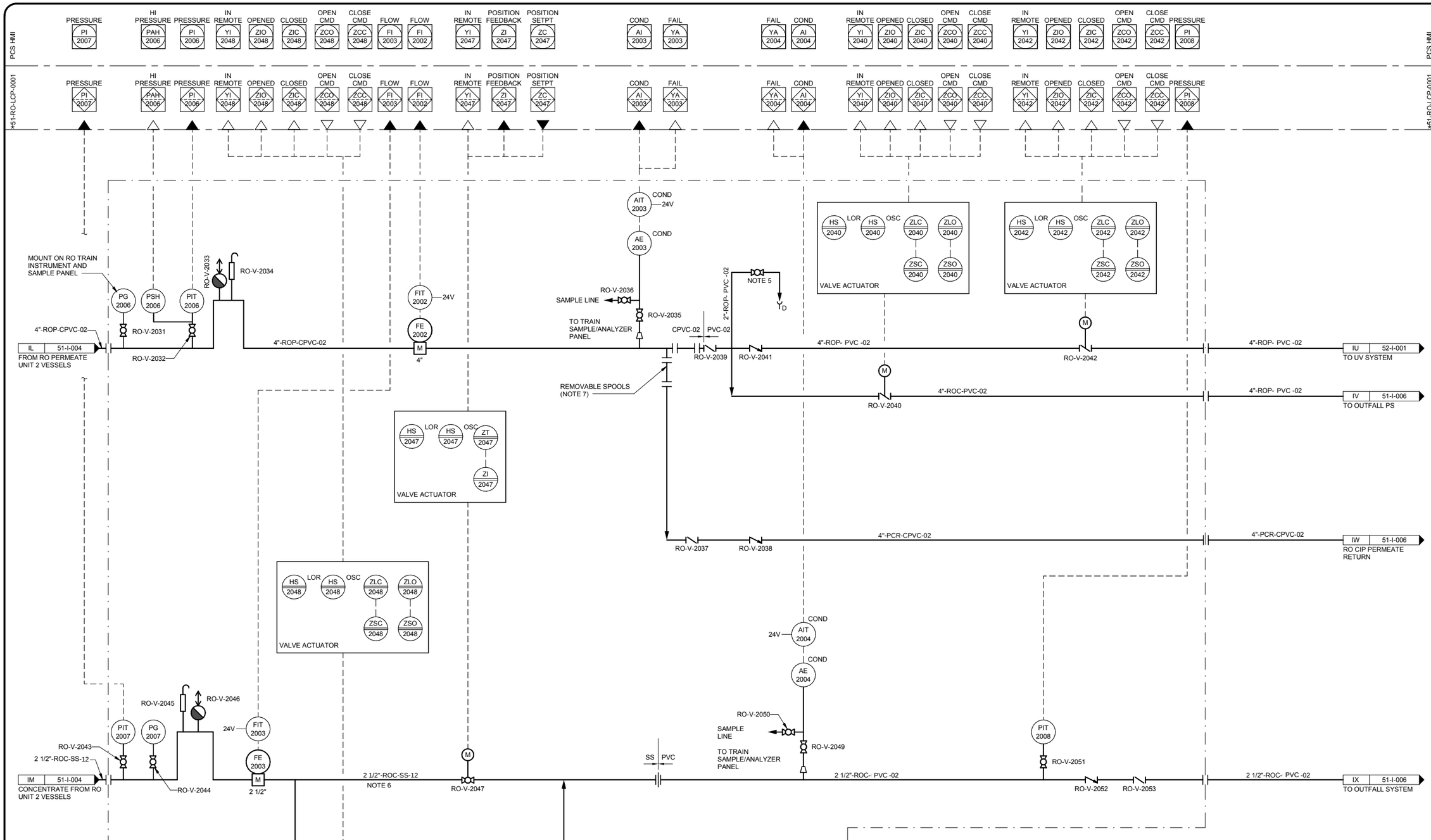


NOTES:

1. SEE LEGEND AND ABBREVIATIONS ON DRAWINGS 00-I-001, 00-I-002 AND 00-I-003.
2. AREA CODE IS 51 UNLESS OTHERWISE NOTED. SYSTEM CODE IS RO UNLESS OTHERWISE NOTED.
3. LOCAL CONTROL DEVICES SUCH AS INDICATING LIGHTS AND SWITCHES, LOCATED ON MCCs OR AT DRIVEN EQUIPMENT, MAY NOT BE SHOWN ON THIS P&ID.
4. PIPING SIZES ARE PRELIMINARY AND TO BE FINALIZED BY ROSS.
5. CIP BLEED VALVE.
6. HIGH PRESSURE SECOND STAGE CONCENTRATE PIPING TO BE DUPLEX STAINLESS STEEL, REFER TO SPECIFICATIONS.
7. PROVIDE REMOVABLE SPOOLS, SWAPABLE FITTING, OR BLOCK AND BLEED VALVING TO PREVENT POTENTIAL CROSS-CONNECTION OF PERMATE AND CIP RETURN. FURNISH SUITABLE BLIND FLANGES TO REPLACE REMOVABLE SPOOL OR SWAPABLE FITTING AS REQUIRED.

* PROVIDED BY RO SYSTEM SUPPLIER

# COASTAL DEVELOPMENT PERMIT PLANS

| NO. | BY | CHK | APP |
|---|---|---|---|
| B | BLB | TAH | EVB |
| A | BLB | TAH | EVB |

| DATE | REVISIONS AND RECORD OF USE |
|---|---|
| 7/30/2019 | 60% SUBMITTAL |
| 3/5/2019 | 30% SUBMITTAL |

BLACK & VEATCH

JOINT VENTURE

FILANC

BLACK & VEATCH

CITY OF MORRO BAY
MORRO BAY WATER RECLAMATION FACILITY (WRF)

RO/UV BUILDING - RO SYSTEM
P&ID
RO PERMEATE/CONCENTRATE, UNIT 2

DESIGNED: BLB, ADV
DETAILED: PVR
CHECKED: TAH
APPROVED:
DATE:

0 1/2 1
IF THIS BAR DOES NOT MEASURE 1" THEN DRAWING IS NOT TO FULL SCALE

PROJECT NO. 400530

51-I-007
SHEET OF XXX

PLOTTED: 30-07-2019 14:58:35
D400530

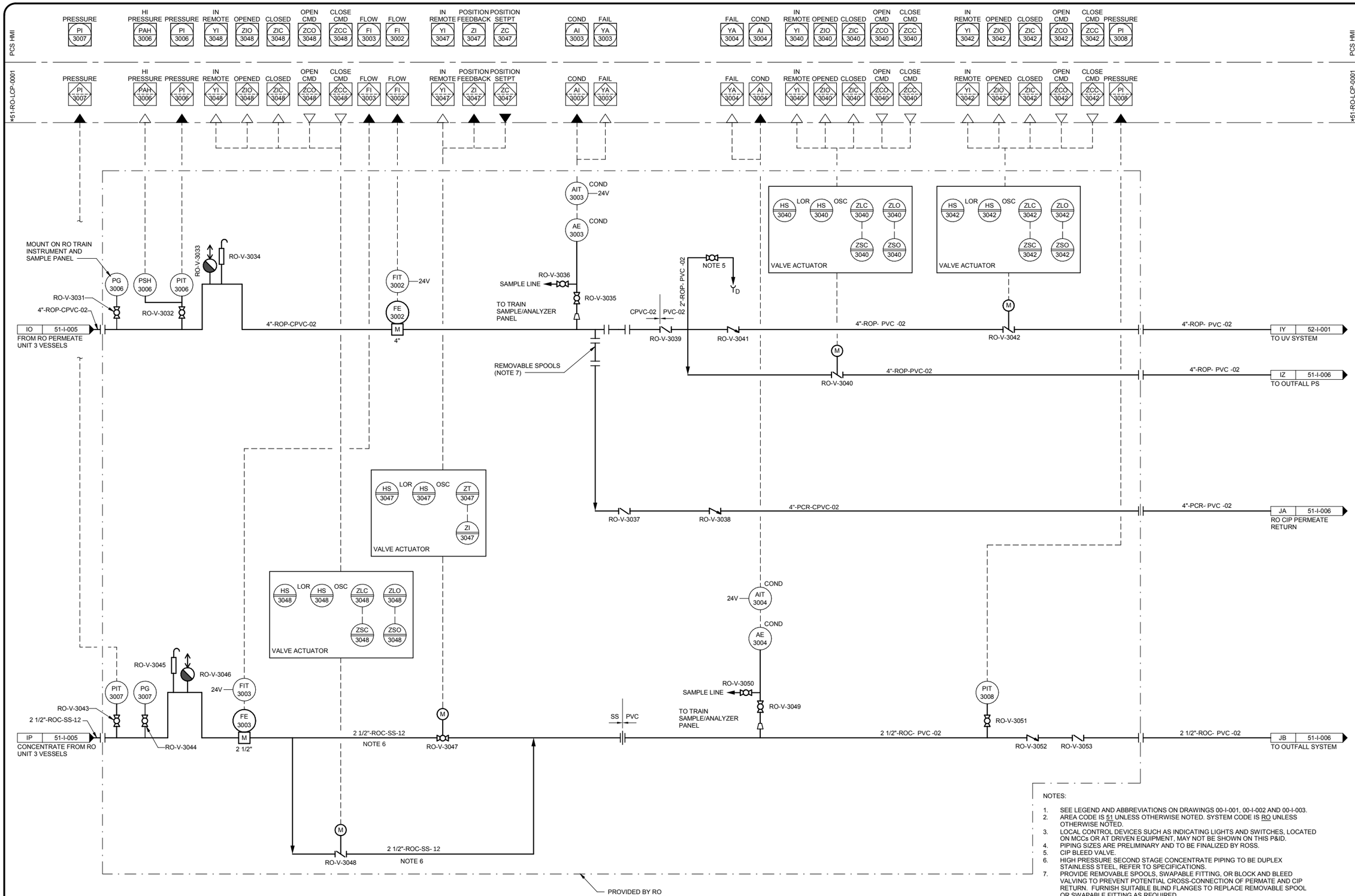


NOTES:

1. SEE LEGEND AND ABBREVIATIONS ON DRAWINGS 00-I-001, 00-I-002 AND 00-I-003.
2. AREA CODE IS 51 UNLESS OTHERWISE NOTED. SYSTEM CODE IS RO UNLESS OTHERWISE NOTED.
3. LOCAL CONTROL DEVICES SUCH AS INDICATING LIGHTS AND SWITCHES, LOCATED ON MCCs OR AT DRIVEN EQUIPMENT, MAY NOT BE SHOWN ON THIS P&ID.
4. PIPING SIZES ARE PRELIMINARY AND TO BE FINALIZED BY ROSS.
5. CIP BLEED VALVE.
6. HIGH PRESSURE SECOND STAGE CONCENTRATE PIPING TO BE DUPLEX STAINLESS STEEL, REFER TO SPECIFICATIONS.
7. PROVIDE REMOVABLE SPOOLS, SWAPABLE FITTING, OR BLOCK AND BLEED VALVING TO PREVENT POTENTIAL CROSS-CONNECTION OF PERMATE AND CIP RETURN. FURNISH SUITABLE BLIND FLANGES TO REPLACE REMOVABLE SPOOL OR SWAPABLE FITTING AS REQUIRED.

* PROVIDED BY RO SYSTEM SUPPLIER

COASTAL DEVELOPMENT PERMIT PLANS

| NO. | BY | CHK | APP |
|---|---|---|---|
| B | BLB | TAH | EVB |
| A | BLB | TAH | EVB |

| DATE | REVISIONS AND RECORD OF USE |
|---|---|
| 7/30/2019 | 60% SUBMITTAL |
| 3/5/2019 | 30% SUBMITTAL |

BLACK & VEATCH

JOINT VENTURE

FILANC

BLACK & VEATCH

CITY OF MORRO BAY
MORRO BAY WATER
RECLAMATION FACILITY (WRF)

RO/UV BUILDING - RO SYSTEM
P&ID
RO PERMEATE/CONCENTRATE, UNIT 3

DESIGNED: BLB, ADV
DETAILED: PVR
CHECKED: TAH
APPROVED:
DATE:

0 1/2 1
IF THIS BAR DOES NOT MEASURE 1" THEN DRAWING IS NOT TO FULL SCALE

PROJECT NO.
400530

51-I-008
SHEET
OF XXX

PLOTTED: 30-07-2019 14:58:35
D400530

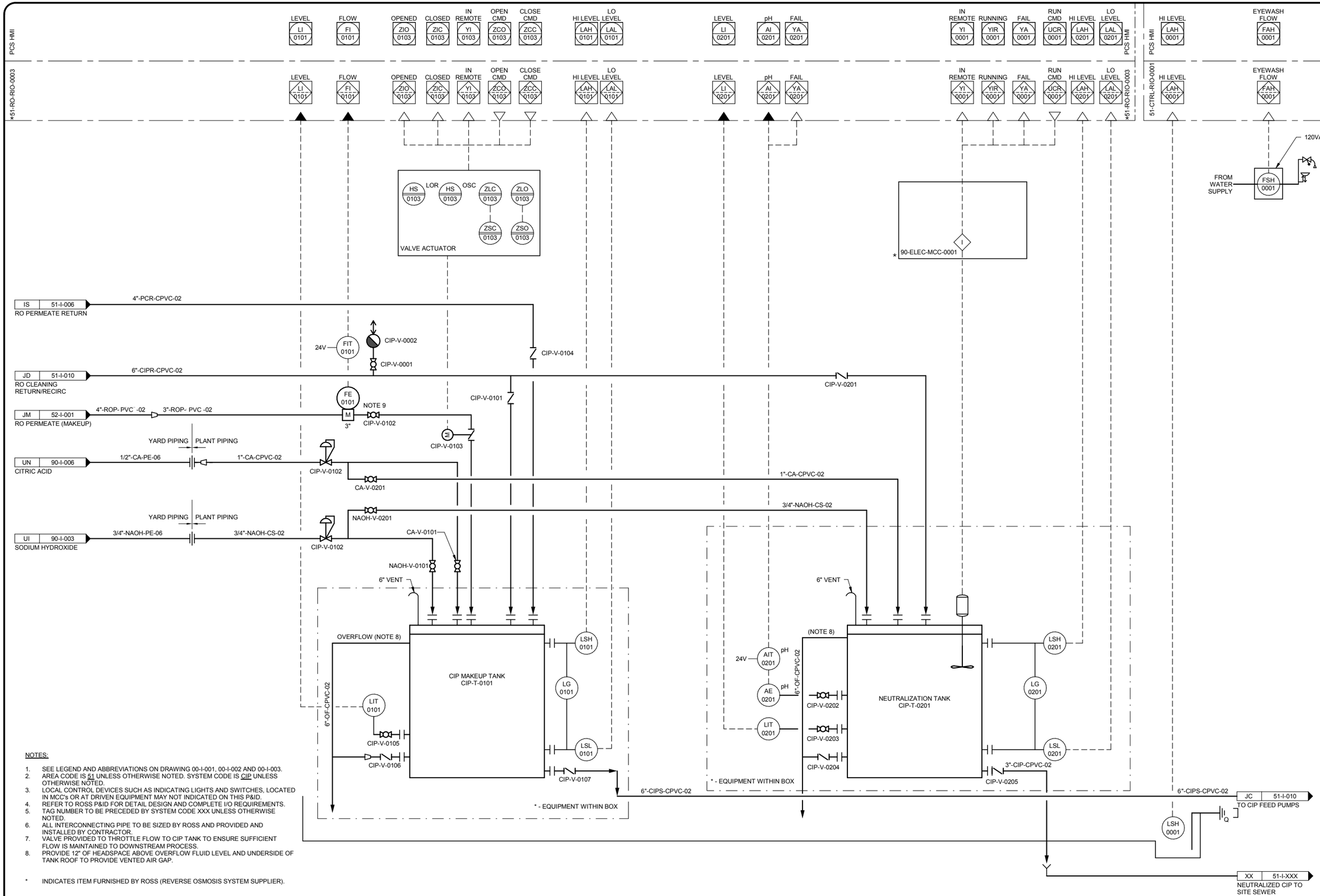


NOTES:

1. SEE LEGEND AND ABBREVIATIONS ON DRAWING 00-I-001, 00-I-002 AND 00-I-003.
2. AREA CODE IS 51 UNLESS OTHERWISE NOTED. SYSTEM CODE IS CIP UNLESS OTHERWISE NOTED.
3. LOCAL CONTROL DEVICES SUCH AS INDICATING LIGHTS AND SWITCHES, LOCATED IN MCC's OR AT DRIVEN EQUIPMENT MAY NOT INDICATED ON THIS P&ID.
4. REFER TO ROSS P&ID FOR DETAIL DESIGN AND COMPLETE I/O REQUIREMENTS.
5. TAG NUMBER TO BE PRECEDED BY SYSTEM CODE XXX UNLESS OTHERWISE NOTED.
6. ALL INTERCONNECTING PIPE TO BE SIZED BY ROSS AND PROVIDED AND INSTALLED BY CONTRACTOR.
7. VALVE PROVIDED TO THROTTLE FLOW TO CIP TANK TO ENSURE SUFFICIENT FLOW IS MAINTAINED TO DOWNSTREAM PROCESS.
8. PROVIDE 12" OF HEADSPACE ABOVE OVERFLOW FLUID LEVEL AND UNDERSIDE OF TANK ROOF TO PROVIDE VENTED AIR GAP.

* INDICATES ITEM FURNISHED BY ROSS (REVERSE OSMOSIS SYSTEM SUPPLIER).

| NO. | BY | CHK | APP |
|---|---|---|---|
| B | BLB | TAH | EVB |
| A | BLB | TAH | EVB |

REVISIONS AND RECORD OF USE

| DATE | |
|---|---|
| 7/30/2019 | 60% SUBMITTAL |
| 3/5/2019 | 30% SUBMITTAL |

BLACK & VEATCH

JOINT VENTURE

FILANC

BLACK & VEATCH

CITY OF MORRO BAY
MORRO BAY WATER
RECLAMATION FACILITY (WRF)

RO/UV BUILDING - RO SYSTEM
P&ID
RO CIP TANKS

DESIGNED: BLB, ADV
DETAILED: PVR
CHECKED: TAH
APPROVED:
DATE:

0 1/2 1
IF THIS BAR DOES NOT MEASURE 1" THEN DRAWING IS NOT TO FULL SCALE

PROJECT NO.
400530

51-I-009
SHEET
OF XXX

COASTAL DEVELOPMENT PERMIT PLANS

PLOTTED: 30-07-2019 14:58:36
D400530

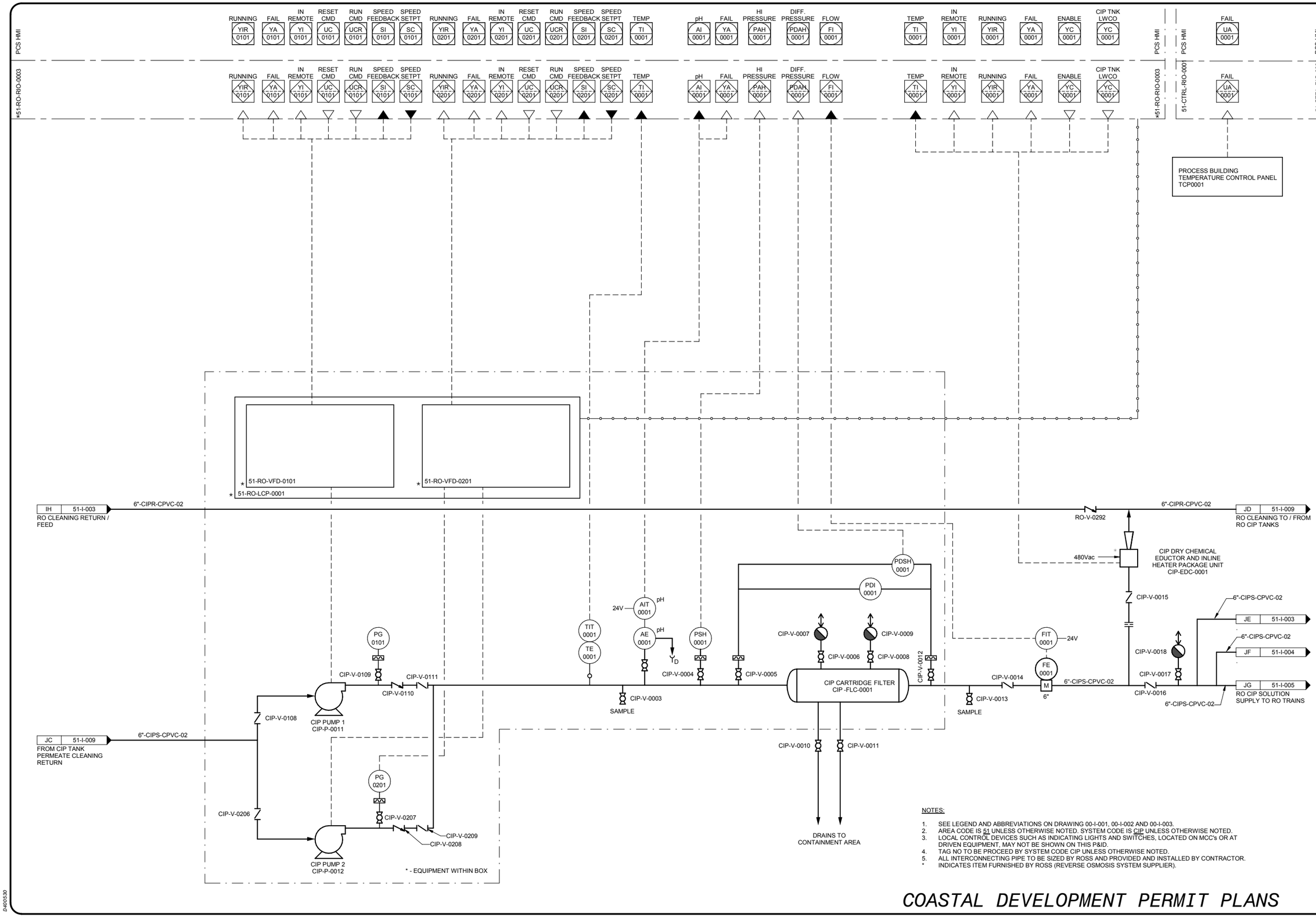


NOTES:

1. SEE LEGEND AND ABBREVIATIONS ON DRAWING 00-I-001, 00-I-002 AND 00-I-003.
2. AREA CODE IS 51 UNLESS OTHERWISE NOTED. SYSTEM CODE IS CIP UNLESS OTHERWISE NOTED.
3. LOCAL CONTROL DEVICES SUCH AS INDICATING LIGHTS AND SWITCHES, LOCATED ON MCC's OR AT DRIVEN EQUIPMENT, MAY NOT BE SHOWN ON THIS P&ID.
4. TAG NO TO BE PROCEED BY SYSTEM CODE CIP UNLESS OTHERWISE NOTED.
5. ALL INTERCONNECTING PIPE TO BE SIZED BY ROSS AND PROVIDED AND INSTALLED BY CONTRACTOR.

* INDICATES ITEM FURNISHED BY ROSS (REVERSE OSMOSIS SYSTEM SUPPLIER).

# COASTAL DEVELOPMENT PERMIT PLANS

| NO. | BY | CHK | APP |
|---|---|---|---|
| B | BLB | TAH | EVB |
| A | BLB | TAH | EVB |

| DATE | REVISIONS AND RECORD OF USE |
|---|---|
| 7/30/2019 | 60% SUBMITTAL |
| 3/5/2019 | 30% SUBMITTAL |

BLACK & VEATCH
JOINT VENTURE
FILANC
BLACK & VEATCH

CITY OF MORRO BAY
MORRO BAY WATER RECLAMATION FACILITY (WRF)

RO/UV BUILDING - RO SYSTEM
P&ID
RO CIP PUMPS

DESIGNED: BLB, ADV
DETAILED: PVR
CHECKED: TAH
APPROVED:
DATE:

0 1/2 1
IF THIS BAR DOES NOT MEASURE 1" THEN DRAWING IS NOT TO FULL SCALE

PROJECT NO. 400530

51-I-010
SHEET OF XXX

PLOTTED: 30-07-2019 14:58:36
D400530

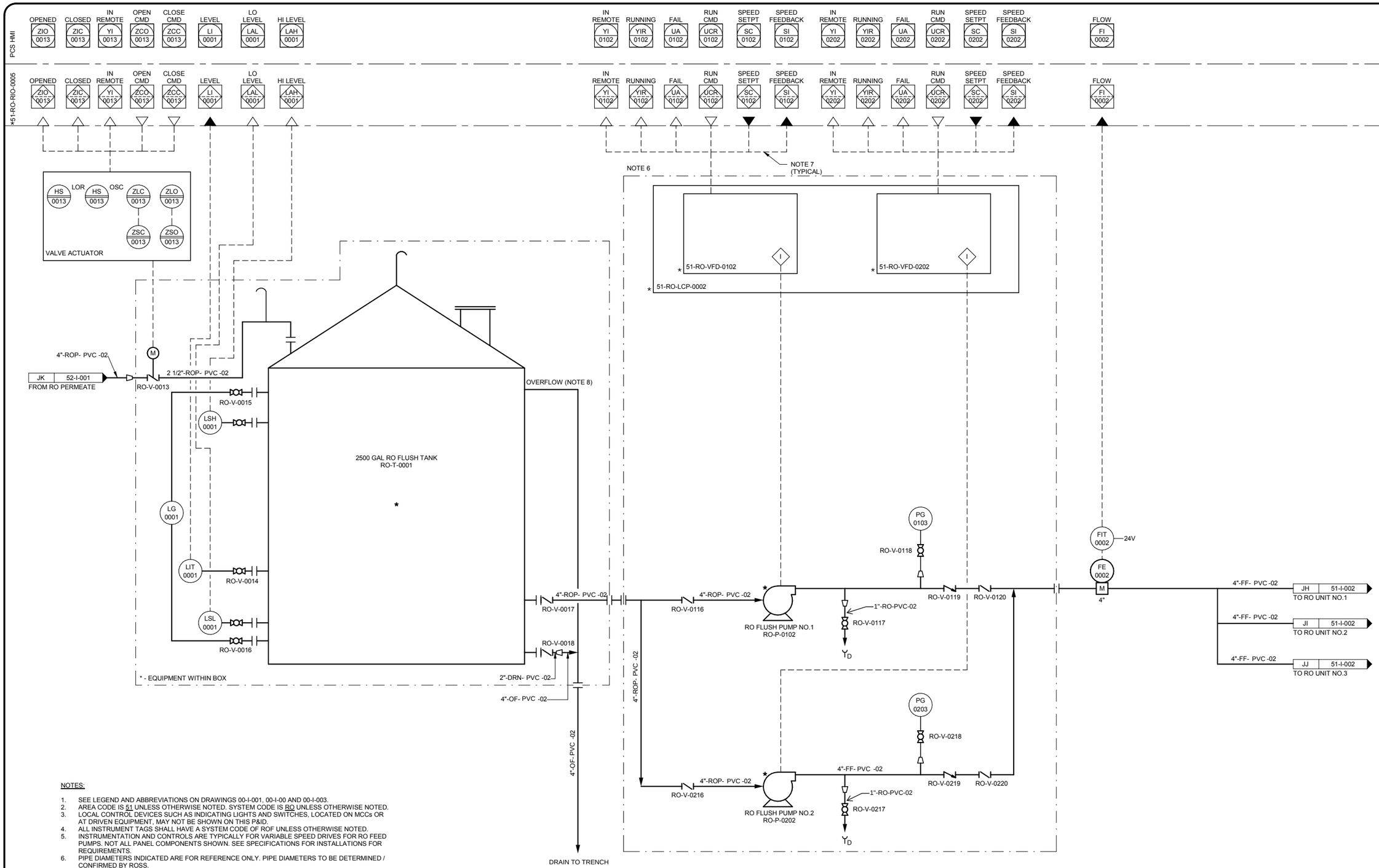


NOTES:

1. SEE LEGEND AND ABBREVIATIONS ON DRAWINGS 00-I-001, 00-I-00 AND 00-I-003.
2. AREA CODE IS 51 UNLESS OTHERWISE NOTED. SYSTEM CODE IS RO UNLESS OTHERWISE NOTED.
3. LOCAL CONTROL DEVICES SUCH AS INDICATING LIGHTS AND SWITCHES, LOCATED ON MCCs OR AT DRIVEN EQUIPMENT, MAY NOT BE SHOWN ON THIS P&ID.
4. ALL INSTRUMENT TAGS SHALL HAVE A SYSTEM CODE OF ROF UNLESS OTHERWISE NOTED.
5. INSTRUMENTATION AND CONTROLS ARE TYPICALLY FOR VARIABLE SPEED DRIVES FOR RO FEED PUMPS. NOT ALL PANEL COMPONENTS SHOWN. SEE SPECIFICATIONS FOR INSTALLATIONS FOR REQUIREMENTS.
6. PIPE DIAMETERS INDICATED ARE FOR REFERENCE ONLY. PIPE DIAMETERS TO BE DETERMINED / CONFIRMED BY ROSS.
7. ETHERNET/IP CAT6 CONNECTION TO CIP-RIO NETWORK SWITCH.
8. PROVIDE 12" OF HEADSPACE ABOVE OVERFLOW FLUID LEVEL AND UNDERSIDE OF TANK ROOF TO PROVIDE VENTED AIR GAP.

* PROVIDED BY RO SYSTEM SUPPLIER

| NO. | BY | CHK | APP |
|---|---|---|---|
| B | BLB | TAH | EVB |
| A | BLB | TAH | EVB |

| DATE | REVISIONS AND RECORD OF USE |
|---|---|
| 7/30/2019 | 60% SUBMITTAL |
| 3/5/2019 | 30% SUBMITTAL |

BLACK & VEATCH
JOINT VENTURE
FILANC
BLACK & VEATCH

CITY OF MORRO BAY
MORRO BAY WATER
RECLAMATION FACILITY (WRF)

RO/UV BUILDING - RO SYSTEM
P&ID
RO FLUSH SYSTEM

DESIGNED: BLB, ADV
DETAILED: PVR
CHECKED: TAH
APPROVED:
DATE:

0 1/2 1
IF THIS BAR DOES NOT MEASURE 1" THEN DRAWING IS NOT TO FULL SCALE

PROJECT NO. 400530

51-I-011
SHEET
OF XXX

COASTAL DEVELOPMENT PERMIT PLANS

PLOTTED: 30-07-2019 14:58:36
D400530

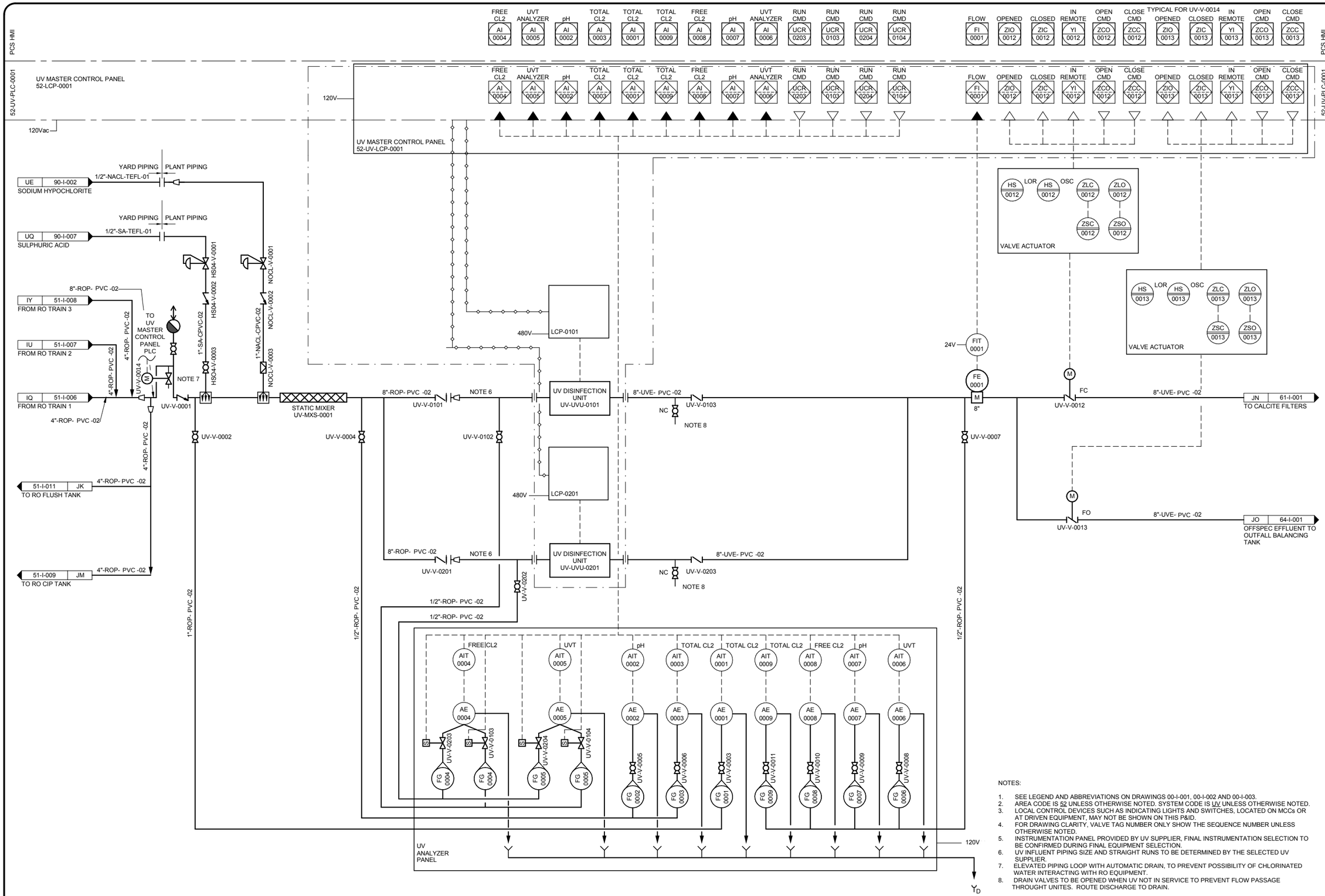


NOTES:

1. SEE LEGEND AND ABBREVIATIONS ON DRAWINGS 00-I-001, 00-I-002 AND 00-I-003.
2. AREA CODE IS 52 UNLESS OTHERWISE NOTED. SYSTEM CODE IS UV UNLESS OTHERWISE NOTED.
3. LOCAL CONTROL DEVICES SUCH AS INDICATING LIGHTS AND SWITCHES, LOCATED ON MCCs OR AT DRIVEN EQUIPMENT, MAY NOT BE SHOWN ON THIS P&ID.
4. FOR DRAWING CLARITY, VALVE TAG NUMBER ONLY SHOW THE SEQUENCE NUMBER UNLESS OTHERWISE NOTED.
5. INSTRUMENTATION PANEL PROVIDED BY UV SUPPLIER, FINAL INSTRUMENTATION SELECTION TO BE CONFIRMED DURING FINAL EQUIPMENT SELECTION.
6. UV INFLUENT PIPING SIZE AND STRAIGHT RUNS TO BE DETERMINED BY THE SELECTED UV SUPPLIER.
7. ELEVATED PIPING LOOP WITH AUTOMATIC DRAIN, TO PREVENT POSSIBILITY OF CHLORINATED WATER INTERACTING WITH RO EQUIPMENT.
8. DRAIN VALVES TO BE OPENED WHEN UV NOT IN SERVICE TO PREVENT FLOW PASSAGE THROUGHT UNITES. ROUTE DISCHARGE TO DRAIN.

# COASTAL DEVELOPMENT PERMIT PLANS

| NO. | BY | CHK | APP | REVISIONS AND RECORD OF USE | DATE |
|---|---|---|---|---|---|
| B | BLB | TAH | EVB | 60% SUBMITTAL | 7/30/2019 |
| A | BLB | TAH | EVB | 30% SUBMITTAL | 3/5/2019 |

BLACK & VEATCH
JOINT VENTURE
FILANC
BLACK & VEATCH

CITY OF MORRO BAY
MORRO BAY WATER RECLAMATION FACILITY (WRF)

RO/UV BUILDING - UV SYSTEM
P&ID
UV/AOP SYSTEM

DESIGNED: Designer
DETAILED: Author
CHECKED: Checker
APPROVED: Approver
DATE:

0 1/2 1
IF THIS BAR DOES NOT MEASURE 1" THEN DRAWING IS NOT TO FULL SCALE

PROJECT NO. 400530

52-I-001
SHEET OF XXX

PLOTTED: 30-07-2019 14:58:37
D400530

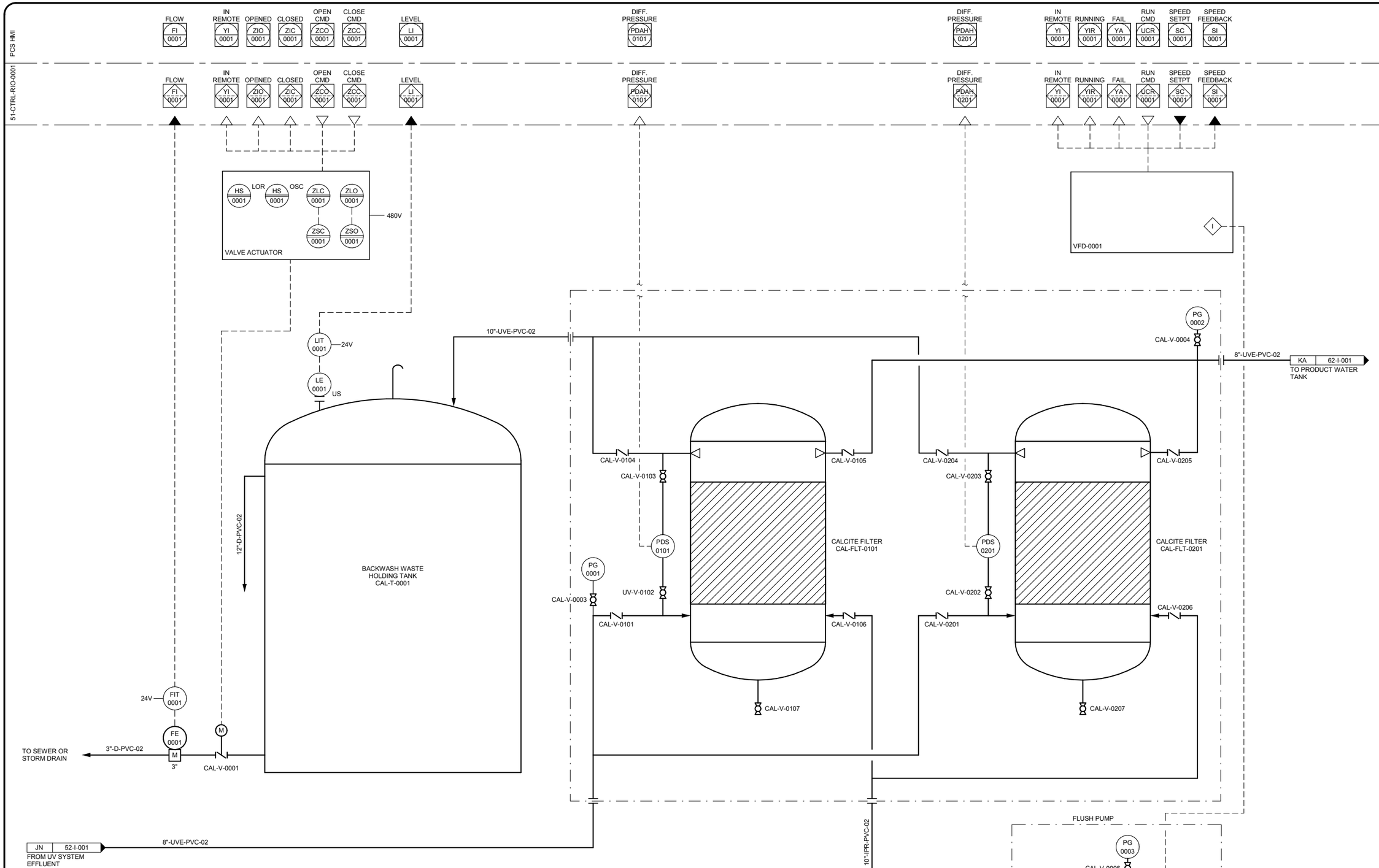


NOTES:

1. SEE LEGEND AND ABBREVIATIONS ON DRAWINGS 00-I-001, 00-I-002 AND 00-I-003.
2. AREA CODE IS 61 UNLESS OTHERWISE NOTED. SYSTEM CODE IS CAL UNLESS OTHERWISE NOTED.

COASTAL DEVELOPMENT PERMIT PLANS

| NO. | BY | CHK | APP |
|---|---|---|---|
| B | BLB | TAH | EVB |
| A | BLB | TAH | EVB |

REVISIONS AND RECORD OF USE

| DATE | |
|---|---|
| 7/30/2019 | 60% SUBMITTAL |
| 3/5/2019 | 30% SUBMITTAL |

BLACK & VEATCH

JOINT VENTURE

FILANC

BLACK & VEATCH

CITY OF MORRO BAY
MORRO BAY WATER
RECLAMATION FACILITY (WRF)

PRODUCT WATER AREA - CALCITE CONTACTOR
P&ID
CALCITE REMINERALIZATION SYSTEM

DESIGNED: BLB, KEZ
DETAILED: PVR
CHECKED: TAH
APPROVED:
DATE:

0 1/2 1
IF THIS BAR DOES NOT MEASURE 1" THEN DRAWING IS NOT TO FULL SCALE

PROJECT NO. 400530

61-I-001

SHEET OF

PLOTTED: 30-07-2019 12:54:07

D400530

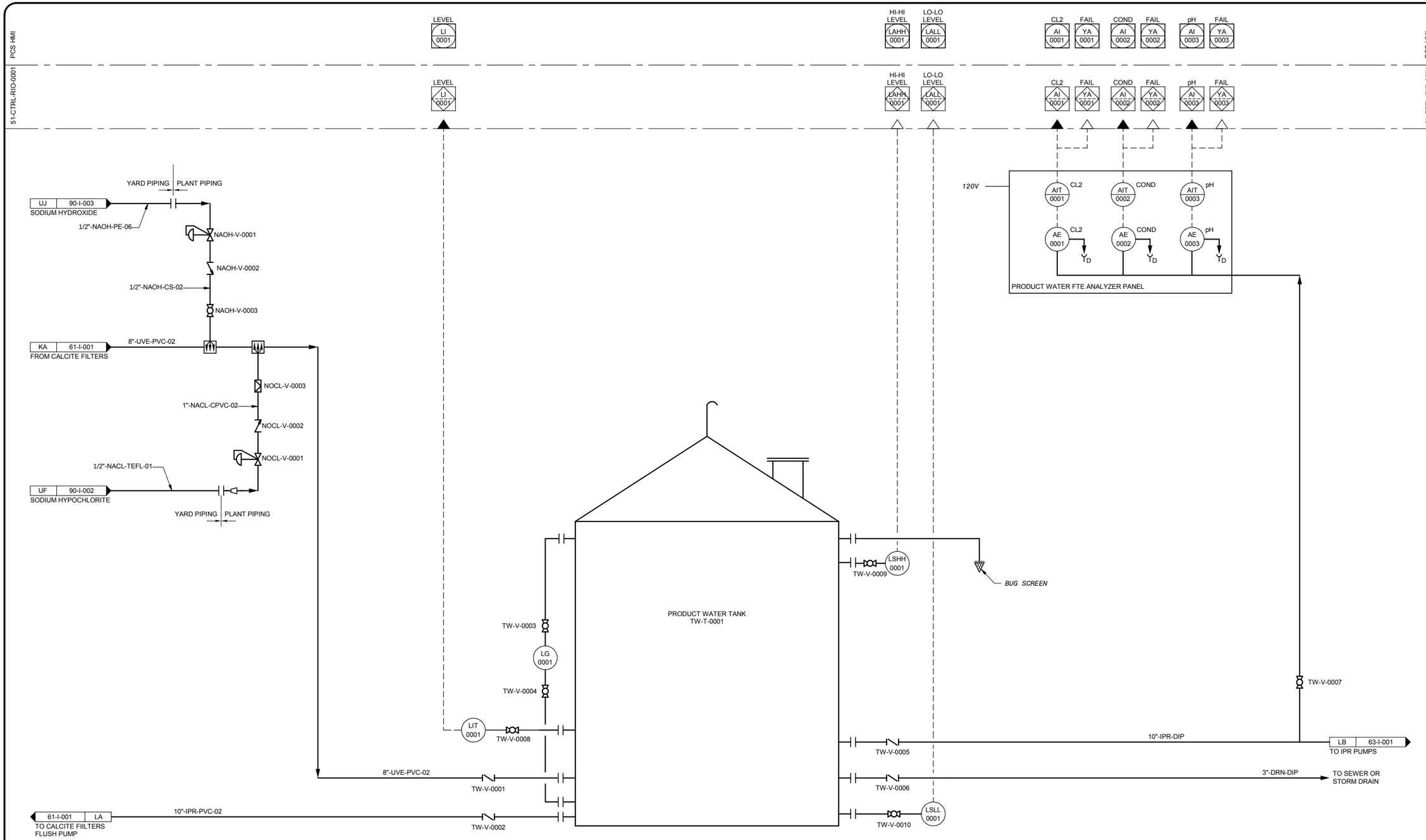


NOTES:

1. SEE LEGEND AND ABBREVIATIONS ON DRAWINGS 00-I-001, 00-I-002 AND 00-I-003.
2. AREA CODE IS 62 UNLESS OTHERWISE NOTED. SYSTEM CODE IS TW UNLESS OTHERWISE NOTED.
3. LOCAL CONTROL DEVICES SUCH AS INDICATING LIGHTS AND SWITCHES, LOCATED ON MCCs OR AT DRIVEN EQUIPMENT, MAY NOT BE SHOWN ON THIS P&ID.

| NO. | BY | CHK | APP |
|---|---|---|---|
| B | BLB | TAH | EVB |
| A | BLB | TAH | EVB |

REVISIONS AND RECORD OF USE

| DATE | |
|---|---|
| 7/30/2019 | 60% SUBMITTAL |
| 3/5/2019 | 30% SUBMITTAL |

BLACK & VEATCH
JOINT VENTURE
FILANC
BLACK & VEATCH

CITY OF MORRO BAY
MORRO BAY WATER
RECLAMATION FACILITY (WRF)

PRODUCT WATER AREA - IPR PRODUCT WATER STORAGE TANK P&ID
IPR PRODUCT WATER STORAGE TANK

DESIGNED: BLB, KEZ
DETAILED: PVR
CHECKED: TAH
APPROVED:
DATE:

0 1/2 1
IF THIS BAR DOES NOT MEASURE 1" THEN DRAWING IS NOT TO FULL SCALE

PROJECT NO. 400530

62-I-001
SHEET
OF

COASTAL DEVELOPMENT PERMIT PLANS

PLOTTED: 30-07-2019 12:54:08
D400530

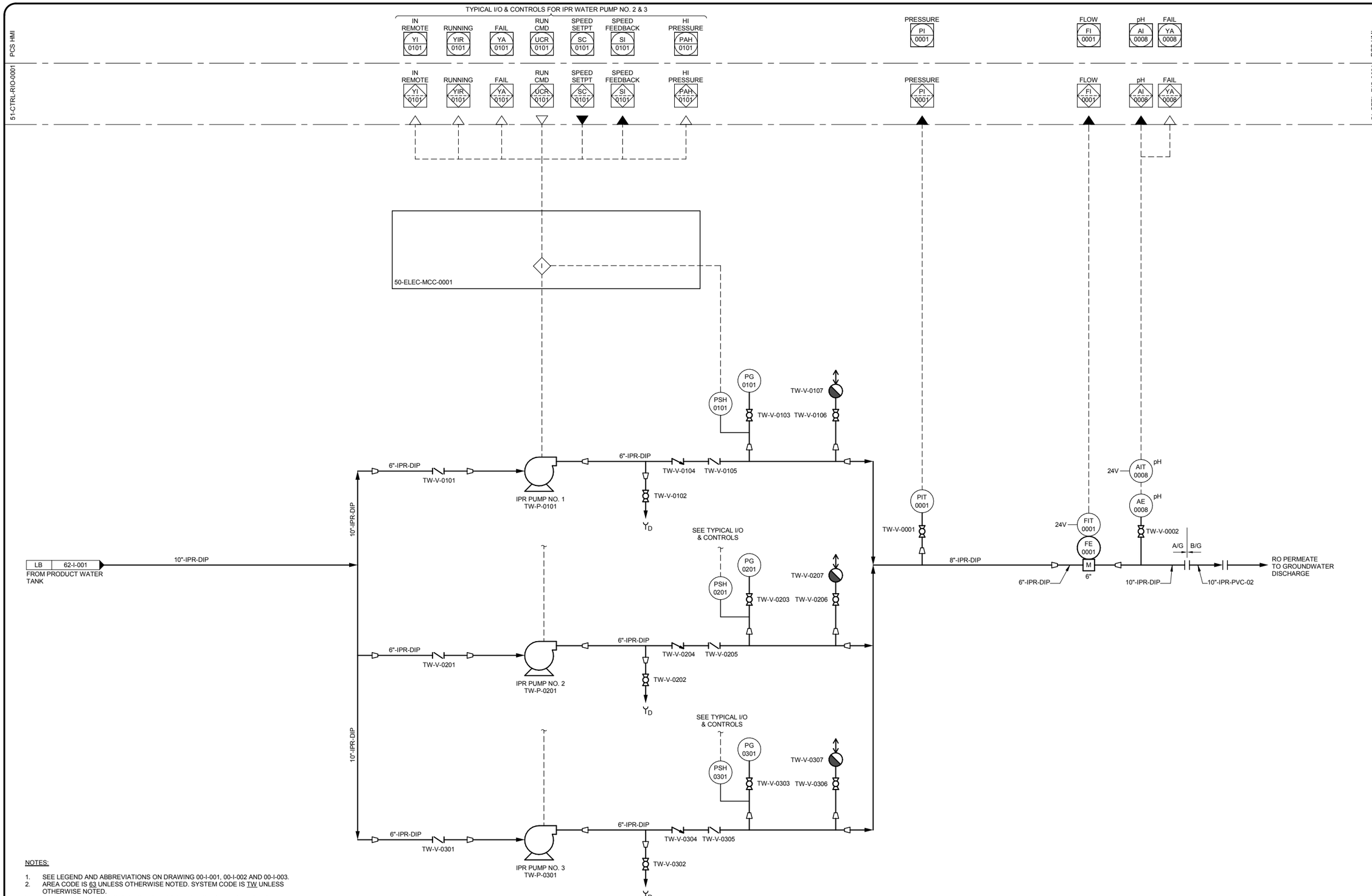


NOTES:

1. SEE LEGEND AND ABBREVIATIONS ON DRAWING 00-I-001, 00-I-002 AND 00-I-003.
2. AREA CODE IS 63 UNLESS OTHERWISE NOTED. SYSTEM CODE IS TW UNLESS OTHERWISE NOTED.
3. LOCAL CONTROL DEVICES SUCH AS INDICATING LIGHTS AND SWITCHES, LOCATED IN MCC's OR AT DRIVEN EQUIPMENT MAY NOT INDICATED ON THIS P&ID.

| NO. | BY | CHK | APP |
|---|---|---|---|
| B | BLB | TAH | EVB |
| A | BLB | TAH | EVB |

| DATE | REVISIONS AND RECORD OF USE |
|---|---|
| 7/30/2019 | 60% SUBMITTAL |
| 3/5/2019 | 30% SUBMITTAL |

BLACK & VEATCH

JOINT VENTURE

FILANC

BLACK & VEATCH

CITY OF MORRO BAY
MORRO BAY WATER
RECLAMATION FACILITY (WRF)

PRODUCT WATER AREA - IPR PRODUCT WATER
PUMP STATION P&ID
IPR PUMP STATION

DESIGNED: BLB, KEZ
DETAILED: PVR
CHECKED: TAH
APPROVED:
DATE:

0 1/2 1
IF THIS BAR DOES NOT MEASURE 1" THEN DRAWING IS NOT TO FULL SCALE

PROJECT NO. 400530

63-I-001

SHEET OF

COASTAL DEVELOPMENT PERMIT PLANS

PLOTTED: 30-07-2019 12:54:10

D400530

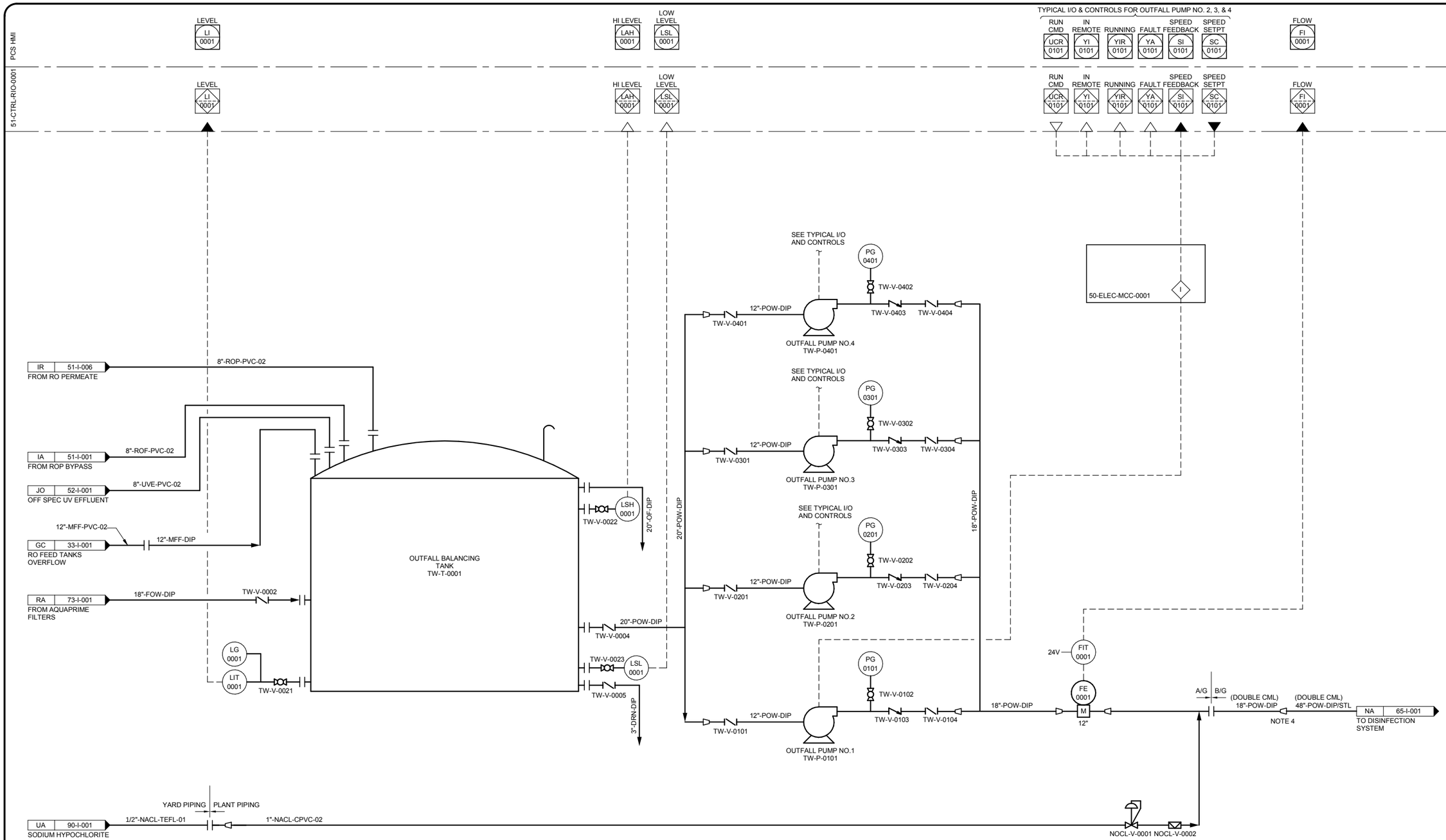


NOTES:

1. SEE LEGEND AND ABBREVIATIONS ON DRAWING 00-I-001, 00-I-002 AND 00-I-003.
2. AREA CODE IS 64 UNLESS OTHERWISE NOTED. SYSTEM CODE IS TW UNLESS OTHERWISE NOTED.
3. LOCAL CONTROL DEVICES SUCH AS INDICATING LIGHTS AND SWITCHES, LOCATED ON MCC's OR AT DRIVEN EQUIPMENT, MAY NOT BE SHOWN ON THIS P&ID.
4. OCEAN OUTFALL PIPING INCREASE TO PROVIDE VOLUME REQUIRED FOR FULL DISINFECTION PRIOR TO DECHLORINATION.

| NO. | DATE | REVISIONS AND RECORD OF USE | BY | CHK | APP |
|---|---|---|---|---|---|
| B | 7/30/2019 | 60% SUBMITTAL | BLB | TAH | EVB |
| A | 3/5/2019 | 30% SUBMITTAL | BLB | TAH | EVB |

BLACK & VEATCH
JOINT VENTURE
FILANC
BLACK & VEATCH

CITY OF MORRO BAY
MORRO BAY WATER RECLAMATION FACILITY (WRF)

PRODUCT WATER AREA - OUTFALL PUMP STATION
P&ID
OUTFALL TANK & PUMPS

DESIGNED: BLB, KEZ
DETAILED: PVR
CHECKED: TAH
APPROVED:
DATE:

0 1/2 1
IF THIS BAR DOES NOT MEASURE 1" THEN DRAWING IS NOT TO FULL SCALE

PROJECT NO. 400530

64-I-001
SHEET OF

COASTAL DEVELOPMENT PERMIT PLANS

PLOTTED: 30-07-2019 12:54:10
D400530

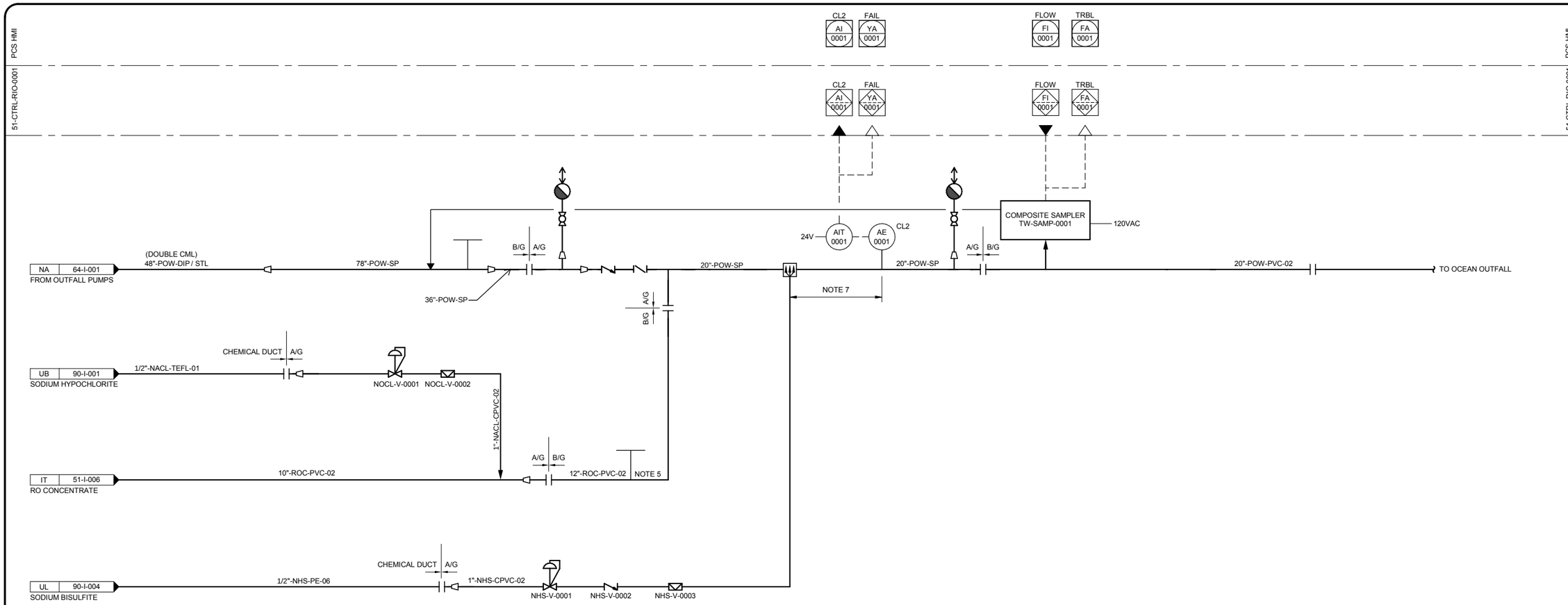


NOTES:

1. SEE LEGEND AND ABBREVIATIONS ON DRAWING 00-I-001, 00-I-002 AND 00-I-003.
2. AREA CODE IS 65 UNLESS OTHERWISE NOTED. SYSTEM CODE IS TW UNLESS OTHERWISE NOTED.
3. LOCAL CONTROL DEVICES SUCH AS INDICATING LIGHTS AND SWITCHES, LOCATED ON MCC's OR AT DRIVEN EQUIPMENT, MAY NOT BE SHOWN ON THIS P&ID.
4. OCEAN OUTFALL PIPING TO BE 16" UPHILL TO PROVIDE SUFFICIENT VELOCITY TO SCOUR OFF SOLIDS. WHEN DOWNHILL, PIPE TO INCREASE TO 48" TO PROVIDE VOLUME REQUIRED FOR FULL DISINFECTION PRIOR TO DECHLORINATION.
5. SITE PIPING TO HAVE MINIMUM VOLUME OF 110,000 GALLONS TO ENSURE PROPER DISINFECTION PRIOR TO OUTFALL.
6. SITE PIPING TO HAVE MINIMUM VOLUME OF 3,000 GALLONS TO ENSURE PROPER DISINFECTION PRIOR TO OUTFALL.
7. SEPARATION DISTANCE BETWEEN BISULFITE INJECTION AND CHLORINE MEASUREMENT TO BE VERIFIED ASSUME 20'.

COASTAL DEVELOPMENT PERMIT PLANS

| NO. | DATE | REVISIONS AND RECORD OF USE | BY | CHK | APP |
|---|---|---|---|---|---|
| B | 7/30/2019 | 60% SUBMITTAL | BLB | TAH | EVB |
| A | 3/5/2019 | 30% SUBMITTAL | BLB | TAH | EVB |

BLACK & VEATCH
JOINT VENTURE
FILANC
BLACK & VEATCH

CITY OF MORRO BAY
MORRO BAY WATER
RECLAMATION FACILITY (WRF)

PRODUCT WATER AREA - TSINFECTION SYSTEM
P&ID
OUTFALL DISINFECTION SYSTEM

DESIGNED: BLB, KEZ
DETAILED: PVR
CHECKED: TAH
APPROVED:
DATE:

0 1/2 1
IF THIS BAR DOES NOT MEASURE 1" THEN DRAWING IS NOT TO FULL SCALE

PROJECT NO.
400530

65-I-001
SHEET
OF

PLOTTED: 30-07-2019 12:54:10
D400530

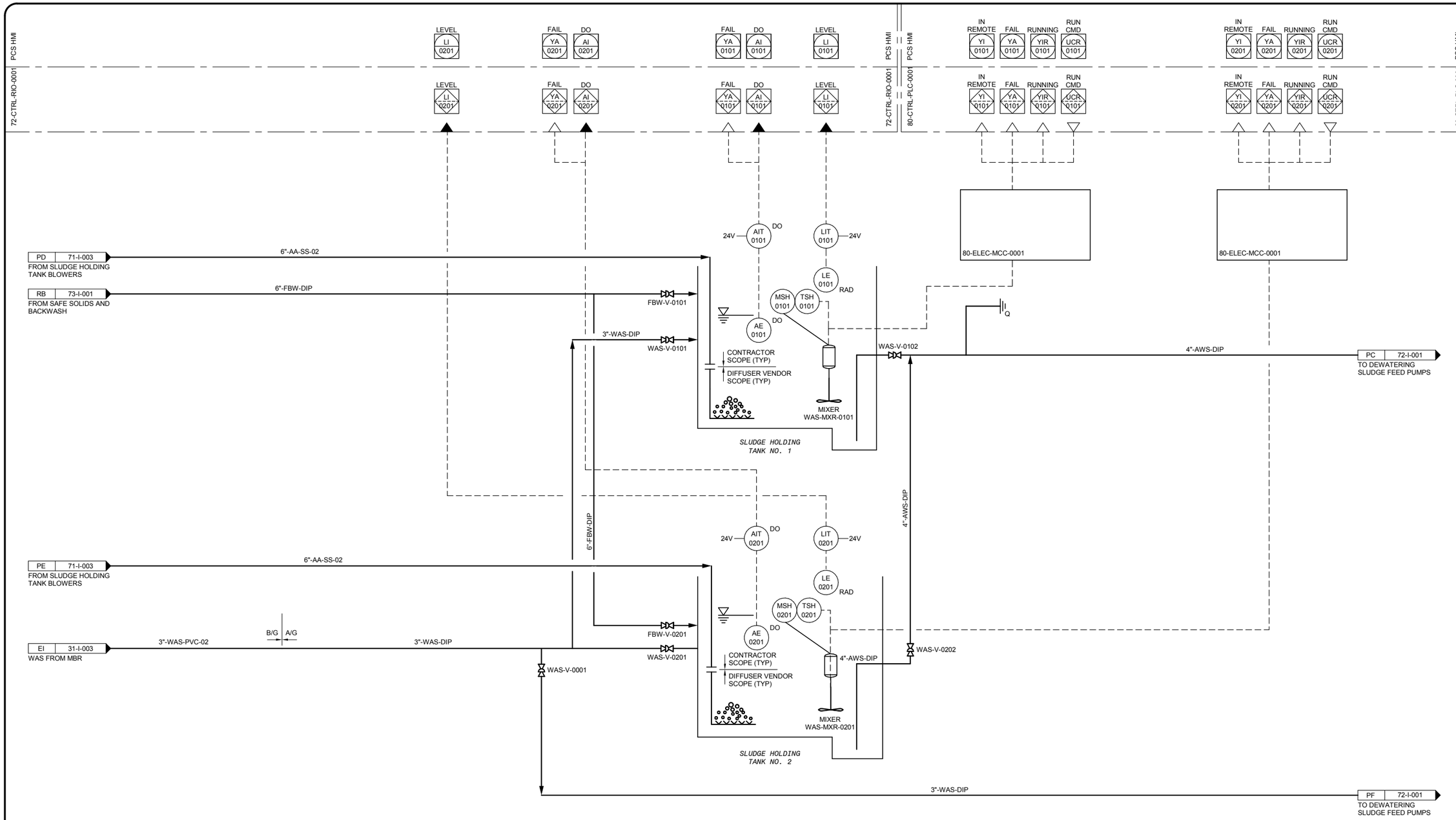


NOTES:
1. SEE LEGEND ON DRAWINGS 00-I-001, 00-I-002 AND 00-I-003.
2. AREA CODE IS 71 UNLESS OTHERWISE NOTED. SYSTEM CODE IS WAS UNLESS OTHERWISE INDICATED.
3. LOCAL CONTROL DEVICES SUCH AS INDICATING LIGHTS AND SWITCHES, LOCATED ON MCC'S OR AT DRIVEN EQUIPMENT, MAY NOT BE SHOWN ON THIS P&ID.

# COASTAL DEVELOPMENT PERMIT PLANS

| NO. | BY | CHK | APP |
|---|---|---|---|
| B | BLB | TAH | EVB |
| A | BLB | TAH | EVB |

REVISIONS AND RECORD OF USE

| DATE | |
|---|---|
| 7/30/2019 | 60% SUBMITTAL |
| 3/5/2019 | 30% SUBMITTAL |

BLACK & VEATCH
JOINT VENTURE
FILANC
BLACK & VEATCH

CITY OF MORRO BAY
MORRO BAY WATER RECLAMATION FACILITY (WRF)

RESIDUALS AREA - SLUDGE & SAFE SETTLE TANKS
P&ID
SLUDGE HOLDING TANKS

DESIGNED: BLB, KEZ
DETAILED: PVR
CHECKED: TAH
APPROVED:
DATE:

0 1/2 1
IF THIS BAR DOES NOT MEASURE 1" THEN DRAWING IS NOT TO FULL SCALE

PROJECT NO. 400530

71-I-001
SHEET OF

PLOTTED: 30-07-2019 11:11:17
D400530

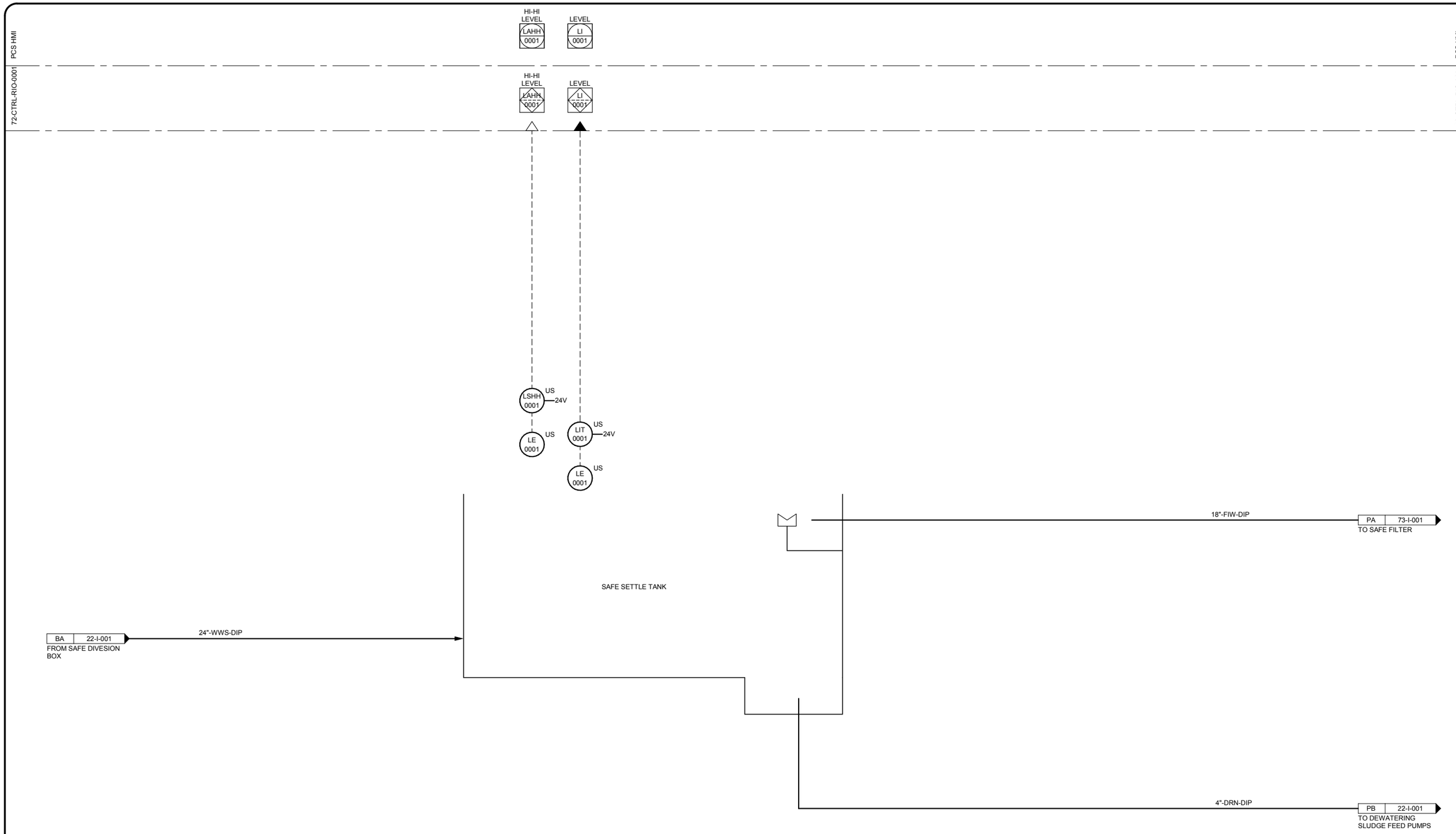


NOTES:
1. SEE LEGEND ON DRAWINGS 00-I-001, 00-I-002 AND 00-I-003.
2. AREA CODE IS 71 UNLESS OTHERWISE NOTED. SYSTEM CODE IS WAS UNLESS OTHERWISE INDICATED.
3. LOCAL CONTROL DEVICES SUCH AS INDICATING LIGHTS AND SWITCHES, LOCATED ON MCC'S OR AT DRIVEN EQUIPMENT, MAY NOT BE SHOWN ON THIS P&ID.

COASTAL DEVELOPMENT PERMIT PLANS

| DATE | REVISIONS AND RECORD OF USE | NO. | BY | CHK | APP |
|---|---|---|---|---|---|
| 7/30/2019 | 60% SUBMITTAL | B | BLB | TAH | EVB |
| 3/5/2019 | 30% SUBMITTAL | A | BLB | TAH | EVB |

BLACK & VEATCH

JOINT VENTURE

FILANC

BLACK & VEATCH

CITY OF MORRO BAY
MORRO BAY WATER
RECLAMATION FACILITY (WRF)

RESIDUALS AREA - SLUDGE & SAFE SETTLE TANKS
P&ID
SAFE SETTLE SYSTEM

DESIGNED: BLB, KEZ
DETAILED: PVR
CHECKED: TAH
APPROVED:
DATE:

0 1/2 1
IF THIS BAR DOES NOT MEASURE 1" THEN DRAWING IS NOT TO FULL SCALE

PROJECT NO. 400530

71-I-002

SHEET OF

PLOTTED: 30-07-2019 11:11:17

D400530

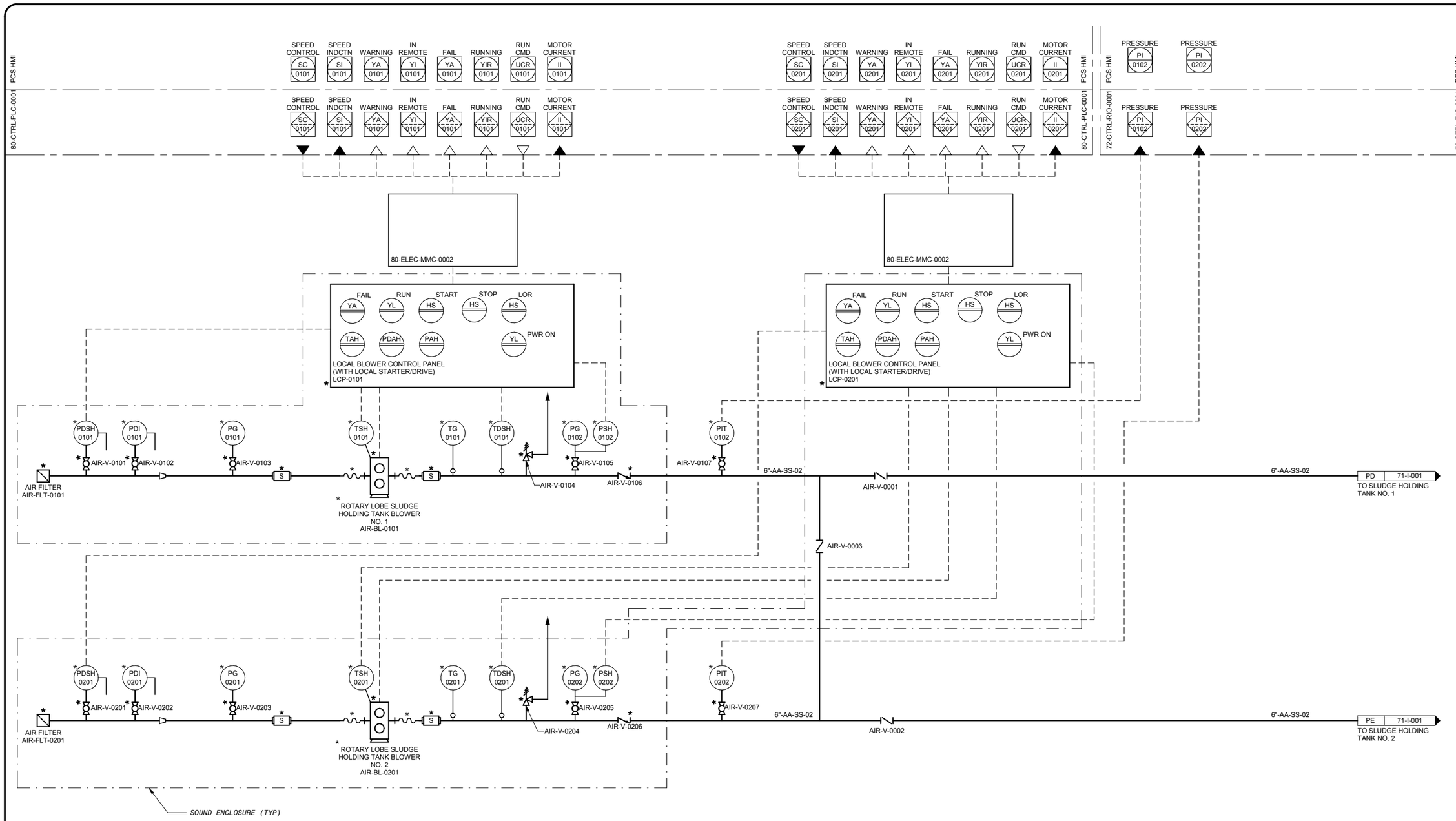


NOTES:
1. SEE LEGEND ON DRAWINGS 00-I-001, 00-I-002 AND 00-I-003.
2. AREA CODE IS 71 UNLESS OTHERWISE NOTED. SYSTEM CODE IS AIR UNLESS OTHERWISE INDICATED.
3. LOCAL CONTROL DEVICES SUCH AS INDICATING LIGHTS AND SWITCHES, LOCATED ON MCC'S OR AT DRIVEN EQUIPMENT, MAY NOT BE SHOWN ON THIS P&ID.

COASTAL DEVELOPMENT PERMIT PLANS

| NO. | BY | CHK | APP |
|---|---|---|---|
| B | BLB | TAH | EVB |
| A | BLB | TAH | EVB |

REVISIONS AND RECORD OF USE

| DATE | |
|---|---|
| 7/30/2019 | 60% SUBMITTAL |
| 3/5/2019 | 30% SUBMITTAL |

BLACK & VEATCH
JOINT VENTURE
FILANC
BLACK & VEATCH

CITY OF MORRO BAY
MORRO BAY WATER RECLAMATION FACILITY (WRF)

RESIDUALS AREA - SLUDGE & SAFE SETTLE TANKS
P&ID
SLUDGE HOLDING TANK BLOWERS

DESIGNED: BLB, KEZ
DETAILED: PVR
CHECKED: TAH
APPROVED:
DATE:

0 1/2 1
IF THIS BAR DOES NOT MEASURE 1" THEN DRAWING IS NOT TO FULL SCALE

PROJECT NO. 400530

71-I-003
SHEET OF

PLOTTED: 30-07-2019 11:11:19
D400530

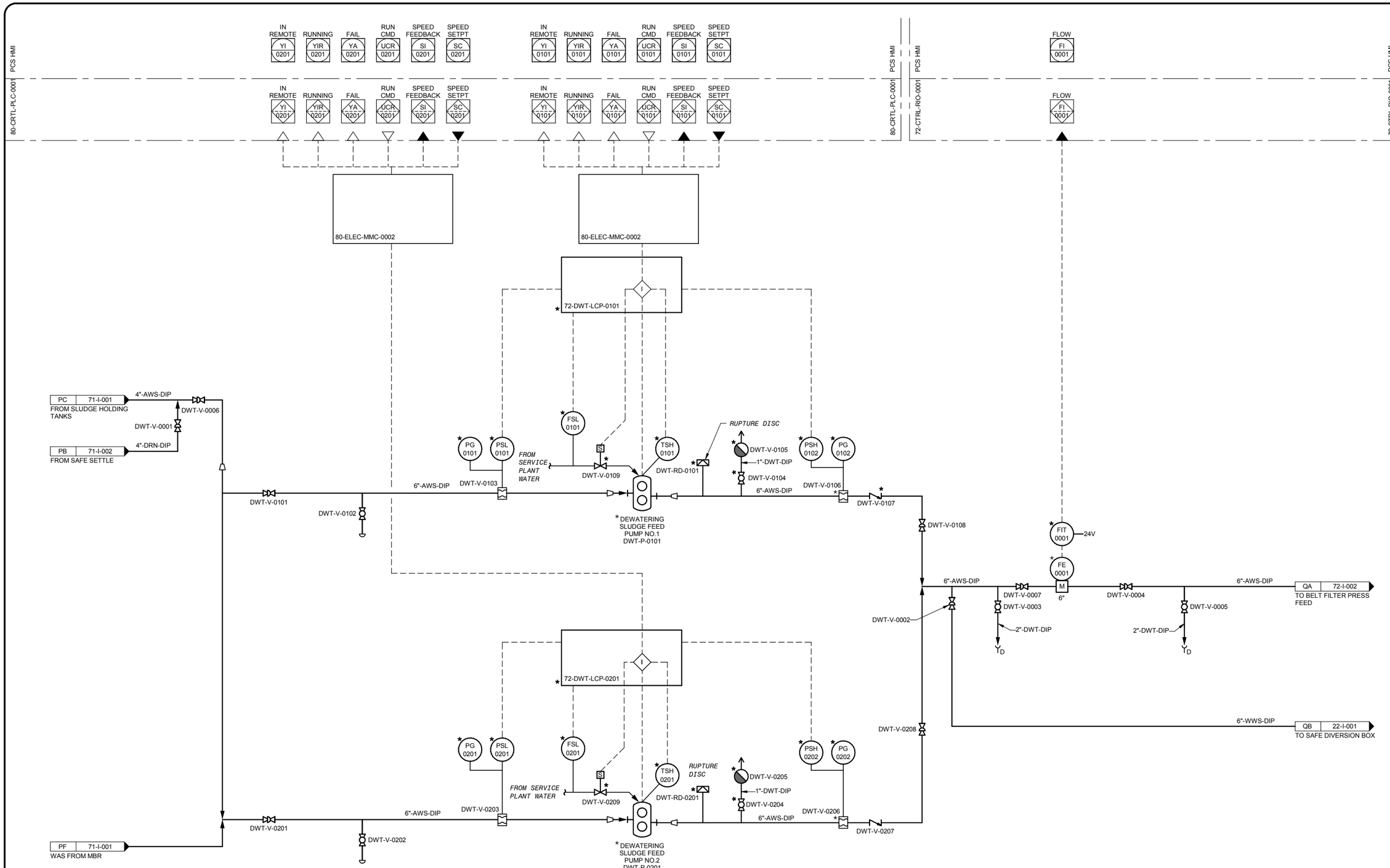


NOTES:
1. SEE LEGEND ON DRAWINGS 00-I-001, 00-I-002 AND 00-I-003.
2. AREA CODE IS 72 UNLESS OTHERWISE NOTED. SYSTEM CODE IS DWT UNLESS OTHERWISE INDICATED.
3. LOCAL CONTROL DEVICES SUCH AS INDICATING LIGHTS AND SWITCHES, LOCATED ON MCC'S OR AT DRIVEN EQUIPMENT, MAY NOT BE SHOWN ON THIS P&ID.

* ITEM FURNISHED BY DEWATERING SYSTEM SUPPLIER

COASTAL DEVELOPMENT PERMIT PLANS

| NO. | BY | CHK | APP |
|---|---|---|---|
| B | BLB | TAH | EVB |
| A | BLB | TAH | EVB |

REVISIONS AND RECORD OF USE

| DATE | |
|---|---|
| 7/30/2019 | 60% SUBMITTAL |
| 3/5/2019 | 30% SUBMITTAL |

BLACK & VEATCH
JOINT VENTURE
FILANC
BLACK & VEATCH

CITY OF MORRO BAY
MORRO BAY WATER
RECLAMATION FACILITY (WRF)

RESIDUALS AREA - DEWATERING SYSTEM
P&ID
DEWATERING SLUDGE FEED PUMPS

DESIGNED: BLB, KEZ
DETAILED: PVR
CHECKED: TAH
APPROVED:
DATE:

0 1/2 1
IF THIS BAR DOES NOT MEASURE 1" THEN DRAWING IS NOT TO FULL SCALE

PROJECT NO.
400530

72-I-001
SHEET
OF

PLOTTED: 30-07-2019 11:11:19
D400530

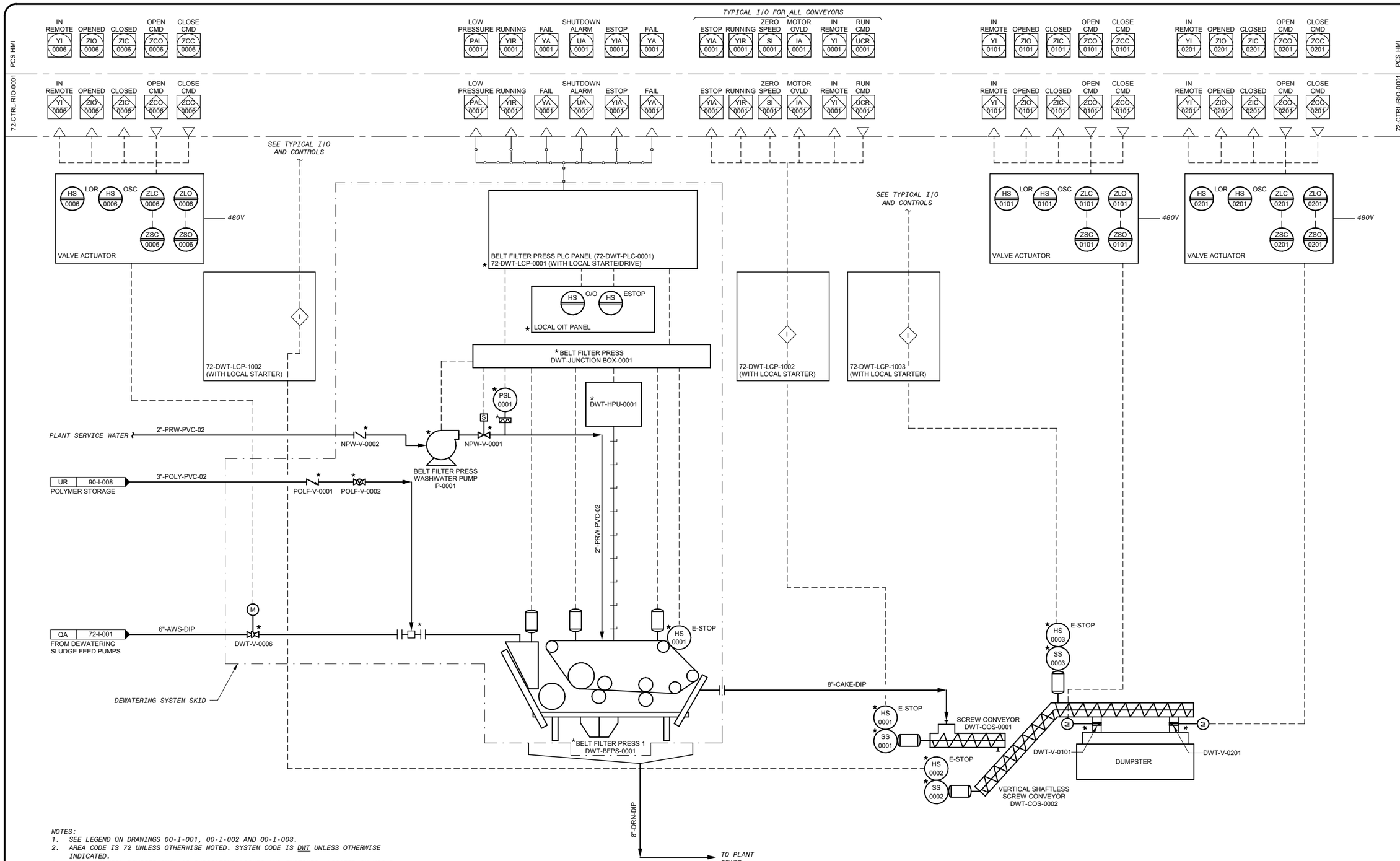


NOTES:
1. SEE LEGEND ON DRAWINGS 00-I-001, 00-I-002 AND 00-I-003.
2. AREA CODE IS 72 UNLESS OTHERWISE NOTED. SYSTEM CODE IS DWT UNLESS OTHERWISE INDICATED.
3. LOCAL CONTROL DEVICES SUCH AS INDICATING LIGHTS AND SWITCHES, LOCATED ON MCC'S OR AT DRIVEN EQUIPMENT, MAY NOT BE SHOWN ON THIS P&ID.
4. BELT FILTER PRESS PACKAGE PLANT I/O MAY VARY BASE ON FINAL VENDOR DESIGN.

* ITEM FURNISHED BY DEWATERING SYSTEM SUPPLIER

| NO. | BY | CHK | APP |
|---|---|---|---|
| B | BLB | TAH | EVB |
| A | BLB | TAH | EVB |

REVISIONS AND RECORD OF USE

| DATE | |
|---|---|
| 7/30/2019 | 60% SUBMITTAL |
| 3/5/2019 | 30% SUBMITTAL |

BLACK & VEATCH
JOINT VENTURE
FILANC
BLACK & VEATCH

CITY OF MORRO BAY
MORRO BAY WATER
RECLAMATION FACILITY (WRF)

RESIDUALS AREA - DEWATERING SYSTEM
P&ID
BELT FILTER PRESS

DESIGNED: BLB, KEZ
DETAILED: PVR
CHECKED: TAH
APPROVED:
DATE:

0 1/2 1
IF THIS BAR DOES NOT MEASURE 1" THEN DRAWING IS NOT TO FULL SCALE

PROJECT NO. 400530

72-I-002
SHEET OF

COASTAL DEVELOPMENT PERMIT PLANS

PLOTTED: 30-07-2019 11:11:20
D400530

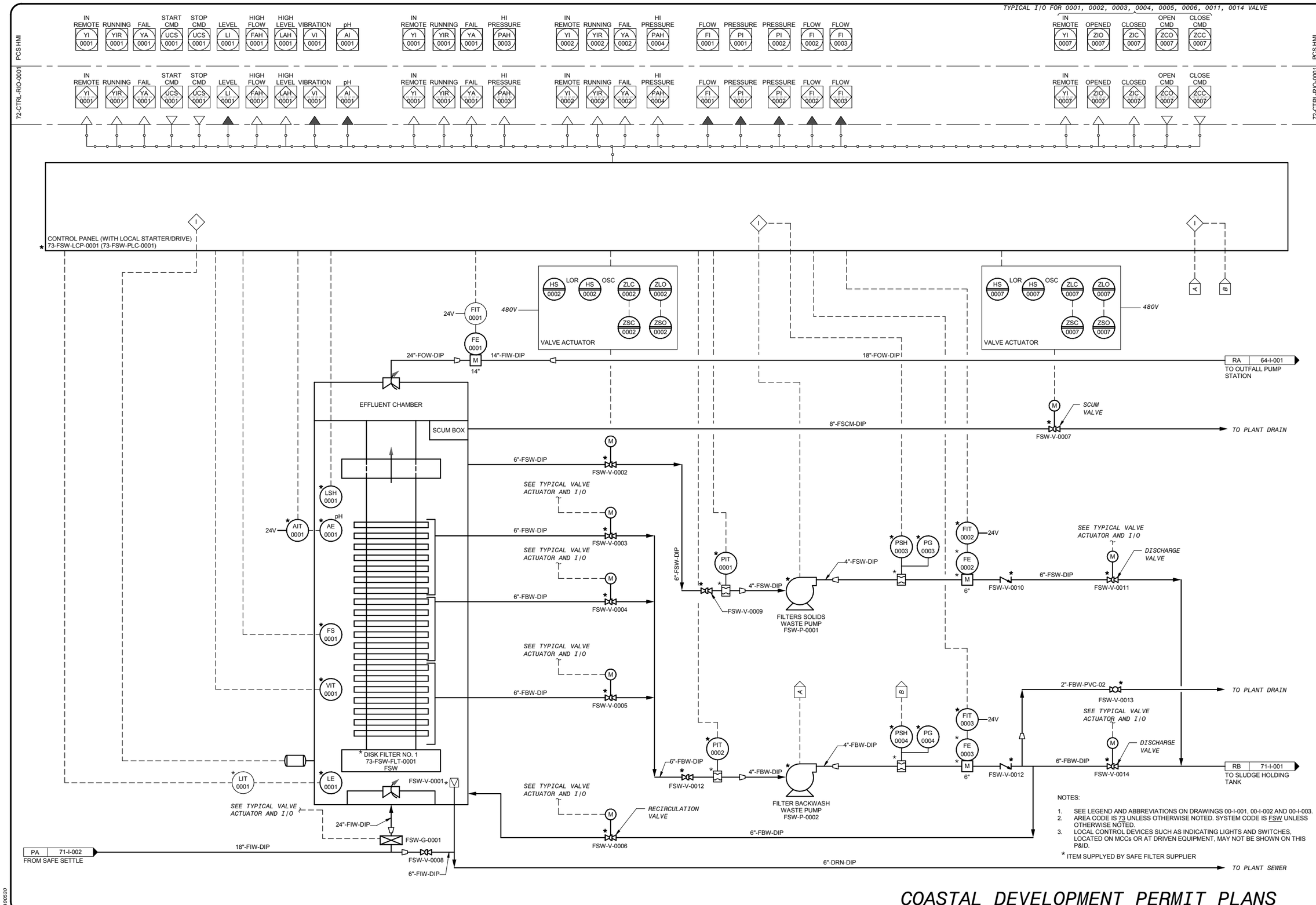


| NO. | BY | CHK | APP |
|---|---|---|---|
| B | BLB | TAH | EVB |
| A | BLB | TAH | EVB |

REVISIONS AND RECORD OF USE

| DATE | |
|---|---|
| 7/30/2019 | 60% SUBMITTAL |
| 3/5/2019 | 30% SUBMITTAL |

BLACK & VEATCH
JOINT VENTURE
FILANC
BLACK & VEATCH

CITY OF MORRO BAY
MORRO BAY WATER
RECLAMATION FACILITY (WRF)

RESIDUALS AREA - SAFE FILTER SYSTEM
P&ID
SAFE SYSTEM

DESIGNED: BLB, KEZ
DETAILED: PVR
CHECKED: TAH
APPROVED:
DATE:

0 1/2 1
IF THIS BAR DOES NOT MEASURE 1" THEN DRAWING IS NOT TO FULL SCALE

PROJECT NO.
400530

73-I-001
SHEET
OF

PLOTTED: 30-07-2019 11:11:20
D400530

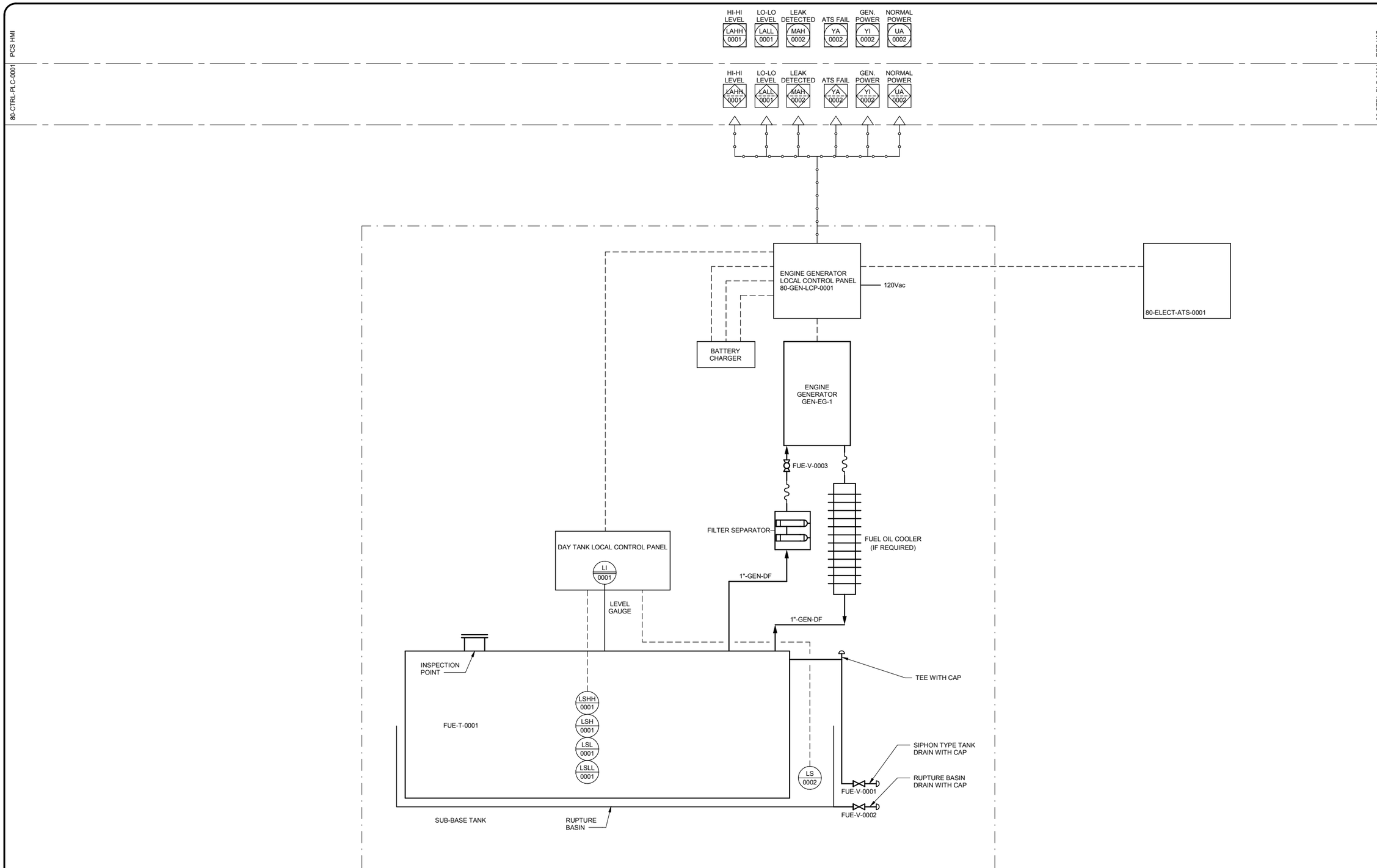


NOTES:

1. SEE LEGEND AND ABBREVIATIONS ON DRAWING 00-I-001, 00-I-002 AND 00-I-003.
2. AREA CODE IS 81 UNLESS OTHERWISE NOTED. SYSTEM CODE IS FUE UNLESS OTHERWISE NOTED.
3. LOCAL CONTROL DEVICES SUCH AS INDICATING LIGHTS AND SWITCHES, LOCATED IN MCC's OR AT DRIVEN EQUIPMENT MAY NOT INDICATED ON THIS P&ID.

COASTAL DEVELOPMENT PERMIT PLANS

| NO. | BY | CHK | APP |
|---|---|---|---|
| A | BLB | TAH | EVB |

60% SUBMITTAL
REVISIONS AND RECORD OF USE
DATE 7/30/2019

JOINT VENTURE
FILANC BLACK & VEATCH

CITY OF MORRO BAY
FILANC BLACK & VEATCH DB PROPOSAL
RECLAMATION FACILITY (WRF)

MISCELLANEOUS - GENERATOR
P&ID
GENERATOR SYSTEM

DESIGNED: BLB
DETAILED: PVR
CHECKED: TAH
APPROVED:
DATE:

0 1/2 1
IF THIS BAR DOES NOT MEASURE 1" THEN DRAWING IS NOT TO FULL SCALE

PROJECT NO. 400530

81-I-001
SHEET
OF

PLOTTED: 30-07-2019 15:10:39
D400530

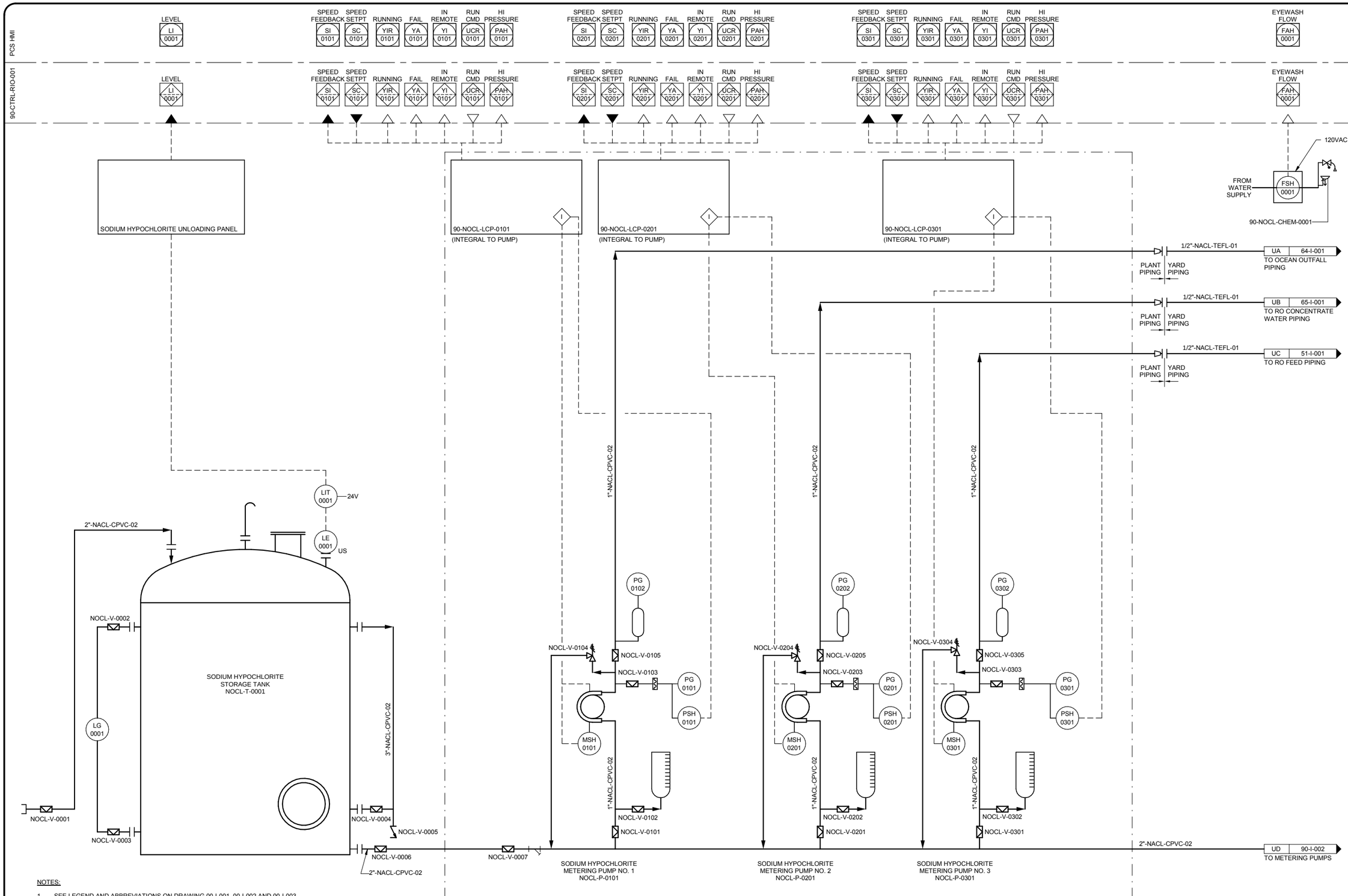


NOTES:

1. SEE LEGEND AND ABBREVIATIONS ON DRAWING 00-I-001, 00-I-002 AND 00-I-003.
2. AREA CODE IS 90 UNLESS OTHERWISE NOTED. SYSTEM CODE IS NOCL UNLESS OTHERWISE NOTED.
3. LOCAL CONTROL DEVICES SUCH AS INDICATING LIGHTS AND SWITCHES, LOCATED IN MCC's OR AT DRIVEN EQUIPMENT MAY NOT INDICATED ON THIS P&ID.

| NO. | DATE | REVISIONS AND RECORD OF USE | BY | CHK | APP |
|---|---|---|---|---|---|
| B | 7/30/2019 | 60% SUBMITTAL | BLB | TAH | EVB |
| A | 3/5/2019 | 30% SUBMITTAL | BLB | TAH | EVB |

BLACK & VEATCH
JOINT VENTURE
FILANC
BLACK & VEATCH

CITY OF MORRO BAY
MORRO BAY WATER RECLAMATION FACILITY (WRF)
CHEMICALS - CHEMICAL FACILITY
P&ID
SODIUM HYPOCHLORITE STORAGE & FEED 1

DESIGNED: BLB, ADV
DETAILED: PVR
CHECKED: TAH
APPROVED:
DATE:

0 1/2 1
IF THIS BAR DOES NOT MEASURE 1" THEN DRAWING IS NOT TO FULL SCALE

PROJECT NO. 400530

90-I-001
SHEET OF

COASTAL DEVELOPMENT PERMIT PLANS

PLOTTED: 30-07-2019 15:23:57
D400530

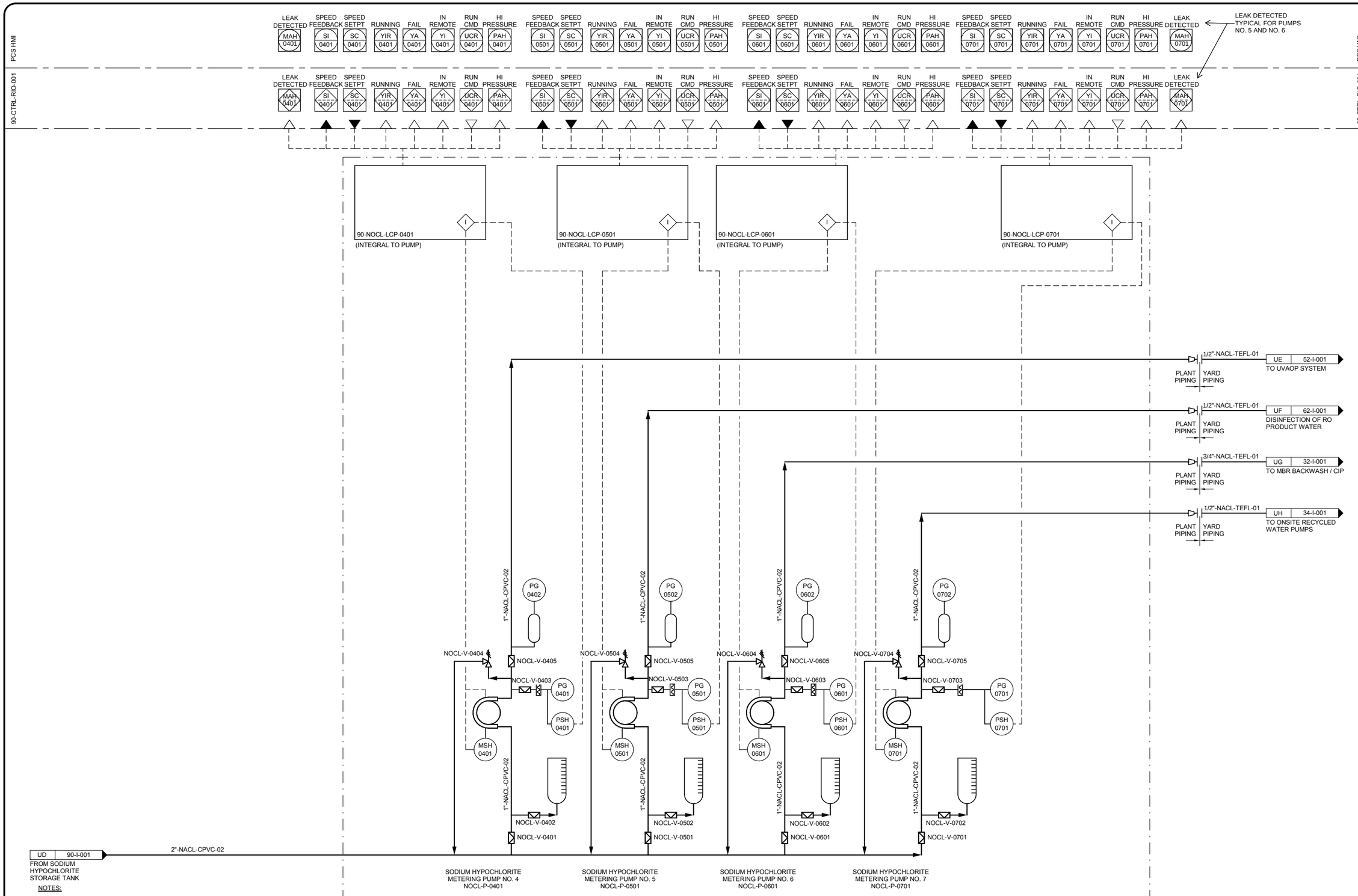


NOTES:

1. SEE LEGEND AND ABBREVIATIONS ON DRAWING 00-I-001, 00-I-002 AND 00-I-003.
2. AREA CODE IS 90 UNLESS OTHERWISE NOTED. SYSTEM CODE IS NOCL UNLESS OTHERWISE NOTED.
3. LOCAL CONTROL DEVICES SUCH AS INDICATING LIGHTS AND SWITCHES, LOCATED IN MCC's OR AT DRIVEN EQUIPMENT MAY NOT INDICATED ON THIS P&ID.

COASTAL DEVELOPMENT PERMIT PLANS

| NO. | BY | CHK | APP |
|---|---|---|---|
| B | BLB | TAH | EVB |
| A | BLB | TAH | EVB |

| DATE | REVISIONS AND RECORD OF USE |
|---|---|
| 7/30/2019 | 60% SUBMITTAL |
| 3/5/2019 | 30% SUBMITTAL |

BLACK & VEATCH

JOINT VENTURE

FILANC

BLACK & VEATCH

CITY OF MORRO BAY
MORRO BAY WATER RECLAMATION FACILITY (WRF)

CHEMICALS - CHEMICAL FACILITY
P&ID
SODIUM HYPOCHLORITE STORAGE & FEED 2

DESIGNED: BLB, ADV
DETAILED: PVR
CHECKED: TAH
APPROVED:
DATE:

0 1/2 1
IF THIS BAR DOES NOT MEASURE 1" THEN DRAWING IS NOT TO FULL SCALE

PROJECT NO. 400530

90-I-002
SHEET OF

PLOTTED: 30-07-2019 15:23:58
D400530

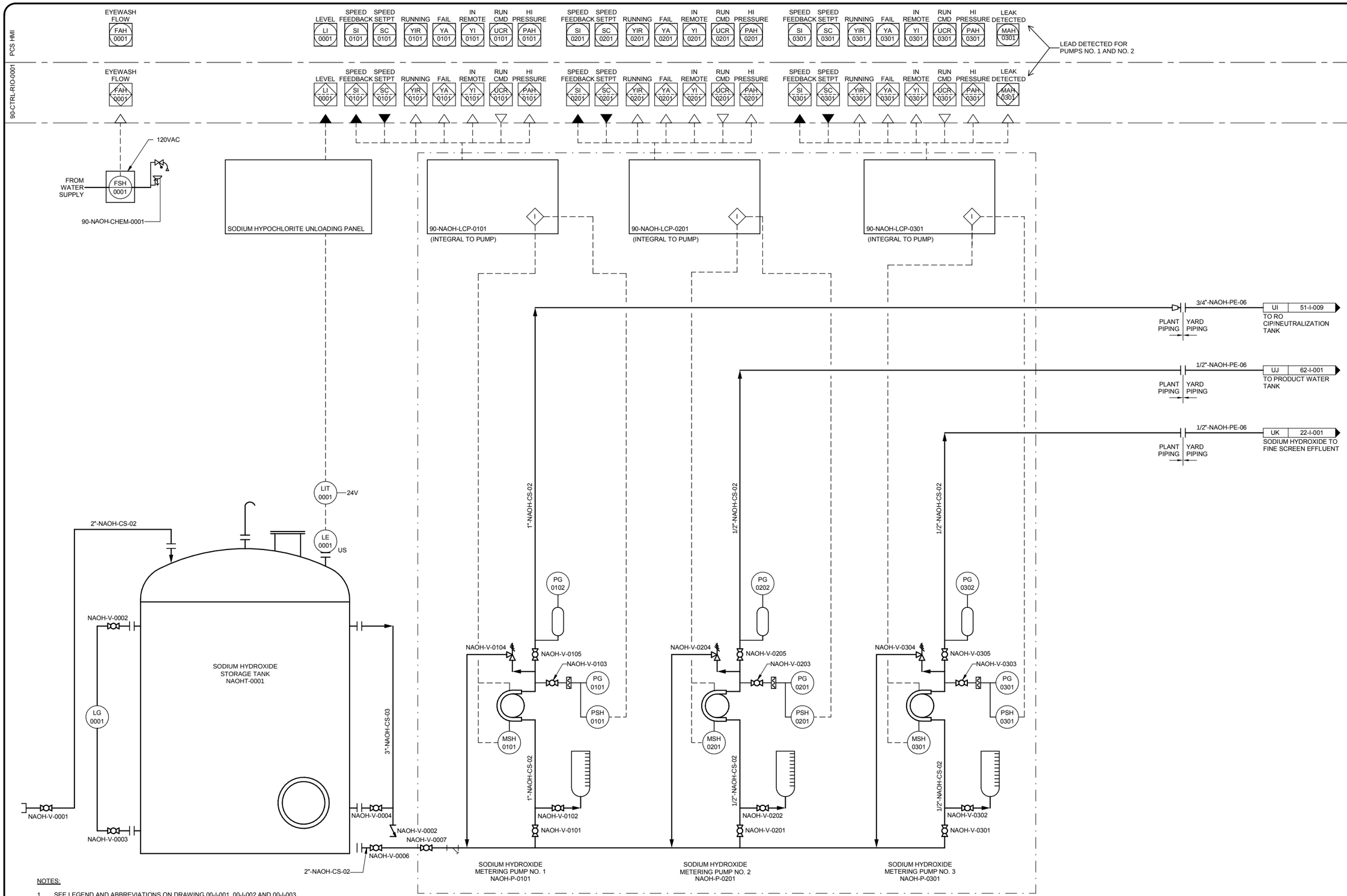


NOTES:

1. SEE LEGEND AND ABBREVIATIONS ON DRAWING 00-I-001, 00-I-002 AND 00-I-003.
2. AREA CODE IS 90 UNLESS OTHERWISE NOTED. SYSTEM CODE IS NAOH UNLESS OTHERWISE NOTED.
3. LOCAL CONTROL DEVICES SUCH AS INDICATING LIGHTS AND SWITCHES, LOCATED IN MCC's OR AT DRIVEN EQUIPMENT MAY NOT INDICATED ON THIS P&ID.

| NO. | DATE | REVISIONS AND RECORD OF USE | BY | CHK | APP |
|---|---|---|---|---|---|
| B | 7/30/2019 | 60% SUBMITTAL | BLB | TAH | EVB |
| A | 3/5/2019 | 30% SUBMITTAL | BLB | TAH | EVB |

BLACK & VEATCH

JOINT VENTURE

FILANC

BLACK & VEATCH

CITY OF MORRO BAY
MORRO BAY WATER
RECLAMATION FACILITY (WRF)

CHEMICALS - CHEMICAL FACILITY
P&ID
SODIUM HYDROXIDE STORAGE & FEED

DESIGNED: BLB, ADV
DETAILED: PVR
CHECKED: TAH
APPROVED:
DATE:

0 1/2 1
IF THIS BAR DOES NOT MEASURE 1" THEN DRAWING IS NOT TO FULL SCALE

PROJECT NO. 400530

90-I-003
SHEET
OF

COASTAL DEVELOPMENT PERMIT PLANS

PLOTTED: 30-07-2019 15:23:59
D400530

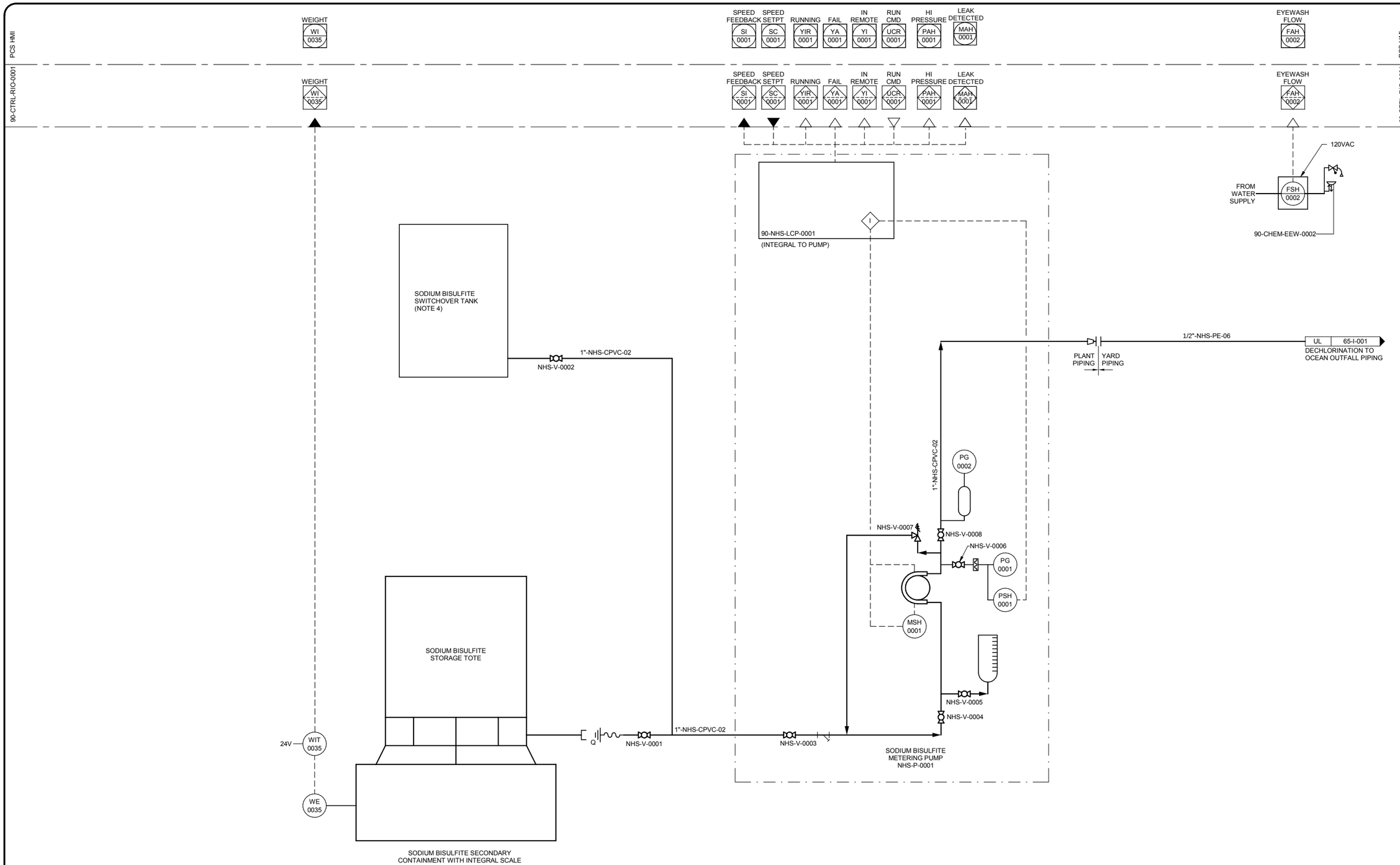


NOTES:

1. SEE LEGEND AND ABBREVIATIONS ON DRAWING 00-I-001, 00-I-002 AND 00-I-003.
2. AREA CODE IS 90 UNLESS OTHERWISE NOTED. SYSTEM CODE IS NHS UNLESS OTHERWISE NOTED.
3. LOCAL CONTROL DEVICES SUCH AS INDICATING LIGHTS AND SWITCHES, LOCATED ON MCC's OR AT DRIVEN EQUIPMENT, MAY NOT BE SHOWN ON THIS P&ID.
4. SWITCHOVER TANK PROVIDED IN THE EVENT THE TOTE NEEDS TO BE CHANGED OUT AND NHS FEED CANNOT BE STOPPED. THIS TANK CAN BE MANUALLY FILLED VIA GRAVITY FROM THE TOTE AND SHOULD BE DRAINED COMPLETELY BEFORE SWITCHING BACK TO THE NEW TOTE.

COASTAL DEVELOPMENT PERMIT PLANS

| NO. | BY | CHK | APP | DATE | REVISIONS AND RECORD OF USE |
|---|---|---|---|---|---|
| B | BLB | TAH | EVB | 7/30/2019 | 60% SUBMITTAL |
| A | BLB | TAH | EVB | 3/5/2019 | 30% SUBMITTAL |

BLACK & VEATCH
JOINT VENTURE
FILANC
BLACK & VEATCH

CITY OF MORRO BAY
MORRO BAY WATER RECLAMATION FACILITY (WRF)

CHEMICALS - CHEMICAL FACILITY P&ID
SODIUM BISULFITE STORAGE & FEED

DESIGNED: BLB, ADV
DETAILED: PVR
CHECKED: TAH
APPROVED:
DATE:

0 1/2 1
IF THIS BAR DOES NOT MEASURE 1" THEN DRAWING IS NOT TO FULL SCALE

PROJECT NO. 400530

90-I-004
SHEET OF

PLOTTED: 30-07-2019 15:24:00
D400530

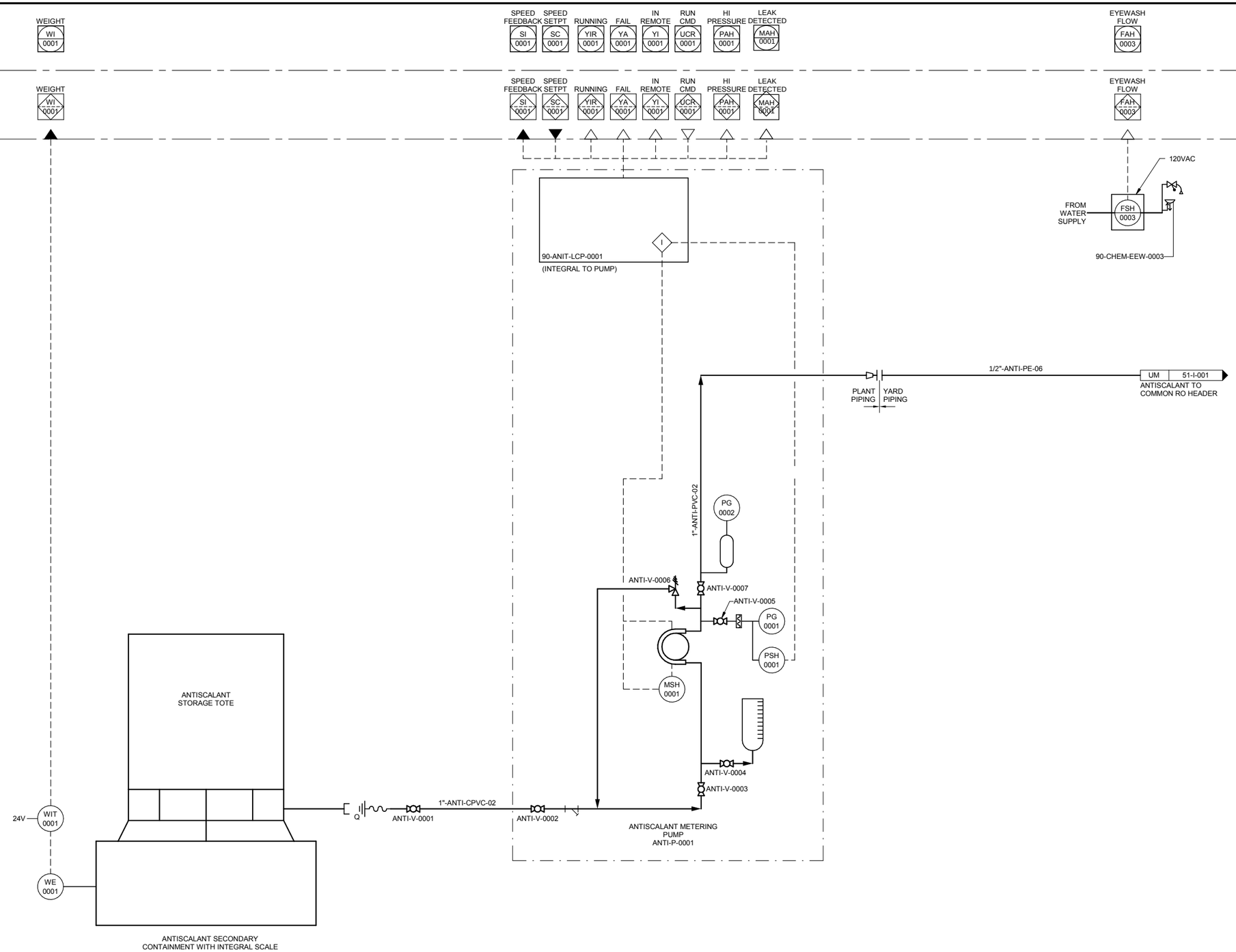


NOTES:

1. SEE LEGEND AND ABBREVIATIONS ON DRAWING 00-I-001, 00-I-002 AND 00-I-003.
2. AREA CODE IS 90 UNLESS OTHERWISE NOTED. SYSTEM CODE IS ANTI UNLESS OTHERWISE NOTED.
3. LOCAL CONTROL DEVICES SUCH AS INDICATING LIGHTS AND SWITCHES, LOCATED ON MCC's OR AT DRIVEN EQUIPMENT, MAY NOT BE SHOWN ON THIS P&ID.

| NO. | BY | CHK | APP | DATE | REVISIONS AND RECORD OF USE |
|---|---|---|---|---|---|
| B | BLB | TAH | EVB | 7/30/2019 | 60% SUBMITTAL |
| A | BLB | TAH | EVB | 3/5/2019 | 30% SUBMITTAL |

BLACK & VEATCH
JOINT VENTURE
FILANC
BLACK & VEATCH

CITY OF MORRO BAY
MORRO BAY WATER
RECLAMATION FACILITY (WRF)

CHEMICALS - CHEMICAL FACILITY
P&ID
ANTISCALANT STORAGE & FEED

DESIGNED: BLB, ADV
DETAILED: PVR
CHECKED: TAH
APPROVED:
DATE:

0 1/2 1
IF THIS BAR DOES NOT MEASURE 1" THEN DRAWING IS NOT TO FULL SCALE

PROJECT NO.
400530

90-I-005
SHEET
OF

COASTAL DEVELOPMENT PERMIT PLANS

PLOTTED: 30-07-2019 15:24:00
D400530

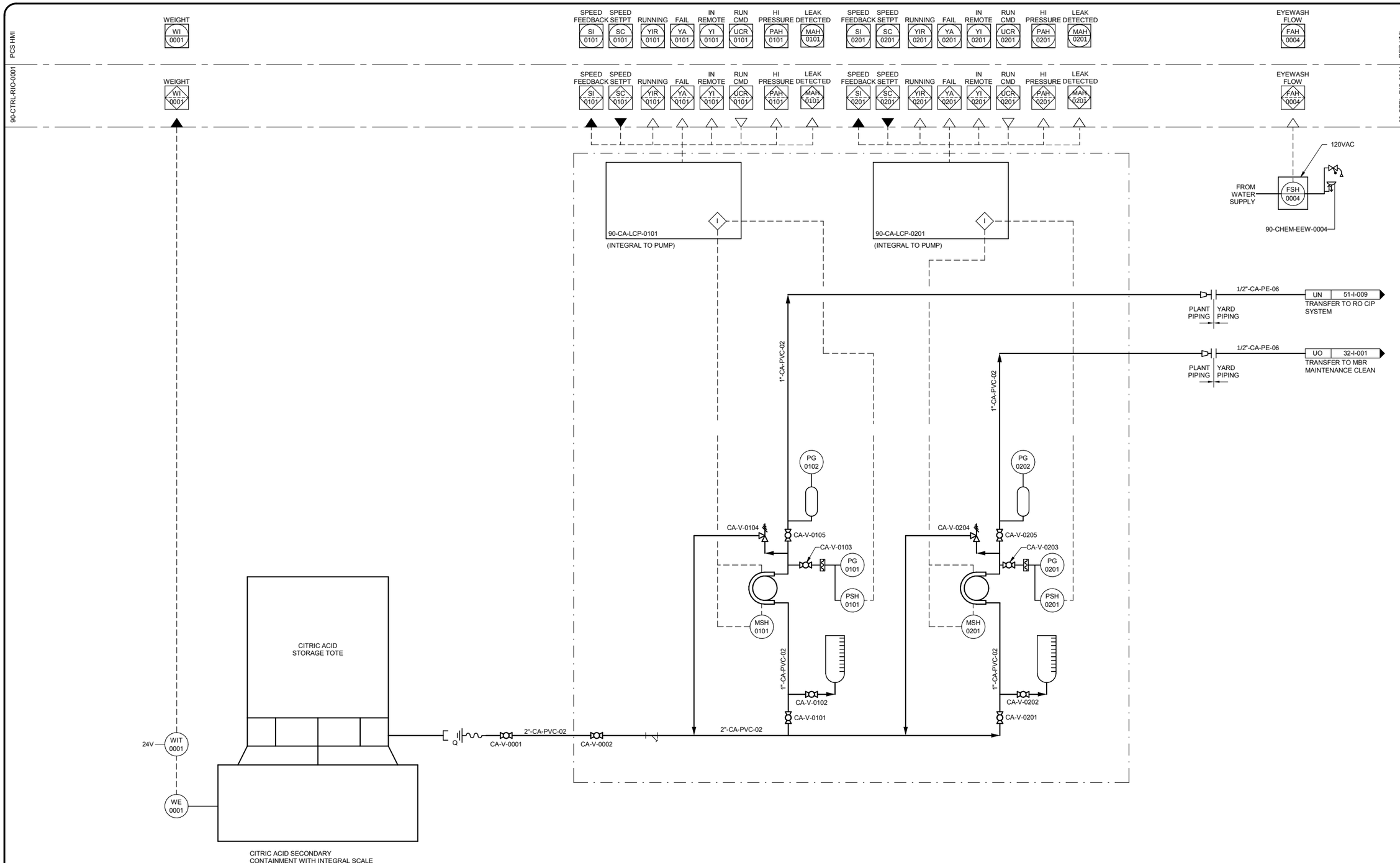


NOTES:

1. SEE LEGEND AND ABBREVIATIONS ON DRAWING 00-I-001, 00-I-002 AND 00-I-003.
2. AREA CODE IS 90 UNLESS OTHERWISE NOTED. SYSTEM CODE IS CA UNLESS OTHERWISE NOTED.
3. LOCAL CONTROL DEVICES SUCH AS INDICATING LIGHTS AND SWITCHES, LOCATED ON MCC's OR AT DRIVEN EQUIPMENT, MAY NOT BE SHOWN ON THIS P&ID.

COASTAL DEVELOPMENT PERMIT PLANS

| NO. | BY | CHK | APP | DATE | REVISIONS AND RECORD OF USE |
|---|---|---|---|---|---|
| B | BLB | TAH | EVB | 7/30/2019 | 60% SUBMITTAL |
| A | BLB | TAH | EVB | 3/5/2019 | 30% SUBMITTAL |

BLACK & VEATCH
JOINT VENTURE
FILANC
BLACK & VEATCH

CITY OF MORRO BAY
MORRO BAY WATER RECLAMATION FACILITY (WRF)

CHEMICALS - CHEMICAL FACILITY P&ID
CITRIC ACID STORAGE & FEED

DESIGNED: BLB, ADV
DETAILED: PVR
CHECKED: TAH
APPROVED:
DATE:

0 1/2 1
IF THIS BAR DOES NOT MEASURE 1" THEN DRAWING IS NOT TO FULL SCALE

PROJECT NO. 400530

90-I-006
SHEET OF

PLOTTED: 30-07-2019 15:24:01
D400530

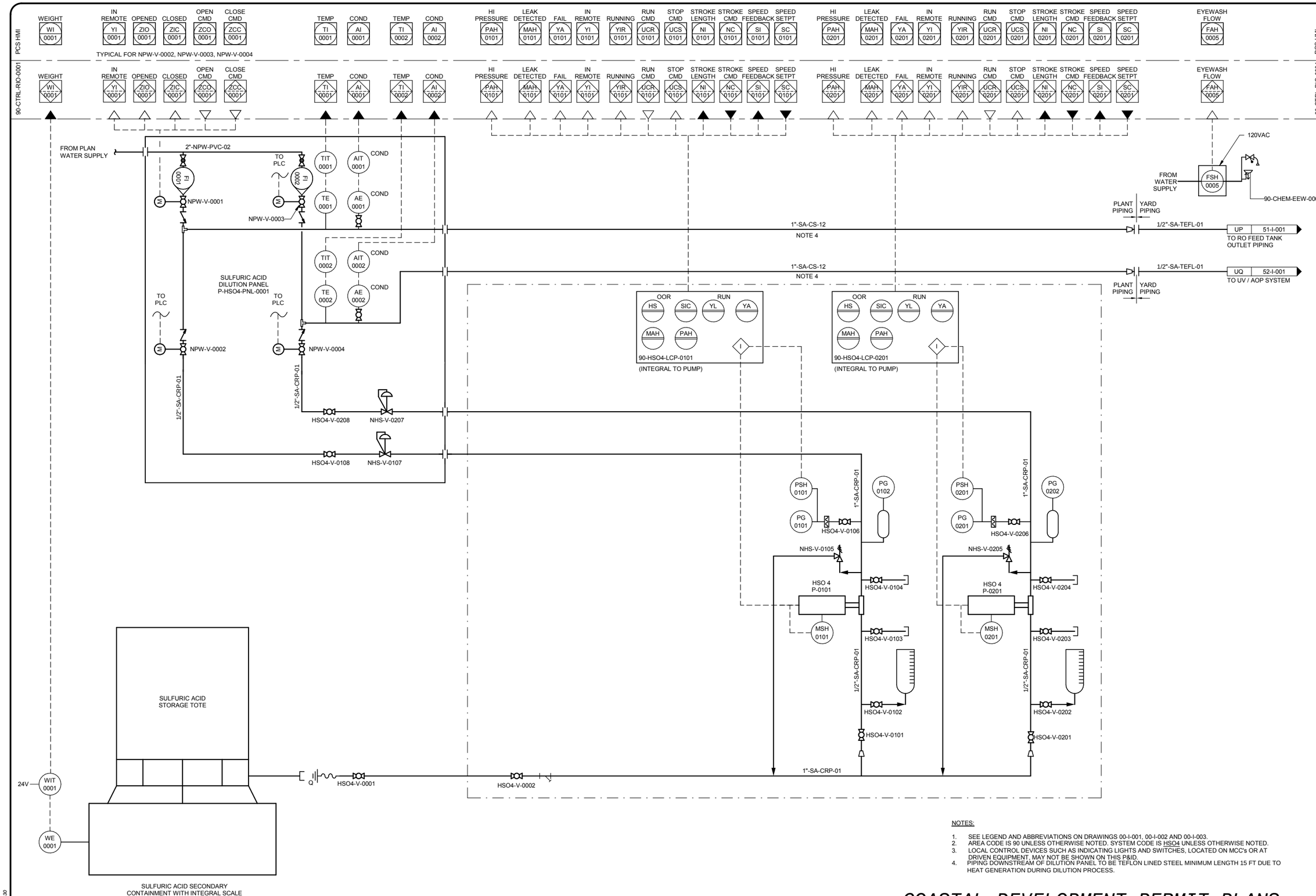


NOTES:

1. SEE LEGEND AND ABBREVIATIONS ON DRAWINGS 00-I-001, 00-I-002 AND 00-I-003.
2. AREA CODE IS 90 UNLESS OTHERWISE NOTED. SYSTEM CODE IS HSO4 UNLESS OTHERWISE NOTED.
3. LOCAL CONTROL DEVICES SUCH AS INDICATING LIGHTS AND SWITCHES, LOCATED ON MCC's OR AT DRIVEN EQUIPMENT, MAY NOT BE SHOWN ON THIS P&ID.
4. PIPING DOWNSTREAM OF DILUTION PANEL TO BE TEFLON LINED STEEL MINIMUM LENGTH 15 FT DUE TO HEAT GENERATION DURING DILUTION PROCESS.

# COASTAL DEVELOPMENT PERMIT PLANS

| NO. | BY | CHK | APP | REVISIONS AND RECORD OF USE | DATE |
|---|---|---|---|---|---|
| B | BLB | TAH | EVB | 60% SUBMITTAL | 7/30/2019 |
| A | BLB | TAH | EVB | 30% SUBMITTAL | 3/5/2019 |

BLACK & VEATCH
JOINT VENTURE
FILANC
BLACK & VEATCH

CITY OF MORRO BAY
MORRO BAY WATER RECLAMATION FACILITY (WRF)

CHEMICALS - CHEMICAL FACILITY
P&ID
SULFURIC ACID STORAGE & FEED

DESIGNED: BLB, ADV
DETAILED: PVR
CHECKED: TAH
APPROVED:
DATE:

0 1/2 1
IF THIS BAR DOES NOT MEASURE 1" THEN DRAWING IS NOT TO FULL SCALE

PROJECT NO. 400530

90-I-007
SHEET OF

PLOTTED: 30-07-2019 15:24:01
D400530

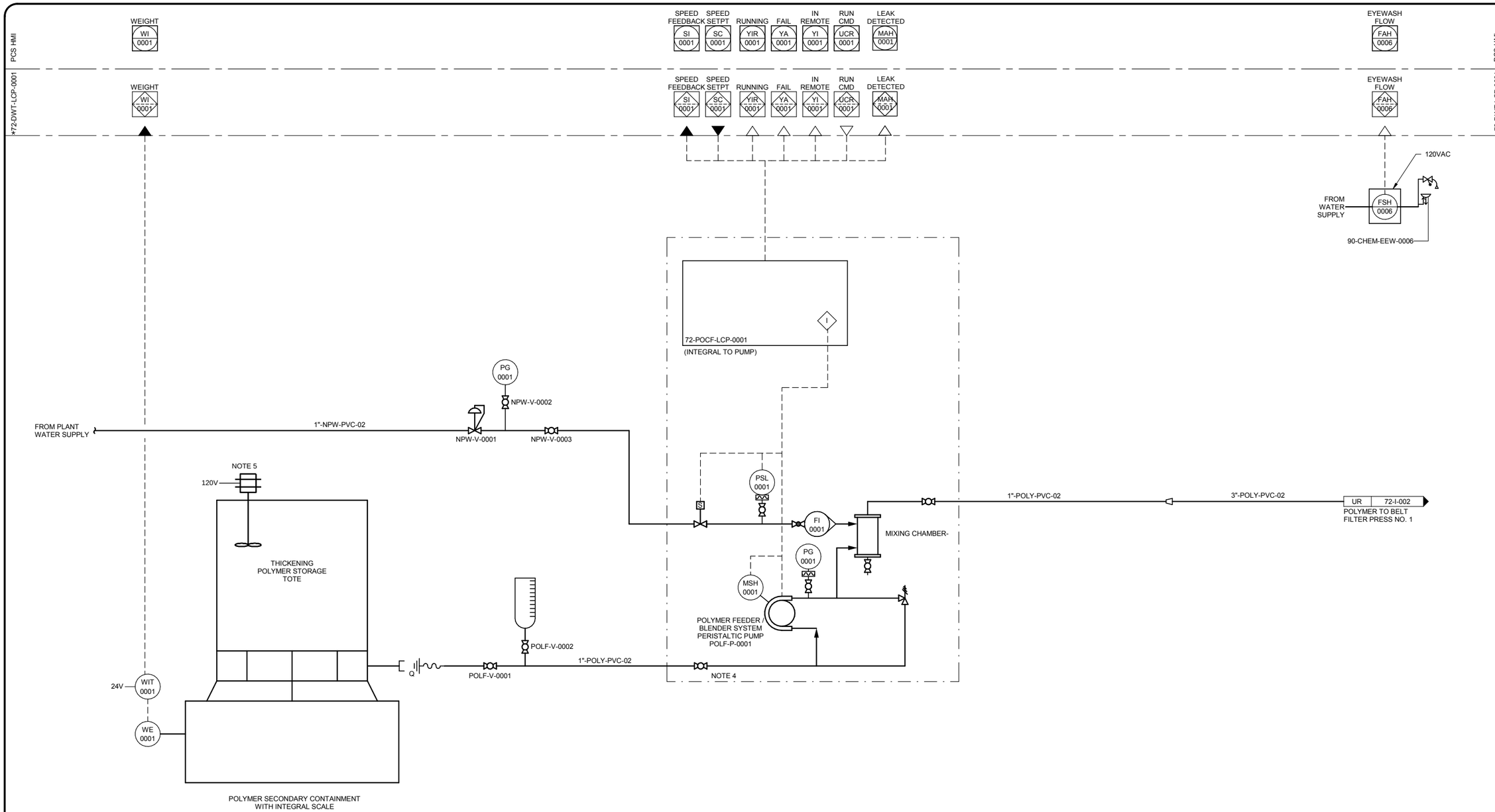


NOTES:

1. SEE LEGEND AND ABBREVIATIONS ON DRAWING 00-I-001, 00-I-002 AND 00-I-003.
2. AREA CODE IS 90 UNLESS OTHERWISE NOTED. SYSTEM CODE IS POLF UNLESS OTHERWISE NOTED.
3. LOCAL CONTROL DEVICES SUCH AS INDICATING LIGHTS AND SWITCHES, LOCATED IN MCC's OR AT DRIVEN EQUIPMENT MAY NOT INDICATED ON THIS P&ID.
4. DETAILS OF FEEDER / BLENDER SKID TO BE CONFIRMED WITH SELECTED VENDOR EQUIPMENT.
5. MIXER TO BE POWERED FROM LOCAL WALL RECEPTICLE. REFER TO POLYMER SYSTEM SPECIFICATION FOR ADDITIONAL INFORMATION.

| NO. | BY | CHK | APP |
|---|---|---|---|
| B | BLB | TAH | EVB |
| A | BLB | TAH | EVB |

REVISIONS AND RECORD OF USE

| DATE | |
|---|---|
| 7/30/2019 | 60% SUBMITTAL |
| 3/5/2019 | 30% SUBMITTAL |

BLACK & VEATCH
JOINT VENTURE
FILANC
BLACK & VEATCH

CITY OF MORRO BAY
MORRO BAY WATER
RECLAMATION FACILITY (WRF)

CHEMICALS - DEWATERING AREA
P&ID
THICKENING POLYMER STORAGE & FEED

DESIGNED: BLB, ADV
DETAILED: PVR
CHECKED: TAH
APPROVED:
DATE:

0 1/2 1
IF THIS BAR DOES NOT MEASURE 1" THEN DRAWING IS NOT TO FULL SCALE

PROJECT NO.
400530

90-I-008
SHEET
OF

COASTAL DEVELOPMENT PERMIT PLANS

PLOTTED: 30-07-2019 15:24:02
D400530

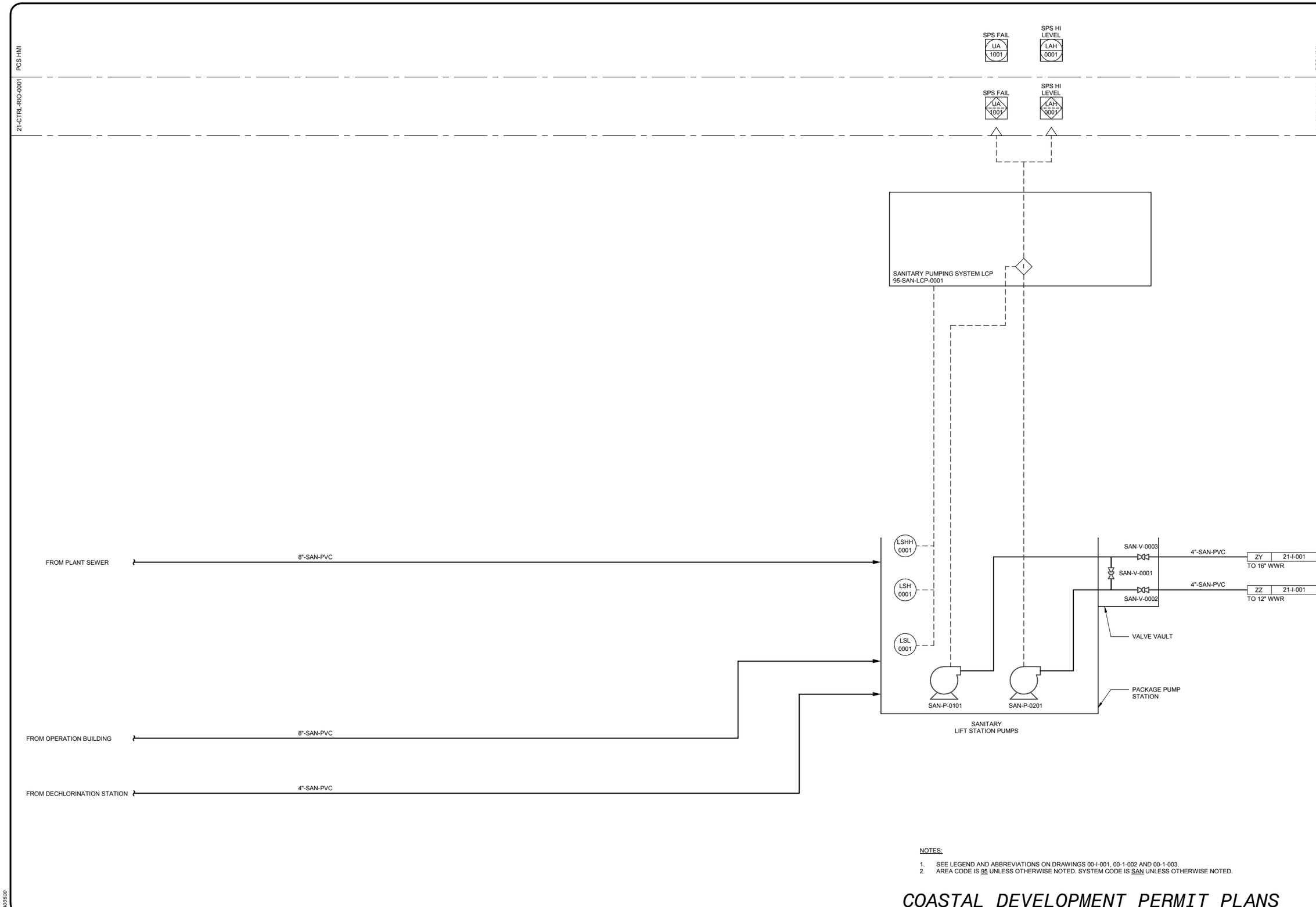


NOTES:

1. SEE LEGEND AND ABBREVIATIONS ON DRAWINGS 00-I-001, 00-1-002 AND 00-1-003.
2. AREA CODE IS 95 UNLESS OTHERWISE NOTED. SYSTEM CODE IS SAN UNLESS OTHERWISE NOTED.

# COASTAL DEVELOPMENT PERMIT PLANS

| NO. | BY | CHK | APP |
|---|---|---|---|
| A | BLB | TAH | EVB |

60% SUBMITTAL
REVISIONS AND RECORD OF USE
DATE 7/30/2019

BLACK & VEATCH
JOINT VENTURE
FILANC
BLACK & VEATCH

CITY OF MORRO BAY
FILANC BLACK & VEATCH DB PROPOSAL
RECLAMATION FACILTY (WRF)

P&ID
SANITARY PUMPING SYSTEM

DESIGNED: BLB,KEZ
DETAILED: PVR
CHECKED: TAH
APPROVED:
DATE:

0 1/2 1
IF THIS BAR DOES NOT MEASURE 1" THEN DRAWING IS NOT TO FULL SCALE

PROJECT NO.
400530

95-I-001
SHEET
OF

PLOTTED: 29-07-2019 14:58:27
D400530

# STRUCTURAL LEGENDS & ABBREVIATIONS

## ABBREVIATIONS

### A

| | |
|---|---|
| ADDL | ADDITIONAL |
| AFF | ABOVE FINISH FLOOR |
| AHR | ANCHOR |
| AHU | AIR HANDLING UNIT |
| ALT | ALTERNATE |
| ALUM | ALUMINUM |
| APPROX | APPROXIMATE |
| AROD | ANCHOR ROD |
| ARCH | ARCHITECTURAL |
| ASSY | ASSEMBLY |
| AWG | AMERICAN WIRE GAUGE |

### B

| | |
|---|---|
| BLDG | BUILDING |
| BM | BENCHMARK, BEAM |
| BO | BOTTOM OF |
| BOT | BOTTOM |
| BRDG | BRIDGING |
| BRG | BEARING |
| BTWN | BETWEEN |

### C

| | |
|---|---|
| C | CAMBER |
| CANTIL | CANTILEVER |
| CHKD | CHECKERED |
| CHKDPL | CHECKERED PLATE |
| CIP | CAST-IN-PLACE |
| CJ | CONTRACTION JOINT |
| CJP | COMPLETE JOINT PENETRATION |
| CL | CENTERLINE |
| CLR | CLEAR |
| CMU | CONCRETE MASONRY UNIT |
| COL | COLUMN |
| CONC | CONCRETE |
| CONN | CONNECTION |
| CONSTR | CONSTRUCTION |
| CONT | CONTINUOUS, CONTINUATION, CONTROL |
| COORD | COORDINATE |
| COV | COVER |
| CRNR | CORNER |
| CSJ | CONSTRUCTION JOINT |
| CTRS | CENTERS |

### D

| | |
|---|---|
| db | BAR DIAMETER |
| DBA | DEFORMED BAR ANCHOR |
| DET | DETAIL |
| DIA | DIAMETER |
| DIM | DIMENSION |
| DN | DOWN |
| DWA | DEFORMED WIRE ANCHOR |
| DWG | DRAWING |
| DWL | DOWEL |

### E

| | |
|---|---|
| E | EAST |
| EA | EACH |
| EF | EACH FACE |
| EJ | EXPANSION JOINT |
| EL | ELEVATION |
| EMBED | EMBEDMENT |
| EMER | EMERGENCY |
| ENGR | ENGINEER |
| EQ | EQUAL |
| EQUIP | EQUIPMENT |
| EQUIV | EQUIVALENT |
| EW | EACH WAY |
| EXIST | EXISTING |
| EXP | EXPANSION |
| EXT | EXTERIOR |

### F

| | |
|---|---|
| FAB | FABRICATE |
| f`c | 28 DAY CONCRETE STRENGTH = |
| FD | FLOOR DRAIN |
| FDN | FOUNDATION |
| FIN | FINISH(ED) |
| FLR | FLOOR |
| FS | FAR SIDE |
| FT | FOOT |
| FTG | FOOTING |
| FUT | FUTURE |
| FV | FIELD VERIFY |
| Fy | STRUCTURAL STEEL YIELD STRENGTH = |
| fy | REINFORCING STEEL YIELD STRENGTH = |

### G

| | |
|---|---|
| GA | GAUGE |
| GALV | GALVANIZED |
| GEN | GENERAL |
| GR | GRADE |

### H

| | |
|---|---|
| H | HORIZONTAL REACTION |
| HC | HOLLOW CORE |
| HEX | HEXAGONAL |
| HGR | HANGER |
| HORIZ | HORIZONTAL |
| HP | HIGH POINT |
| HSA | HEADED STUD ANCHOR |
| HSS | HOLLOW STRUCTURAL SECTION |

### I

| | |
|---|---|
| ID | INSIDE DIAMETER |
| IF | INSIDE FACE |
| IN | INCHES |
| INT | INTERIOR, INTERNAL |
| INV | INVERT |

### J

| | |
|---|---|
| JT | JOINT |

### K

| | |
|---|---|
| K | KIPS (1000 LBS) |
| KSF | KIPS PER SQUARE FOOT |
| KSI | KIPS PER SQUARE INCH |

### L

| | |
|---|---|
| LAB | LABORATORY |
| LB | POUND |
| ld | DEVELOPMENT LENGTH |
| LIN | LINES |
| LLBB | LONG LEG BACK TO BACK |
| LLH | LONG LEG HORIZONTAL |
| LLV | LONG LEG VERTICAL |
| LONG | LONGITUDINAL |
| LP | LOW POINT |
| LSLT | LONG SLOTTED HOLE TRANSVERSE |
| LSH | LONG SIDE HORIZONTAL |
| LSHP | LONG SLOTTED HOLE PARALLEL |
| LSV | LONG SIDE VERTICAL |
| LWC | LIGHTWEIGHT CONCRETE |

### M

| | |
|---|---|
| M | MOMENT |
| MAS | MASONRY |
| MAX | MAXIMUM |
| MATL | MATERIAL |
| MC | MOMENT CONNECTION, MECHANICAL COUPLING |
| MECH | MECHANICAL |
| MEZZ | MEZZANINE |
| MFR | MANUFACTURE(R) |
| MIN | MINIMUM |
| MISC | MISCELLANEOUS |
| MTL | METAL |

### N

| | |
|---|---|
| N | NORTH |
| N/A | NOT APPLICABLE |
| NIC | NOT IN CONTRACT |
| NO. | NUMBER |
| NOM | NOMINAL |
| NS | NEAR SIDE |
| NTS | NOT TO SCALE |
| NWC | NORMAL WEIGHT CONCRETE |

### O

| | |
|---|---|
| OC | ON CENTER |
| OD | OUTSIDE DIAMETER |
| OF | OUTSIDE FACE |
| OPER | OPERATING |
| OPH | OPPOSITE HAND |
| OPNG | OPENING |
| OPP | OPPOSITE |
| OVS | OVERSIZED HOLE |
| OZ | OUNCE |

### P

| | |
|---|---|
| P | AXIAL LOAD |
| PAF | POWDER ACTUATED FASTENER |
| PAR | PARALLEL |
| PCC | PRECAST CONCRETE |
| PCF | POUNDS PER CUBIC FOOT |
| PERP | PERPENDICULAR |
| PL | PLATE |
| PLCS | PLACES |
| PLF | POUNDS PER LINEAR FOOT |
| PJP | PARTIAL JOINT PENETRATION |
| PR | PAIR |
| PRELIM | PRELIMINARY |
| PROP | PROPERTY |
| PSF | POUNDS PER SQUARE FOOT |
| PSI | POUNDS PER SQUARE INCH |
| PT | POST TENSIONED |

### Q

| | |
|---|---|
| QTY | QUANTITY |

### R

| | |
|---|---|
| R | RADIUS |
| RCP | REINFORCED CONCRETE PIPE |
| RD | ROOD DRAIN |
| REF | REFERENCE |
| REINF | REINFORCEMENT |
| REQD | REQUIRED |
| REV | REVISION |
| RO | ROUGH OPENING |

### S

| | |
|---|---|
| S | SOUTH |
| SC | SLIP CRITICAL, SHEAR CONNECTOR |
| SCHED | SCHEDULE |
| SDS | SELF DRILLING SCREW |
| SECT | SECTION |
| SH | SHEET |
| SIM | SIMILAR |
| SJ | SAW JOINT |
| SLBB | SHORT LEG BACK TO BACK |
| SOG | SLAB ON GRADE |
| SPA | SPACING |
| SPEC | SPECIFICATION |
| SPRT | SUPPORT |
| SQ | SQUARE |
| SSHP | SHORT SLOTTED HOLE PARALLEL |
| SSHT | SHORT SLOTTED HOLE TRANSVERSE |
| STD | STANDARD |
| STIF | STIFFENER |
| STIR | STIRRUP |
| STL | STEEL |
| STR | STRUCTURE, STRUCTURAL |
| SYM | SYMMETRICAL |

### T

| | |
|---|---|
| T | TREAD, SCHEDULED PLATE THICKNESS |
| T&B | TOP & BOTTOM |
| TAN | TANGENT |
| TEMP | TEMPERATURE |
| THK | THICK, THICKNESS |
| THD | THREADED |
| TO | TOP OF |
| TOC | TOP OF CONCRETE |
| TOF | TOP OF FOOTING |
| TOM | TOP OF MASONRY |
| TOS | TOP OF STEEL, TOP OF SLAB |
| TOW | TOP OF WALL |
| TYP | TYPICAL |

### U

| | |
|---|---|
| UNO | UNLESS NOTED OTHERWISE |
| USGS | UNITED STATES GEOLOGICAL SURVEY |

### V

| | |
|---|---|
| VERT | VERTICAL |
| VNR | VENEER |

### W

| | |
|---|---|
| W | WEST |
| W/ | WITH |
| W/O | WITHOUT |
| WF | WIDE FLANGE |
| WP | WORK POINT |
| WS | WATERSTOP |
| WT | WEIGHT |
| WWR | WELDED WIRE REINFORCEMENT |

### X

| | |
|---|---|
| x | BY, TIMES |
| XS | EXTRA STRONG |
| XXS | DOUBLE EXTRA STRONG |

### Y

Not Used

### Z

| | |
|---|---|
| ZD | ZONE DAMPER |

### SPECIAL CHARACTERS

| | |
|---|---|
| @ | AT |
| & | AND |
| ø | DIAMETER |
| # | NUMBER |
| % | PERCENT |

## WELD SYMBOL LEGEND

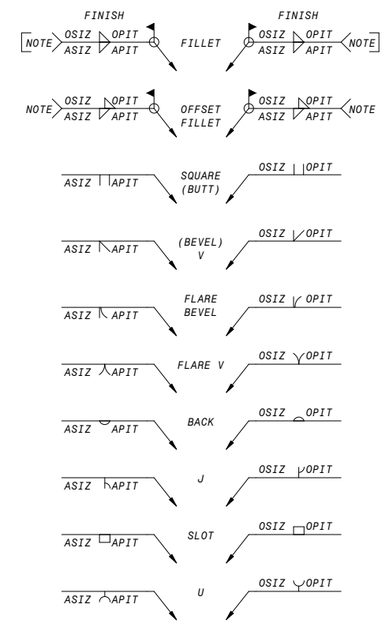


## STRUCTURAL TAG LEGEND

CALLOUTS ARE GENERAL TEXT UNLESS NOTED OTHERWISE. THESE TAGS ARE BV CUSTOM AND REQUIRE BIM APPROVED MODEL CONTENT DATA

| | |
|---|---|
| W00x00 | **COLUMN TAG** (BV DATA)<br>COLUMN TYPE |
| TYPE MARK | **STRUCTURAL FOUNDATION**<br>(TYPE MARK) |
| X00x00 | **STRUCTURAL FRAMING** (BV DATA)<br>FRAMING TYPE |
| 00K00 | **STRUCTURAL FRAMING** (BV DATA)<br>JOIST OR SLAB |

## DESIGN PARAMETERS

**GENERAL PARAMETERS**

| | |
|---|---|
| BUILDING CODE | 2016 CBC * |
| ROOF LOADS | |
| DEAD LOADS (DL) | VARIES |
| LIVE LOADS (LL) | 20 psf |

**SOILS VALUES** (PER SOILS REPORT)

| | |
|---|---|
| BEARING PRESSURE - RECOMPACTED FILL | 3000 psf |
| BEARING PRESSURE - BEDROCK | 5000 psf |
| LATERAL PASSIVE EFP | 350 pcf |
| AT-REST EFP | 65 pcf |
| ACTIVE EFP | 50 pcf |
| FRICTION COEFFICIENT | 0.40 |

**WIND DESIGN BASIS**

| | |
|---|---|
| ULTIMATE WIND SPEED, $V_{ULT}$ | 115 mph |
| RISK CATEGORY | III |
| EXPOSURE | C |
| IMPORTANCE FACTOR, $I_W$ | 1.00 |

**SEISMIC DESIGN BASIS**

| | |
|---|---|
| SEISMIC DESIGN CATEGORY | D |
| SITE CLASS | C |
| SEISMIC FACTORS | |
| $S_S$ / $S_1$ | 1.135 / 0.421 |
| $S_{DS}$/ $S_{D1}$ | 0.757 / 0.387 |
| RISK CATEGORY | III |
| IMPORTANCE FACTOR, $I_e$ | 1.25 |

*THE 2016 CALIFORNIA BUILDING CODE (CBC), BASED ON THE 2015 INTERNATIONAL BUILDING CODE (IBC), IS THE GOVERNING CODE IN THE STATE OF CALIFORNIA.

COASTAL DEVELOPMENT PERMIT PLANS

| NO. | BY | CHK | APP | REVISIONS AND RECORD OF USE | DATE |
|---|---|---|---|---|---|

Ashley & Vance ENGINEERING, INC
JOINT VENTURE
FILANC
BLACK & VEATCH

CITY OF MORRO BAY
FILANC BLACK & VEATCH DB PROPOSAL
WATER RECLAMATION FACILITY (WRF)

DESIGNED: I. SHOEBRIDGE
DETAILED: S. BENJAMIN
CHECKED: Checker
APPROVED: Approver
DATE: XX/XX/XXXX

0 1/2 1
IF THIS BAR DOES NOT MEASURE 1" THEN DRAWING IS NOT TO FULL SCALE

PROJECT NO. 400530

00-S-001
SHEET OF XXX

PLOTTED: 7/29/2019 7:05:51 PM
D400530

# STRUCTURAL GENERAL NOTES

**GENERAL**

1. THE FOLLOWING NOTES, DETAILS, SCHEDULES & SPECIFICATIONS SHALL APPLY TO ALL PHASES OF THIS PROJECT UNLESS SPECIFICALLY NOTED OTHERWISE. NOTES AND DETAILS ON THE STRUCTURAL PLANS SHALL TAKE PRECEDENCE OVER GENERAL NOTES AND TYPICAL DETAILS. WHERE NO DETAILS ARE GIVEN, CONSTRUCTION SHALL BE AS SHOWN FOR SIMILAR WORK.
2. ALL DRAWINGS ARE CONSIDERED TO BE PART OF THE CONTRACT DOCUMENTS. THE DESIGN-BUILDER SHALL BE RESPONSIBLE FOR THE REVIEW AND COORDINATION OF ALL DRAWINGS AND SPECIFICATIONS PRIOR TO THE START OF CONSTRUCTION. ANY DISCREPANCIES SHALL BE BROUGHT TO THE ATTENTION OF THE ENGINEER PRIOR TO THE START OF CONSTRUCTION SO THAT A CLARIFICATION CAN BE ISSUED. ANY WORK PERFORMED IN CONFLICT WITH THE CONTRACT DOCUMENTS OR ANY APPLICABLE CODE REQUIREMENTS SHALL BE CORRECTED BY THE DESIGN-BUILDER AT NO EXPENSE TO THE OWNER OR ENGINEER.
3. ALL INFORMATION ON EXISTING CONDITIONS SHOWN ON THE STRUCTURAL PLANS ARE BASED ON BEST PRESENT KNOWLEDGE AVAILABLE, BUT WITHOUT GUARANTEE OF ACCURACY. THE DESIGN-BUILDER SHALL BE RESPONSIBLE FOR THE VERIFICATIONS OF ALL DIMENSION AND CONDITIONS AT THE SITE. ANY DISCREPANCIES BETWEEN ACTUAL SITE CONDITIONS AND INFORMATION SHOWN ON THE DRAWINGS OR IN THE SPECIFICATIONS SHALL BE BROUGHT TO THE ATTENTION OF THE EOR PRIOR TO THE START OF CONSTRUCTION.
4. REFER TO THE ARCHITECTURAL PLANS FOR THE FOLLOWING:
   - (A) DIMENSIONS
   - (B) SIZE AND LOCATION OF ALL INTERIOR AND EXTERIOR WALL LOCATIONS.
   - (C) SIZE AND LOCATION OF ALL FLOOR, ROOF AND WALL OPENINGS
   - (D) SIZE AND LOCATION OF ALL DRAINS, SLOPES, DEPRESSIONS, STEPS, ETC.
   - (E) SPECIFICATION OF ALL FINISHES & WATERPROOFING
   - (F) ALL OTHER NON-STRUCTURAL ELEMENTS
5. REFER TO THE MECHANICAL, ELECTRICAL AND PLUMBING PLANS FOR THE FOLLOWING:
   - (A) SIZE AND LOCATION OF ALL EQUIPMENT
   - (B) PIPE RUNS, SLEEVES, HANGERS AND TRENCHES
   - (C) ALL OTHER MECHANICAL, ELECTRICAL OR PLUMBING RELATED ELEMENTS
6. CONSTRUCTION MATERIALS SHALL BE UNIFORMLY SPREAD OUT IF PLACED ON FLOOR OR ROOF SO AS TO NOT OVERLOAD THE FRAMING. LOAD SHALL NOT EXCEED THE DESIGN LIVE LOAD PER SQUARE FOOT. IT IS THE DESIGN-BUILDER'S RESPONSIBILITY TO PROVIDE ADEQUATE SHORING AND/OR BRACING AS REQUIRED.
7. SPECIFICATIONS AND DETAILING OF ALL WATERPROOFING AND DRAINAGE ITEMS, WHILE SOMETIMES SHOWN ON THE STRUCTURAL PLANS FOR GENERAL INFORMATION PURPOSES ONLY, ARE SOLELY THE DESIGN RESPONSIBILITY OF OTHERS.
8. THE ENGINEER WILL NOT BE RESPONSIBLE FOR AND WILL NOT HAVE CONTROL OR CHARGE OF CONSTRUCTION MEANS, METHODS, TECHNIQUES, SEQUENCES OR PROCEDURES, OR FOR SAFETY PRECAUTIONS AND PROGRAMS IN CONNECTION WITH THE CONSTRUCTION DELINEATED BY THESE PLANS. IT SHOULD BE UNDERSTOOD THAT THE DESIGN-BUILDER OR HIS/HER AGENT(S) SHALL SUPERVISE AND DIRECT ALL WORK AND SHALL BE SOLELY AND COMPLETELY RESPONSIBLE FOR ALL CONSTRUCTION MEANS, METHODS, TECHNIQUES, SEQUENCES, PROCEDURES AND CONDITIONS ON THE JOB SITE, INCLUDING SAFETY OF ALL PERSONS AND PROPERTY DURING THE ENTIRE PERIOD OF CONSTRUCTION. PERIODIC OBSERVATIONS BY THE ENGINEER, HIS STAFF OR REPRESENTATIVES ARE NOT INTENDED TO INCLUDE VERIFICATION OF DIMENSIONS OR REVIEW THE ADEQUACY OF THE DESIGN-BUILDER'S SAFETY MEASURES ON OR NEAR THE CONSTRUCTION SITE.
9. MODIFICATIONS OF THE PLANS, NOTES, DETAILS AND SPECIFICATIONS SHALL NOT BE PERMITTED WITHOUT PRIOR APPROVAL FROM THE ENGINEER.
10. ALL WORKMANSHIP SHALL CONFORM TO THE BEST PRACTICE PREVAILING IN THE VARIOUS TRADES PERFORMING THE WORK. THE DESIGN-BUILDER SHALL BE RESPONSIBLE FOR COORDINATING THE WORK OF ALL TRADES.
11. IT IS THE DESIGN-BUILDER'S RESPONSIBILITY TO ENSURE THAT ONLY APPROVED STRUCTURAL PLANS ARE USED DURING THE COURSE OF CONSTRUCTION. THE USE OF UNAPPROVED DOCUMENTS SHALL BE AT THE DESIGN-BUILDER'S OWN RISK. CORRECTIONS OF ALL WORK BASED ON SUCH DOCUMENTS SHALL BE PERFORMED AT THE DESIGN-BUILDER'S EXPENSE.
12. THESE PLANS AND SPECIFICATIONS REPRESENT THE STRUCTURAL DESIGN ONLY. NO INFORMATION NOR WARRANTY IS PROVIDED FOR THE WORK OF ANY OTHER CONSULTANT (ARCHITECT, MECHANICAL, ELECTRICAL, ETC.). THIS INCLUDES, BUT IS NOT LIMITED TO, WATERPROOFING, DRAINAGE, VENTILATION, ACCESSIBILITY, OR DIMENSIONS.

**FOUNDATIONS**

1. REFER TO STRUCTURAL DESIGN PARAMETERS SECTION ON SHEET 00-S-001 FOR ALL SOIL DESIGN VALUES USED IN CALCULATIONS.
2. SOILS VALUES PER GEOLOGIC/GEOTECHNICAL REPORT (OR "SOILS REPORT") BY EARTH SYSTEMS PACIFIC, FILE NO. 301964-002, DATED JULY 1, 2019. THIS REPORT AND ALL RECOMMENDATIONS CONTAINED THEREIN ARE TO BE CONSIDERED A PART OF THESE PLANS.
3. IT IS THE DESIGN-BUILDER'S RESPONSIBILITY TO OBTAIN A COPY OF THE SOILS REPORT FROM THE OWNER. A COPY OF THE SOILS REPORT SHALL BE ON THE JOB SITE DURING THE COURSE OF CONSTRUCTION.
4. UNEXPECTED SOIL CONDITIONS: ALLOWABLE VALUES AND SUBSEQUENT FOUNDATION DESIGNS ARE BASED ON SOIL CONDITIONS WHICH ARE SHOWN BY TEST BORINGS. ACTUAL SOIL CONDITIONS WHICH DEVIATE APPRECIABLY FROM THAT SHOWN IN THE TEST BORINGS SHALL BE REPORTED TO THE ENGINEER IMMEDIATELY.
5. ALL COMPACTION, FILL, BACKFILLING AND SITE PREPARATION SHALL BE PERFORMED IN ACCORDANCE WITH PROJECT SOILS REPORT OR THE GOVERNING BUILDING CODE CHAPTER 18 & APPENDIX J. ALL SUCH WORK SHALL BE PERFORMED PER THE RECOMMENDATIONS OF THE PROJECT SOILS ENGINEER.
6. EXCAVATE TO REQUIRED DEPTHS AND DIMENSIONS (AS INDICATED IN THE DRAWINGS), CUT SQUARE AND SMOOTH WITH FIRM LEVEL BOTTOMS. CARE SHALL BE TAKEN NOT TO OVER-EXCAVATE FOUNDATION AT LOWER ELEVATION AND PREVENT DISTURBANCE OF SOILS AROUND HIGH ELEVATION.
7. FOUNDATIONS SHALL BE POURED IN NEAT EXCAVATIONS.
8. EXCAVATE ALL FOUNDATIONS TO REQUIRED DEPTHS INTO COMPACTED FILL OR NATURAL SOIL (AS PER PLANS AND DETAILS) AND AS VERIFIED BY THE BUILDING OFFICIAL AND/OR SOILS ENGINEER.
9. ALL FOUNDATIONS SHALL BE INSPECTED AND APPROVED BY THE APPROPRIATE BUILDING OFFICIAL AND/OR A REPRESENTATIVE OF THE SOILS ENGINEER PRIOR TO FORMING AND PLACEMENT OF REINFORCING OR CONCRETE.
10. FOUNDATIONS SHALL NOT BE POURED UNTIL ALL REQUIRED REINFORCING STEEL, FRAMING HARDWARE, SLEEVES, INSERTS, CONDUITS, PIPES, ETC. AND FORMWORK IS PROPERLY PLACED AND INSPECTED BY THE APPROPRIATE BUILDING OFFICIAL/INSPECTOR(S).
11. IT IS THE RESPONSIBILITY OF THE DESIGN-BUILDER IN CHARGE OF FRAMING TO PROPERLY POSITION ALL HOLDOWN BOLTS, ANCHOR BOLTS, COLUMN BASES, AND ALL OTHER CAST-IN-PLACE HARDWARE. REFER TO TYPICAL DETAILS. ALL HARDWARE TO BE SECURED PRIOR TO FOUNDATION INSPECTIONS.
12. THE SIDES AND BOTTOMS OF DRY EXCAVATIONS MUST BE MOISTENED JUST PRIOR TO PLACING CONCRETE. CONVERSELY, DE-WATER FOOTINGS AS REQUIRED TO REMOVE STANDING WATER AND TO MAINTAIN OPTIMUM WORKING CONDITIONS.
13. THE DESIGN-BUILDER SHALL BE SOLELY RESPONSIBLE FOR ALL EXCAVATION PROCEDURES INCLUDING LAGGING, SHORING, AND THE PROTECTION OF ADJACENT PROPERTY, STRUCTURES, STREETS, AND UTILITIES IN ACCORDANCE WITH ALL FEDERAL, STATE AND LOCAL SAFETY ORDINANCES. THE DESIGN-BUILDER SHALL PROVIDE FOR THE DESIGN AND INSTALLATION OF ALL CRIBBING, BRACING AND SHORING REQUIRED.

COASTAL DEVELOPMENT PERMIT PLANS

| DATE | REVISIONS AND RECORD OF USE | NO. | BY | CHK | APP |
|---|---|---|---|---|---|

Ashley & Vance ENGINEERING, INC
JOINT VENTURE
FILANC
BLACK & VEATCH

CITY OF MORRO BAY
FILANC BLACK & VEATCH DB PROPOSAL
WATER RECLAMATION FACILITY (WRF)

DESIGNED: I. SHOEBRIDGE
DETAILED: S. BENJAMIN
CHECKED: Checker
APPROVED: Approver
DATE: XX/XX/XXXX

0 1/2 1
IF THIS BAR DOES NOT MEASURE 1" THEN DRAWING IS NOT TO FULL SCALE

PROJECT NO.
400530

00-S-002
SHEET
OF XXX

PLOTTED: 7/29/2019 7:05:51 PM
D400530

**STATEMENT OF SPECIAL INSPECTIONS, 2016 CBC**

1. THIS STATEMENT OF SPECIAL INSPECTION IS SUBMITTED IN FULFILLMENT OF THE REQUIREMENTS OF THEGOVERNING BUILDING CODE, SECTION 1704 AND 1705.
2. SPECIAL INSPECTIONS AND TESTINGS WILL BE PREFORMED IN ACCORDANCE WITH THE APPROVED PLANS AND SPECIFICATIONS, THIS STATEMENT AND THE GOVERNING BUILDING CODE, SECTION 1704, 1705, 1707, AND 1708.
3. THE SCHEDULE OF SPECIAL INSPECTIONS SUMMARIZES THE SPECIAL INSPECTIONS AND TESTS REQUIRED. SPECIAL INSPECTORS WILL REFER TO THE APPROVED PLANS AND SPECIFICATIONS FOR DETAILED SPECIAL INSPECTION REQUIREMENTS. ANY ADDITIONAL TESTS AND INSPECTIONS REQUIRED BY THE APPROVED PLANS AND SPECIFICATIONS WILL ALSO BE PERFORMED.
4. INTERIM REPORTS WILL BE SUBMITTED TO THE BUILDING OFFICIAL AND THE REGISTERED DESIGN PROFESSIONAL IN RESPONSIBLE CHARGE IN ACCORDANCE WITH THE GOVERNING BUILDING CODE SECTION 1704.2.4.
5. A FINAL REPORT OF SPECIAL INSPECTIONS DOCUMENTING REQUIRED SPECIAL INSPECTIONS, TESTING AND CORRECTION OF ANY DISCREPANCIES NOTED IN THE INSPECTIONS SHALL BE SUBMITTED PRIOR TO ISSUANCE OF A CERTIFICATE OF USE AND OCCUPANCY (SECTION 1704.2.4). THE FINAL REPORT WILL DOCUMENT:
   (A) REQUIRED SPECIAL INSPECTIONS.
   (B) CORRECTION OF DISCREPANCIES NOTED IN INSPECTIONS.
6. THE OWNER RECOGNIZES HIS OR HER OBLIGATION TO ENSURE THAT THE CONSTRUCTION COMPLIES WITH THE APPROVED PERMIT DOCUMENTS AND TO IMPLEMENT THIS PROGRAM OF SPECIAL INSPECTIONS. IN PARTIAL FULFILLMENT OF THESE OBLIGATIONS, THE OWNER WILL RETAIN AND DIRECTLY PAY FOR THE SPECIAL INSPECTIONS AS REQUIRED IN THE GOVERNING BUILDING CODE, SECTION 1704.2.
7. 1704.4 DESIGN-BUILDER RESPONSIBILITY. EACH DESIGN-BUILDER RESPONSIBLE FOR THE CONSTRUCTION OF A MAIN WIND- OR SEISMIC-FORCE-RESISTING SYSTEM, DESIGNATED SEISMIC SYSTEM OR A WIND- OR SEISMIC- RESISTING COMPONENT LISTED IN THE STATEMENT OF SPECIAL INSPECTIONS SHALL SUBMIT A WRITTEN STATEMENT OF RESPONSIBILITY TO THE BUILDING OFFICIAL AND THE OWNER PRIOR TO THE COMMENCEMENT OF WORK ON THE SYSTEM OR COMPONENT. THE DESIGN-BUILDER'S STATEMENT OF RESPONSIBILITY SHALL CONTAIN ACKNOWLEDGEMENT OF AWARENESS OF THE SPECIAL REQUIREMENTS CONTAINED IN THE STATEMENT OF SPECIAL INSPECTION.

**SCHEDULE OF TESTING AGENCIES & SPECIAL INSPECTORS**

THE FOLLOWING ARE THE TESTING AGENCIES AND SPECIAL INSPECTORS THAT WILL BE RETAINED TO CONDUCT TESTS AND INSPECTION ON THIS PROJECT.

| RESPONSIBILITY | FIRM | ADDRESS, TELEPHONE, EMAIL |
|---|---|---|
| 1. SPECIAL INSPECTION (EXCEPT FOR GEOTECHNICAL) | | |
| 2. MATERIALS TESTING | | |
| 3. GEOTECHNICAL INSPECTION | | |
| * | | |

* ADDITIONAL INSPECTIONS MAY BE REQUIRED AT THE DISCRETION OF THE BUILDING OFFICIAL.

**SEISMIC REQUIREMENTS (SECTION 1705.12)**

DESCRIPTION OF SEISMIC-FORCE-RESISTING SYSTEM AND DESIGNATED SEISMIC SYSTEMS SUBJECT TO SPECIAL INSPECTIONS PER SECTION 1705.11:

STEEL ORDINARY MOMENT FRAMES (ASCE 7, TABLE 12.2-1, LINE C.4)
STEEL ORDINARY BRACED FRAMES (ASCE 7, TABLE 12.2-1, LINE B.3)

THE EXTENT OF THE MAIN SEISMIC-FORCE-RESISTING SYSTEM IS DEFINED IN MORE DETAIL IN THE CONSTRUCTION DOCUMENTS.

**WIND REQUIREMENTS (SECTION 1705.11)**

DESCRIPTION OF MAIN WIND-FORCE-RESISTING SYSTEM AND DESIGNATED SEISMIC SYSTEMS SUBJECT TO SPECIAL INSPECTIONS PER SECTION 1705.10:

NOT APPLICABLE

THE EXTENT OF THE MAIN WIND-FORCE-RESISTING SYSTEM IS DEFINED IN MORE DETAIL IN THE CONSTRUCTION DOCUMENTS.

**SCHEDULE OF SPECIAL INSPECTIONS**

COLUMN HEADER NOTATION USED IN TABLE:
- C INDICATES CONTINUOUS INSPECTION IS REQUIRED.
- P INDICATES PERIODIC INSPECTIONS ARE REQUIRED. THE NOTES AND/OR CONTRACT DOCUMENTS SHOULD CLARIFY.

BOX ENTRY NOTATION USED IN TABLE:
- X IS PLACED IN THE APPROPRIATE COLUMN TO DENOTE EITHER "C" CONTINUOUS OR "P" PERIODIC INSPECTIONS.
- -- DENOTES A ONE-TIME ACTIVITY OR ONE WHOSE FREQUENCY IS DEFINED IN SOME OTHER MANNER.

ADDITIONAL DETAILS REGARDING INSPECTIONS ARE PROVIDED IN THE PROJECT SPECIFICATIONS OR NOTES ON THE DRAWINGS.

| VERIFICATION & INSPECTION | C | P | NOTES |
|---|---|---|---|
| **1704.2.5** - INSPECT FABRICATOR'S FABRICATION AND QUALITY CONTROL PROCEDURES. | -- | -- | |
| | | | |
| **1705.2** - STEEL | | | |
| 1. MATERIAL VERIFICATION OF HIGH-STRENGTH BOLTS, NUTS, AND WASHERS | | X | |
| A. IDENTIFICATION MARKINGS TO CONFORM TO ASTM STANDARDS SPECIFIED IN THE APPROVED CONSTRUCTION DOCUMENTS | | X | |
| B. MANUFACTURER'S CERTIFICATE OF COMPLIANCE REQUIRED | | X | |
| 2. INSPECTION OF HIGH-STRENGTH BOLTING: | | | |
| A. BEARING-TYPE CONNECTIONS | | X | |
| B. SLIP-CRITICAL CONNECTIONS | X | | |
| 3. MATERIAL VERIFICATION OF STRUCTURAL STEEL: | | | |
| A. IDENTIFICATION MARKINGS TO CONFORM TO ASTM STANDARDS SPECIFIED IN THE APPROVED CONSTRUCTION DOCUMENTS | -- | -- | |
| B. MANUFACTURER'S MILL TEST REPORTS | -- | -- | |
| 4. MATERIAL VERIFICATION OF WELD FILLER MATERIALS: | | | |
| A. IDENTIFICATION MARKINGS TO CONFORM TO AWS DESIGNATION LISTED IN THE WPS | -- | -- | |
| B. MANUFACTURER'S CERTIFICATE OF COMPLIANCE REQUIRED | -- | -- | |
| 5. INSPECTION OF WELDING: A. STRUCTURAL STEEL | | | |
| 1) COMPLETE AND PARTIAL PENETRATION GROOVE WELDS | X | | |
| 2) MULTI-PASS FILLET WELDS | X | | |
| 3) SINGLE-PASS FILLET WELDS > 5/16" | | X | |
| 4) SINGLE-PASS FILLET WELDS < 5/16" | | X | |
| 5) FLOOR AND ROOF DECK WELDS | | X | |
| b. REINFORCING STEEL | | | |
| 1) VERIFICATION OF WELDABILITY OF REINFORCING STEEL OTHER THAN ASTM A706 | | X | |
| 2) REINFORCING STEEL RESISTING FLEXURAL AND AXIAL FORCES IN INTERMEDIATE AND SPECIAL MOMENT FRAMES, AND BOUNDARY ELEMENTS OF SPECIAL REINFORCED CONCRETE SHEAR WALLS, AND SHEAR REINFORCEMENT | X | | |
| 3) SHEAR REINFORCEMENT | X | | |
| 4) OTHER REINFORCING STEEL | | X | |
| 6. INSPECTION OF STEEL FRAME JOINT DETAILS FOR COMPLIANCE WITH APPROVED CONSTRUCTION DOCUMENTS (BRACING & STIFFENING, MEMBER LOCATIONS, APPLICATION OF JOINT DETAILS AT EACH CONNECTION, ETC.) | | X | |
| 7. WELDED STUDS WHEN USED FOR STRUCTURAL DIAPHRAGMS | | X | |
| 8. WELDING OF COLD FORMED SHEET STEEL FRAMING MEMBERS | | X | |
| 9. WELDING OF STAIRS AND RAILING SYSTEMS | | X | |
| | | | |
| **1705.3** - CONCRETE | | | |
| 1. INSPECT REINFORCING STEEL, INCLUDING PRESTRESSING TENDONS, VERIFY AND PLACEMENT | | X | |
| 2. INSPECT REINFORCING STEEL WELDING IN ACCORDANCE WITH TABLE **1705.2 - STEEL**, ITEM 5A | -- | -- | |
| 3. INSPECT BOLTS TO BE CAST IN CONCRETE PRIOR TO AND DURING PLACEMENT OF CONCRETE | X | | |
| 4. INSPECT ANCHORS POST-INSTALLED IN HARDENED CONCRETE | | | |
| a. ADHESIVE ANCHORS[1] INSTALLED IN HORIZONTALLY OR UPWARDLY INCLINDED ORIENTATIONS TO RESIST SUSTAINED TENSION | X | | |
| b. MECHANICAL ANCHORS[2] AND ADHESIVE ANCHORS[1] NOT DEFINED IN 4.A | | X | |
| 5. VERIFYING USE OF REQUIRED DESIGN MIX | | X | |
| 6. PRIOR TO CONCRETE PLACEMENT, FABRICATE SPECIMENS FOR STRENGTH TESTS, PERFORM SLUMP AND AIR CONTENT TESTS, AND DETERMINE THE TEMPERATURE OF THE CONCRETE | X | | |
| 7. INSPECT CONCRETE AND SHOTCRETE PLACEMENT FOR PROPER APPLICATION TECHNIQUES | X | | |
| 8. VERIFY MAINTENANCE OF SPECIFIED CURING TEMPERATURE AND TECHNIQUES | | X | |
| 9. INSPECT PRESTRESSED CONCRETE FOR: | | | |
| A. APPLICATION OF PRESTRESSING FORCES | X | | |
| B. GROUTING OF BONDED PRESTRESSING TENDONS | X | | |
| 10. INSPECT ERECTION OF PRECAST CONCRETE MEMBERS | | X | |
| 11. VERIFY IN-SITU CONCRETE STRENGTH, PRIOR TO STRESSING OF TENDONS IN POST-TENSIONED CONCRETE AND PRIOR TO REMOVAL OF SHORES AND FORMS FROM BEAMS AND STRUCTURAL SLABS | | X | |
| 12. INSPECT FORMWORK FOR SHAPE, LOCATION, AND DIMENSIONS OF THE CONCRETE MEMBER BEING FORMED | | X | |

FOOTNOTES:
1. PRIOR TO EPOXY PLACEMENT, IT MUST BE VERIFIED THAT THE HOLE IS CLEAN, DRY, AND FREE OF LOOSE DEBRIS
2. PERIODIC INSPECTION SHALL TAKE PLACE SUCH THAT THE INSTALLATION OF A MINIMUM OF TWO (2) ANCHORS PER EACH SHEAR WALL ARE OBSERVED

| VERIFICATION & INSPECTION | C | P | NOTES |
|---|---|---|---|
| **1705.4** - MASONRY - LEVEL B QUALITY ASSURANCE | | | |
| 1. VERIFY COMPLIANCE WITH THE APPROVED SUBMITTALS | | X | |
| 2. AS MASONRY CONSTRUCTION BEGINS, VERIFY THAT THE FOLLOWING ARE IN COMPLIANCE: | | | |
| A. PROPORTIONS OF SITE-PREPARED MORTAR | | X | |
| B. CONSTRUCTION OF MORTAR JOINTS | | X | |
| C. GRADE AND SIZE OF PRETRESSING TENDONS AND ANCHORAGES | | X | |
| D. LOCATION OF REINFORCEMENT, CONNECTORS, AND PRESTRESSING TENDONS AND ANCHORAGES | | X | |
| E. PRESTRESSING TECHNIQUE | | X | |
| 3. PRIOR TO GROUTING, VERIFY THAT THE FOLLOWING ARE IN COMPLIANCE: | | | |
| A. GROUT SPACE IS CLEAN | | X | |
| B. GRADE, TYPE, AND SIZE OF REINFORCEMENT AND ANCHOR BOLTS, AND PRESTRESSING TENDONS AND ANCHORAGES | | X | |
| C. PLACEMENT OF REINFORCEMENT, CONNECTORS, AND PRESTRESSING TENDONS AND ANCHORAGES | | X | |
| D. PROPORTIONS OF SITE-PREPARED GROUT AND PRESTRESSING GROUT FOR BONDED TENDONS | | X | |
| E. CONSTRUCTION OF MORTAR JOINTS | | X | |
| 4. VERIFY DURING CONSTRUCTION | | | |
| A. SIZE AND LOCATION OF THE STRUCTURAL ELEMENTS | | X | |
| B. TYPE, SIZE, AND LOCATION OF ANCHORS, INCLUDING OTHER DETAILS OF ANCHORAGE OF THE MASONRY TO STRUCTURAL MEMBERS, FRAMES, OR OTHER CONSTRUCTION | | X | |
| C. WELDING OF REINFORCEMENT IN ACCORDANCE WITH **TABLE 1705.2**, ITEM 5A | -- | -- | |
| D. PREPARATION, CONSTRUCTION, AND PROTECTION OF MASONRY DURING COLD WEATHER (TEMPERATURE BELOW 40ºF) OR HOT WEATHER (TEMPERATURE ABOVE 90ºF) | | X | |
| E. APPLICATION AND MEASUREMENT OF PRESTRESSING FORCE | X | | |
| F. PLACEMENT OF GROUT AND PRESTRESSING GROUT FOR BONDED TENDONS IS IN COMPLIANCE | X | | |
| 5. OBSERVE PREPARATION OF GROUT SPECIMENS, MORTAR SPECIMENS, AND/OR PRISMS. | | X | |
| | | | |
| **1705.6** - SOILS | | | |
| 1. VERIFY MATERIALS BELOW SHALLOW FOOTINGS ARE ADEQUATE TO ACHIEVE THE DESIRED BEARING CAPACITY | | X | |
| 2. VERIFY EXCAVATIONS ARE EXTENDED TO PROPER DEPTH AND HAVE REACHED PROPER MATERIAL | | X | |
| 3. PERFORM CLASSIFICATION AND TESTING OF COMPACTED FILL MATERIALS | | X | |
| 4. VERIFY USE OF PROPER MATERIALS, DENSITIES, AND LIFT THICKNESSES DURING PLACEMENT AND COMPACTION OF COMPACTED FILL | X | | |
| 5. PRIOR TO PLACEMENT OF COMPACTED FILL, INSPECT SUBGRADE AND VERIFY THAT SITE HAS BEEN PREPARED PROPERLY | | X | |
| | | | |
| **1705.11.3** - WIND RESISTING COMPONENTS | | | |
| 1. INSPECT FASTENING OF ROOF COVERINGS, ROOF DECKS, AND FRAMING CONNECTIONS | | X | |
| 2. INSPECT FASTENING OF EXTERIOR WALL COVERINGS AND WALL CONNECTIONS TO ROOF AND FLOOR DIAPHRAGMS AND FRAMING | | X | |
| | | | |
| **1705.12.1** - SEISMIC RESISTANCE - STRUCTURAL STEEL | | | |
| 1. SPECIAL INSPECTIONS OF THE STRUCTURAL STEEL IN THE SEISMIC FORCE-RESISTING SYSTEMS SHALL BE PERFORMED IN ACCORDANCE WITH THE QUALITY ASSURANCE REQUIREMENTS OF AISC 341 | | | |
| 2. SPECIAL INSPECTIONS OF THE STRUCTURAL STEEL ELEMENTS IN THE SEISMIC FORCE RESISTING SYSTEMS OTHER THAN THOSE COVERED ABOVE, INCLUDING STRUTS, COLLECTORS, CHORDS, AND FOUNDATION ELEMENTS SHALL BE PERFORMED IN ACCORDANCE WITH THE QUALITY ASSURANCE REQUIREMENTS OF AISC 341 | | X | |

| VERIFICATION & INSPECTION | C | P | NOTES |
|---|---|---|---|
| **1705.12.5** - SEISMIC RESISTANCE - ARCHITECTURAL COMPONENTS | | | |
| 1. INSPECT ERECTION AND FASTENING OF EXTERIOR CLADDING, INTERIOR AND EXTERIOR NONBEARING WALLS AND INTERIOR AND EXTERIOR VENEER GREATER THAN 30 FEET IN HEIGHT ABOVE GRADE OR WALKING SURFACE | | X | |
| 2. INSPECT ERECTION AND FASTENING OF EXTERIOR CLADDING AND INTERIOR AND EXTERIOR VENEER WEIGHING MORE THAN 5 PSF | | X | |
| 3. INSPECT ERECTION AND FASTENING OF INTERIOR NONBEARING WALLS WEIGHING MORE THAN 15 PSF | | X | |
| | | | |
| **1705.12.6** - SEISMIC RESISTANCE - PLUMBING, MECHANICAL AND ELECTRICAL COMPONENTS | | | |
| 1. INSPECT ANCHORAGE OF ELECTRICAL EQUIPMENT FOR EMERGENCY AND STANDBY POWER SYSTEMS | | X | |
| 2. INSPECT ANCHORAGE OF NON-EMERGENCY ELECTRICAL EQUIPMENT | | X | |
| 3. INSPECT INSTALLATION AND ANCHORAGE OF PIPING SYSTEMS DESIGNED TO CARRY HAZARDOUS MATERIALS AND THEIR ASSOCIATED MECHANICAL UNITS | | X | |
| 4. INSPECT INSTALLATION AND ANCHORAGE OF DUCTWORK DESIGNED TO CARRY HAZARDOUS MATERIALS | | X | |
| 5. INSPECT INSTALLATION AND ANCHORAGE OF VIBRATION ISOLATION SYSTEMS WHERE THE APPROVED CONSTRUCTION DRAWINGS REQUIRE A NOMINAL CLEARANCE OF 1/4" OR LESS BETWEEN THE EQUIPMENT AND SUPPORT STRUCTURE | | X | |
| **1705.12.7** - INSPECT ANCHORAGE OF STORAGE RACKS THAT ARE 8 FEET OR GREATER IN HEIGHT | | X | |
| **1705.12.8** - INSPECT SEISMIC ISOLATION SYSTEMS IN SEISMICALLY ISOLATED STRUCTURES DURING FABRICATION AND INSTALLATION OF ISOLATOR UNITS AND ENERGY DISSIPATION DEVICES | | X | |

COASTAL DEVELOPMENT PERMIT PLANS

| NO. | BY | CHK | APP | DATE | REVISIONS AND RECORD OF USE |
|---|---|---|---|---|---|

Ashley & Vance ENGINEERING, INC
JOINT VENTURE
FILANC
BLACK & VEATCH

CITY OF MORRO BAY
FILANC BLACK & VEATCH DB PROPOSAL
WATER RECLAMATION FACILITY (WRF)

DESIGNED: I. SHOEBRIDGE
DETAILED: S. BENJAMIN
CHECKED: Checker
APPROVED: Approver
DATE: XX/XX/XXXX

0 1/2 1
IF THIS BAR DOES NOT MEASURE 1" THEN DRAWING IS NOT TO FULL SCALE

PROJECT NO. 400530

00-S-003
SHEET OF XXX

PLOTTED: 7/29/2019 7:05:52 PM
D400530

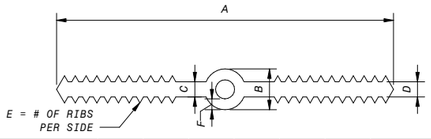


| TYPE | A | B | C | D | E | F | APPLICATION |
|---|---|---|---|---|---|---|---|
| W/O CENTERBULB | 6" | - | 3/8" | 3/8" | 7 | - | SEE NOTES 2 & 6 |
| W/O CENTERBULB | 9" | - | 3/8" | 3/8" | 10 | - | SEE NOTES 2 & 7 |
| CENTERBULB | 6" | 7/8" | 3/8" | 3/8" | 8 | 9/16" | SEE NOTES 4 & 6 |
| CENTERBULB | 9" | 1" | 3/8" | 3/8" | 8 | 1/4" | SEE NOTE 4 |
| CENTERBULB | 9" | 1 1/2" | 3/8" | 1/4" | 8 | 5/16" | SEE NOTE 5 |

NOTES:
1. SEE SPECIFICATIONS FOR MATERIAL REQUIREMENTS. NON-METALLIC WATERSTOPS ARE REQUIRED FOR CONCRETE JOINTS SUBJECTED TO CHLORINATED WATER, SEAWATER, AND WATERBORNE CHEMICALS.
2. FOR CONSTRUCTION JOINTS.
3. SEE SPLICE DETAIL (**1/00-S-101**).
4. FOR EXPANSION/CONTROL JOINTS 1" AND NARROWER.
5. FOR EXPANSION/CONTROL JOINTS WIDER THAN 1".
6. USE 6 INCH WATERSTOPS IN ALL JOINTS IN CONCRETE SECTIONS LESS THAN 12" IN THICKNESS UNLESS SPECIFICALLY SHOWN OTHERWISE.
7. USE 9 INCH WATERSTOPS IN ALL JOINTS IN CONCRETE SECTIONS GREATER THAN 12" IN THICKNESS UNLESS SPECIFICALLY SHOWN OTHERWISE.
8. PVC WATERSTOP MUST MEET OR EXCEED THE PERFORMANCE REQUIRED IN SPECIFICATIONS, INCLUDING THE U.S. ARMY CORPS OF ENGINEERS CRD-C-572-74.
9. WATERSTOPS ARE TO BE PROPERLY POSITIONED PRIOR TO CONCRETE PLACEMENT AND MUST BE SECURELY POSITIONED IN THE FORMS BY TYING OFF THE OUTER EDGE OF THE WATERSTOP TO ADJACENT REINFORCING STEEL.

8 RIBBED PVC WATERSTOP SCHEDULE
NO SCALE

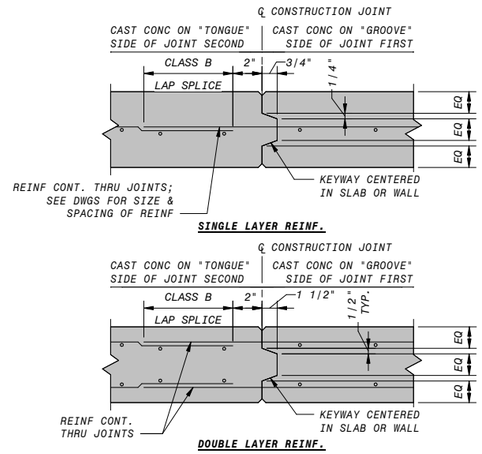


7 CONSTRUCTION JOINT AT WALL OR SLAB (NON-WATER BEARING ONLY)
NO SCALE

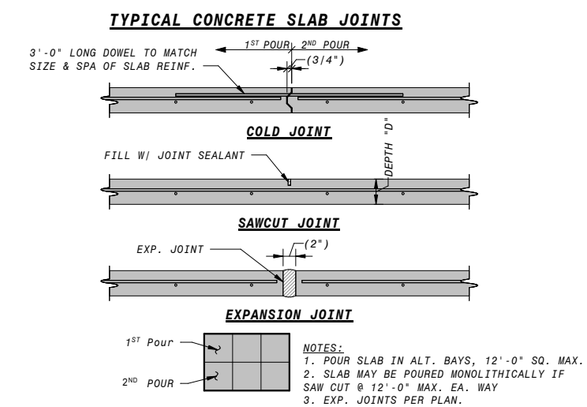


4 TYPICAL CONCRETE SLAB JOINTS
NO SCALE

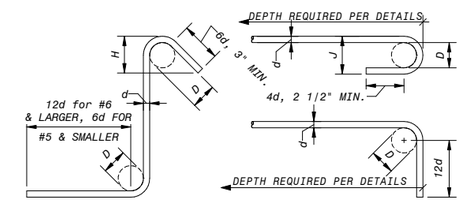


**STANDARD TIES & STIRRUPS**

| BAR SIZE | D | H (APPROX.) |
|---|---|---|
| #3 | 1-1/2" | 3" |
| #4 | 2" | 3" |
| #5 | 2-1/2" | 3-3/4" |
| #6 | 4-1/2" | 4-1/2" |
| #7 | 5-1/4" | 5-1/4" |
| #8 | 6" | 6" |

**STANDARD END HOOKS**

| BAR SIZE | D | J |
|---|---|---|
| #3 | 2-1/4" | 3" |
| #4 | 3" | 4" |
| #5 | 3-3/4" | 5" |
| #6 | 4-1/2" | 6" |
| #7 | 5-1/4" | 7" |
| #8 | 6" | 8" |
| #9 | 9 1/2" | 11 3/4" |
| #10 | 10 3/4" | 1' 1 1/4" |

NOTE:
ALL BAR BEND DIAMETERS & END LENGTHS MUST CONFORM TO THE CRSI MANUAL OF STANDARD PRACTICE

5 TYP. REINFORCEMENT BAR BENDS
NO SCALE

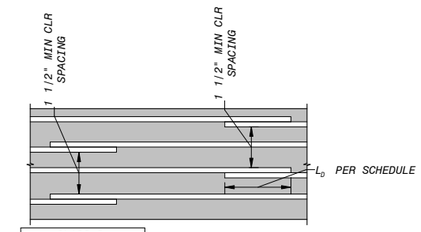


| | BAR SIZE | CLASS B TENSION, $L_D$ LAP SPLICE LENGTH | HOOKED, $L_{DH}$ | |
|---|---|---|---|---|
| TYPICAL - f'c = 3 ksi | #3 | 21" | 9" | VALUES ASSUME 60 KSI, NON-EPOXY REINFORCEMENT & 3 KSI NORMAL WEIGHT CONCRETE |
| | #4 | 28" | 11" | |
| | #5 | 36" | 14" | |
| | #6 | 43" | 17" | |
| | #7 | 62" | 20" | |
| | #8 | 71" | 22" | |
| | #9 | 80" | 25" | |
| | #10 | 89" | 28" | |
| TYPICAL - f'c = 4 ksi | BAR SIZE | TENSION, $L_D$ LAP SPLICE LENGTH | HOOKED, $L_{DH}$ | |
| | #3 | 18" | 8" | VALUES ASSUME 60 KSI, NON-EPOXY REINFORCEMENT & 4 KSI NORMAL WEIGHT CONCRETE |
| | #4 | 25" | 10" | |
| | #5 | 31" | 12" | |
| | #6 | 37" | 15" | |
| | #7 | 54" | 17" | |
| | #8 | 62" | 19" | |
| | #9 | 69" | 22" | |
| | #10 | 77" | 24" | |
| TYPICAL - f'c = 4.5 ksi | BAR SIZE | TENSION, $L_D$ LAP SPLICE LENGTH | HOOKED, $L_{DH}$ | |
| | #3 | 17" | 7" | VALUES ASSUME 60 KSI, NON-EPOXY REINFORCEMENT & 4.5 KSI NORMAL WEIGHT CONCRETE |
| | #4 | 23" | 9" | |
| | #5 | 29" | 12" | |
| | #6 | 35" | 14" | |
| | #7 | 51" | 16" | |
| | #8 | 58" | 18" | |
| | #9 | 65" | 21" | |
| | #10 | 73" | 23" | |

1 STD LAP SPLICES
NO SCALE




NOTE:
1. ALL REINFORCING CONTINUOUS ACROSS JOINT.
2. COORDINATE LOCATIONS WITH EOR PRIOR TO PLACEMENT.

2 WALL VERTICAL CONSTRUCTION JOINT
NO SCALE

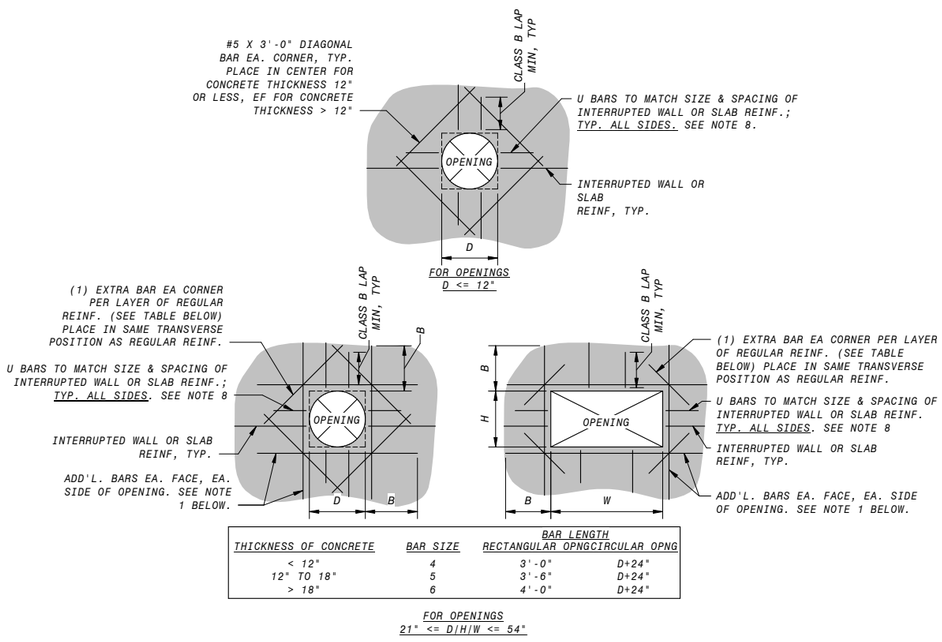


| THICKNESS OF CONCRETE | BAR SIZE | BAR LENGTH RECTANGULAR OPNG | BAR LENGTH CIRCULAR OPNG |
|---|---|---|---|
| < 12" | 4 | 3'-0" | D+24" |
| 12" TO 18" | 5 | 3'-6" | D+24" |
| > 18" | 6 | 4'-0" | D+24" |

FOR OPENINGS
21" <= D/H/W <= 54"

NOTES:
1. 50% OF INTERRUPTED WALL OR SLAB REINF. TO BE PLACED EA. SIDE OF OPENING. BARS TO BE SPACED AT 4" O.C. OR S/2, WHICHEVER IS LESS EA. FACE (S = BAR SPACING PER PLANS). LENGTH OF ADD'L. REINF. = H + W + (2x CLASS B LAP)
2. SEE PLAN AND SECTIONS FOR TYP. REINF., REINF. SPACING AND WALL OR SLAB THICKNESS.
3. ALL WALL AND/OR SLAB OPENINGS TO BE COORDINATED AND DETAILED ON REINF. SHOP DRAWINGS.
4. ADD'L. OPENINGS SHALL NOT BE PROVIDED W/OUT EOR APPROVAL.
5. THIS DETAIL SHALL APPLY AT ALL SIDES OF WALL OR SLAB OPENINGS AND/OR DISCONTINUITIES. APPLICABLE REINF. TO BE SHOWN ON SHOP DRAWINGS.
6. DO NOT CORE HOLES THROUGH STRUCTURAL WALLS OR SLABS WITHOUT PRIOR APPROVAL FROM EOR.
7. 2" CLEAR TO CONCRETE OPENINGS OR OUTSIDE FACE OF PIPES AND PIPE SLEEVES. DO NOT OVERCUT REINFORCEMENT FOR EASIER PLACEMENT OF WEEP RINGS AND FLANGES.
8. U BARS MAY BE REPLACED WITH STRAIGHT BARS AT CONCRETE WITH SINGLE MAT OF REINFORCEMENT.

9 TYP REINF AT WALL OR SLAB OPENINGS (<=54")
NO SCALE

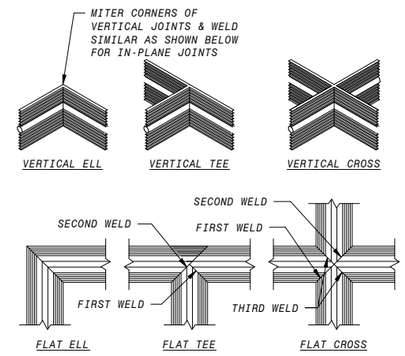


NOTES:
1. ALL WELDS SHALL BE PER WATERSTOP MANUFACTURER'S RECOMMENDATIONS.
2. ALL TRANSITIONS, INTERSECTIONS, AND SPLICES ARE TO BE HEAT WELDED TO MAINTAIN CONTINUITY. FACTORY-MADE FABRICATIONS ARE RECOMMENDED FOR ALL INTERSECTIONS AND CHANGES OF DIRECTION.

6 WATERSTOP JOINTS
NO SCALE

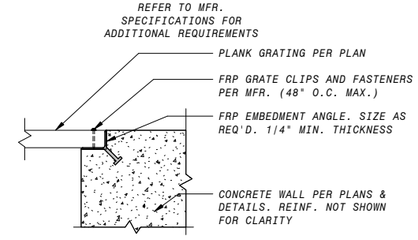


3 PLANK GRATING SEAT
NO SCALE

COASTAL DEVELOPMENT PERMIT PLANS

| NO. | BY | CHK | APP | DATE | REVISIONS AND RECORD OF USE |
|---|---|---|---|---|---|

Ashley&Vance ENGINEERING, INC
JOINT VENTURE
BLACK & VEATCH
FILANC

CITY OF MORRO BAY
FILANC BLACK & VEATCH DB PROPOSAL
WATER RECLAMATION FACILITY (WRF)

STANDARD DETAILS 1
STRUCTURAL

DESIGNED: I. SHOEBRIDGE
DETAILED: S. BENJAMIN
CHECKED: Checker
APPROVED: Approver
DATE: XX/XX/XXXX

0 1/2 1
IF THIS BAR DOES NOT MEASURE 1" THEN DRAWING IS NOT TO FULL SCALE

PROJECT NO. 400530

00-S-101
SHEET OF XXX

PLOTTED: 7/29/2019 7:05:54 PM
D400530

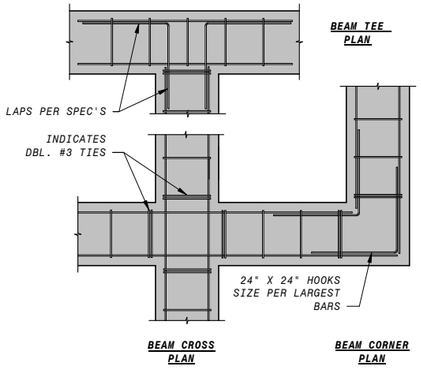


12 BEAM TO BEAM CONECTIONS
NO SCALE

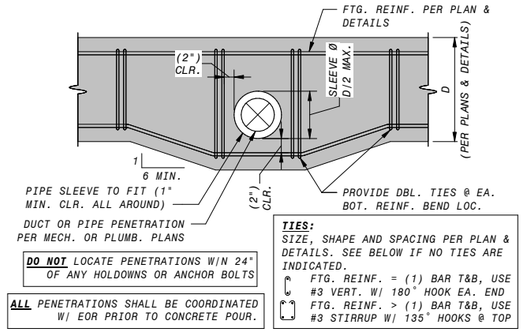


8 TYP. DUCT THROUGH FDN.
NO SCALE

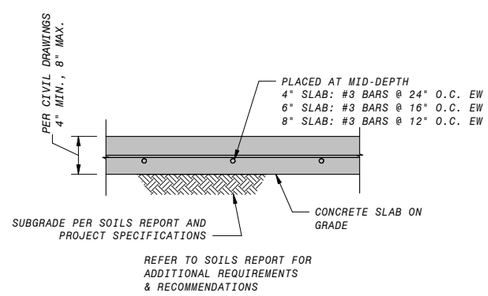


4 TYP CONCRETE STOOP
NO SCALE

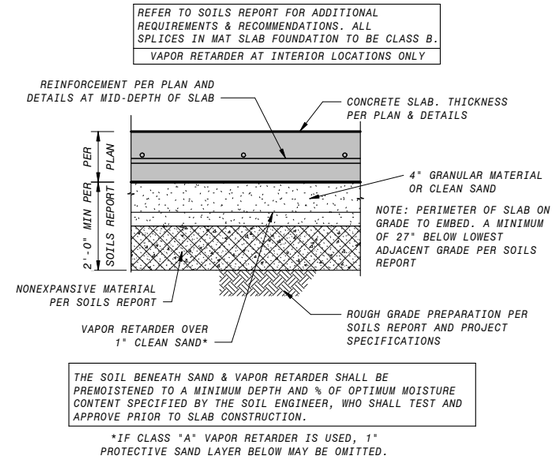


1 TYP. SLAB ON GRADE
NO SCALE

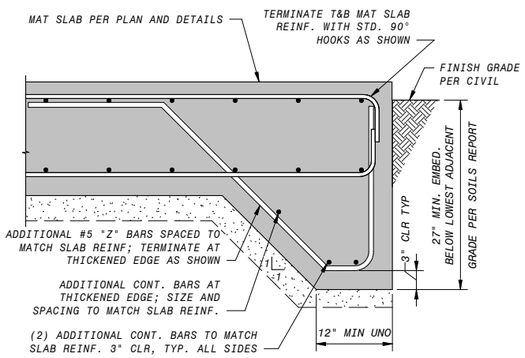


13 TYP THICKENED MAT SLAB EDGE
NO SCALE

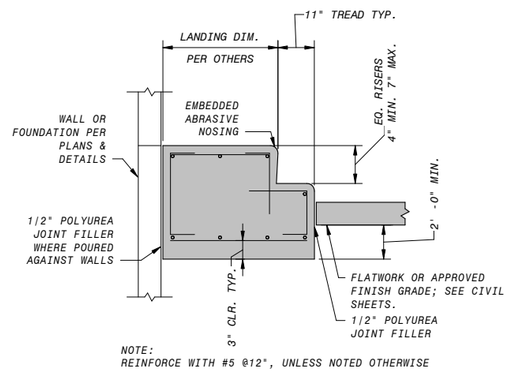


9 CONCRETE STAIR - ON GRADE
NO SCALE

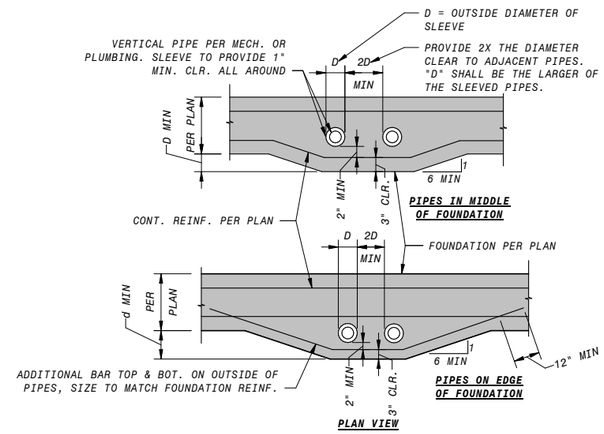


5 TYPICAL VERTICAL PIPES IN FND.
NO SCALE

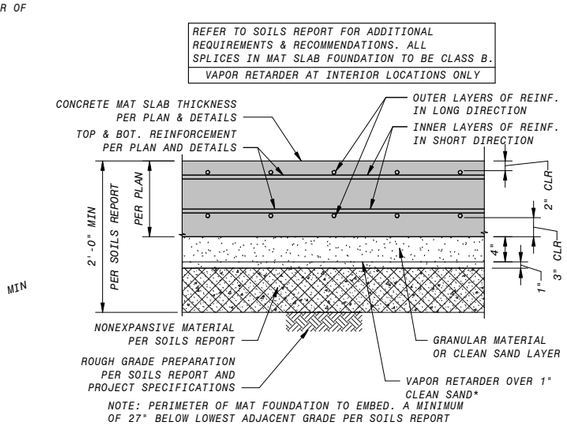


2 TYP. MAT SLAB ON GRADE
NO SCALE

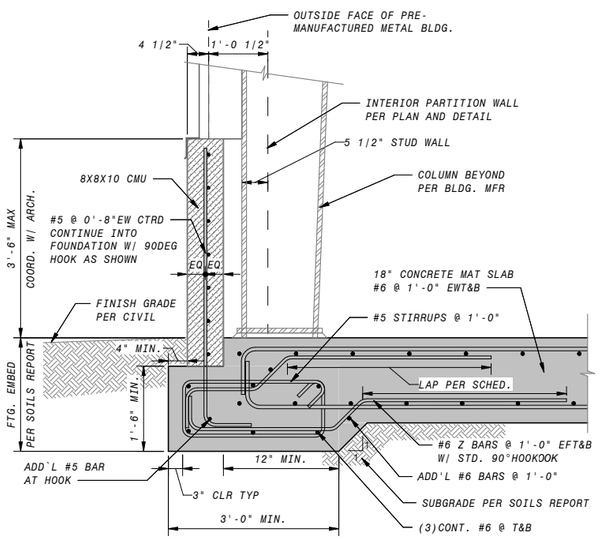


11 TYP. EOS DETAIL
95-S-301 3/4" = 1'-0"

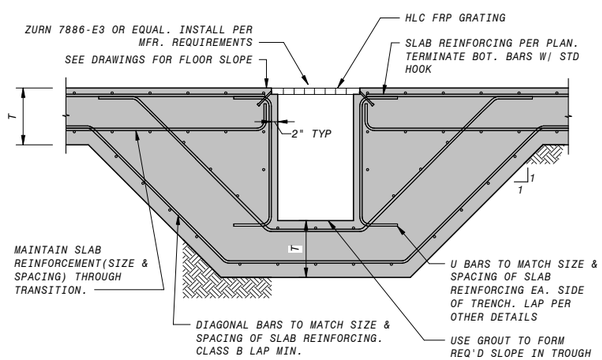


10 DRAIN TROUGH AT MAT SLAB
NO SCALE

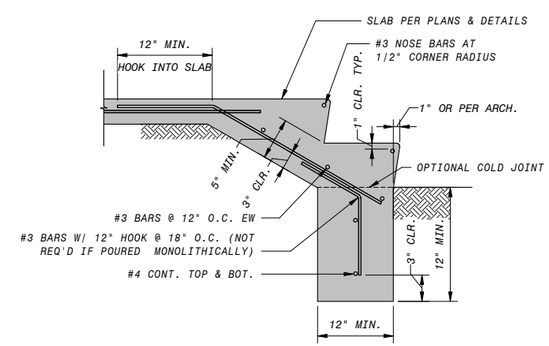


6 CONCRETE STAIR AT LANDING EDGE
NO SCALE

# COASTAL DEVELOPMENT PERMIT PLANS

| NO. | BY | CHK | APP | DATE | REVISIONS AND RECORD OF USE |
|---|---|---|---|---|---|

Ashley & Vance ENGINEERING, INC
JOINT VENTURE
FILANC
BLACK & VEATCH

CITY OF MORRO BAY
FILANC BLACK & VEATCH DB PROPOSAL
WATER RECLAMATION FACILITY (WRF)

STANDARD DETAILS 2
STRUCTURAL

DESIGNED: I. Shoebridge
DETAILED: S. Benjamin
CHECKED: Checker
APPROVED: Approver
DATE: XX/XX/XXXX

0 1/2 1
IF THIS BAR DOES NOT MEASURE 1" THEN DRAWING IS NOT TO FULL SCALE

PROJECT NO. 400530

00-S-102
SHEET OF XXX

PLOTTED: 7/29/2019 7:05:55 PM
D400530

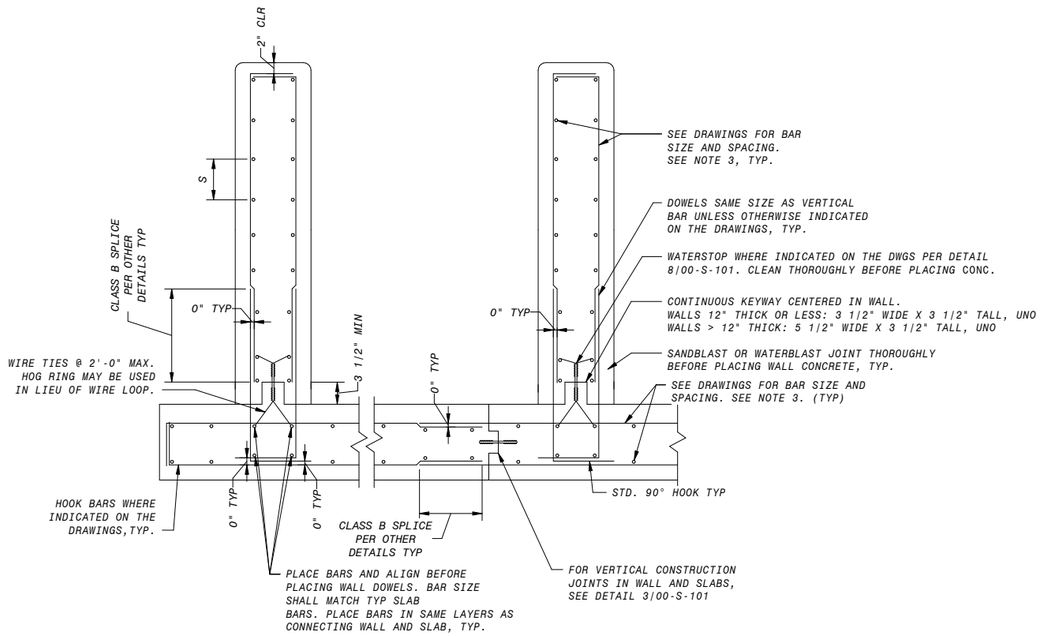


NOTES:
1. "S" = BAR SPACING INDICATED ON THE DRAWINGS.
2. HOOKS SHALL BE ACI STD 90 DEGREE HOOKS.
3. ORIENTATION OF BARS IN LAYERS SHALL BE AS INDICATED ON THE DRAWINGS.

## 2 WALL AND SLAB JOINTS WITH WATERSTOP

NO SCALE

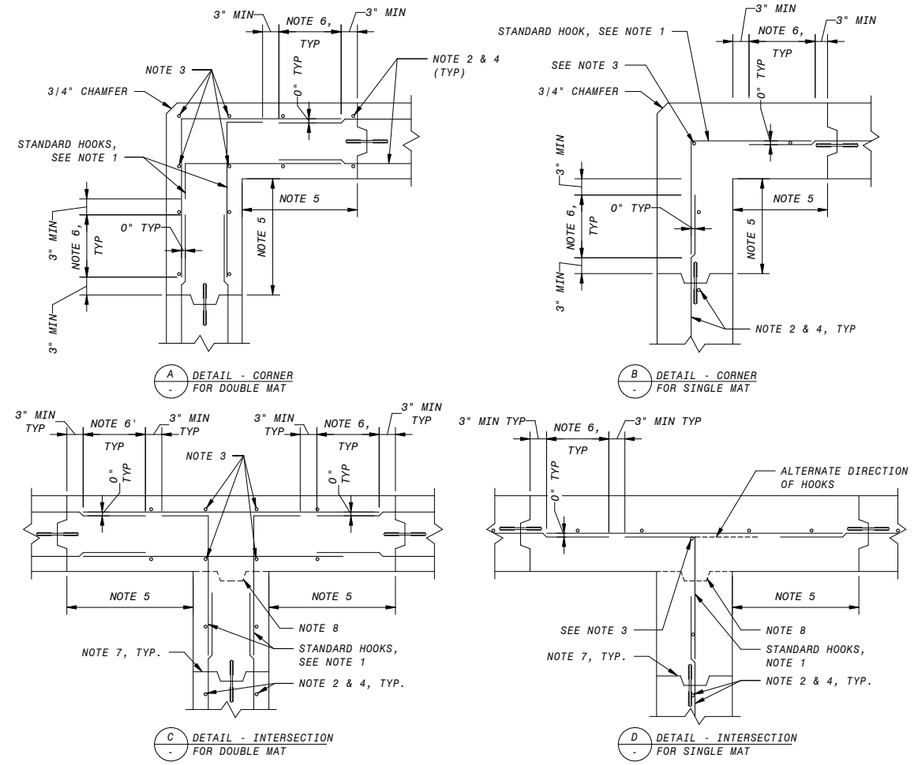


NOTES:
1. HOOKS SHALL BE ACI STANDARD 90-DEGREE HOOKS.
2. ORIENTATION OF BAR LAYERS SHALL BE AS INDICATED ON THE DRAWINGS.
3. BAR SIZE SHALL MATCH LARGEST BARS IN CONNECTING WALL. PLACE BAR IN SAME LAYERS AS CONNECTING WALLS. (TYP)
4. SEE DRAWINGS FOR BAR SIZE AND SPACING.
5. DISTANCE FROM INSIDE CORNER FACE TO NEAREST VERTICAL CONSTRUCTION JOINT. DIMENSION AS DENOTED IN DETAIL WITH 6" MIN AND 30'-0" MAX FOR LIQUID CONTAINING STRUCTURES OR 40'-0" MAX IN OTHER STRUCTURES. AT "T" INTERSECTIONS WHERE A WATERSTOP IS NOT REQUIRED THIS DIMENSION MAY BE ZERO.
6. OPTIONAL SPLICE LOCATION UNO. CLASS B LAP SPLICE PER OTHER DETAILS, MIN.
7. VERTICAL CONSTRUCTION JOINT NEAREST WALL CORNER WITH WATERSTOP AS REQUIRED AT ALL LIQUID CONTAINING STRUCTURES.
8. ALTERNATE VERTICAL CONSTRUCTION JOINT AT "T" INTERSECTIONS WHERE WATERSTOP ARE NOT REQUIRED.

## 1 WALL REINFORCEMENT AT CORNERS AND INTERSECTIONS

NO SCALE

COASTAL DEVELOPMENT PERMIT PLANS

| DATE | REVISIONS AND RECORD OF USE | NO. | BY | CHK | APP |
|---|---|---|---|---|---|

Ashley & Vance ENGINEERING, INC
JOINT VENTURE
FILANC
BLACK & VEATCH

CITY OF MORRO BAY
FILANC BLACK & VEATCH DB PROPOSAL
WATER RECLAMATION FACILITY (WRF)

STANDARD DETAILS 3

DESIGNED: I. SHOEBRIDGE
DETAILED: S. BENJAMIN
CHECKED: Checker
APPROVED: Approver
DATE: XX/XX/XXXX

0 1/2 1
IF THIS BAR DOES NOT MEASURE 1" THEN DRAWING IS NOT TO FULL SCALE

PROJECT NO. 400530

00-S-103
SHEET OF XXX

PLOTTED: 7/29/2019 7:05:56 PM
D400530

**ALL RAILINGS TO BE SIDE MOUNT, UNO. SEE DETAIL 2/00-S-104 FOR TOP MOUNT ANCHORAGE.**

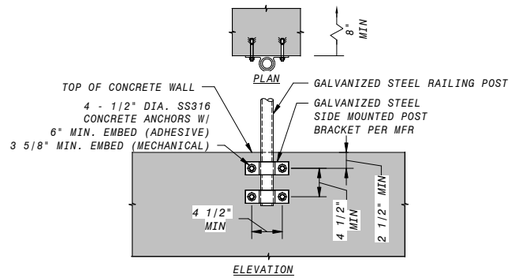


NOTES:
1. DO NOT CUT REINFORCING WITHOUT PRIOR CONSENT FROM EOR
2. ANCHORAGE TO 4000 PSI MIN CONCRETE 2-1/2" MIN EDGE DISTANCE TO ANCHOR.
3. PROVIDE PROTECTION FOR DISSIMILAR METALS AND CONCRETE PER SPECIFICATION
4. CONCRETE ANCHOR SIZE AND EMBEDMENTS CALCULATED FOR HILTI ADHESIVES, RE-500-V3, AND HILTI MECHANICAL ANCHORS KBTZ. IF ALTERNATIVE ANCHOR SYSTEM IS USED, SUBMIT STAMPED CALCULATIONS AND DRAWINGS.
5. CARE TO BE TAKEN NOT TO HIT (E) REINF.
6. USE SIDE MOUNTED POST BRACKET AS A TEMPLATE FOR THE ANCHOR BOLTS

## 6 RAILING POST ANCHORAGE - CONCRETE SIDE MOUNT - GALVANIZED STEEL

NO SCALE

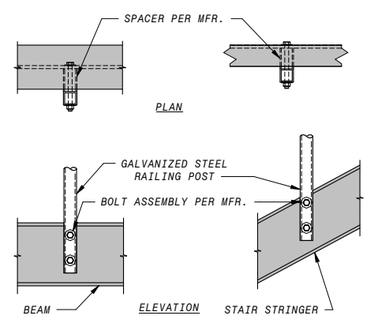


NOTE:
1. PROVIDE PROTECTION FOR DISSIMILAR METALS AND CONCRETE PER SPECIFICATIONS
2. RAILING DESIGN SHALL BE PER MANUFACTURER AND SHALL MEET THE LATEST OSHA AND CBC REQUIREMENTS.

## 7 RAILING POST ANCHORAGE - STEEL SIDE MOUNT - GALVANIZED STEEL

NO SCALE

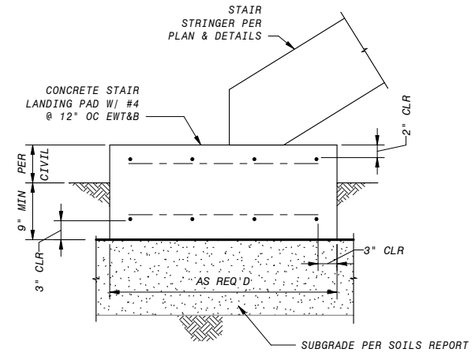


## 4 CONCRETE STAIR LANDING

NO SCALE

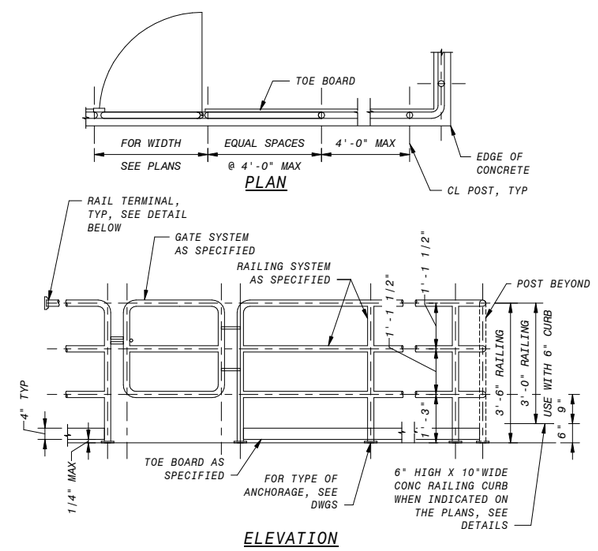


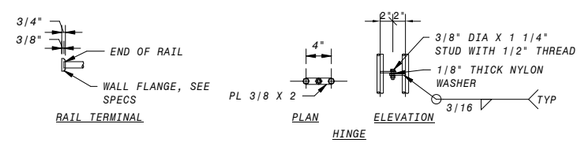


NOTES:
1. FASTEN RAIL TO WALL FLANGE PER MANUFACTURER'S RECOMMENDATIONS.
2. WALL FLANGE TO BE MOUNTED TO WALL WITH (2) 3/8" DIA SS316 WEDGE ANCHORS.
3. AT DESIGN BUILDER'S OPTION, FABRICATE HINGES OR PROVIDE OTHER HINGES AS SPECIFIED.
4. RAILING DESIGN SHALL BE PER MANUFACTURER AND SHALL MEET THE LATEST OSHA AND CBC REQUIREMENTS.

## 5 RAILING - 3 RAIL GALVANIZED STEEL

NO SCALE

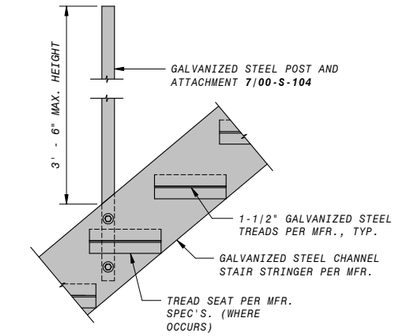


NOTES:
1. STAIR RISER HEIGHT: 4" MIN., 7" MAX. STAIR TREAD DEPTH: 11" MIN. DESIGN-BUILDER TO COORDINATE TREAD RISE/RUN WITH PROPOSED ELEVATIONS AND FIELD CONDITIONS. CORROSION PROTECTION REQUIRED AT DISSIMILAR METALS.
2. GALVANIZED STEEL MFR. TO PROVIDE DETAILED DESIGN AND STANDARDCONNECTION DETAILS. CONNECTION DESIGN SHALL EXCEED THE ULTIMATE CAPACITY OF GALVANIZED STEEL STRINGER.
3. ALL APPLICABLE FACTORS OF SAFETY SHALL BE INCLUDED.

## 1 TYPICAL STAIR TREADS

NO SCALE

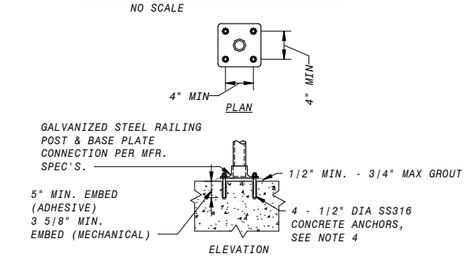


NOTES:
1. DO NOT CUT REINFORCING WITHOUT PRIOR CONSENT FROM ENGINEER
2. ANCHORAGE TO 4000 PSI CONCRETE CURB. 3" MINIMUM EDGE DISTANCE TO ANCHOR
3. PROVIDE PROTECTION FOR DISSIMILAR METALS AND CONCRETE PER SPECIFICATIONS
4. CONCRETE ANCHOR SIZE AND EMBEDMENTS CALCULATED FOR HILTI ADHESIVES, RE-500-V3, AND HILTI MECHANICAL ANCHORS KBTZ. IF ALTERNATIVE ANCHOR SYSTEM IS USED, DESIGN-BUILDER TO SUBMIT STAMPED CALCULATIONS AND DRAWINGS
5. CARE TO BE TAKEN NOT TO HIT (E) REINF.

## 2 RAILING POST ANCHORAGE - TOP MOUNT GALVANIZED STEEL

NO SCALE

NOTES:
1. GALVANIZED STEEL MFR. TO PROVIDE DETAILED DESIGN AND STANDARD CONNECTION DETAILS. CONNECTION DESIGN SHALL EXCEED THE ULTIMATE CAPACITY OF GALVANIZED STEEL STRINGER. ALL APPLICABLE FACTORS OF SAFETY SHALL BE INCLUDED.

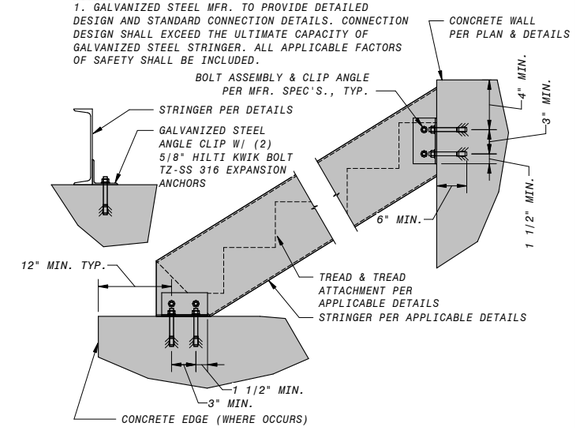


## 3 STRINGER TO CONCRETE

# COASTAL DEVELOPMENT PERMIT PLANS

| DATE | REVISIONS AND RECORD OF USE | NO. | BY | CHK | APP |
|---|---|---|---|---|---|

Ashley & Vance ENGINEERING, INC
JOINT VENTURE
FILANC
BLACK & VEATCH

CITY OF MORRO BAY
FILANC BLACK & VEATCH DB PROPOSAL
WATER RECLAMATION FACILITY (WRF)

STANDARD DETAILS 4
STRUCTURAL

DESIGNED: Designer
DETAILED: Author
CHECKED: Checker
APPROVED: Approver
DATE: XX/XX/XXXX

0 1/2 1
IF THIS BAR DOES NOT MEASURE 1" THEN DRAWING IS NOT TO FULL SCALE

PROJECT NO. 400530

00-S-104
SHEET OF XXX

PLOTTED: 7/29/2019 7:05:57 PM
D400530

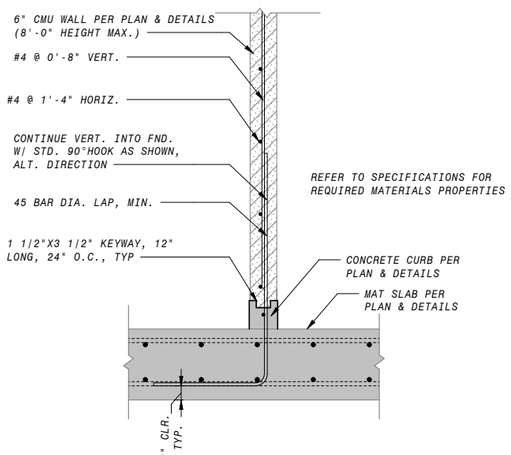


6 CMU SEPARATION WALL

NO SCALE

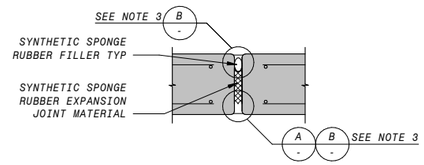


NON-WATER BEARING SLAB OR WALL

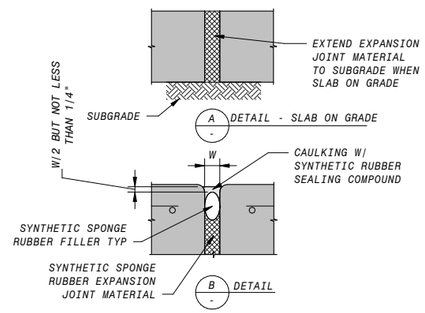


NOTES:
1. FOR WALLS AND EXPOSED SLABS EDGES, FORN ALL JOINT EDGES AT 1/4" CHAMFER.
2. "W" = 1" UNLESS OTHERWISE INDICATED ON THE DRAWINGS. MIN JOINT WIDTH = 3/8".
3. USE DETAIL "A" AT UNDERSIDE OF SLABS ON GRADE ONLY. USE DETAIL "B" AT ALL OTHER LOCATIONS.

5 EXPANSION JOINT

NO SCALE

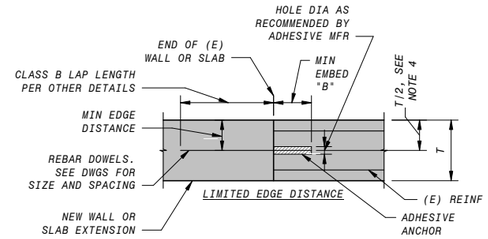


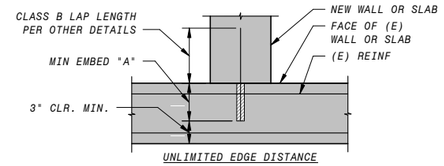


UNLIMITED EDGE DISTANCE

| DOWEL SIZE | MIN EDGE DISTANCE | MIN EMBED A | MIN EMBED B |
|---|---|---|---|
| #3 | 2 5/8" | 5 1/4" | 8 1/4" |
| #4 | 3 1/2" | 7" | 11" |
| #5 | 4 3/8" | 8 3/4" | 13 3/4" |
| #6 | 5 1/4" | 10 1/2" | 16 1/2" |
| #7 | 6 1/8" | 12 1/4" | 19 1/4" |
| #8 | 7" | 14" | 22" |
| #9 | 7 7/8" | 15 3/4" | 24 3/4" |

NOTE:
1. SPECIAL INSPECTION REQUIRED IN ACCORDANCE WITH THE CURRENT EDITION OF THE CALIFORNIA BUILDING CODE AND PRODUCT ESR REPORT.
2. FOLLOW ADHESIVE MANUFACTURER'S INSTRUCTIONS & ESR REPORT FOR INSTALLATION.
3. USE MINIMUM EMBEDMENTS SHOWN, EXCEPT USE MANUFACTURER'S MINIMUM RECOMMENDED EMBEDMENT IF GREATER.
4. LOCATE DOWELS CENTERED IN WALL OR SLAB UNLESS OTHERWISE NOTED ON DRAWINGS. WHERE 2 ROWS OF DOWELS INDICATED, STAGGER SPACING & LOCATE ALTERNATING DOWELS AT MINIMUM EDGE DISTANCE FROM OPPOSITE FACES.
5. CARE SHALL BE TAKEN TO AVOID EXISTING REINFORCEMENT.
6. COORDINATE WITH DESIGN-BUILDER PRIOR TO DOWELING. EDGE DISTANCE AND EMBEDMENT MAY VARY DEPENDING ON CONDITION.
7. ADHESIVE MAY BE HILTI HIT-RE 500 V3 OR SIMPSON SET-3G.
8. CONFORM TO THE REQUIREMENTS OF SPECIFICATION SECTION 03215, DOWELING FOR CONCRETE.

3 ADHESIVE DOWELS

NO SCALE

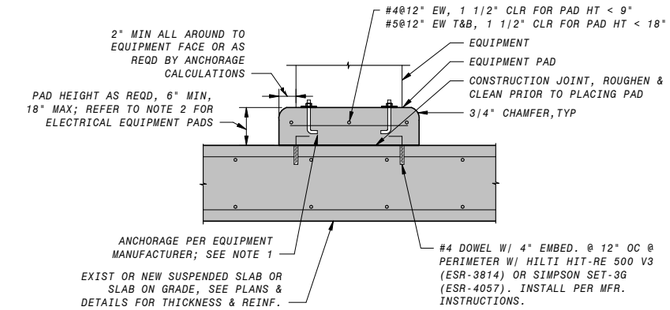


NOTES:
1. EQUIPMENT MANUFACTURER TO PROVIDE ANCHORAGE DESIGN INTO EQUIPMENT PAD AS SHOWN. INSTALL PER MANUFACTURER RECOMMENDATIONS. ALL POST-INSTALLED ANCHOR TO BE DESIGNED WITH HILTI HIT-RE 500 V3 OR SIMPSON SET-3G EPOXY, INSTALLED PER MANUFACTURER SPECIFICATIONS. ALL ANCHORS ARE TO BE 316 STAINLESS STEEL THREADED ROD OR 316 STAINLESS STEEL EXPANSION ANCHORS.
2. CONCRETE PADS FOR ELECTRICAL EQUIPMENT SHALL BE 4" HIGH, UNLESS NOTED OTHERWISE.
3. PAD SIZE SHALL BE MINIMUM INDICATED OR AS SHOWN ON THE PLANS OR AS INDICATED BY THE MANUFACTURER AND APPROVED BY THE DESIGN-BUILDER.
4. THE SIZE, NUMBER, TYPE, LOCATION, AND THREAD PROJECTION OF THE ANCHOR BOLTS SHALL BE DETERMINED BY THE EQUIPMENT MANUFACTURER. ANCHOR BOLTS SHALL BE HELD IN POSITION WITH A TEMPLATE OR OTHER ACCEPTABLE MEANS, MATCHING THE BASE PLATE, WHILE PAD IS BEING PLACED.
5. EQUIPMENT BASES SHALL BE INSTALLED LEVEL UNLESS INDICATED OTHERWISE
6. WEDGES, SHIMS, OR LEVELING NUTS SHALL BE USED TO SUPPORT THE BASE WHILE THE NON-SHRINK GROUT IS PLACED. WEDGES OR SHIMS THAT ARE LEFT IN PLACE SHALL NOT BE EXPOSED TO VIEW.
7. WHERE EQUIPMENT OR PIPING ELEVATION REQUIRE A PAD HEIGHT LESS THAN THE MINIMUM SHOWN, CONSULT WITH DESIGN-BUILDER.
8. 1 1/2" MAX., HIGH-STRENGTH, NON-SHRINK GROUT (WHERE REQUIRED) IS PERMITTED.

1 TYP CONCRETE EQUIPMENT PAD

NO SCALE

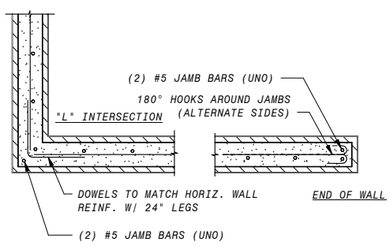


8 TYP CMU WALL INTERSECTIONS

NO SCALE

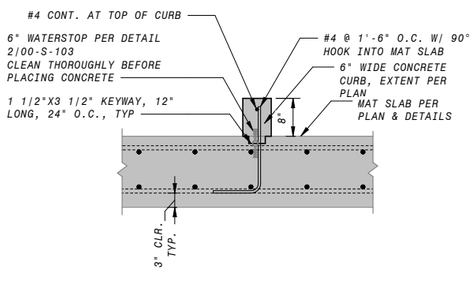


7 CONCRETE CURB AT MAT SLAB

NO SCALE

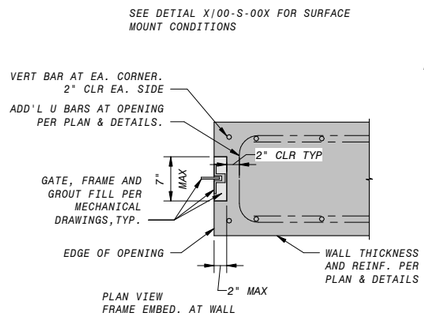


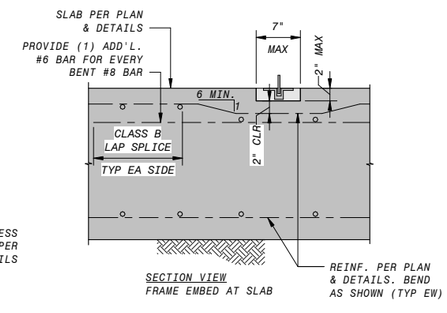


4 EMBEDDED GATE FRAME DETAILS

NO SCALE

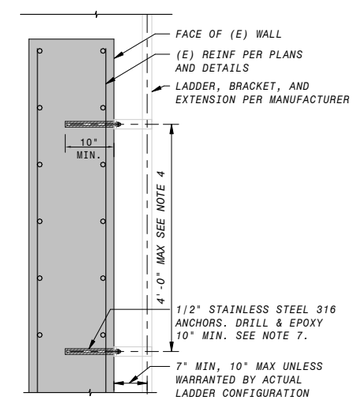


NOTE:
1. SPECIAL INSPECTION REQUIRED IN ACCORDANCE WITH THE CURRENT EDITION OF THE CALIFORNIA BUILDING CODE AND PRODUCTS ESR REPORT.
2. FOLLOW ADHESIVE MANUFACTURER'S INSTRUCTIONS & ESR REPORT FOR INSTALLATION.
3. USE MINIMUM EMBEDMENTS SHOWN, EXCEPT USE MANUFACTURER'S MINIMUM RECOMMENDED EMBEDMENT IF GREATER.
4. IF LADDER CONFIGURATION REQUIRES A GREATER DISTANCE BETWEEN SUPPORTS THAN INDICATED ON TYPICAL DETAILS, THE LADDER SUPPLIER SHALL DESIGN THE LADDER, LADDER BRACKET, AND LADDER BRACKET CONNECTIONS FOR THE INDICATED SPAN IN ACCORDANCE WITH NOTE 6 BELOW.
5. CARE SHALL BE TAKEN TO AVOID EXISTING REINFORCEMENT.
6. ALL LADDERS SHALL BE DESIGNED AND FABRICATED BY LADDER SUPPLIER IN CONFORMANCE WITH THE LATEST ISSUE OF OASHA/ANSI A14.3, SECTION 1910.27 APPLICABLE BUILDING CODE STANDARDS FOR FIXED WALL LADDERS, AND REQUIREMENTS OF THE CONTRACT DRAWINGS AND SPECIFICATIONS. GENERAL CONFIGURATION AND DETAILS SHALL CONFORM WITH THIS DRAWING. ALL LADDERS TO BE GALVANIZED, UNO.
7. ADHESIVE MAY BE HILTI HIT-RE 500 V3 OR SIMPSON SET-3G.
8. CONFORM TO THE REQUIREMENTS OF SPECIFICATION SECTION 05 81 00, ANCHORAGE IN CONCRETE AND MASONRY.

2 LADDER ATTACHMENT

NO SCALE

COASTAL DEVELOPMENT PERMIT PLANS

| NO. | BY | CHK | APP | DATE | REVISIONS AND RECORD OF USE |
|---|---|---|---|---|---|

Ashley & Vance ENGINEERING, INC

JOINT VENTURE

FILANC

BLACK & VEATCH

CITY OF MORRO BAY
FILANC BLACK & VEATCH DB PROPOSAL
WATER RECLAMATION FACILITY (WRF)

STANDARD DETAILS 5
STRUCTURAL

DESIGNED: Designer
DETAILED: Author
CHECKED: Checker
APPROVED: Approver
DATE: XX/XX/XXXX

0 1/2 1
IF THIS BAR DOES NOT MEASURE 1" THEN DRAWING IS NOT TO FULL SCALE

PROJECT NO. 400530

00-S-105
SHEET
OF XXX

PLOTTED: 7/29/2019 7:05:58 PM
D400530

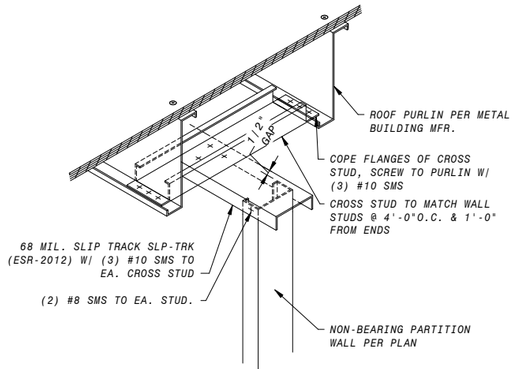


| WALL SCHEDULE AT TYPICAL INTERIOR PARTITIONS | | | | |
|---|---|---|---|---|
| WALL | MAX. HT. | SIZE | GRADE | SPACING |
| Typ Interior Wall | 15'-0" | 362S137-43 | 33 ksi | 24" oc |
| | 22'-0" | 362S162-54 | 50 ksi | 12" oc |
| Plumbing Wall | 22'-0" | 600S162-43 | 33 ksi | 24" oc |

Notes:
1. BRACING REQUIRED AT 48" OC IF NOT SHEATHED FULL HEIGHT BOTH SIDES.
2. WALL DESIGN BASED ON **5psf LATERAL LOAD** AND **L/240** DEFLECTION LIMIT.

## 8 TOP OF STEEL STUD WALL SUPPORT
NO SCALE

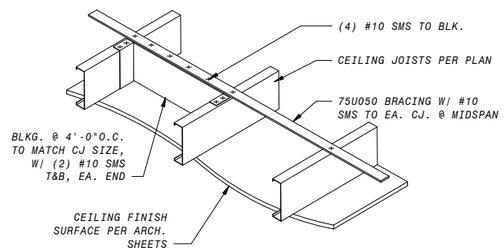


## 5 TYPICAL CEILING JOIST BRACING
NO SCALE

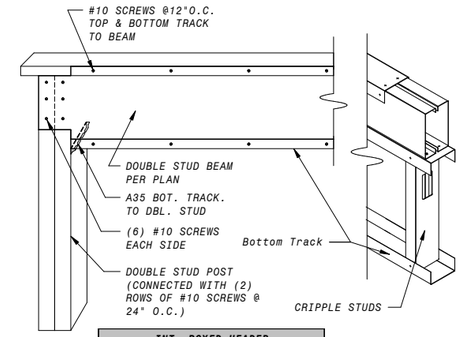


| INT. BOXED HEADER SCHEDULE | | |
|---|---|---|
| Max. Span | Size | Grade |
| 6'-0" | (2) 550S162-43 | 33 ksi |
| 10'-0" | (2) 600S162-43 | 33 ksi |

Notes:
1. WEB STIFFENERS REQUIRED AT ENDS.

## 3 TYPICAL HEADER
NO SCALE

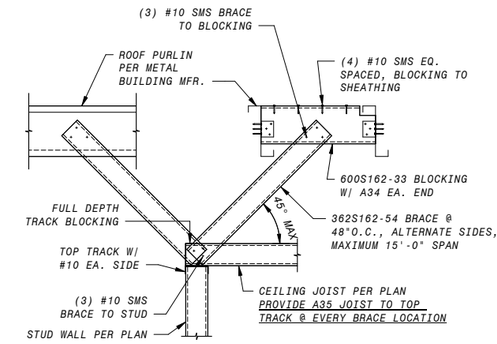


| WALL SCHEDULE AT TYPICAL INTERIOR PARTITIONS | | | | |
|---|---|---|---|---|
| WALL | MAX HT | SIZE | GRADE | SPACING |
| TYP INTERIOR WALL | 15'-0" | 362S137-43 | 33 ksi | 24" OC |
| PLUMBING WALL | 15'-0" | 600S162-43 | 33 ksi | 24" OC |

NOTES:
1. BRACING REQUIRED AT 48" OC IF NOT SHEATHED FULL HEIGHT BOTH SIDES.
2. WALL DESIGN BASED ON **5psf LATERAL LOAD** AND **L/240** DEFLECTION LIMIT.

## 1 TOP OF WALL BRACING
NO SCALE

Note:
1. Load Bearing Studs Must Be Seated Tight To Track Web (Max. Gap Of 1/16")
2. For use with interior walls only.

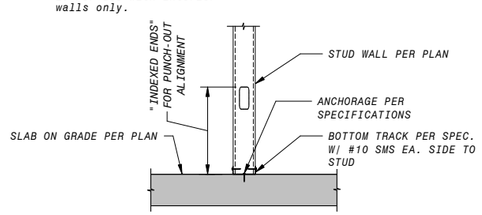


## 6 BOTTOM OF WALL TO SLAB ON GRADE
NO SCALE

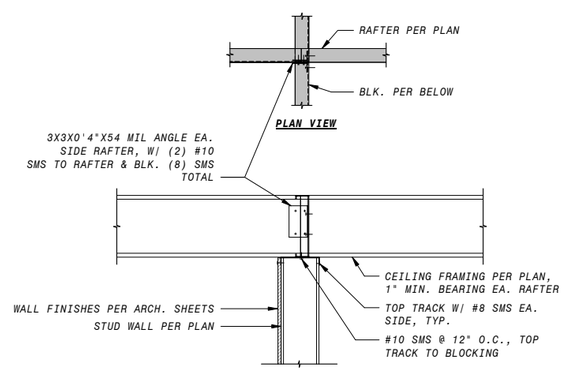


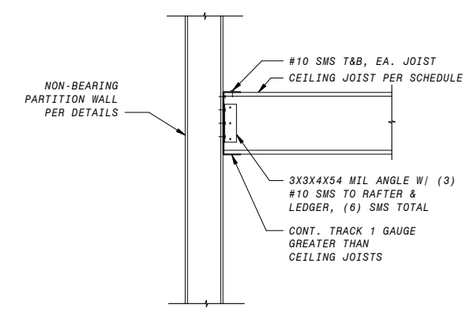


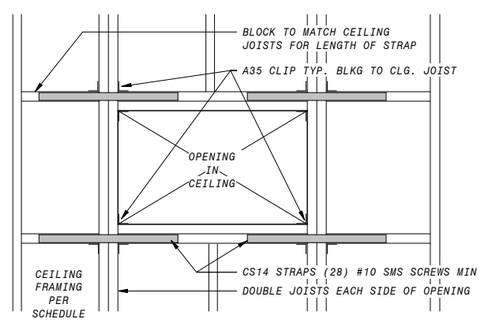


## 7 TYPICAL BLOCKOUT FRAMING
NO SCALE

| CEILING JOIST SCHEDULE (MAX SPAN, FT-IN) | | |
|---|---|---|
| SECTION (SSMA) | Fy (ksi) | ALLOWABLE SPAN |
| 600S162-43 | 33 | 16'-0" |
| 1200S200-54 | 50 | 25'-0" |

Notes:
1. JOIST DESIGN BASED ON **8psf TOTAL DEAD LOAD** (2 LAYER GYP WALL BOARD), **5psf LIVE LOAD** (NON-ACCESSIBLE) AND **L/240** DEFLECTION LIMIT.
2. 1" MINIMUM BEARING REQUIRED AT EACH END.
3. WEB PUNCHOUTS MAY NOT OCCUR NEAR SUPPORTS.
4. STORAGE LOADING NOT PERMITTED.
5. MAXIMUM SPANS BASED ON **24" OC SPACING**.
6. WEB STIFFENERS REQUIRED AT ENDS.
7. BRACING REQUIRED AT MIDSPAN FOR SPANS >14'

## 4 RAFTERS TO INTERIOR WALL
NO SCALE

| CEILING JOIST SCHEDULE (MAX SPAN, FT-IN) | | |
|---|---|---|
| SECTION (SSMA) | Fy (ksi) | ALLOWABLE SPAN |
| 600S162-43 | 33 | 16'-0" |
| 1200S200-54 | 50 | 25'-0" |

NOTES:
1. JOIST DESIGN BASED ON **8psf TOTAL DEAD LOAD**(2 LAYER GYP WALL BOARD), **5psf LIVE LOAD** (NON-ACCESSIBLE) AND **L/240** DEFLECTION LIMIT.
2. 1" MINIMUM BEARING REQUIRED AT EACH END.
3. WEB PUNCHOUTS MAY NOT OCCUR NEAR SUPPORTS.
4. STORAGE LOADING NOT PERMITTED.
5. MAXIMUM SPANS BASED ON **24" OC SPACING**.
6. WEB STIFFENERS REQUIRED AT ENDS.
7. BRACING REQUIRED AT MIDSPAN FOR SPANS > 14'

## 2 CEILING JOIST TO STUD WALL
NO SCALE

# COASTAL DEVELOPMENT PERMIT PLANS

| NO. | BY | CHK | APP | REVISIONS AND RECORD OF USE | DATE |
|---|---|---|---|---|---|

Ashley & Vance ENGINEERING, INC
JOINT VENTURE
FILANC
BLACK & VEATCH

CITY OF MORRO BAY
FILANC BLACK & VEATCH DB PROPOSAL
WATER RECLAMATION FACILITY (WRF)

STANDARD DETAILS 6
STRUCTURAL

DESIGNED: I. SHOEBRIDGE
DETAILED: S. BENJAMIN
CHECKED: Checker
APPROVED: Approver
DATE: XX/XX/XXXX

0 1/2 1
IF THIS BAR DOES NOT MEASURE 1" THEN DRAWING IS NOT TO FULL SCALE

PROJECT NO. 400530

00-S-106
SHEET OF XXX

PLOTTED: 7/29/2019 7:05:59 PM
D400530

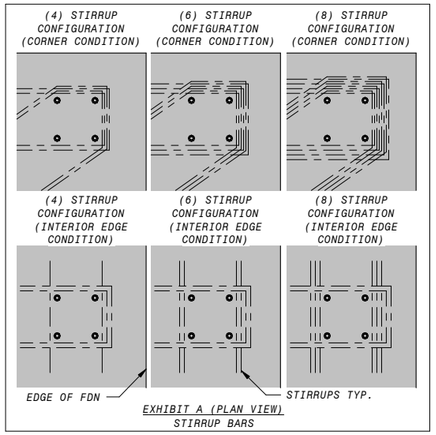


EXHIBIT A (PLAN VIEW)
STIRRUP BARS

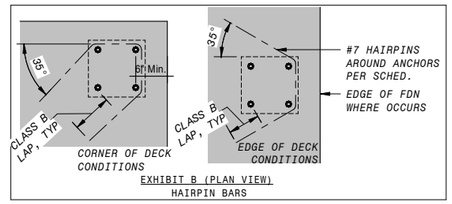


EXHIBIT B (PLAN VIEW)
HAIRPIN BARS

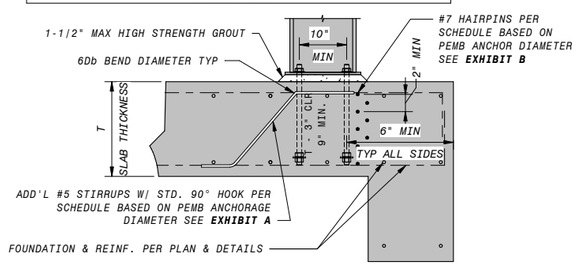


2 ADD'L REINFORCEMENT AT PEMB ANCHORAGE
95-S-101 NO SCALE

| ADD'L REINFORCEMENT SCHEDULE | | |
|---|---|---|
| ANCHOR DIAMETER | NO. OF STIRRUPS (#5) | NO. OF HAIRPINS (#7) |
| 5/8" | 4 | 3 |
| 3/4" | 4 | 4 |
| 7/8" | 6 | 5 |
| 1" | 8 | 7 |

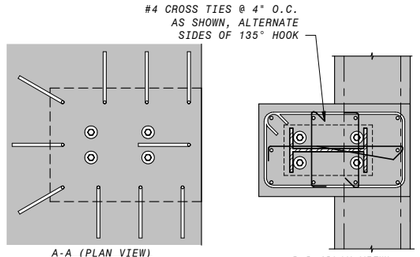


A-A (PLAN VIEW)
HOOK ORIENTATION

B-B (PLAN VIEW)
TIE & CROSSTIE ORIENTATION

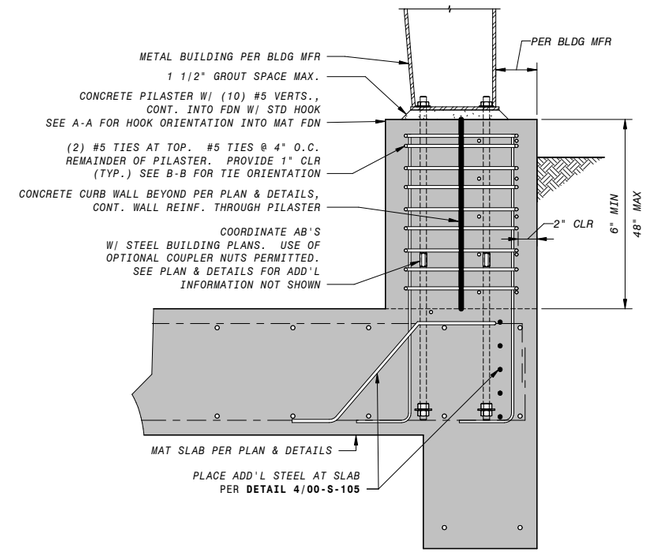


SECTION VIEW

1 STEEL FRAME AT CONCRETE PILASTER
NO SCALE

| DATE | REVISIONS AND RECORD OF USE | NO. | BY | CHK | APP |
|---|---|---|---|---|---|

Ashley & Vance ENGINEERING, INC
JOINT VENTURE
FILANC
BLACK & VEATCH

CITY OF MORRO BAY
FILANC BLACK & VEATCH DB PROPOSAL
WATER RECLAMATION FACILITY (WRF)

STANDARD DETAILS 7
STRUCTURAL

DESIGNED: I. SHOEBRIDGE
DETAILED: S. BENJAMIN
CHECKED: Checker
APPROVED: Approver
DATE: XX/XX/XXXX

0 1/2 1
IF THIS BAR DOES NOT MEASURE 1" THEN DRAWING IS NOT TO FULL SCALE

PROJECT NO.
400530

00-S-107
SHEET
OF XXX

COASTAL DEVELOPMENT PERMIT PLANS

PLOTTED: 7/29/2019 7:05:59 PM
D400530

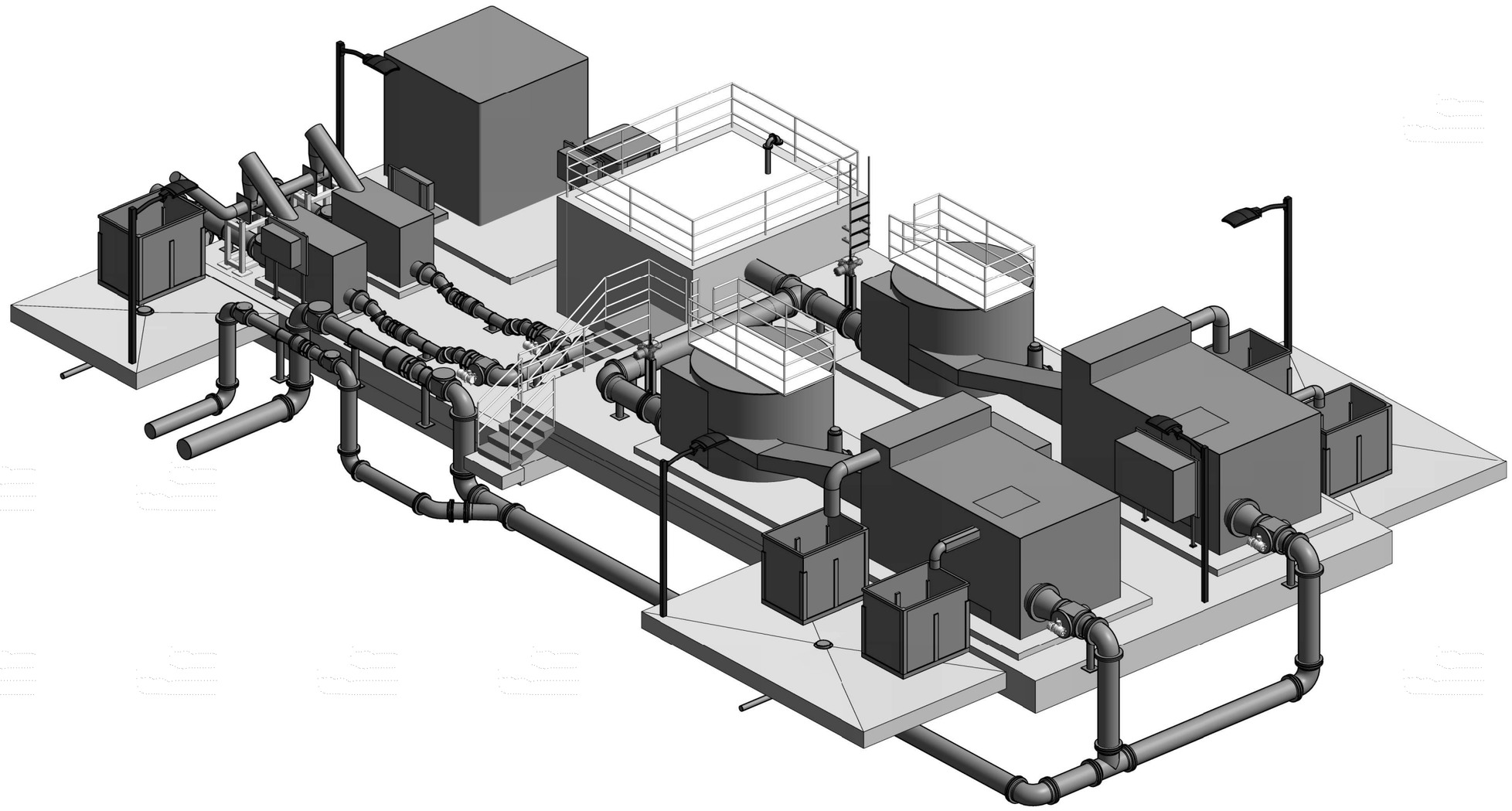

3D VIEW

COASTAL DEVELOPMENT PERMIT PLANS

| DATE | REVISIONS AND RECORD OF USE | NO. | BY | CHK | APP |
|---|---|---|---|---|---|

Ashley & Vance ENGINEERING, INC

JOINT VENTURE

FILANC® BLACK & VEATCH

CITY OF MORRO BAY
FILANC BLACK & VEATCH DB PROPOSAL
RECLAMATION FACILITY (WRF)

HEADWORKS AREA
STRUCTURAL
3D VIEWS

DESIGNED: I, SHOEBRIDGE
DETAILED: S. BENJAMIN
CHECKED: Checker
APPROVED: Approver
DATE:

0 1/2 1

IF THIS BAR DOES NOT MEASURE 1" THEN DRAWING IS NOT TO FULL SCALE

PROJECT NO.
400530

20-S-001
SHEET
OF

PLOTTED: 7/29/2019 4:44:16 PM
D400530

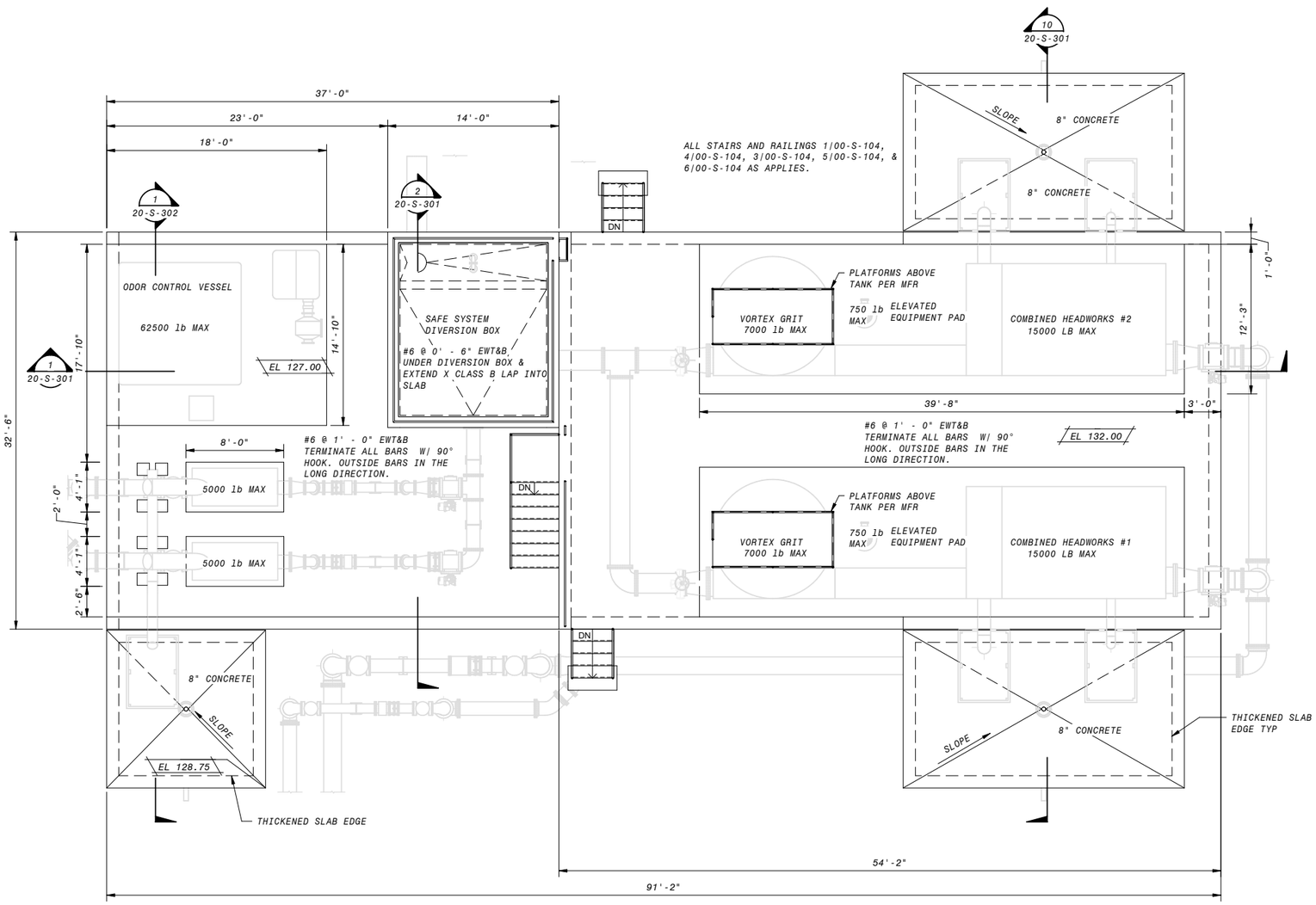


FLOOR PLAN

3/16" = 1'-0"

## GENERAL NOTES

1. PLEASE SEE SOILS REPORT FOR ADDITIONAL SPECIFICATIONS AND RECOMMENDATIONS. IT IS THE DESIGN-BUILDER'S RESPONSIBILITY TO OBTAIN A COPY OF THE SOILS REPORT FROM THE OWNER OR OWNERS REPRESENTATIVE.
2. SEE GENERAL NOTES & SPECIFICATIONS FOR ADDITIONAL REQUIRMENTS AND MATERIAL SPECIFICATIONS.
3. VERIFY ALL DIMENSIONS PRIOR TO COMMENCEMENT OF CONSTRUCTION.
4. ALL LAP SPLICES TO BE CLASS B PER DETAIL 1/00-S-004
5. SUBMIT EQUIPMENT WEIGHT FOR REVIEW PRIOR TO INSTALLATION. SEE DETAIL 1/00-S-008 FOR TYPICAL EQUIPMENT PADS. LOCATION AND SIZE OF EQUIPMENT PADS TO BE COORDINATED WITH MECHANICAL/ELECTRICAL/PLUMBING DRAWINGS. EQUIPMENT ANCHORAGE PER PROJECT SPECIFICATIONS.
6. REFER TO MECHANICAL/ELECTRICAL/PLUMBING DRAWINGS FOR SIZE AND LOCATIONS OF PIPE PENETRATIONS AND WALL OPENINGS. SEE DETAIL 9/00-S-004 FOR TYPICAL REINFORCEMENT REQUIREMENTS. COORDINATE PIPE PENETRATION SEAL WITH MECHANICAL ENGINEER OF RECORD.

4' 2' 0' 4' 8'

1/4" = 1'-0"

COASTAL DEVELOPMENT PERMIT PLANS

| NO. | BY | CHK | APP | DATE | REVISIONS AND RECORD OF USE |
|---|---|---|---|---|---|

Ashley & Vance ENGINEERING, INC

JOINT VENTURE

FILANC BLACK & VEATCH

CITY OF MORRO BAY
FILANC BLACK & VEATCH DB PROPOSAL
RECLAMATION FACILITY (WRF)

HEADWORKS AREA
STRUCTURAL
PLAN

DESIGNED: I. SHOEBRIDGE
DETAILED: S. BENJAMIN
CHECKED: Checker
APPROVED: Approver
DATE:

0 1/2 1

IF THIS BAR DOES NOT MEASURE 1" THEN DRAWING IS NOT TO FULL SCALE

PROJECT NO.
400530

20-S-101
SHEET
OF

PLOTTED: 7/29/2019 4:44:17 PM

D400530

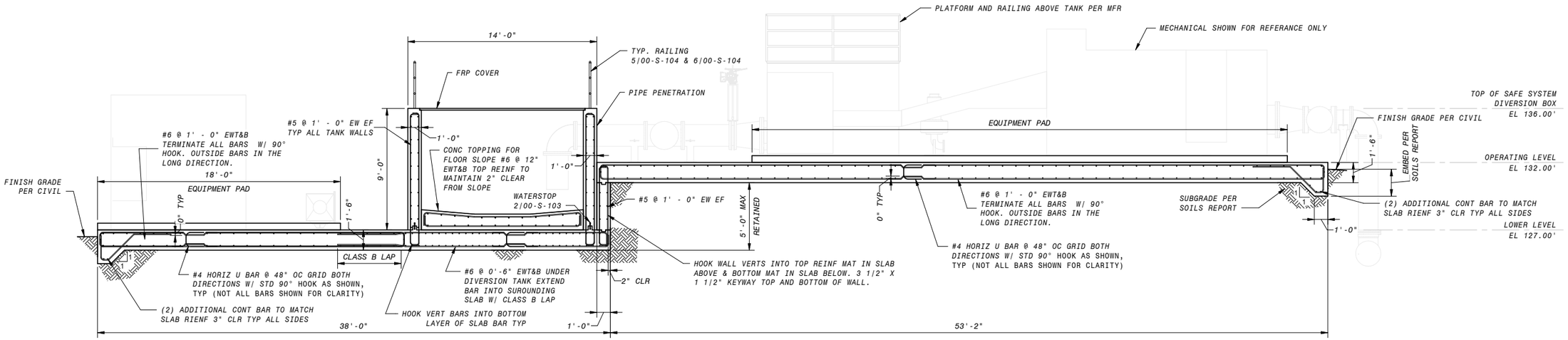


1 SECTION
20-S-101 1/4" = 1'-0"

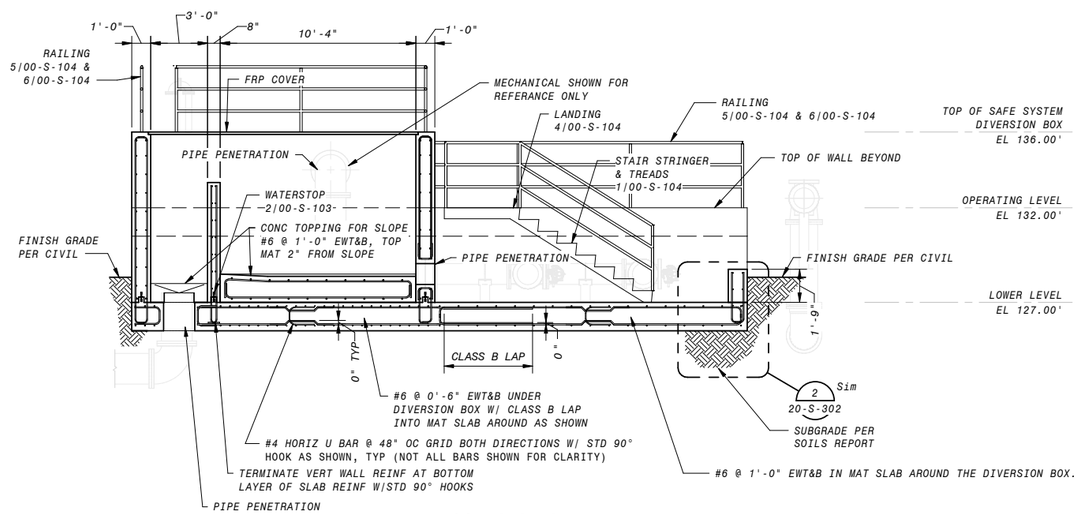


2 SECTION
20-S-101 1/4" = 1'-0"

## GENERAL SECTION NOTES

1. FOR GENERAL STRUCTURAL NOTES, SEE SHEETS 00-S-002 AND STANDARD SPECIFICATIONS.
2. AT WALLS 12" THICK OR LESS, PROVIDE A 6" WATERSTOP, UNO. AT WALLS GREATER THAN 12" THICK, PROVIDE A 9" WATERSTOP, UNO. REFER TO DETAIL 2 ON SHEET 00-S-006.
3. REINFORCEMENT CLEAR COVER TO BE 2" EF FOR WALLS, 2" AT TOP OF SLABS, AND 3" AT BOTTOM OF SLABS, TYP., UNO
4. PROVIDE COMPLETE DESIGN PACKAGE FOR FRP COVER|GRATING (AND ACCESS HATCH, WHERE OCCURS) SIGNED BY A REGISTERED PROFESSIONAL ENGINEER TO THE EOR FOR REVIEW AND APPROVAL. MINIMUM DESIGN CRITERIA MUST INCLUDE: 60PSF UNIFORM DISTRIBUTED LIVE LOAD, 300LB CONCENTRATED LIVE LOAD, AND LESSER OF L/120 OR 3/8" DEFLECTION. SEE DETAIL 3/00-S-004 FOR ADDITIONAL INFORMATION AT GRATING SUPPORT.
5. ALL LAP SPLICES TO BE CLASS B PER DETAIL 1/00-S-004.
6. REFER TO MECHANICAL DRAWINGS FOR SIZE AND LOCATIONS OF PIPE PENETRATIONS AND WALL OPENINGS. SEE DETAIL 9/00-S-004 FOR TYPICAL REINFORCEMENT REQUIREMENTS. COORDINATE PIPE PENETRATION SEAL WITH EOR (WHERE OCCURS).
7. PROVIDE GATE PER MECHANICAL DRAWINGS. COORDINATE OPENING SIZE WITH EOR.
8. COORDINATE EQUIPMENT WEIGHT WITH EOR PRIOR TO INSTALLATION. SEE DETAIL 1/00-S-008 FOR TYPICAL EQUIPMENT ANCHORAGE AND EQUIPMENT PADS.

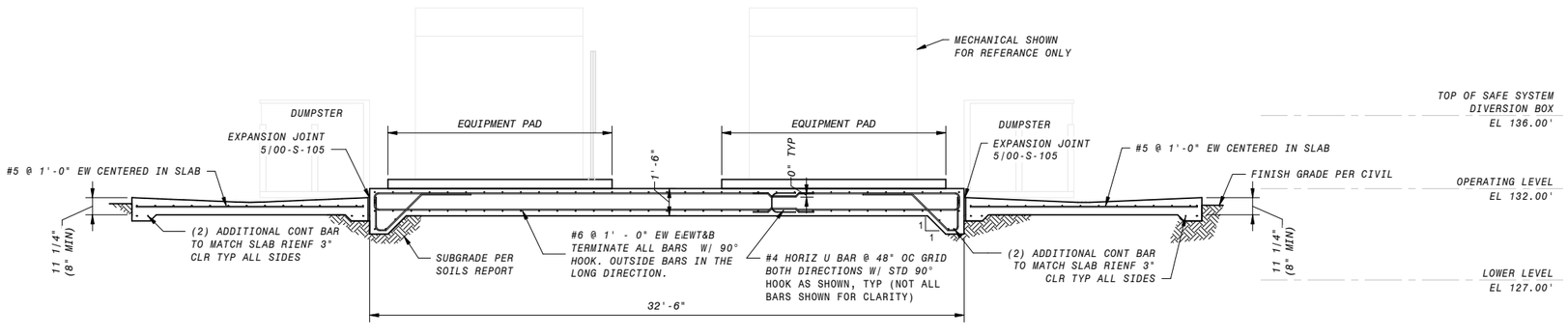


10 SECTION
20-S-101 1/4" = 1'-0"

6" 4' 2' 0' 5' 10'
3/16" = 1'-0"

# COASTAL DEVELOPMENT PERMIT PLANS

| NO. | BY | CHK | APP | REVISIONS AND RECORD OF USE | DATE |
|---|---|---|---|---|---|

Ashley & Vance ENGINEERING, INC
JOINT VENTURE
FILANC
BLACK & VEATCH

CITY OF MORRO BAY
FILANC BLACK & VEATCH DB PROPOSAL
RECLAMATION FACILITY (WRF)

HEADWORKS AREA
STRUCTURAL
SECTIONS & DETAILS 1

DESIGNED: I. SHOEBRIDGE
DETAILED: S. BENJAMIN
CHECKED: Checker
APPROVED: Approver
DATE:

0 1/2 1
IF THIS BAR DOES NOT MEASURE 1" THEN DRAWING IS NOT TO FULL SCALE

PROJECT NO. 400530

20-S-301
SHEET OF

PLOTTED: 7/29/2019 4:44:18 PM
D400530

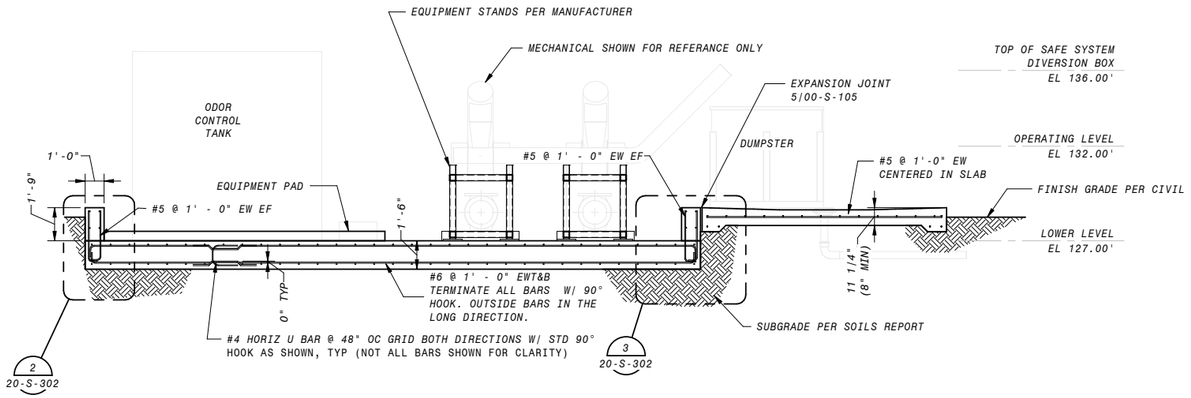


1 SECTION
20-S-101 1/4" = 1'-0"

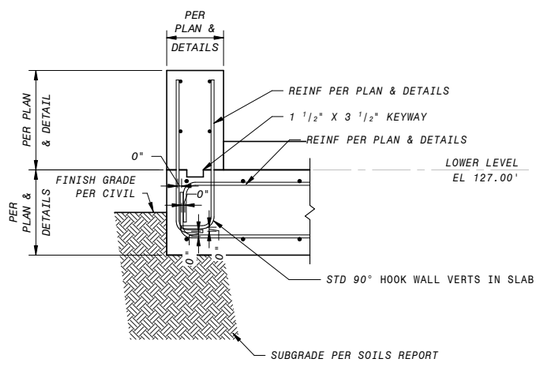


2 DETAIL 1
20-S-301 3/4" = 1'-0"

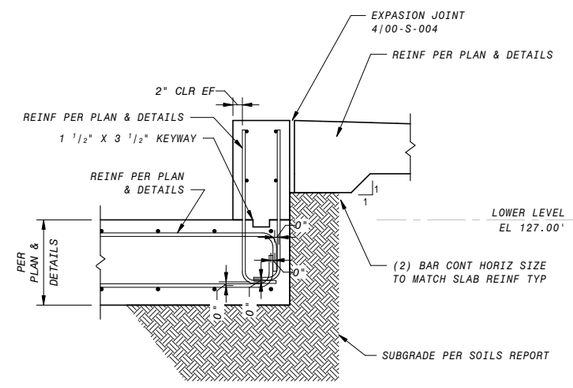


3 DETAIL 2
20-S-302 3/4" = 1'-0"

## GENERAL SECTION NOTES

1. FOR GENERAL STRUCTURAL NOTES, SEE SHEETS 00-S-002 AND STANDARD SPECIFICATIONS.
2. AT WALLS 12" THICK OR LESS, PROVIDE A 6" WATERSTOP, UNO. AT WALLS GREATER THAN 12" THICK, PROVIDE A 9" WATERSTOP, UNO. REFER TO DETAIL 2 ON SHEET 00-S-006.
3. REINFORCEMENT CLEAR COVER TO BE 2" EF FOR WALLS, 2" AT TOP OF SLABS, AND 3" AT BOTTOM OF SLABS, TYP., UNO
4. PROVIDE COMPLETE DESIGN PACKAGE FOR FRP COVER/GRATING (AND ACCESS HATCH, WHERE OCCURS) SIGNED BY A REGISTERED PROFESSIONAL ENGINEER TO THE EOR FOR REVIEW AND APPROVAL. MINIMUM DESIGN CRITERIA MUST INCLUDE: 60PSF UNIFORM DISTRIBUTED LIVE LOAD, 300LB CONCENTRATED LIVE LOAD, AND LESSER OF L/120 OR 3/8" DEFLECTION. SEE DETAIL 3/00-S-004 FOR ADDITIONAL INFORMATION AT GRATING SUPPORT.
5. ALL LAP SPLICES TO BE CLASS B PER DETAIL 1/00-S-004.
6. REFER TO MECHANICAL DRAWINGS FOR SIZE AND LOCATIONS OF PIPE PENETRATIONS AND WALL OPENINGS. SEE DETAIL 9/00-S-004 FOR TYPICAL REINFORCEMENT REQUIREMENTS. COORDINATE PIPE PENETRATION SEAL WITH EOR (WHERE OCCURS).
7. PROVIDE GATE PER MECHANICAL DRAWINGS. COORDINATE OPENING SIZE WITH EOR.
8. COORDINATE EQUIPMENT WEIGHT WITH EOR PRIOR TO INSTALLATION. SEE DETAIL 1/00-S-008 FOR TYPICAL EQUIPMENT ANCHORAGE AND EQUIPMENT PADS.

| DATE | REVISIONS AND RECORD OF USE | NO. | BY | CHK | APP |
|---|---|---|---|---|---|

Ashley & Vance ENGINEERING, INC
JOINT VENTURE
FILANC
BLACK & VEATCH

CITY OF MORRO BAY
FILANC BLACK & VEATCH DB PROPOSAL
RECLAMATION FACILITY (WRF)

HEADWORKS AREA
STRUCTURAL
SECTIONS & DETAILS 2

DESIGNED: I. SHOEBRIDGE
DETAILED: S. BENJAMIN
CHECKED: Checker
APPROVED: Approver
DATE:

0 1/2 1
IF THIS BAR DOES NOT MEASURE 1" THEN DRAWING IS NOT TO FULL SCALE

PROJECT NO. 400530

20-S-302
SHEET OF

COASTAL DEVELOPMENT PERMIT PLANS

PLOTTED: 7/29/2019 4:44:18 PM
D400530

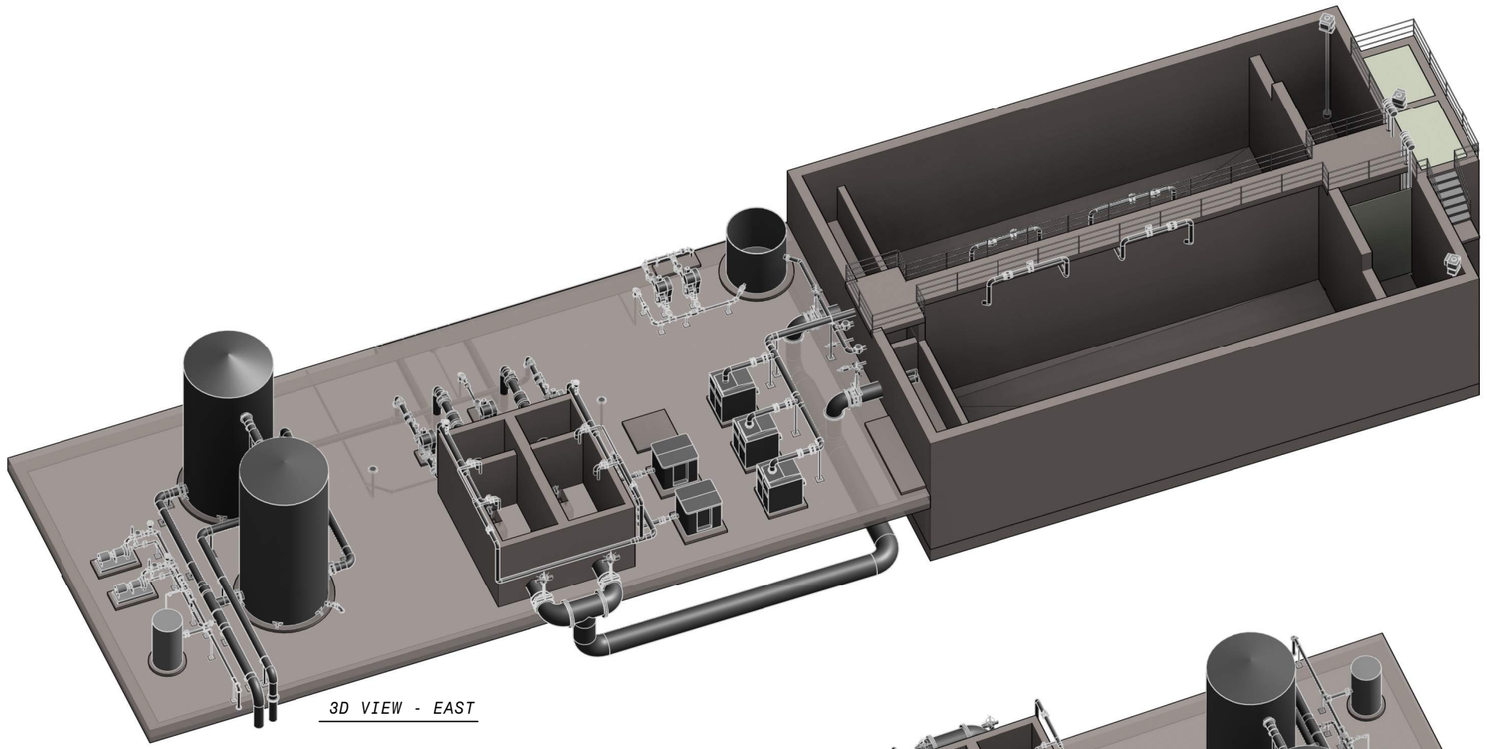

3D VIEW - EAST

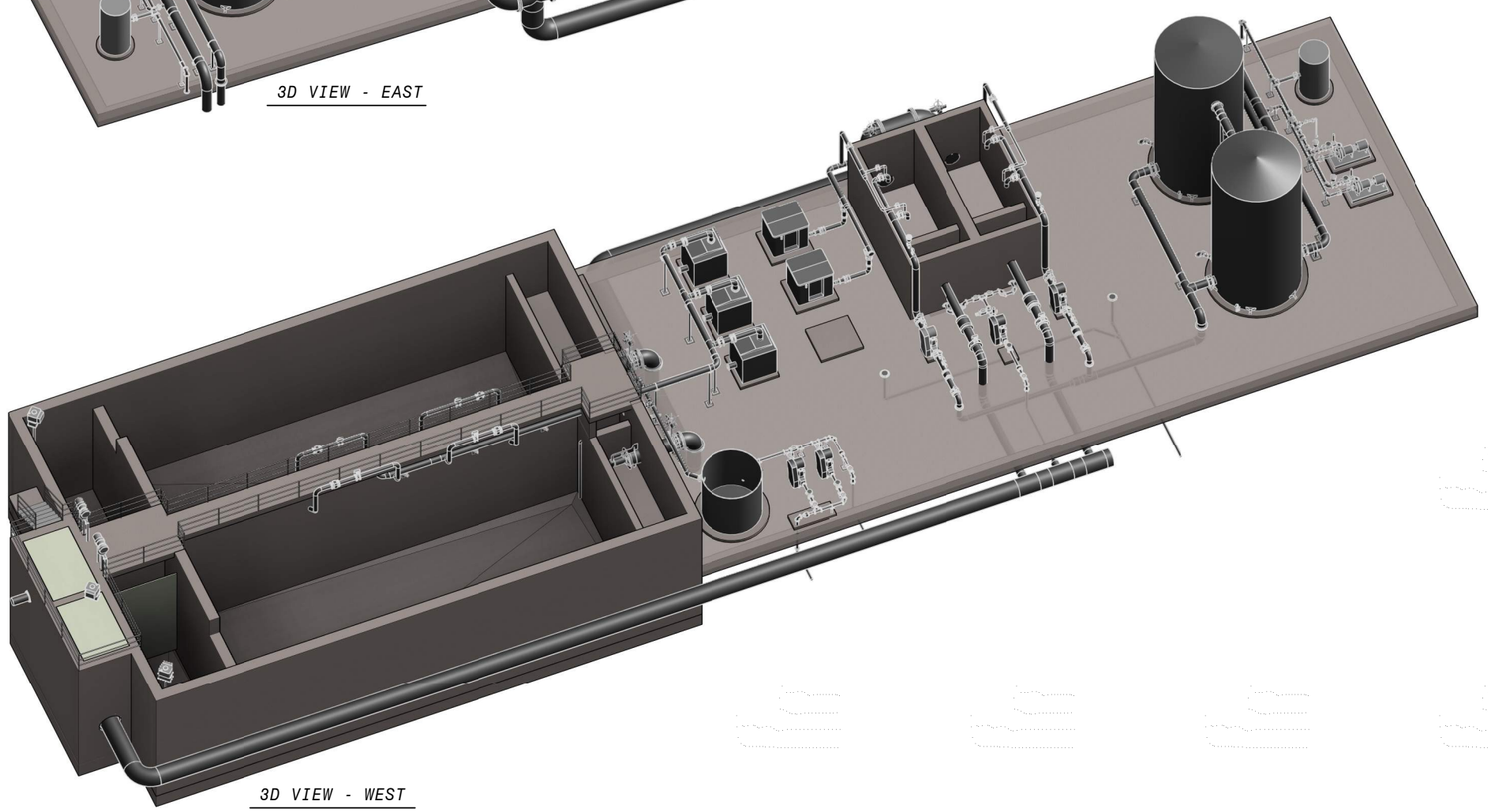

3D VIEW - WEST

COASTAL DEVELOPMENT PERMIT PLANS

| DATE | REVISIONS AND RECORD OF USE | NO. | BY | CHK | APP |
|---|---|---|---|---|---|

Ashley & Vance ENGINEERING, INC

JOINT VENTURE

FILANC

BLACK & VEATCH

CITY OF MORRO BAY
MORRO BAY WATER
RECLAMATION FACILITY (WRF)

TREATMENT AREA-OVERALL
STRUCTURAL
3D VIEWS

DESIGNED: I. SHOEBRIDGE
DETAILED: S. BENJAMIN
CHECKED: Checker
APPROVED: Approver
DATE:

0 1/2 1

IF THIS BAR DOES NOT MEASURE 1" THEN DRAWING IS NOT TO FULL SCALE

PROJECT NO.
400530

30-S-001

SHEET
OF

PLOTTED: 7/29/2019 12:15:59 PM

D400530

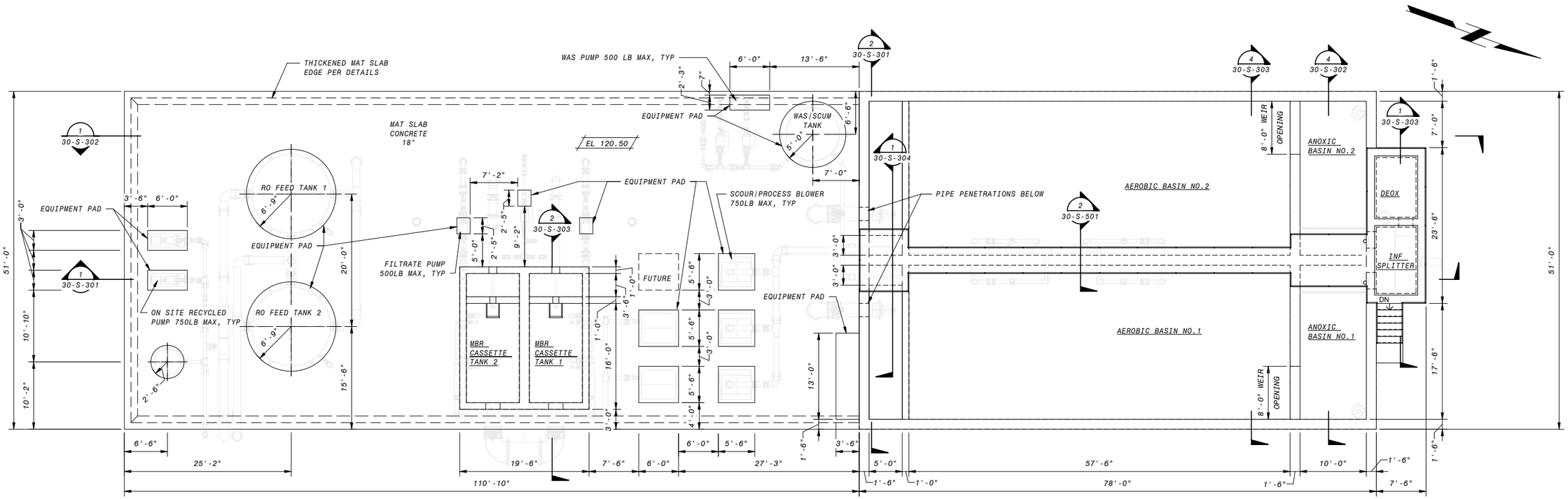


OPERATING LEVEL

1/8" = 1'-0"

## GENERAL NOTES

1. PLEASE SEE SOILS REPORT FOR ADDITIONAL SPECIFICATIONS AND RECOMMENDATIONS. IT IS THE DESIGN BUILDER'S RESPONSIBILITY TO OBTAIN A COPY OF THE SOILS REPORT FROM THE OWNER OR OWNERS REPRESENTATIVE.
2. PRIOR TO THE DESIGN BUILDER REQUESTING A BUILDING DEPARTMENT FOUNDATION INSPECTION, THE SOILS ENGINEER SHALL ADVISE THE BUILDING INSPECTOR IN WRITING THAT:
   A. BUILDING PAD WAS PREPARED IN ACCORDANCE WITH SOILS REPORT
   B. UTILITY TRENCHES HAVE BEEN PROPERLY BACKFILLED AND COMPACTED.
   C. FONUDATION EXCAVATIONS, THE SOIL'S EXPANSIVE CHARACTERISTICS AND BEARING CAPACITY CONFORM TO THE SOILS REPORT.
3. SEE GENERAL NOTES & SPECIFICATIONS FOR ADDITIONAL REQUIRMENTS AND MATERIAL SPECIFICATIONS.
4. DESIGN BUILDER TO VERIFY ALL DIMENSIONS PRIOR TO COMMENCEMENT OF CONSTRUCTION.
5. ALL REINFORCEMENT LAP SPLICES TO BE CLASS B PER DETAIL 1/00-S-101
6. IF SPLICES RESULT IN CLEAR SPACING SESS THAN ACI CODE MINIMUMS, PROVIDE TYPE 2 MECHANICAL SPLICES. MECHANICAL CONNECTORS SHALL BE SUBMITTED FOR REVIEW AND APPROVAL.
7. ALL SLAB REINFORCEMENT MUST TERIMINATE WITH A STANDARD 90° HOOK.
8. FURNISH FRP ODOR CONTROL COVER DESIGNED FOR OUTDOOR INSTALLATION IN A COASTAL ENVIRONMENT. COVER SHALL BE DESIGNED WITH REMOVABLE PANELS TO BASIN ACCESS, WITH PANELS WEIGHING NO MORE THAN 100 LBS EACH. HANDLES AND PICK POINTS SHALL BE INCLUDED AS REQUIRED. PANELS SHALL BE DESIGNED FOR TWO OPERATORS TO BE STANDING ON THE COVER REMOVING A PANEL, 60 PSF UNIFORM DISTRIBUTED LIVE LOAD, 300 LB CONCENTRATED LIVE LOAD, AND LESSER OF L/120 OR 3/8" DEFLECTION. COLOR SHALL BE SELECTED IN SUBMITTAL REVIEW FROM MANUFACTURER STANDARD COLOR SELECTIONS.
9. SUBMIT EQUIPMENT WEIGHT FOR REVIEW PRIOR TO INSTALLATION. SEE DETAIL 1/00-S-105 FOR TYPICAL EQUIPMENT PADS. LOCATION & SIZE OF EQUIPMENT PADS TO BE COORDINATED WITH MECHANICAL/ELECTRICAL/PLUMBING DRAWINGS. EQUIPMENT ANCHORAGE PER PROJECT SPECIFICATIONS.
10. REFER TO MECHANICAL/ ELECTRICAL/ PLUMBING DRAWINGS FOR SIZE AND LOCATIONS OF PIPE PENETRATIONS AND WALL OPENINGS. SEE DETAIL 9/00-S-101 FOR TYPICAL REIFORCEMENT REQUIREMENTS. COORDINATE PIPE PENETRATION SEAL WITH MECHANICAL ENGINEER OF RECORD.
11. FOR TYPICAL MAT SLAB EDGE, REFER TO DETAIL 13/00-S-102.

8' 4' 0' 8' 16'

1/8" = 1'-0"

# COASTAL DEVELOPMENT PERMIT PLANS

| NO. | BY | CHK | APP | DATE | REVISIONS AND RECORD OF USE |
|---|---|---|---|---|---|

Ashley & Vance ENGINEERING, INC

JOINT VENTURE

FILANC

BLACK & VEATCH

CITY OF MORRO BAY
MORRO BAY WATER
RECLAMATION FACILITY (WRF)

TREATMENT AREA
STRUCTURAL
OPERATING LEVEL PLAN

DESIGNED: I. SHOEBRIDGE
DETAILED: S. BENJAMIN
CHECKED: Checker
APPROVED: Approver
DATE:

0 1/2 1

IF THIS BAR DOES NOT MEASURE 1" THEN DRAWING IS NOT TO FULL SCALE

PROJECT NO.
400530

30-S-101

SHEET
OF

PLOTTED: 7/29/2019 12:16:00 PM

D400530

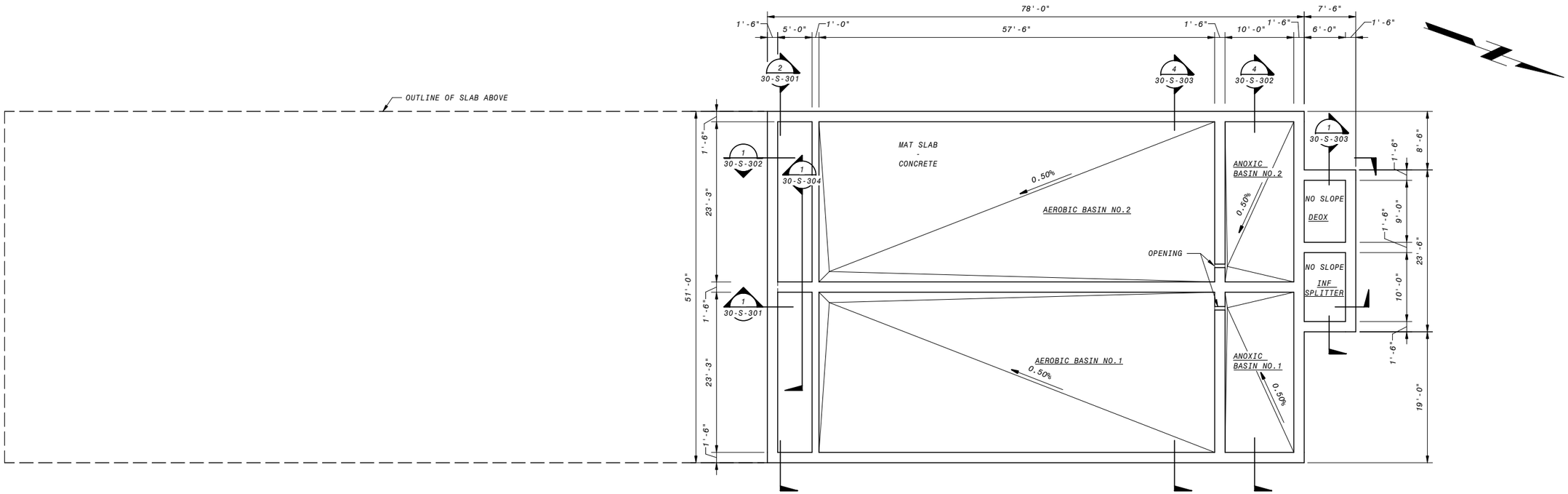


LOWER PLAN

1/8" = 1'-0"

## GENERAL NOTES

1. PLEASE SEE SOILS REPORT FOR ADDITIONAL SPECIFICATIONS AND RECOMMENDATIONS. IT IS THE DESIGN BUILDER'S RESPONSIBILITY TO OBTAIN A COPY OF THE SOILS REPORT FROM THE OWNER OR OWNERS REPRESENTATIVE.
2. PRIOR TO THE DESIGN BUILDER REQUESTING A BUILDING DEPARTMENT FOUNDATION INSPECTION, THE SOILS ENGINEER SHALL ADVISE THE BUILDING INSPECTOR IN WRITING THAT:
   A. BUILDING PAD WAS PREPARED IN ACCORDANCE WITH SOILS REPORT
   B. UTILITY TRENCHES HAVE BEEN PROPERLY BACKFILLED AND COMPACTED.
   C. FONUDATION EXCAVATIONS, THE SOIL'S EXPANSIVE CHARACTERISTICS AND BEARING CAPACITY CONFORM TO THE SOILS REPORT.
3. SEE GENERAL NOTES & SPECIFICATIONS FOR ADDITIONAL REQUIRMENTS AND MATERIAL SPECIFICATIONS.
4. DESIGN BUILDER TO VERIFY ALL DIMENSIONS PRIOR TO COMMENCEMENT OF CONSTRUCTION.
5. ALL REINFORCEMENT LAP SPLICES TO BE CLASS B 1/00-S-101
6. IF SPLICES RESULT IN CLEAR SPACING SESS THAN ACI CODE MINIMUMS, PROVIDE TYPE 2 MECHANICAL SPLICES. MECHANICAL CONNECTORS SHALL BE SUBMITTED TO EOR FOR REVIEW AND APPROVAL.
7. ALL SLAB REINFORCEMENT MUST TERIMINATE WITH A STANDARD 90° HOOK.
8. REFER TO MECHANICAL/ ELECTRICAL/ PLUMBING DRAWINGS FOR SIZE AND LOCATIONS OF PIPE PENETRATIONS AND WALL OPENINGS. SEE DETAIL 9/00-S-101 FOR TYPICAL REIFORCEMENT REQUIREMENTS. COORDINATE PIPE PENETRATION SEAL WITH MECHANICAL ENGINEER OF RECORD.

8' 4' 0' 8' 16'

1/8" = 1'-0"

# COASTAL DEVELOPMENT PERMIT PLANS

| NO. | BY | CHK | APP | DATE | REVISIONS AND RECORD OF USE |
|---|---|---|---|---|---|

Ashley & Vance ENGINEERING, INC

JOINT VENTURE

FILANC

BLACK & VEATCH

CITY OF MORRO BAY
MORRO BAY WATER
RECLAMATION FACILITY (WRF)

TREATMENT AREA
STRUCTURAL
LOWER PLAN

DESIGNED: I. SHOEBRIDGE
DETAILED: S. BENJAMIN
CHECKED: Checker
APPROVED: Approver
DATE:

0 1/2 1

IF THIS BAR DOES NOT MEASURE 1" THEN DRAWING IS NOT TO FULL SCALE

PROJECT NO.
400530

30-S-102

SHEET
OF

PLOTTED: 7/29/2019 12:16:00 PM

D400530

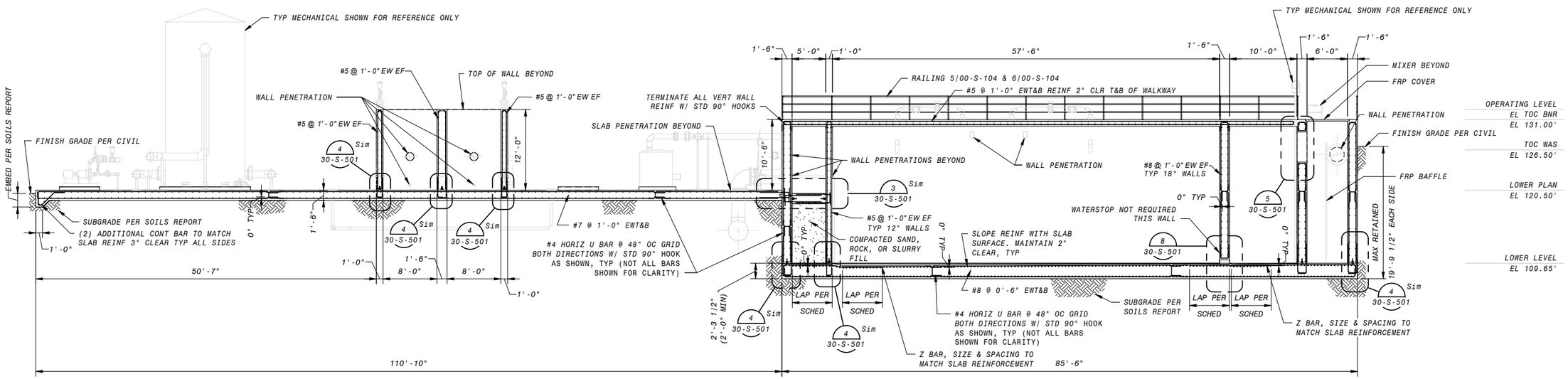


1 SECTION
30-S-101 1/8" = 1'-0"

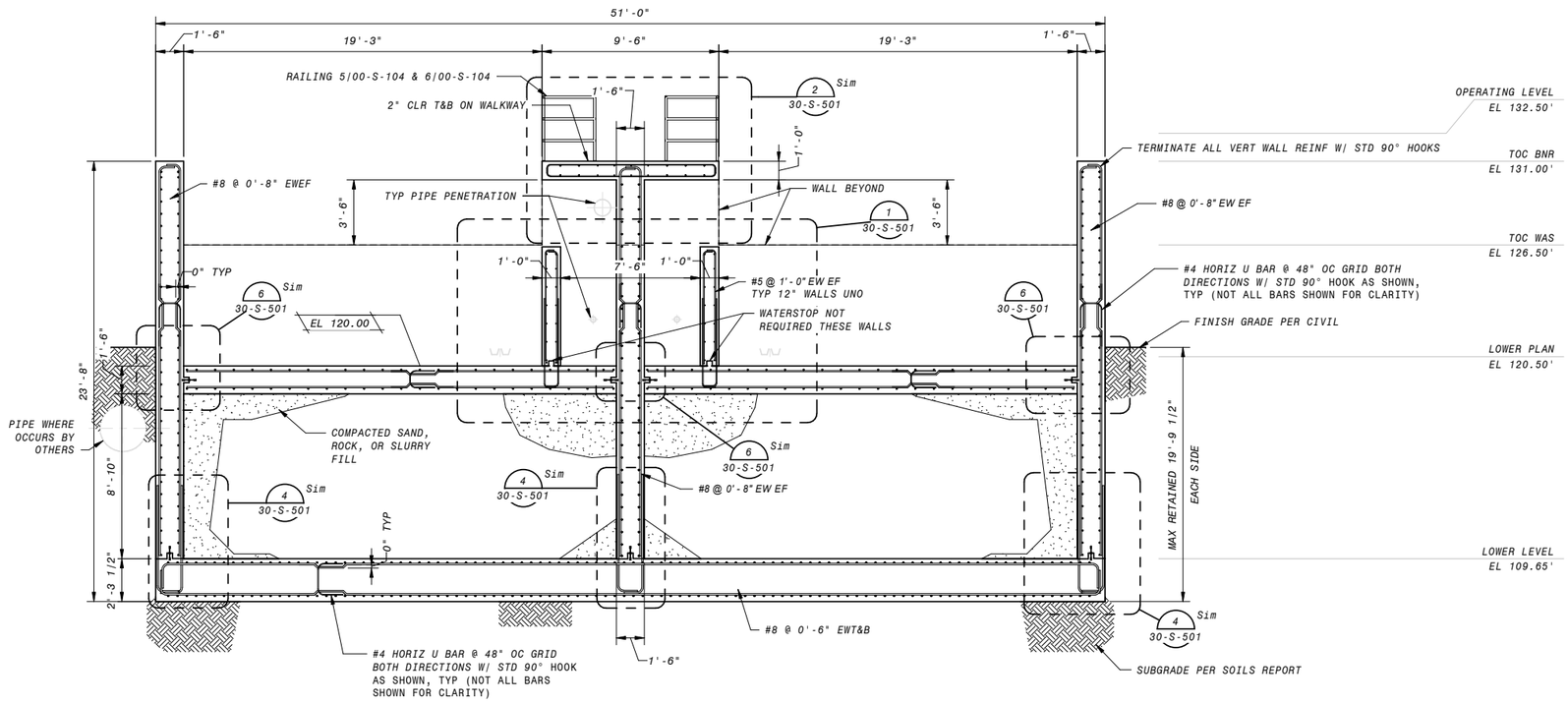


2 SECTION
30-S-101 1/4" = 1'-0"

## GENERAL SECTION NOTES

1. FOR GENERAL STRUCTURAL NOTES, SEE SHEET 00-S-002 AND STANDARD SPECIFICATIONS.
2. AT WALLS 12" THICK OR LESS, PROVIDE A 6" WATERSTOP, UNO. AT WALLS GREATER THAN 12" THICK, PROVIDE A 9" WATERSTOP, UNO. REFER TO DETAIL 2 ON SHEET 00-S-103.
3. REINFORCEMENT CLEAR COVER TO BE 2" EF FOR WALLS, 2" AT TOP OF SLABS, AND 3" AT BOTTOM OF SLABS, TYP., UNO
4. FURNISH FRP ODOR CONTROL COVER DESIGNED FOR OUTDOOR INSTALLATION IN COASTAL ENVIRONMENT. COVER SHALL BE DESIGNED WITH REMOVABLE PANELS TO BASIN ACCESS, WITH PANELS WEIGHING NO MORE THAN 100 LBS EACH. HANDLES AND PICK POINTS SHALL BE INCLUDED AS REQUIRED. PANELS SHALL BE DESIGNED FOR TWO OPERATORS TO BE STANDING ON THE COVER REMOVING A PANEL, 60 PSF UNIFORM DISTRIBUTED LIVE LOAD, 300 LB CONCENTRATED LIVE LOAD, AND LESSER OF L/120 OR 3/8" DEFLECTION. COLOR SHALL BE SELECTED IN SUBMITTAL REVIEW FROM MANUFACTURER STANDARD COLOR SELECTIONS.
5. ALL LAP SPLICES TO BE CLASS B PER DETAIL 1/00-S-101.
6. REFER TO MECHANICAL DRAWINGS FOR SIZE AND LOCATIONS OF PIPE PENETRATIONS AND WALL OPENINGS. SEE DETAIL 9/00-S-101 FOR TYPICAL REINFORCEMENT REQUIREMENTS. COORDINATE PIPE PENETRATION SEAL WITH MECHANICAL EOR (WHERE OCCURS).
7. PROVIDE GATE PER MECHANICAL DRAWINGS. COORDINATE OPENING SIZE AND ATTACHMENT WITH EOR.
8. SUBMIT EQUIPMENT WEIGHT FOR REVIEW PRIOR TO INSTALLATION. SEE DETAIL 1/00-S-105 FOR TYPICAL EQUIPMENT PADS. LOCATION & SIZE OF EQUIPMENT PADS TO BE COORDINATED WITH MECHANICAL/ ELECTRICAL/ PLUMBING DRAWINGS. EQUIPMENT ANCHORAGE PER PROJECT SPECIFICATIONS.
9. FOR TYPICAL MAT SLAB EDGE, REFER TO DETAIL 13/00-S-102.
10. PROVIDE COMPLETE DESIGN PACKAGE FOR DAVIT AND MIXERS.

8' 4' 0' 8' 16'
1/8" = 1'-0"

# COASTAL DEVELOPMENT PERMIT PLANS

| NO. | BY | CHK | APP | REVISIONS AND RECORD OF USE | DATE |
|---|---|---|---|---|---|

Ashley & Vance ENGINEERING, INC
JOINT VENTURE
BLACK & VEATCH
FILANC

CITY OF MORRO BAY
MORRO BAY WATER
RECLAMATION FACILITY (WRF)

TREATMENT AREA
STRUCTURAL
SECTIONS & DETAILS 1

DESIGNED: I. SHOEBRIDGE
DETAILED: S. BENJAMIN
CHECKED: Checker
APPROVED: Approver
DATE:

0 1/2 1
IF THIS BAR DOES NOT MEASURE 1" THEN DRAWING IS NOT TO FULL SCALE

PROJECT NO.
400530

30-S-301
SHEET
OF

PLOTTED: 7/29/2019 12:16:02 PM
D400530

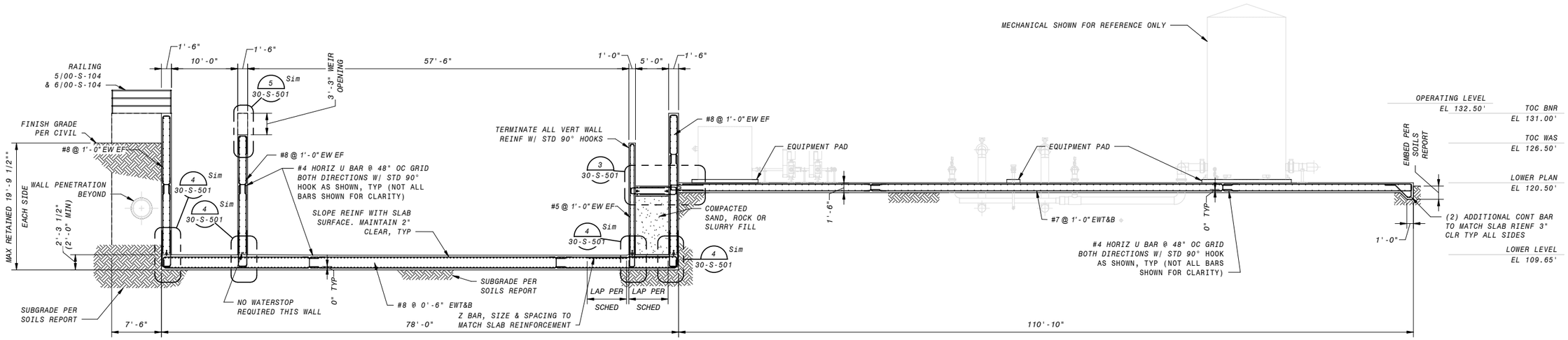


1 SECTION
30-S-101 1/8" = 1'-0"

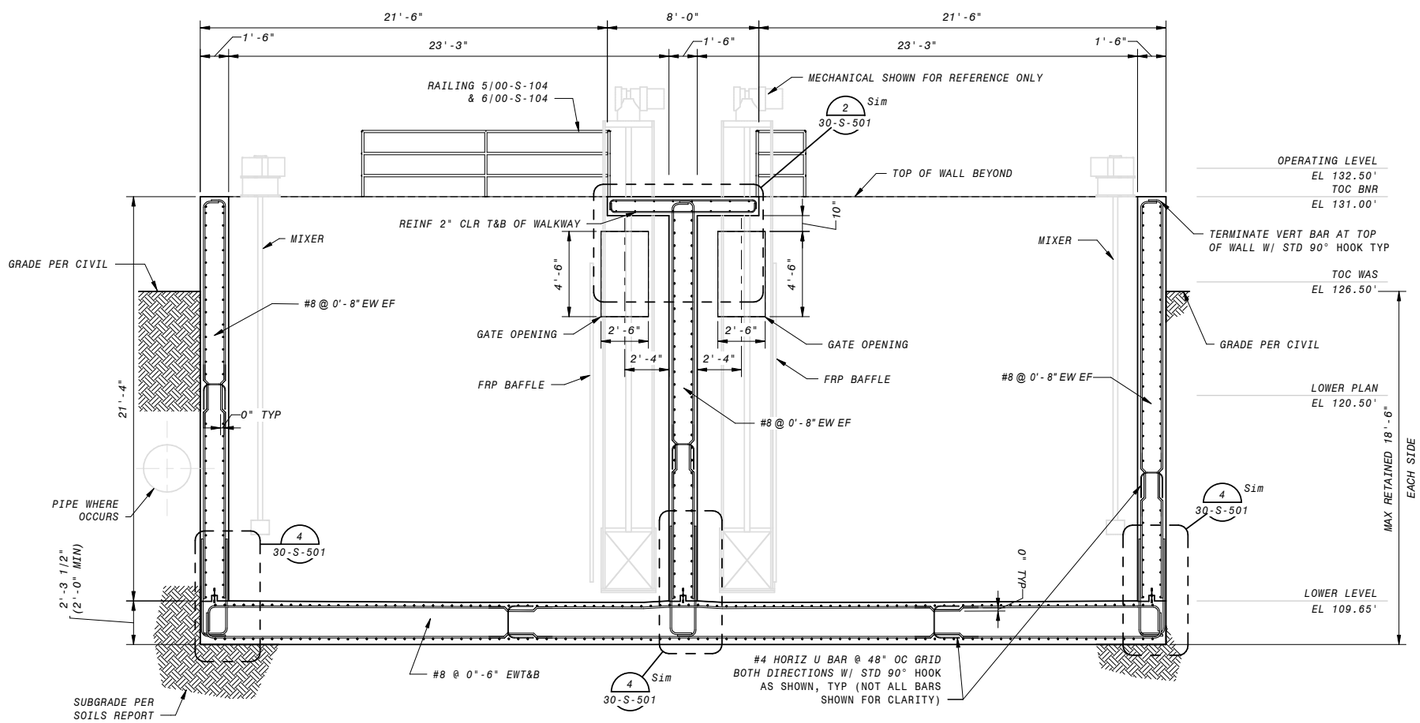


4 SECTION
30-S-101 1/4" = 1'-0"

## GENERAL SECTION NOTES

1. FOR GENERAL STRUCTURAL NOTES, SEE SHEET 00-S-002 AND STANDARD SPECIFICATIONS.
2. AT WALLS 12" THICK OR LESS, PROVIDE A 6" WATERSTOP, UNO. AT WALLS GREATER THAN 12" THICK, PROVIDE A 9" WATERSTOP, UNO. REFER TO DETAIL 2 ON SHEET 00-S-103.
3. REINFORCEMENT CLEAR COVER TO BE 2" EF FOR WALLS, 2" AT TOP OF SLABS, AND 3" AT BOTTOM OF SLABS, TYP., UNO
4. ALL LAP SPLICES TO BE CLASS B PER DETAIL 1/00-S-101.
5. REFER TO MECHANICAL DRAWINGS FOR SIZE AND LOCATIONS OF PIPE PENETRATIONS AND WALL OPENINGS. SEE DETAIL 9/00-S-101 FOR TYPICAL REINFORCEMENT REQUIREMENTS. COORDINATE PIPE PENETRATION SEAL WITH MECHANICAL EOR (WHERE OCCURS).
6. PROVIDE WEIR PLATE PER MECHANICAL DRAWINGS. COORDINATE OPENING SIZE & PLATE ATTACHMENT WITH EOR.
7. PROVIDE GATE PER MECHANICAL DRAWINGS. COORDINATE OPENING SIZE WITH EOR.
8. SUBMIT EQUIPMENT WEIGHT FOR REVIEW PRIOR TO INSTALLATION. SEE DETAIL 1/00-S-105 FOR TYPICAL EQUIPMENT PADS. LOCATION & SIZE OF EQUIPMENT PADS TO BE COORDINATED WITH MECHANICAL/ ELECTRICAL/ PLUMBING DRAWINGS. EQUIPMENT ANCHORAGE PER PROJECT SPECIFICATIONS.
9. PROVIDE COMPLETE DESIGN PACKAGE FOR FRP BAFFLE PLATE (INCLUDING ANCHORAGE) SIGNED BY REGISTERED PROFESSIONAL ENGINEER FOR REVIEW.
10. FOR TYPICAL MAT SLAB EDGE, REFER TO DETAIL 13/00-S-102.
11. PROVIDE COMPLETE DESIGN PACKAGE FOR DAVIT AND MIXWERS.

8' 4' 0' 8' 16'
1/8" = 1'-0"

COASTAL DEVELOPMENT PERMIT PLANS

| DATE | REVISIONS AND RECORD OF USE | NO. BY | CHK APP |
|---|---|---|---|

Ashley & Vance ENGINEERING, INC
JOINT VENTURE
FILANC
BLACK & VEATCH

CITY OF MORRO BAY
MORRO BAY WATER RECLAMATION FACILITY (WRF)

TREATMENT AREA
STRUCTURAL
SECTIONS & DETAILS 2

DESIGNED: I. SHOEBRIDGE
DETAILED: S. BENJAMIN
CHECKED: Checker
APPROVED: Approver
DATE:

0 1/2 1
IF THIS BAR DOES NOT MEASURE 1" THEN DRAWING IS NOT TO FULL SCALE

PROJECT NO. 400530

30-S-302
SHEET OF

PLOTTED: 7/29/2019 12:16:02 PM
D400530

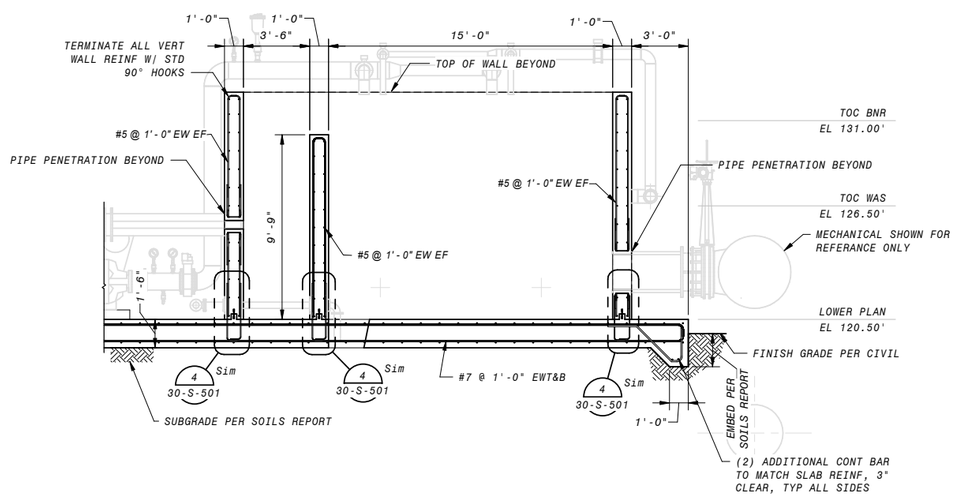


2 SECTION
30-S-101 1/4" = 1'-0"

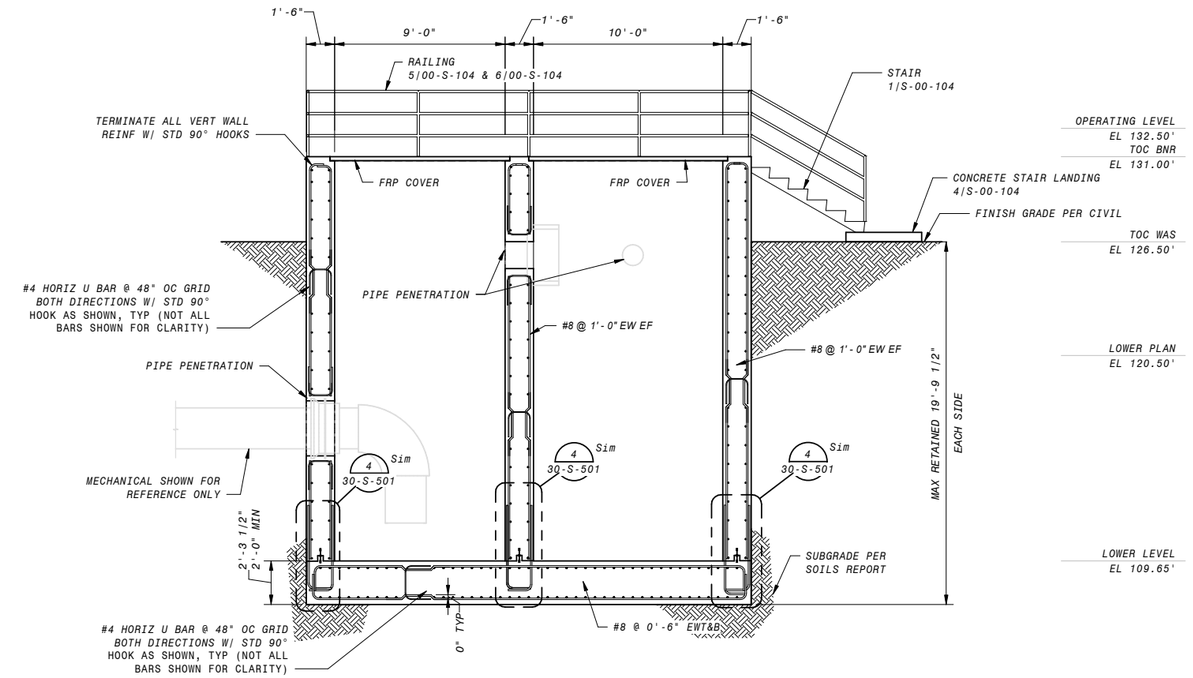


1 SECTION
30-S-101 1/4" = 1'-0"

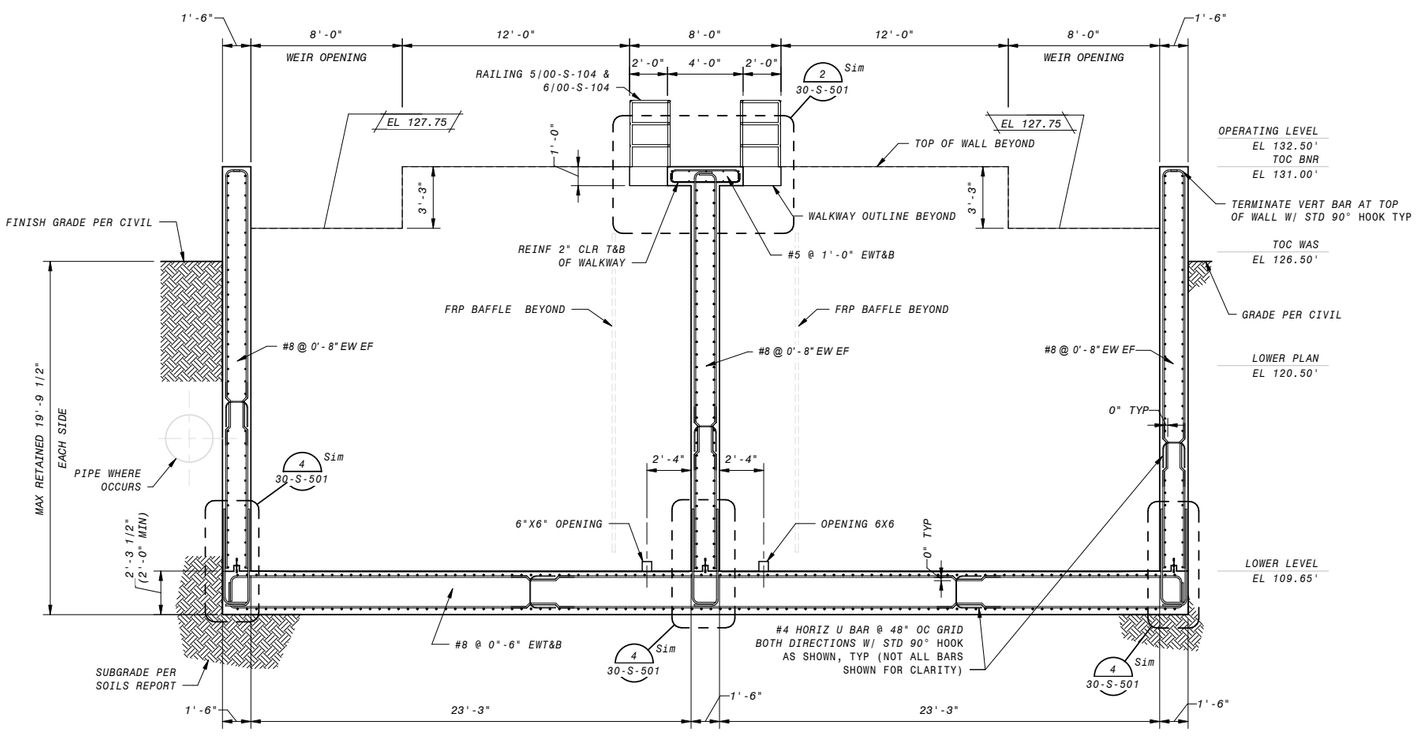


4 SECTION
30-S-101 1/4" = 1'-0"

## GENERAL SECTION NOTES

1. FOR GENERAL STRUCTURAL NOTES, SEE SHEETS 00-S-002 AND STANDARD SPECIFICATIONS.
2. AT WALLS 12" THICK OR LESS, PROVIDE A 6" WATERSTOP, UNO. AT WALLS GREATER THAN 12" THICK, PROVIDE A 9" WATERSTOP, UNO. REFER TO DETAIL 2 ON SHEET 00-S-103.
3. REINFORCEMENT CLEAR COVER TO BE 2" EF FOR WALLS, 2" AT TOP OF SLABS, AND 3" AT BOTTOM OF SLABS, TYP., UNO
4. FURNISH FRP ODOR CONTROL COVER DESIGNED FOR OUTDOOR INSTALLATION IN A COASTAL ENVIRONMENT. COVER SHALL BE DESIGNED WITH REMOVABLE PANELS TO BASIN ACCESS, WITH PANELS WEIGHING NO MORE THAN 100 LBS EACH. HANDLES AND PICK POINTS SHALL BE INCLUDED AS REQUIRED. PANELS SHALL BE DESIGNED FOR TWO OPERATORS TO BE STANDING ON THE COVER REMOVING A PANEL, 60 PSF UNIFORM DISTRIBUTED LIVE LOAD, 300 LB CONCENTRATED LIVE LOAD, AND LESSER OF L/120 OR 3/8" DEFLECTION. COLOR SHALL BE SELECTED IN SUBMITTAL REVIEW FROM MANUFACTURER STANDARD COLOR SELECTIONS.
5. ALL LAP SPLICES TO BE CLASS B PER DETAIL 1/00-S-101.
6. REFER TO MECHANICAL DRAWINGS FOR SIZE AND LOCATIONS OF PIPE PENETRATIONS AND WALL OPENINGS. SEE DETAIL 9/00-S-101 FOR TYPICAL REINFORCEMENT REQUIREMENTS. COORDINATE PIPE PENETRATION SEAL WITH EOR (WHERE OCCURS).
7. PROVIDE WEIR PLATE PER MECHANICAL DRAWINGS. COORDINATE OPENING SIZE & PLATE ATTACHMENT WITH EOR.
8. PROVIDE GATE PER MECHANICAL DRAWINGS. COORDINATE OPENING SIZE WITH EOR.
9. SUBMIT EQUIPMENT WEIGHT FOR REVIEW PRIOR TO INSTALLATION. SEE DETAIL 1/00-S-105 FOR TYPICAL EQUIPMENT PADS. LOCATION & SIZE OF EQUIPMENT PADS TO BE COORDINATED WITH MECHANICAL/ ELECTRICAL/ PLUMBING DRAWINGS. EQUIPMENT ANCHORAGE PER PROJECT SPECIFICATIONS.
10. PROVIDE COMPLETE DESIGN PACKAGE FOR FRP BAFFLE PLATE (INCLUDING ANCHORAGE) SIGNED BY REGISTERED PROFESSIONAL ENGINEER TO THE EOR FOR REVIEW AND APPROVAL.
11. FOR TYPICAL MAT SLAB EDGE, REFER TO DETAIL 13/00-S-102.

COASTAL DEVELOPMENT PERMIT PLANS

| DATE | REVISIONS AND RECORD OF USE | NO. | BY | CHK | APP |
|---|---|---|---|---|---|

Ashley & Vance ENGINEERING, INC
JOINT VENTURE
FILANC
BLACK & VEATCH

CITY OF MORRO BAY
MORRO BAY WATER RECLAMATION FACILITY (WRF)

TREATMENT AREA
STRUCTURAL
SECTIONS & DETAILS 3

DESIGNED: I. SHOEBRIDGE
DETAILED: S. BENJAMIN
CHECKED: Checker
APPROVED: Approver
DATE:

0 1/2 1
IF THIS BAR DOES NOT MEASURE 1" THEN DRAWING IS NOT TO FULL SCALE

PROJECT NO. 400530

30-S-303
SHEET OF

PLOTTED: 7/29/2019 12:16:03 PM
D400530

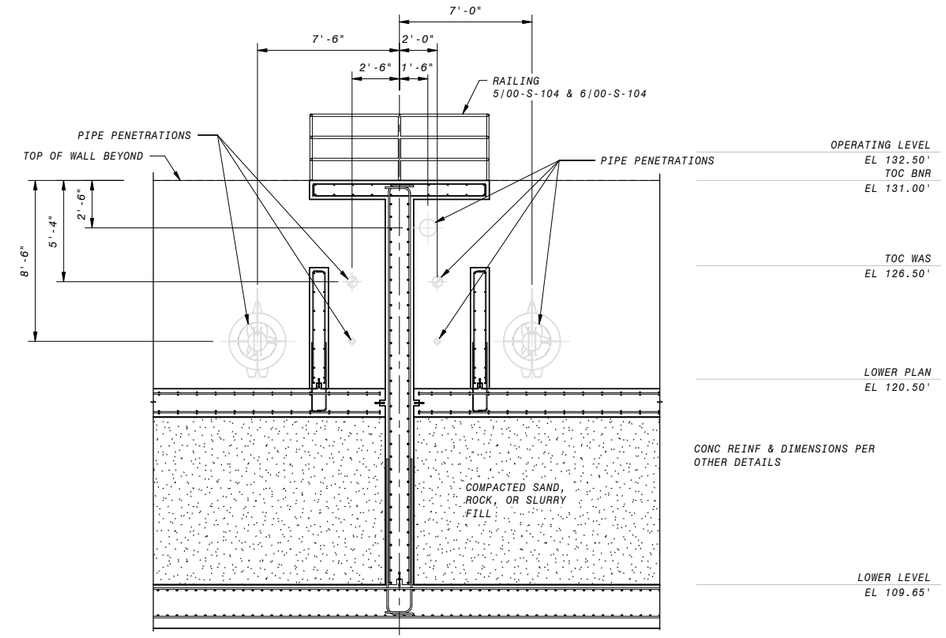


1 SECTION
30-S-101 1/4" = 1'-0"

## GENERAL SECTION NOTES

1. FOR GENERAL STRUCTURAL NOTES, SEE SHEET 00-S-002 AND STANDARD SPECIFICATIONS.
2. AT WALLS 12" THICK OR LESS, PROVIDE A 6" WATERSTOP, UNO. AT WALLS GREATER THAN 12" THICK, PROVIDE A 9" WATERSTOP, UNO. REFER TO DETAIL 2 ON SHEET 00-S-103.
3. REINFORCEMENT CLEAR COVER TO BE 2" EF FOR WALLS, 2" AT TOP OF SLABS, AND 3" AT BOTTOM OF SLABS, TYP., UNO
4. ALL LAP SPLICES TO BE CLASS B PER DETAIL 1/00-S-101.
5. REFER TO MECHANICAL DRAWINGS FOR SIZE AND LOCATIONS OF PIPE PENETRATIONS AND WALL OPENINGS. SEE DETAIL 9/00-S-101 FOR TYPICAL REINFORCEMENT REQUIREMENTS. COORDINATE PIPE PENETRATION SEAL WITH MECHANICAL EOR (WHERE OCCURS).

COASTAL DEVELOPMENT PERMIT PLANS

| NO. | BY | CHK | APP | REVISIONS AND RECORD OF USE | DATE |
|---|---|---|---|---|---|

Ashley & Vance ENGINEERING, INC
JOINT VENTURE
BLACK & VEATCH
FILANC

CITY OF MORRO BAY
MORRO BAY WATER
RECLAMATION FACILITY (WRF)

TREATMENT AREA
STRUCTURAL
SECTIONS & DETAILS 4

DESIGNED: I. SHOEBRIDGE
DETAILED: S. BENJAMIN
CHECKED: Checker
APPROVED: Approver
DATE:

0 1/2 1
IF THIS BAR DOES NOT MEASURE 1" THEN DRAWING IS NOT TO FULL SCALE

PROJECT NO.
400530

30-S-304
SHEET
OF

PLOTTED: 7/29/2019 12:16:03 PM
D400530

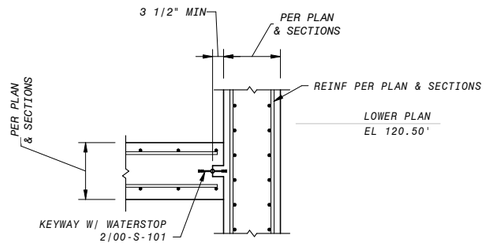


6 SECTION
30-S-301 1/2" = 1'-0"

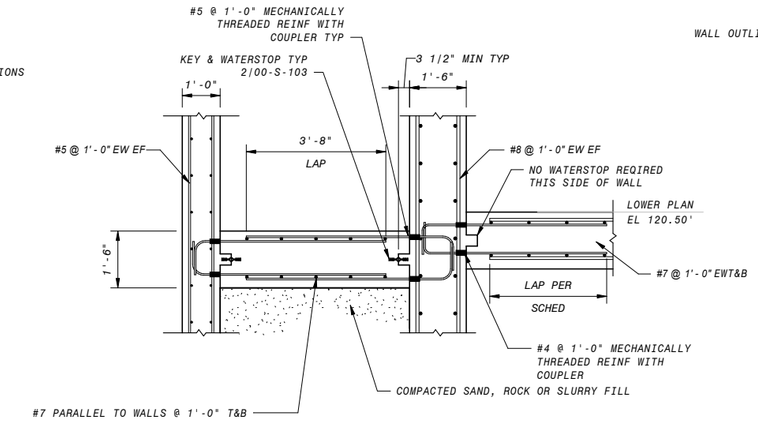


3 SECTION
30-S-301 1/2" = 1'-0"

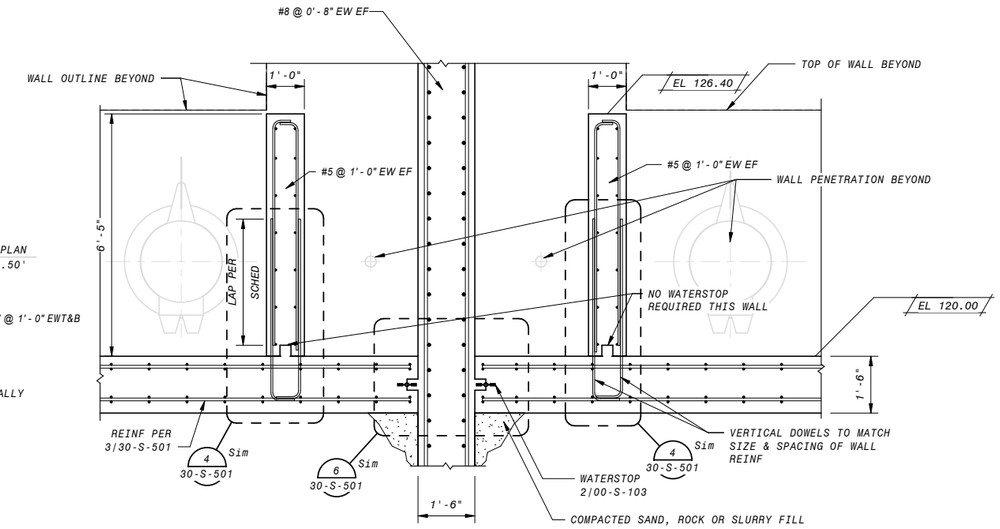


1 SECTION
30-S-301 1/2" = 1'-0"

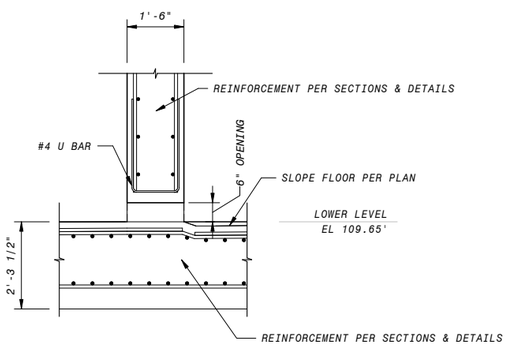


8 SECTION
30-S-301 1/2" = 1'-0"

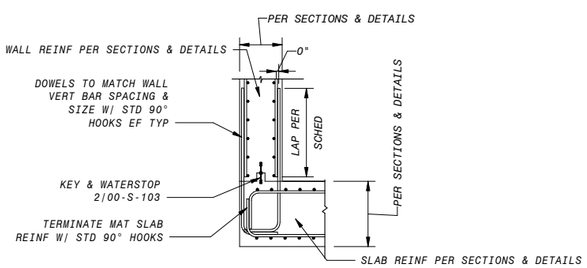


4 TYP WALL TO SLAB JOINT
30-S-301 3/8" = 1'-0"

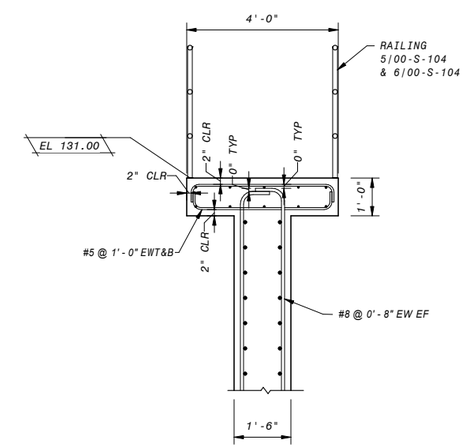


2 TYP WALKWAY TO WALL
30-S-101 1/2" = 1'-0"

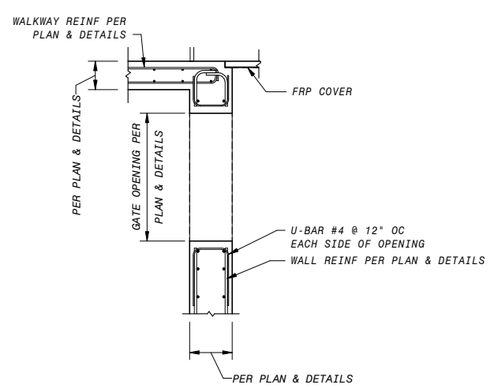


5 TYP WALL OPENING
30-S-301 3/8" = 1'-0"

## GENERAL SECTION NOTES

1. FOR GENERAL STRUCTURAL NOTES, SEE SHEETS 00-S-002 AND STANDARD SPECIFICATIONS.
2. AT WALLS 12" THICK OR LESS, PROVIDE A 6" WATERSTOP, UNO. AT WALLS GREATER THAN 12" THICK, PROVIDE A 9" WATERSTOP, UNO. REFER TO DETAIL 2 ON SHEET 00-S-006.
3. REINFORCEMENT CLEAR COVER TO BE 2" EF FOR WALLS, 2" AT TOP OF SLABS, AND 3" AT BOTTOM OF SLABS, TYP., UNO
4. FURNISH FRP ODOR CONTROL COVER DESIGNED FOR OUTDOOR INSTALLATION IN A COASTAL ENVIRONMENT. COVER SHALL BE DESIGNED WITH REMOVABLE PANELS TO BASIN ACCESS, WITH PANELS WEIGHING NO MORE THAN 100 LBS EACH. HANDLES AND PICK POINTS SHALL BE INCLUDED AS REQUIRED. PANELS SHALL BE DESIGNED FOR TWO OPERATORS TO BE STANDING ON THE COVER REMOVING A PANEL, 60 PSF UNIFORM DISTRIBUTED LIVE LOAD, 300 LB CONCENTRATED LIVE LOAD, AND LESSER OF L/120 OR 3/8" DEFLECTION. COLOR SHALL BE SELECTED IN SUBMITTAL REVIEW FROM MANUFACTURER STANDARD COLOR SELECTIONS.
5. ALL LAP SPLICES TO BE CLASS B PER DETAIL 1/00-S-004.
6. REFER TO MECHANICAL DRAWINGS FOR SIZE AND LOCATIONS OF PIPE PENETRATIONS AND WALL OPENINGS. SEE DETAIL 9/00-S-004 FOR TYPICAL REINFORCEMENT REQUIREMENTS. COORDINATE PIPE PENETRATION SEAL WITH EOR (WHERE OCCURS).
7. PROVIDE GATE PER MECHANICAL DRAWINGS. COORDINATE OPENING SIZE WITH EOR.
8. ALL MECHANICAL SPLICES SHALL BE TYPE 2 AND DEVELOP AT LEAST 1.25FY OF THE BAR.

# COASTAL DEVELOPMENT PERMIT PLANS

| DATE | REVISIONS AND RECORD OF USE | NO. | BY | CHK | APP |
|---|---|---|---|---|---|

Ashley & Vance ENGINEERING, INC
JOINT VENTURE
FILANC
BLACK & VEATCH

CITY OF MORRO BAY
MORRO BAY WATER
RECLAMATION FACILITY (WRF)

TREATMENT AREA
STRUCTURAL
SECTIONS & DETAILS 5

DESIGNED: I. SHOEBRIDGE
DETAILED: S. BENJAMIN
CHECKED: Checker
APPROVED: Approver
DATE:

0 1/2 1
IF THIS BAR DOES NOT MEASURE 1" THEN DRAWING IS NOT TO FULL SCALE

PROJECT NO. 400530

30-S-501
SHEET
OF

PLOTTED: 7/29/2019 12:16:03 PM
D400530

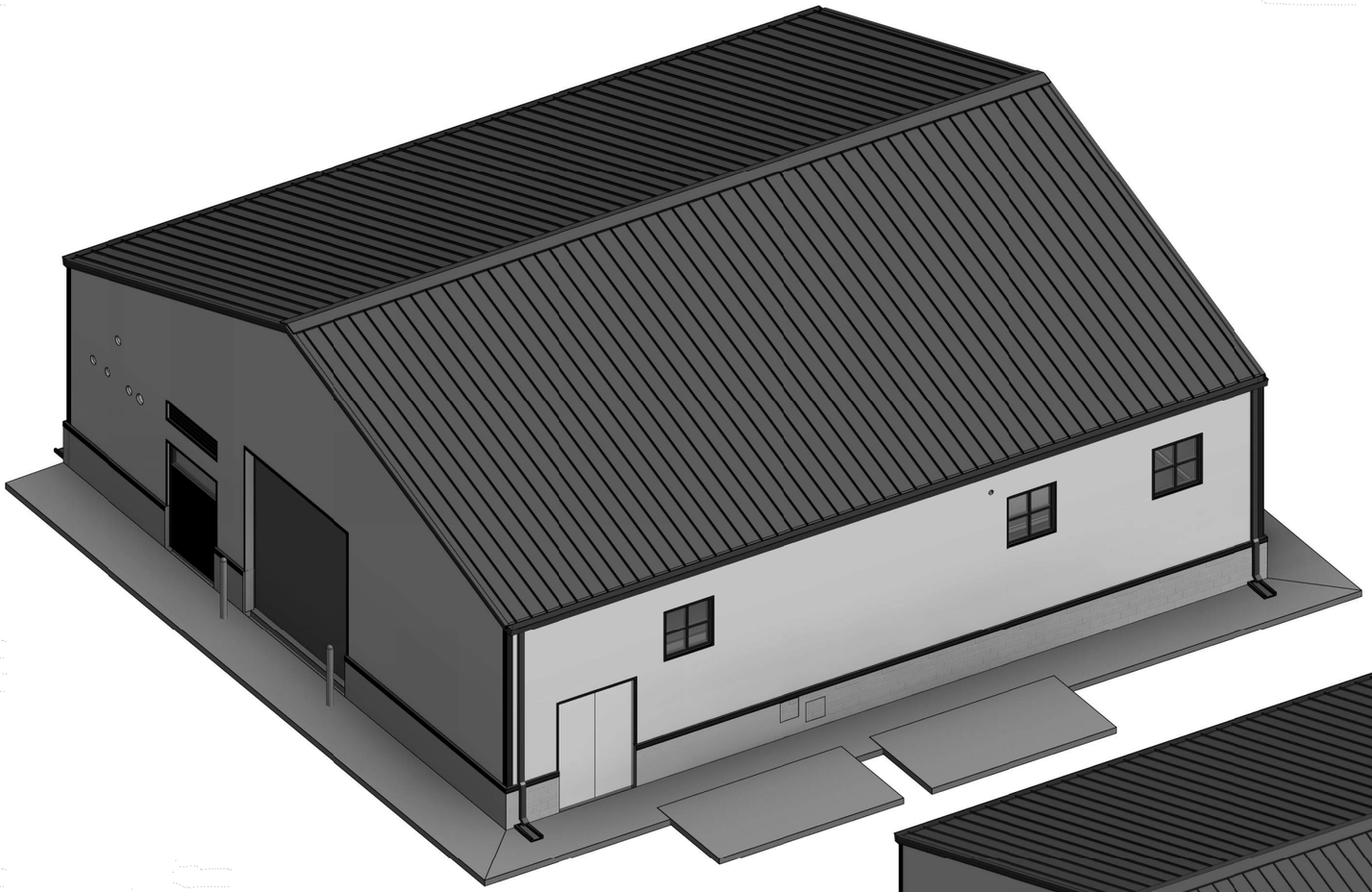

3D VIEW - EAST

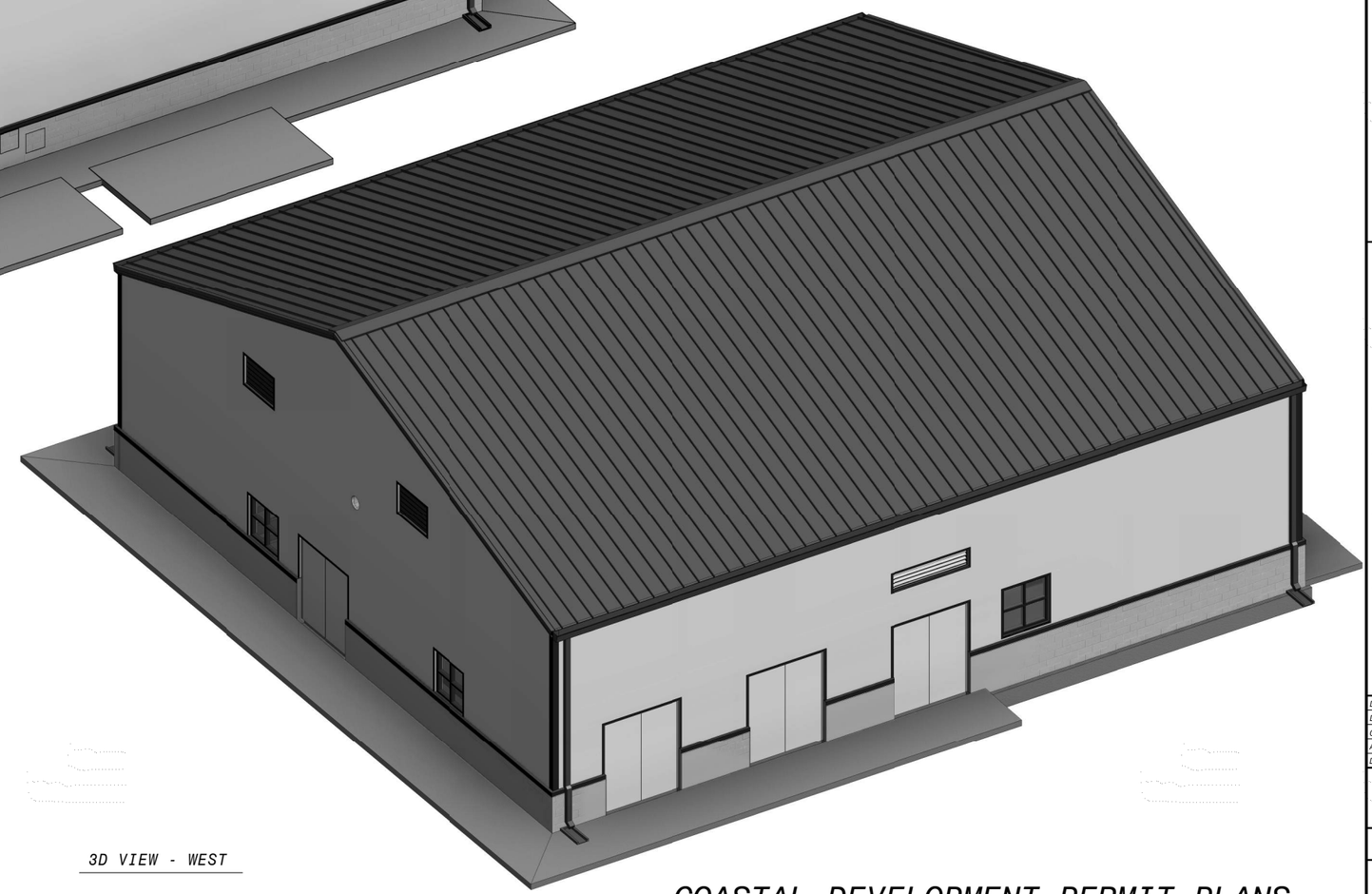

3D VIEW - WEST

# COASTAL DEVELOPMENT PERMIT PLANS

| DATE | REVISIONS AND RECORD OF USE | NO. | BY | CHK | APP |
|---|---|---|---|---|---|

Ashley & Vance ENGINEERING, INC

JOINT VENTURE

FILANC® BLACK & VEATCH

CITY OF MORRO BAY
FILANC BLACK & VEATCH DB PROPOSAL
WATER RECLAMATION FACILITY (WRF)

RO/UV BUILDING
STRUCTURAL
3D VIEWS

DESIGNED: I. SHOEBRIDGE
DETAILED: S. BENJAMIN
CHECKED: Checker
APPROVED: Approver
DATE: XX/XX/XXXX

0 1/2 1

IF THIS BAR DOES NOT MEASURE 1" THEN DRAWING IS NOT TO FULL SCALE

PROJECT NO.
81203

S-50-001
SHEET
OF XXX

PLOTTED: 7/29/2019 7:29:59 PM
D400530

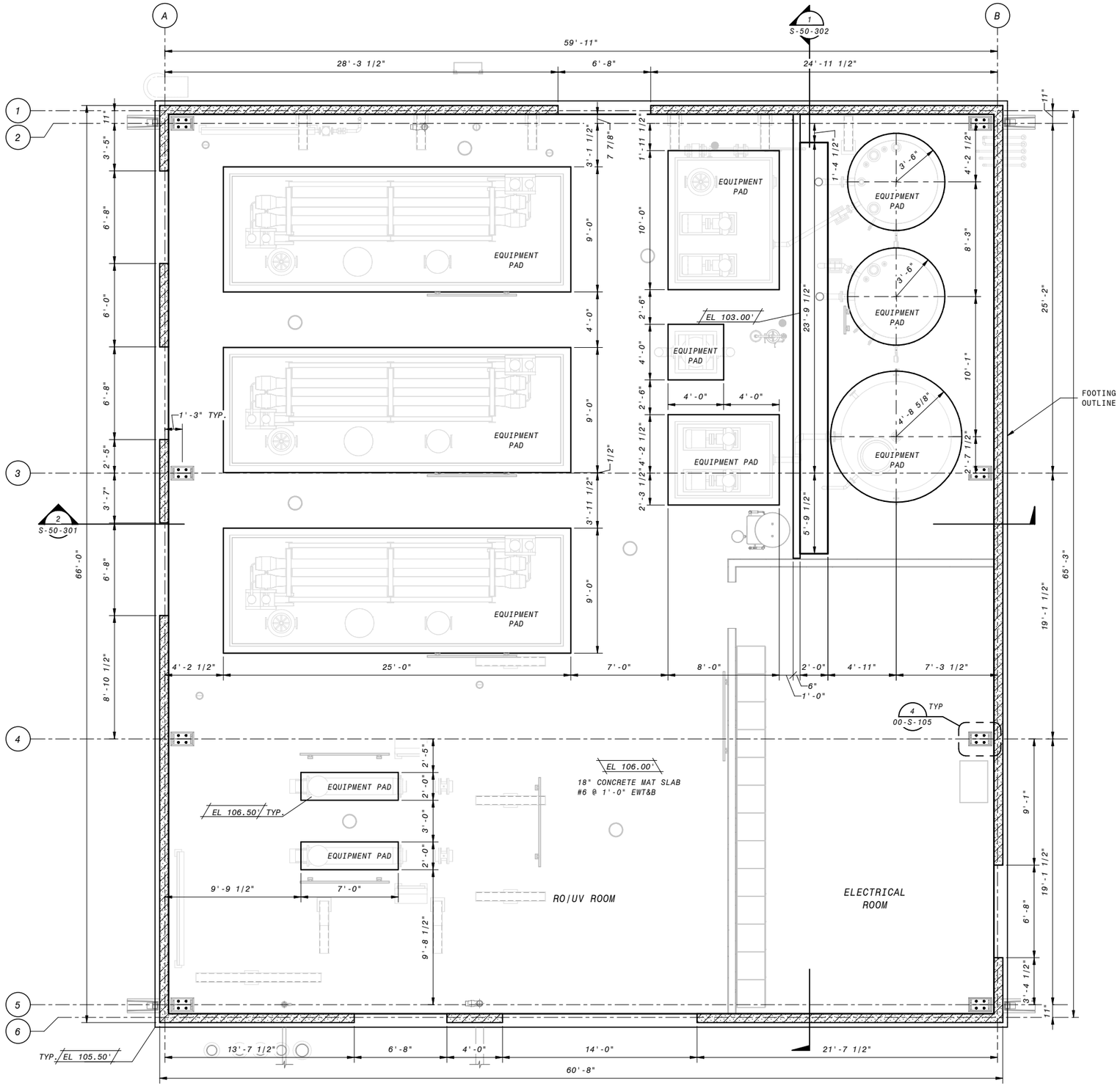


OPERATING FLOOR PLAN

1/4" = 1'-0"

## GENERAL NOTES

1. PLEASE SEE SOILS REPORT FOR ADDITIONAL SPECIFICATIONS AND RECOMMENDATIONS. IT IS THE DESIGN-BUILDER'S RESPONSIBILITY TO OBTAIN A COPY OF THE SOILS REPORT FROM THE OWNER OR OWNERS REPRESENTATIVE.
2. PRIOR TO THE DESIGN-BUILDER REQUESTING A BUILDING DEPARTMENT FOUNDATION INSPECTION, THE SOILS ENGINEER SHALL ADVISE THE BUILDING INSPECTOR IN WRITING THAT:

   A) BUILDING PAD WAS PREPARED IN ACCORDANCE WITH SOILS REPORT

   B) UTILITY TRENCHES HAVE BEEN PROPERLY BACKFILLED AND COMPACTED, AND

   C) FOUNDATION EXCAVATIONS, THE SOIL'S EXPANSIVE CHARACTERISTICS AND BEARING CAPACITY CONFORM TO THE SOILS REPORT.
3. SEE GENERAL NOTES & SPECIFICATIONS FOR ADDITIONAL REQUIRMENTS AND MATERIAL SPECIFICATIONS.
4. VERIFY ALL DIMENSIONS PRIOR TO COMMENCEMENT OF CONSTRUCTION.
5. ALL LAP SPLICES TO BE CLASS B PER DETAIL 1/00-S-101
6. SUBMIT EQUIPMENT WEIGHT FOR REVIEW PRIOR TO INSTALLATION. SEE DETAIL 1/00-S-105 FOR TYPICAL EQUIPMENT PADS. LOCATION AND SIZE OF EQUIPMENT PADS TO BE COORDINATED WITH MECHANICAL/ELECTRICAL/PLUMBING DRAWINGS. EQUIPMENT ANCHORAGE PER PROJECT SPECIFICATIONS.
7. REFER TO MECHANICAL/ELECTRICAL/PLUMBING DRAWINGS FOR SIZE AND LOCATIONS OF PIPE PENETRATIONS AND WALL OPENINGS. SEE DETAIL 9/00-S-101 FOR TYPICAL REINFORCEMENT REQUIREMENTS. COORDINATE PIPE PENETRATION SEAL WITH MECHANICAL ENGINEER OF RECORD.
8. COORDINATE LOCATION AND DETAILING FOR ATTACHMENT OF MECANICAL SUPPORTS WITH BUILDING MANUFACTURER AND MECHANICAL ENGINEER OF RECORD PRIOR TO INSTALLATION.

4' 2' 0' 4' 8'

1/4" = 1'-0"

# COASTAL DEVELOPMENT PERMIT PLANS

| NO. | BY | CHK | APP | REVISIONS AND RECORD OF USE | DATE |
|---|---|---|---|---|---|

Ashley & Vance ENGINEERING, INC

JOINT VENTURE

FILANC

BLACK & VEATCH

CITY OF MORRO BAY
FILANC BLACK & VEATCH DB PROPOSAL
WATER RECLAMATION FACILITY (WRF)

RO/UV BUILDING
STRUCTURAL
PLAN

DESIGNED: I. SHOEBRIDGE
DETAILED: S. BENJAMIN
CHECKED: Checker
APPROVED: Approver
DATE: XX/XX/XXXX

0 1/2 1

IF THIS BAR DOES NOT MEASURE 1" THEN DRAWING IS NOT TO FULL SCALE

PROJECT NO.
81203

S-50-101
SHEET
OF XXX

PLOTTED: 7/29/2019 7:30:00 PM

D400530

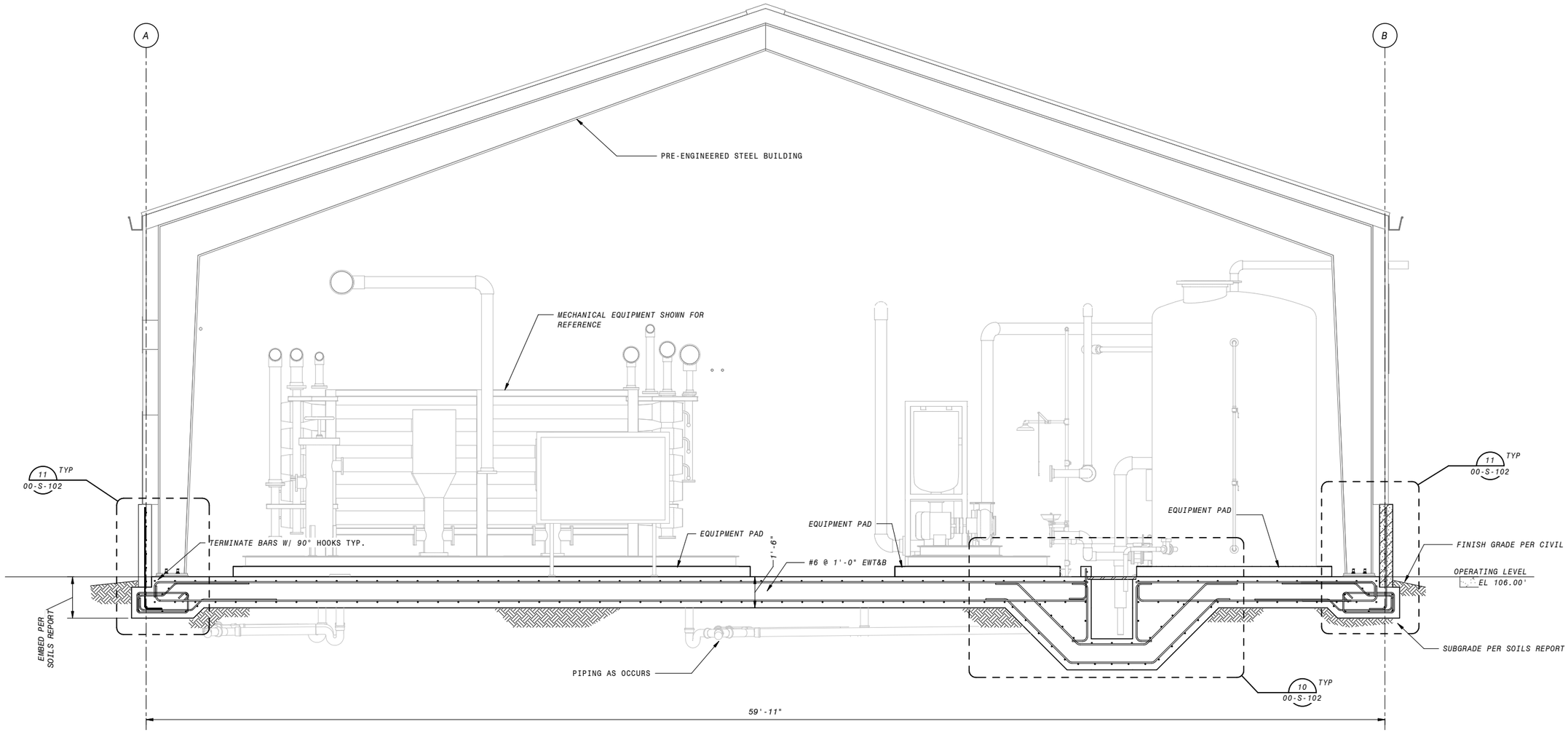


2 SECTION
S-50-101 3/8" = 1'-0"

## GENERAL SECTION NOTES

1. FOR GENERAL STRUCTURAL NOTES, SEE SHEETS 00-S-002 AND STANDARD SPECIFICATIONS.
2. REINFORCEMENT CLEAR COVER TO BE 2" EF FOR WALLS, 2" AT TOP OF SLABS, AND 3" AT BOTTOM OF SLABS, TYP., UNO
3. ALL LAP SPLICES TO BE CLASS B PER DETAIL 1/00-S-101.
4. REFER TO MECHANICAL DRAWINGS FOR SIZE AND LOCATIONS OF PIPE PENETRATIONS AND WALL OPENINGS. SEE DETAIL 9/00-S-101 FOR TYPICAL REINFORCEMENT REQUIREMENTS. COORDINATE PIPE PENETRATION SEAL WITH EOR (WHERE OCCURS).
5. COORDINATE EQUIPMENT WEIGHT WITH EOR PRIOR TO INSTALLATION. SEE DETAIL 1/00-S-105 FOR TYPICAL EQUIPMENT ANCHORAGE AND EQUIPMENT PADS.

12" 0' 1' 2' 3' 4' 5' 6' 7'
3/8" = 1'-0"

# COASTAL DEVELOPMENT PERMIT PLANS

| DATE | REVISIONS AND RECORD OF USE | NO. | BY | CHK | APP |
|---|---|---|---|---|---|

Ashley & Vance ENGINEERING, INC
JOINT VENTURE
FILANC
BLACK & VEATCH

CITY OF MORRO BAY
FILANC BLACK & VEATCH DB PROPOSAL
WATER RECLAMATION FACILITY (WRF)

RO/UV BUILDING
STRUCTURAL
SECTION & DETAILS 1

DESIGNED: I. SHOEBRIDGE
DETAILED: S. BENJAMIN
CHECKED: Checker
APPROVED: Approver
DATE: XX/XX/XXXX

0 1/2 1
IF THIS BAR DOES NOT MEASURE 1" THEN DRAWING IS NOT TO FULL SCALE

PROJECT NO.
81203

S-50-301
SHEET
OF XXX

PLOTTED: 7/29/2019 7:30:01 PM
0400530

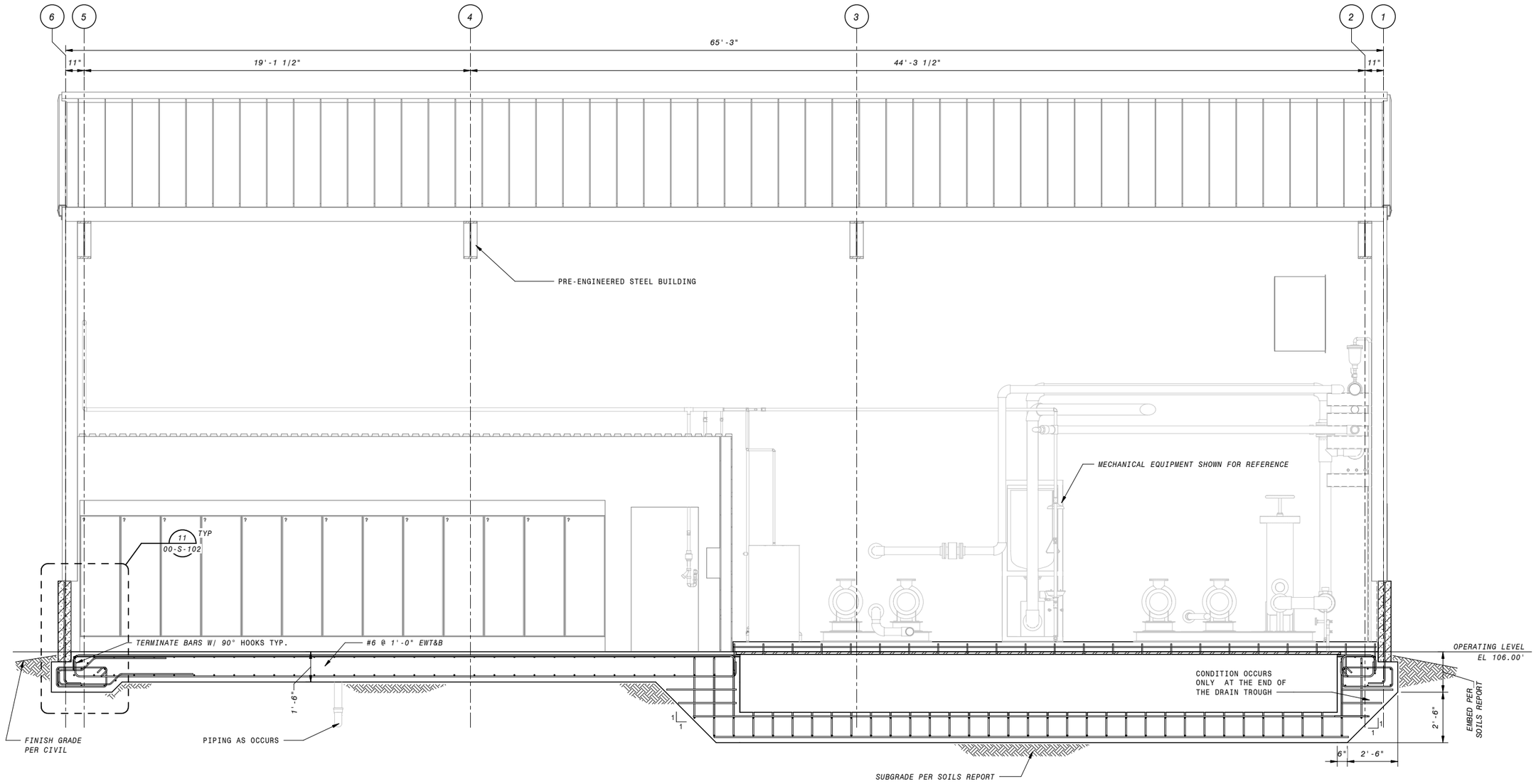


1 SECTION
S-50-101 3/8" = 1'-0"

## GENERAL SECTION NOTES

1. FOR GENERAL STRUCTURAL NOTES, SEE SHEETS 00-S-002 AND STANDARD SPECIFICATIONS.
2. REINFORCEMENT CLEAR COVER TO BE 2" EF FOR WALLS, 2" AT TOP OF SLABS, AND 3" AT BOTTOM OF SLABS, TYP., UNO
3. ALL LAP SPLICES TO BE CLASS B PER DETAIL 1/00-S-101.
4. REFER TO MECHANICAL DRAWINGS FOR SIZE AND LOCATIONS OF PIPE PENETRATIONS AND WALL OPENINGS. SEE DETAIL 9/00-S-101 FOR TYPICAL REINFORCEMENT REQUIREMENTS. COORDINATE PIPE PENETRATION SEAL WITH EOR (WHERE OCCURS).
5. COORDINATE EQUIPMENT WEIGHT WITH EOR PRIOR TO INSTALLATION. SEE DETAIL 1/00-S-105 FOR TYPICAL EQUIPMENT ANCHORAGE AND EQUIPMENT PADS.

12" 0' 1' 2' 3' 4' 5' 6' 7'
3/8" = 1'-0"

# COASTAL DEVELOPMENT PERMIT PLANS

| DATE | REVISIONS AND RECORD OF USE | NO. | BY | CHK | APP |
|---|---|---|---|---|---|

Ashley & Vance ENGINEERING, INC
JOINT VENTURE
FILANC
BLACK & VEATCH

CITY OF MORRO BAY
FILANC BLACK & VEATCH DB PROPOSAL
WATER RECLAMATION FACILITY (WRF)

RO/UV BUILDING
STRUCTURAL
SECTION & DETAILS 2

DESIGNED: I. SHOEBRIDGE
DETAILED: S. BENJAMIN
CHECKED: Checker
APPROVED: Approver
DATE: XX/XX/XXXX

0 1/2 1
IF THIS BAR DOES NOT MEASURE 1" THEN DRAWING IS NOT TO FULL SCALE

PROJECT NO.
81203

S-50-302
SHEET
OF XXX

PLOTTED: 7/29/2019 7:30:02 PM
D400530

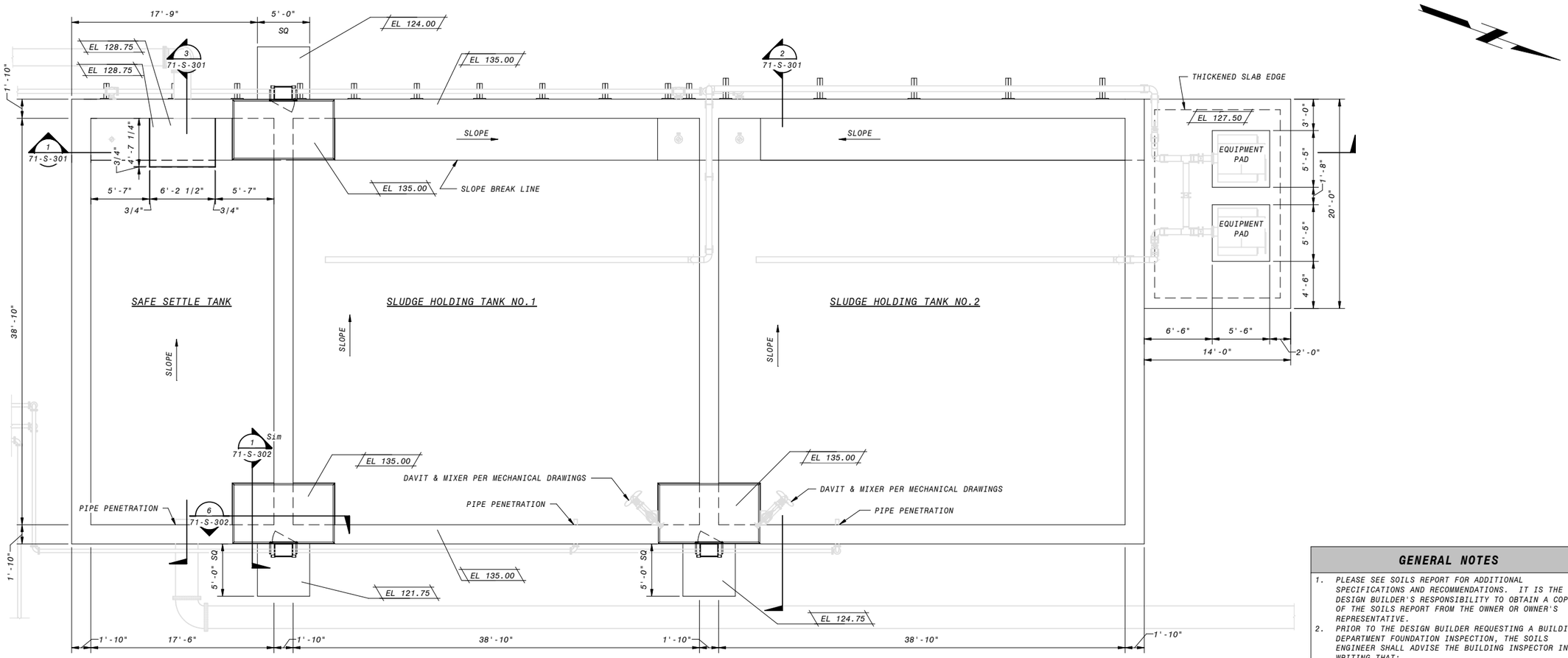


OPERATING LEVEL STRUCTURAL FLOOR PLAN

3/16" = 1'-0"

## GENERAL NOTES

1. PLEASE SEE SOILS REPORT FOR ADDITIONAL SPECIFICATIONS AND RECOMMENDATIONS. IT IS THE DESIGN BUILDER'S RESPONSIBILITY TO OBTAIN A COPY OF THE SOILS REPORT FROM THE OWNER OR OWNER'S REPRESENTATIVE.
2. PRIOR TO THE DESIGN BUILDER REQUESTING A BUILDING DEPARTMENT FOUNDATION INSPECTION, THE SOILS ENGINEER SHALL ADVISE THE BUILDING INSPECTOR IN WRITING THAT:
   A. BUILDING PAD WAS PREPARED IN ACCORDANCE WITH SOILS REPORT
   B. UTILITY TRENCHES HAVE BEEN PROPERLY BACKFILLED AND COMPACTED, AND
   C. FOUNDATION EXCAVATIONS, THE SOIL'S EXPANSIVE CHARACTERISTICS AND BEARING CAPACITY CONFORM TO THE SOILS REPORT.
3. FOR GENERAL STRUCTURAL NOTES, SEE SHEETS 00-S-002 AND STANDARD SPECIFICATIONS.
4. VERIFY ALL DIMENSIONS PRIOR TO COMMENCEMENT OF CONSTRUCTION.
5. ALL LAP SPLICES TO BE CLASS B PER DETAIL 1/00-S-101
6. SUBMIT EQUIPMENT WEIGHT FOR REVIEW PRIOR TO INSTALLATION. SEE DETAIL 1/00-S-105 FOR TYPICAL EQUIPMENT PADS. LOCATION AND SIZE OF EQUIPMENT PADS TO BE COORDINATED WITH MECHANICAL/ ELECTRICAL/ PLUMBING DRAWINGS. EQUIPMENT ANCHORAGE PER PROJECT SPECIFICATIONS.
7. REFER TO MECHANICAL/ELECTRICAL/PLUMBING DRAWINGS FOR SIZE AND LOCATIONS OF PIPE PENETRATIONS AND WALL OPENINGS. SEE DETAIL 9/00-S-101 FOR TYPICAL REINFORCEMENT REQUIREMENTS. COORDINATE PIPE PENETRATION SEAL WITH MECHANICAL ENGINEER OF RECORD.
8. FOR TYPICAL MAT SLAB EDGE, REFER TO DETAIL 13/00-S-102
9. PROVIDE COMPLETE DESIGN PACKAGE FOR DAVIT AND MIXERS.

6" 4' 2' 0' 5' 10'

3/16" = 1'-0"

# COASTAL DEVELOPMENT PERMIT PLANS

| NO. | BY | CHK | APP | REVISIONS AND RECORD OF USE | DATE |
|---|---|---|---|---|---|

Ashley & Vance ENGINEERING, INC

JOINT VENTURE

FILANC BLACK & VEATCH

CITY OF MORRO BAY
FILANC BLACK & VEATCH DB PROPOSAL
RECLAMATION FACILITY (WRF)

SLUDGE HOLDING TANKS AND SAFE SETTLE TANK
STRUCTURAL
PLAN

DESIGNED: I. SHOEBRIDGE
DETAILED: S. BENJAMIN
CHECKED: Checker
APPROVED: Approver
DATE:

0 1/2 1
IF THIS BAR DOES NOT MEASURE 1" THEN DRAWING IS NOT TO FULL SCALE

PROJECT NO.
400530

71-S-101
SHEET
OF

PLOTTED: 7/29/2019 2:20:51 PM
D400530

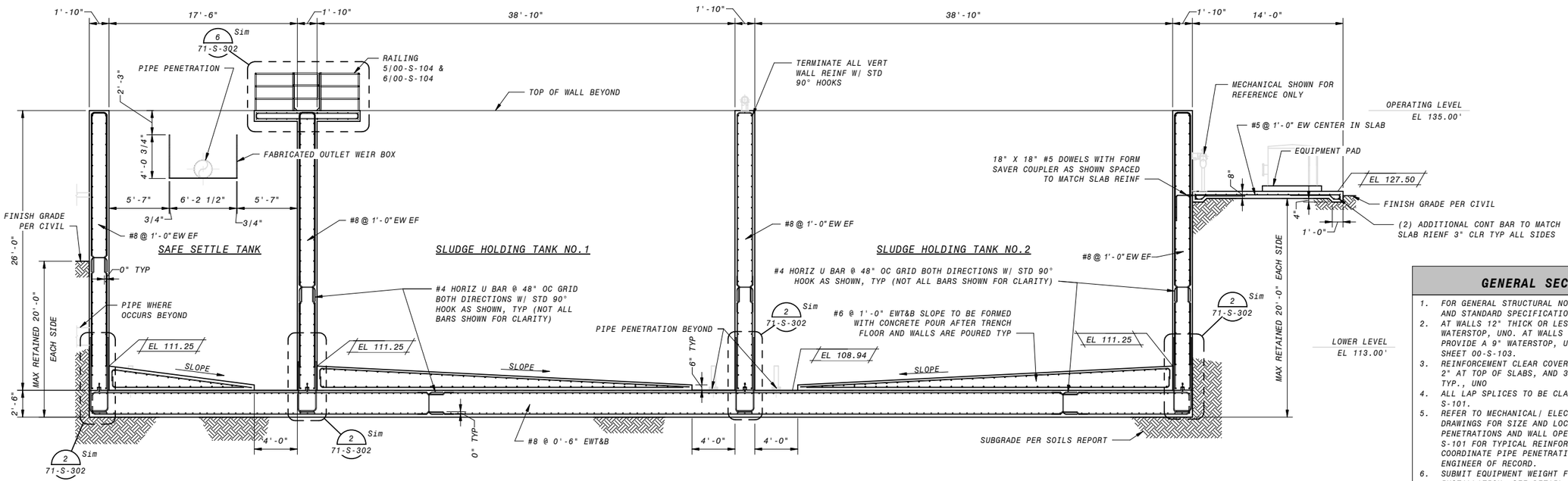


1 SECTION
71-S-101 3/16" = 1'-0"

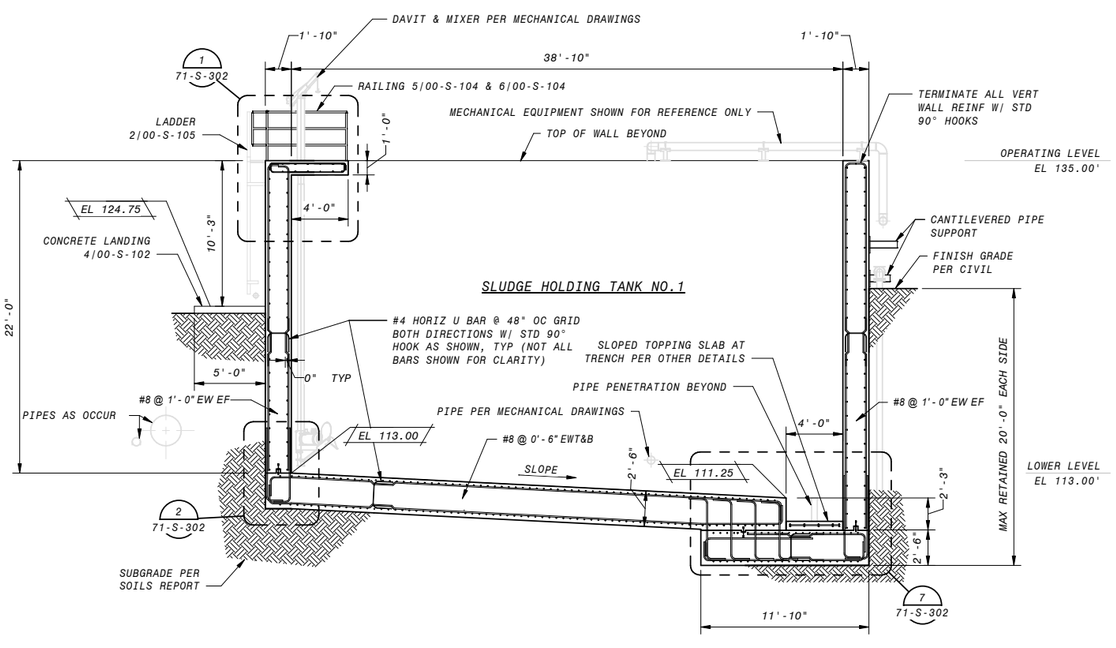


2 SECTION
71-S-101 3/16" = 1'-0"

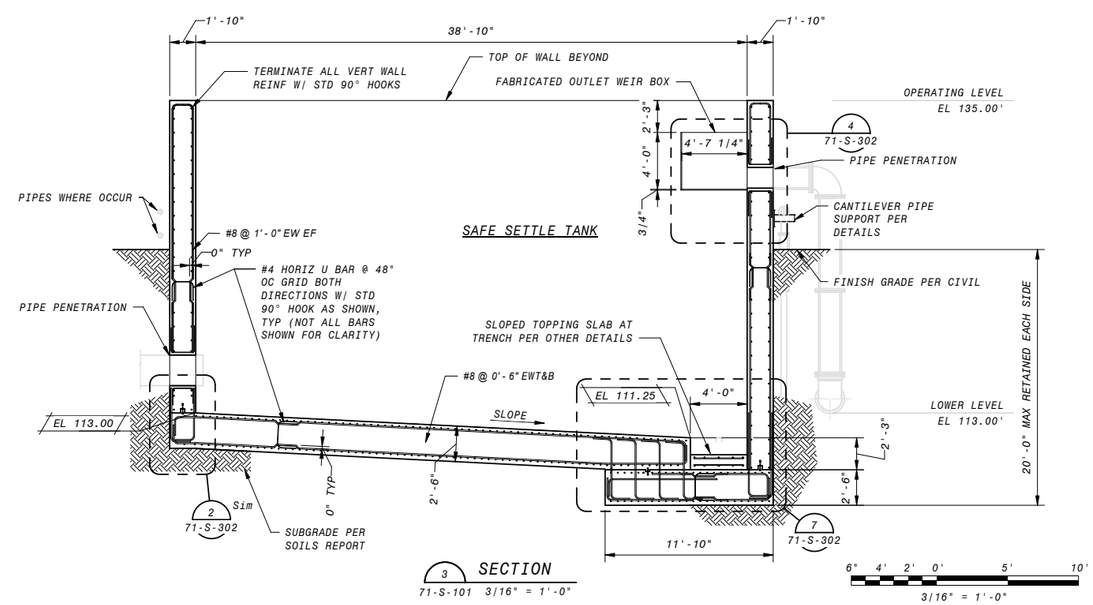


3 SECTION
71-S-101 3/16" = 1'-0"

## GENERAL SECTION NOTES

1. FOR GENERAL STRUCTURAL NOTES, SEE SHEETS 00-S-002 AND STANDARD SPECIFICATIONS.
2. AT WALLS 12" THICK OR LESS, PROVIDE A 6" WATERSTOP, UNO. AT WALLS GREATER THAN 12" THICK, PROVIDE A 9" WATERSTOP, UNO. REFER TO DETAIL 2 ON SHEET 00-S-103.
3. REINFORCEMENT CLEAR COVER TO BE 2" EF FOR WALLS, 2" AT TOP OF SLABS, AND 3" AT BOTTOM OF SLABS, TYP., UNO
4. ALL LAP SPLICES TO BE CLASS B PER DETAIL 1/00-S-101.
5. REFER TO MECHANICAL/ ELECTRICAL/ PLUMBING DRAWINGS FOR SIZE AND LOCATIONS OF PIPE PENETRATIONS AND WALL OPENINGS. SEE DETAIL 9/00-S-101 FOR TYPICAL REINFORCEMENT REQUIREMENTS. COORDINATE PIPE PENETRATION SEAL WITH MECHANICAL ENGINEER OF RECORD.
6. SUBMIT EQUIPMENT WEIGHT FOR REVIEW PRIOR TO INSTALLATION. SEE DETAIL 1/00-S-105 FOR TYPICAL EQUIPMENT PADS. LOCATION AND SIZE OF EQUIPMENT PADS TO BE COORDINATED WITH MECHANICAL/ ELECTRICAL/ PLUMBING DRAWINGS. EQUIPMENT ANCHORAGE PER PROJECT SPECIFICATIONS.
7. FOR TYPICAL MAT SLAB EDGE, REFER TO DETAIL 13/00-S-102.
8. PROVIDE COMPLETE DESIGN PACKAGE FOR DAVIT AND MIXERS.

| DATE | REVISIONS AND RECORD OF USE | NO. | BY | CHK | APP |
|---|---|---|---|---|---|

Ashley & Vance ENGINEERING, INC

JOINT VENTURE

FILANC

BLACK & VEATCH

CITY OF MORRO BAY
FILANC BLACK & VEATCH DB PROPOSAL
RECLAMATION FACILITY (WRF)

SLUDGE HOLDING TANKS AND SAFE SETTLE
STRUCTURAL
SECTIONS & DETAILS 1

DESIGNED: I. SHOEBRIDGE
DETAILED: S. BENJAMIN
CHECKED: Checker
APPROVED: Approver
DATE:

0 1/2 1
IF THIS BAR DOES NOT MEASURE 1" THEN DRAWING IS NOT TO FULL SCALE

PROJECT NO. 400530

71-S-301
SHEET OF

6" 4' 2' 0' 5' 10'
3/16" = 1'-0"

COASTAL DEVELOPMENT PERMIT PLANS

PLOTTED: 7/29/2019 2:20:52 PM
D400530

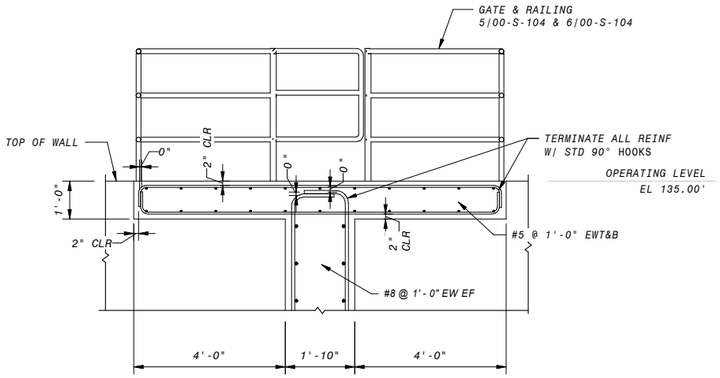


6 PLATFORM TO INTERIOR WALL
71-S-101 1/2" = 1'-0"

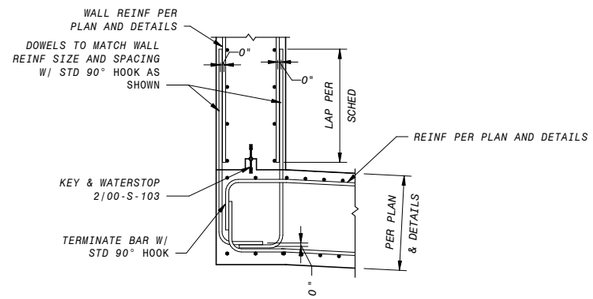


2 TYP WALL TO SLAB DETAIL
71-S-301 1/2" = 1'-0"

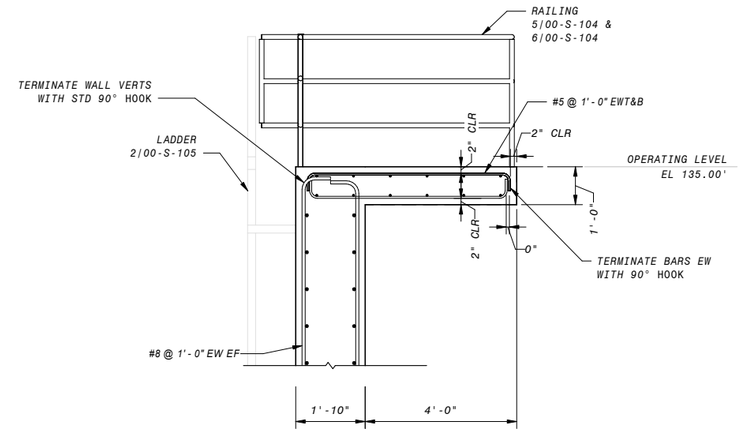


1 PLATFORM TO EXTERIOR WALL
71-S-101 1/2" = 1'-0"

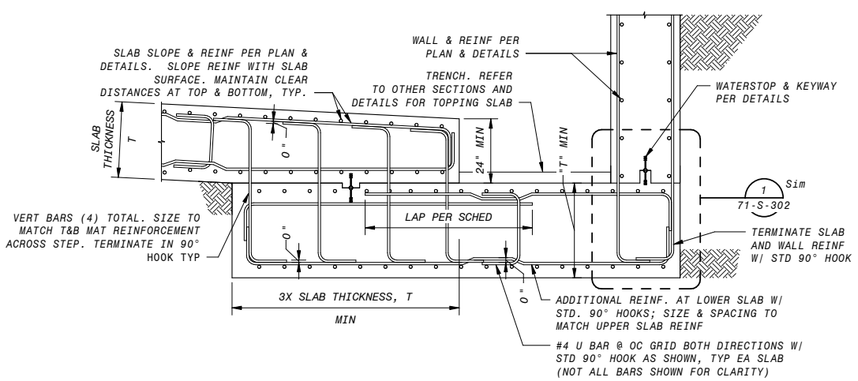


7 TRENCH DETAIL AT SLUGE TANKS
71-S-301 NO SCALE

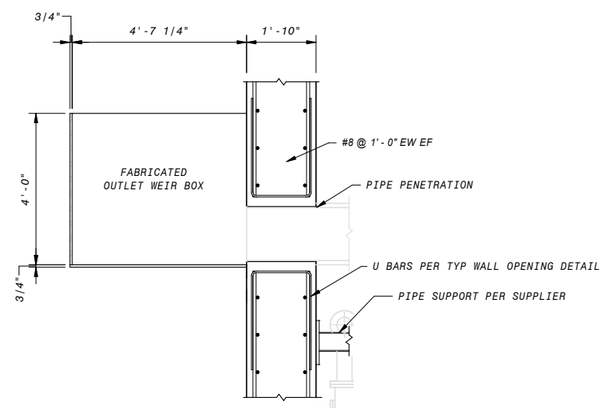


4 PIPE PENETRATION AT FABRICATED OUTLET BOX
71-S-301 1/2" = 1'-0"

## GENERAL SECTION NOTES

1. FOR GENERAL STRUCTURAL NOTES, SEE SHEET 00-S-002 AND STANDARD SPECIFICATIONS.
2. AT WALLS 12" THICK OR LESS, PROVIDE A 6" WATERSTOP, UNO. AT WALLS GREATER THAN 12" THICK, PROVIDE A 9" WATERSTOP, UNO. REFER TO DETAIL 2 ON SHEET 00-S-103.
3. REINFORCEMENT CLEAR COVER TO BE 2" EF FOR WALLS, 2" AT TOP OF SLABS, AND 3" AT BOTTOM OF SLABS, TYP., UNO
4. ALL LAP SPLICES TO BE CLASS B PER DETAIL 1/00-S-101.
5. REFER TO MECHANICAL DRAWINGS FOR SIZE AND LOCATIONS OF PIPE PENETRATIONS AND WALL OPENINGS. SEE DETAIL 9/00-S-101 FOR TYPICAL REINFORCEMENT REQUIREMENTS. COORDINATE PIPE PENETRATION SEAL WITH EOR (WHERE OCCURS).

| DATE | REVISIONS AND RECORD OF USE | NO. BY | CHK APP |
|---|---|---|---|

Ashley & Vance ENGINEERING, INC
JOINT VENTURE
FILANC
BLACK & VEATCH

CITY OF MORRO BAY
FILANC BLACK & VEATCH DB PROPOSAL
RECLAMATION FACILITY (WRF)

SLUDGE HOLDING TANKS AND SAFE SETTLE
STRUCTURAL
SECTIONS & DETAILS 2

DESIGNED: I. SHOEBRIDGE
DETAILED: S. BENJAMIN
CHECKED: Checker
APPROVED: Approver
DATE:

0 1/2 1
IF THIS BAR DOES NOT MEASURE 1" THEN DRAWING IS NOT TO FULL SCALE

PROJECT NO.
400530

71-S-302
SHEET
OF

COASTAL DEVELOPMENT PERMIT PLANS

PLOTTED: 7/29/2019 2:20:52 PM
D400530

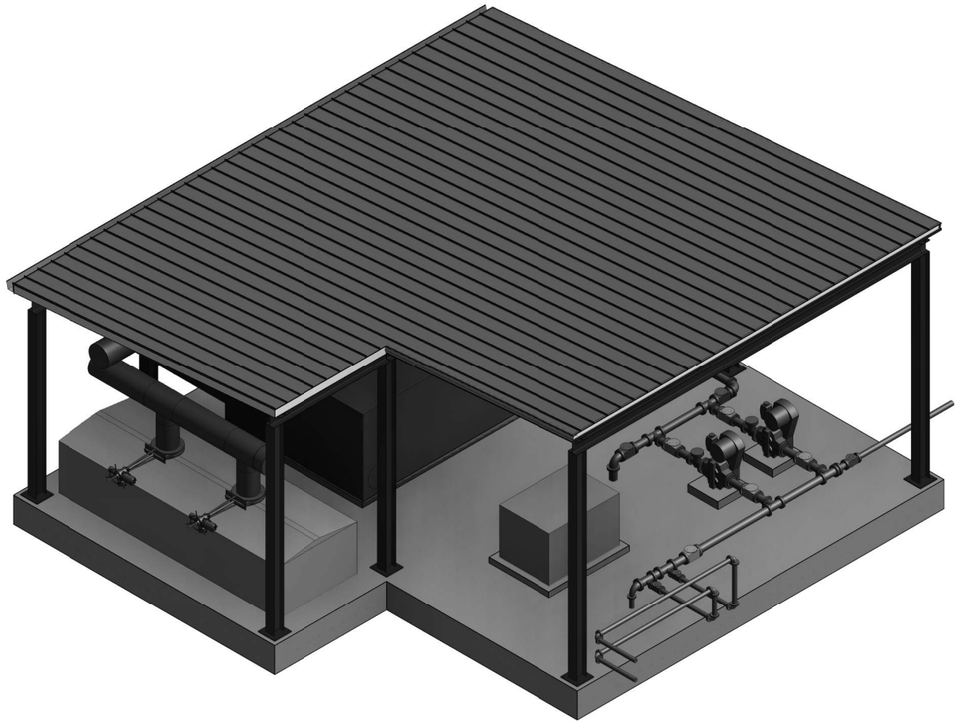

3D VIEW - NORTH

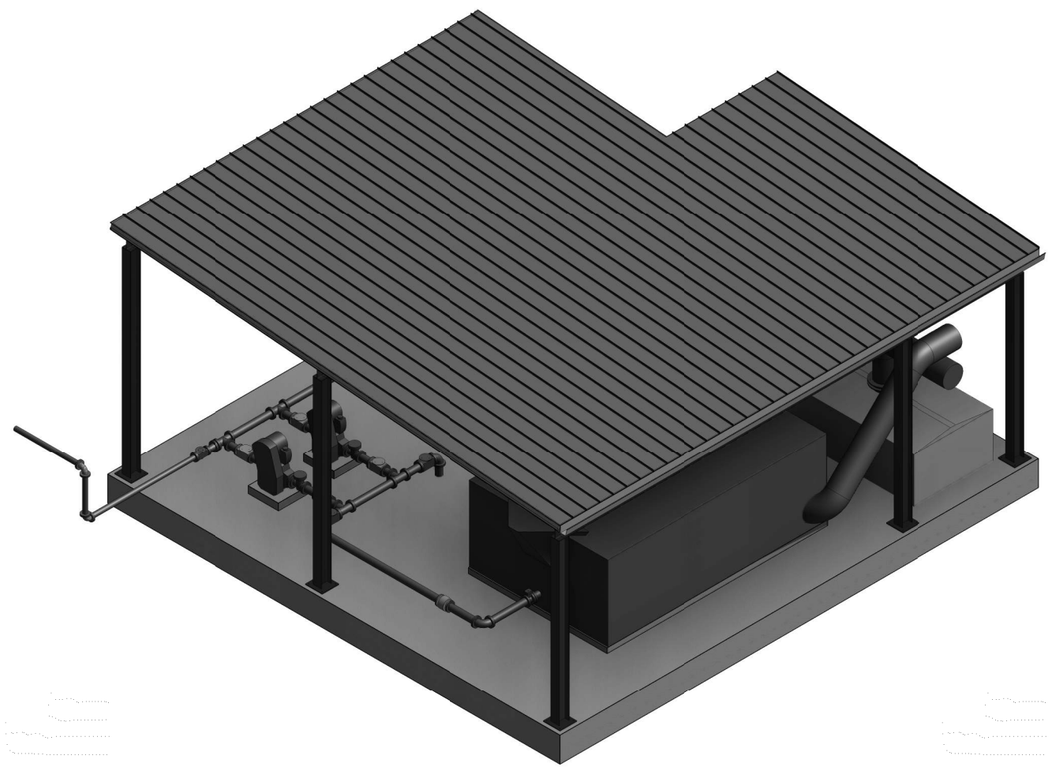

3D VIEW - SOUTH

COASTAL DEVELOPMENT PERMIT PLANS

| DATE | REVISIONS AND RECORD OF USE | NO. | BY | CHK | APP |
|---|---|---|---|---|---|

Ashley & Vance ENGINEERING, INC

JOINT VENTURE

FILANC

BLACK & VEATCH

CITY OF MORRO BAY
FILANC BLACK & VEATCH DB PROPOSAL
RECLAMATION FACILITY (WRF)

RESIDUALS AREA - DEWATERING FACILITY
STRUCTURAL
3D VIEWS

DESIGNED: Designer
DETAILED: Author
CHECKED: Checker
APPROVED: Approver
DATE:

0 1/2 1
IF THIS BAR DOES NOT MEASURE 1" THEN DRAWING IS NOT TO FULL SCALE

PROJECT NO.
400530

72-S-001
SHEET
OF

PLOTTED: 7/29/2019 7:53:51 PM
D400530

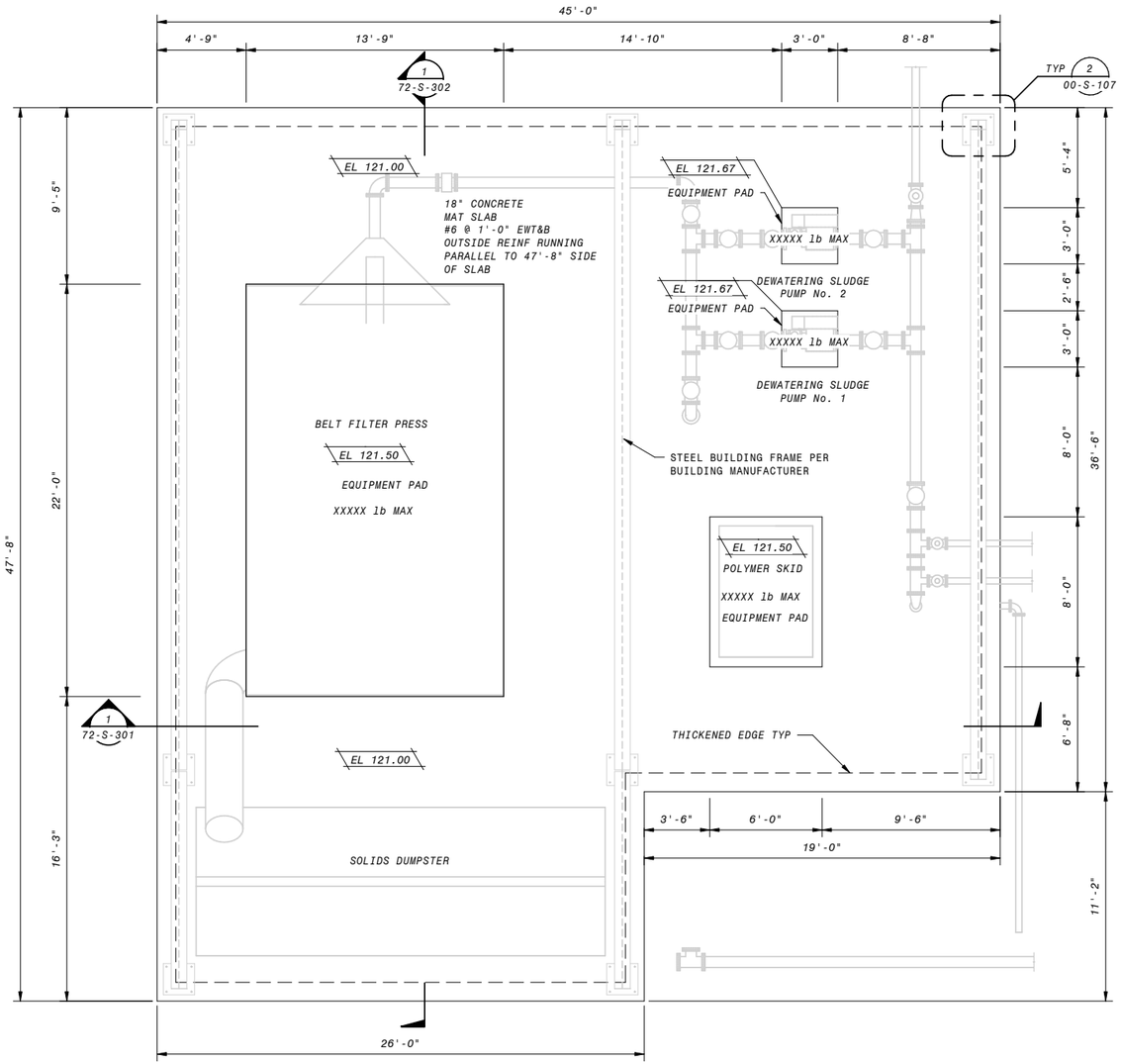


OPERATING LEVEL STRUCTURAL FLOOR PLAN

1/4" = 1'-0"

## GENERAL NOTES

1. PLEASE SEE SOILS REPORT FOR ADDITIONAL SPECIFICATIONS AND RECOMMENDATIONS. IT IS THE DESIGN-BUILDER'S RESPONSIBILITY TO OBTAIN A COPY OF THE SOILS REPORT FROM THE OWNER OR OWNERS REPRESENTATIVE.

2. PRIOR TO THE DESIGN-BUILDER REQUESTING A BUILDING DEPARTMENT FOUNDATION INSPECTION, THE SOILS ENGINEER SHALL ADVISE THE BUILDING INSPECTOR IN WRITING THAT:

   A) BUILDING PAD WAS PREPARED IN ACCORDANCE WITH SOILS REPORT

   B) UTILITY TRENCHES HAVE BEEN PROPERLY BACKFILLED AND COMPACTED, AND

   C) FOUNDATION EXCAVATIONS, THE SOIL'S EXPANSIVE CHARACTERISTICS AND BEARING CAPACITY CONFORM TO THE SOILS REPORT.

3. SEE GENERAL NOTES & SPECIFICATIONS FOR ADDITIONAL REQUIRMENTS AND MATERIAL SPECIFICATIONS.

4. VERIFY ALL DIMENSIONS PRIOR TO COMMENCEMENT OF CONSTRUCTION.

5. ALL LAP SPLICES TO BE CLASS B PER DETAIL 1/00-S-101

6. SUBMIT EQUIPMENT WEIGHT FOR REVIEW PRIOR TO INSTALLATION. SEE DETAIL 1/00-S-105 FOR TYPICAL EQUIPMENT PADS. LOCATION AND SIZE OF EQUIPMENT PADS TO BE COORDINATED WITH MECHANICAL/ELECTRICAL/PLUMBING DRAWINGS. EQUIPMENT ANCHORAGE PER PROJECT SPECIFICATIONS.

7. REFER TO MECHANICAL/ELECTRICAL/PLUMBING DRAWINGS FOR SIZE AND LOCATIONS OF PIPE PENETRATIONS AND WALL OPENINGS. SEE DETAIL 9/00-S-101 FOR TYPICAL REINFORCEMENT REQUIREMENTS. COORDINATE PIPE PENETRATION SEAL WITH MECHANICAL ENGINEER OF RECORD.

8. COORDINATE LOCATION AND DETAILING FOR ATTACHMENT OF MECANICAL SUPPORTS WITH BUILDING MANUFACTURER AND MECHANICAL ENGINEER OF RECORD PRIOR TO INSTALLATION.

4' 2' 0' 4' 8'

1/4" = 1'-0"

# COASTAL DEVELOPMENT PERMIT PLANS

| DATE | REVISIONS AND RECORD OF USE | NO. | BY | CHK | APP |
|---|---|---|---|---|---|

Ashley & Vance ENGINEERING, INC

JOINT VENTURE

FILANC

BLACK & VEATCH

CITY OF MORRO BAY
FILANC BLACK & VEATCH DB PROPOSAL
RECLAMATION FACILITY (WRF)

RESIDUALS AREA - DEWATERING FACILITY
STRUCTURAL
PLAN

DESIGNED: I. SHOEBRIDGE
DETAILED: S. BENJAMIN
CHECKED: Checker
APPROVED: Approver
DATE:

0 1/2 1

IF THIS BAR DOES NOT MEASURE 1" THEN DRAWING IS NOT TO FULL SCALE

PROJECT NO.
400530

72-S-101
SHEET
OF

PLOTTED: 7/29/2019 7:53:51 PM
D400530

## GENERAL SECTION NOTES

1. FOR GENERAL STRUCTURAL NOTES, SEE SHEETS S-00-002 AND STANDARD SPECIFICATIONS.
2. REINFORCEMENT CLEAR COVER TO BE 2" EF FOR WALLS, 2" AT TOP OF SLABS, AND 3" AT BOTTOM OF SLABS, TYP., UNO
3. ALL LAP SPLICES TO BE CLASS B PER DETAIL 1/S-00-101.
4. REFER TO MECHANICAL DRAWINGS FOR SIZE AND LOCATIONS OF PIPE PENETRATIONS AND OPENINGS.
   SEE DETAIL 9/00-S-101 FOR TYPICAL REINFORCEMENT REQUIREMENTS. COORDINATE PIPE PENETRATION SEAL WITH EOR (WHERE OCCURS).
5. COORDINATE EQUIPMENT WEIGHT WITH EOR PRIOR TO INSTALLATION. SEE DETAIL 1/00-S-105 FOR TYPICAL EQUIPMENT ANCHORAGE AND EQUIPMENT PADS.

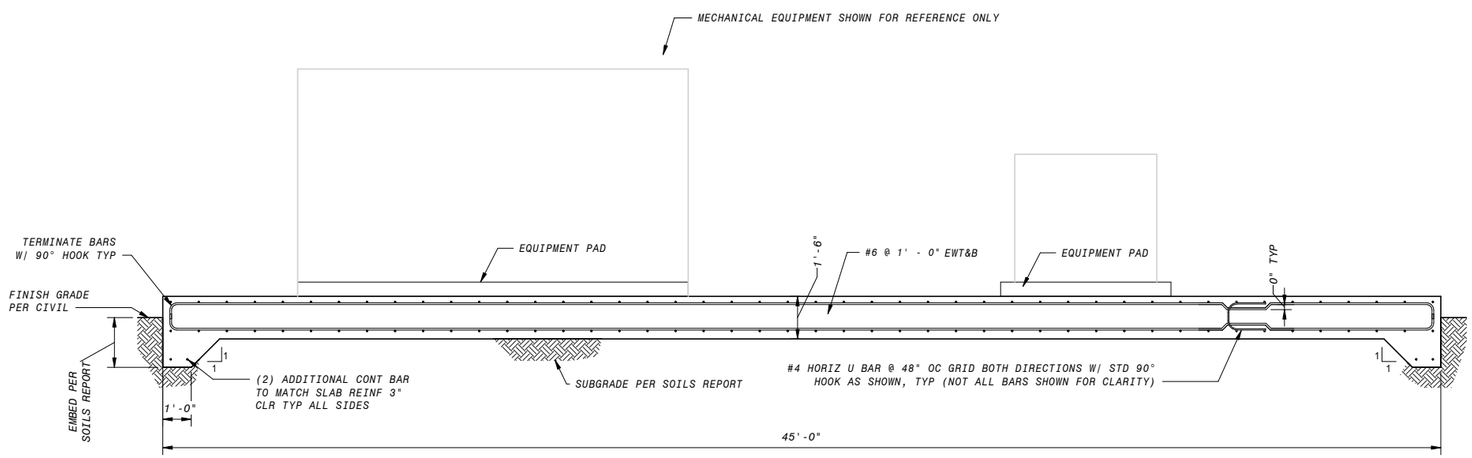


1 SECTION
72-S-101 3/8" = 1'-0"

12" 0' 1' 2' 3' 4' 5' 6' 7'
3/8" = 1'-0"

COASTAL DEVELOPMENT PERMIT PLANS

| NO. | BY | CHK | APP | DATE | REVISIONS AND RECORD OF USE |
|---|---|---|---|---|---|

Ashley & Vance ENGINEERING, INC

JOINT VENTURE

FILANC

BLACK & VEATCH

CITY OF MORRO BAY
FILANC BLACK & VEATCH DB PROPOSAL
RECLAMATION FACILITY (WRF)

RESIDUALS AREA - DEWATERING FACILITY
STRUCTURAL
SECTIONS & DETAILS 1

DESIGNED: I. SHOEBRIDGE
DETAILED: S. BENJAMIN
CHECKED: Checker
APPROVED: Approver
DATE:

0 1/2 1
IF THIS BAR DOES NOT MEASURE 1" THEN DRAWING IS NOT TO FULL SCALE

PROJECT NO.
400530

72-S-301
SHEET
OF

PLOTTED: 7/29/2019 7:53:51 PM
D400530

## GENERAL SECTION NOTES

1. FOR GENERAL STRUCTURAL NOTES, SEE SHEETS S-00-002 AND STANDARD SPECIFICATIONS.
2. REINFORCEMENT CLEAR COVER TO BE 2" EF FOR WALLS, 2" AT TOP OF SLABS, AND 3" AT BOTTOM OF SLABS, TYP., UNO
3. ALL LAP SPLICES TO BE CLASS B PER DETAIL 1/S-00-101.
4. REFER TO MECHANICAL DRAWINGS FOR SIZE AND LOCATIONS OF PIPE PENETRATIONS AND OPENINGS.
   SEE DETAIL 9/00-S-101 FOR TYPICAL REINFORCEMENT REQUIREMENTS. COORDINATE PIPE PENETRATION SEAL WITH EOR (WHERE OCCURS).
5. COORDINATE EQUIPMENT WEIGHT WITH EOR PRIOR TO INSTALLATION. SEE DETAIL 1/00-S-105 FOR TYPICAL EQUIPMENT ANCHORAGE AND EQUIPMENT PADS.

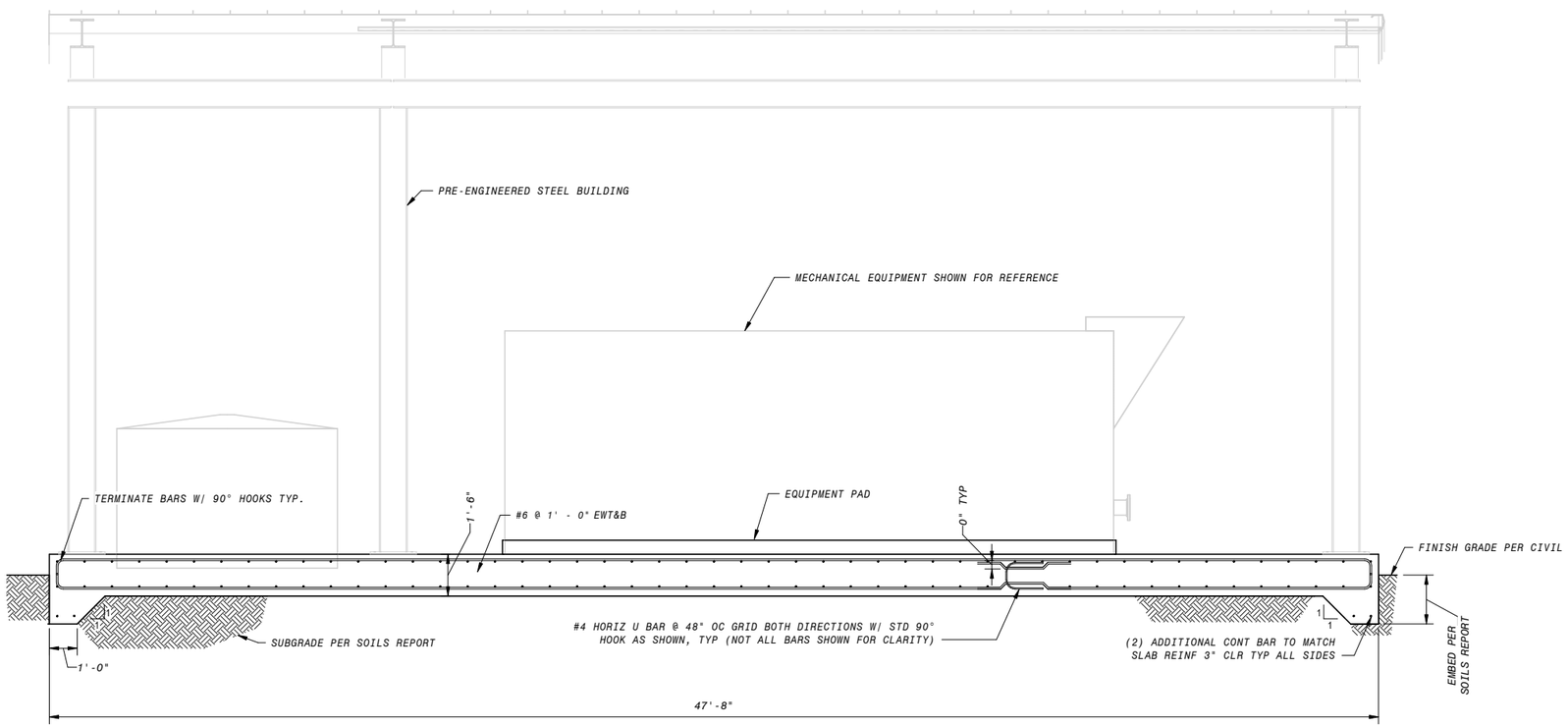


1 SECTION
72-S-101 3/8" = 1'-0"

12" 0' 1' 2' 3' 4' 5' 6' 7'
3/8" = 1'-0"

COASTAL DEVELOPMENT PERMIT PLANS

| NO. | BY | CHK | APP | DATE | REVISIONS AND RECORD OF USE |
|---|---|---|---|---|---|

Ashley & Vance ENGINEERING, INC
JOINT VENTURE
FILANC
BLACK & VEATCH

CITY OF MORRO BAY
FILANC BLACK & VEATCH DB PROPOSAL
RECLAMATION FACILITY (WRF)

RESIDUALS AREA - DEWATERING FACILITY
STRUCTURAL
SECTIONS & DETAILS 2

DESIGNED: I. SHOEBRIDGE
DETAILED: S. BENJAMIN
CHECKED: Checker
APPROVED: Approver
DATE:

0 1/2 1
IF THIS BAR DOES NOT MEASURE 1" THEN DRAWING IS NOT TO FULL SCALE

PROJECT NO.
400530

72-S-302
SHEET
OF

PLOTTED: 7/29/2019 7:53:52 PM
D400530

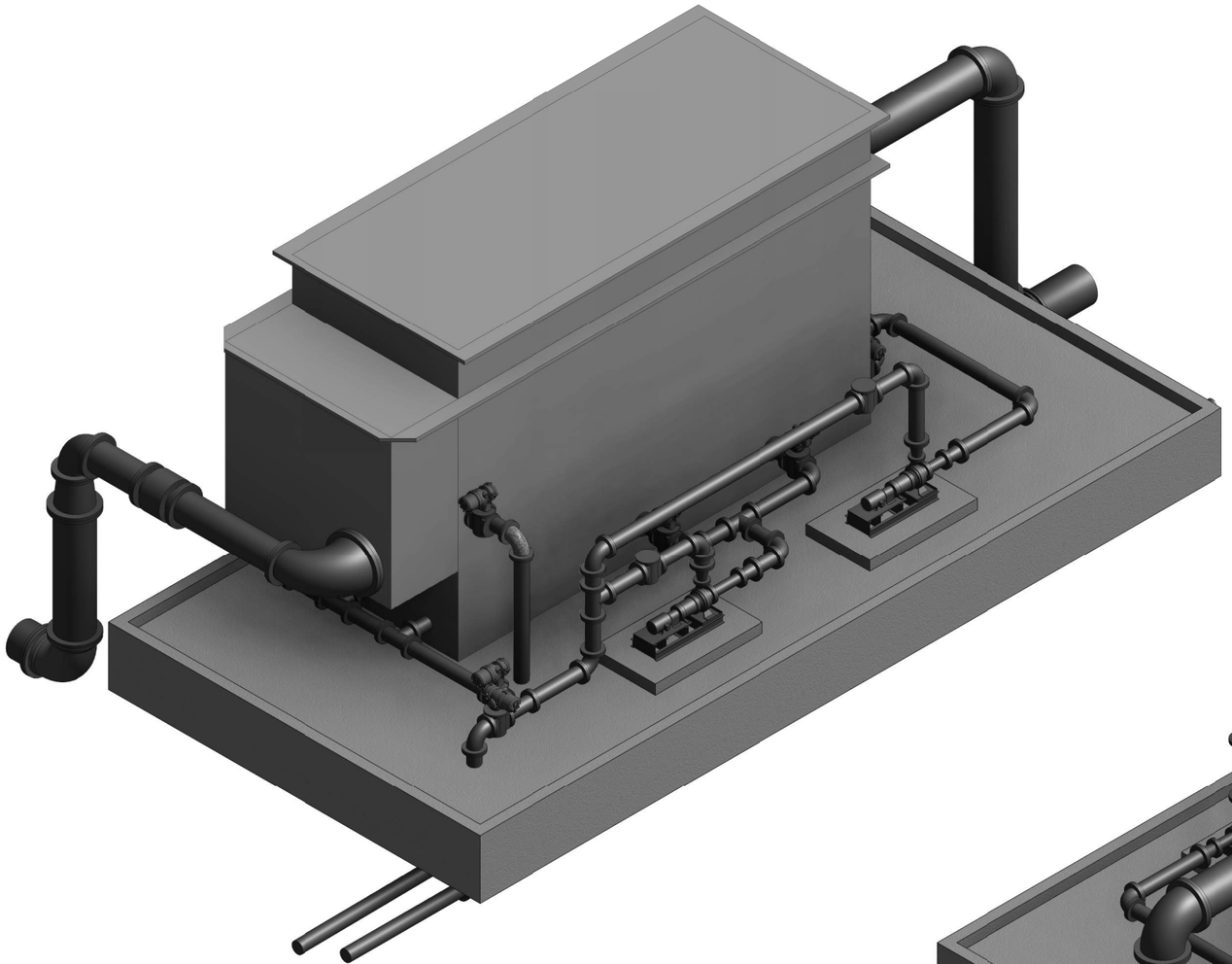

3D VIEW - NORTH

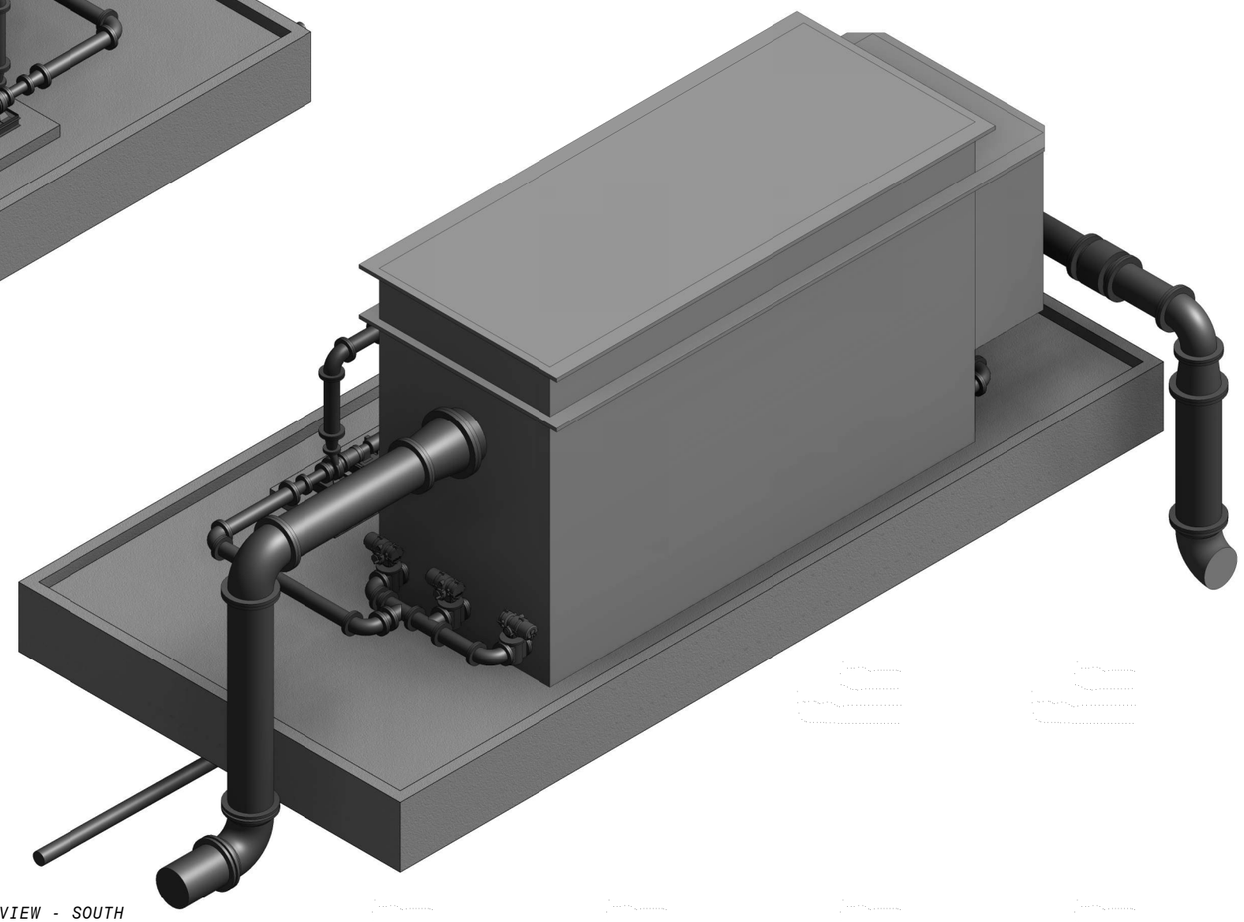

3D VIEW - SOUTH

COASTAL DEVELOPMENT PERMIT PLANS

| DATE | REVISIONS AND RECORD OF USE | NO. | BY | CHK | APP |
|---|---|---|---|---|---|

Ashley & Vance ENGINEERING, INC

JOINT VENTURE

FILANC®

BLACK & VEATCH

CITY OF MORRO BAY
FILANC BLACK & VEATCH DB PROPOSAL
MORRO BAY WRF

SAFE FILTER AREA
STRUCTURAL
3D VIEWS

DESIGNED: Designer
DETAILED: Author
CHECKED: Checker
APPROVED: Approver
DATE:

0 1/2 1

IF THIS BAR DOES NOT MEASURE 1" THEN DRAWING IS NOT TO FULL SCALE

PROJECT NO.
400530

73-S-001
SHEET
OF

PLOTTED: 7/29/2019 7:35:48 PM
D400530

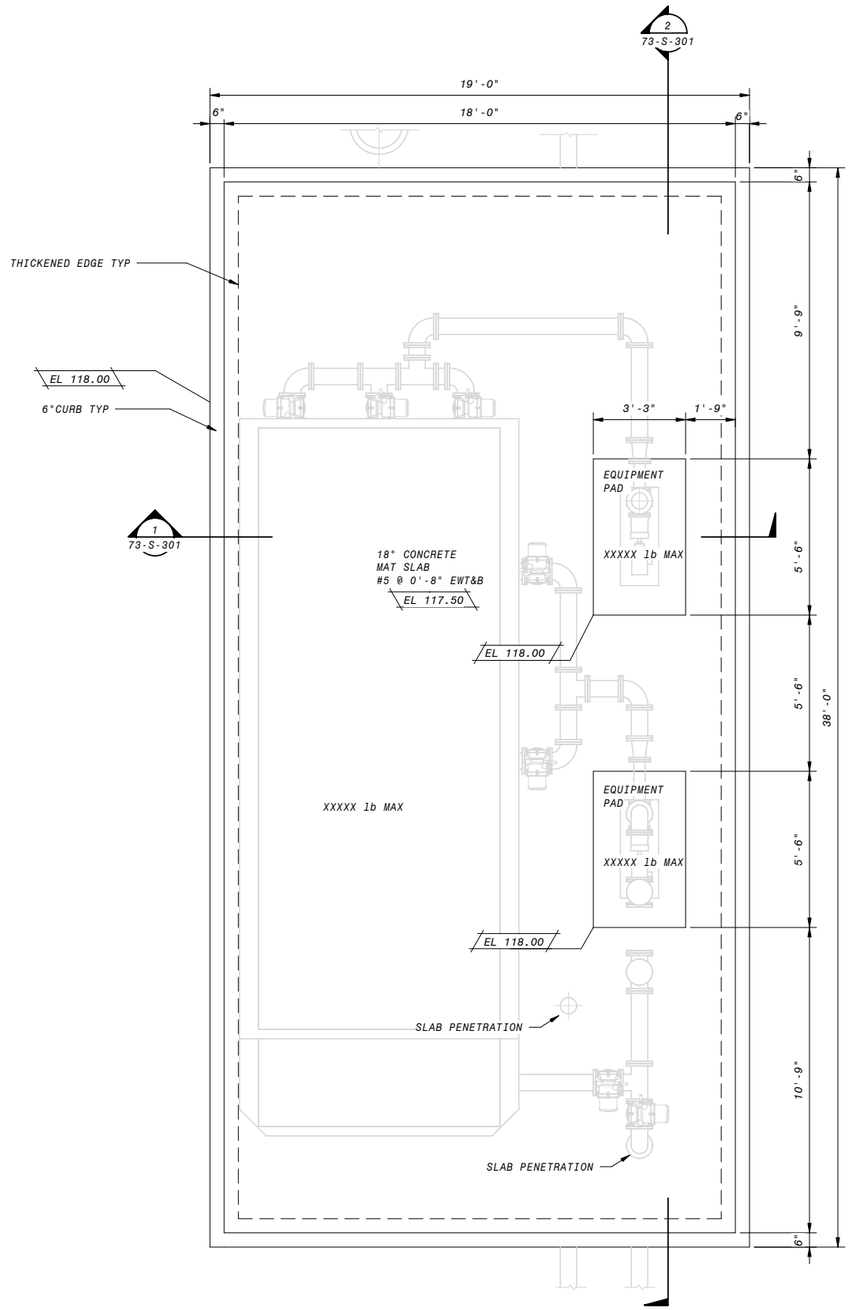


OPERATING LEVEL STRUCTURAL FLOOR PLAN

3/8" = 1'-0"

## GENERAL STRUCTURAL NOTES

1. PLEASE SEE SOILS REPORT FOR ADDITIONAL SPECIFICATIONS AND RECOMMENDATIONS. IT IS THE DESIGN BUILDER'S RESPONSIBILITY TO OBTAIN A COPY OF THE SOILS REPORT FROM THE OWNER OR OWNERS REPRESENTATIVE.

2. PRIOR TO THE DESIGN-BUILDER REQUESTING A BUILDING DEPARTMENT FOUNDATION INSPECTION, THE SOILS ENGINEER SHALL ADVISE THE BUILDING INSPECTOR IN WRITING THAT:

A) BUILDING PAD WAS PREPARED IN ACCORDANCE WITH SOILS REPORT

B) UTILITY TRENCHES HAVE BEEN PROPERLY BACKFILLED AND COMPACTED, AND

C) FOUNDATION EXCAVATIONS, THE SOIL'S EXPANSIVE CHARACTERISTICS AND BEARING CAPACITY CONFORM TO THE SOILS REPORT.

3. SEE GENERAL NOTES & SPECIFICATIONS FOR ADDITIONAL REQUIREMENTS AND MATERIAL SPECIFICATIONS.

4. VERIFY ALL DIMENSIONS PRIOR TO COMMENCEMENT OF CONSTRUCTION.

5. OUTSIDE LAYER OF MAT SLAB REINFORCEMENT TO BE PLACED IN THE LONG DIRECTION. INSIDE LAYER OF MAT SLAB REINFORCEMENT TO BE PLACED IN THE SHORT DIRECTION. TYPICAL, UNLESS NOTED OTHERWISE.

6. ALL LAP SPLICES TO BE CLASS B PER DETAIL 1/00-S-101

7. SUBMIT EQUIPMENT WEIGHT FOR REVIEW PRIOR TO INSTALLATION. SEE DETAIL 1/00-S-105 FOR TYPICAL EQUIPMENT PADS. LOCATION AND SIZE OF EQUIPMENT PADS TO BE COORDINATED WITH MECHANICAL/ELECTRICAL/PLUMBING DRAWINGS. EQUIPMENT ANCHORAGE PER PROJECT SPECIFICATIONS.

8. REFER TO MECHANICAL/ELECTRICAL/PLUMBING DRAWINGS FOR SIZE AND LOCATIONS OF PIPE PENETRATIONS AND WALL OPENINGS. SEE DETAIL 9/00-S-101 FOR TYPICAL REINFORCEMENT REQUIREMENTS. COORDINATE PIPE PENETRATION SEAL WITH MECHANICAL ENGINEER OF RECORD.

9. ALL SLAB REINFORCEMENT MUST TERMINATE WITH A STANDARD 90DEG HOOK PER DETAIL 5/00-S-101.

12" 0' 1' 2' 3' 4' 5' 6' 7'

3/8" = 1'-0"

# COASTAL DEVELOPMENT PERMIT PLANS

| DATE | REVISIONS AND RECORD OF USE | NO. | BY | CHK | APP |
|---|---|---|---|---|---|

Ashley & Vance ENGINEERING, INC

JOINT VENTURE

FILANC

BLACK & VEATCH

CITY OF MORRO BAY
FILANC BLACK & VEATCH DB PROPOSAL
MORRO BAY WRF

SAFE FILTER AREA
STRUCTURAL
PLAN

DESIGNED: I. SHOEBRIDGE
DETAILED: S. BENJAMIN
CHECKED: Checker
APPROVED: Approver
DATE:

0 1/2 1

IF THIS BAR DOES NOT MEASURE 1" THEN DRAWING IS NOT TO FULL SCALE

PROJECT NO.
400530

73-S-101
SHEET
OF

PLOTTED: 7/29/2019 7:35:48 PM

D400530

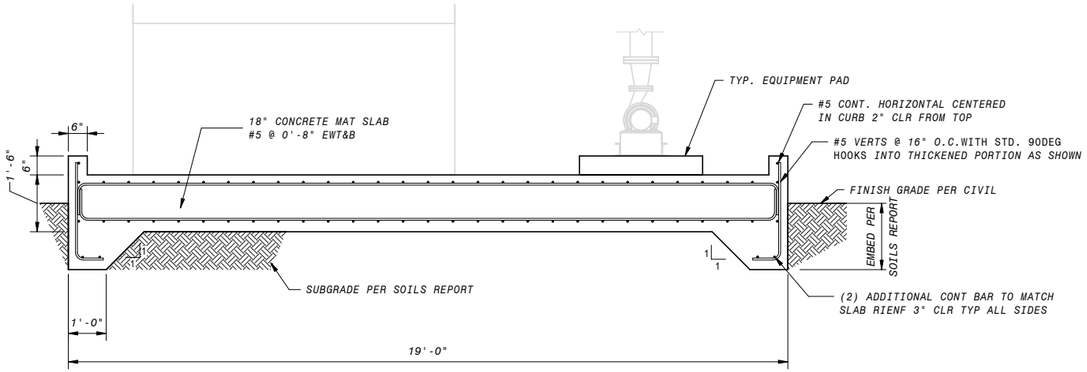


1 SECTION
73-S-101 1/2" = 1'-0"

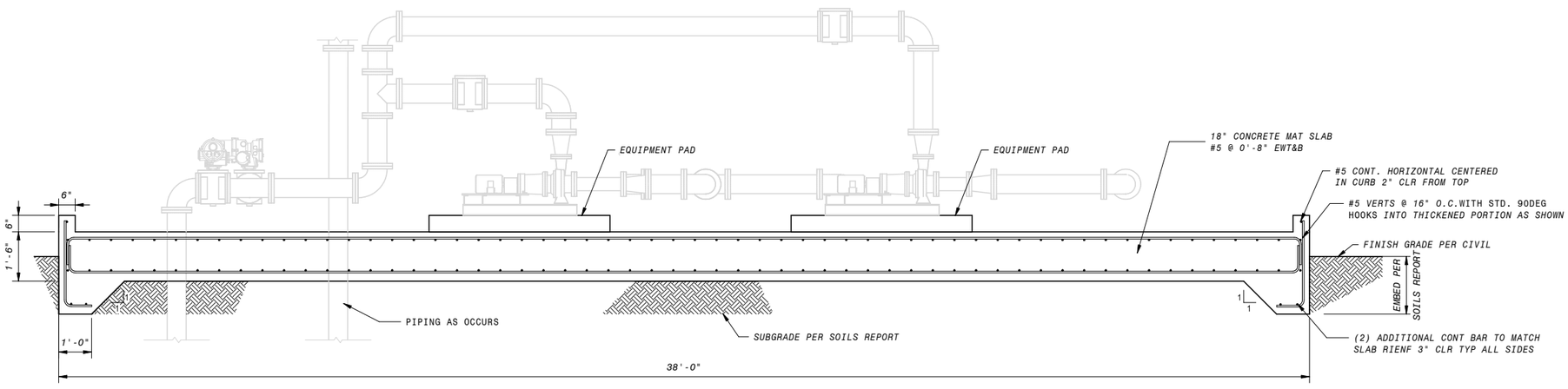


2 SECTION
73-S-101 1/2" = 1'-0"

## GENERAL SECTION NOTES

1. FOR GENERAL STRUCTURAL NOTES, SEE SHEETS 00-S-002 AND STANDARD SPECIFICATIONS.
2. REINFORCEMENT CLEAR COVER TO BE 2" EF FOR WALLS, 2" AT TOP OF SLABS, AND 3" AT BOTTOM OF SLABS, TYP., UNO
3. ALL LAP SPLICES TO BE CLASS B PER DETAIL 1/00-S-101.
4. REFER TO MECHANICAL DRAWINGS FOR SIZE AND LOCATIONS OF PIPE PENETRATIONS AND WALL OPENINGS. SEE DETAIL 9/00-S-101 FOR TYPICAL REINFORCEMENT REQUIREMENTS. COORDINATE PIPE PENETRATION SEAL WITH EOR (WHERE OCCURS).
5. SUBMIT EQUIPMENT WEIGHT FOR REVIEW PRIOR TO INSTALLATION. SEE DETAIL 1/00-S-105 FOR TYPICAL EQUIPMENT PADS. LOCATION & SIZE OF EQUIPMENT PADS TO BE COORDINATED WITH MECHANICAL/ELECTRICAL/PLUMBING DRAWINGS. EQUIPMENT ANCHORAGE PER PROJECT SPECIFICATIONS.
6. ALL SLAB REINFORCEMENT MUST TERMINATE WITH A STANDARD 90DEG HOOK PER DETAIL 05/00-S-101.

| DATE | REVISIONS AND RECORD OF USE | NO. | BY | CHK | APP |
|---|---|---|---|---|---|

Ashley & Vance ENGINEERING, INC

JOINT VENTURE

FILANC BLACK & VEATCH

CITY OF MORRO BAY
FILANC BLACK & VEATCH DB PROPOSAL
MORRO BAY WRF

SAFE FILTER AREA
STRUCTURAL
SECTIONS & DETAILS

DESIGNED: I. SHOEBRIDGE
DETAILED: S. BENJAMIN
CHECKED: Checker
APPROVED: Approver
DATE:

0 1/2 1
IF THIS BAR DOES NOT MEASURE 1" THEN DRAWING IS NOT TO FULL SCALE

PROJECT NO.
400530

73-S-301
SHEET
OF

12' 6' 0' 1' 2' 3' 4' 5'
1/2" = 1'-0"

COASTAL DEVELOPMENT PERMIT PLANS

PLOTTED: 7/29/2019 7:35:48 PM
D400530

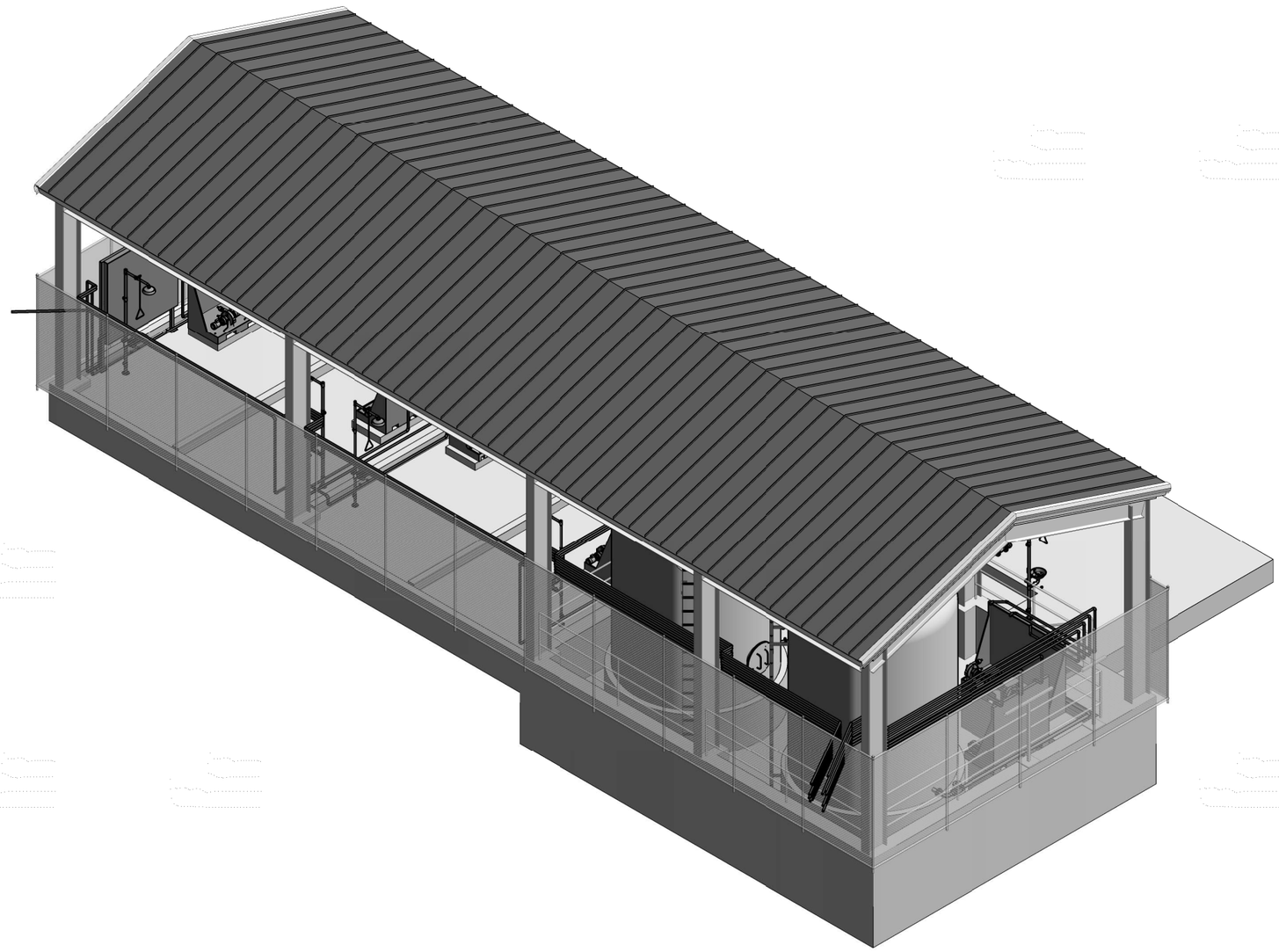

3D VIEW

COASTAL DEVELOPMENT PERMIT PLANS

| DATE | REVISIONS AND RECORD OF USE | NO. | BY | CHK | APP |
|---|---|---|---|---|---|

Ashley & Vance ENGINEERING, INC

JOINT VENTURE

FILANC BLACK & VEATCH

CITY OF MORRO BAY
FILANC BLACK & VEATCH DB PROPOSAL
MORRO BAY WRF

CHEMICAL FACILITY
STRUCTURAL
3D VIEWS

DESIGNED: I. SHOEBRIDGE
DETAILED: S. BENJAMIN
CHECKED: Checker
APPROVED: Approver
DATE:

0 1/2 1
IF THIS BAR DOES NOT MEASURE 1" THEN DRAWING IS NOT TO FULL SCALE

PROJECT NO.
400530

90-S-001
SHEET
OF

PLOTTED: 7/29/2019 7:43:47 PM
D400530

## GENERAL NOTES

1. PLEASE SEE SOILS REPORT FOR ADDITIONAL SPECIFICATIONS AND RECOMMENDATIONS. IT IS THE DESIGN-BUILDER'S RESPONSIBILITY TO OBTAIN A COPY OF THE SOILS REPORT FROM THE OWNER OR OWNERS REPRESENTATIVE.
2. PRIOR TO THE DESIGN-BUILDER REQUESTING A BUILDING DEPARTMENT FOUNDATION INSPECTION, THE SOILS ENGINEER SHALL ADVISE THE BUILDING INSPECTOR IN WRITING THAT:

   A) BUILDING PAD WAS PREPARED IN ACCORDANCE WITH SOILS REPORT
   B) UTILITY TRENCHES HAVE BEEN PROPERLY BACKFILLED AND COMPACTED, AND
   C) FOUNDATION EXCAVATIONS, THE SOIL'S EXPANSIVE CHARACTERISTICS AND BEARING CAPACITY CONFORM TO THE SOILS REPORT.
3. SEE GENERAL NOTES & SPECIFICATIONS FOR ADDITIONAL REQUIREMENTS AND MATERIAL SPECIFICATIONS.
4. VERIFY ALL DIMENSIONS PRIOR TO COMMENCEMENT OF CONSTRUCTION.
5. ALL LAP SPLICES TO BE CLASS B PER DETAIL 1/00-S-101
6. SUBMIT EQUIPMENT WEIGHT FOR REVIEW PRIOR TO INSTALLATION. SEE DETAIL 1/00-S-105 FOR TYPICAL EQUIPMENT PADS. LOCATION AND SIZE OF EQUIPMENT PADS TO BE COORDINATED WITH MECHANICAL/ELECTRICAL/PLUMBING DRAWINGS. EQUIPMENT ANCHORAGE PER PROJECT SPECIFICATIONS.
7. REFER TO MECHANICAL/ELECTRICAL/PLUMBING DRAWINGS FOR SIZE AND LOCATIONS OF PIPE PENETRATIONS AND WALL OPENINGS. SEE DETAIL 9/00-S-101 FOR TYPICAL REINFORCEMENT REQUIREMENTS. COORDINATE PIPE PENETRATION SEAL WITH MECHANICAL ENGINEER OF RECORD.
8. COORDINATE LOCATION AND DETAILING FOR ATTACHMENT OF MECHANICAL SUPPORTS WITH BUILDING MANUFACTURER AND MECHANICAL ENGINEER OF RECORD PRIOR TO INSTALLATION.

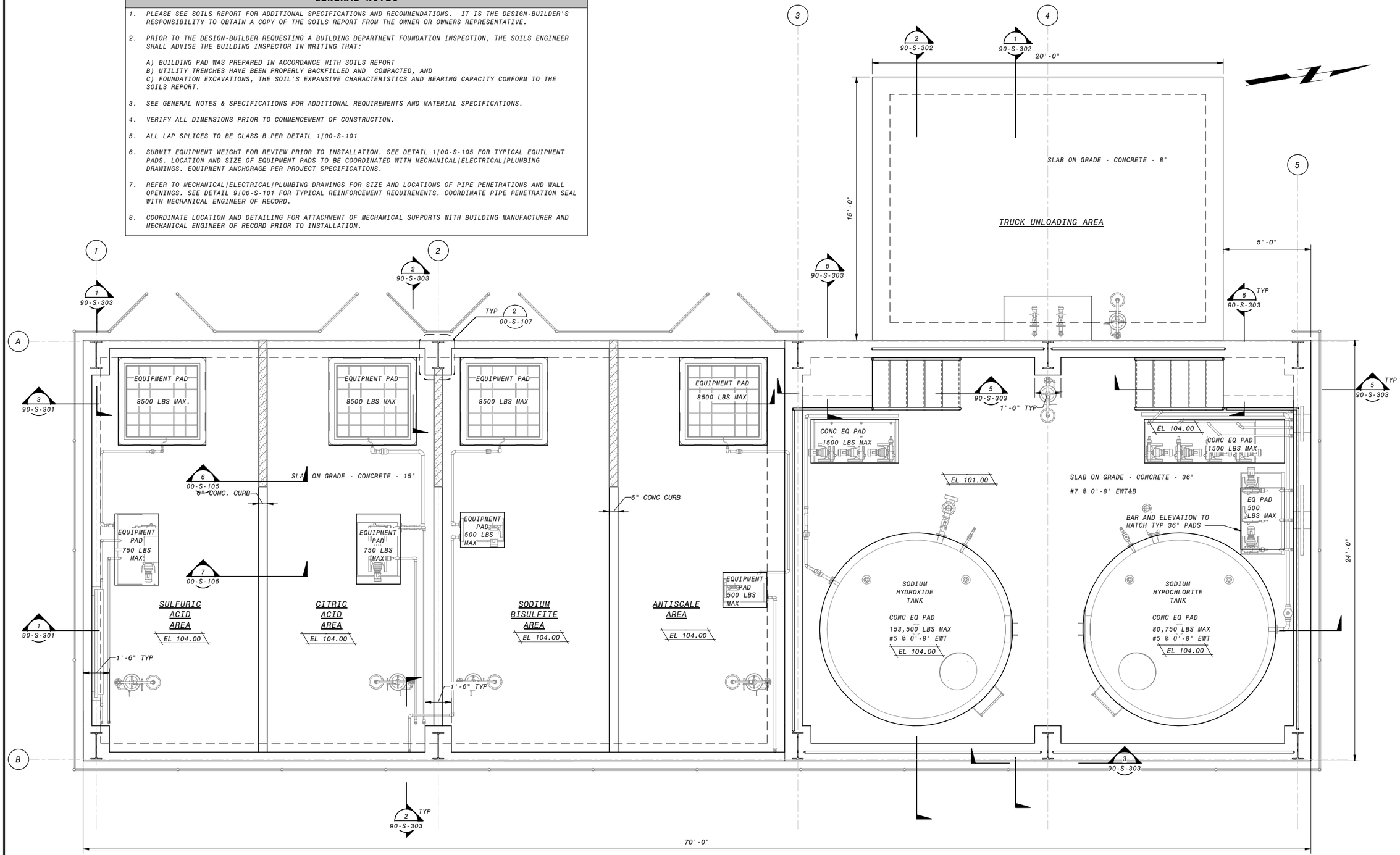


OPERATING LEVEL FLOOR PLAN

3/8" = 1'-0"

12" 0' 1' 2' 3' 4' 5' 6' 7'

3/8" = 1'-0"

COASTAL DEVELOPMENT PERMIT PLANS

| NO. | BY | CHK | APP | REVISIONS AND RECORD OF USE | DATE |
|---|---|---|---|---|---|

Ashley & Vance ENGINEERING, INC

JOINT VENTURE

FILANC

BLACK & VEATCH

CITY OF MORRO BAY
FILANC BLACK & VEATCH DB PROPOSAL
MORRO BAY WRF

CHEMICAL FACILITY
STRUCTURAL
PLAN

DESIGNED: I. SHOEBRIDGE
DETAILED: S. BENJAMIN
CHECKED: Checker
APPROVED: Approver
DATE:

0 1/2 1

IF THIS BAR DOES NOT MEASURE 1" THEN DRAWING IS NOT TO FULL SCALE

PROJECT NO.
400530

90-S-101
SHEET
OF

PLOTTED: 7/29/2019 7:43:48 PM

D400530

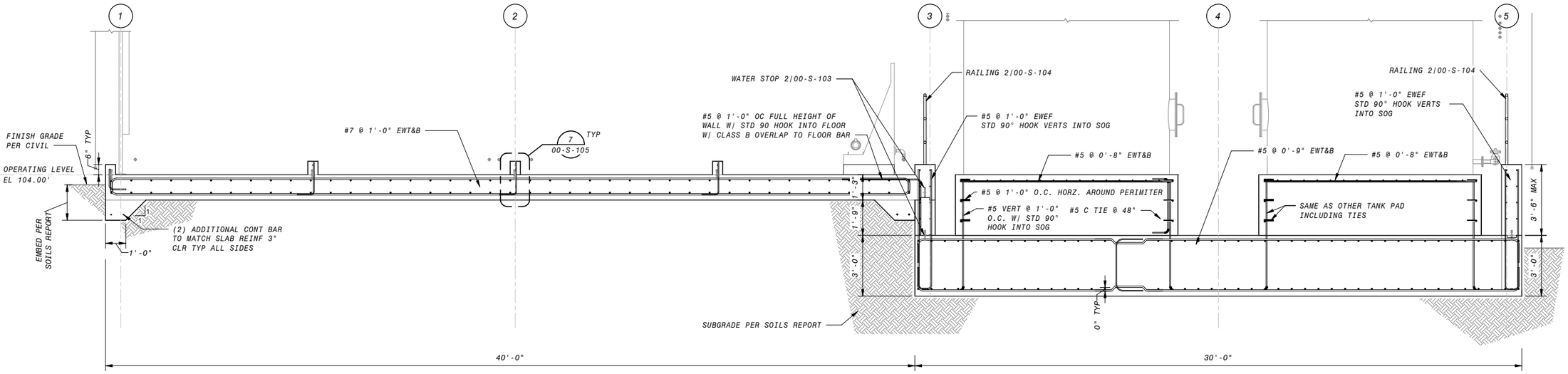


1 SECTION
90-S-101 3/8" = 1'-0"

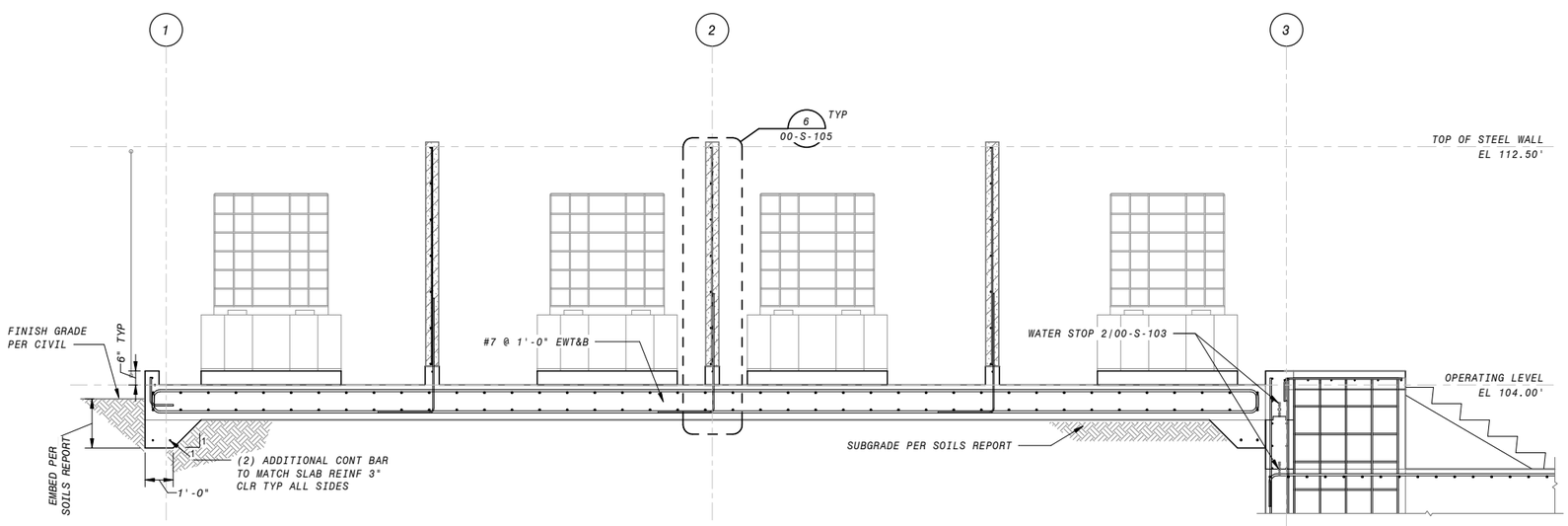


3 SECTION
90-S-101 3/8" = 1'-0"

## GENERAL SECTION NOTES

1. FOR GENERAL STRUCTURAL NOTES, SEE SHEETS 00-S-002 AND STANDARD SPECIFICATIONS.
2. AT WALLS 12" THICK OR LESS, PROVIDE A 6" WATERSTOP, UNO. AT WALLS GREATER THAN 12" THICK, PROVIDE A 9" WATERSTOP, UNO. REFER TO DETAIL 2 ON SHEET 00-S-103.
3. REINFORCEMENT CLEAR COVER TO BE 2" EF FOR WALLS, 2" AT TOP OF SLABS, AND 3" AT BOTTOM OF SLABS, TYP., UNO
4. CONTRACTOR IS TO PROVIDE COMPLETE DESIGN PACKAGE FOR FRP COVER/GRATING (AND ACCESS HATCH, WHERE OCCURS) SIGNED BY A REGISTERED PROFESSIONAL ENGINEER TO THE EOR FOR REVIEW AND APPROVAL. MINIMUM DESIGN CRITERIA MUST INCLUDE: 60psf UNIFORM DISTRIBUTED LIVE LOAD, 300lb CONCENTRATED LIVE LOAD, AND LESSER OF L/120 OR 3/8" DEFLECTION. SEE DETAIL 3/00-S-101 FOR ADDITIONAL INFORMATION AT GRATING SUPPORT.
5. RETAINING WALLS ARE DESIGNED ASSUMING SUFFICIENT SUB-SURFACE DRAINAGE WILL BE PROVIDED BEHIND WALLS. CONTRACTOR TO PROVIDE WATERPROOF BARRIER BETWEEN SOIL AND CONCRETE RETAINING WALL. SEE PROJECT SOILS REPORT FOR SPECIFIC REQUIREMENTS.
6. ALL LAP SPLICES TO BE CLASS B PER DETAIL 1/S-00-101.
7. REFER TO MECHANICAL DRAWINGS FOR SIZE AND LOCATIONS OF PIPE PENETRATIONS AND WALL OPENINGS. SEE DETAIL 9/00-S-101 FOR TYPICAL REINFORCEMENT REQUIREMENTS. COORDINATE PIPE PENETRATION SEAL WITH EOR (WHERE OCCURS).
8. PROVIDE WEIR PLATE PER MECHANICAL DRAWINGS. COORDINATE OPENING SIZE WITH EOR.
9. PROVIDE GATE PER MECHANICAL DRAWINGS. COORDINATE OPENING SIZE WITH EOR.
10. COORDINATE EQUIPMENT WEIGHT WITH EOR PRIOR TO INSTALLATION. SEE DETAIL 1/00-S-105 FOR TYPICAL EQUIPMENT ANCHORAGE AND EQUIPMENT PADS.

12" 0' 1' 2' 3' 4' 5' 6' 7'
3/8" = 1'-0"

# COASTAL DEVELOPMENT PERMIT PLANS

| NO. | BY | CHK | APP | REVISIONS AND RECORD OF USE | DATE |
|---|---|---|---|---|---|

Ashley & Vance ENGINEERING, INC
JOINT VENTURE
FILANC
BLACK & VEATCH

CITY OF MORRO BAY
FILANC BLACK & VEATCH DB PROPOSAL
MORRO BAY WRF

CHEMICAL FACILITY
STRUCTURAL
SECTIONS & DETAILS 1

DESIGNED: I. SHOEBRIDGE
DETAILED: S. BENJAMIN
CHECKED: Checker
APPROVED: Approver
DATE:

0 1/2 1
IF THIS BAR DOES NOT MEASURE 1" THEN DRAWING IS NOT TO FULL SCALE

PROJECT NO.
400530

90-S-301
SHEET
OF

PLOTTED: 7/29/2019 7:43:49 PM
D400530

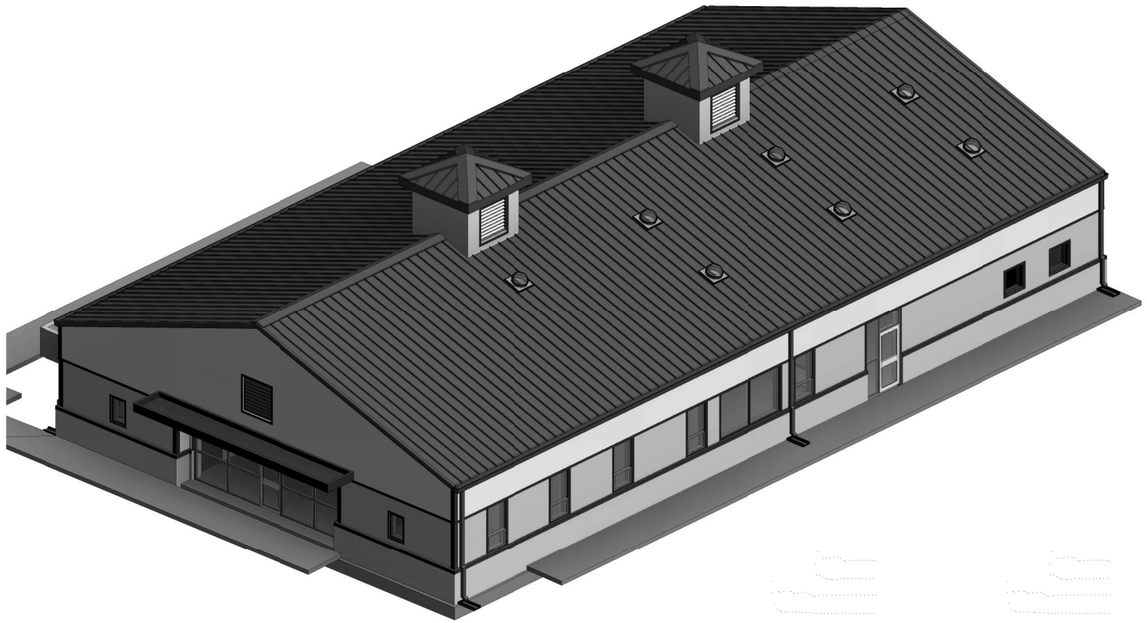

3D VIEW - EAST

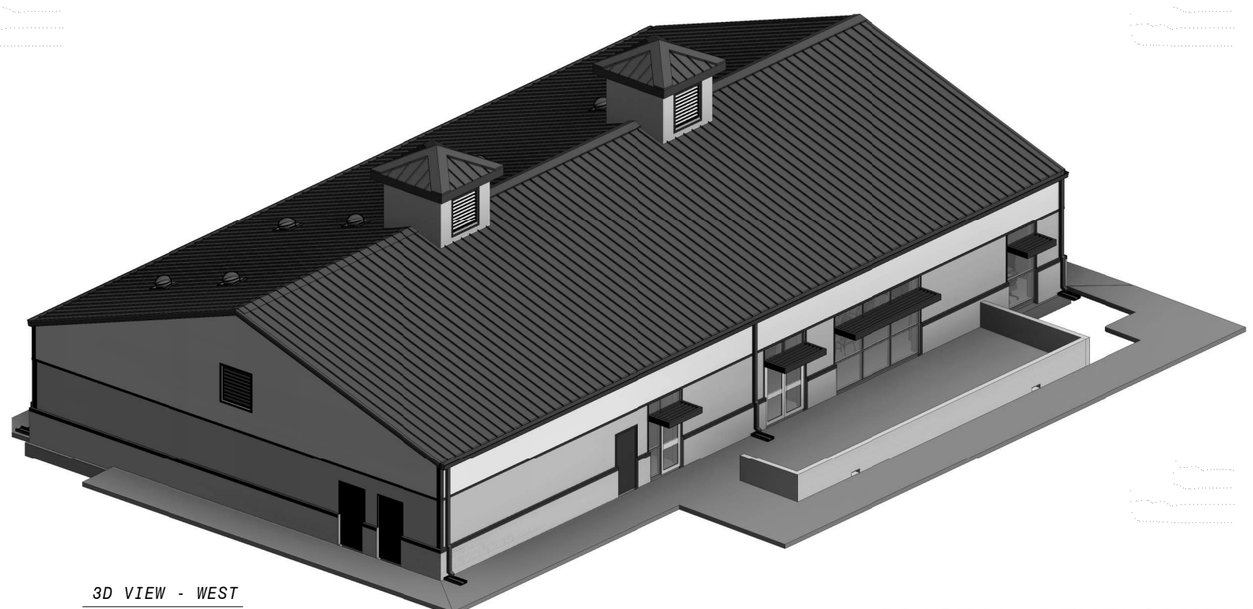

3D VIEW - WEST

# COASTAL DEVELOPMENT PERMIT PLANS

| DATE | REVISIONS AND RECORD OF USE | NO. | BY | CHK | APP |
|---|---|---|---|---|---|

Ashley & Vance ENGINEERING, INC

JOINT VENTURE

FILANC

BLACK & VEATCH

CITY OF MORRO BAY
FILANC BLACK & VEATCH DB PROPOSAL
WATER RECLAMATION FACILITY (WRF)

OPS BUILDING
STRUCTURAL
3D VIEWS

DESIGNED: I. SHOEBRIDGE
DETAILED: S. BENJAMIN
CHECKED: Checker
APPROVED: Approver
DATE: XX/XX/XXXX

0 1/2 1

IF THIS BAR DOES NOT MEASURE 1" THEN DRAWING IS NOT TO FULL SCALE

PROJECT NO.
400530

95-S-001

SHEET
OF XXX

PLOTTED: 7/29/2019 7:13:38 PM

D400530

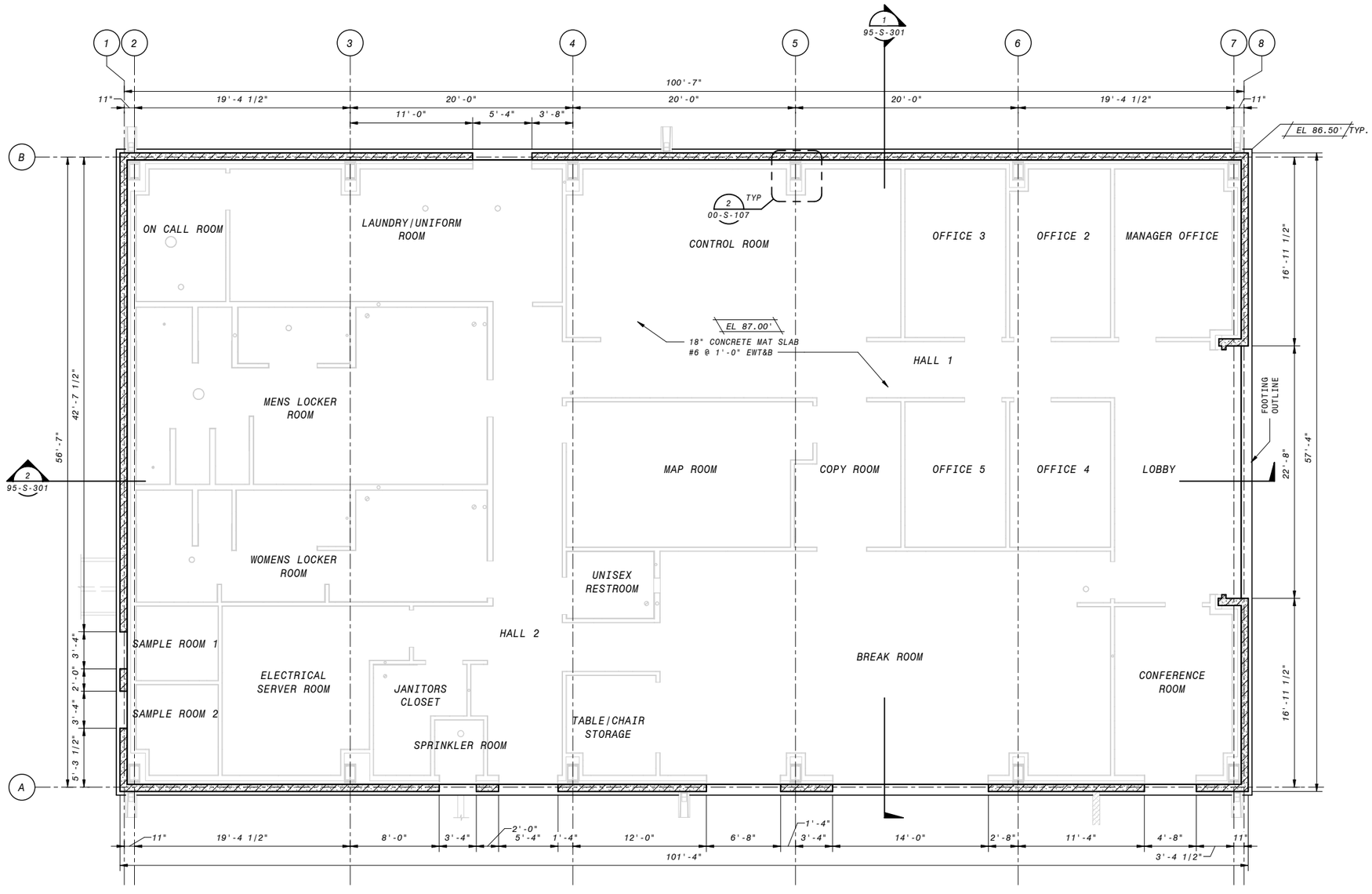


OPERATING FLOOR PLAN

3/16" = 1'-0"

## GENERAL NOTES

1. PLEASE SEE SOILS REPORT FOR ADDITIONAL SPECIFICATIONS AND RECOMMENDATIONS. IT IS THE DESIGN-BUILDER'S RESPONSIBILITY TO OBTAIN A COPY OF THE SOILS REPORT FROM THE OWNER OR OWNERS REPRESENTATIVE.
2. PRIOR TO THE DESIGN-BUILDER REQUESTING A BUILDING DEPARTMENT FOUNDATION INSPECTION, THE SOILS ENGINEER SHALL ADVISE THE BUILDING INSPECTOR IN WRITING THAT:

   A) BUILDING PAD WAS PREPARED IN ACCORDANCE WITH SOILS REPORT

   B) UTILITY TRENCHES HAVE BEEN PROPERLY BACKFILLED AND COMPACTED, AND

   C) FOUNDATION EXCAVATIONS, THE SOIL'S EXPANSIVE CHARACTERISTICS AND BEARING CAPACITY CONFORM TO THE SOILS REPORT.
3. SEE GENERAL NOTES & SPECIFICATIONS FOR ADDITIONAL REQUIREMENTS AND MATERIAL SPECIFICATIONS.
4. VERIFY ALL DIMENSIONS PRIOR TO COMMENCEMENT OF CONSTRUCTION.
5. ALL LAP SPLICES TO BE CLASS B PER DETAIL 1/00-S-101
6. REFER TO MECHANICAL/ELECTRICAL/PLUMBING DRAWINGS FOR SIZE AND LOCATIONS OF PIPE PENETRATIONS AND WALL OPENINGS. SEE DETAIL 9/00-S-101 FOR TYPICAL REINFORCEMENT REQUIREMENTS. COORDINATE PIPE PENETRATION SEAL WITH MECHANICAL ENGINEER OF RECORD.
7. COORDINATE LOCATION AND DETAILING FOR ATTACHMENT OF MECHANICAL SUPPORTS WITH BUILDING MANUFACTURER AND MECHANICAL ENGINEER OF RECORD PRIOR TO INSTALLATION.

6" 4' 2' 0' 5' 10'

3/16" = 1'-0"

# COASTAL DEVELOPMENT PERMIT PLANS

| NO. | BY | CHK | APP | REVISIONS AND RECORD OF USE | DATE |
|---|---|---|---|---|---|

Ashley & Vance ENGINEERING, INC

JOINT VENTURE

FILANC

BLACK & VEATCH

CITY OF MORRO BAY
FILANC BLACK & VEATCH DB PROPOSAL
WATER RECLAMATION FACILITY (WRF)

OPS BUILDING
STRUCTURAL
FLOOR PLAN

DESIGNED: I. Shoebridge
DETAILED: S. Benjamin
CHECKED: Checker
APPROVED: Approver
DATE: XX/XX/XXXX

0 1/2 1

IF THIS BAR DOES NOT MEASURE 1" THEN DRAWING IS NOT TO FULL SCALE

PROJECT NO.
400530

95-S-101
SHEET
OF XXX

PLOTTED: 7/29/2019 7:13:39 PM

D400530

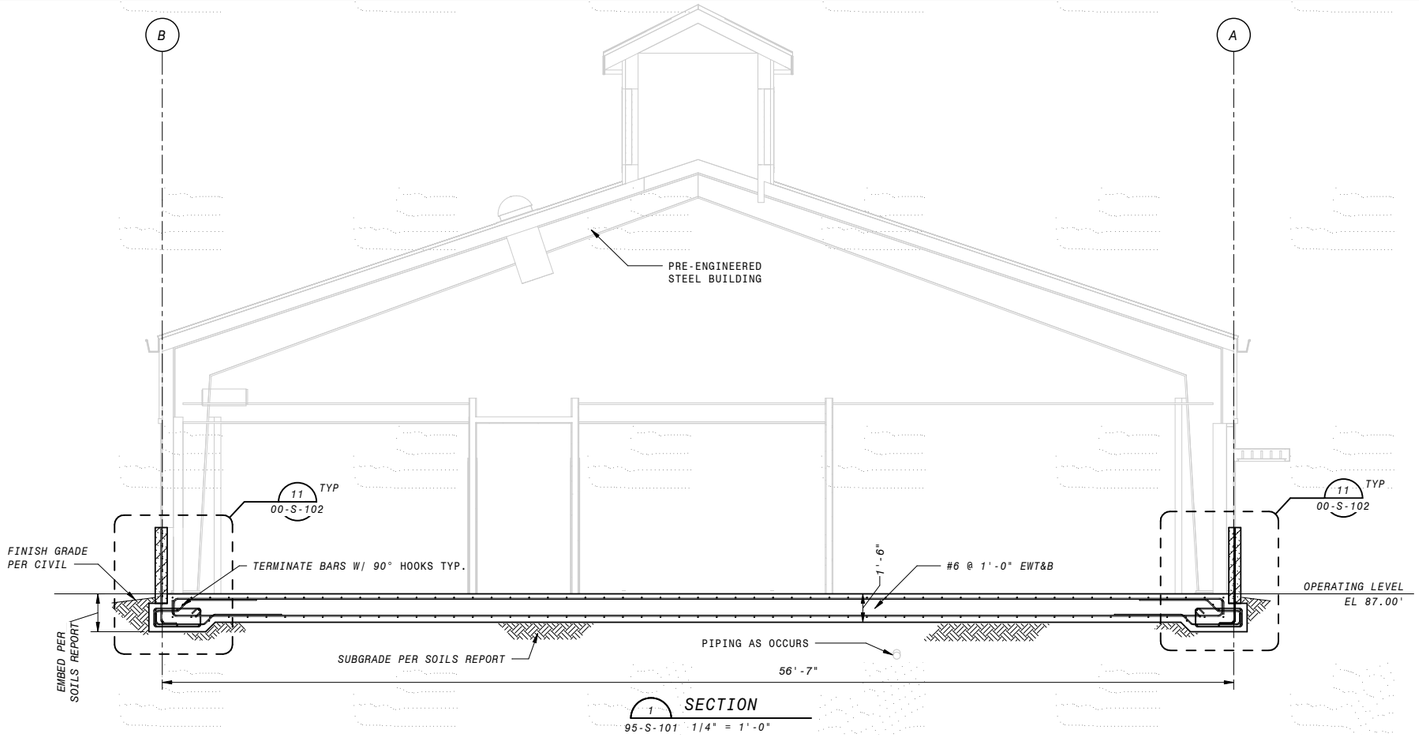


1 SECTION
95-S-101 1/4" = 1'-0"

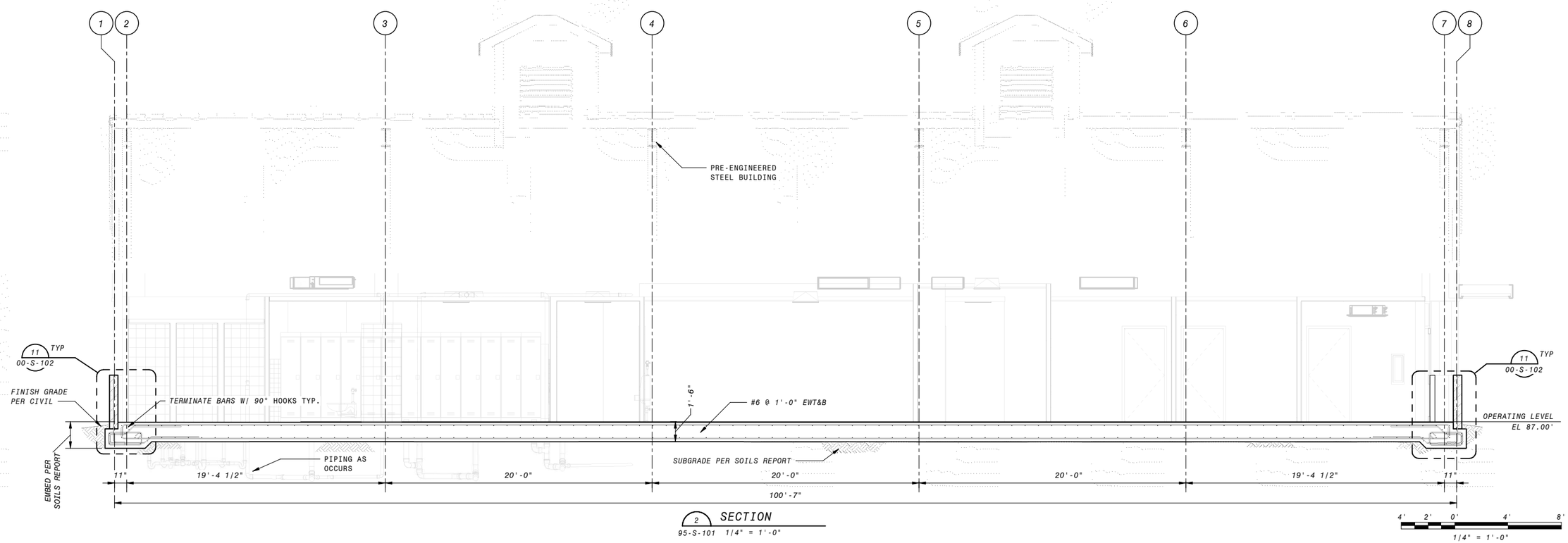


2 SECTION
95-S-101 1/4" = 1'-0"

4' 2' 0' 4' 8'
1/4" = 1'-0"

## GENERAL SECTION NOTES

1. FOR GENERAL STRUCTURAL NOTES, SEE SHEETS 00-S-002 AND STANDARD SPECIFICATIONS.
2. REINFORCEMENT CLEAR COVER TO BE 2" EF FOR WALLS, 2" AT TOP OF SLABS, AND 3" AT BOTTOM OF SLABS, TYP., UNO
3. ALL LAP SPLICES TO BE CLASS B PER DETAIL 1/00-S-101.
4. REFER TO MECHANICAL DRAWINGS FOR SIZE AND LOCATIONS OF PIPE PENETRATIONS AND WALL OPENINGS. SEE DETAIL 9/00-S-101 FOR TYPICAL REINFORCEMENT REQUIREMENTS. COORDINATE PIPE PENETRATION SEAL WITH EOR (WHERE OCCURS).
5. COORDINATE EQUIPMENT WEIGHT WITH EOR PRIOR TO INSTALLATION. SEE DETAIL 1/00-S-105 FOR TYPICAL EQUIPMENT ANCHORAGE AND EQUIPMENT PADS.

| DATE | REVISIONS AND RECORD OF USE | NO. | BY | CHK | APP |
|---|---|---|---|---|---|

Ashley & Vance ENGINEERING, INC

JOINT VENTURE

FILANC

BLACK & VEATCH

CITY OF MORRO BAY
FILANC BLACK & VEATCH DB PROPOSAL
WATER RECLAMATION FACILITY (WRF)

OPS BUILDING
STRUCTURAL
SECTIONS

DESIGNED: I. SHOEBRIDGE
DETAILED: S. BENJAMIN
CHECKED: Checker
APPROVED: Approver
DATE: XX/XX/XXXX

0 1/2 1
IF THIS BAR DOES NOT MEASURE 1" THEN DRAWING IS NOT TO FULL SCALE

PROJECT NO.
400530

95-S-301
SHEET
OF XXX

COASTAL DEVELOPMENT PERMIT PLANS

PLOTTED: 7/29/2019 7:13:42 PM
D400530

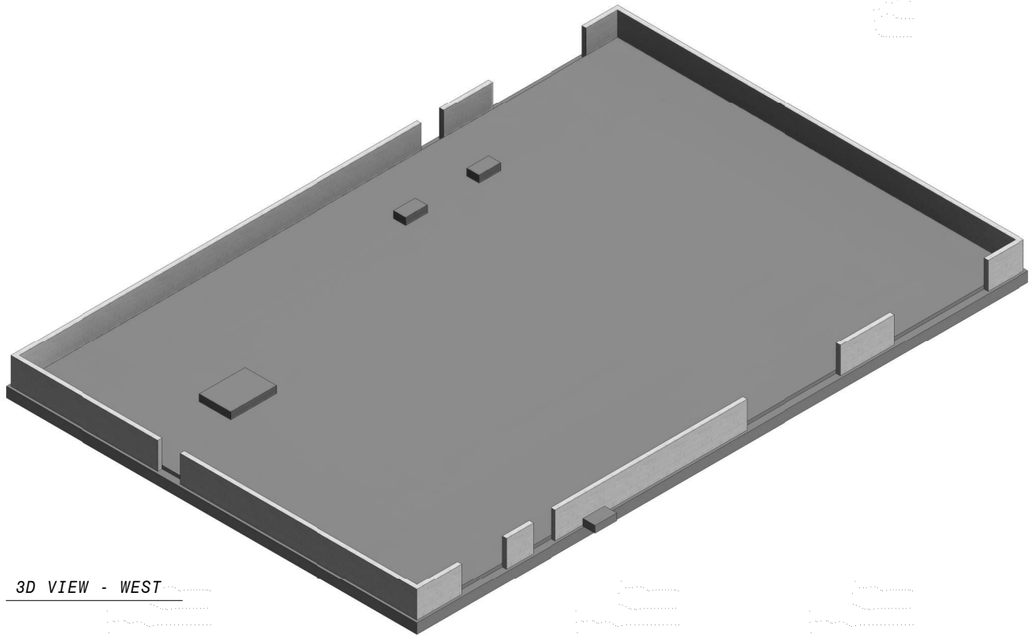

3D VIEW - WEST

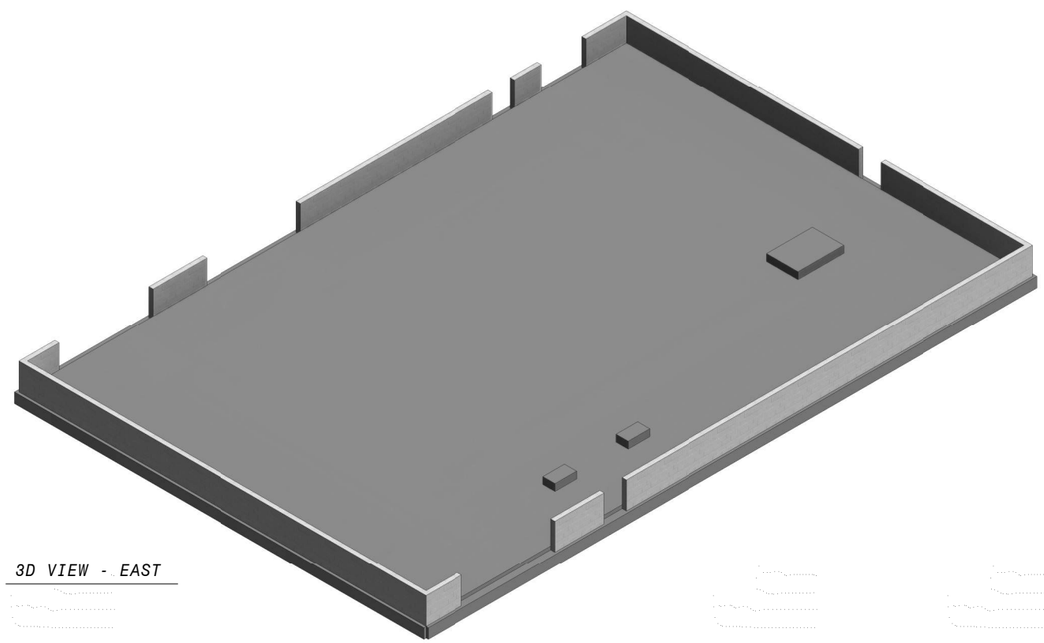

3D VIEW - EAST

COASTAL DEVELOPMENT PERMIT PLANS

| DATE | REVISIONS AND RECORD OF USE | NO. | BY | CHK | APP |
|---|---|---|---|---|---|

Ashley & Vance ENGINEERING, INC

JOINT VENTURE

FILANC

BLACK & VEATCH

CITY OF MORRO BAY
MORRO BAY WRF
WATER RECLAMATION FACILITY (WRF)

MAINTENANCE BUILDING
STRUCTURAL
3D VIEWS

DESIGNED: I. SHOEBRIDGE
DETAILED: S. BENJAMIN
CHECKED: Checker
APPROVED: Approver
DATE: XX/XX/XXXX

0 1/2 1

IF THIS BAR DOES NOT MEASURE 1" THEN DRAWING IS NOT TO FULL SCALE

PROJECT NO.
400530

S-96-001
SHEET
OF XXX

PLOTTED: 7/29/2019 8:04:14 PM
D400530

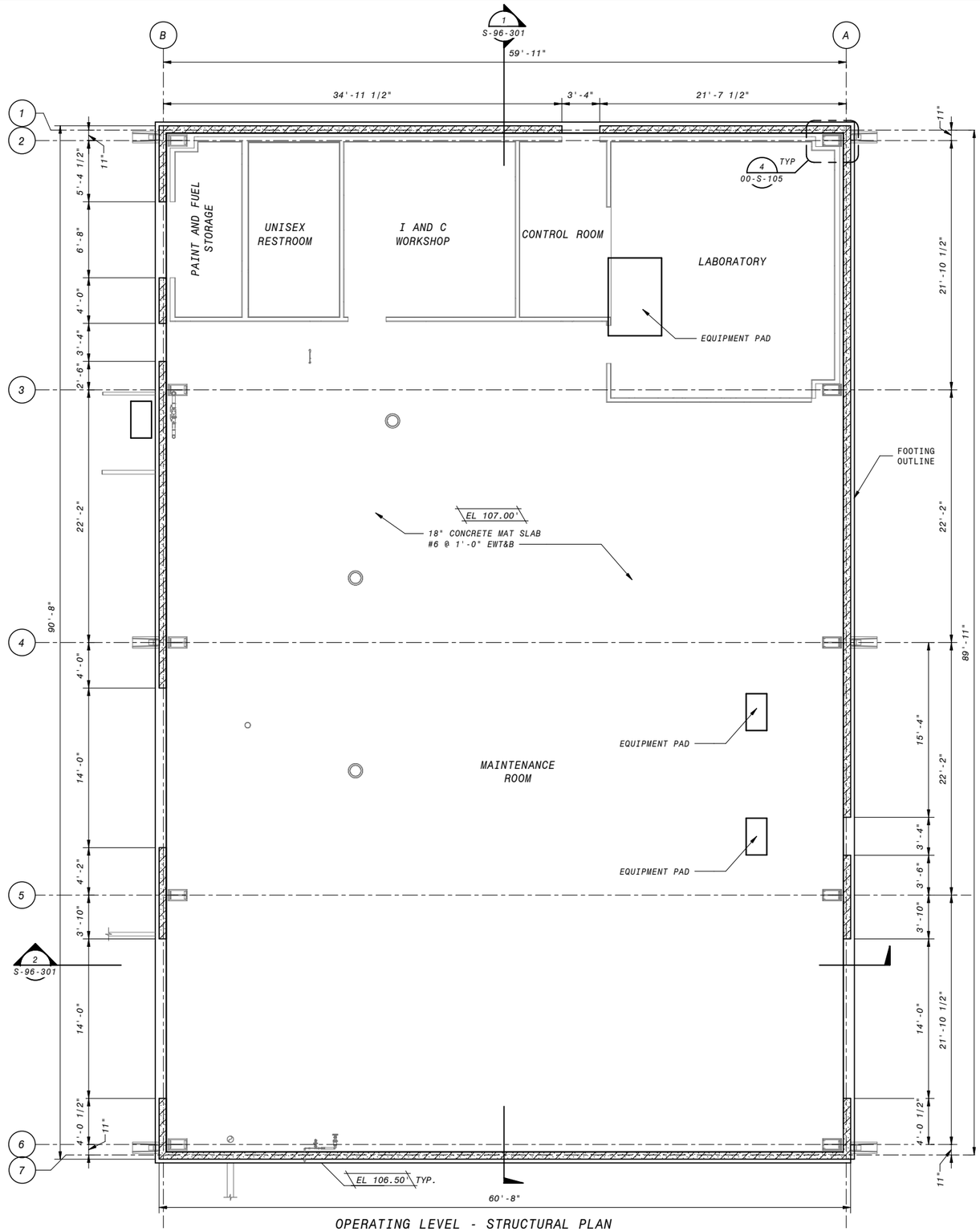


OPERATING LEVEL - STRUCTURAL PLAN

3/16" = 1'-0"

## GENERAL NOTES

1. PLEASE SEE SOILS REPORT FOR ADDITIONAL SPECIFICATIONS AND RECOMMENDATIONS. IT IS THE DESIGN-BUILDER'S RESPONSIBILITY TO OBTAIN A COPY OF THE SOILS REPORT FROM THE OWNER OR OWNERS REPRESENTATIVE.
2. PRIOR TO THE DESIGN-BUILDER REQUESTING A BUILDING DEPARTMENT FOUNDATION INSPECTION, THE SOILS ENGINEER SHALL ADVISE THE BUILDING INSPECTOR IN WRITING THAT:

   A) BUILDING PAD WAS PREPARED IN ACCORDANCE WITH SOILS REPORT

   B) UTILITY TRENCHES HAVE BEEN PROPERLY BACKFILLED AND COMPACTED, AND

   C) FOUNDATION EXCAVATIONS, THE SOIL'S EXPANSIVE CHARACTERISTICS AND BEARING CAPACITY CONFORM TO THE SOILS REPORT.
3. SEE GENERAL NOTES & SPECIFICATIONS FOR ADDITIONAL REQUIRMENTS AND MATERIAL SPECIFICATIONS.
4. VERIFY ALL DIMENSIONS PRIOR TO COMMENCEMENT OF CONSTRUCTION.
5. ALL LAP SPLICES TO BE CLASS B PER DETAIL 1/00-S-101
6. SUBMIT EQUIPMENT WEIGHT FOR REVIEW PRIOR TO INSTALLATION. SEE DETAIL 1/00-S-105 FOR TYPICAL EQUIPMENT PADS. LOCATION AND SIZE OF EQUIPMENT PADS TO BE COORDINATED WITH MECHANICAL/ELECTRICAL/PLUMBING DRAWINGS. EQUIPMENT ANCHORAGE PER PROJECT SPECIFICATIONS.
7. REFER TO MECHANICAL/ELECTRICAL/PLUMBING DRAWINGS FOR SIZE AND LOCATIONS OF PIPE PENETRATIONS AND WALL OPENINGS. SEE DETAIL 9/00-S-101 FOR TYPICAL REINFORCEMENT REQUIREMENTS. COORDINATE PIPE PENETRATION SEAL WITH MECHANICAL ENGINEER OF RECORD.
8. COORDINATE LOCATION AND DETAILING FOR ATTACHMENT OF MECANICAL SUPPORTS WITH BUILDING MANUFACTURER AND MECHANICAL ENGINEER OF RECORD PRIOR TO INSTALLATION.

6" 4' 2' 0' 5' 10'

3/16" = 1'-0"

# COASTAL DEVELOPMENT PERMIT PLANS

| NO. | BY | CHK | APP | REVISIONS AND RECORD OF USE | DATE |
|---|---|---|---|---|---|

Ashley & Vance ENGINEERING, INC

JOINT VENTURE

FILANC

BLACK & VEATCH

CITY OF MORRO BAY
MORRO BAY WRF
WATER RECLAMATION FACILITY (WRF)

MAINTENANCE BUILDING
STRUCTURAL
PLAN

DESIGNED: I. Shoebridge
DETAILED: S. Benjamin
CHECKED: Checker
APPROVED: Approver
DATE: XX/XX/XXXX

0 1/2 1

IF THIS BAR DOES NOT MEASURE 1" THEN DRAWING IS NOT TO FULL SCALE

PROJECT NO.
400530

S-96-101
SHEET
OF XXX

PLOTTED: 7/29/2019 8:04:15 PM

D400530

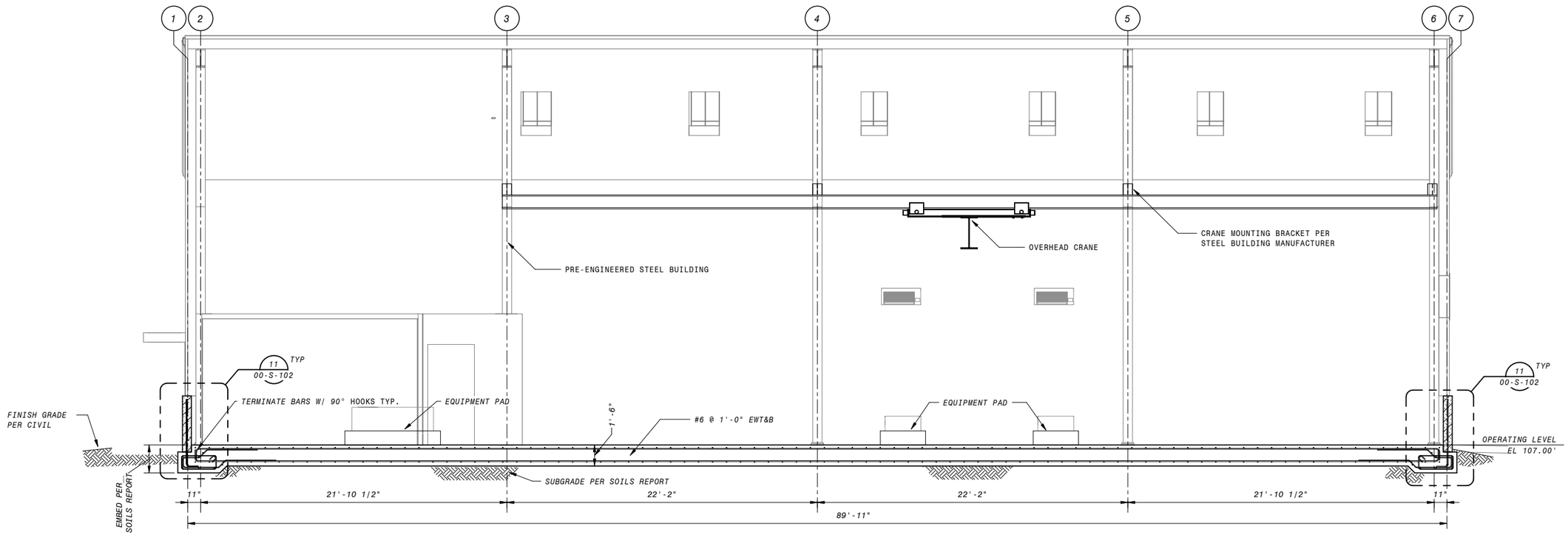


1 SECTION
S-96-101 1/4" = 1'-0"

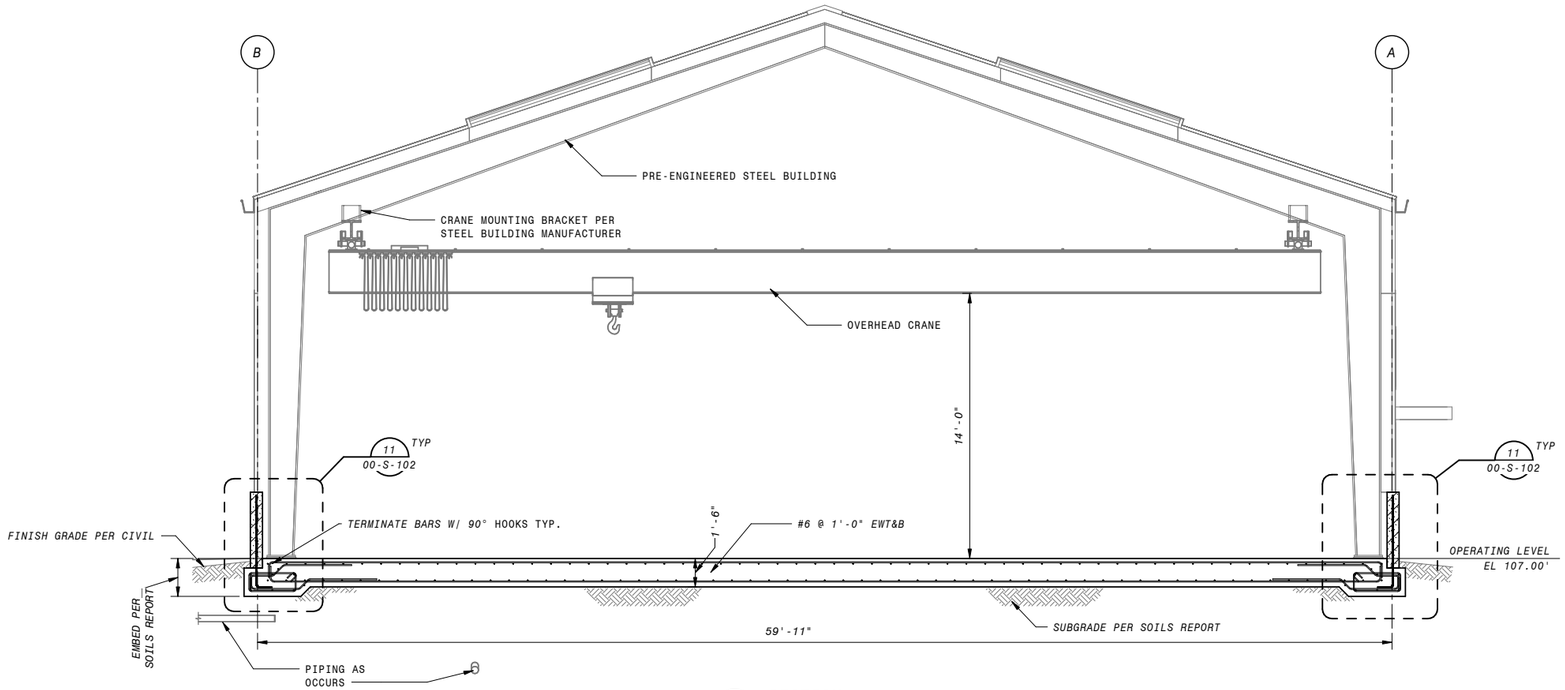


2 SECTION
S-96-101 1/4" = 1'-0"

## GENERAL SECTION NOTES

1. FOR GENERAL STRUCTURAL NOTES, SEE SHEETS 00-S-002 AND STANDARD SPECIFICATIONS.
2. REINFORCEMENT CLEAR COVER TO BE 2" EF FOR WALLS, 2" AT TOP OF SLABS, AND 3" AT BOTTOM OF SLABS, TYP., UNO
3. ALL LAP SPLICES TO BE CLASS B PER DETAIL 1/00-S-101.
4. REFER TO MECHANICAL DRAWINGS FOR SIZE AND LOCATIONS OF PIPE PENETRATIONS AND WALL OPENINGS. SEE DETAIL 9/00-S-101 FOR TYPICAL REINFORCEMENT REQUIREMENTS. COORDINATE PIPE PENETRATION SEAL WITH EOR (WHERE OCCURS).
5. COORDINATE EQUIPMENT WEIGHT WITH EOR PRIOR TO INSTALLATION. SEE DETAIL 1/00-S-105 FOR TYPICAL EQUIPMENT ANCHORAGE AND EQUIPMENT PADS.

4' 2' 0' 4' 8'
1/4" = 1'-0"

COASTAL DEVELOPMENT PERMIT PLANS

| NO. | BY | CHK | APP | DATE | REVISIONS AND RECORD OF USE |
|---|---|---|---|---|---|

Ashley & Vance ENGINEERING, INC
JOINT VENTURE
FILANC
BLACK & VEATCH

CITY OF MORRO BAY
MORRO BAY WRF
WATER RECLAMATION FACILITY (WRF)

MAINTENANCE BUILDING
STRUCTURAL
SECTIONS & DETAILS 1

DESIGNED: I. SHOEBRIDGE
DETAILED: S. BENJAMIN
CHECKED: Checker
APPROVED: Approver
DATE: XX/XX/XXXX

0 1/2 1
IF THIS BAR DOES NOT MEASURE 1" THEN DRAWING IS NOT TO FULL SCALE

PROJECT NO.
400530

S-96-301
SHEET
OF XXX

PLOTTED: 7/29/2019 8:04:15 PM
D400530

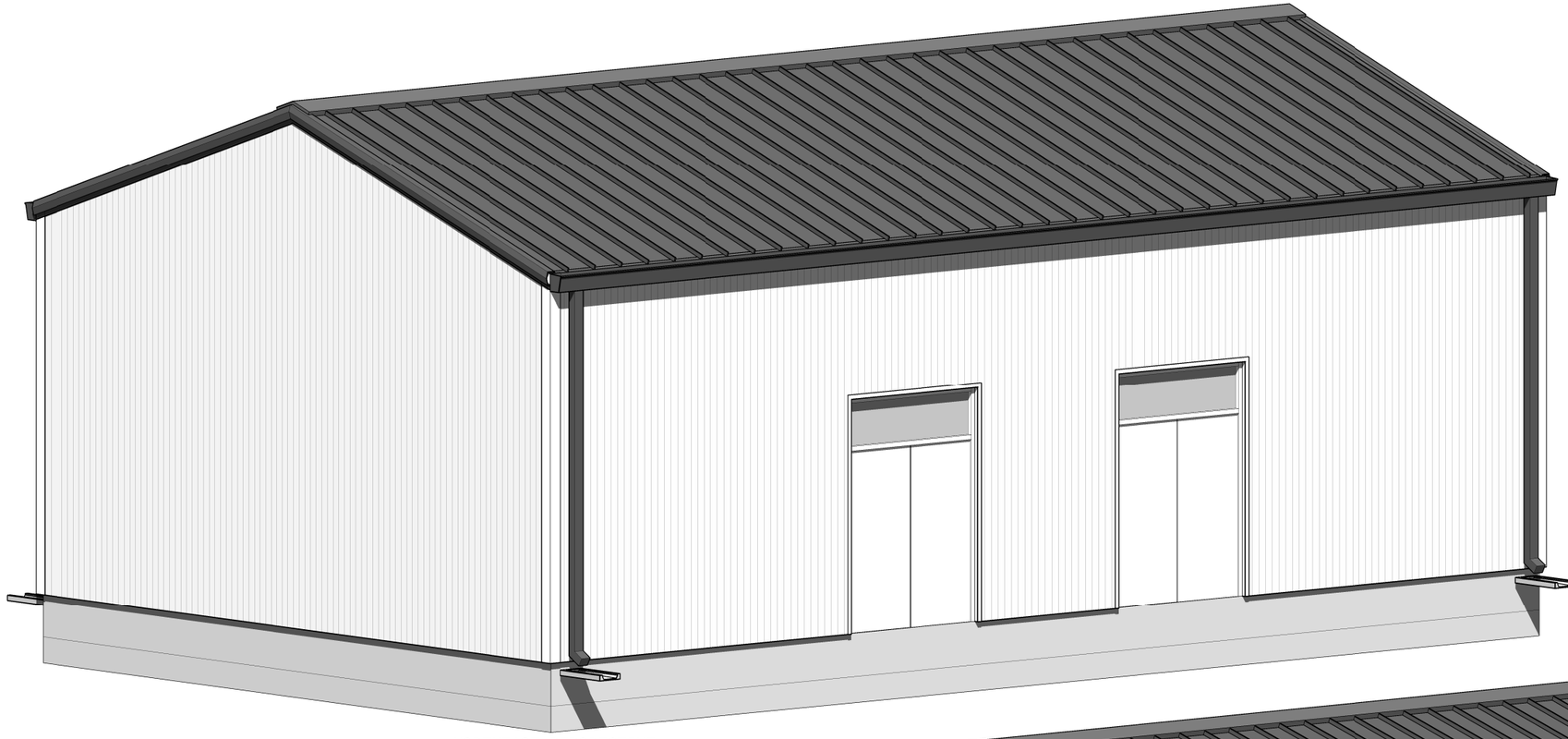

NORTHEAST PERSPECTIVE

NO SCALE

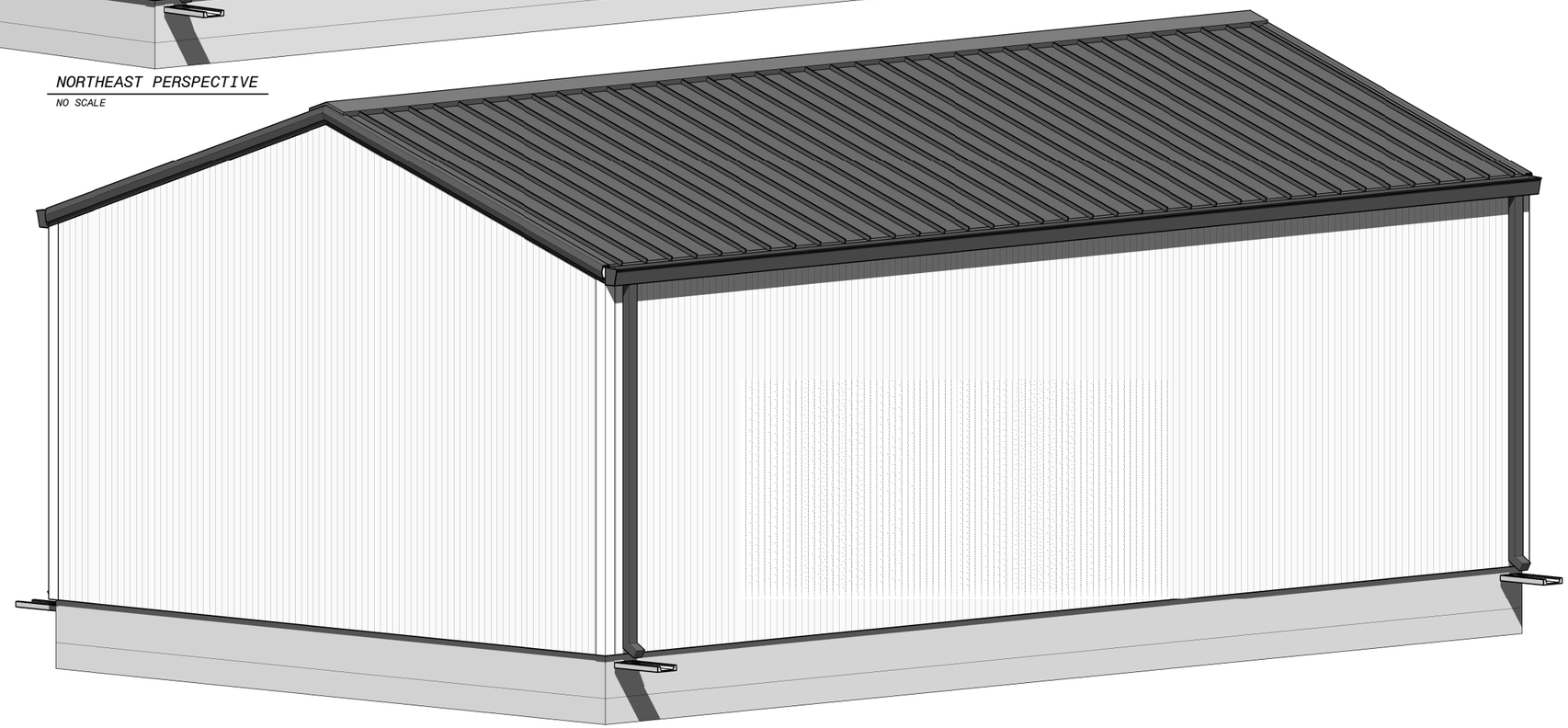

SOUTHWEST PERSPECTIVE

NO SCALE

# COASTAL DEVELOPMENT PERMIT PLANS

| DATE | REVISIONS AND RECORD OF USE | NO. | BY | CHK | APP |
|---|---|---|---|---|---|
| 7/30/2019 | 60% SUBMITTAL | B | BDF | BDF | EVB |
| 3/5/2019 | 30% SUBMITTAL | A | BDF | BDF | EVB |

FRASER SEIPLE ARCHITECTS

JOINT VENTURE

FILANC

BLACK & VEATCH

CITY OF MORRO BAY
MORRO BAY WATER
RECLAMATION FACILITY (WRF)

WATER AND COLLECTION SUPPLIES STORAGE SHED
ARCHITECTURAL
PERSPECTIVES

DESIGNED: EVB
DETAILED: ANH
CHECKED: -
APPROVED: -
DATE:

0 1/2 1

IF THIS BAR DOES NOT MEASURE 1" THEN DRAWING IS NOT TO FULL SCALE

PROJECT NO.
400530

16-A-001

SHEET
OF

PLOTTED: 7/30/2019 12:49:52 PM

D400530

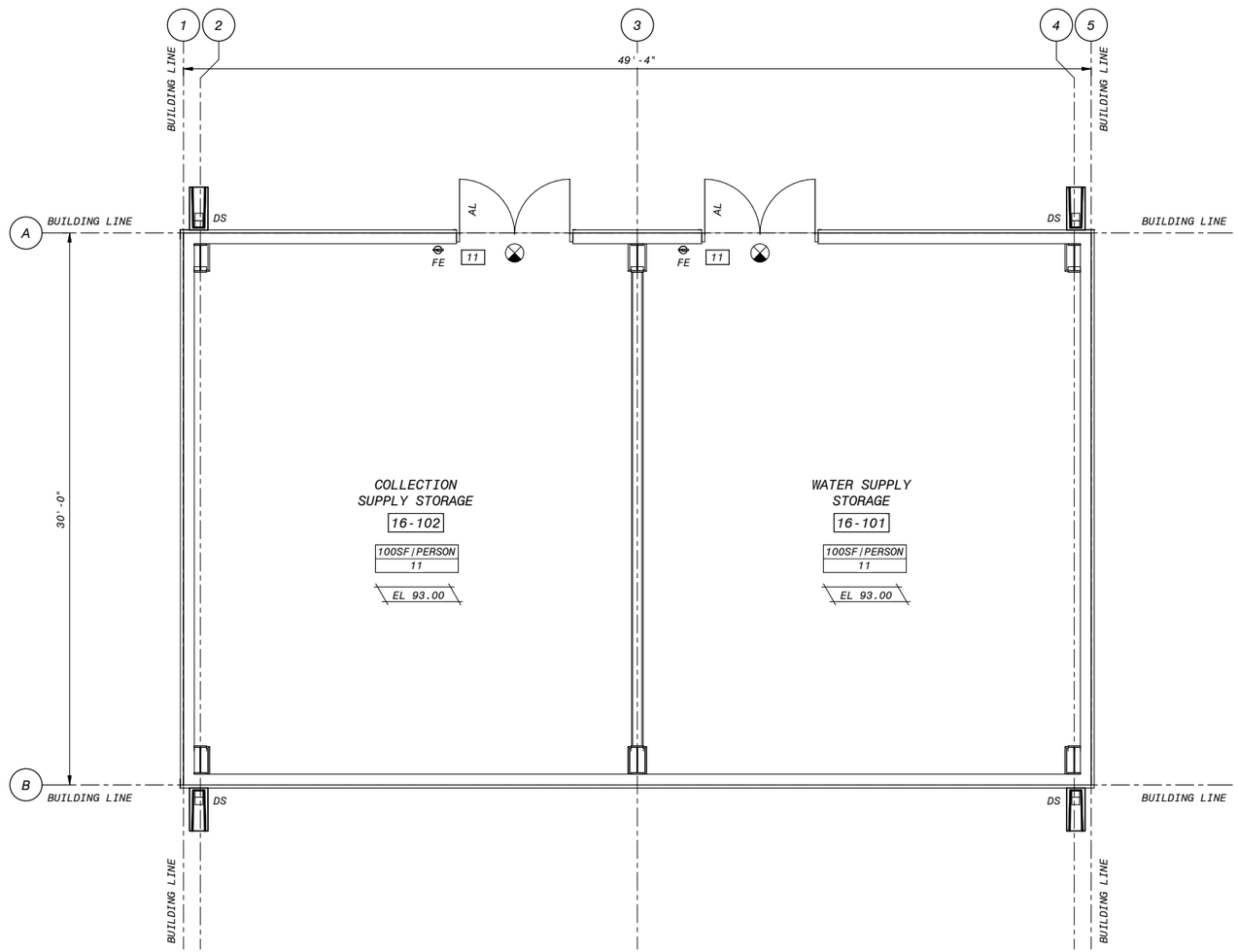


LIFE SAFETY PLAN

1/4" = 1'-0"

## GENERAL SHEET NOTES

## SHEET KEYNOTES

## LIFE SAFETY LEGEND

| | |
|---|---|
| | FIRE EXTINGUISHER (FE) |
| X'-X" | PATH OF EGRESS TRAVEL |
| 100SF/PERSON 10 | OCCUPANTS PER SF OCCUPANT LOAD |
| 5 | CUMULATIVE OCCUPANT LOAD AT EXIT |
| | EXIT SYMBOL |
| AL | ACTIVE LEAF |
| DS | DOWNSPOUT |

## BUILDING CODE ANALYSIS

| STORAGE SUPPLY | |
|---|---|
| APPLICABLE BUILDING CODES: | |
| OCCUPANCY | - |
| ACTUAL FLOOR AREA | 0,000 SF TOTAL |
| ACTUAL HEIGHT | 1 STORY (20.33 FT) |
| TYPE OF CONSTRUCTION | TYPE -- |
| ALLOWABLE HEIGHT | 0,000 SF |
| ALLOWABLE AREA | 2 STORIES (55 FT) |
| DESIGN OCCUPANT LOAD | 0 PERSONS |
| ADA ACCESSIBILITY | - |
| OCCUPANCY SEPARATION | - |
| FIRE SPRINKLERS | - |

4' 2' 0' 4' 8'

1/4" = 1'-0"

| NO. | BY | CHK | APP |
|---|---|---|---|
| B | BDF | BDF | EVB |

| DATE | REVISIONS AND RECORD OF USE |
|---|---|
| 7/30/2019 | 60% SUBMITTAL |

FRASER SEIPLE ARCHITECTS

JOINT VENTURE

FILANC

BLACK & VEATCH

CITY OF MORRO BAY
MORRO BAY WATER
RECLAMATION FACILITY (WRF)

WATER AND COLLECTION SUPPLIES STORAGE SHED
ARCHITECTURAL
LIFE SAFETY PLAN

DESIGNED: EVB
DETAILED: ANH
CHECKED: -
APPROVED: -
DATE:

0 1/2 1

IF THIS BAR DOES NOT MEASURE 1" THEN DRAWING IS NOT TO FULL SCALE

PROJECT NO.
400530

16-A-101
SHEET
OF

COASTAL DEVELOPMENT PERMIT PLANS

PLOTTED: 7/30/2019 12:49:53 PM
D400530

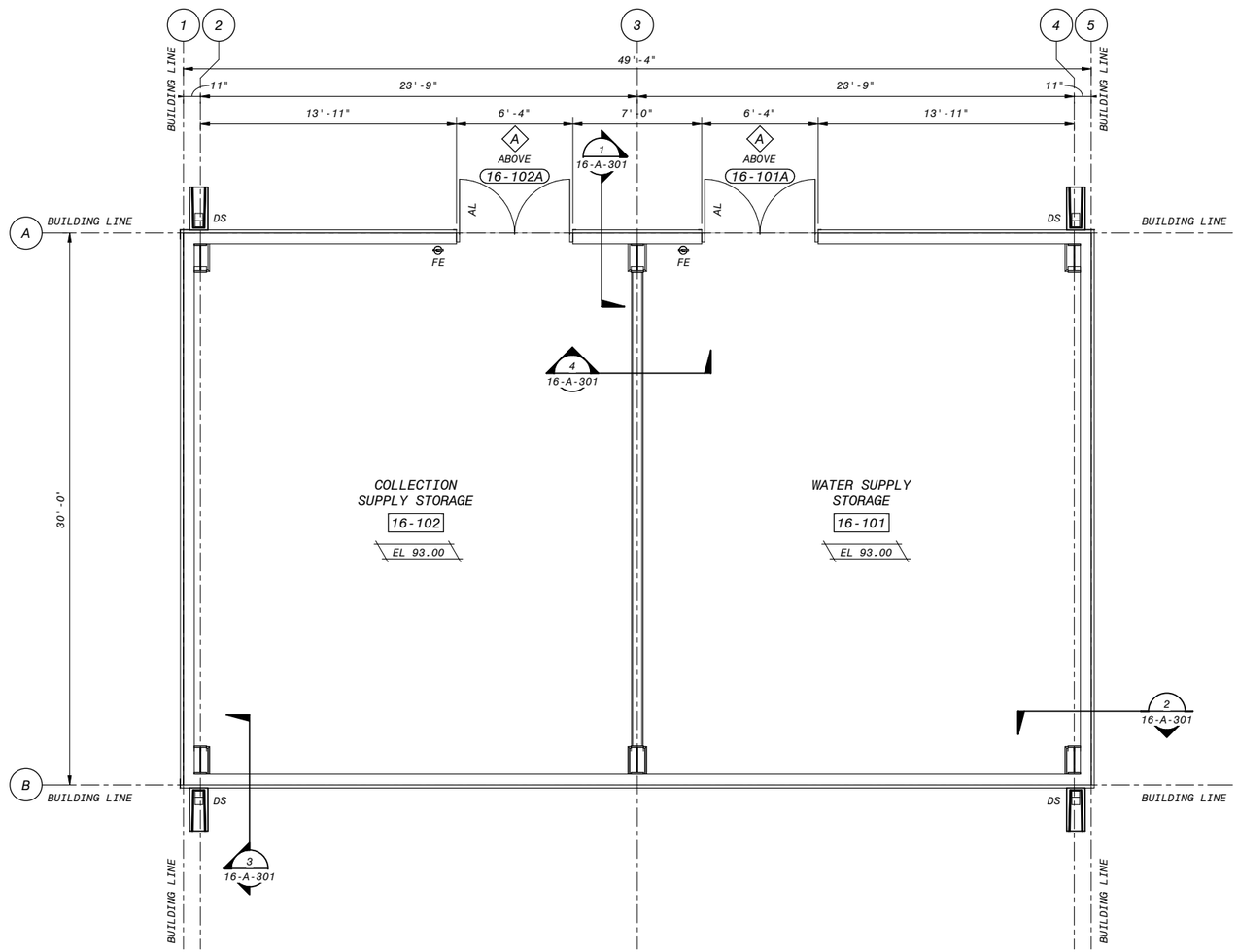


OPERATING FLOOR PLAN

1/4" = 1'-0"

GENERAL SHEET NOTES

SHEET KEYNOTES

4' 2' 0' 4' 8'

1/4" = 1'-0"

COASTAL DEVELOPMENT PERMIT PLANS

| NO. | BY | CHK | APP |
|---|---|---|---|
| B | BDF | BDF | EVB |

60% SUBMITTAL

REVISIONS AND RECORD OF USE

7/30/2019

DATE

FRASER SEIPLE ARCHITECTS

JOINT VENTURE

BLACK & VEATCH

FILANC

CITY OF MORRO BAY
MORRO BAY WATER
RECLAMATION FACILITY (WRF)

WATER AND COLLECTION SUPPLIES STORAGE SHED
ARCHITECTURAL
OPERATING FLOOR PLAN

DESIGNED: EVB
DETAILED: ANH
CHECKED: -
APPROVED: -
DATE:

0 1/2 1

IF THIS BAR DOES NOT MEASURE 1" THEN DRAWING IS NOT TO FULL SCALE

PROJECT NO.
400530

16-A-102

SHEET
OF

PLOTTED: 7/30/2019 12:49:54 PM

D400530

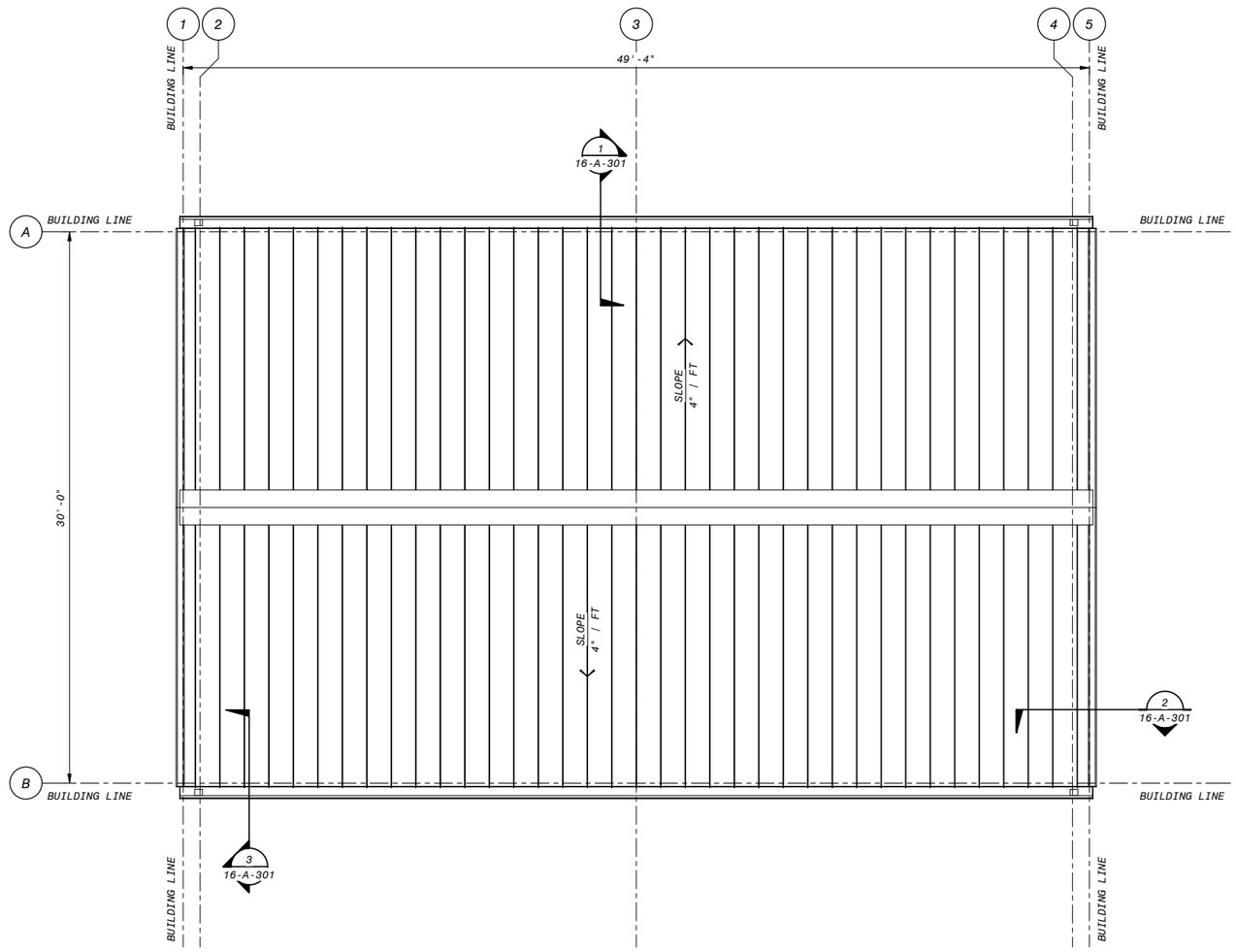


ROOF PLAN

1/4" = 1'-0"

GENERAL SHEET NOTES

SHEET KEYNOTES

4' 2' 0' 4' 8'

1/4" = 1'-0"

COASTAL DEVELOPMENT PERMIT PLANS

| NO. | BY | CHK | APP |
|---|---|---|---|
| B | BDF | BDF | EVB |

| DATE | REVISIONS AND RECORD OF USE |
|---|---|
| 7/30/2019 | 60% SUBMITTAL |

FRASER SEIPLE ARCHITECTS

JOINT VENTURE

FILANC

BLACK & VEATCH

CITY OF MORRO BAY
MORRO BAY WATER
RECLAMATION FACILITY (WRF)

WATER AND COLLECTION SUPPLIES STORAGE SHED
ARCHITECTURAL
ROOF PLAN

DESIGNED: EVB
DETAILED: ANH
CHECKED: -
APPROVED: -
DATE:

0 1/2 1

IF THIS BAR DOES NOT MEASURE 1" THEN DRAWING IS NOT TO FULL SCALE

PROJECT NO.
400530

16-A-103

SHEET
OF

PLOTTED: 7/30/2019 12:49:54 PM

D400530

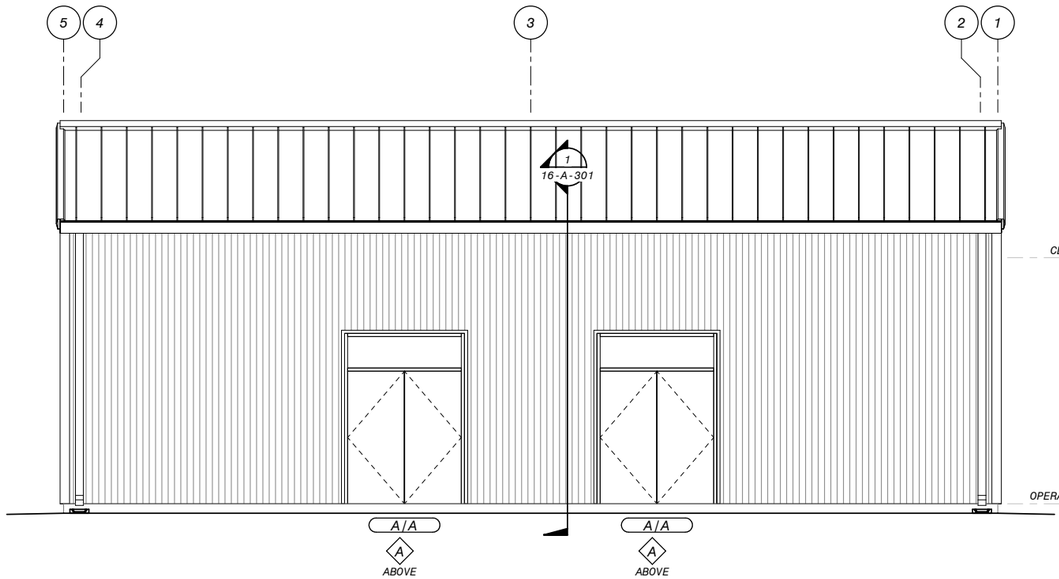


NORTH ELEVATION

1/4" = 1'-0"

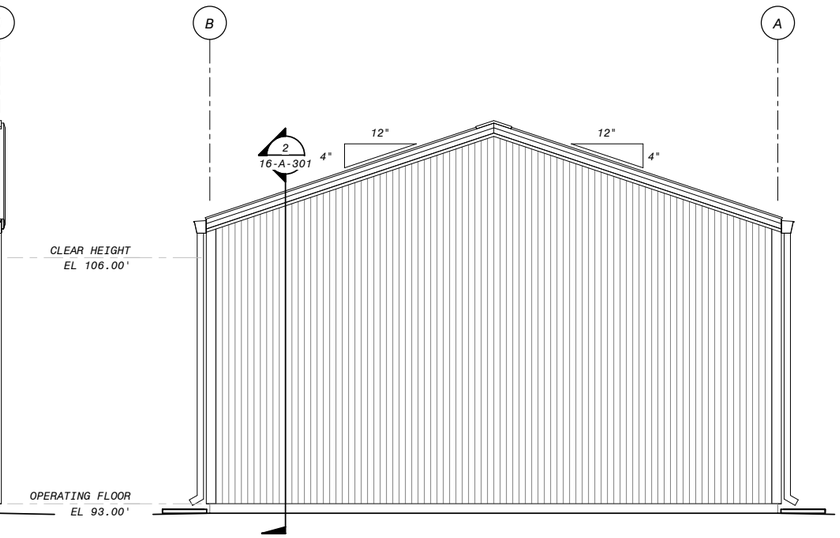


EAST ELEVATION

1/4" = 1'-0"

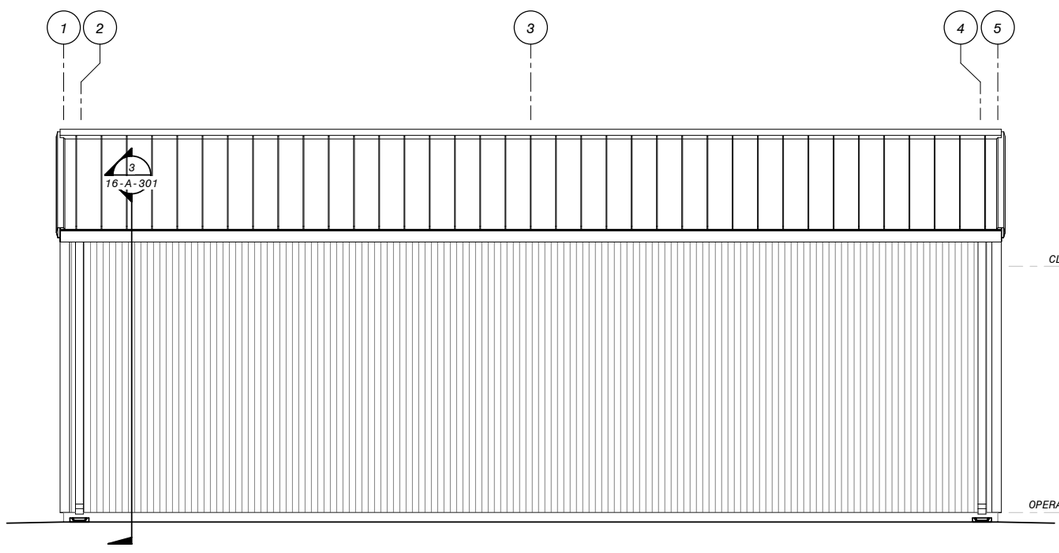


SOUTH ELEVATION

1/4" = 1'-0"

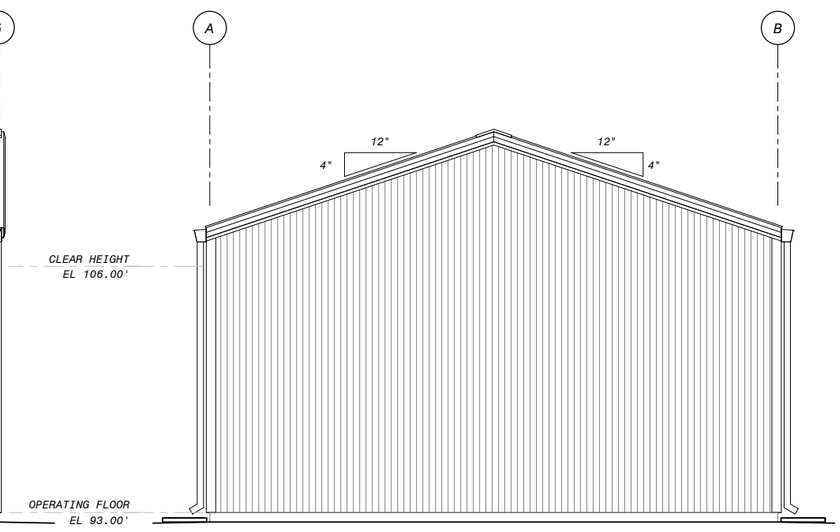


WEST ELEVATION

1/4" = 1'-0"

GENERAL SHEET NOTES

SHEET KEYNOTES

| NO. | BY | CHK | APP |
|---|---|---|---|
| B | BDF | BDF | EVB |

60% SUBMITTAL

REVISIONS AND RECORD OF USE

7/30/2019

DATE

FRASER SEIPLE ARCHITECTS

JOINT VENTURE

FILANC®

BLACK & VEATCH

CITY OF MORRO BAY
MORRO BAY WATER
RECLAMATION FACILITY (WRF)

WATER AND COLLECTION SUPPLIES STORAGE SHED
ARCHITECTURAL
BUILDING ELEVATIONS

DESIGNED: EVB
DETAILED: ANH
CHECKED: -
APPROVED: -
DATE:

0 1/2 1

IF THIS BAR DOES NOT MEASURE 1" THEN DRAWING IS NOT TO FULL SCALE

PROJECT NO.
400530

16-A-201

SHEET
OF

4' 2' 0' 4' 8'

1/4" = 1'-0"

COASTAL DEVELOPMENT PERMIT PLANS

PLOTTED: 7/30/2019 12:49:55 PM

D400530

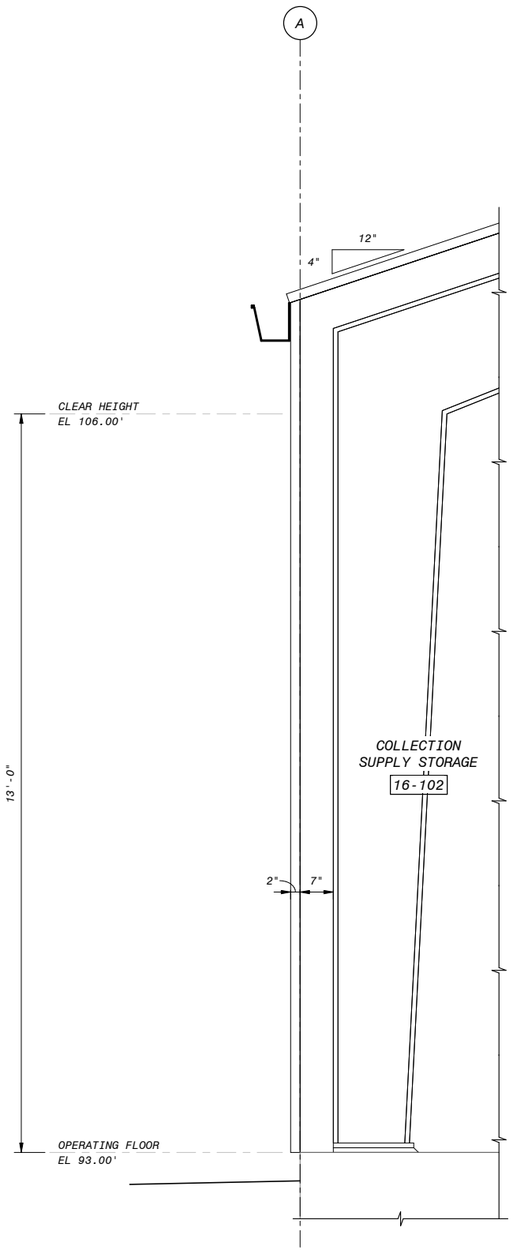


1 SECTION
16-A-102 3/4" = 1'-0"

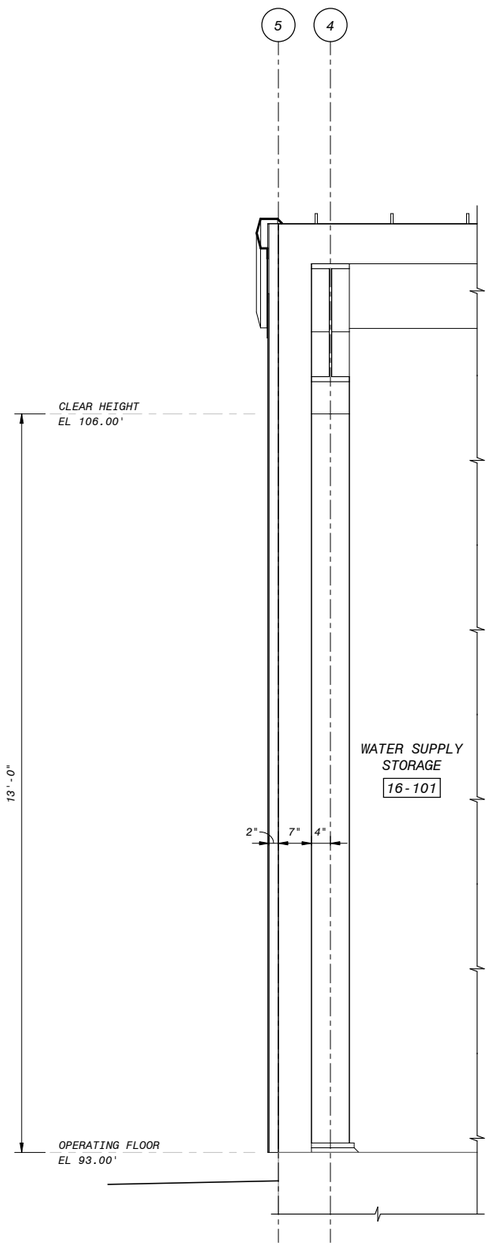


2 SECTION
16-A-102 3/4" = 1'-0"

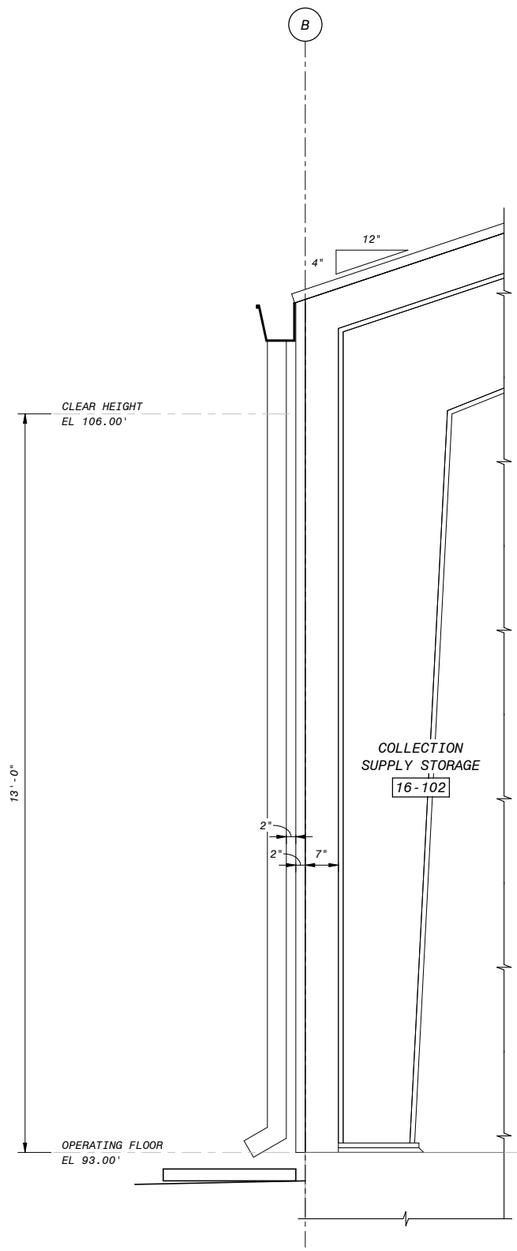


3 SECTION
16-A-102 3/4" = 1'-0"

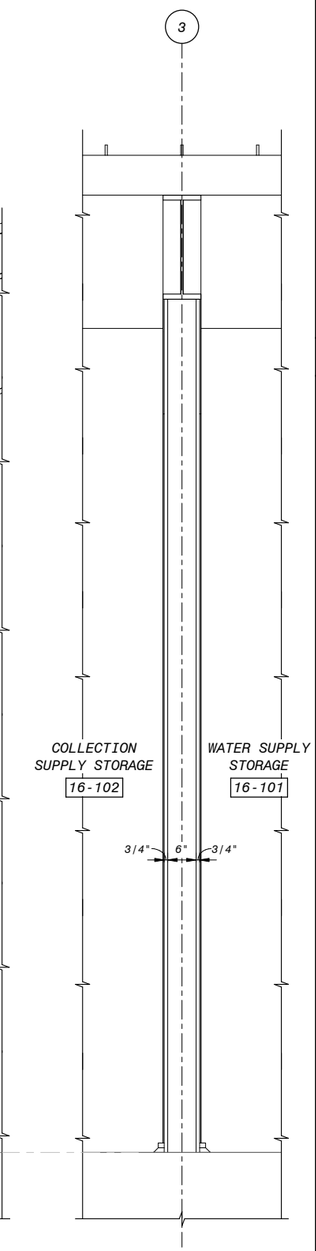


4 SECTION
16-A-102 3/4" = 1'-0"

12" 6" 0' 1' 2' 3'
3/4" = 1'-0"

GENERAL SHEET NOTES

SHEET KEYNOTES

| NO. | BY | CHK | APP |
|---|---|---|---|
| B | | | |

60% SUBMITTAL
REVISIONS AND RECORD OF USE
7/30/2019
DATE

FRASER SEIPLE ARCHITECTS
JOINT VENTURE
FILANC
BLACK & VEATCH

CITY OF MORRO BAY
MORRO BAY WATER
RECLAMATION FACILITY (WRF)

WATER AND COLLECTION SUPPLIES STORAGE SHED
ARCHITECTURAL
WALL SECTIONS

DESIGNED: EVB
DETAILED: ANH
CHECKED: -
APPROVED: -
DATE:

0 1/2 1
IF THIS BAR DOES NOT MEASURE 1" THEN DRAWING IS NOT TO FULL SCALE

PROJECT NO.
400530

16-A-301
SHEET
OF

COASTAL DEVELOPMENT PERMIT PLANS

PLOTTED: 7/30/2019 12:49:55 PM
D400530

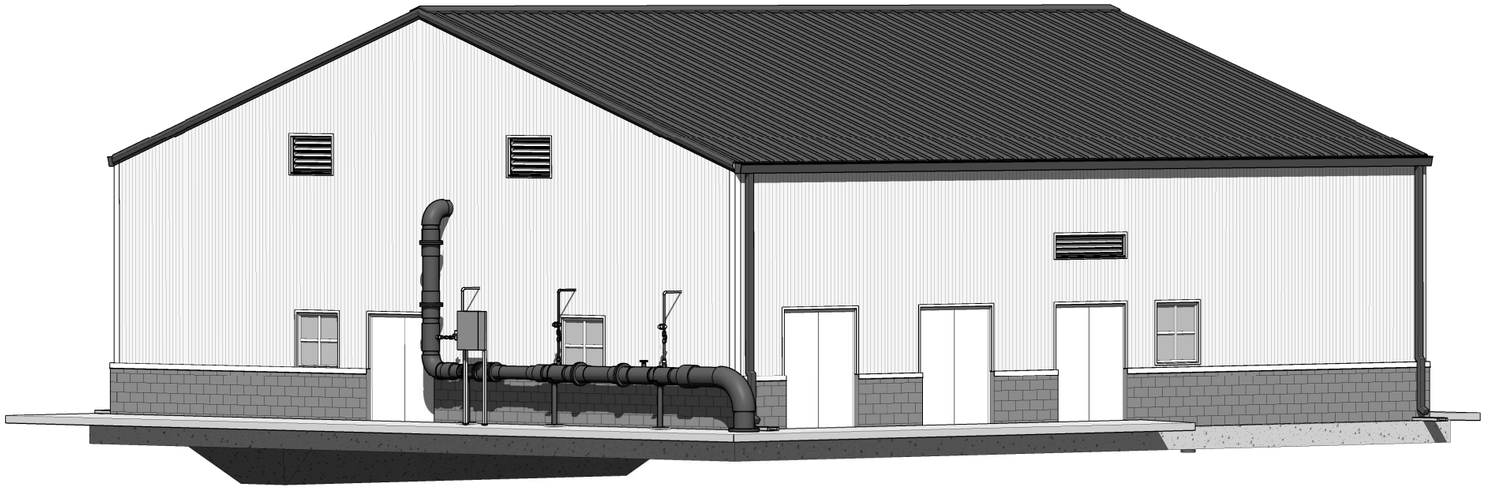

NORTHWEST PERSPECTIVE

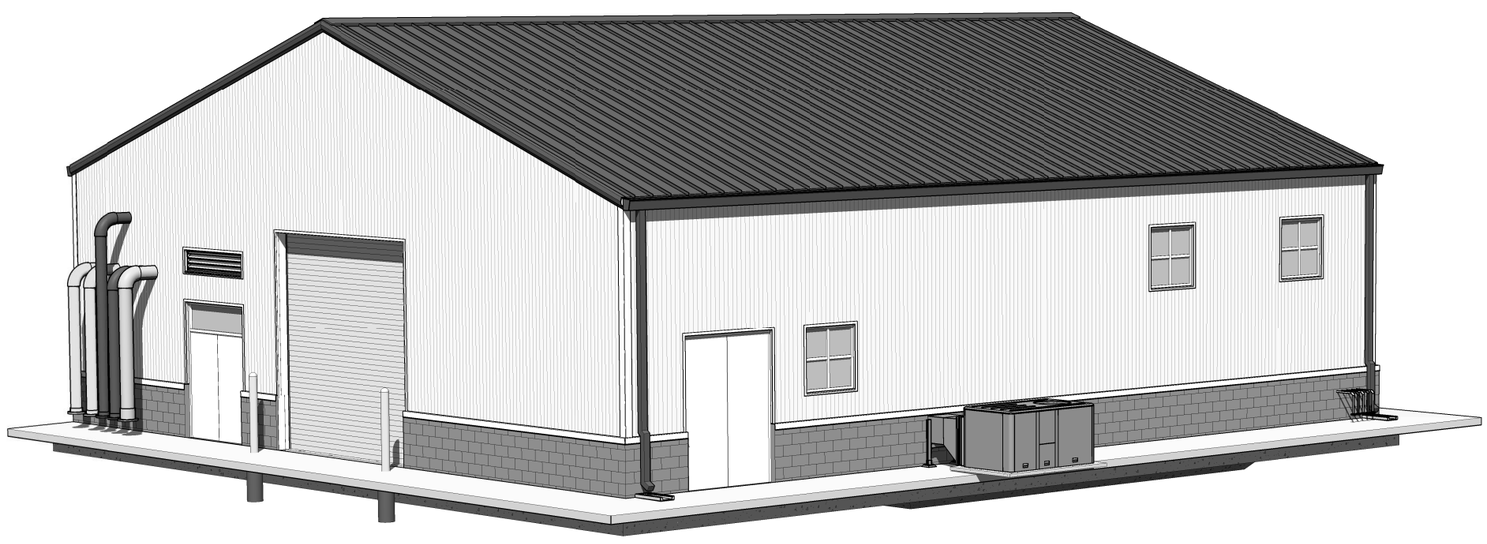

SOUTHEAST PERSPECTIVE

COASTAL DEVELOPMENT PERMIT PLANS

| NO. | DATE | REVISIONS AND RECORD OF USE | BY | CHK | APP |
|---|---|---|---|---|---|
| B | | 60% SUBMITTAL | BDF | BDF | EVB |
| A | 7/30/2019 | 30% SUBMITTAL | BDF | BDF | EVB |
| | 3/5/2019 | | | | |

FRASER SEIPLE ARCHITECTS

JOINT VENTURE

FILANC®

BLACK & VEATCH

CITY OF MORRO BAY
MORRO BAY WATER
RECLAMATION FACILITY (WRF)

RO/UV BUILDING
ARCHITECTURAL
PERSPECTIVES

DESIGNED: BDF
DETAILED: ANH
CHECKED: -
APPROVED: -
DATE:

0 1/2 1

IF THIS BAR DOES NOT MEASURE 1" THEN DRAWING IS NOT TO FULL SCALE

PROJECT NO.
400530

50-A-001
SHEET
OF

PLOTTED: 7/30/2019 11:52:56 AM
D400530

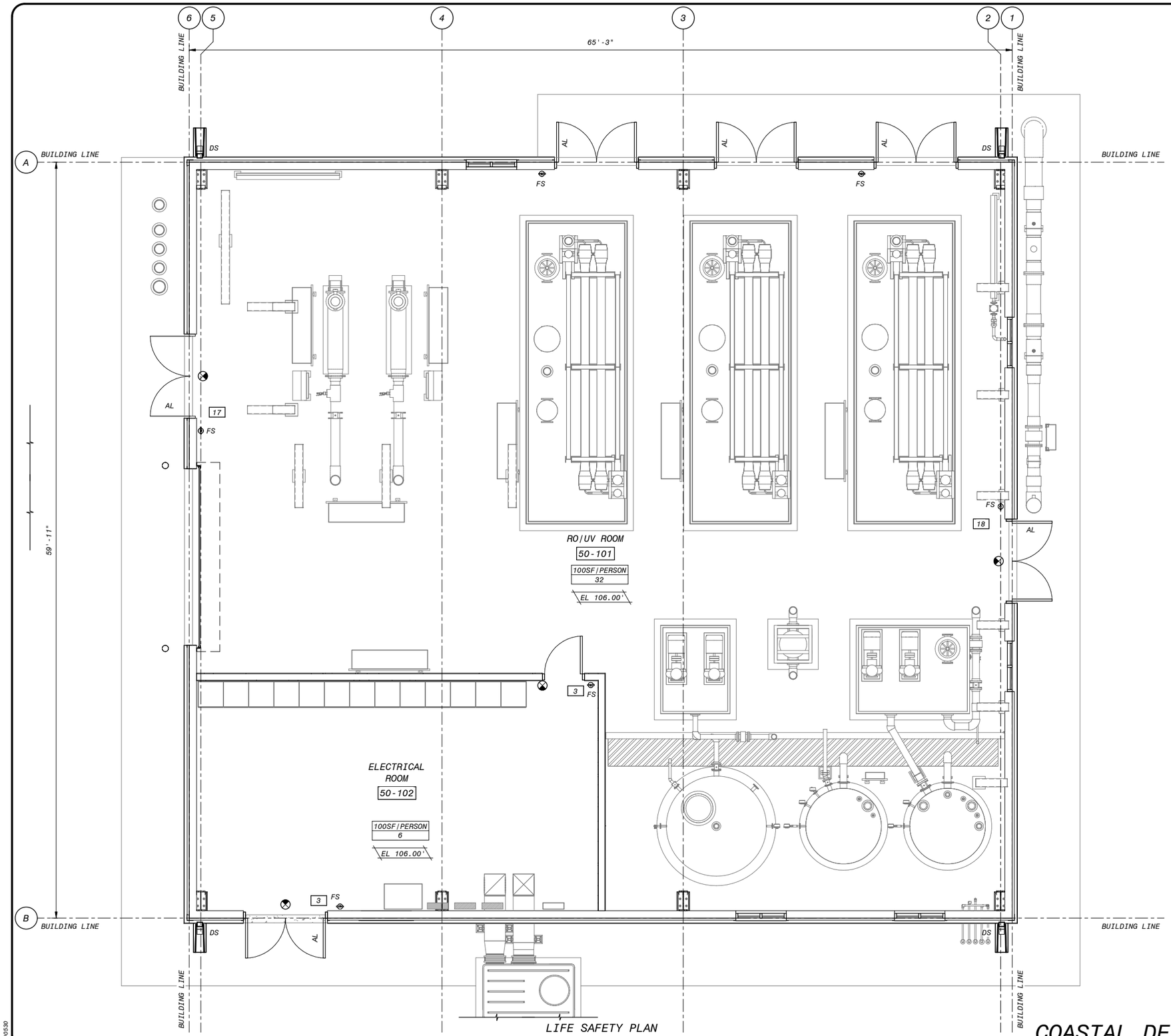


LIFE SAFETY PLAN

1/4" = 1'-0"

## GENERAL SHEET NOTES

## SHEET KEYNOTES

## LIFE SAFETY LEGEND

| | |
|---|---|
| | FIRE EXTINGUISHER (FE) |
| X'-X" | PATH OF EGRESS TRAVEL |
| 100SF/PERSON / 10 | OCCUPANTS PER SF OCCUPANT LOAD |
| 1 | CUMULATIVE OCCUPANT LOAD AT EXIT |
| | EXIT SYMBOL |
| AL | ACTIVE LEAF |
| DS | DOWNSPOUT |

## BUILDING CODE ANALYSIS

| RO/UV BUILDING | |
|---|---|
| APPLICABLE BUILDING CODES: | |
| OCCUPANCY | - |
| ACTUAL FLOOR AREA | 0,000 SF TOTAL |
| ACTUAL HEIGHT | 1 STORY (20.33 FT) |
| TYPE OF CONSTRUCTION | TYPE -- |
| ALLOWABLE HEIGHT | 0,000 SF |
| ALLOWABLE AREA | 2 STORIES (55 FT) |
| DESIGN OCCUPANT LOAD | 0 PERSONS |
| ADA ACCESSIBILITY | - |
| OCCUPANCY SEPARATION | - |
| FIRE SPRINKLERS | - |

4' 2' 0' 4' 8'

1/4" = 1'-0"

# COASTAL DEVELOPMENT PERMIT PLANS

| NO. | BY | CHK | APP |
|---|---|---|---|
| B | BDF | BDF | EVB |

60% SUBMITTAL

REVISIONS AND RECORD OF USE

DATE: 7/30/2019

FRASER SEIPLE ARCHITECTS

JOINT VENTURE

BLACK & VEATCH

FILANC

CITY OF MORRO BAY
MORRO BAY WATER
RECLAMATION FACILITY (WRF)

RO/UV BUILDING
ARCHITECTURAL
LIFE SAFETY PLAN

DESIGNED: BDF
DETAILED: ANH
CHECKED: -
APPROVED: -
DATE:

0 1/2 1

IF THIS BAR DOES NOT MEASURE 1" THEN DRAWING IS NOT TO FULL SCALE

PROJECT NO. 400530

50-A-101

SHEET OF

PLOTTED: 7/30/2019 11:52:58 AM

D400530

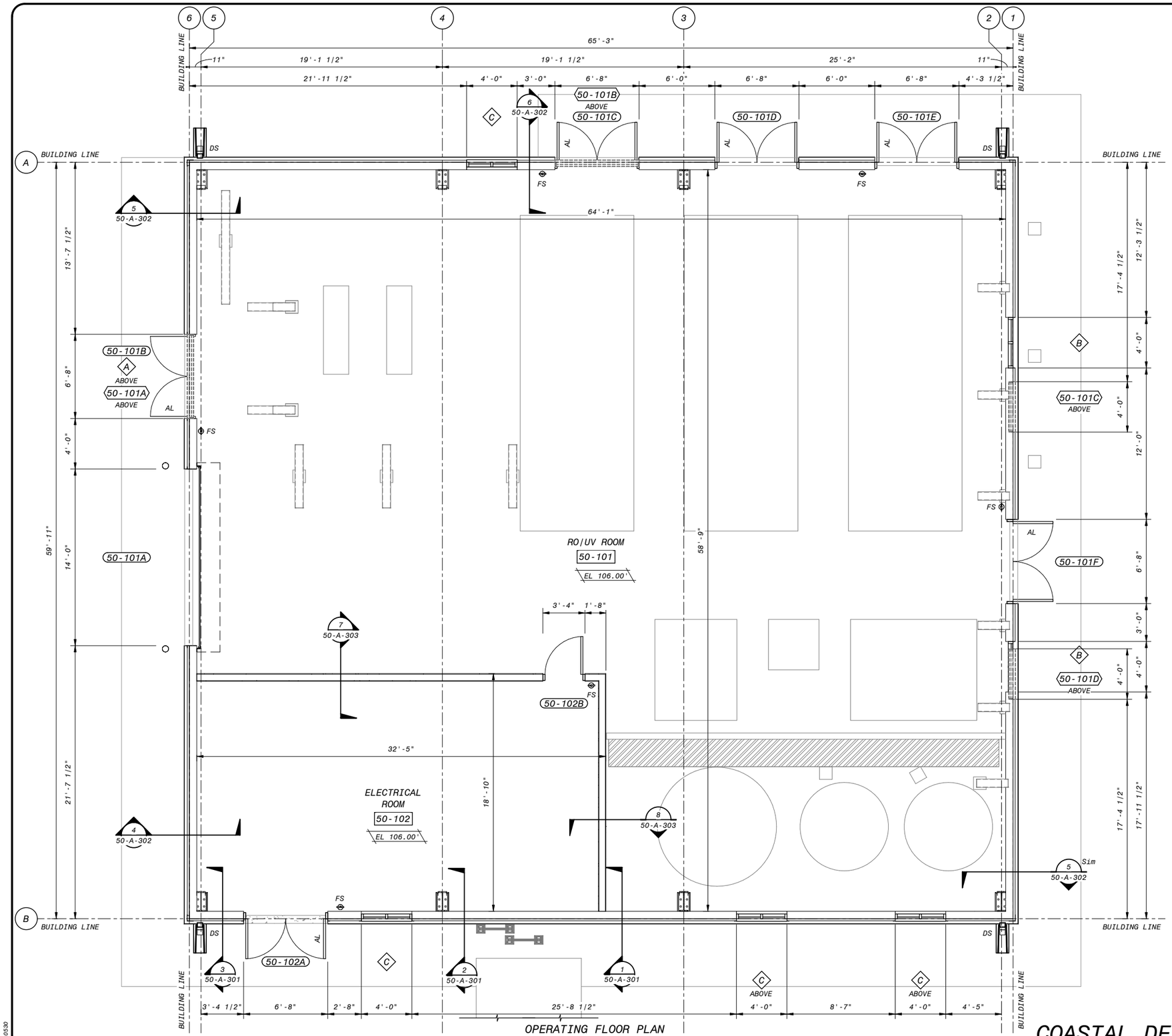


OPERATING FLOOR PLAN

1/4" = 1'-0"

GENERAL SHEET NOTES

SHEET KEYNOTES

4' 2' 0' 4' 8'

1/4" = 1'-0"

COASTAL DEVELOPMENT PERMIT PLANS

| NO. | BY | CHK | APP | DATE | REVISIONS AND RECORD OF USE |
|---|---|---|---|---|---|
| B | BDF | BDF | EVB | 7/30/2019 | 60% SUBMITTAL |
| A | BDF | BDF | EVB | 3/5/2019 | 30% SUBMITTAL |

FRASER SEIPLE ARCHITECTS

JOINT VENTURE

BLACK & VEATCH

FILANC

CITY OF MORRO BAY
MORRO BAY WATER
RECLAMATION FACILITY (WRF)

RO/UV BUILDING
ARCHITECTURAL
OPERATING FLOOR PLAN

DESIGNED: BDF
DETAILED: ANH
CHECKED: -
APPROVED: -
DATE:

0 1/2 1

IF THIS BAR DOES NOT MEASURE 1" THEN DRAWING IS NOT TO FULL SCALE

PROJECT NO.
400530

50-A-102

SHEET
OF

PLOTTED: 7/30/2019 11:52:59 AM

D400530

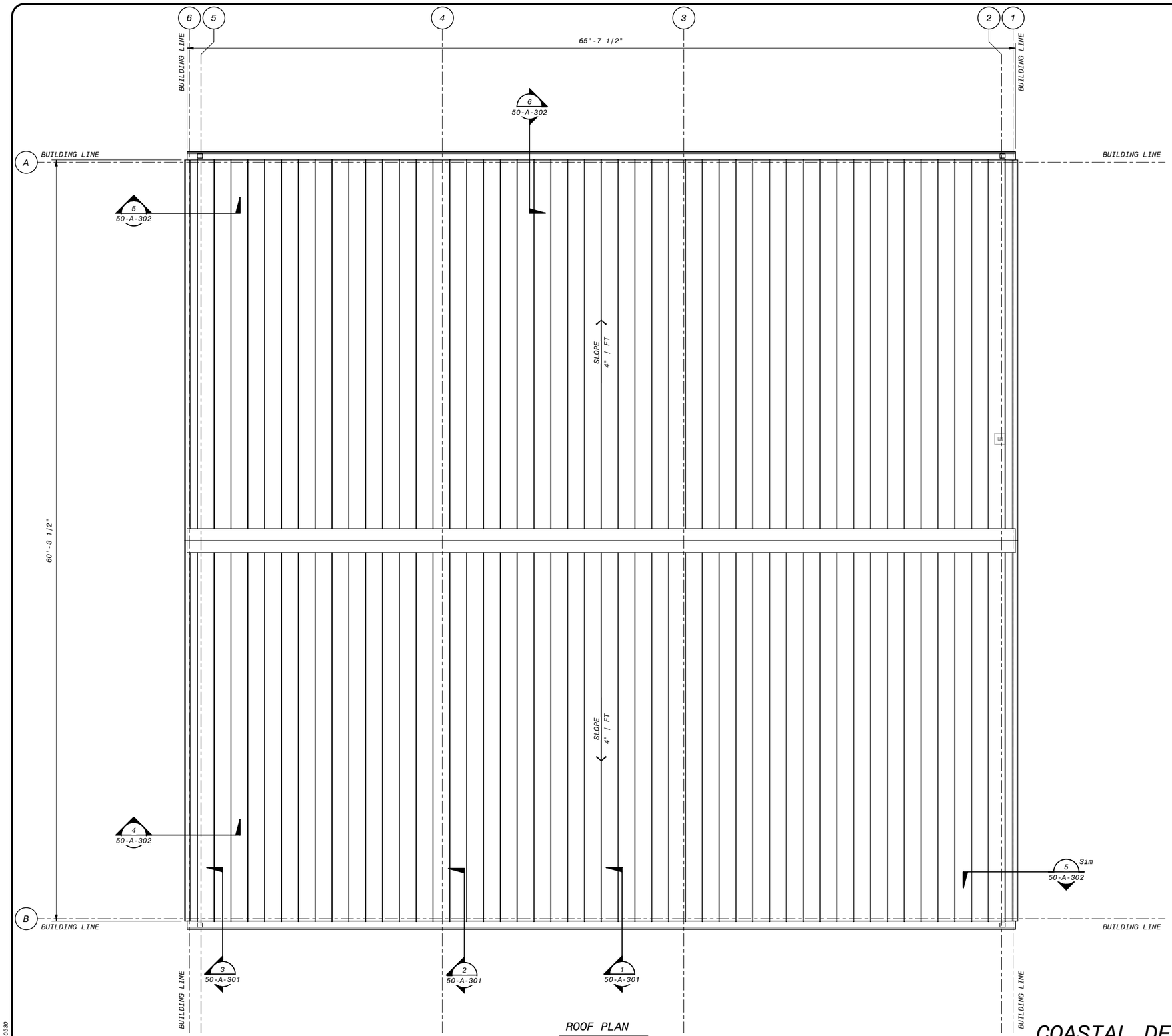


ROOF PLAN
1/4" = 1'-0"

GENERAL SHEET NOTES

SHEET KEYNOTES

4' 2' 0' 4' 8'
1/4" = 1'-0"

COASTAL DEVELOPMENT PERMIT PLANS

| NO. | BY | CHK | APP |
|---|---|---|---|
| B | BDF | BDF | EVB |

60% SUBMITTAL
REVISIONS AND RECORD OF USE
DATE 7/30/2019

FRASER SEIPLE ARCHITECTS
JOINT VENTURE
FILANC
BLACK & VEATCH

CITY OF MORRO BAY
MORRO BAY WATER
RECLAMATION FACILITY (WRF)

RO/UV BUILDING
ARCHITECTURAL
ROOF PLAN

DESIGNED: BDF
DETAILED: ANH
CHECKED: -
APPROVED: -
DATE:

0 1/2 1
IF THIS BAR DOES NOT MEASURE 1" THEN DRAWING IS NOT TO FULL SCALE

PROJECT NO.
400530

50-A-103
SHEET
OF

PLOTTED: 7/30/2019 11:52:59 AM
D400530

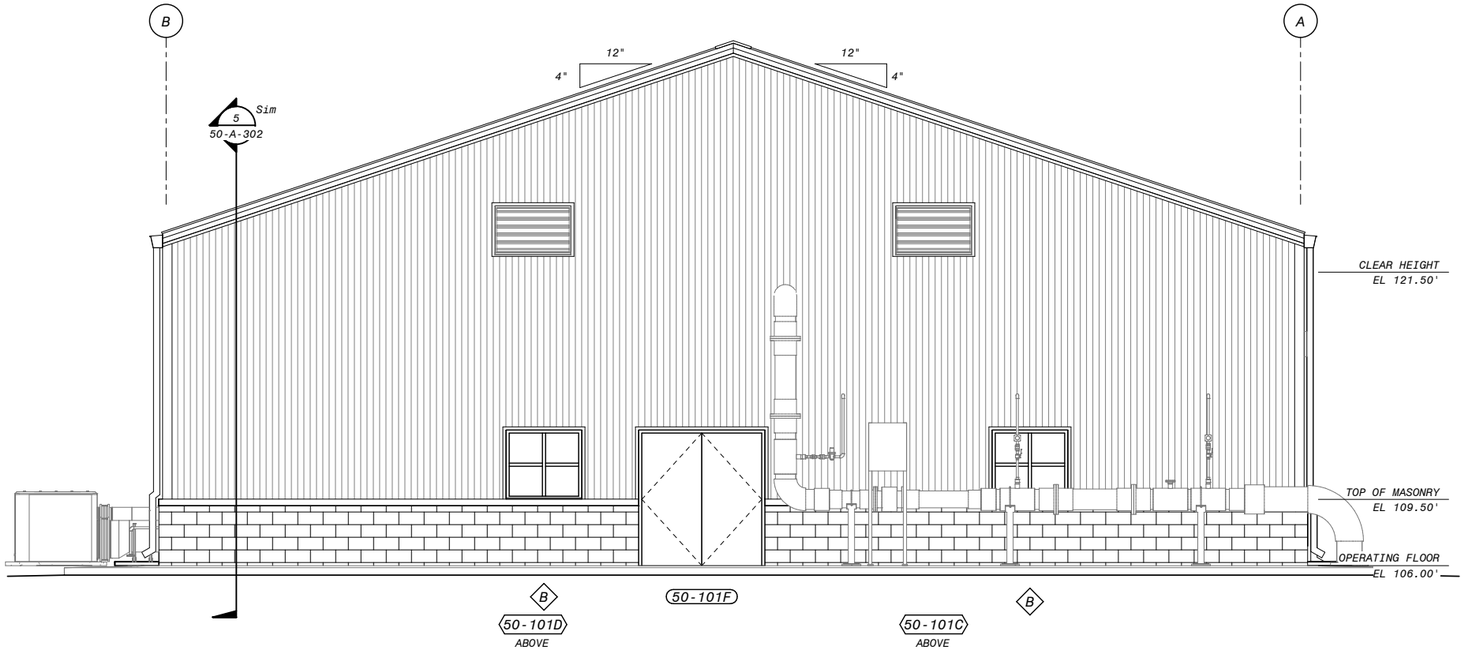


NORTH ELEVATION

1/4" = 1'-0"

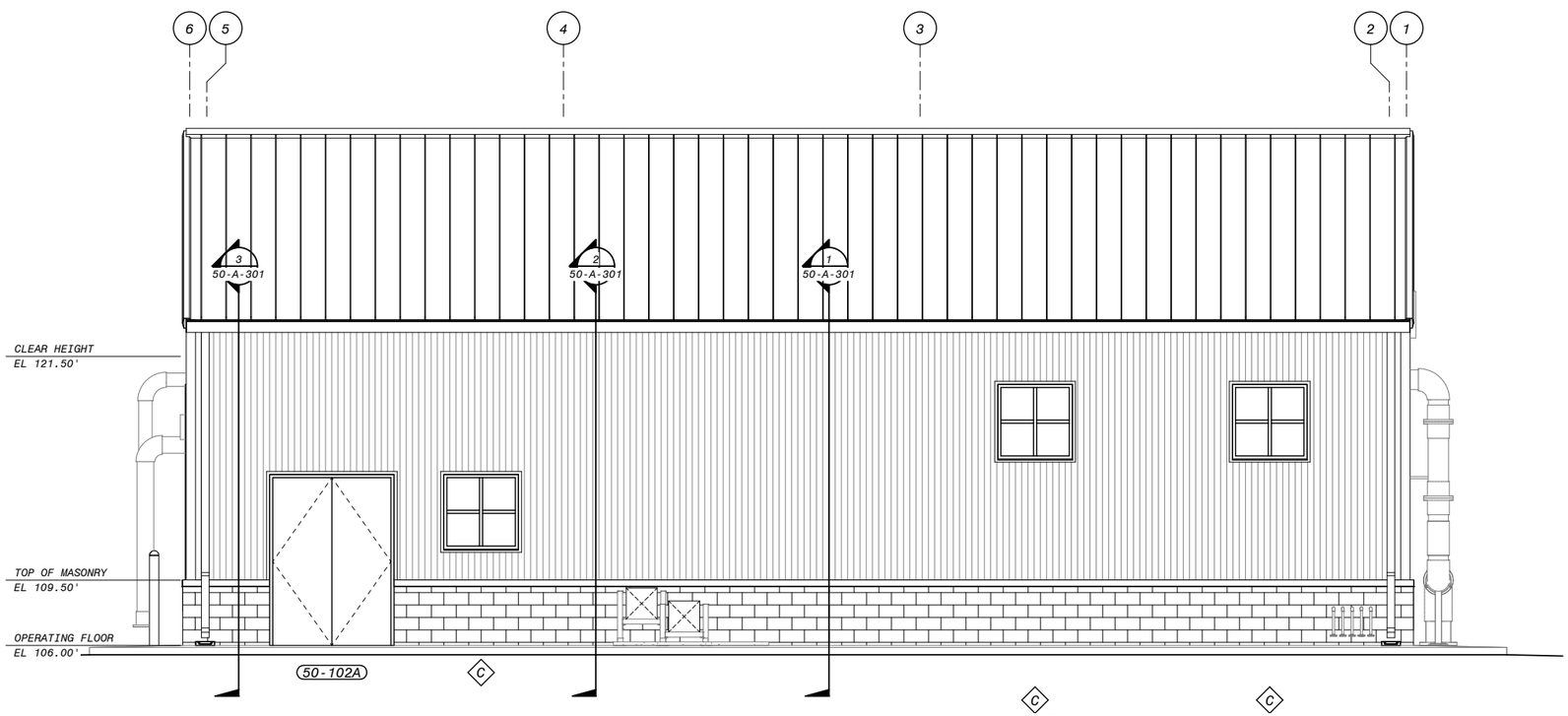


EAST ELEVATION

1/4" = 1'-0"

GENERAL SHEET NOTES

SHEET KEYNOTES

4' 2' 0' 4' 8'

1/4" = 1'-0"

COASTAL DEVELOPMENT PERMIT PLANS

| NO. | BY | CHK | APP | DATE | REVISIONS AND RECORD OF USE |
|---|---|---|---|---|---|
| B | BDF | BDF | EVB | 7/30/2019 | 60% SUBMITTAL |

FRASER SEIPLE ARCHITECTS

JOINT VENTURE

FILANC

BLACK & VEATCH

CITY OF MORRO BAY
MORRO BAY WATER
RECLAMATION FACILITY (WRF)

RO/UV BUILDING
ARCHITECTURAL
BUILDING ELEVATIONS

DESIGNED: BDF
DETAILED: ANH
CHECKED: -
APPROVED: -
DATE:

0 1/2 1

IF THIS BAR DOES NOT MEASURE 1" THEN DRAWING IS NOT TO FULL SCALE

PROJECT NO.
400530

50-A-201
SHEET
OF

PLOTTED: 7/30/2019 11:53:02 AM

D400530

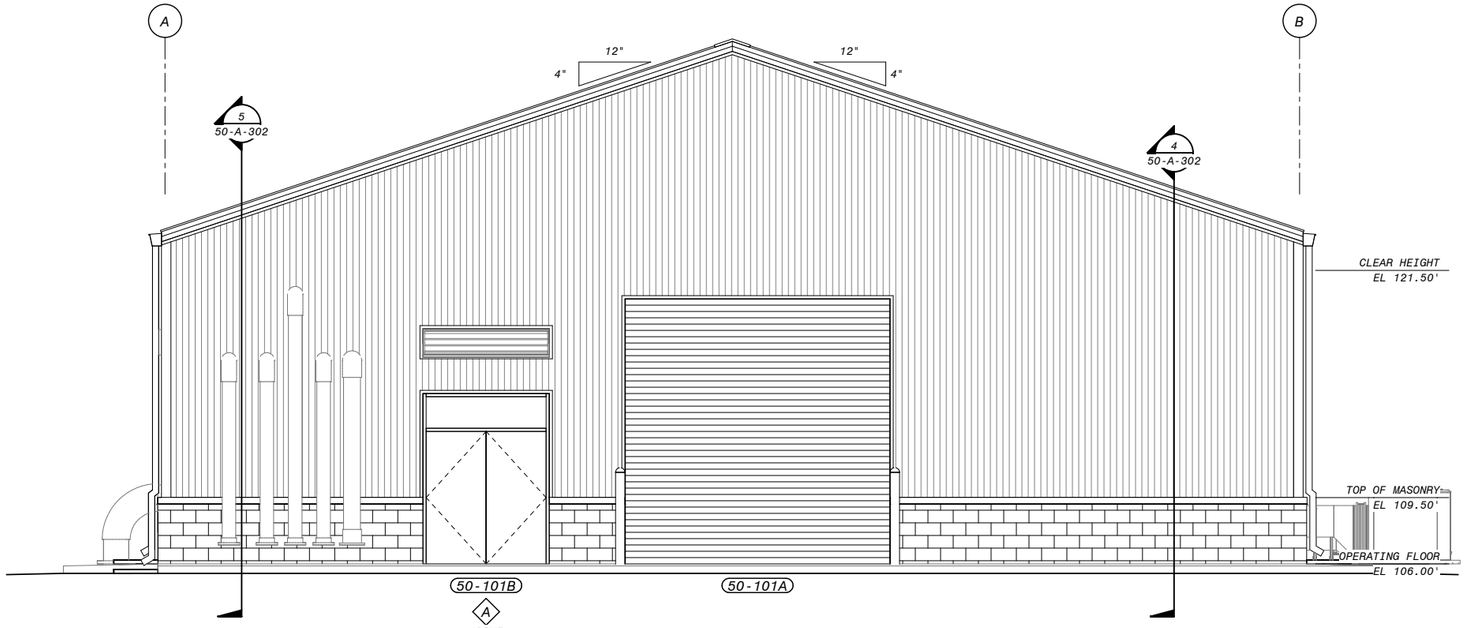


SOUTH ELEVATION

1/4" = 1'-0"

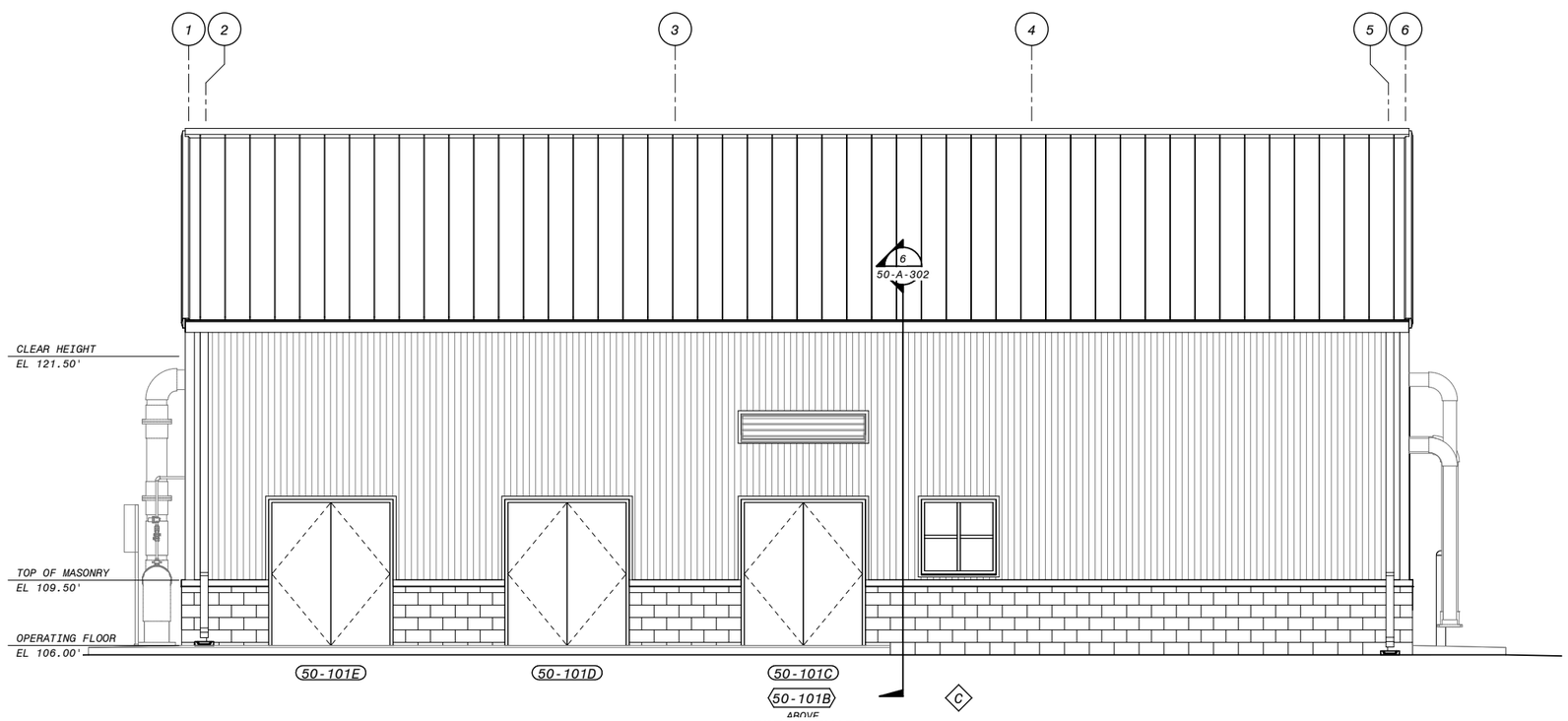


WEST ELEVATION

1/4" = 1'-0"

GENERAL SHEET NOTES

SHEET KEYNOTES

4' 2' 0' 4' 8'

1/4" = 1'-0"

COASTAL DEVELOPMENT PERMIT PLANS

| NO. | BY | CHK | APP |
|---|---|---|---|
| B | BDF | BDF | EVB |

60% SUBMITTAL

REVISIONS AND RECORD OF USE

DATE 7/30/2019

FRASER SEIPLE ARCHITECTS

JOINT VENTURE

FILANC®

BLACK & VEATCH

CITY OF MORRO BAY
MORRO BAY WATER
RECLAMATION FACILITY (WRF)

RO/UV BUILDING
ARCHITECTURAL
BUILDING ELEVATIONS

DESIGNED: BDF
DETAILED: ANH
CHECKED: -
APPROVED: -
DATE:

0 1/2 1

IF THIS BAR DOES NOT MEASURE 1" THEN DRAWING IS NOT TO FULL SCALE

PROJECT NO.
400530

50-A-202
SHEET
OF

PLOTTED: 7/30/2019 11:53:04 AM

D400530

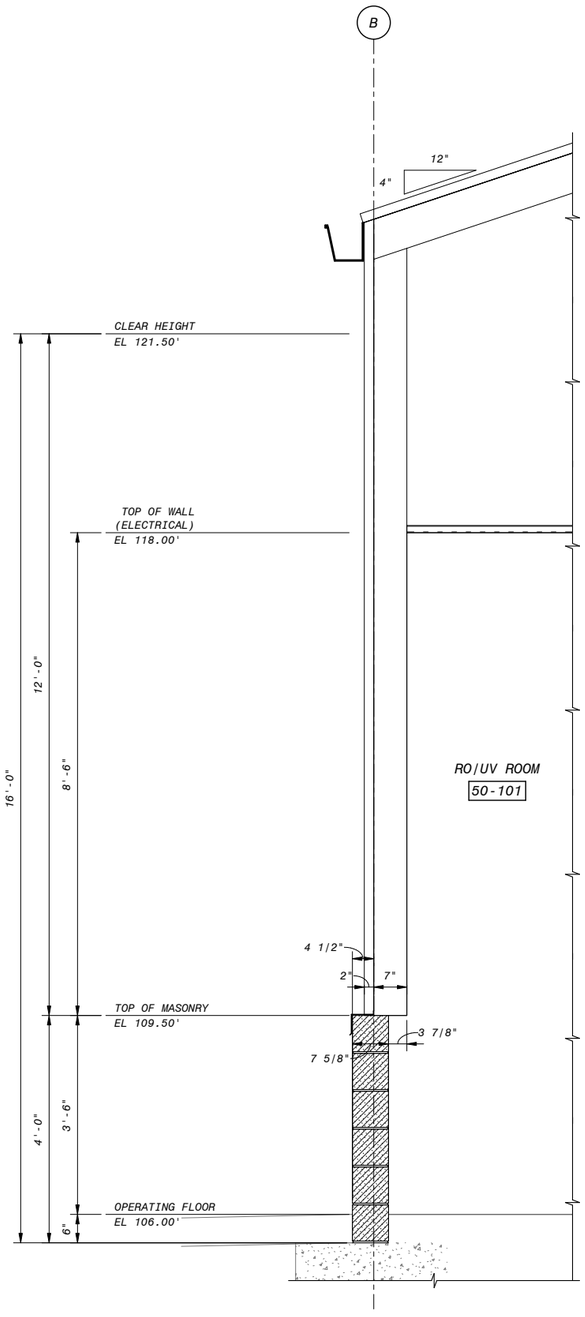


1 SECTION
50-A-102 3/4" = 1'-0"

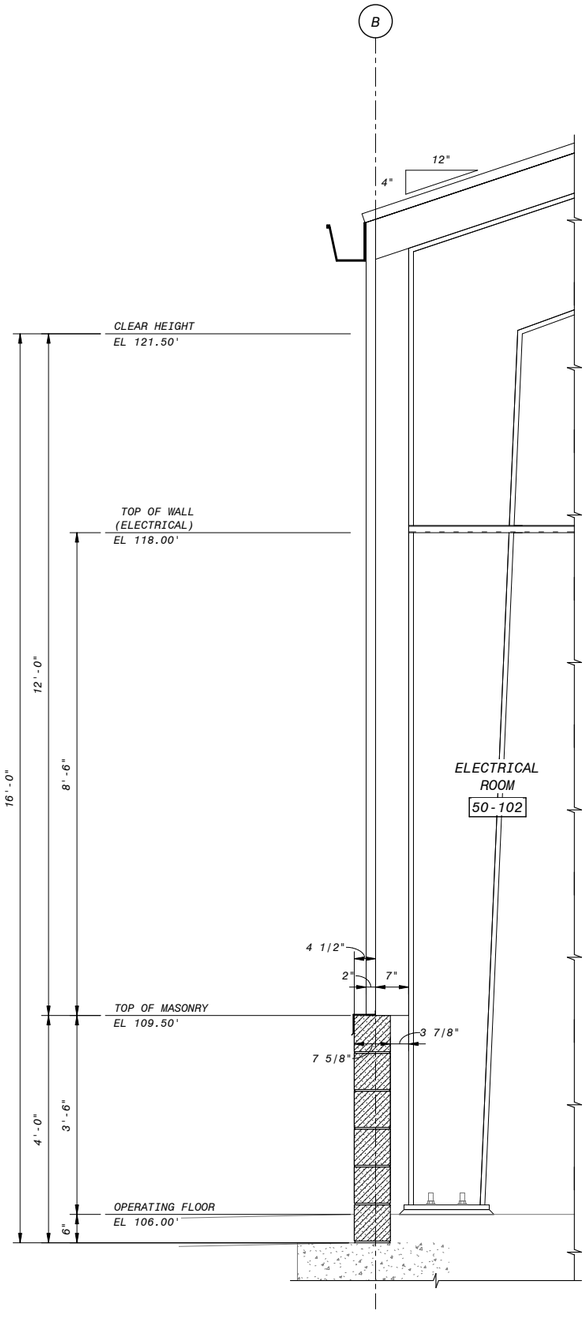


2 SECTION
50-A-102 3/4" = 1'-0"

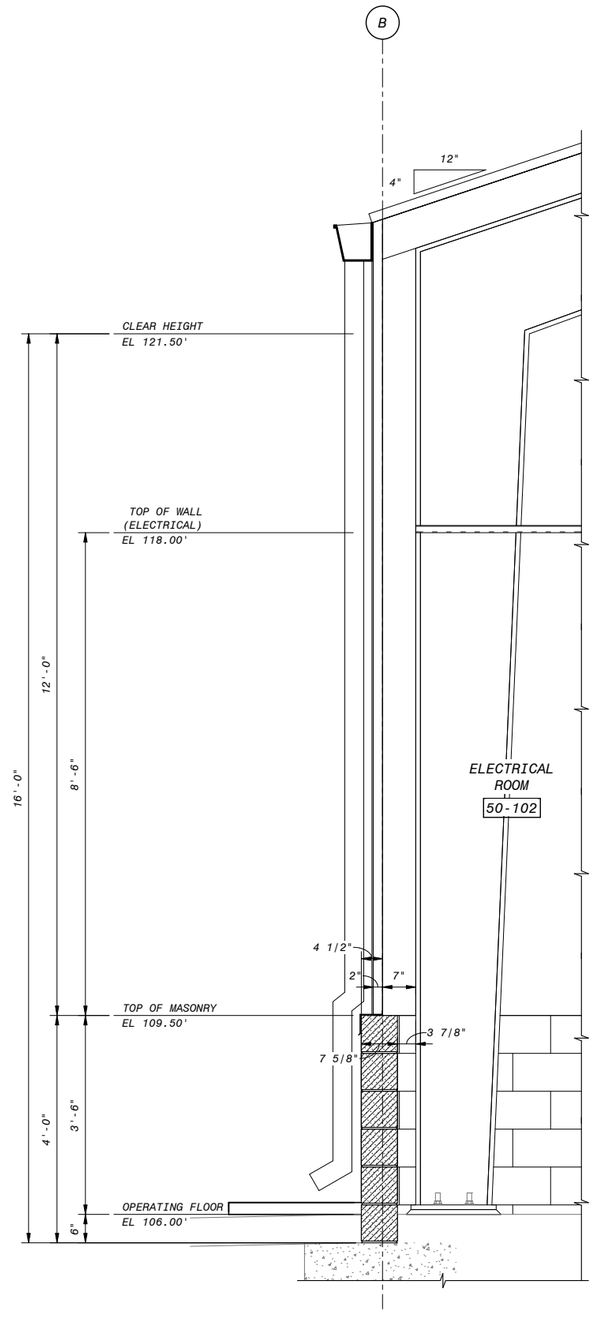


3 SECTION
50-A-102 3/4" = 1'-0"

## GENERAL SHEET NOTES

1. FOR VERTICAL REINFORCING AND BOND BEAMS IN MASONRY DESIGN - SEE STRUCTURAL DRAWINGS
2. FOR HORIZONTAL JOINT REINFORCING - SEE SPECIFICATION SECTION 04200

## SHEET KEYNOTES

12" 6" 0' 1' 2' 3'
3/4" = 1'-0"

# COASTAL DEVELOPMENT PERMIT PLANS

| NO. | BY | CHK | APP | REVISIONS AND RECORD OF USE | DATE |
|---|---|---|---|---|---|
| B | BDF | BDF | EVB | 60% SUBMITTAL | 7/30/2019 |

FRASER SEIPLE ARCHITECTS

JOINT VENTURE

FILANC® BLACK & VEATCH

CITY OF MORRO BAY
MORRO BAY WATER
RECLAMATION FACILITY (WRF)

RO/UV BUILDING
ARCHITECTURAL
WALL SECTIONS

DESIGNED: BDF
DETAILED: ANH
CHECKED: -
APPROVED: -
DATE:

0 1/2 1
IF THIS BAR DOES NOT MEASURE 1" THEN DRAWING IS NOT TO FULL SCALE

PROJECT NO.
400530

50-A-301
SHEET
OF

PLOTTED: 7/30/2019 11:53:05 AM
D400530

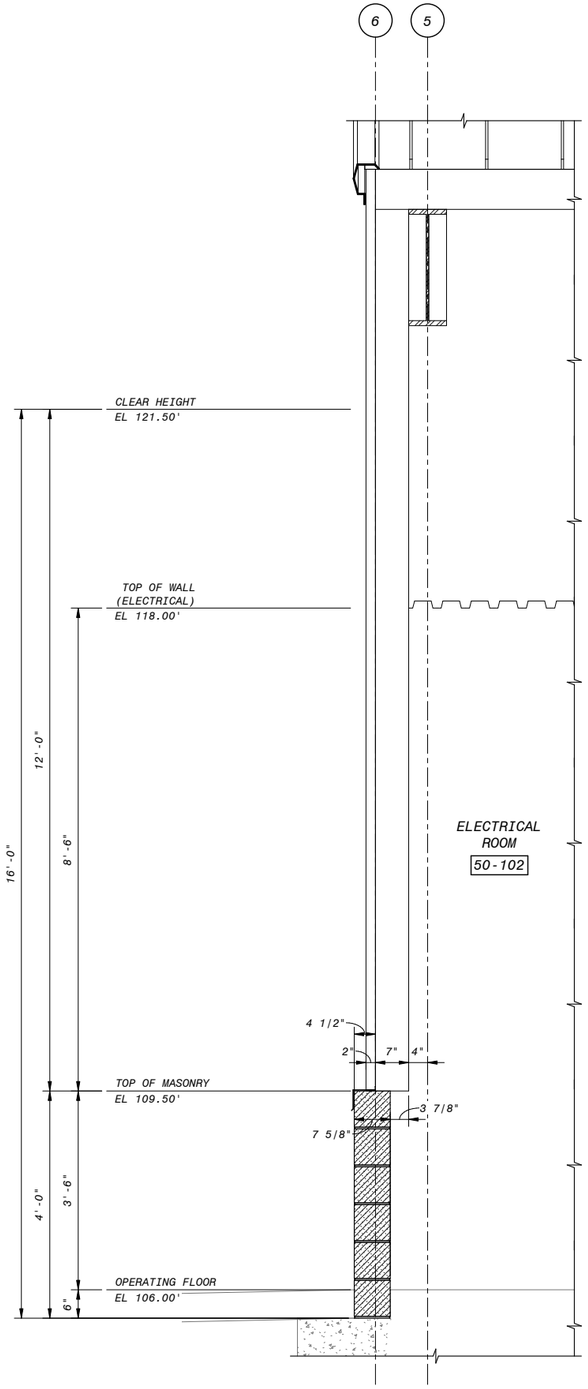


4 SECTION
50-A-102 3/4" = 1'-0"

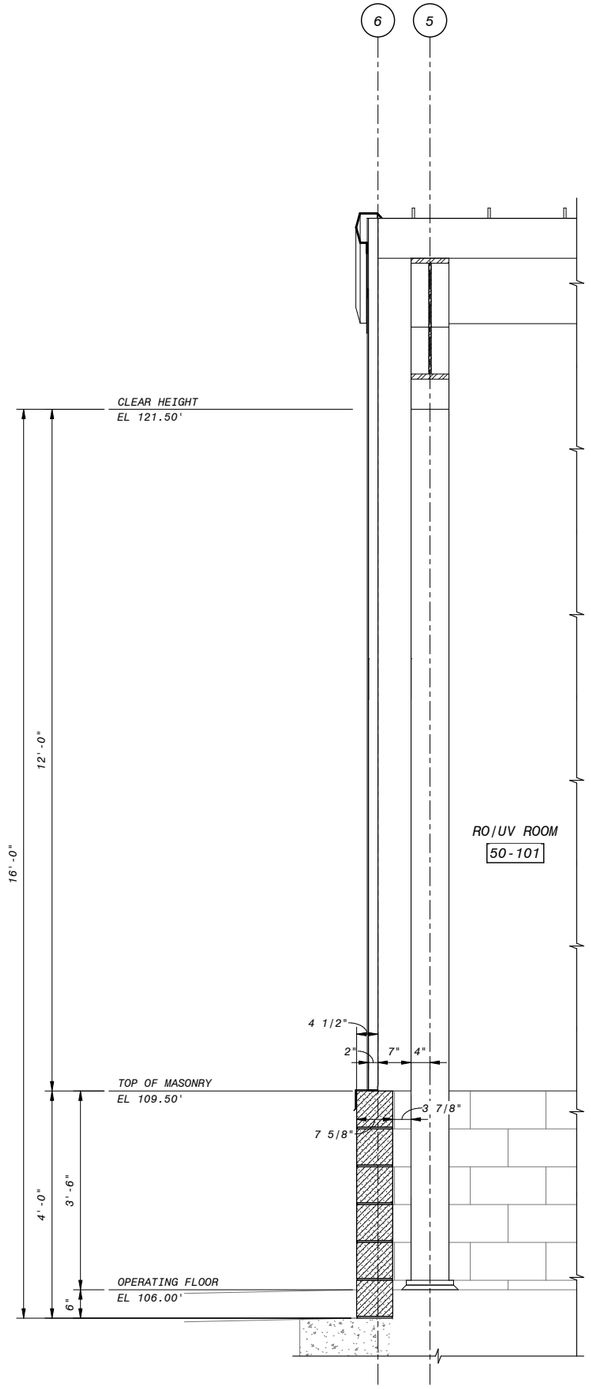


5 SECTION
50-A-102 3/4" = 1'-0"

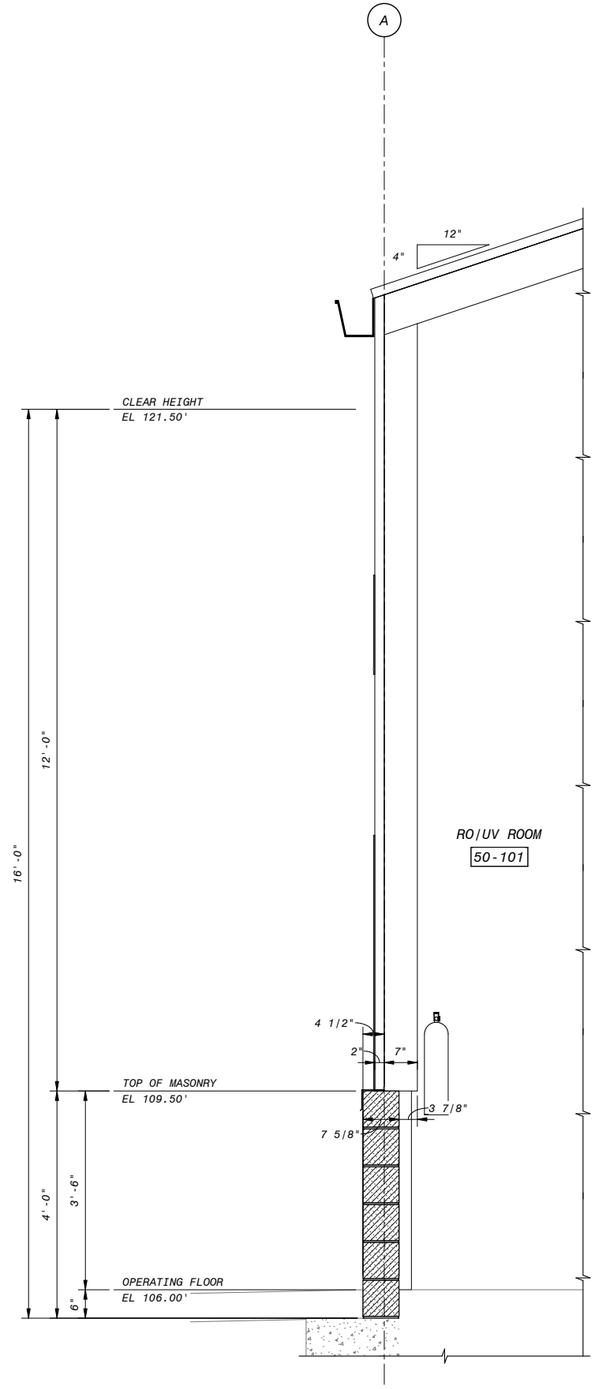


6 SECTION
50-A-102 3/4" = 1'-0"

## GENERAL SHEET NOTES

1. FOR VERTICAL REINFORCING AND BOND BEAMS IN MASONRY DESIGN - SEE STRUCTURAL DRAWINGS
2. FOR HORIZONTAL JOINT REINFORCING - SEE SPECIFICATION SECTION 04200

## SHEET KEYNOTES

12" 6" 0' 1' 2' 3'
3/4" = 1'-0"

# COASTAL DEVELOPMENT PERMIT PLANS

| NO. | BY | CHK | APP |
|---|---|---|---|
| B | BDF | BDF | EVB |

60% SUBMITTAL
REVISIONS AND RECORD OF USE
DATE: 7/30/2019

FRASER SEIPLE ARCHITECTS
JOINT VENTURE
FILANC
BLACK & VEATCH

CITY OF MORRO BAY
MORRO BAY WATER
RECLAMATION FACILITY (WRF)

RO/UV BUILDING
ARCHITECTURAL
WALL SECTIONS

DESIGNED: BDF
DETAILED: ANH
CHECKED: -
APPROVED: -
DATE:

0 1/2 1
IF THIS BAR DOES NOT MEASURE 1" THEN DRAWING IS NOT TO FULL SCALE

PROJECT NO.
400530

50-A-302
SHEET
OF

PLOTTED: 7/30/2019 11:53:05 AM
D400530

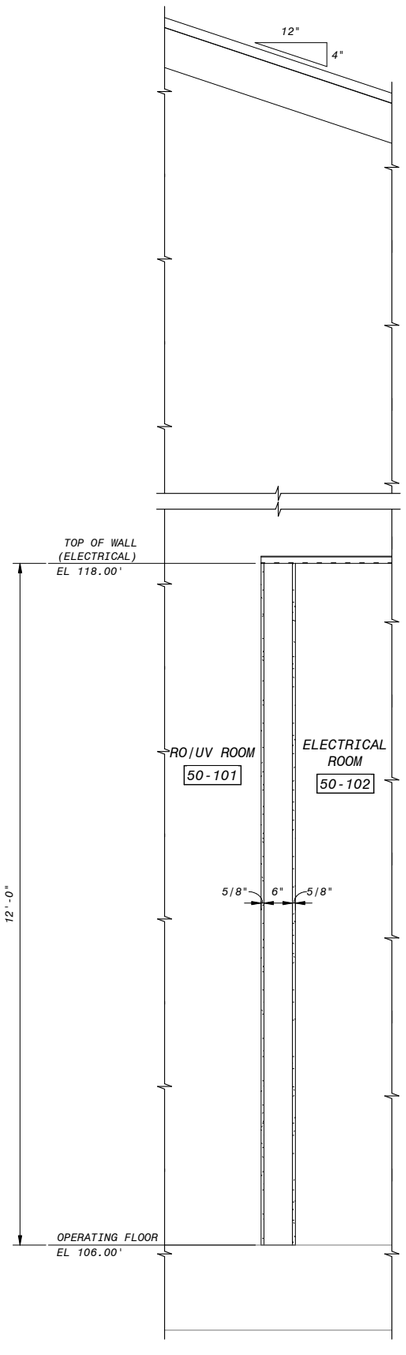


7 SECTION
50-A-102 3/4" = 1'-0"

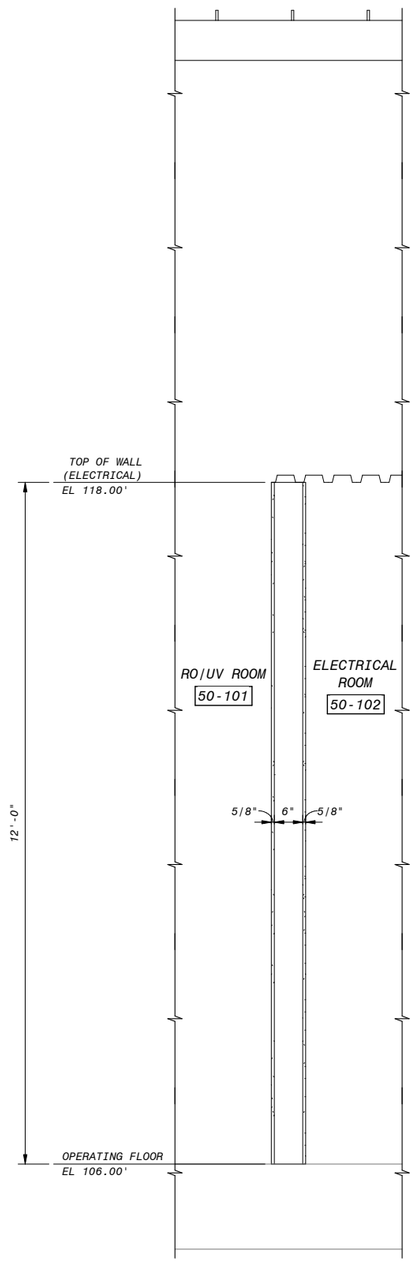


8 SECTION
50-A-102 3/4" = 1'-0"

## GENERAL SHEET NOTES

1. FOR VERTICAL REINFORCING AND BOND BEAMS IN MASONRY DESIGN - SEE STRUCTURAL DRAWINGS
2. FOR HORIZONTAL JOINT REINFORCING - SEE SPECIFICATION SECTION 04200

## SHEET KEYNOTES

| NO. | BY | CHK | APP |
|---|---|---|---|
| B | BDF | BDF | EVB |

| DATE | REVISIONS AND RECORD OF USE |
|---|---|
| 7/30/2019 | 60% SUBMITTAL |

FRASER SEIPLE ARCHITECTS

JOINT VENTURE

FILANC®

BLACK & VEATCH

CITY OF MORRO BAY
MORRO BAY WATER
RECLAMATION FACILITY (WRF)

RO/UV BUILDING
ARCHITECTURAL
WALL SECTIONS

DESIGNED: BDF
DETAILED: ANH
CHECKED: -
APPROVED: -
DATE:

0 1/2 1
IF THIS BAR DOES NOT MEASURE 1" THEN DRAWING IS NOT TO FULL SCALE

12" 6" 0' 1' 2' 3'
3/4" = 1'-0"

PROJECT NO.
400530

50-A-303
SHEET
OF

COASTAL DEVELOPMENT PERMIT PLANS

PLOTTED: 7/30/2019 11:55:55 AM
D400530

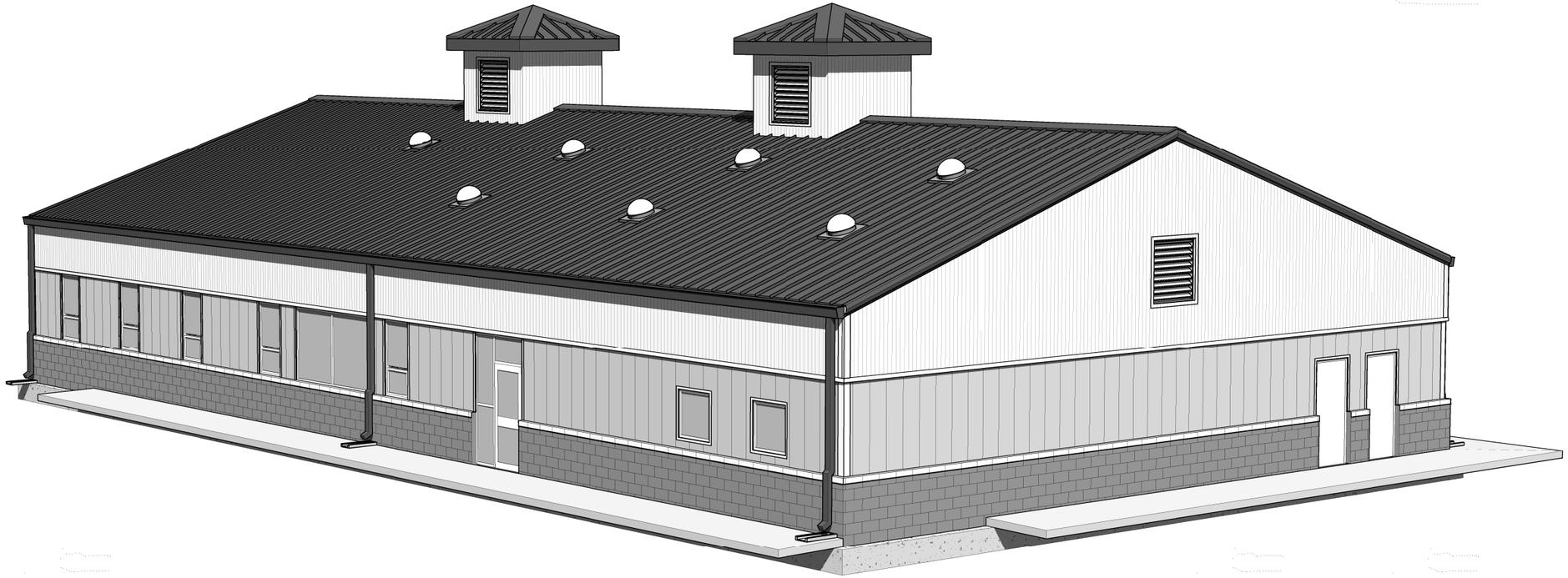

NORTHWEST PERSPECTIVE

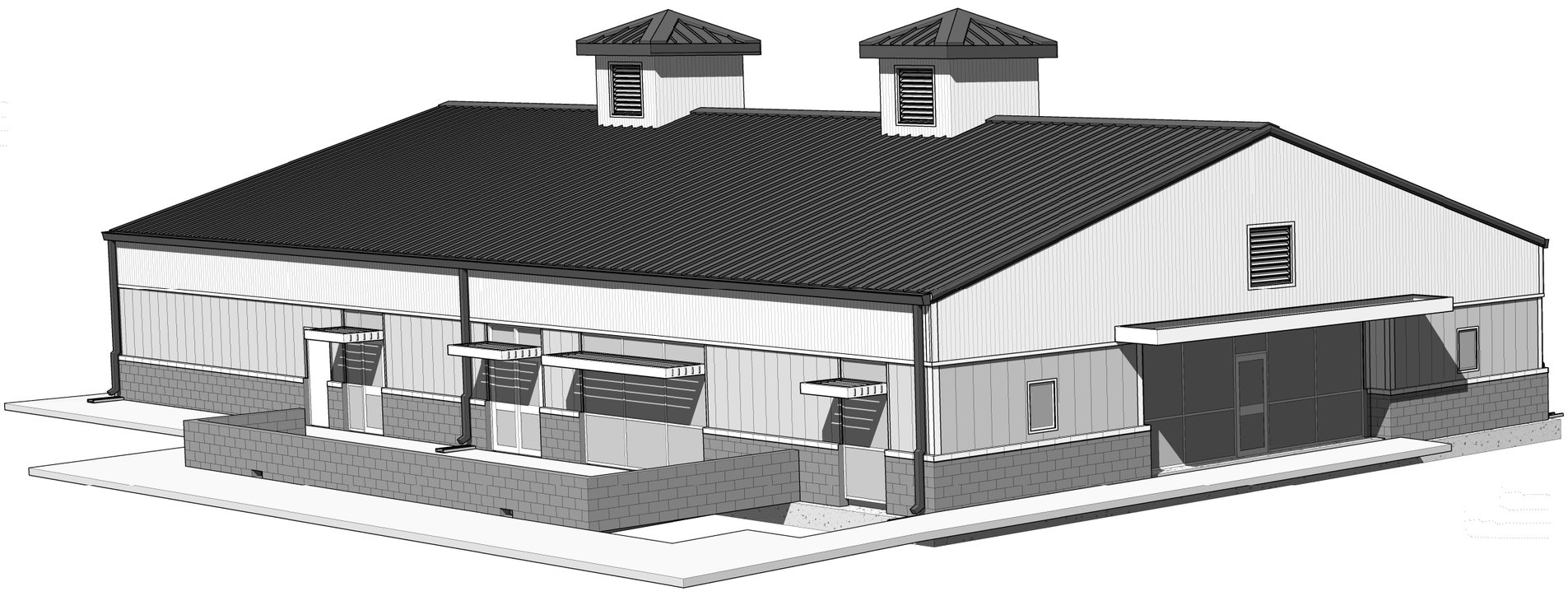

SOUTHEAST PERSPECTIVE

# COASTAL DEVELOPMENT PERMIT PLANS

| DATE | REVISIONS AND RECORD OF USE | NO. | BY | CHK | APP |
|---|---|---|---|---|---|
| 7/30/2019 | 60% SUBMITTAL | B | EVB | BDF | EVB |
| 3/5/2019 | 30% SUBMITTAL | A | EVB | BDF | EVB |

FRASER SEIPLE ARCHITECTS

JOINT VENTURE

FILANC®

BLACK & VEATCH

CITY OF MORRO BAY
MORRO BAY WATER
RECLAMATION FACILITY (WRF)

OPERATIONS BUILDING
ARCHITECTURAL
PERSPECTIVES

DESIGNED: BDF
DETAILED: ANH
CHECKED: -
APPROVED: -
DATE:

0 1/2 1

IF THIS BAR DOES NOT MEASURE 1" THEN DRAWING IS NOT TO FULL SCALE

PROJECT NO.
400530

95-A-001
SHEET
OF

PLOTTED: 7/29/2019 8:49:06 PM
D400530

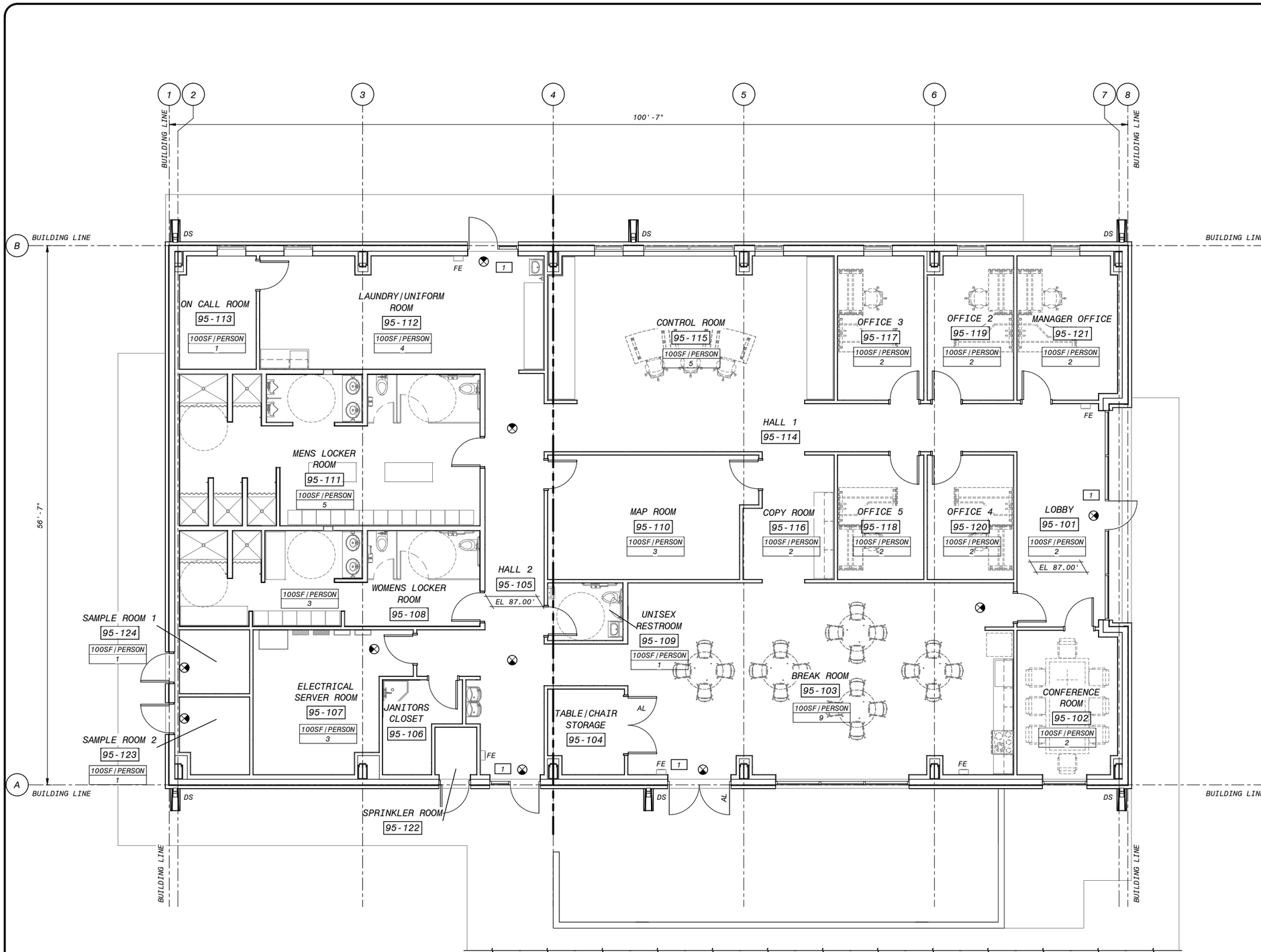


OPERATING FLOOR - LIFE SAFETY PLAN

3/16" = 1'-0"

## GENERAL SHEET NOTES

## SHEET KEYNOTES

## LIFE SAFETY LEGEND

| | |
|---|---|
| | FIRE EXTINGUISHER (FE) |
| X'-X" | PATH OF EGRESS TRAVEL |
| 100SF/PERSON / 10 | OCCUPANTS PER SF OCCUPANT LOAD |
| 1 | CUMULATIVE OCCUPANT LOAD AT EXIT |
| | EXIT SYMBOL |
| AL | ACTIVE LEAF |
| DS | DOWNSPOUT |

## BUILDING CODE ANALYSIS

| OPERATIONS BUILDING | |
|---|---|
| APPLICABLE BUILDING CODES: | |
| OCCUPANCY | - |
| ACTUAL FLOOR AREA | 0,000 SF TOTAL |
| ACTUAL HEIGHT | 1 STORY (20.33 FT) |
| TYPE OF CONSTRUCTION | TYPE -- |
| ALLOWABLE HEIGHT | 0,000 SF |
| ALLOWABLE AREA | 2 STORIES (55 FT) |
| DESIGN OCCUPANT LOAD | 0 PERSONS |
| ADA ACCESSIBILITY | - |
| OCCUPANCY SEPARATION | - |
| FIRE SPRINKLERS | - |

6" 4' 2' 0' 5' 10'

3/16" = 1'-0"

# COASTAL DEVELOPMENT PERMIT PLANS

| NO. | BY | CHK | APP | DATE | REVISIONS AND RECORD OF USE |
|---|---|---|---|---|---|
| B | EVB | BDF | EVB | 7/30/2019 | 60% SUBMITTAL |

FRASER SEIPLE ARCHITECTS

JOINT VENTURE

BLACK & VEATCH

FILANC

CITY OF MORRO BAY
MORRO BAY WATER
RECLAMATION FACILITY (WRF)

OPERATIONS BUILDING
ARCHITECTURAL
OPERATING FLOOR - LIFE SAFETY PLAN

DESIGNED: BDF
DETAILED: ANH
CHECKED: -
APPROVED: -
DATE:

0 1/2 1

IF THIS BAR DOES NOT MEASURE 1" THEN DRAWING IS NOT TO FULL SCALE

PROJECT NO.
400530

95-A-101
SHEET
OF

PLOTTED: 7/29/2019 8:49:11 PM

D400530

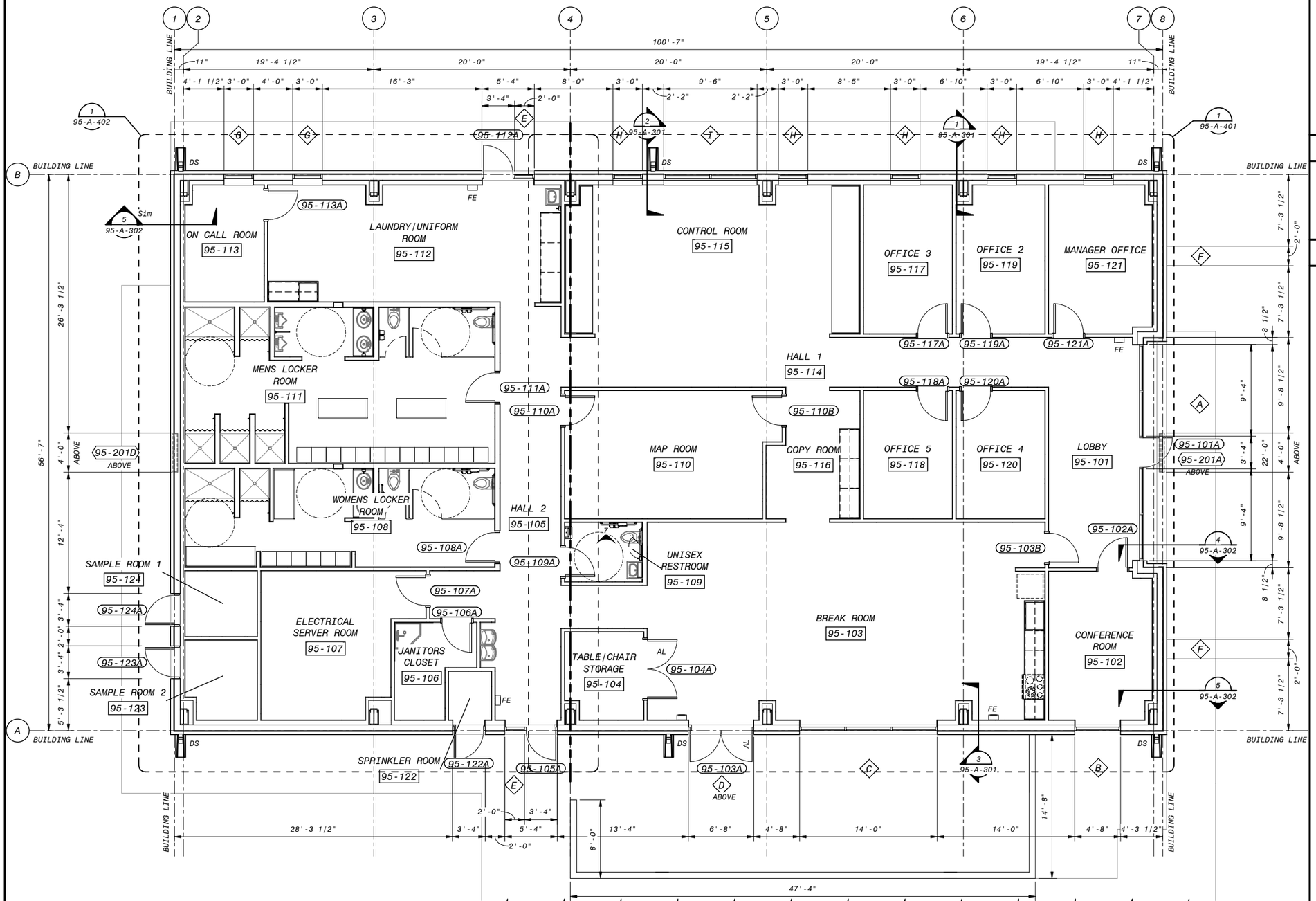


OPERATING FLOOR PLAN - OVERALL

3/16" = 1'-0"

GENERAL SHEET NOTES

SHEET KEYNOTES

| NO. | BY | CHK | APP | REVISIONS AND RECORD OF USE | DATE |
|---|---|---|---|---|---|
| B | EVB | BDF | EVB | 60% SUBMITTAL | 7/30/2019 |
| A | EVB | BDF | EVB | 30% SUBMITTAL | 3/5/2019 |

FRASER SEIPLE ARCHITECTS

JOINT VENTURE

FILANC

BLACK & VEATCH

CITY OF MORRO BAY
MORRO BAY WATER
RECLAMATION FACILITY (WRF)

OPERATIONS BUILDING
ARCHITECTURAL
OPERATING FLOOR PLAN

DESIGNED: BDF
DETAILED: ANH
CHECKED: -
APPROVED: -
DATE:

0 1/2 1
IF THIS BAR DOES NOT MEASURE 1" THEN DRAWING IS NOT TO FULL SCALE

PROJECT NO.
400530

95-A-102
SHEET
OF

6" 4' 2' 0' 5' 10'
3/16" = 1'-0"

COASTAL DEVELOPMENT PERMIT PLANS

PLOTTED: 7/29/2019 8:49:15 PM
D400530

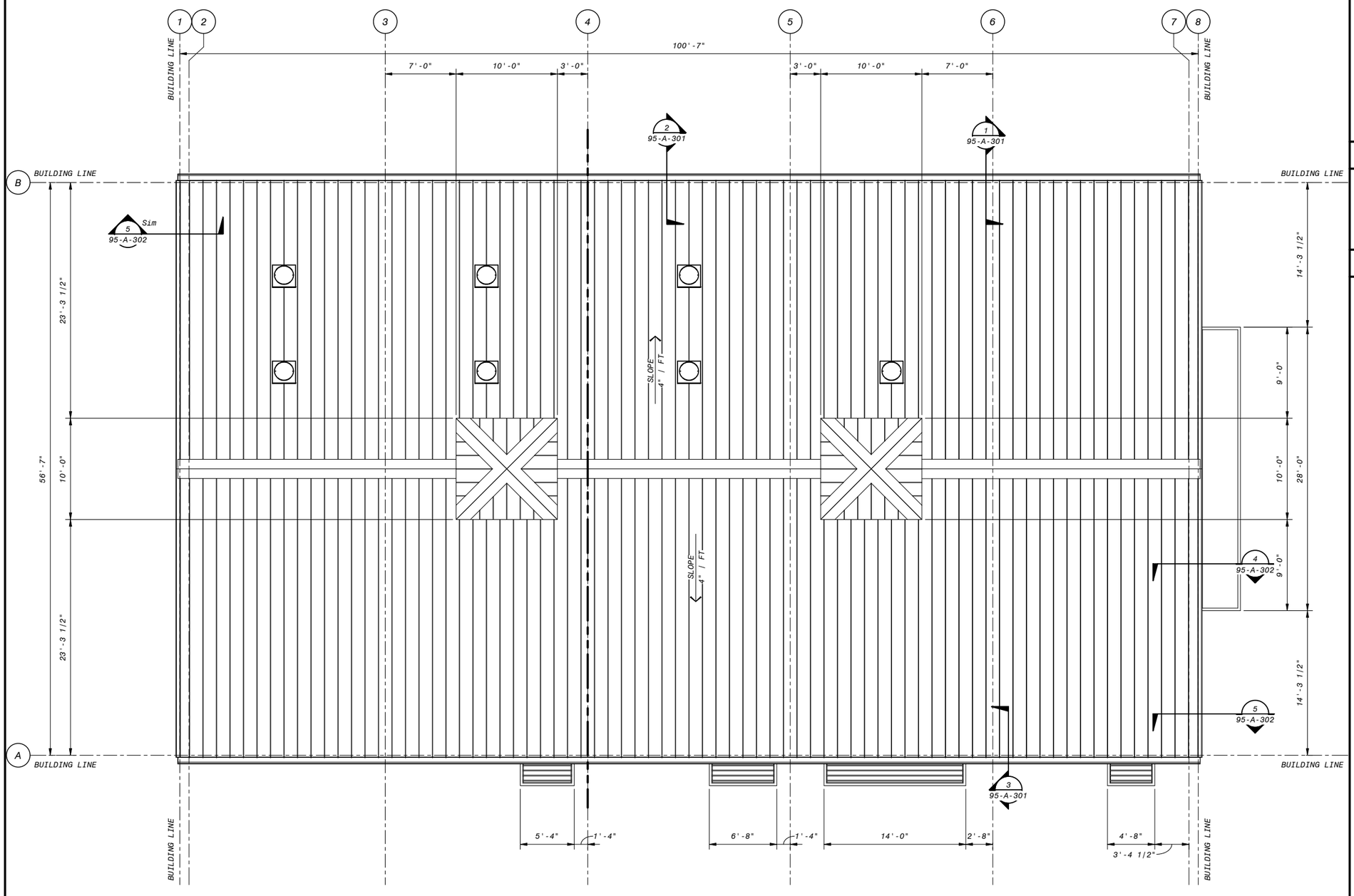


ROOF PLAN

3/16" = 1'-0"

GENERAL SHEET NOTES

SHEET KEYNOTES

| NO. | BY | CHK | APP |
|---|---|---|---|
| B | EVB | BDF | EVB |

60% SUBMITTAL

REVISIONS AND RECORD OF USE

DATE 7/30/2019

FRASER SEIPLE ARCHITECTS

JOINT VENTURE

FILANC

BLACK & VEATCH

CITY OF MORRO BAY
MORRO BAY WATER
RECLAMATION FACILITY (WRF)

OPERATIONS BUILDING
ARCHITECTURAL
ROOF PLAN

DESIGNED: BDF
DETAILED: ANH
CHECKED: -
APPROVED: -
DATE:

0 1/2 1

IF THIS BAR DOES NOT MEASURE 1" THEN DRAWING IS NOT TO FULL SCALE

PROJECT NO.
400530

95-A-103

SHEET
OF

6" 4' 2' 0' 5' 10'

3/16" = 1'-0"

COASTAL DEVELOPMENT PERMIT PLANS

PLOTTED: 7/29/2019 8:49:16 PM

D400530

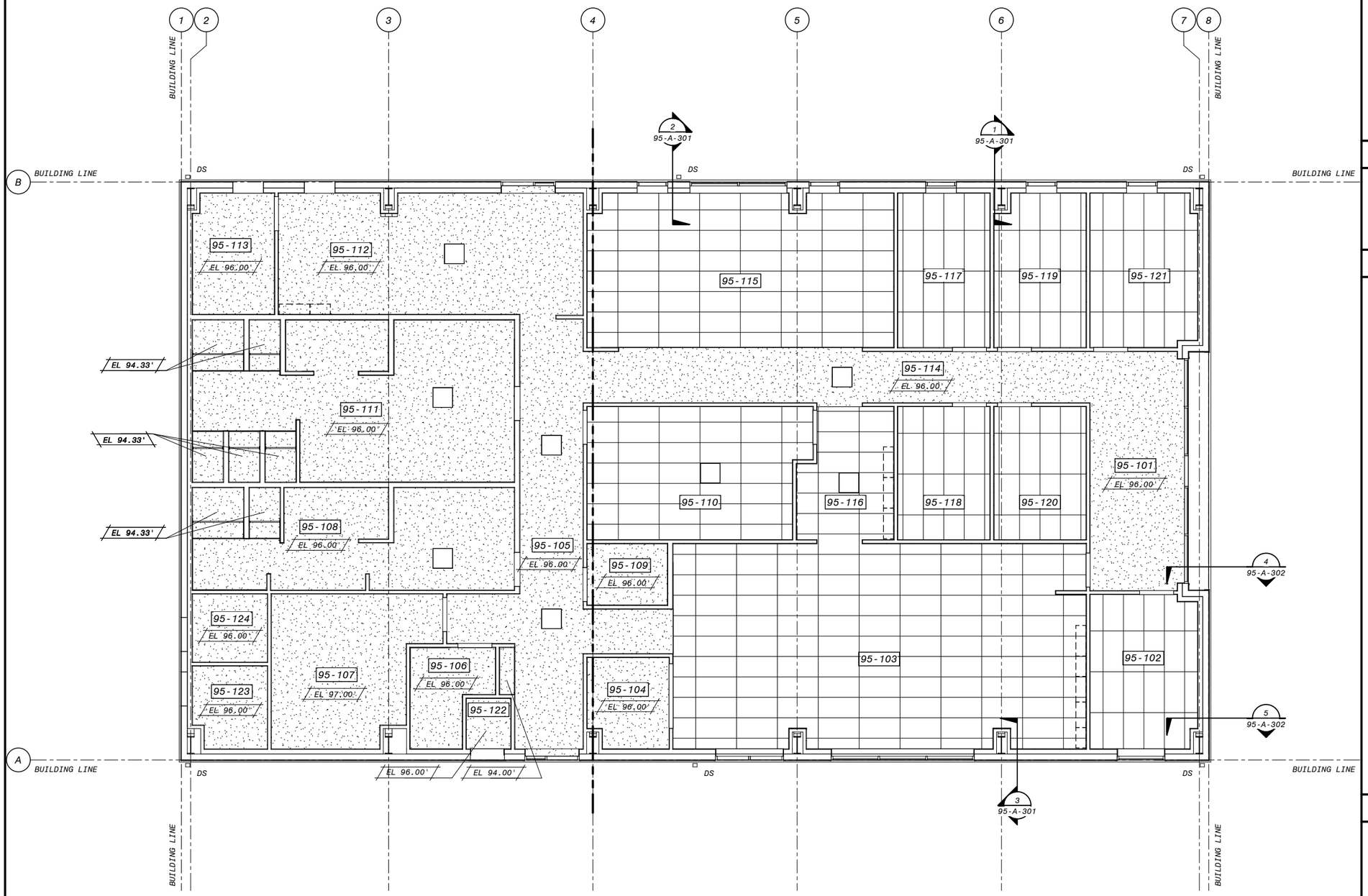


## REFLECTED CEILING PLAN

3/16" = 1'-0"

## GENERAL SHEET NOTES

## SHEET KEYNOTES

## CEILING PLAN LEGEND

LIGHT FIXTURES

EXHAUST DIFFUSER OR RETURN DIFFUSER

SUPPLY DIFFUSER

6" 4' 2' 0' 5' 10'

3/16" = 1'-0"

# COASTAL DEVELOPMENT PERMIT PLANS

| NO. | BY | CHK | APP |
|---|---|---|---|
| B | EVB | BDF | EVB |

60% SUBMITTAL

REVISIONS AND RECORD OF USE

DATE: 7/30/2019

FRASER SEIPLE ARCHITECTS

JOINT VENTURE

FILANC

BLACK & VEATCH

CITY OF MORRO BAY
MORRO BAY WATER
RECLAMATION FACILITY (WRF)

OPERATIONS BUILDING
ARCHITECTURAL
REFLECTED CEILING PLAN

DESIGNED: BDF
DETAILED: ANH
CHECKED: -
APPROVED: -
DATE:

0 1/2 1

IF THIS BAR DOES NOT MEASURE 1" THEN DRAWING IS NOT TO FULL SCALE

PROJECT NO.
400530

95-A-104
SHEET
OF

PLOTTED: 7/29/2019 8:49:18 PM

D400530

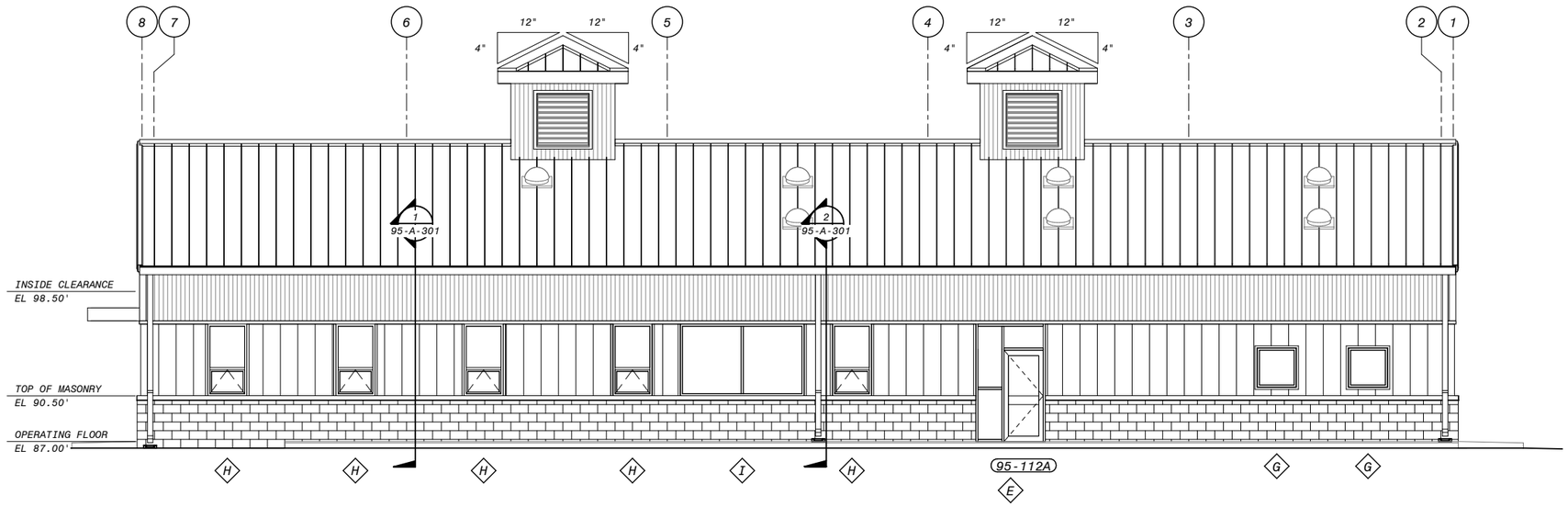


NORTH ELEVATION
3/16" = 1'-0"

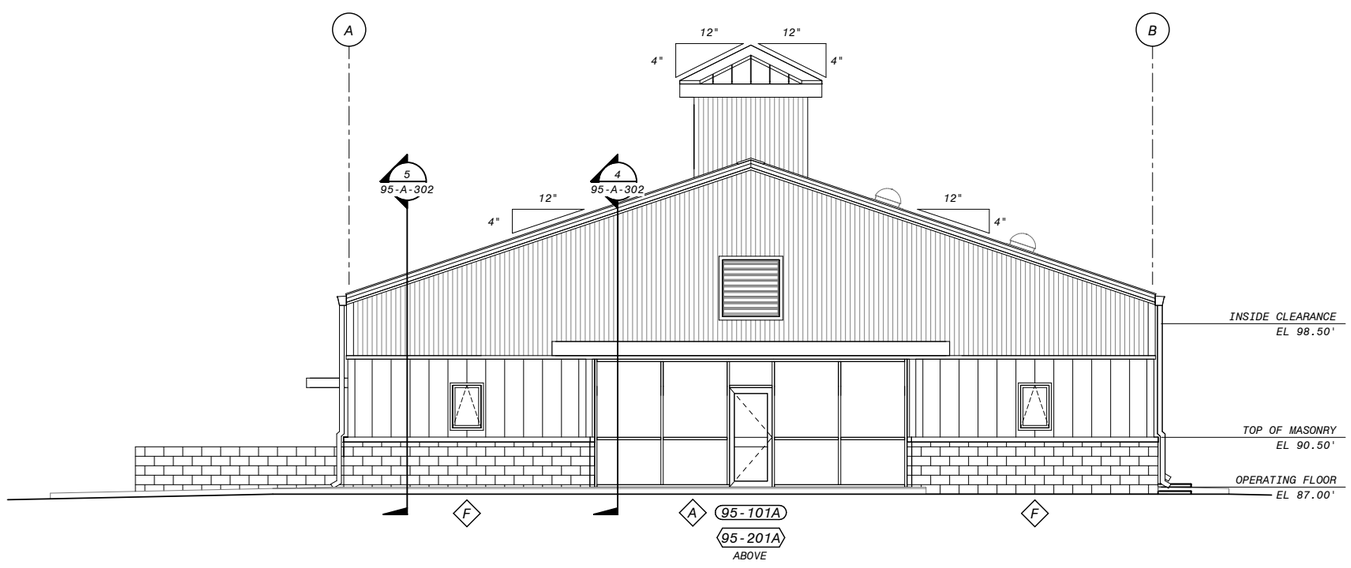


EAST ELEVATION
3/16" = 1'-0"

GENERAL SHEET NOTES

SHEET KEYNOTES

6" 4' 2' 0' 5' 10'
3/16" = 1'-0"

COASTAL DEVELOPMENT PERMIT PLANS

| NO. | BY | CHK | APP |
|---|---|---|---|
| B | EVB | BDF | EVB |

60% SUBMITTAL
REVISIONS AND RECORD OF USE
7/30/2019
DATE

FRASER SEIPLE ARCHITECTS
JOINT VENTURE
FILANC
BLACK & VEATCH

CITY OF MORRO BAY
MORRO BAY WATER
RECLAMATION FACILITY (WRF)

OPERATIONS BUILDING
ARCHITECTURAL
BUILDING ELEVATIONS

DESIGNED: BDF
DETAILED: ANH
CHECKED: -
APPROVED: -
DATE:

0 1/2 1
IF THIS BAR DOES NOT MEASURE 1" THEN DRAWING IS NOT TO FULL SCALE

PROJECT NO.
400530

95-A-201
SHEET
OF

PLOTTED: 7/29/2019 8:49:19 PM
D400530

SOUTH ELEVATION

3/16" = 1'-0"

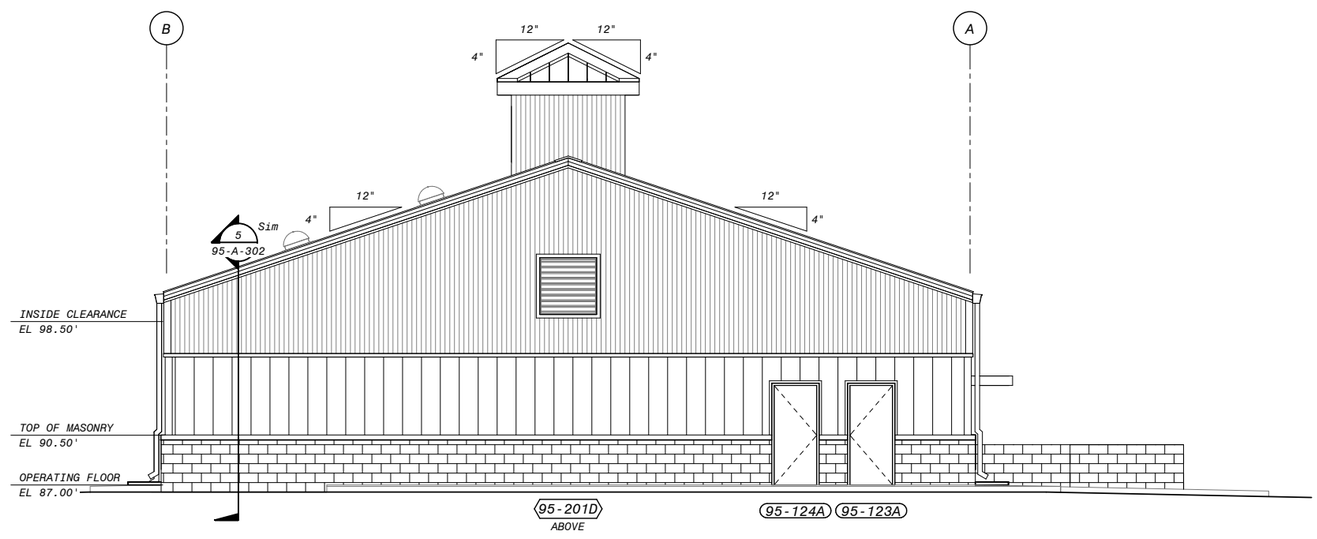


WEST ELEVATION

3/16" = 1'-0"

GENERAL SHEET NOTES

SHEET KEYNOTES

| NO. | BY | CHK | APP |
|---|---|---|---|
| B | EVB | BDF | EVB |

60% SUBMITTAL

REVISIONS AND RECORD OF USE

DATE 7/30/2019

FRASER SEIPLE ARCHITECTS

JOINT VENTURE

FILANC®

BLACK & VEATCH

CITY OF MORRO BAY
MORRO BAY WATER
RECLAMATION FACILITY (WRF)

OPERATIONS BUILDING
ARCHITECTURAL
BUILDING ELEVATIONS

DESIGNED: BDF
DETAILED: ANH
CHECKED: -
APPROVED: -
DATE:

0 1/2 1

IF THIS BAR DOES NOT MEASURE 1" THEN DRAWING IS NOT TO FULL SCALE

6" 4' 2' 0' 5' 10'

3/16" = 1'-0"

PROJECT NO.
400530

95-A-202

SHEET
OF

COASTAL DEVELOPMENT PERMIT PLANS

PLOTTED: 7/29/2019 8:49:21 PM

D400530

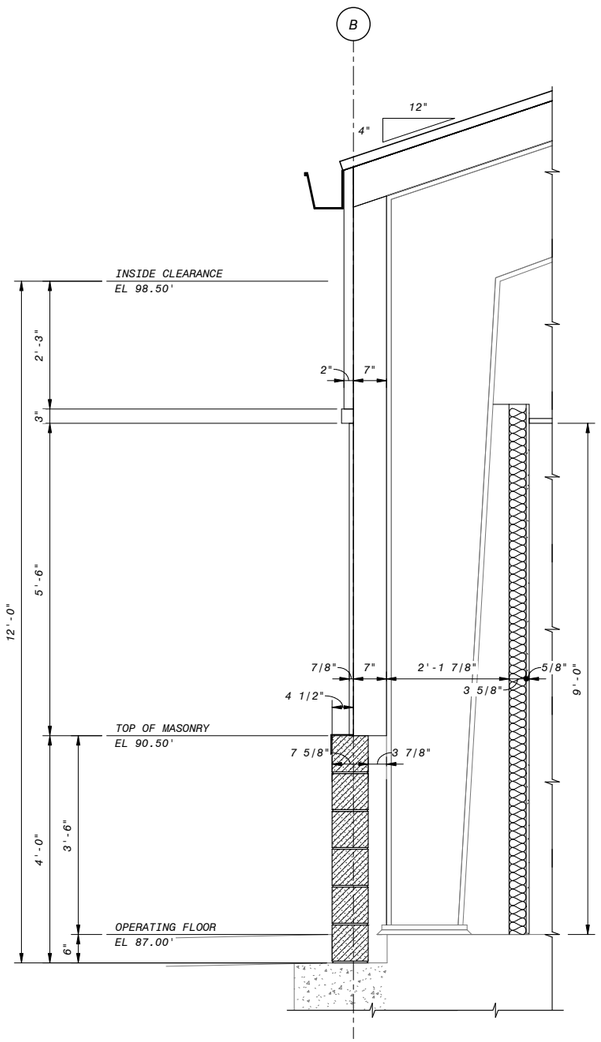


1 SECTION
95-A-102 3/4" = 1'-0"

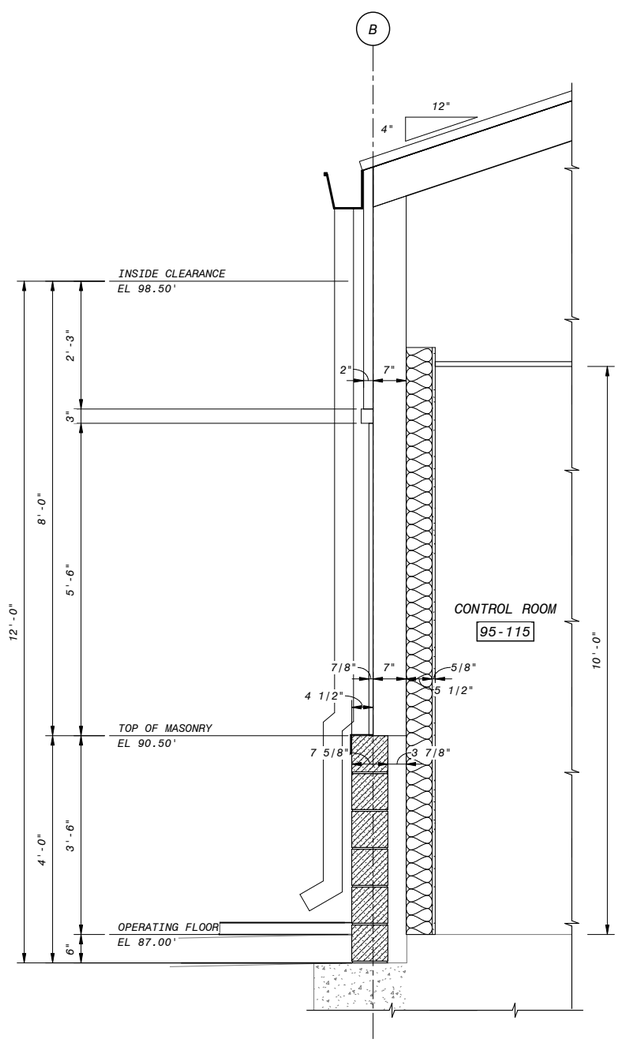


2 SECTION
95-A-102 3/4" = 1'-0"

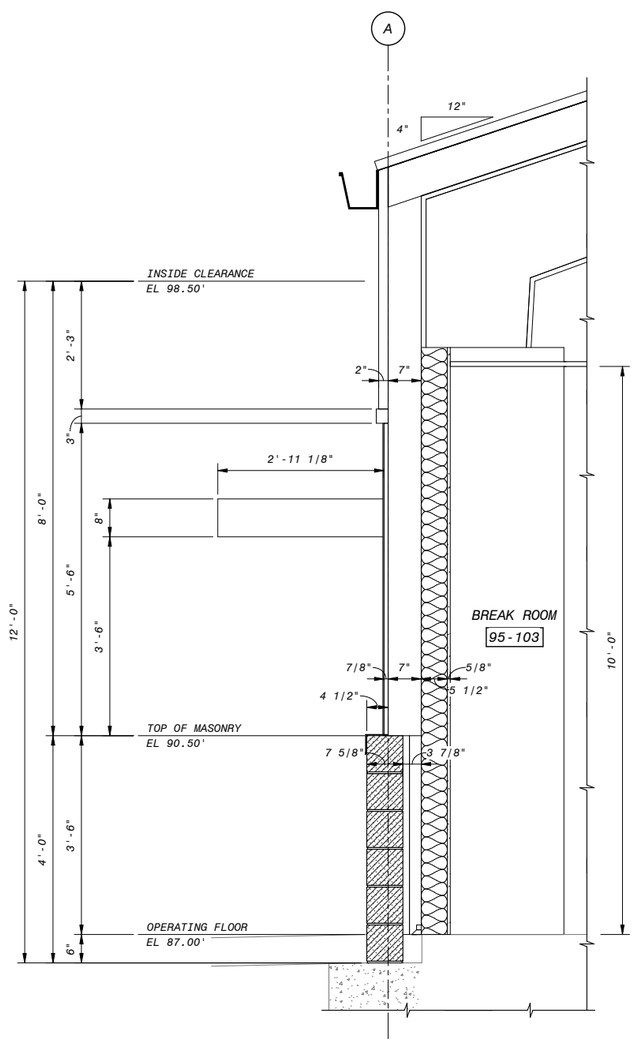


3 SECTION
95-A-102 3/4" = 1'-0"

## GENERAL SHEET NOTES

1. FOR VERTICAL REINFORCING AND BOND BEAMS IN MASONRY DESIGN - SEE STRUCTURAL DRAWINGS
2. FOR HORIZONTAL JOINT REINFORCING - SEE SPECIFICATION SECTION 04200

## SHEET KEYNOTES

12" 6" 0' 1' 2' 3'
3/4" = 1'-0"

# COASTAL DEVELOPMENT PERMIT PLANS

| NO. | BY | CHK | APP |
|---|---|---|---|
| B | EVB | BDF | EVB |

| DATE | REVISIONS AND RECORD OF USE |
|---|---|
| 7/30/2019 | 60% SUBMITTAL |

FRASER SEIPLE ARCHITECTS

JOINT VENTURE

FILANC® BLACK & VEATCH

CITY OF MORRO BAY
MORRO BAY WATER
RECLAMATION FACILITY (WRF)

OPERATIONS BUILDING
ARCHITECTURAL
WALL SECTIONS

DESIGNED: BDF
DETAILED: ANH
CHECKED: -
APPROVED: -
DATE:

0 1/2 1
IF THIS BAR DOES NOT MEASURE 1" THEN DRAWING IS NOT TO FULL SCALE

PROJECT NO.
400530

95-A-301
SHEET
OF

PLOTTED: 7/29/2019 8:49:23 PM
D400530

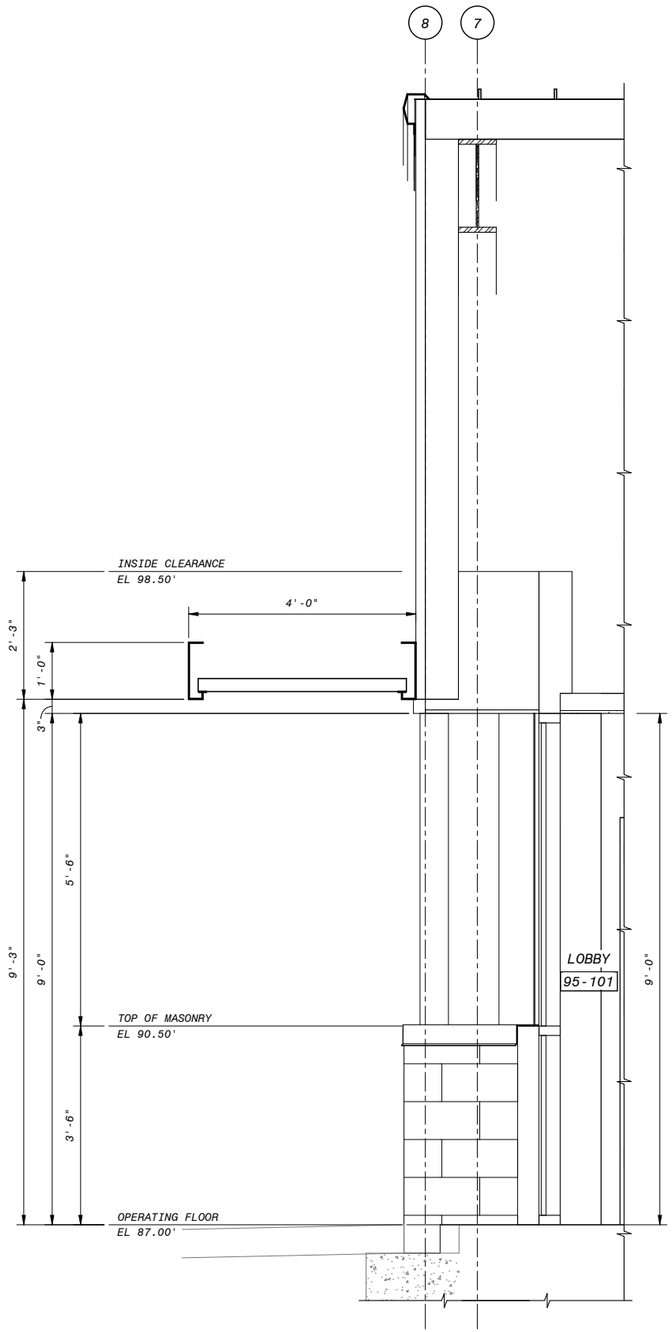


4 SECTION
95-A-102 3/4" = 1'-0"

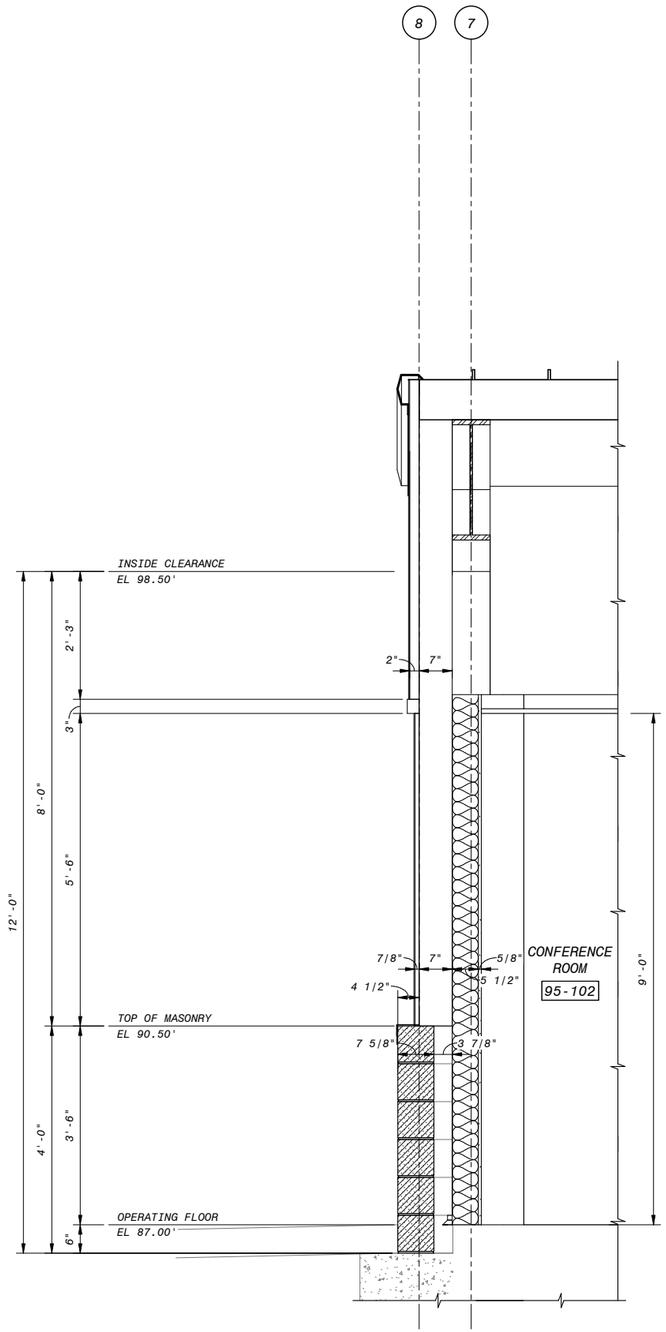


5 SECTION
95-A-102 3/4" = 1'-0"

## GENERAL SHEET NOTES

1. FOR VERTICAL REINFORCING AND BOND BEAMS IN MASONRY DESIGN - SEE STRUCTURAL DRAWINGS
2. FOR HORIZONTAL JOINT REINFORCING - SEE SPECIFICATION SECTION 04200

## SHEET KEYNOTES

12" 6" 0' 1' 2' 3'
3/4" = 1'-0"

COASTAL DEVELOPMENT PERMIT PLANS

| NO. | BY | CHK | APP |
|---|---|---|---|
| B | EVB | BDF | EVB |

| DATE | REVISIONS AND RECORD OF USE |
|---|---|
| 7/30/2019 | 60% SUBMITTAL |

FRASER SEIPLE ARCHITECTS

JOINT VENTURE

FILANC® BLACK & VEATCH

CITY OF MORRO BAY
MORRO BAY WATER
RECLAMATION FACILITY (WRF)

OPERATIONS BUILDING
ARCHITECTURAL
WALL SECTIONS

DESIGNED: BDF
DETAILED: ANH
CHECKED: -
APPROVED: -
DATE:

0 1/2 1
IF THIS BAR DOES NOT MEASURE 1" THEN DRAWING IS NOT TO FULL SCALE

PROJECT NO.
400530

95-A-302
SHEET
OF

PLOTTED: 7/29/2019 8:49:24 PM
D400530

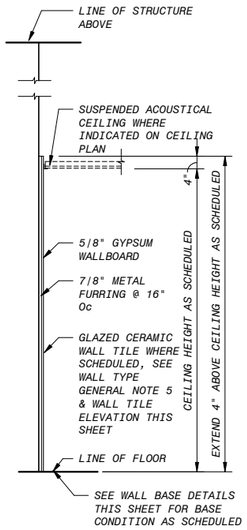


A WALL TYPE

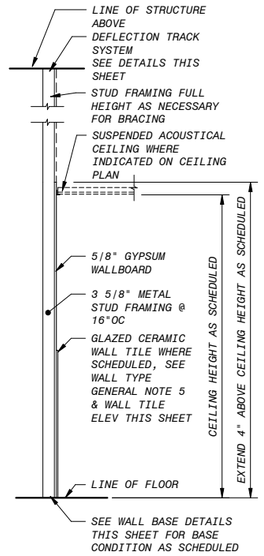


B WALL TYPE

B1 EXTEND FULL HEIGHT TO UNDERSIDE OF STRUCTURE

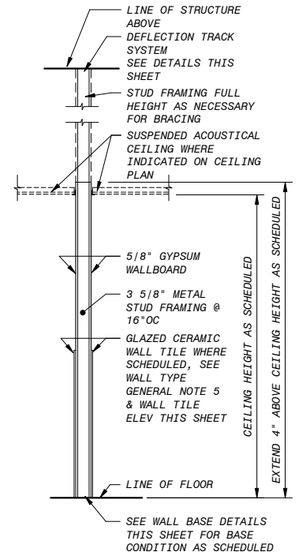


C WALL TYPE

C1 EXTEND STUD FRAMING & GWB BOTH SIDES FULL HEIGHT TO UNDERSIDE OF STRUCTURE

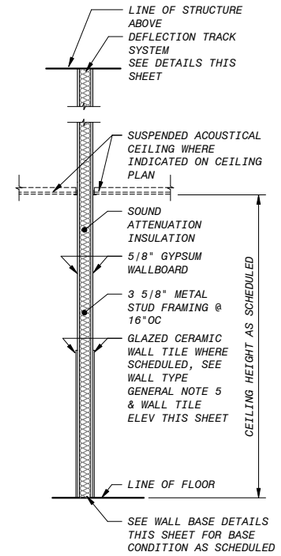


D WALL TYPE

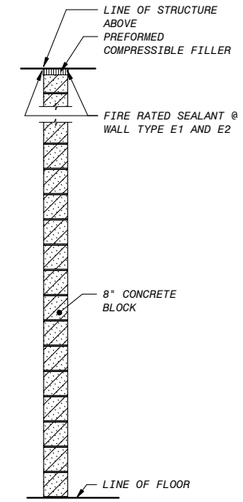


E WALL TYPE

E1 1 HOUR FIRE RATED CONSTRUCTION

E2 2 HOUR FIRE RATED CONSTRUCTION

1 WALL TYPES

1/2" = 1'-0"

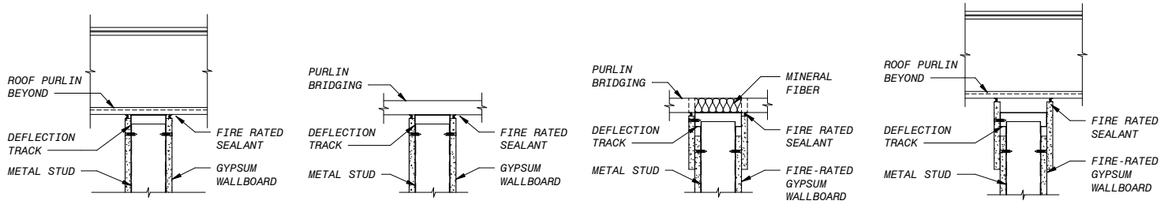


2 DEFLECTION TRACK SYSTEM

1 1/2" = 1'-0"

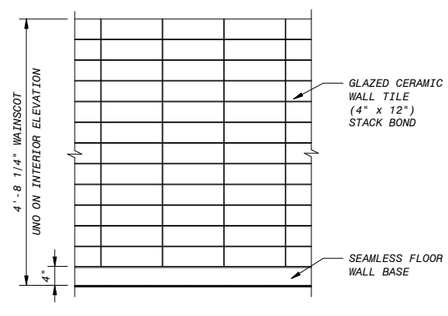


4 WALL TILE ELEVATION

3/4" = 1'-0"

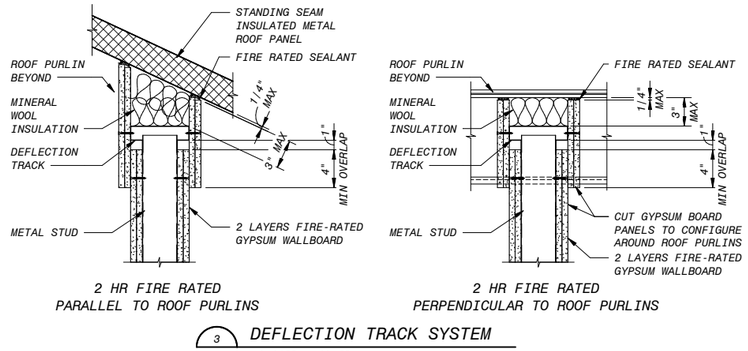


3 DEFLECTION TRACK SYSTEM

1 1/2" = 1'-0"

## GENERAL SHEET NOTES

## WALL TYPES NOTES

1. SEE ROOM FINISH SCHEDULE FOR WALL FINISHES AND CEILING HEIGHTS.
2. SEE FLOOR PLANS FOR FIRE RATED WALL LOCATIONS AND HOURLY RATED REQUIREMENTS.
3. PROVIDE ACOUSTICAL SEALANT AT WALL TYPES INDICATED TO RECEIVE SOUND ATTENUATION INSULATION.
4. PROVIDE FIRE STOPPING AND FIRE RATED SEALANT AS REQUIRED FOR ASSEMBLY INDICATED AT FIRE RATED WALLS.
5. PROVIDE CEMENT BACKER BOARD WHERE INDICATED IN LIEU OF GYPSUM WALLBOARD WHERE WALL IS SCHEDULED TO RECEIVE CERAMIC TILE FINISH, UNLESS NOTED OTHERWISE FOR SPECIFIC WALL TYPE.
6. SEE STRUCTURAL DRAWINGS FOR TOP AND BOTTOM OF WALL CONDITIONS.
7. SEE SPECIFICATION SECTION 04200 FOR JOINT REINFORCING.
8. SEE STRUCTURAL DRAWINGS FOR TOP AND BOTTOM OF WALL CONDITION AT CMU WALLS.

12" 9" 6" 3" 0" 1'
1 1/2" = 1'-0"

12" 6" 0' 1' 2' 3'
3/4" = 1'-0"

12' 6' 0' 1' 2' 3' 4' 5'
1/2" = 1'-0"

| NO. | BY | CHK | APP |
|---|---|---|---|
| B | EVB | BDF | EVB |

60% SUBMITTAL
REVISIONS AND RECORD OF USE
7/30/2019
DATE

FRASER SEIPLE ARCHITECTS

JOINT VENTURE

FILANC

BLACK & VEATCH

CITY OF MORRO BAY
MORRO BAY WATER
RECLAMATION FACILITY (WRF)

OPERATIONS BUILDING
ARCHITECTURAL
WALL TYPES AND CONNECTION DETAILS

DESIGNED: BDF
DETAILED: ANH
CHECKED: -
APPROVED: -
DATE:

0 1/2 1
IF THIS BAR DOES NOT MEASURE 1" THEN DRAWING IS NOT TO FULL SCALE

PROJECT NO.
400530

95-A-303
SHEET
OF

COASTAL DEVELOPMENT PERMIT PLANS

PLOTTED: 7/29/2019 8:49:25 PM
D400530

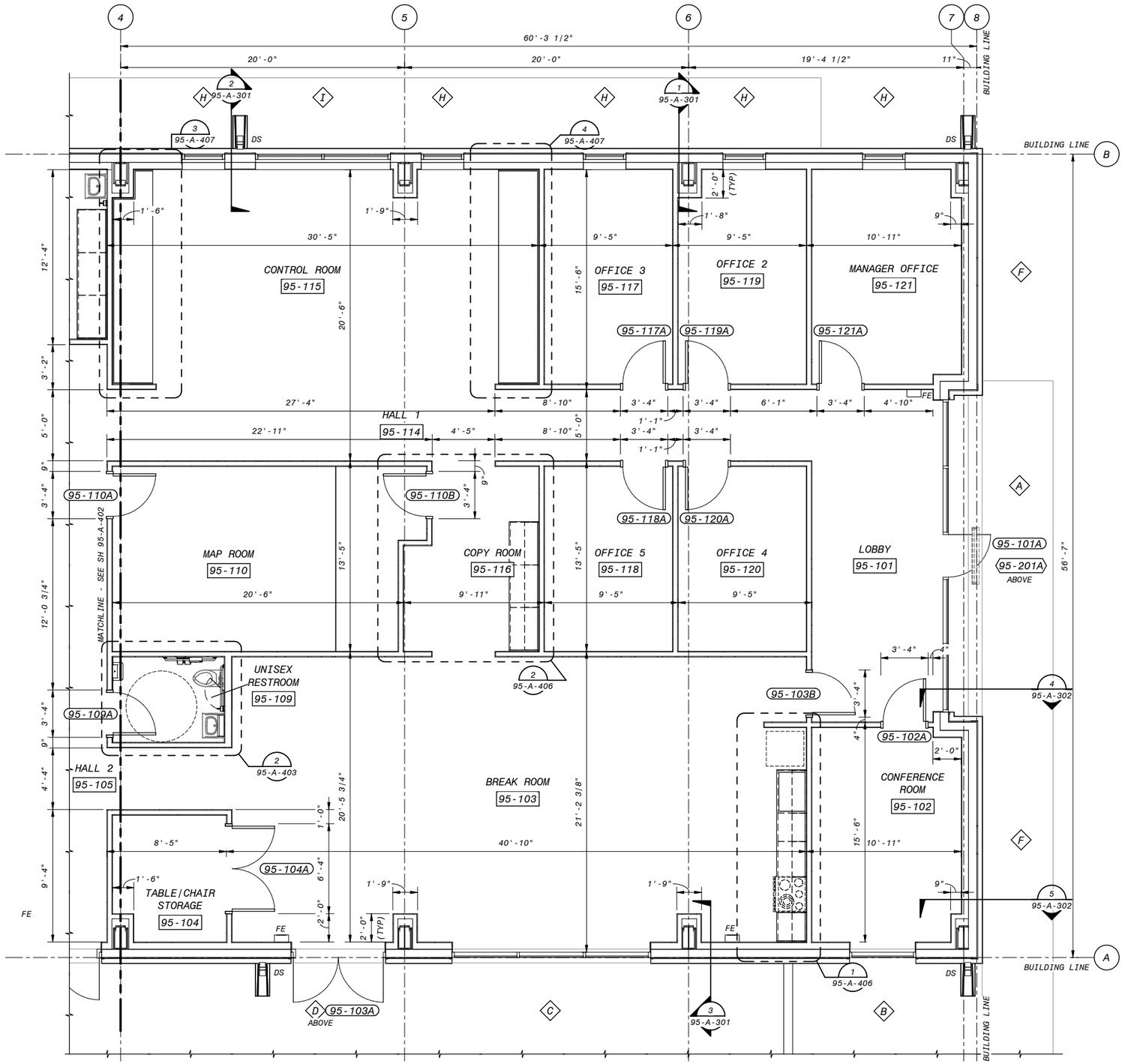


1 OPERATING FLOOR - EAST PLAN
95-A-102 1/4" = 1'-0"

GENERAL SHEET NOTES

SHEET KEYNOTES

| NO. | BY | CHK | APP |
|---|---|---|---|
| B | EVB | BDF | EVB |

60% SUBMITTAL
REVISIONS AND RECORD OF USE
DATE 7/30/2019

FRASER SEIPLE ARCHITECTS
JOINT VENTURE
FILANC
BLACK & VEATCH

CITY OF MORRO BAY
MORRO BAY WATER
RECLAMATION FACILITY (WRF)

OPERATIONS BUILDING
ARCHITECTURAL
ENLARGED OPERATING FLOOR PLAN - EAST

DESIGNED: BDF
DETAILED: ANH
CHECKED: -
APPROVED: -
DATE:

0 1/2 1
IF THIS BAR DOES NOT MEASURE 1" THEN DRAWING IS NOT TO FULL SCALE

PROJECT NO.
400530

95-A-401
SHEET
OF

4' 2' 0' 4' 8'
1/4" = 1'-0"

COASTAL DEVELOPMENT PERMIT PLANS

PLOTTED: 7/29/2019 8:49:27 PM
D400530

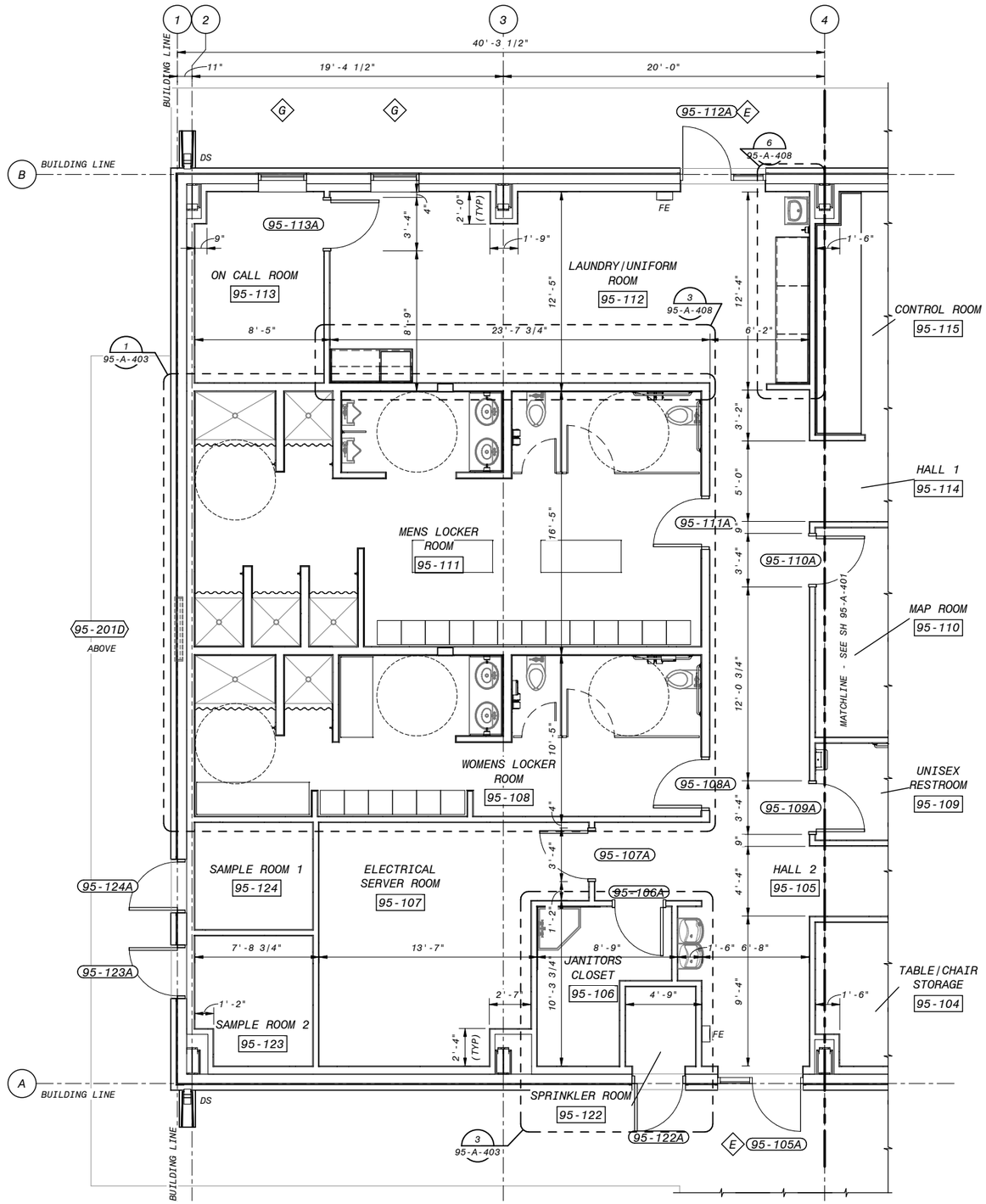


1 OPERATING FLOOR - WEST PLAN
95-A-102 1/4" = 1'-0"

GENERAL SHEET NOTES

SHEET KEYNOTES

4' 2' 0' 4' 8'
1/4" = 1'-0"

COASTAL DEVELOPMENT PERMIT PLANS

| NO. | BY | CHK | APP |
|---|---|---|---|
| B | EVB | BDF | EVB |

60% SUBMITTAL
REVISIONS AND RECORD OF USE
DATE 7/30/2019

FRASER SEIPLE ARCHITECTS
JOINT VENTURE
BLACK & VEATCH
FILANC

CITY OF MORRO BAY
MORRO BAY WATER
RECLAMATION FACILITY (WRF)

OPERATIONS BUILDING
ARCHITECTURAL
ENLARGED OPERATING FLOOR PLAN - WEST

DESIGNED: BDF
DETAILED: ANH
CHECKED: -
APPROVED: -
DATE:

0 1/2 1
IF THIS BAR DOES NOT MEASURE 1" THEN DRAWING IS NOT TO FULL SCALE

PROJECT NO.
400530

95-A-402
SHEET
OF

PLOTTED: 7/29/2019 8:49:29 PM
D400530

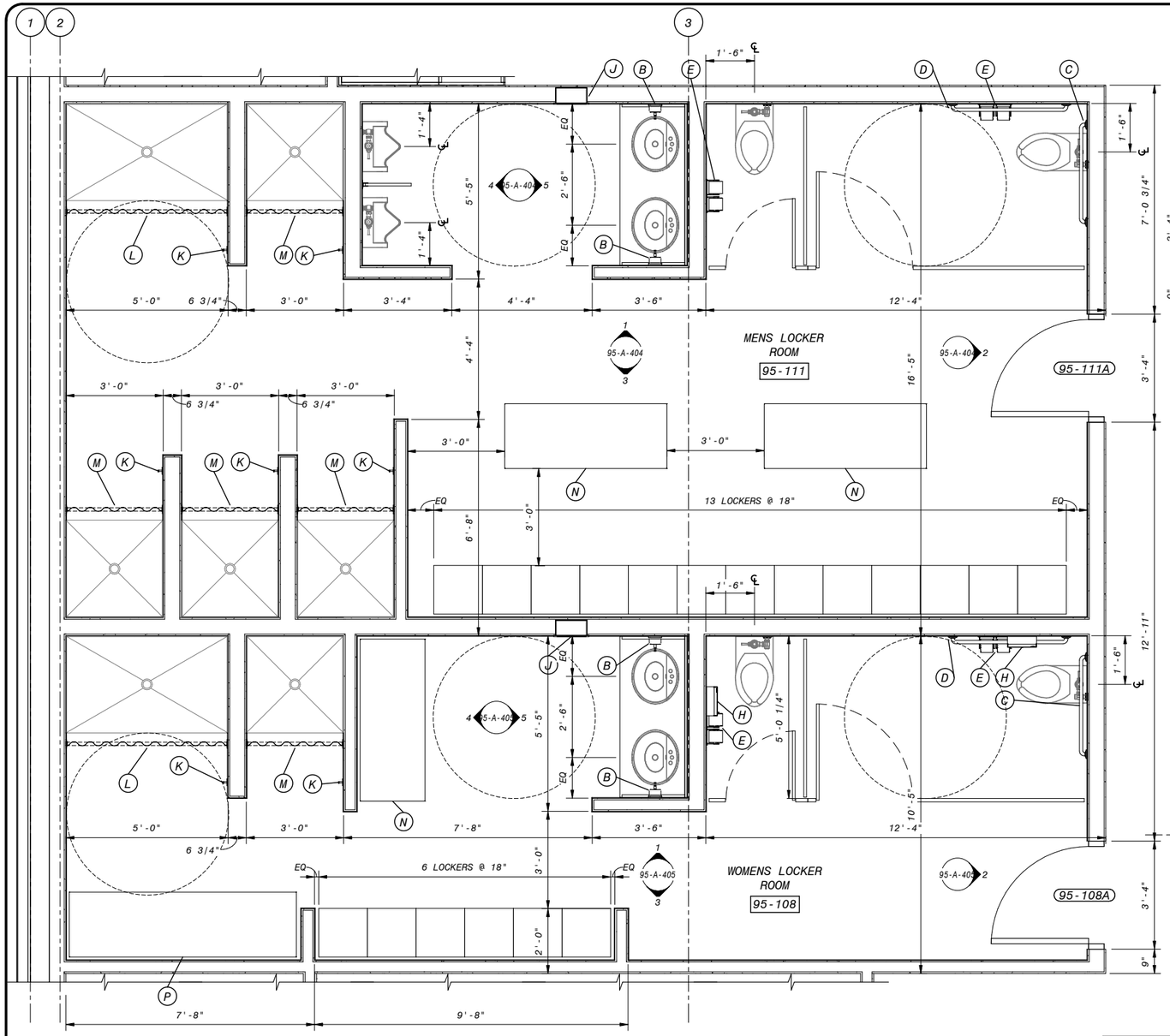


1 ENLARGED RESTROOM AND LOCKER ROOM PLAN
95-A-402 1/2" = 1'-0"

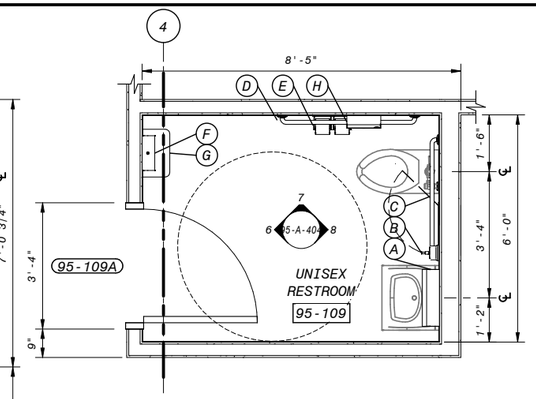


2 ENLARGED UNISEX RESTROOM PLAN
95-A-401 1/2" = 1'-0"

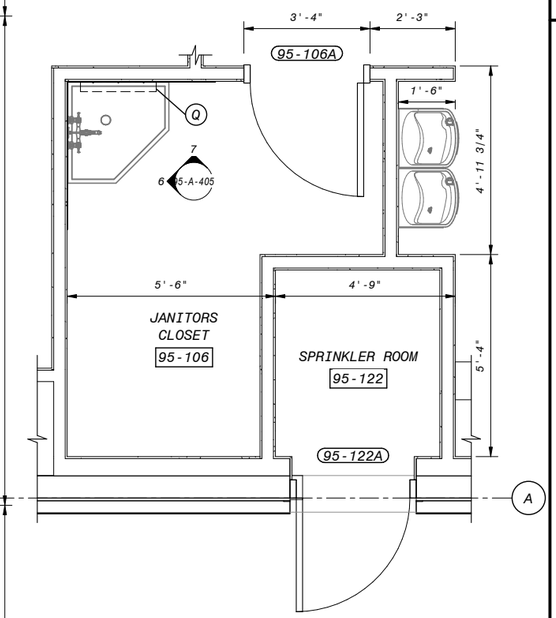


3 ENLARGED JANITORES CLOSET PLAN
95-A-402 1/2" = 1'-0"

GENERAL SHEET NOTES

SHEET KEYNOTES

## ACCESSORY SCHEDULE

| QTY | TYPE | DESCRIPTION | MOUNTING HEIGHT |
|---|---|---|---|
| 1 | A | FIXED TILT MIRROR, WITH SHELF, XX by XX inches | |
| 6 | B | SOAP DISPENSER | |
| 3 | C | 36" GRAB BAR | |
| 3 | D | 42" GRAB BAR | |
| 5 | E | TOILET TISSUE DISPENSER | |
| 1 | F | TOWEL DISPENSER | |
| 1 | G | WASTE RECEPTACLE, 18 GALLON, RECESSED | |
| 3 | H | NAPKIN DISPOSAL, 1.5 GALLONS, SURFACE-MOUNTED | |
| 2 | J | RECESSED TOWEL DISPENSER/WASTE RECEPTACLE | |
| 7 | K | SINGLE ROBE HOOK - PROJECTS 1-3/4" | |
| 2 | L | SHOWER CURTAIN ROD \| EXPOSED MOUNTING \| 1 1/4" OD \| 60" L | |
| 5 | M | SHOWER CURTAIN ROD \| EXPOSED MOUNTING \| 1 1/4" OD \| 36" L | |
| 3 | N | SOLID PLASTIC PEDESTAL BENCH - 24"x 60" | |
| 1 | P | SOLID PLASTIC PEDESTAL BENCH - 24"x 84" | |
| 1 | Q | STAINLESS STEEL MOP AND BROOM HOLDER | |

12' 6' 0' 1' 2' 3' 4' 5'
1/2" = 1'-0"

# COASTAL DEVELOPMENT PERMIT PLANS

| NO. | BY | CHK | APP |
|---|---|---|---|
| B | EVB | BDF | EVB |

60% SUBMITTAL
REVISIONS AND RECORD OF USE
DATE 7/30/2019

FRASER SEIPLE ARCHITECTS
JOINT VENTURE
BLACK & VEATCH
FILANC

CITY OF MORRO BAY
MORRO BAY WATER
RECLAMATION FACILITY (WRF)

OPERATIONS BUILDING
ARCHITECTURAL
ENLARGED RESTROOM PLANS

DESIGNED: BDF
DETAILED: ANH
CHECKED: -
APPROVED: -
DATE:

0 1/2 1
IF THIS BAR DOES NOT MEASURE 1" THEN DRAWING IS NOT TO FULL SCALE

PROJECT NO. 400530

95-A-403
SHEET
OF

PLOTTED: 7/29/2019 8:49:32 PM
D400530

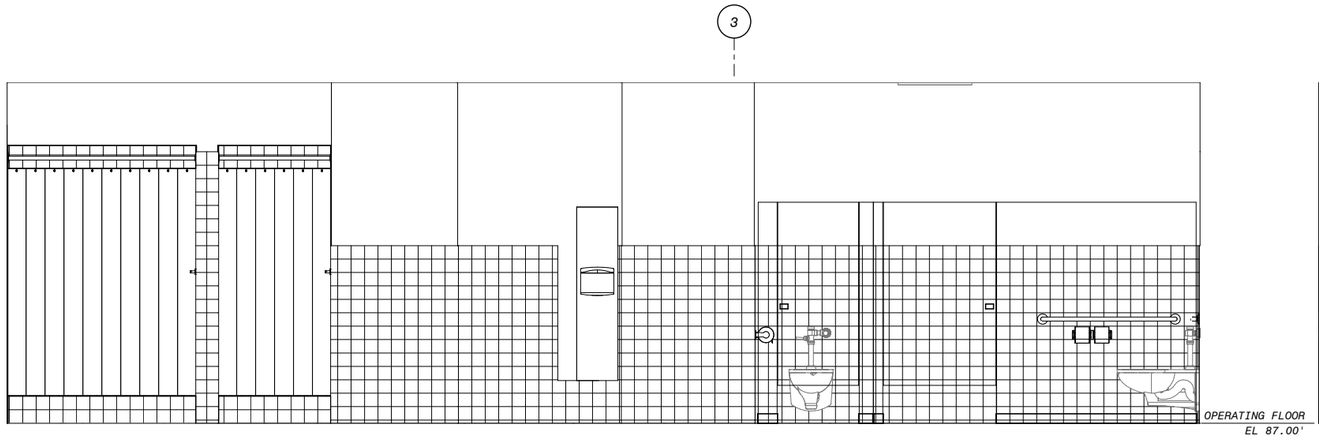


1 MENS LOCKER ROOM NORTH ELEVATION
95-A-403 1/2" = 1'-0"

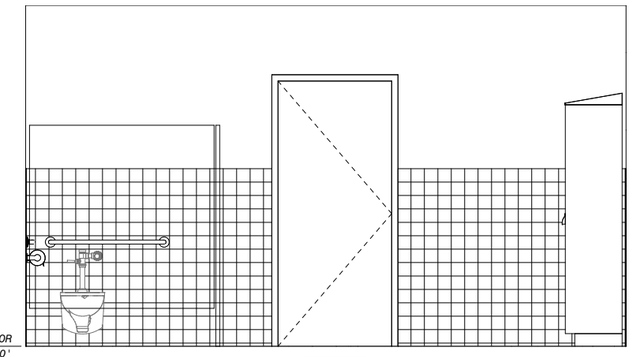


2 MENS LOCKER ROOM EAST ELEVATION
95-A-403 1/2" = 1'-0"

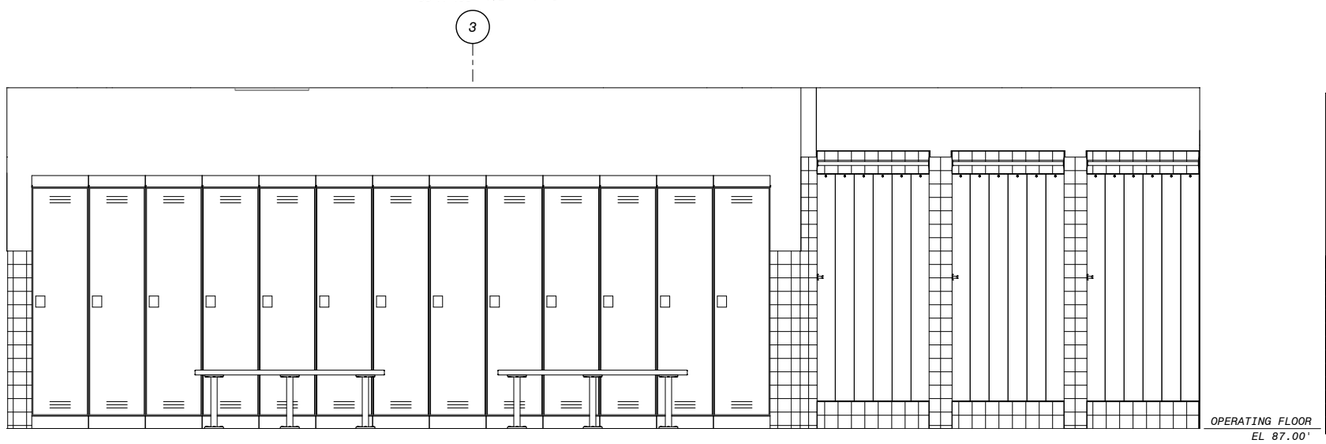


3 MENS LOCKER ROOM SOUTH ELEVATION
95-A-403 1/2" = 1'-0"

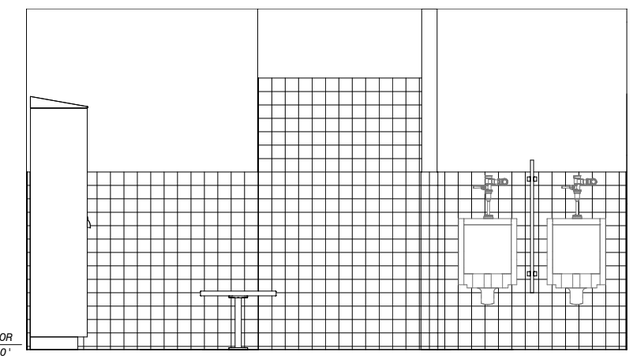

4 MENS LOCKERROOM WEST ELEVATION
95-A-403 1/2" = 1'-0"

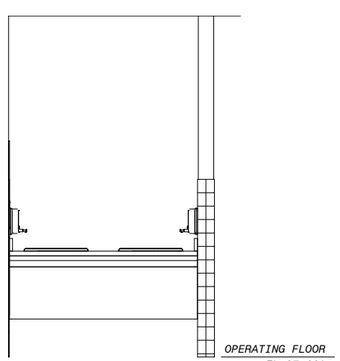


5 MENS LOCKER ROOM EAST ELEVATION @ SINK
95-A-403 1/2" = 1'-0"

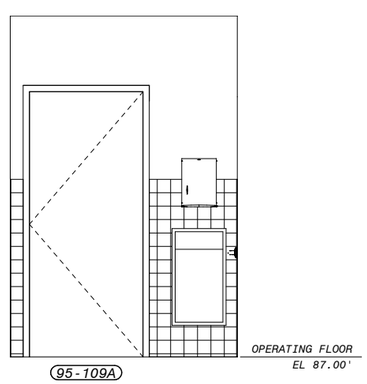


6 UNISEX RESTROOM WEST ELEVATION
95-A-403 1/2" = 1'-0"

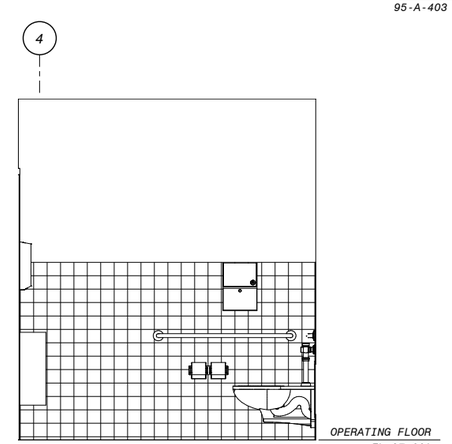


7 UNISEX RESTROOM NORTH ELEVATION
95-A-102 1/2" = 1'-0"

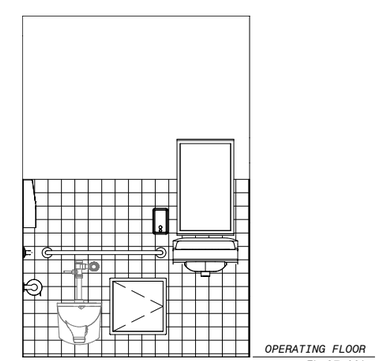


8 UNISEX RESTROOM EAST ELEVATION
95-A-403 1/2" = 1'-0"

12' 6' 0' 1' 2' 3' 4' 5'
1/2" = 1'-0"

# COASTAL DEVELOPMENT PERMIT PLANS

| NO. | BY | CHK | APP |
|---|---|---|---|
| B | EVB | BDF | EVB |

60% SUBMITTAL
REVISIONS AND RECORD OF USE
7/30/2019 DATE

FRASER SEIPLE ARCHITECTS
JOINT VENTURE
FILANC
BLACK & VEATCH

CITY OF MORRO BAY
MORRO BAY WATER
RECLAMATION FACILITY (WRF)

OPERATIONS BUILDING
ARCHITECTURAL
RESTOOM AND LOCKER ROOM ELEVATIONS

DESIGNED: BDF
DETAILED: ANH
CHECKED: -
APPROVED: -
DATE:

0 1/2 1
IF THIS BAR DOES NOT MEASURE 1" THEN DRAWING IS NOT TO FULL SCALE

PROJECT NO.
400530

95-A-404
SHEET
OF

PLOTTED: 7/29/2019 8:49:37 PM
D400530

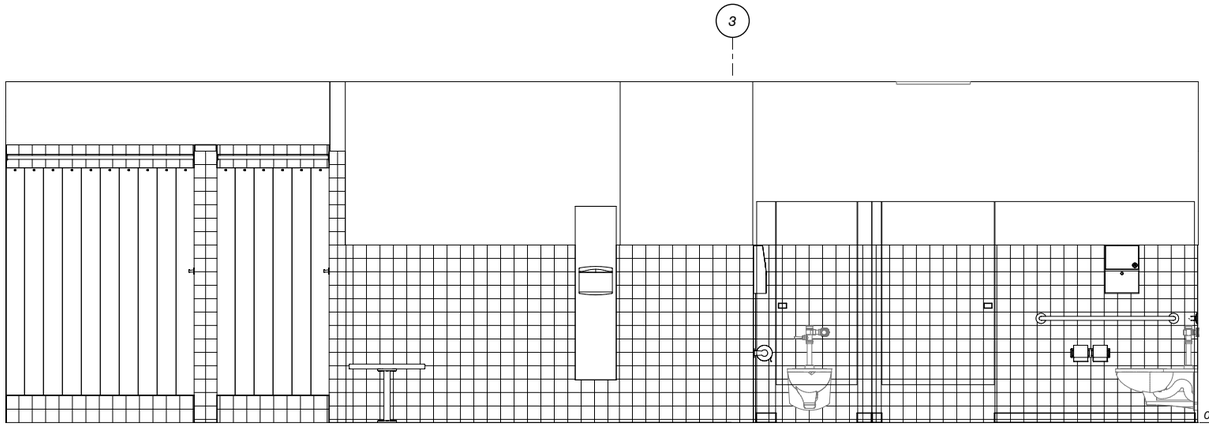


1 WOMENS LOCKER ROOM NORTH ELEVATION
95-A-403 1/2" = 1'-0"

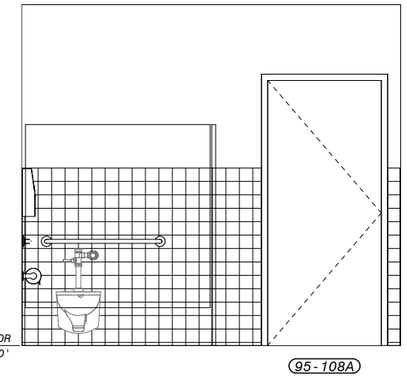


2 WOMENS LOCKER ROOM EAST ELEVATION
95-A-403 1/2" = 1'-0"

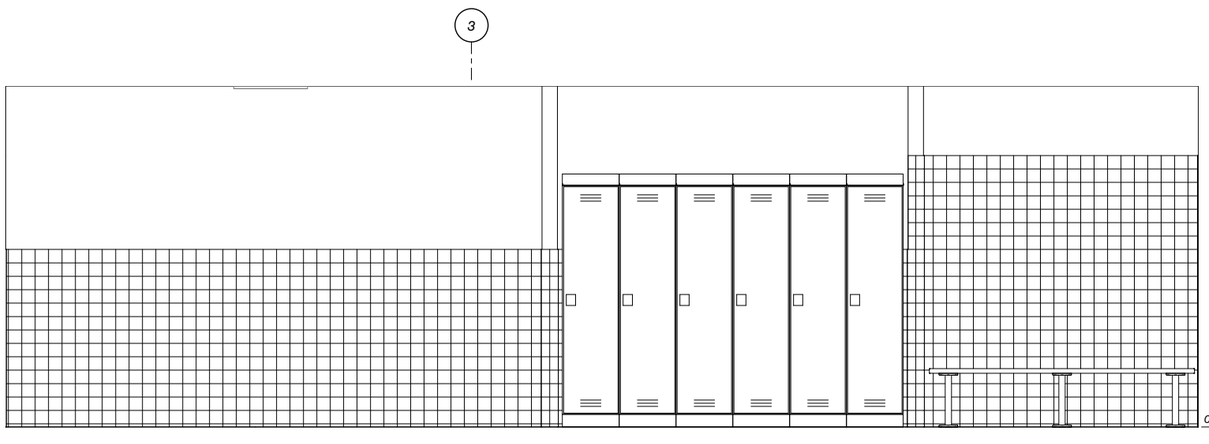


3 WOMENS LOCKER ROOM SOUTH ELEVATION
95-A-403 1/2" = 1'-0"

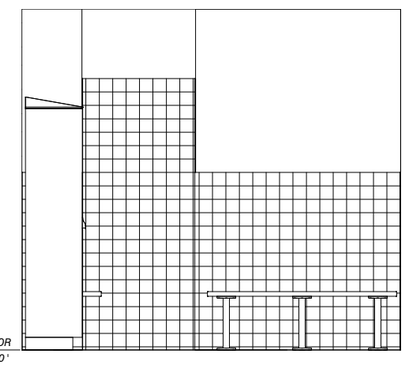

4 WOMENS LOCKERROOM WEST ELEVATION
95-A-403 1/2" = 1'-0"

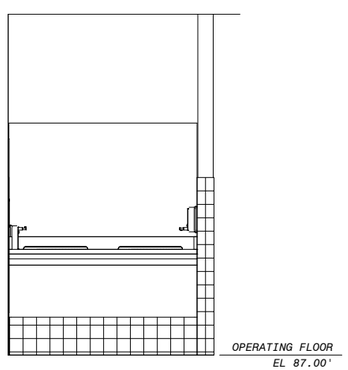


5 WOMENS LOCKER ROOM EAST ELEVATION @ SINK
95-A-403 1/2" = 1'-0"

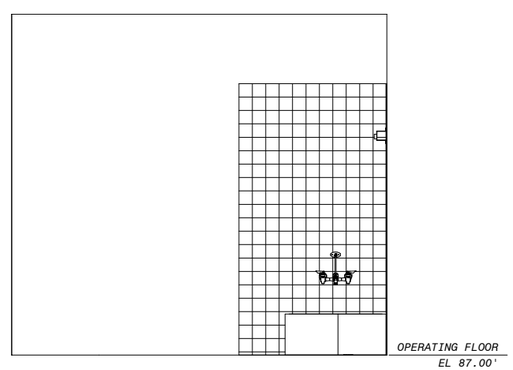


6 JANITORS CLOSET ELEVATION - WEST
95-A-403 1/2" = 1'-0"

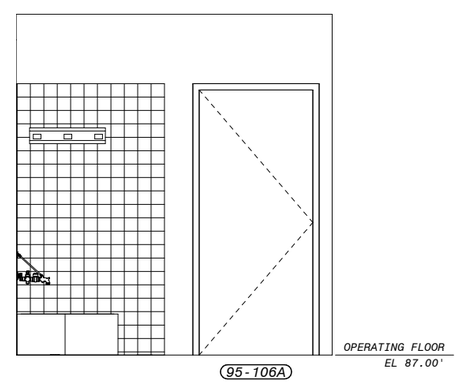


7 JANITORS CLOSET ELEVATION - NORTH
95-A-403 1/2" = 1'-0"

12' 6' 0' 1' 2' 3' 4' 5'
1/2" = 1'-0"

GENERAL SHEET NOTES

SHEET KEYNOTES

| NO. | BY | CHK | APP |
|---|---|---|---|
| B | EVB | BDF | EVB |

60% SUBMITTAL
REVISIONS AND RECORD OF USE
7/30/2019
DATE

FRASER SEIPLE ARCHITECTS
JOINT VENTURE
FILANC
BLACK & VEATCH

CITY OF MORRO BAY
MORRO BAY WATER
RECLAMATION FACILITY (WRF)

OPERATIONS BUILDING
ARCHITECTURAL
RESTOOM AND LOCKER ROOM ELEVATIONS

DESIGNED: BDF
DETAILED: ANH
CHECKED: -
APPROVED: -
DATE:

0 1/2 1
IF THIS BAR DOES NOT MEASURE 1" THEN DRAWING IS NOT TO FULL SCALE

PROJECT NO.
400530

95-A-405
SHEET
OF

COASTAL DEVELOPMENT PERMIT PLANS

PLOTTED: 7/29/2019 8:49:40 PM
D400530

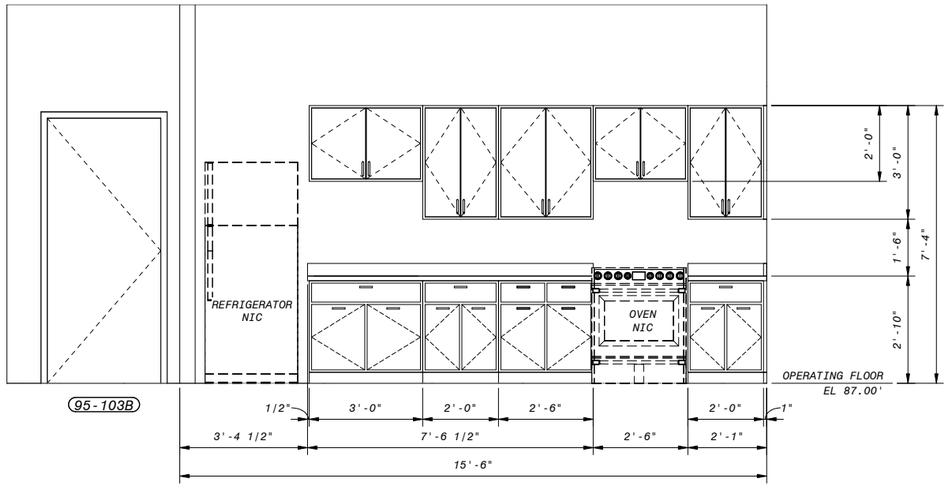


A BREAKROOM ELEVATION
95-A-406 1/2" = 1'-0"

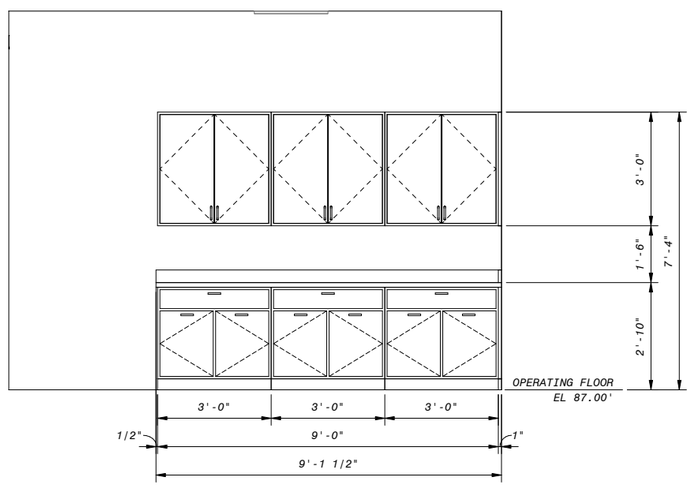


B COPY ROOM ELEVATION - EAST
95-A-406 1/2" = 1'-0"

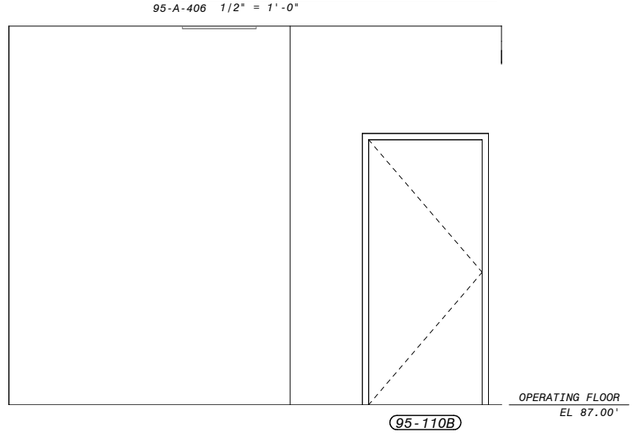


C COPY ROOM ELEVATION - WEST
95-A-406 1/2" = 1'-0"

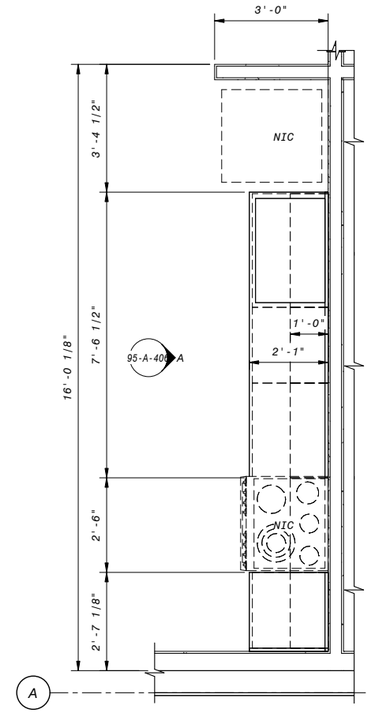


1 ENLARGED BREAKROOM PLAN
95-A-401 1/2" = 1'-0"

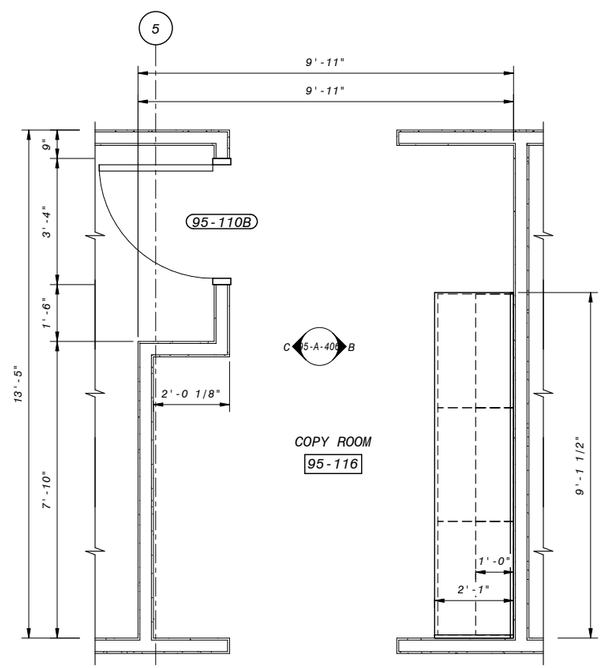


2 ENLARGED COPY ROOM PLAN
95-A-401 1/2" = 1'-0"

GENERAL SHEET NOTES

SHEET KEYNOTES

| NO. | BY | CHK | APP |
|---|---|---|---|
| B | EVB | BDF | EVB |

60% SUBMITTAL
REVISIONS AND RECORD OF USE
7/30/2019
DATE

FRASER SEIPLE ARCHITECTS
JOINT VENTURE
FILANC
BLACK & VEATCH

CITY OF MORRO BAY
MORRO BAY WATER
RECLAMATION FACILITY (WRF)

OPERATIONS BUILDING
ARCHITECTURAL
ENLARGED CASEWORK PLANS AND ELEVATIONS

DESIGNED: BDF
DETAILED: ANH
CHECKED: -
APPROVED: -
DATE:

0 1/2 1
IF THIS BAR DOES NOT MEASURE 1" THEN DRAWING IS NOT TO FULL SCALE

PROJECT NO.
400530

95-A-406
SHEET
OF

12' 6' 0' 1' 2' 3' 4' 5'
1/2" = 1'-0"

COASTAL DEVELOPMENT PERMIT PLANS

PLOTTED: 7/29/2019 8:49:41 PM
D400530

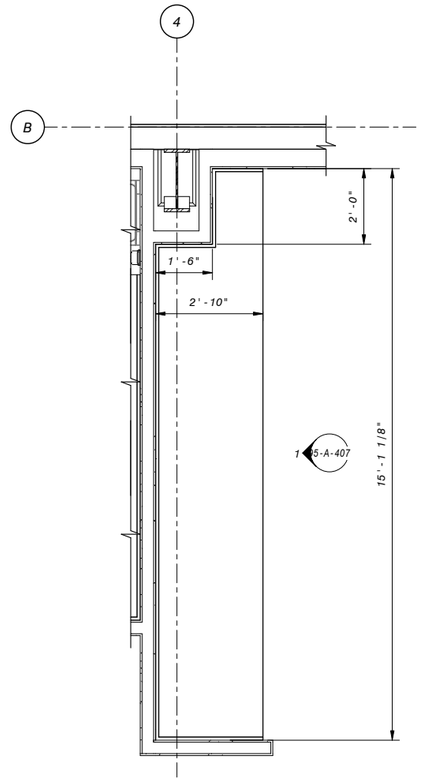


3 ENLARGED CONTROL ROOM - WEST PLAN
95-A-401 1/2" = 1'-0"

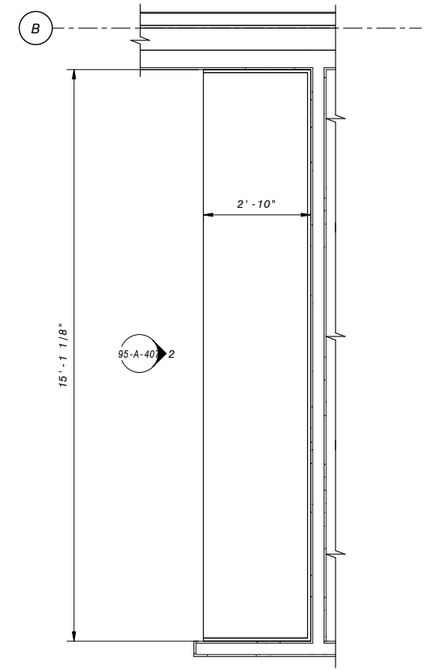


4 ENLARGED CONTROL ROOM - EAST PLAN
95-A-401 1/2" = 1'-0"

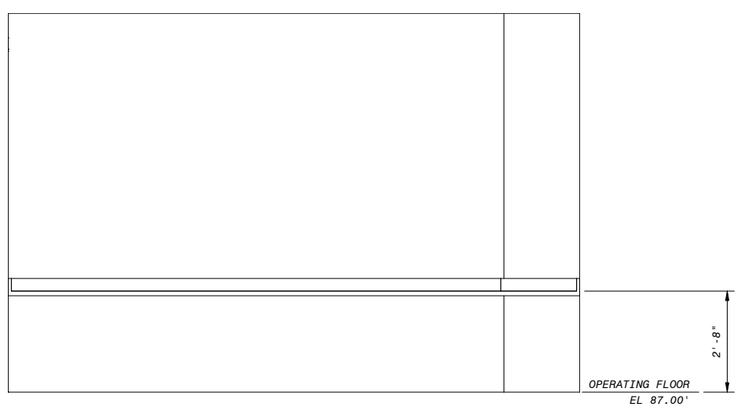


1 CONTROL ROOM ELEVATION - WEST
95-A-407 1/2" = 1'-0"

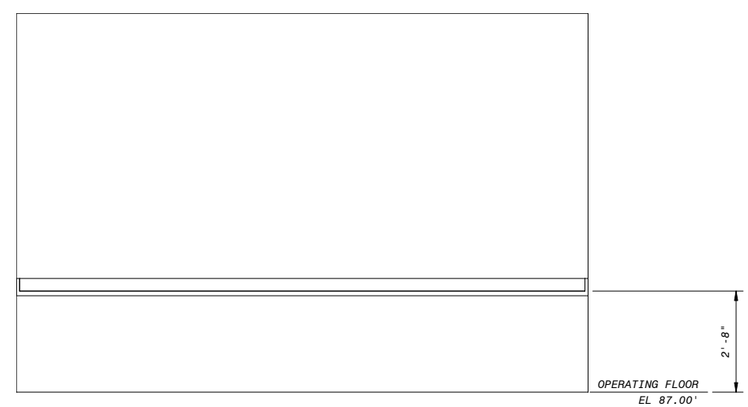


2 CONTROLE ROOM ELEVATION - EAST
95-A-407 1/2" = 1'-0"

GENERAL SHEET NOTES

SHEET KEYNOTES

12' 6' 0' 1' 2' 3' 4' 5'
1/2" = 1'-0"

COASTAL DEVELOPMENT PERMIT PLANS

| NO. | BY | CHK | APP |
|---|---|---|---|
| B | EVB | BDF | EVB |

| DATE | REVISIONS AND RECORD OF USE |
|---|---|
| 7/30/2019 | 60% SUBMITTAL |

FRASER SEIPLE ARCHITECTS
JOINT VENTURE
FILANC
BLACK & VEATCH

CITY OF MORRO BAY
MORRO BAY WATER
RECLAMATION FACILITY (WRF)

OPERATIONS BUILDING
ARCHITECTURAL
ENLARGED CASEWORK PLANS AND ELEVATIONS

DESIGNED: BDF
DETAILED: ANH
CHECKED: -
APPROVED: -
DATE:

0 1/2 1
IF THIS BAR DOES NOT MEASURE 1" THEN DRAWING IS NOT TO FULL SCALE

PROJECT NO.
400530

95-A-407
SHEET
OF

PLOTTED: 7/29/2019 8:49:43 PM
D400530

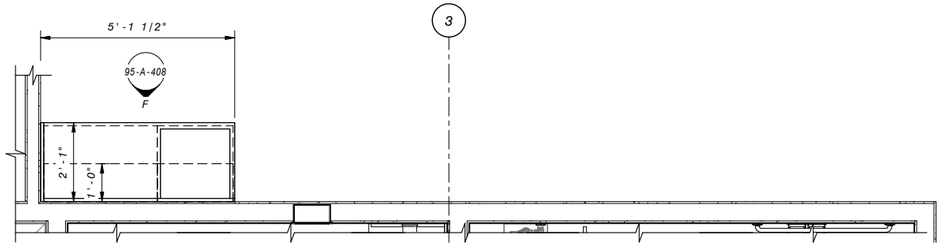


3 ENLARGED LAUNDRY/UNIFORM ROOM - SOUTH PLAN
95-A-402 1/2" = 1'-0"

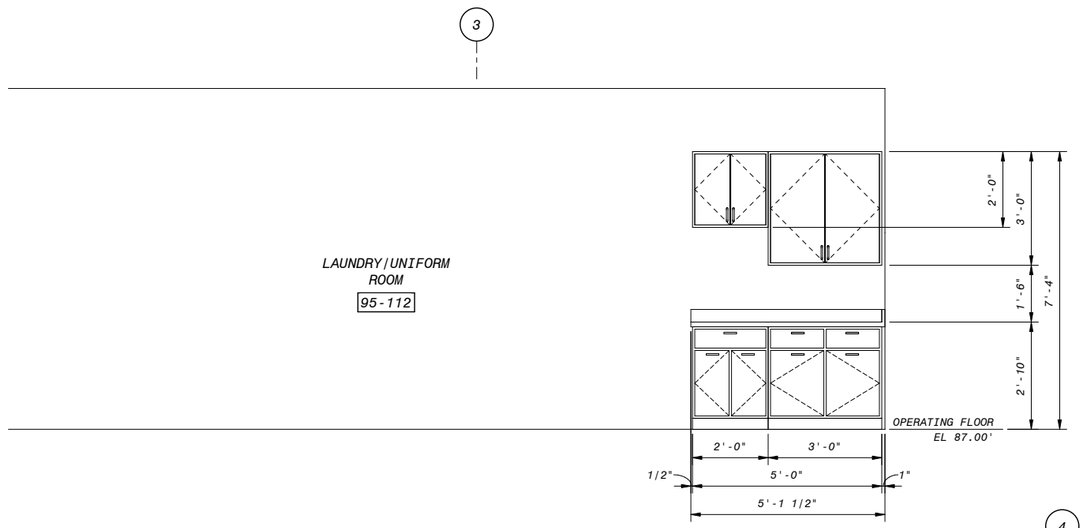


F LAUNDRY/UNIFORM ROOM - SOUTH
95-A-408 1/2" = 1'-0"

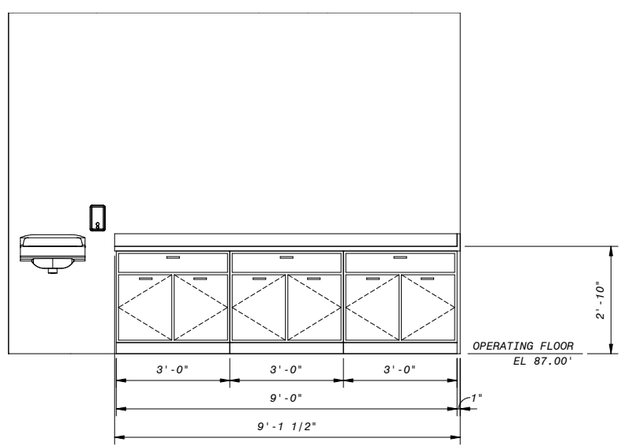


G LAUNDRY/UNIFORM ROOM - EAST
95-A-408 1/2" = 1'-0"

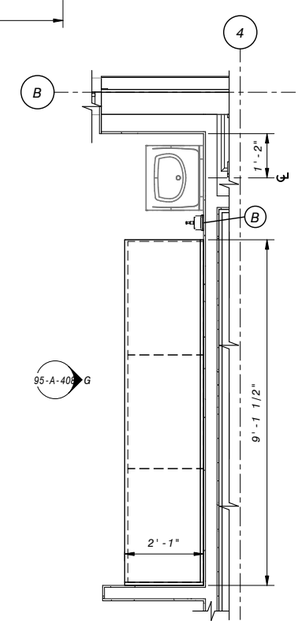


6 ENLARGED LAUNDRY/UNIFORM ROOM - EAST PLAN
95-A-402 1/2" = 1'-0"

GENERAL SHEET NOTES

SHEET KEYNOTES

12' 6' 0' 1' 2' 3' 4' 5'
1/2" = 1'-0"

COASTAL DEVELOPMENT PERMIT PLANS

| NO. | BY | CHK | APP |
|---|---|---|---|
| B | EVB | BDF | EVB |

| DATE | REVISIONS AND RECORD OF USE |
|---|---|
| 7/30/2019 | 60% SUBMITTAL |

FRASER SEIPLE ARCHITECTS
JOINT VENTURE
BLACK & VEATCH
FILANC

CITY OF MORRO BAY
MORRO BAY WATER
RECLAMATION FACILITY (WRF)

OPERATIONS BUILDING
ARCHITECTURAL
ENLARGED CASEWORK PLANS AND ELEVATIONS

DESIGNED: BDF
DETAILED: ANH
CHECKED: -
APPROVED: -
DATE:

0 1/2 1
IF THIS BAR DOES NOT MEASURE 1" THEN DRAWING IS NOT TO FULL SCALE

PROJECT NO.
400530

95-A-408
SHEET
OF

PLOTTED: 7/29/2019 8:49:44 PM
D400530

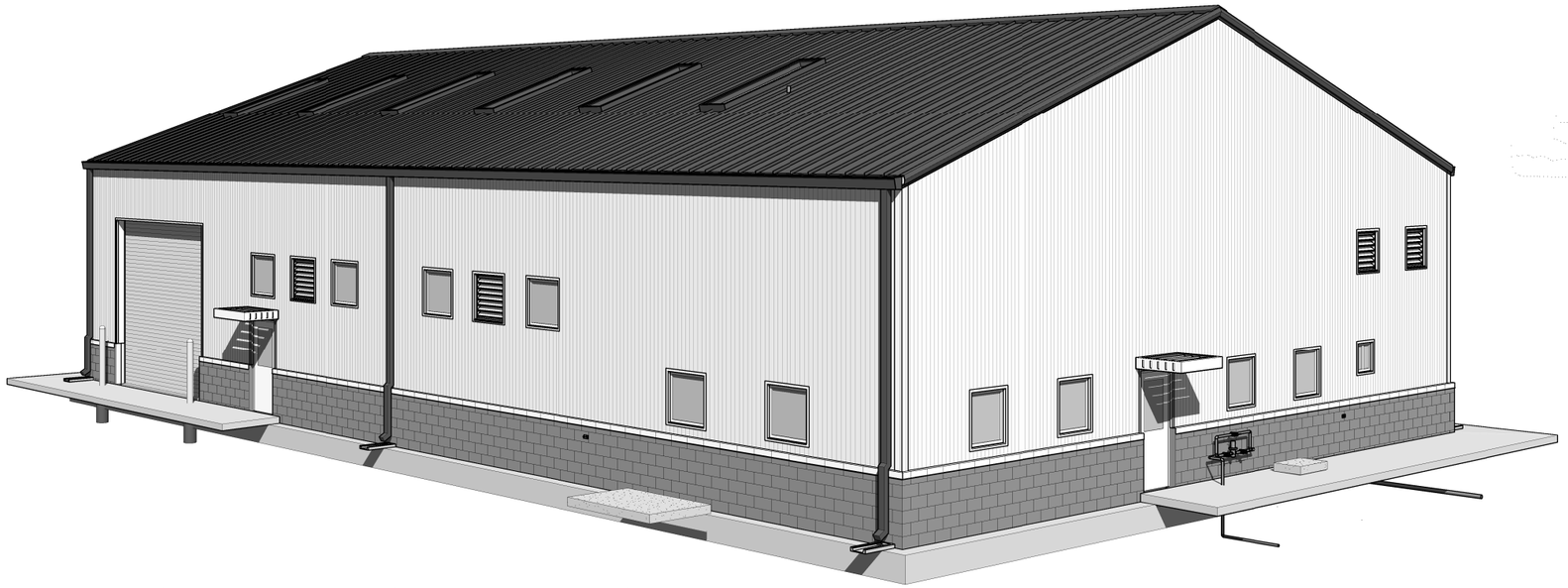

NORTHEAST PERSPECTIVE

SOUTHWEST PERSPECTIVE

COASTAL DEVELOPMENT PERMIT PLANS

| DATE | REVISIONS AND RECORD OF USE | NO. | BY | CHK | APP |
|---|---|---|---|---|---|
| 7/30/2019 | 60% SUBMITTAL | B | BDF | BDF | EVB |
| 3/5/2019 | 30% SUBMITTAL | A | BDF | BDF | EVB |

FRASER SEIPLE ARCHITECTS

JOINT VENTURE

FILANC®

BLACK & VEATCH

CITY OF MORRO BAY
MORRO BAY WATER
RECLAMATION FACILITY (WRF)

MAINTENANCE BUILDING
ARCHITECTURAL
PERSPECTIVES

DESIGNED: BDF
DETAILED: ANH
CHECKED: -
APPROVED: -
DATE:

0 1/2 1

IF THIS BAR DOES NOT MEASURE 1" THEN DRAWING IS NOT TO FULL SCALE

PROJECT NO.
400530

96-A-001
SHEET
OF

PLOTTED: 7/29/2019 8:40:24 PM
D400530

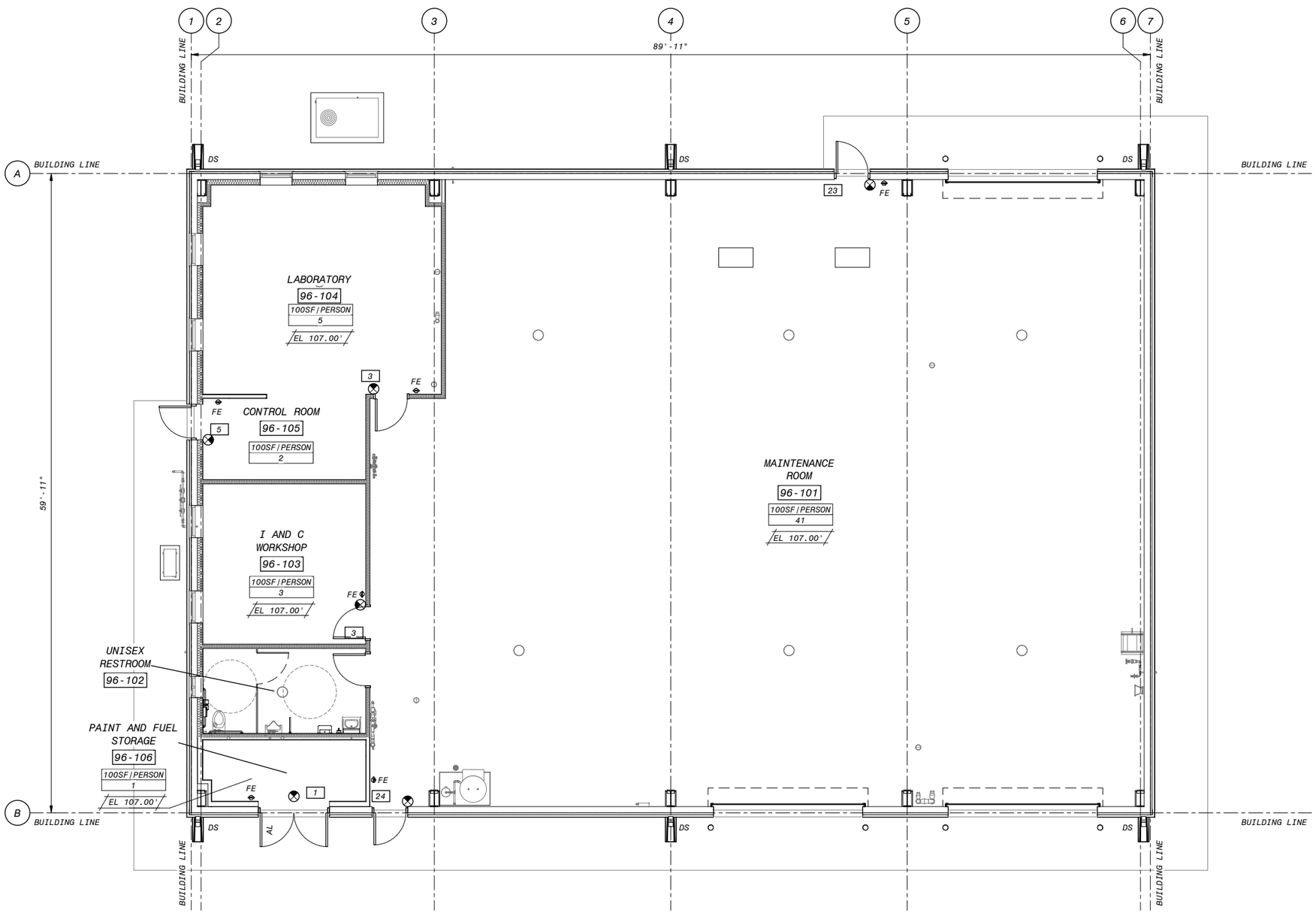


LIFE SAFETY PLAN

3/16" = 1'-0"

## GENERAL SHEET NOTES

## SHEET KEYNOTES

## LIFE SAFETY LEGEND

| | |
|---|---|
| | FIRE EXTINGUISHER (FE) |
| X'-X" | PATH OF EGRESS TRAVEL |
| 100SF/PERSON / 10 | OCCUPANTS PER SF<br>OCCUPANT LOAD |
| 1 | CUMULATIVE OCCUPANT LOAD AT EXIT |
| | EXIT SYMBOL |
| AL | ACTIVE LEAF |
| DN | DOWN |
| DS | DOWNSPOUT |

## BUILDING CODE ANALYSIS

| MAINTENANCE BUILDING | |
|---|---|
| APPLICABLE BUILDING CODES: | |
| OCCUPANCY | - |
| ACTUAL FLOOR AREA | 0,000 SF TOTAL |
| ACTUAL HEIGHT | 1 STORY (20.33 FT) |
| TYPE OF CONSTRUCTION | TYPE -- |
| ALLOWABLE AREA | 0,000 SF |
| ALLOWABLE HEIGHT | 2 STORIES (55 FT) |
| DESIGN OCCUPANT LOAD | 0 PERSONS |
| ADA ACCESSIBILITY | - |
| OCCUPANCY SEPARATION | - |
| FIRE SPRINKLERS | - |

6" 4' 2' 0' 5' 10'

3/16" = 1'-0"

# COASTAL DEVELOPMENT PERMIT PLANS

| NO. | BY | CHK | APP |
|---|---|---|---|
| B | BDF | BDF | EVB |

60% SUBMITTAL

REVISIONS AND RECORD OF USE

DATE 7/30/2019

FRASER SEIPLE ARCHITECTS

JOINT VENTURE

BLACK & VEATCH

FILANC

CITY OF MORRO BAY
MORRO BAY WATER
RECLAMATION FACILITY (WRF)

MAINTENANCE BUILDING
ARCHITECTURAL
LIFE SAFETY PLAN

DESIGNED: BDF
DETAILED: ANH
CHECKED: -
APPROVED: -
DATE:

0 1/2 1

IF THIS BAR DOES NOT MEASURE 1" THEN DRAWING IS NOT TO FULL SCALE

PROJECT NO.
400530

96-A-101
SHEET
OF

PLOTTED: 7/29/2019 8:29:44 PM

D400530

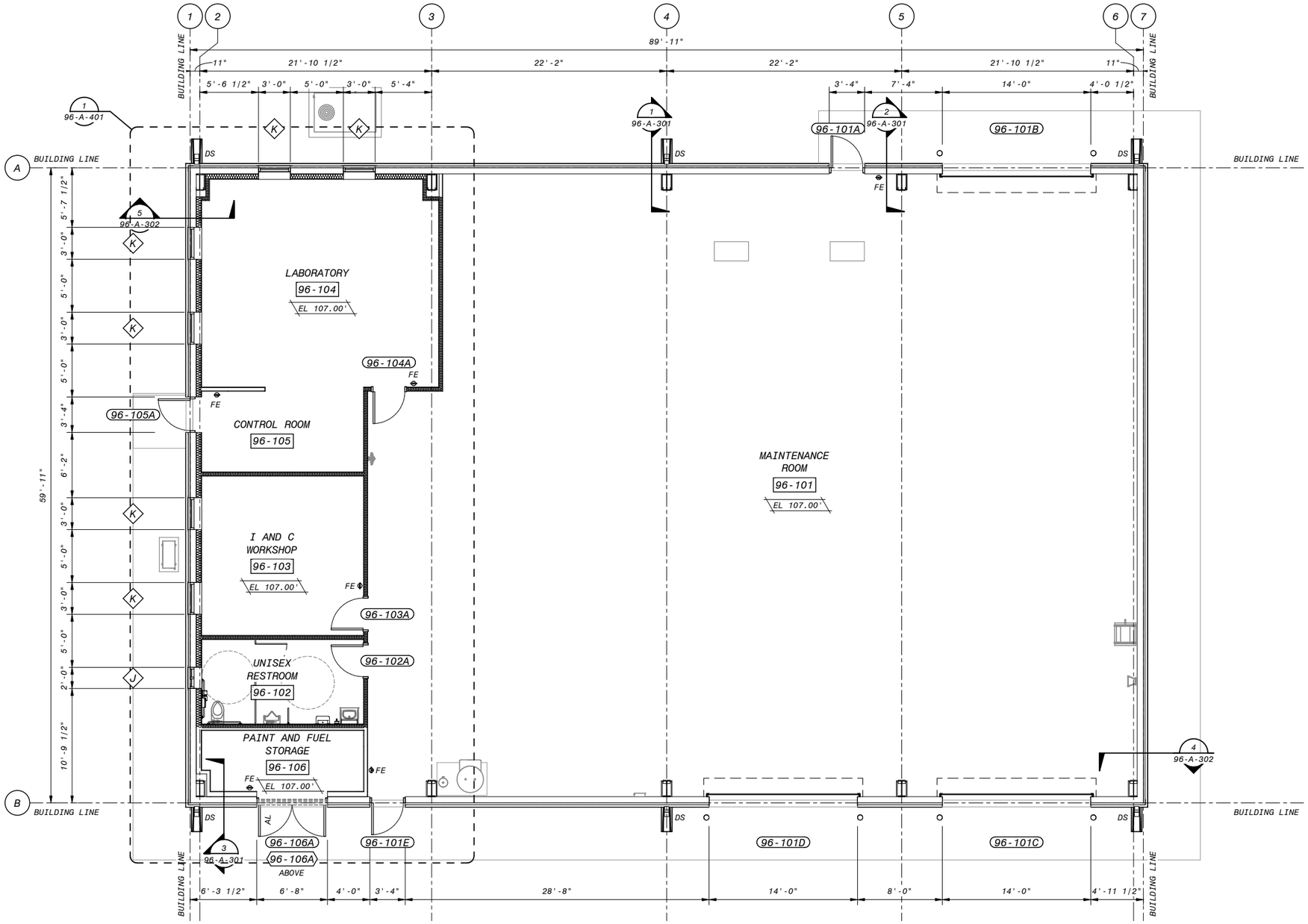


OPERATING FLOOR PLAN

3/16" = 1'-0"

GENERAL SHEET NOTES

SHEET KEYNOTES

| NO. | BY | CHK | APP | REVISIONS AND RECORD OF USE | DATE |
|---|---|---|---|---|---|
| B | BDF | BDF | EVB | 60% SUBMITTAL | 7/30/2019 |
| A | BDF | BDF | EVB | 30% SUBMITTAL | 3/5/2019 |

FRASER SEIPLE ARCHITECTS

JOINT VENTURE

FILANC

BLACK & VEATCH

CITY OF MORRO BAY
MORRO BAY WATER
RECLAMATION FACILITY (WRF)

MAINTENANCE BUILDING
ARCHITECTURAL
OPERATING FLOOR PLAN

DESIGNED: BDF
DETAILED: ANH
CHECKED: -
APPROVED: -
DATE:

0 1/2 1
IF THIS BAR DOES NOT MEASURE 1" THEN DRAWING IS NOT TO FULL SCALE

PROJECT NO.
400530

96-A-102
SHEET
OF

6" 4' 2' 0' 5' 10'
3/16" = 1'-0"

COASTAL DEVELOPMENT PERMIT PLANS

PLOTTED: 7/29/2019 8:41:27 PM
D400530

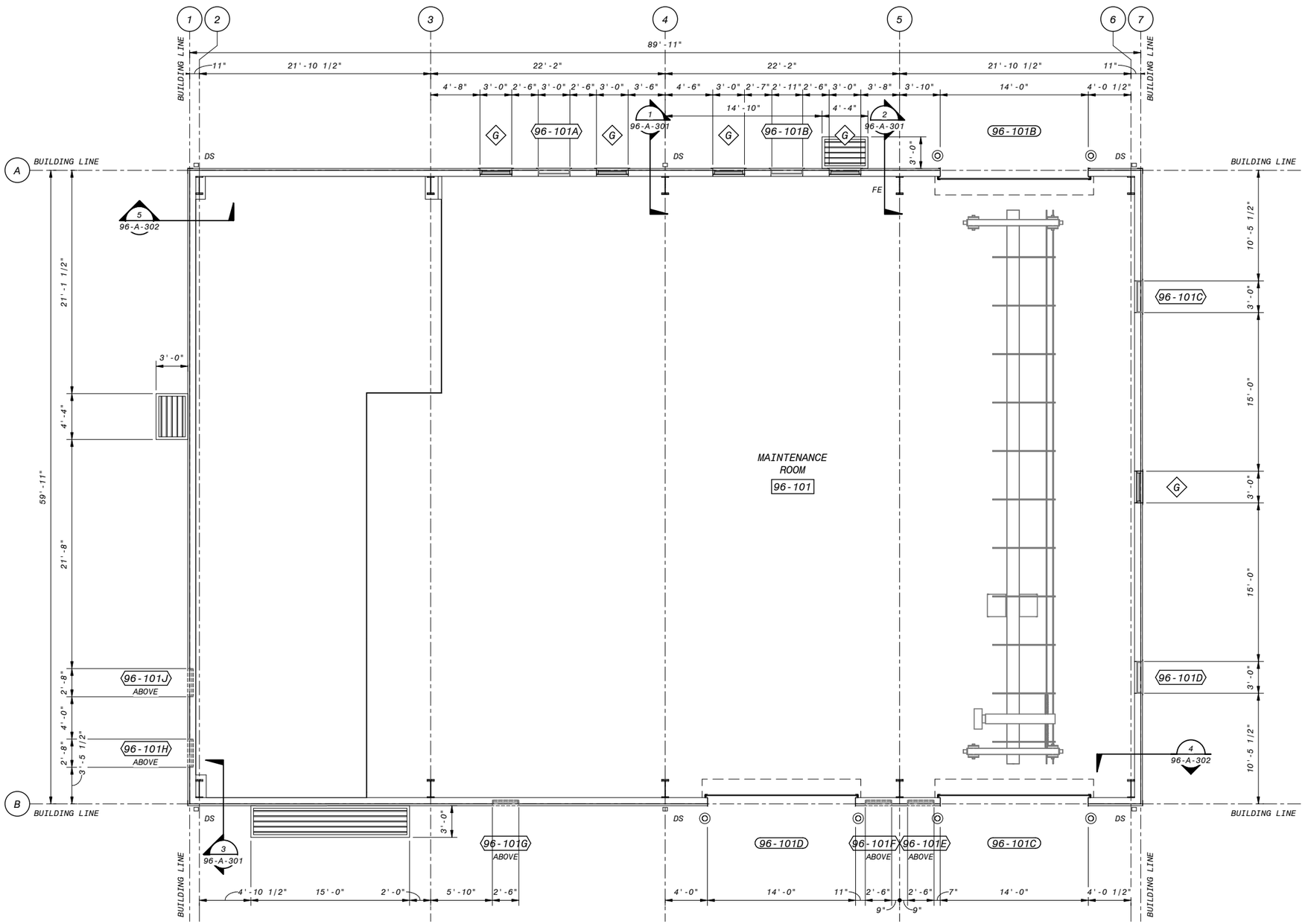


CLERESTORY PLAN

3/16" = 1'-0"

GENERAL SHEET NOTES

SHEET KEYNOTES

| NO. | BY | CHK | APP |
|---|---|---|---|
| B | BDF | BDF | EVB |

60% SUBMITTAL

REVISIONS AND RECORD OF USE

DATE 7/30/2019

FRASER SEIPLE ARCHITECTS

JOINT VENTURE

FILANC

BLACK & VEATCH

CITY OF MORRO BAY
MORRO BAY WATER
RECLAMATION FACILITY (WRF)

MAINTENANCE BUILDING
ARCHITECTURAL
CLERESTORY PLAN

DESIGNED: BDF
DETAILED: ANH
CHECKED: -
APPROVED: Approver
DATE:

0 1/2 1

IF THIS BAR DOES NOT MEASURE 1" THEN DRAWING IS NOT TO FULL SCALE

PROJECT NO.
400530

96-A-103
SHEET
OF

6" 4' 2' 0' 5' 10'

3/16" = 1'-0"

COASTAL DEVELOPMENT PERMIT PLANS

PLOTTED: 7/29/2019 8:29:47 PM

D400530

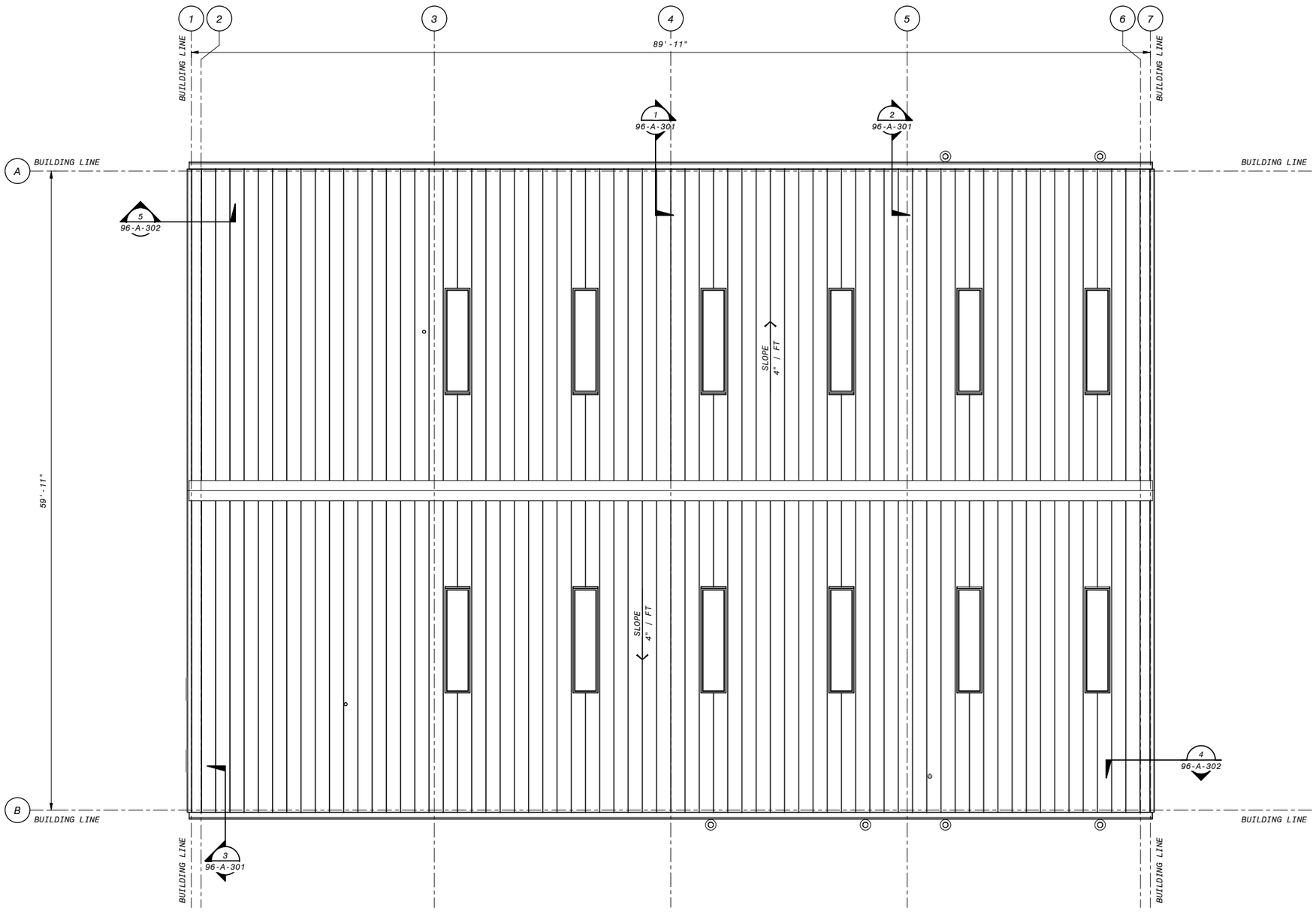


ROOF PLAN
3/16" = 1'-0"

GENERAL SHEET NOTES

SHEET KEYNOTES

| NO. | BY | CHK | APP |
|---|---|---|---|
| B | BDF | BDF | EVB |

| DATE | REVISIONS AND RECORD OF USE |
|---|---|
| 7/30/2019 | 60% SUBMITTAL |

FRASER SEIPLE ARCHITECTS

JOINT VENTURE

FILANC

BLACK & VEATCH

CITY OF MORRO BAY
MORRO BAY WATER
RECLAMATION FACILITY (WRF)

MAINTENANCE BUILDING
ARCHITECTURAL
ROOF PLAN

DESIGNED: BDF
DETAILED: ANH
CHECKED: -
APPROVED: -
DATE:

0 1/2 1
IF THIS BAR DOES NOT MEASURE 1" THEN DRAWING IS NOT TO FULL SCALE

PROJECT NO.
400530

96-A-104
SHEET
OF

6" 4' 2' 0' 5' 10'
3/16" = 1'-0"

COASTAL DEVELOPMENT PERMIT PLANS

PLOTTED: 7/29/2019 8:29:48 PM
D400530

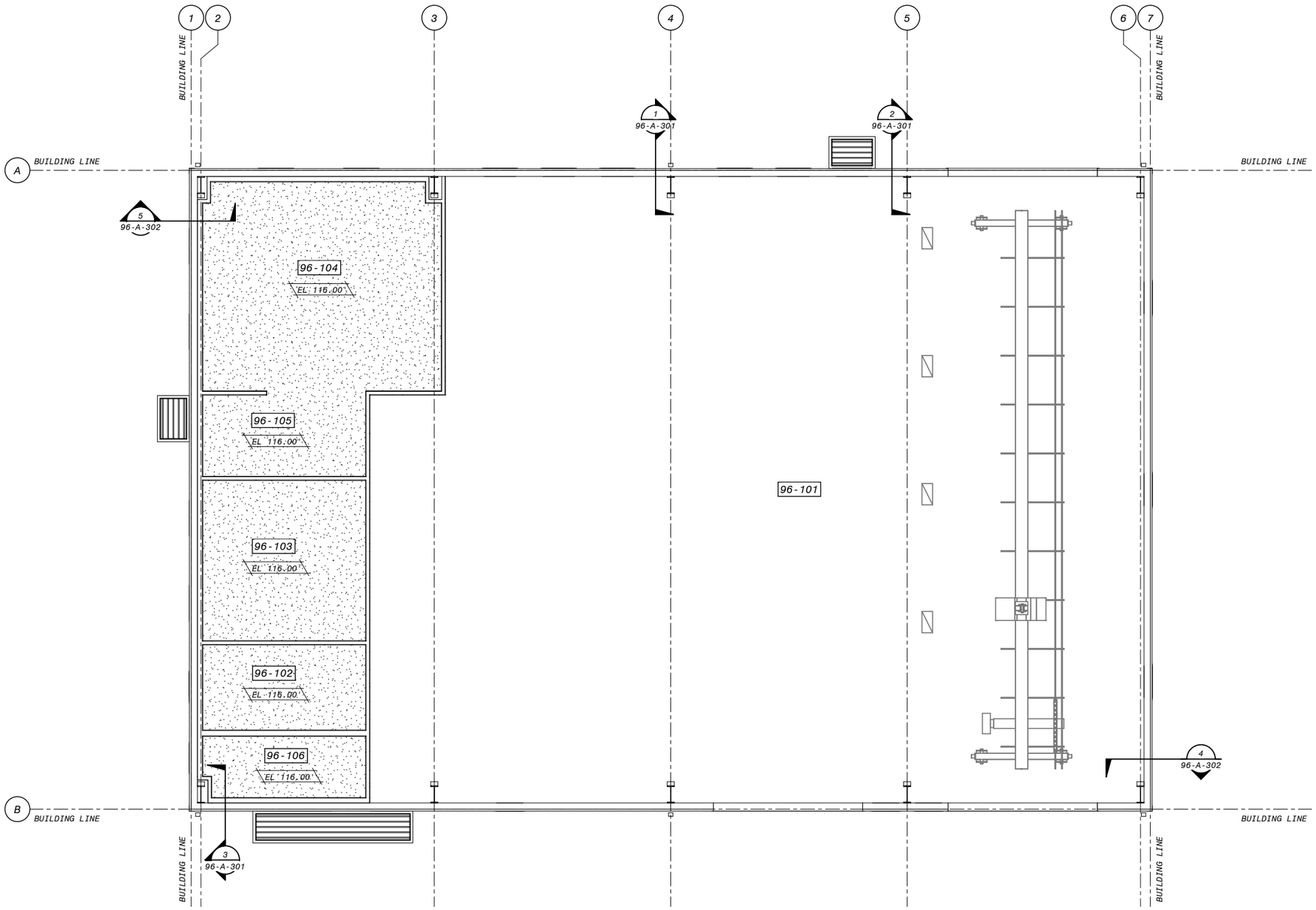


REFLECTED CEILING PLAN

3/16" = 1'-0"

GENERAL SHEET NOTES

SHEET KEYNOTES

CEILING PLAN LEGEND

LIGHT FIXTURES

EXHAUST DIFFUSER OR RETURN DIFFUSER

SUPPLY DIFFUSER

6" 4' 2' 0' 5' 10'

3/16" = 1'-0"

| NO. | BY | CHK | APP |
|---|---|---|---|
| B | BDF | BDF | EVB |

| DATE | REVISIONS AND RECORD OF USE |
|---|---|
| 7/30/2019 | 60% SUBMITTAL |

FRASER SEIPLE ARCHITECTS

JOINT VENTURE

FILANC

BLACK & VEATCH

CITY OF MORRO BAY
MORRO BAY WATER
RECLAMATION FACILITY (WRF)

MAINTENANCE BUILDING
ARCHITECTURAL
REFLECTED CEILING PLAN

DESIGNED: BDF
DETAILED: ANH
CHECKED: -
APPROVED: -
DATE:

0 1/2 1

IF THIS BAR DOES NOT MEASURE 1" THEN DRAWING IS NOT TO FULL SCALE

PROJECT NO.
400530

96-A-105
SHEET
OF

COASTAL DEVELOPMENT PERMIT PLANS

PLOTTED: 7/29/2019 8:29:49 PM

D400530

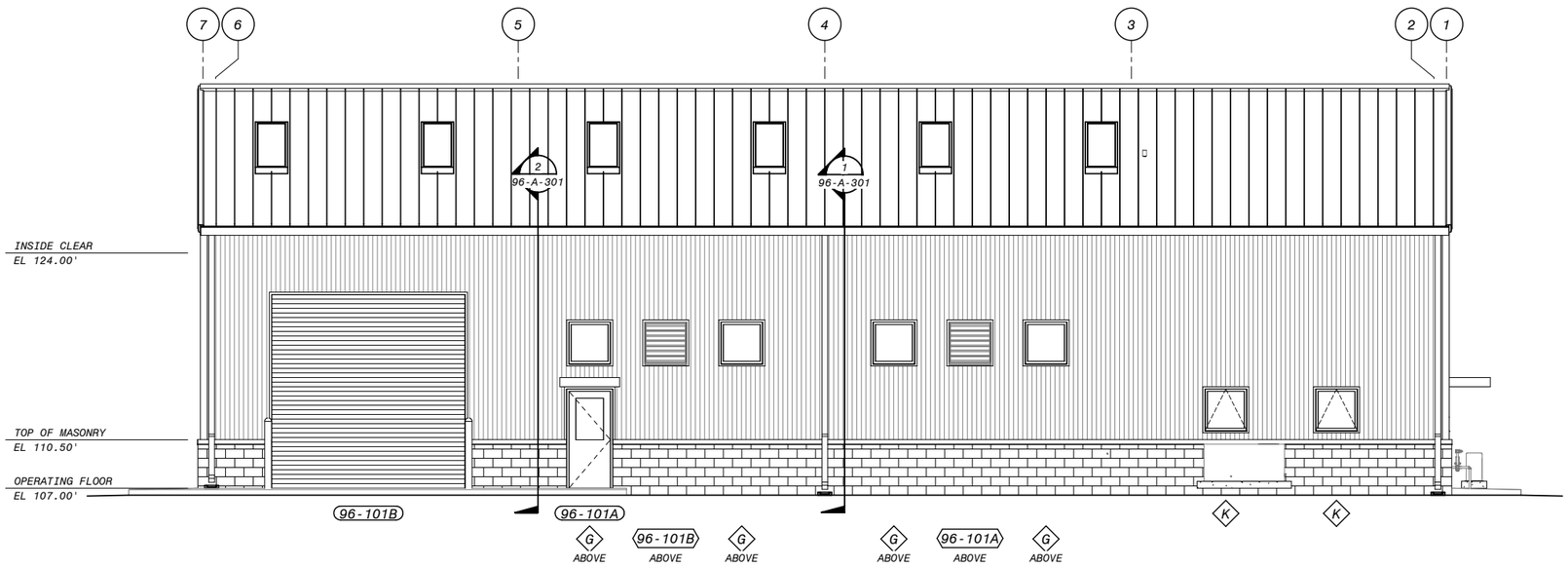


NORTH ELEVATION

3/16" = 1'-0"

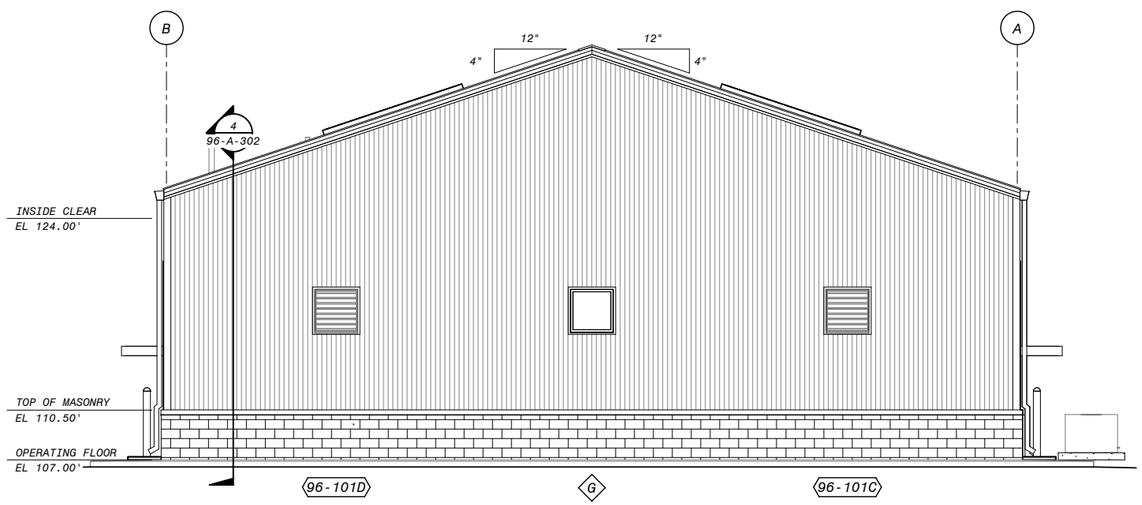


EAST ELEVATION

3/16" = 1'-0"

GENERAL SHEET NOTES

SHEET KEYNOTES

6" 4' 2' 0' 5' 10'

3/16" = 1'-0"

COASTAL DEVELOPMENT PERMIT PLANS

| NO. | DATE | REVISIONS AND RECORD OF USE | BY | CHK | APP |
|---|---|---|---|---|---|
| B | 7/30/2019 | 60% SUBMITTAL | BDF | EVB | |
| A | 3/5/2019 | 30% SUBMITTAL | | | |

FRASER SEIPLE ARCHITECTS

JOINT VENTURE

BLACK & VEATCH

FILANC

CITY OF MORRO BAY
MORRO BAY WATER
RECLAMATION FACILITY (WRF)

MAINTENANCE BUILDING
ARCHITECTURAL
ELEVATIONS

DESIGNED: BDF
DETAILED: ANH
CHECKED: -
APPROVED: -
DATE:

0 1/2 1

IF THIS BAR DOES NOT MEASURE 1" THEN DRAWING IS NOT TO FULL SCALE

PROJECT NO.
400530

96-A-201

SHEET
OF

PLOTTED: 7/29/2019 8:29:51 PM

D400530

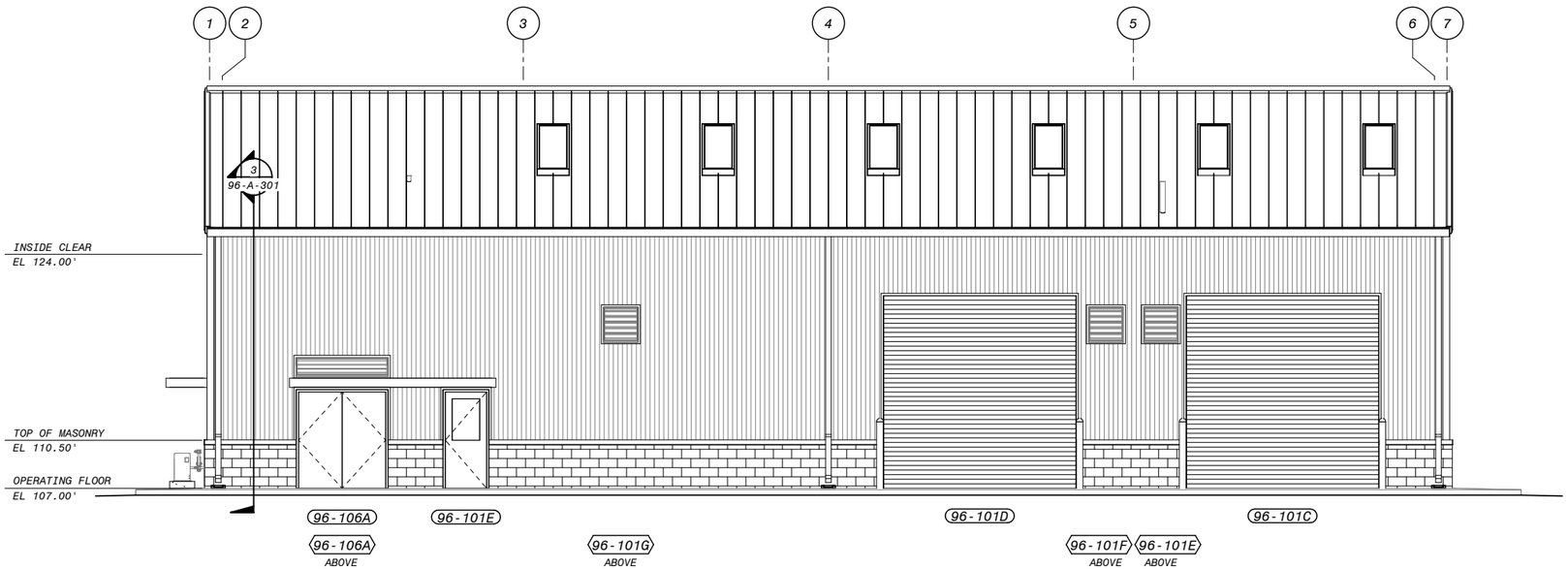


SOUTH ELEVATION

3/16" = 1'-0"

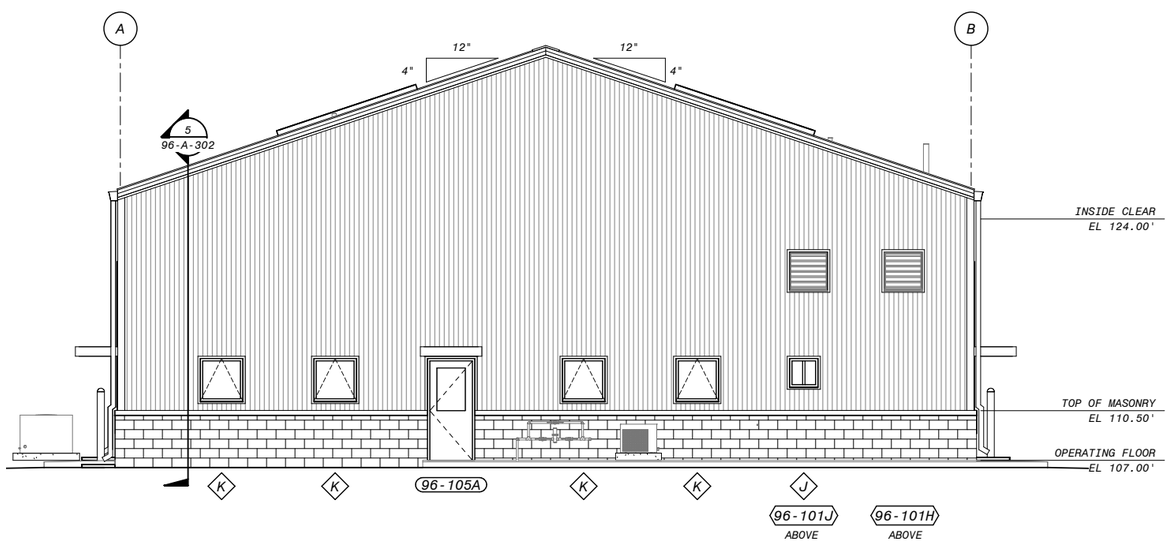


WEST ELEVATION

3/16" = 1'-0"

GENERAL SHEET NOTES

SHEET KEYNOTES

6" 4' 2' 0' 5' 10'

3/16" = 1'-0"

COASTAL DEVELOPMENT PERMIT PLANS

| NO. | BY | CHK | APP |
|---|---|---|---|
| B | BDF | BDF | EVB |

60% SUBMITTAL

REVISIONS AND RECORD OF USE

DATE 7/30/2019

FRASER SEIPLE ARCHITECTS

JOINT VENTURE

FILANC

BLACK & VEATCH

CITY OF MORRO BAY
MORRO BAY WATER
RECLAMATION FACILITY (WRF)

MAINTENANCE BUILDING
ARCHITECTURAL
ELEVATIONS

DESIGNED: BDF
DETAILED: ANH
CHECKED: -
APPROVED: -
DATE:

0 1/2 1

IF THIS BAR DOES NOT MEASURE 1" THEN DRAWING IS NOT TO FULL SCALE

PROJECT NO.
400530

96-A-202

SHEET
OF

PLOTTED: 7/29/2019 8:29:53 PM

D400530

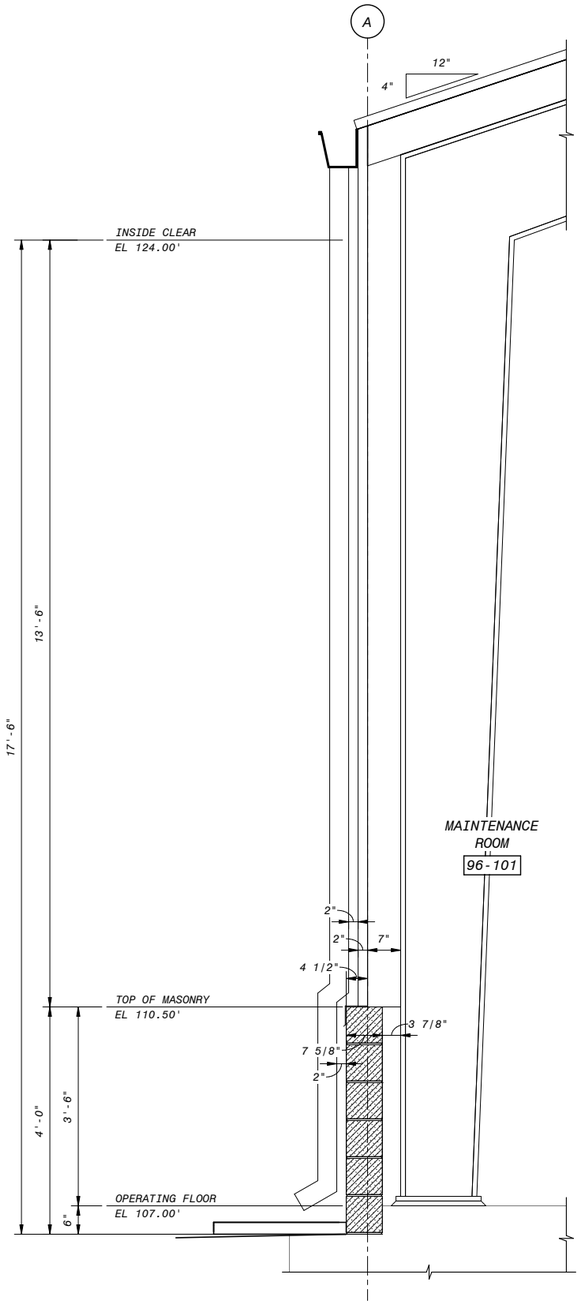


1 SECTION
96-A-102 3/4" = 1'-0"

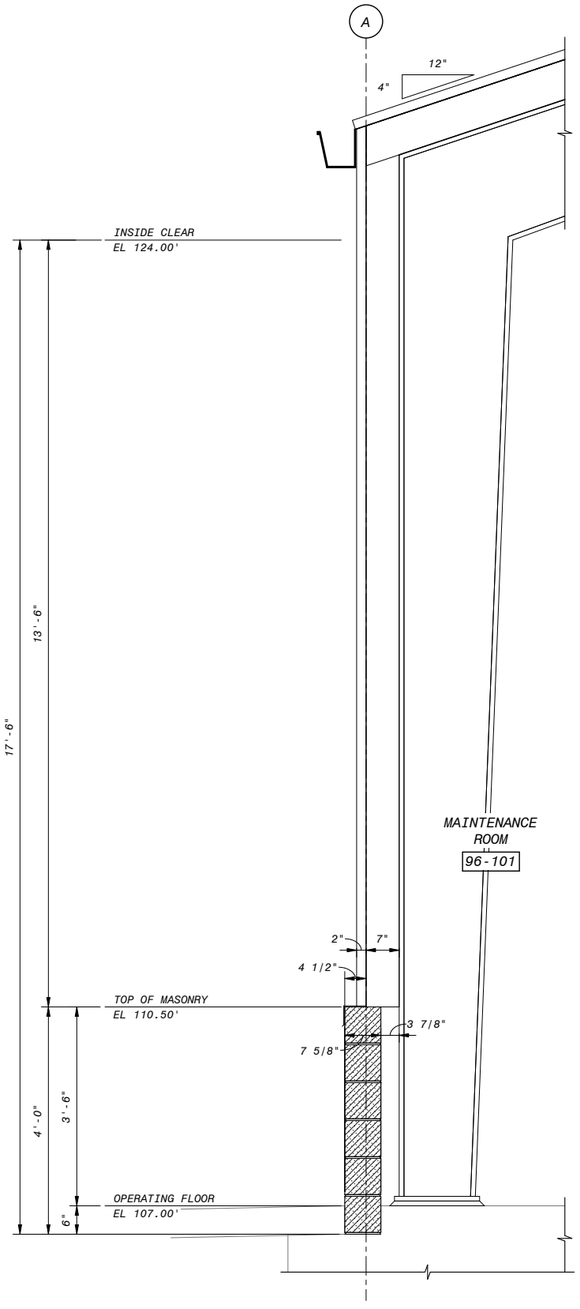


2 SECTION
96-A-102 3/4" = 1'-0"

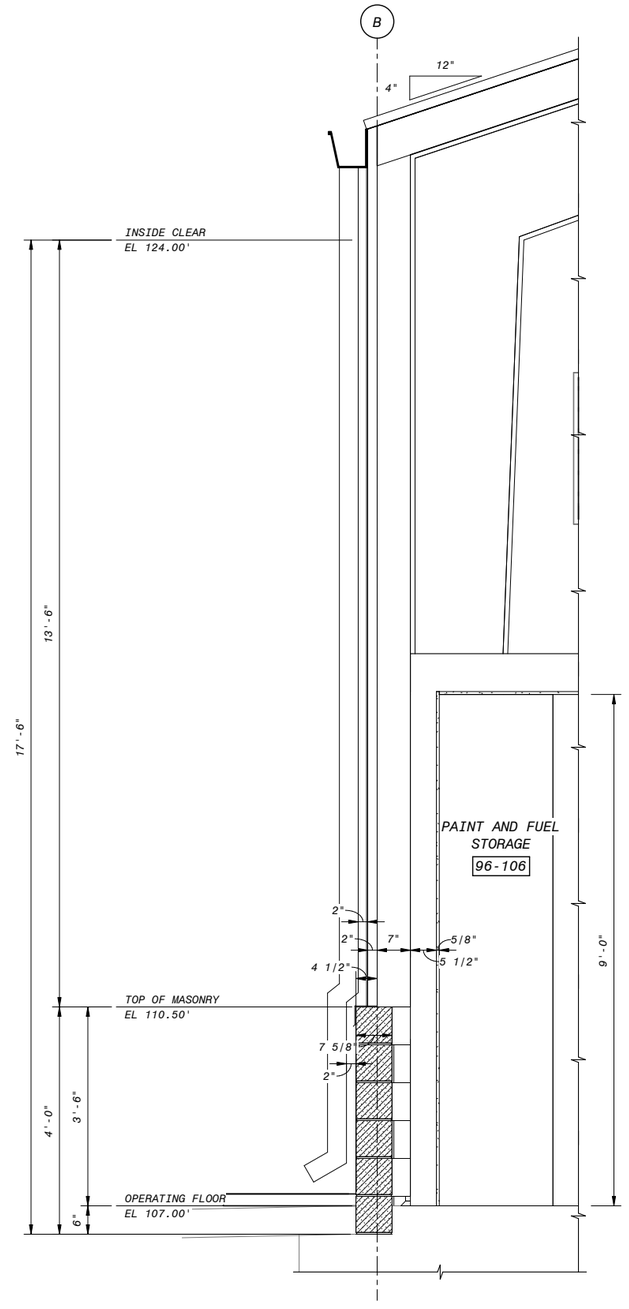


3 SECTION
96-A-102 3/4" = 1'-0"

## GENERAL SHEET NOTES

1. FOR VERTICAL REINFORCING AND BOND BEAMS IN MASONRY DESIGN - SEE STRUCTURAL DRAWINGS
2. FOR HORIZONTAL JOINT REINFORCING - SEE SPECIFICATION SECTION 04200

## SHEET KEYNOTES

12" 6" 0' 1' 2' 3'
3/4" = 1'-0"

# COASTAL DEVELOPMENT PERMIT PLANS

| NO. | BY | CHK | APP | DATE | REVISIONS AND RECORD OF USE |
|---|---|---|---|---|---|
| B | BDF | BDF | EVB | 7/30/2019 | 60% SUBMITTAL |

FRASER SEIPLE ARCHITECTS
JOINT VENTURE
FILANC
BLACK & VEATCH

CITY OF MORRO BAY
MORRO BAY WATER
RECLAMATION FACILITY (WRF)

MAINTENANCE BUILDING
ARCHITECTURAL
WALL SECTIONS

DESIGNED: BDF
DETAILED: ANH
CHECKED: -
APPROVED: -
DATE:

0 1/2 1
IF THIS BAR DOES NOT MEASURE 1" THEN DRAWING IS NOT TO FULL SCALE

PROJECT NO.
400530

96-A-301
SHEET
OF

PLOTTED: 7/29/2019 8:29:54 PM
D400530

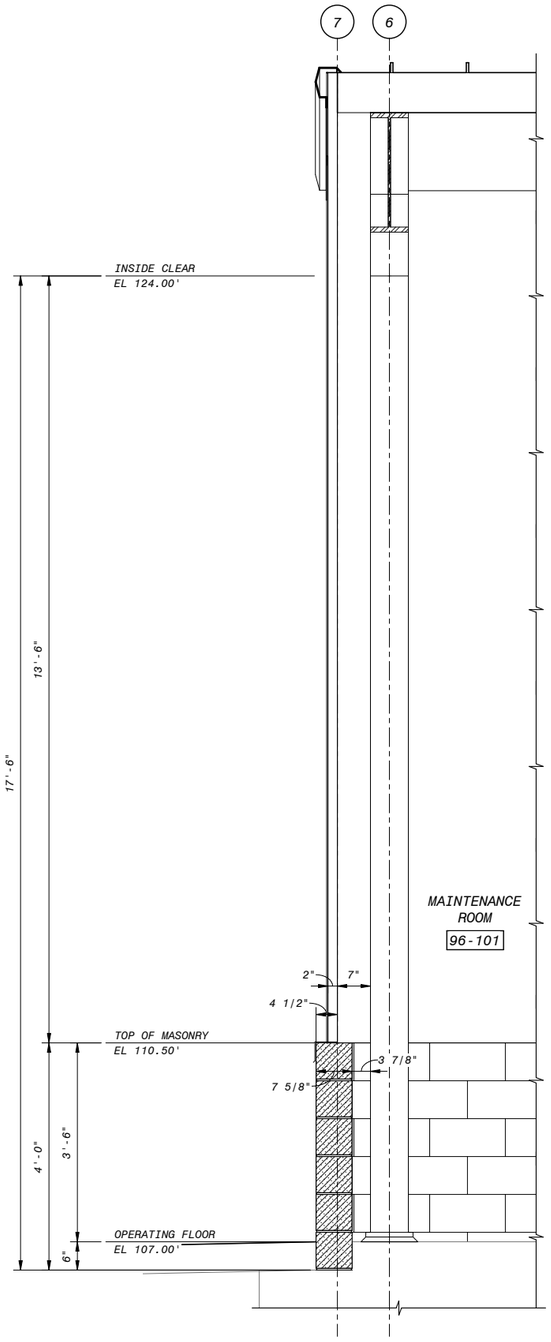


4 SECTION
96-A-102 3/4" = 1'-0"

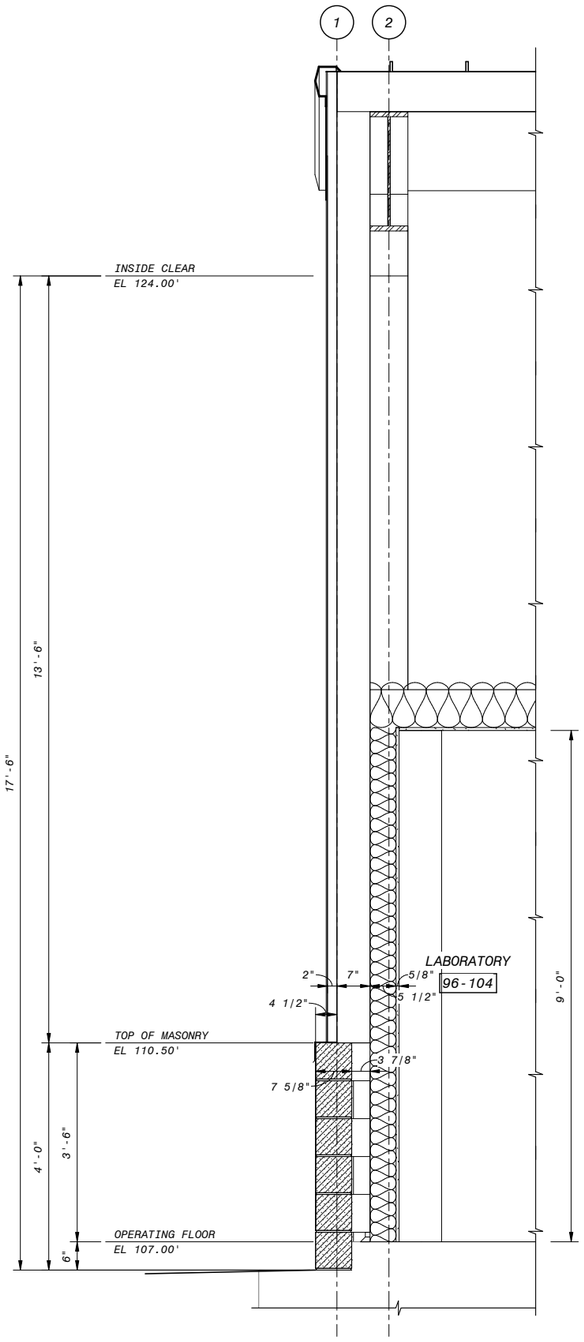


5 SECTION
96-A-102 3/4" = 1'-0"

## GENERAL SHEET NOTES

1. FOR VERTICAL REINFORCING AND BOND BEAMS IN MASONRY DESIGN - SEE STRUCTURAL DRAWINGS
2. FOR HORIZONTAL JOINT REINFORCING - SEE SPECIFICATION SECTION 04200

## SHEET KEYNOTES

12" 6" 0' 1' 2' 3'
3/4" = 1'-0"

# COASTAL DEVELOPMENT PERMIT PLANS

| NO. | BY | CHK | APP |
|---|---|---|---|
| B | BDF | BDF | EVB |

60% SUBMITTAL
REVISIONS AND RECORD OF USE
7/30/2019
DATE

FRASER SEIPLE ARCHITECTS
JOINT VENTURE
FILANC
BLACK & VEATCH

CITY OF MORRO BAY
MORRO BAY WATER
RECLAMATION FACILITY (WRF)

MAINTENANCE BUILDING
ARCHITECTURAL
WALL SECTIONS

DESIGNED: BDF
DETAILED: ANH
CHECKED: -
APPROVED: -
DATE:

0 1/2 1
IF THIS BAR DOES NOT MEASURE 1" THEN DRAWING IS NOT TO FULL SCALE

PROJECT NO.
400530

96-A-302
SHEET
OF

PLOTTED: 7/29/2019 8:29:55 PM
D400530

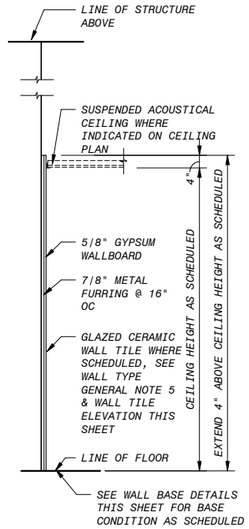


A WALL TYPE

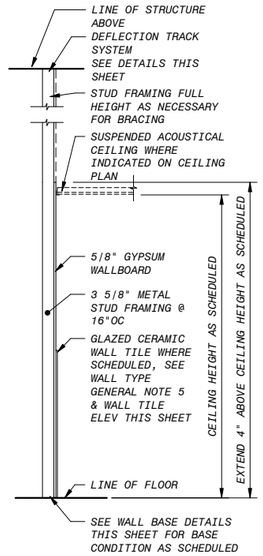


B WALL TYPE

B1 EXTEND FULL HEIGHT TO UNDERSIDE OF STRUCTURE

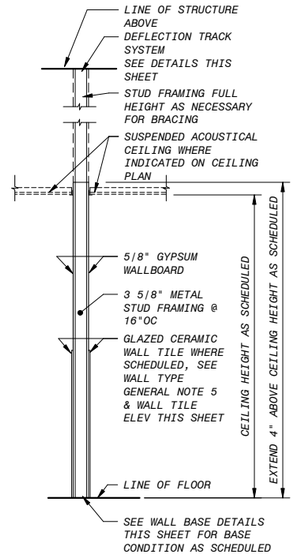


C WALL TYPE

C1 EXTEND STUD FRAMING & GWB BOTH SIDES FULL HEIGHT TO UNDERSIDE OF STRUCTURE

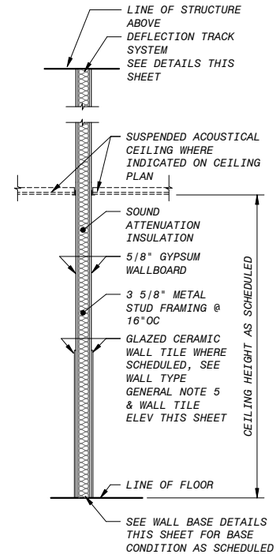


D WALL TYPE

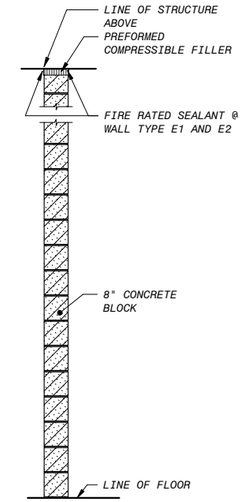


E WALL TYPE

E1 1 HOUR FIRE RATED CONSTRUCTION

E2 2 HOUR FIRE RATED CONSTRUCTION

1 WALL TYPES
1/2" = 1'-0"

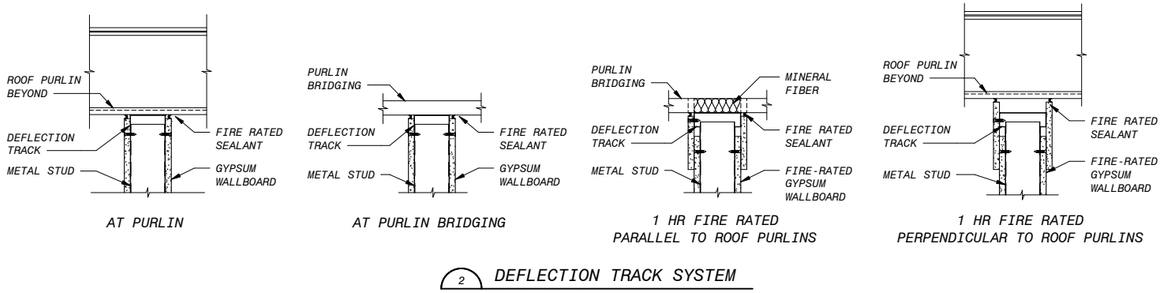


2 DEFLECTION TRACK SYSTEM
1 1/2" = 1'-0"

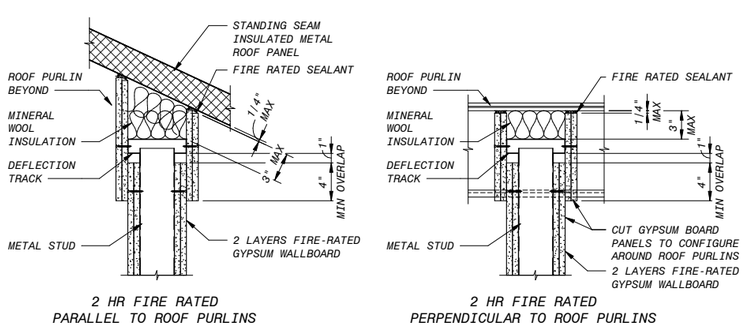


3 DEFLECTION TRACK SYSTEM
1 1/2" = 1'-0"

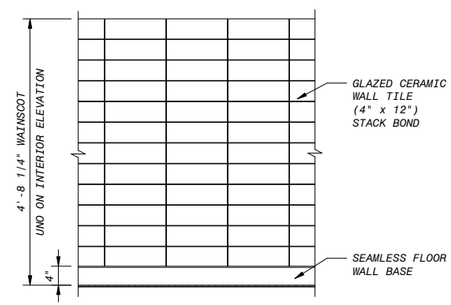


4 WALL TILE ELEVATION
3/4" = 1'-0"

## GENERAL SHEET NOTES

## WALL TYPES NOTES

1. SEE ROOM FINISH SCHEDULE FOR WALL FINISHES AND CEILING HEIGHTS.
2. SEE FLOOR PLANS FOR FIRE RATED WALL LOCATIONS AND HOURLY RATED REQUIREMENTS.
3. PROVIDE ACOUSTICAL SEALANT AT WALL TYPES INDICATED TO RECEIVE SOUND ATTENUATION INSULATION.
4. PROVIDE FIRE STOPPING AND FIRE RATED SEALANT AS REQUIRED FOR ASSEMBLY INDICATED AT FIRE RATED WALLS.
5. PROVIDE CEMENT BACKER BOARD WHERE INDICATED IN LIEU OF GYPSUM WALLBOARD WHERE WALL IS SCHEDULED TO RECEIVE CERAMIC TILE FINISH, UNLESS NOTED OTHERWISE FOR SPECIFIC WALL TYPE.
6. SEE STRUCTURAL DRAWINGS FOR TOP AND BOTTOM OF WALL CONDITIONS.
7. SEE SPECIFICATION SECTION 04200 FOR JOINT REINFORCING.
8. SEE STRUCTURAL DRAWINGS FOR TOP AND BOTTOM OF WALL CONDITION AT CMU WALLS.

12" 9" 6" 3" 0" 1'
1 1/2" = 1'-0"

12" 6" 0" 1' 2' 3'
3/4" = 1'-0"

12' 6' 0' 1' 2' 3' 4' 5'
1/2" = 1'-0"

| NO. | BY | CHK | APP |
|---|---|---|---|
| B | BDF | BDF | EVB |

| DATE | REVISIONS AND RECORD OF USE |
|---|---|
| 7/30/2019 | 60% SUBMITTAL |

FRASER SEIPLE ARCHITECTS
JOINT VENTURE
BLACK & VEATCH
FILANC

CITY OF MORRO BAY
MORRO BAY WATER
RECLAMATION FACILITY (WRF)

MAINTENANCE BUILDING
ARCHITECTURAL
WALL TYPES AND CONNECTION DETAILS

DESIGNED: BDF
DETAILED: ANH
CHECKED: -
APPROVED: -
DATE:

0 1/2 1
IF THIS BAR DOES NOT MEASURE 1" THEN DRAWING IS NOT TO FULL SCALE

PROJECT NO.
400530

96-A-303
SHEET
OF

COASTAL DEVELOPMENT PERMIT PLANS

PLOTTED: 7/29/2019 8:29:56 PM
D400530

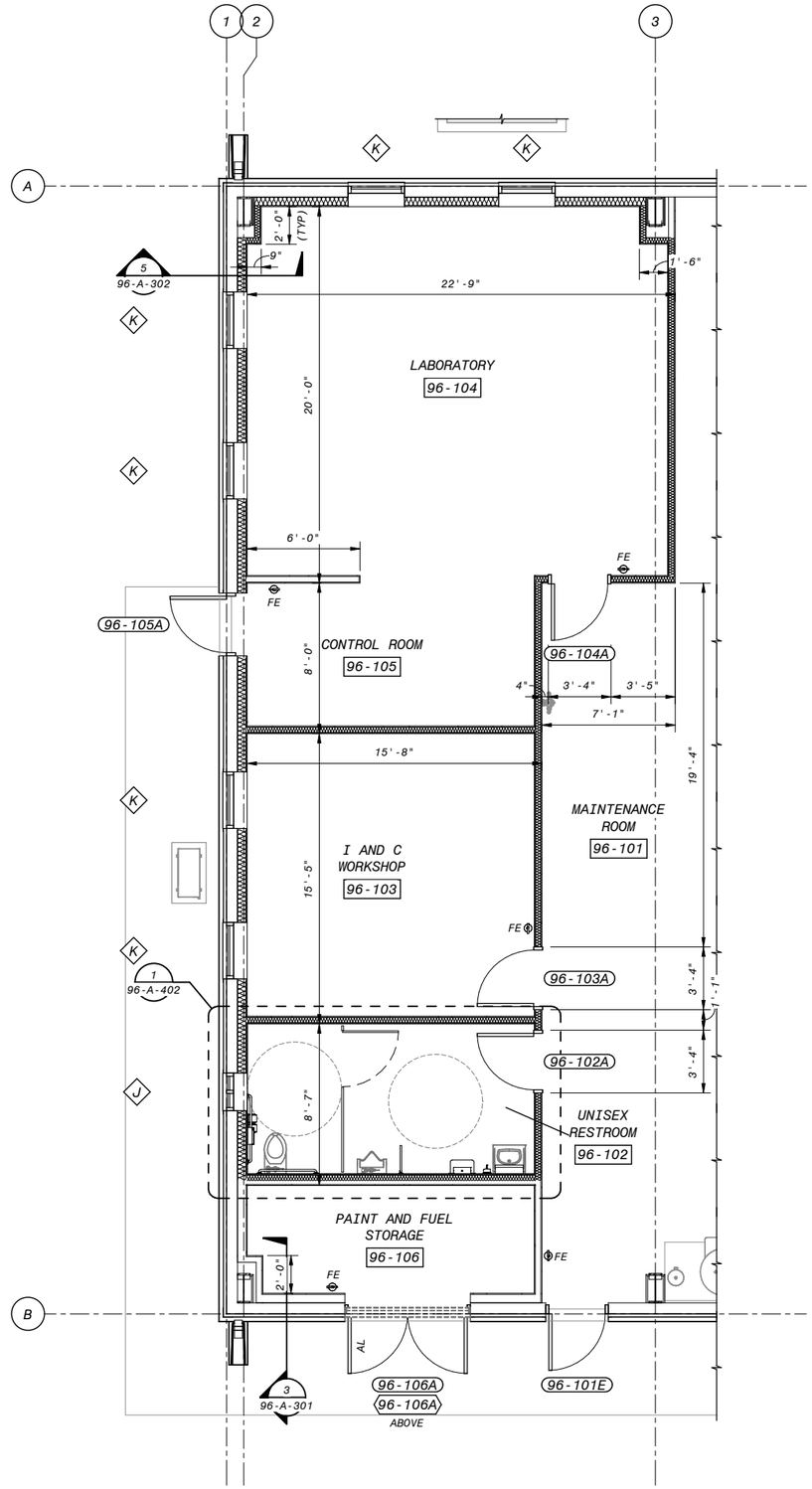


1 ENLARGED - OPERATING FLOOR PLAN
96-A-102 1/4" = 1'-0"

GENERAL SHEET NOTES

SHEET KEYNOTES

6" 4' 2' 0' 5' 10'
3/16" = 1'-0"

COASTAL DEVELOPMENT PERMIT PLANS

| NO. | BY | CHK | APP |
|---|---|---|---|
| B | BDF | BDF | EVB |

60% SUBMITTAL
REVISIONS AND RECORD OF USE
7/30/2019
DATE

FRASER SEIPLE ARCHITECTS
JOINT VENTURE
BLACK & VEATCH
FILANC

CITY OF MORRO BAY
MORRO BAY WATER
RECLAMATION FACILITY (WRF)

MAINTENANCE BUILDING
ARCHITECTURAL
INTERMEDIATE FLOOR PLAN

DESIGNED: BDF
DETAILED: ANH
CHECKED: -
APPROVED: -
DATE:

0 1/2 1
IF THIS BAR DOES NOT MEASURE 1" THEN DRAWING IS NOT TO FULL SCALE

PROJECT NO.
400530

96-A-401
SHEET
OF

PLOTTED: 7/29/2019 8:29:58 PM
D400530

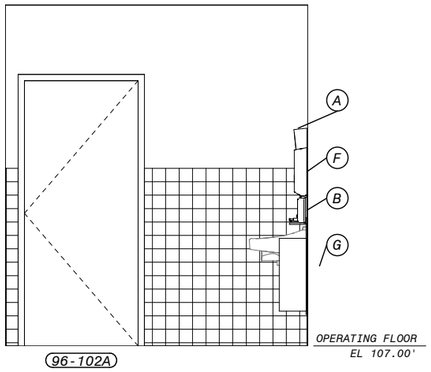


A UNISEX RESTROOM ELEVATION - EAST
96-A-402 1/2" = 1'-0"

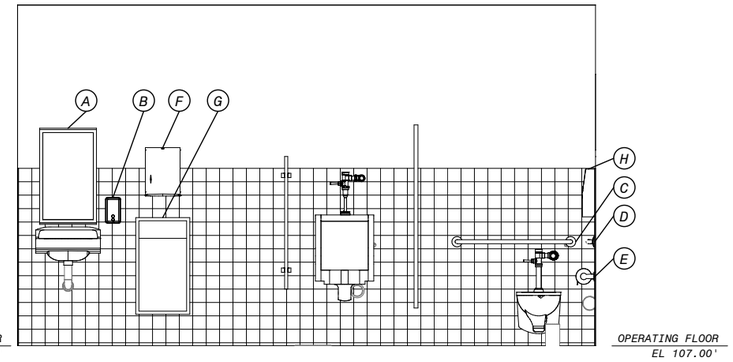


B UNISEX RESTROOM ELEVATION - SOUTH
96-A-402 1/2" = 1'-0"

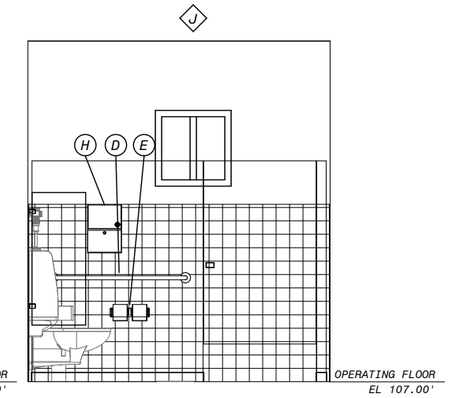


C UNISEX RESTROOM ELEVATION - WEST
96-A-402 1/2" = 1'-0"

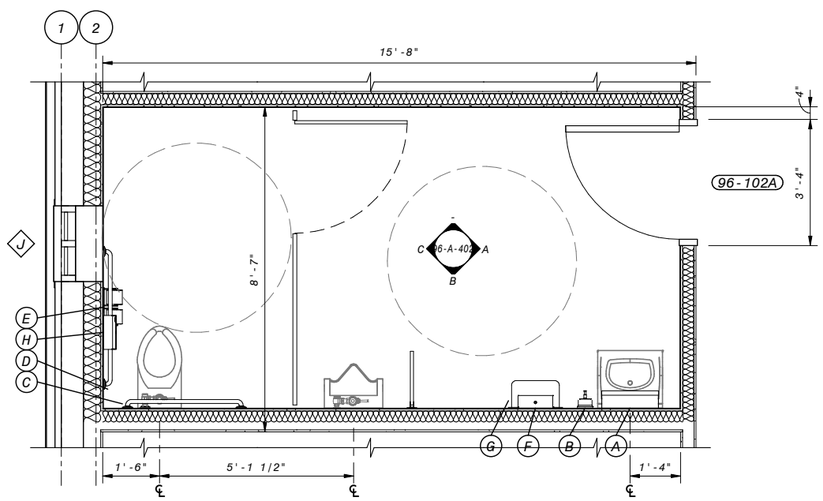


1 ENLARGED - UNISEX RESTROOM PLAN
96-A-401 1/2" = 1'-0"

## ACCESSORY SCHEDULE

| QTY | TYPE | DESCRIPTION | MOUNTING HEIGHT |
|---|---|---|---|
| 1 | A | FIXED TILT MIRROR, WITH SHELF, XX by XX inches | |
| 1 | B | SOAP DISPENSER | |
| 1 | C | 36" GRAB BAR | |
| 1 | D | 42" GRAB BAR | |
| 1 | E | Toilet Tissue Dispenser | |
| 1 | F | TOWEL DISPENSER | |
| 1 | G | WASTE RECEPTACLE, 18 GALLON, RECESSED | |
| 1 | H | NAPKIN DISPOSAL, 1.5 GALLONS, SURFACE-MOUNTED | |

GENERAL SHEET NOTES

SHEET KEYNOTES

4' 2' 0' 4' 8'
1/4" = 1'-0"

COASTAL DEVELOPMENT PERMIT PLANS

| NO. | BY | CHK | APP |
|---|---|---|---|
| B | BDF | BDF | EVB |

60% SUBMITTAL
REVISIONS AND RECORD OF USE
7/30/2019
DATE

FRASER SEIPLE ARCHITECTS
JOINT VENTURE
FILANC
BLACK & VEATCH

CITY OF MORRO BAY
MORRO BAY WATER
RECLAMATION FACILITY (WRF)

MAINTENANCE BUILDING
ARCHITECTURAL
ENLARGED INTERMEDIATE FLOOR PLAN

DESIGNED: BDF
DETAILED: ANH
CHECKED: -
APPROVED: -
DATE:

0 1/2 1
IF THIS BAR DOES NOT MEASURE 1" THEN DRAWING IS NOT TO FULL SCALE

PROJECT NO.
400530

96-A-402
SHEET
OF

PLOTTED: 7/29/2019 8:30:01 PM
D400530

## GENERAL ABBREVIATIONS

| | |
|---|---|
| **A** | |
| A | ALARM, COMPRESSED AIR OUTLET |
| AC | AIR COMPRESSOR |
| AD | ACCESS DOOR, AIR DRYER |
| AFD | ADJUSTABLE FREQUENCY DRIVE |
| AFF | ABOVE FINISH FLOOR |
| ALUM | ALUMINUM |
| AP | ACCESS PANEL |
| APPROX | APPROXIMATE |
| AR | AIR RECEIVER |
| AUTO | AUTOMATIC |
| AVG | AVERAGE |
| AVS | AUTOMATIC VALVE STATION |
| **B** | |
| BF | BLIND FLANGE |
| BFF | BELOW FINISH FLOOR |
| BFP | BACKFLOW PREVENTER |
| BLDG | BUILDING |
| BOT | BOTTOM |
| BTUH | BRITISH THERMAL UNITS PER HOUR |
| BU | BELL-UP |
| BV | BALL VALVE |
| **C** | |
| C | CHANNEL |
| CENTR | CENTRIFUGAL |
| CF | CABINET FAN |
| C/L | CENTERLINE |
| CO | CLEANOUT |
| CONC | CONCRETE |
| CONN | CONNECTION |
| CONT | CONTINUATION |
| CP | CIRCULATING PUMP |
| CS | CONTROL STATION |
| CV | CHECK VALVE, CONTROL VALVE |
| CWW | CLEAR WATER WASTE |
| **D** | |
| D | DIRECT DRIVE |
| DEH | DEHUMIDIFIER |
| DF | DRINKING FOUNTAIN |
| DIA | DIAMETER |
| DN | DOWN |
| DSN | DOWNSPOUT NOZZLE |
| **E** | |
| E | ELECTRIC |
| EA | EACH |
| EEW | EMERGENCY EYE WASH |
| EFF | EFFICIENCY |
| EL | ELEVATION |
| EP | EXPLOSION PROOF |
| EQUIP | EQUIPMENT |
| ES | EMERGENCY SHOWER |
| ES/EEW | EMERGENCY SHOWER AND EYEWASH |
| ET | EXPANSION TANK |
| EWC | ELECTRIC WATER COOLER |
| EWH | ELECTRIC WATER HEATER |
| EWT | ENTERING WATER TEMPERATURE |
| EXIST | EXISTING |
| **F** | |
| F | DEGREES FAHRENHEIT |
| FCO | FLOOR CLEANOUT |
| FD | FLOOR DRAIN |
| FDB | DEGREES FAHRENHEIT DRY BULB |
| FLEX | FLEXIBLE |
| FM | FLOW METER |
| FPM | FEET PER MINUTE |
| FR | FUNNEL RECEPTOR |
| FS | FLOOR SINK, FLOW SWITCH |
| FSW | FILTER SURFACE WASH |
| FT | FEET |
| **G** | |
| G | GAS OUTLET |
| GA | GAUGE |
| GALV | GALVANIZED |
| GCO | GRADE CLEANOUT |
| GD | GARBAGE DISPOSER |
| GIH | GAS INFRARED HEATER |
| GPM | GALLONS PER MINUTE |
| GUH | GAS UNIT HEATER |
| GV | GATE VALVE |
| GW | GLASS WASHER |
| GWH | GAS WATER HEATER |
| **H** | |
| H | HAND OPERATOR, HEIGHT, HORIZONTAL |
| HE | HEAT EXCHANGER, HELIUM |
| HF | HOSE FAUCET |
| HO | HAND-OFF |
| HOA | HAND-OFF-AUTO |
| HP | HORSEPOWER |
| HR | HOUR, HOSE REEL |
| HUM | HUMIDIFIER |
| HV | HOSE VALVE |
| HWB | HEATING WATER BOILER |
| HZ | HERTZ |
| **I** | |
| I | INTAKE |
| ID | INSIDE DIAMETER |
| IN | INCHES |
| INV | INVERT |
| **J** | |
| JS | JANITOR'S SINK |
| **K** | |
| KS | KITCHEN SINK |
| KW | KILOWATT |
| **L** | |
| LAV | LAVATORY |
| LBS | POUNDS |
| LI | LEVEL INDICATOR |
| LS | LABORATORY SINK, LEVEL SWITCH |
| LWT | LEAVING WATER TEMPERATUREMAU MAKEUP AIR UNIT |
| **M** | |
| MAX | MAXIMUM |
| MCA | MINIMUM CIRCUIT AMPS |
| MFR | MANUFACTURER |
| MIN | MINIMUM |
| MOD | MODULATING |
| MS | MOP SINK |
| **N** | |
| NC | NORMALLY CLOSED |
| NO | NORMALLY OPEN, NUMBER |
| NPSHR | NET POSITIVE SUCTION HEAD REQUIRED |
| NT | NEUTRALIZATION TANK |
| **O** | |
| OD | OUTSIDE DIAMETER |
| ORD | OVERFLOW ROOF DRAIN |
| **P** | |
| PD | PRESSURE DROP (FEET OF WATER) |
| PAC | PACKAGED AIR CONDITIONING UNIT |
| PDI | PLUMBING AND DRAINAGE INSTITUTE |
| PDS | PRESSURE DIFFERENTIAL SWITCH |
| PL | PLATE |
| POS | POSITION |
| PPM | PARTS PER MILLION |
| PRS | PRESSURE REDUCING STATION |
| PRV | PRESSURE REDUCING VALVE |
| PS | PRESSURE SWITCH |
| PSI | POUNDS PER SQUARE INCH |
| PSIA | POUNDS PER SQUARE INCH ABSOLUTE |
| PSIG | POUNDS PER SQUARE INCH GAUGE |
| **R** | |
| RCS | REMOTE CONTROL STATION |
| RD | ROOF DRAIN |
| REQD | REQUIRED |
| **S** | |
| SF | SQUARE FEET, SUPPLY FAN |
| SH | SHEET, SHOWER |
| SIM | SIMILAR |
| SS | STAINLESS STEEL |
| SSK | SERVICE SINK |
| SSP | SUBMERSIBLE SUMP PUMP |
| STD | STANDARD |
| SV | SERVICE VALVE, SHUTOFF VALVE, SUPPLY VALVE, SOLENOID VALVE |
| **T** | |
| TD | TRENCH DRAIN |
| TP | TRAP PRIMER |
| TS | TAMPER SWITCH |
| TYP | TYPICAL |
| **U** | |
| UR | URINAL |
| **V** | |
| V | VERTICAL |
| VAC | VACUUM OUTLET |
| VB | VACUUM BREAKER |
| VCD | VOLUME CONTROL DAMPER |
| VF | VANEAXIAL FAN |
| VP | VACUUM PUMP |
| VSP | VERTICAL COLUMN SUMP PUMP |
| VTR | VENT THRU ROOF |
| **W** | |
| W | WIDE FLANGE, WIDTH |
| WBP | WATER BOOSTER PUMP |
| WC | WATER CLOSET, WATER COLUMN |
| WCO | WALL CLEANOUT |
| WG | WATER GAUGE |
| WH | WALL HYDRANT |
| WHA | WATER HAMMER ARRESTOR |
| WM | WALL MOUNTED |
| WST | WATER STORAGE TANK |
| WT | WEIGHT |

## VALVE LEGEND

PLAN SECTION

- ANGLE VALVE
- BACKFLOW PREVENTER W/ STRAINER (2" AND SMALLER)
- BACKFLOW PREVENTER
- BACKWATER VALVE
- BALL VALVE
- BUTTERFLY VALVE
- CHECK VALVE
- GATE VALVE
- GLOBE VALVE
- PLUG VALVE
- PRESSURE REDUCING VALVE
- THREE WAY VALVE

## PIPING LEGEND

- PIPING ABOVE FLOOR OR GRADE
- PIPING BELOW FLOOR OR GRADE
- PIPE TURNING UP
- PIPE TURNING DOWN

## PIPE FITTINGS LEGEND

- BLIND FLANGE
- CAP
- REDUCER
- SLEEVE
- TP — TEST PLUG
- UNION
- P-TRAP
- VTR

## PIPING ACCESSORIES LEGEND

- FLEXIBLE CONNECTION
- HF — HOSE FAUCET W/O VACUUM BREAKER
- HFVB — HOSE FAUCET W/ VACUUM BREAKER
- HV — HOSE VALVE W/ HOSE NIPPLE
- PRS — PRESSURE REDUCING STATION
- PRESSURE RELIEF VALVE
- T — PRESSURE / TEMPERATURE RELIEF VALVE
- Q — QUICK COUPLING
- WH — WALL HYDRANT W/ VACUUM BREAKER
- METER
- WYE STRAINER
- WYE STRAINER W/ BLOWOFF
- VACUUM BREAKER

## PLUMBING LEGEND

- BELL-UP DRAIN OR FUNNEL RECEPTOR W/ TRAP
- CLEANOUT (FLOOR)
- CLEANOUT (PIPE)
- BLENDING VALVE
- DOWNSPOUT NOZZLE
- EMERGENCY SHOWER / EYEWASH
- FLOOR DRAIN
- HOSE RACK
- HOSE REEL
- ROOF DRAIN
- SHOWER
- SPLASH BLOCK
- WATER HAMMER ARRESTOR W/ PDI SIZE DESIGNATION

## GENERAL PLUMBING NOTES

1. THIS IS GENERAL LEGEND AND ABBREVIATION SHEET FOR THE PLUMBING DRAWINGS. SOME ITEMS CONTAINED ON THIS SHEET MAY NOT BE USED ON THIS SPECIFIC PROJECT.
2. ALL MECHANICAL PLUMBING WORK SHALL BE IN ACCORDANCE WITH THE FOLLOWING APPLICABLE CODES:
   - 2016 CALIFORNIA BUILDING CODE
   - 2016 CALIFORNIA FIRE PROTECTION CODE
   - 2015 CALIFORNIA FUEL GAS CODE
   - 2016 CALIFORNIA PLUMBING BUILDING CODE
   - 2016 CALIFORNIA ENERGY CODE
3. FOR ROOFTOP EQUIPMENT CURBS, FLUES, AND FLASHING DETAILS, SEE ARCHITECTURAL DRAWINGS.
4. SEE ARCHITECTURAL AND STRUCTURAL DRAWINGS FOR ALL EQUIPMENT BASE DETAILS.
5. "SCREENED" DELINEATION DENOTES EXISTING AND NEW FACILITIES AND IS FOR REFERENCE ONLY. "LIGHT" LINE DELINEATION DENOTES EXISTING MECHANICAL EQUIPMENT AND SYSTEMS. EXISTING FACILITY AND MECHANICAL SYSTEMS INFORMATION WAS TAKEN FROM PREVIOUS DRAWINGS, CONSTRUCTION RECORDS, DATA, AND FIELD SURVEY INFORMATION. ACTUAL LOCATION, ARRANGEMENT, AND DIMENSIONS SHALL BE FIELD VERIFIED AND WORK INSTALLED TO MEET ACTUAL CONDITIONS AND LOCATIONS ENCOUNTERED. "BOLD" (DARK) DELINEATION IS NEW WORK TO BE CONSTRUCTED UNDER THIS CONTRACT.
6. ALL PIPE PENETRATIONS THROUGH FIRE RESISTANCE RATED ASSEMBLIES SHALL BE PROVIDED WITH FIRESTOP SYSTEMS, EQUIPMENT AND ACCESSORIES TO RESIST THE PASSAGE OF FIRE, SMOKE AND OTHER GASES. THE ORIGINAL FIRE RESISTANCE RATING OF THE ASSEMBLY PENETRATED SHALL BE MAINTAINED FOR ALL TYPES OF PENETRATIONS. SEE ARCHITECTURAL DRAWINGS FOR RATED ASSEMBLY LOCATIONS.
7. METAL ROOF DECKING OR BOTTOM CHORD OF BAR JOISTS SHALL NOT BE USED FOR THE SUPPORT OF EQUIPMENT OR PIPING.
8. ALL HANGERS, BRACKETS, OR BRACES FOR EQUIPMENT AND PIPING ARE NOT INDICATED ON THE DRAWINGS. REFER TO THE SPECIFICATIONS FOR SUPPORT REQUIREMENTS NOT SHOWN ON THE PLANS.
9. ALL EQUIPMENT AND PIPING FINAL LOCATIONS SHALL BE COORDINATED TO AVOID INTERFERENCES WITH STRUCTURE, OTHER PIPING, EQUIPMENT, DUCTWORK, AND CONDUIT. UNLESS SPECIFICALLY DIMENSIONED, THE PIPE ROUTING SHOWN IS INTENDED TO INDICATE GENERAL LOCATION ONLY.
10. ALL PIPING SHALL BE ROUTED AS HIGH AS POSSIBLE WITH A MINIMUM HEIGHT OF 8'-0" ABOVE THE WALKING SURFACE UNLESS OTHERWISE INDICATED BY A CENTERLINE OR INVERT ELEVATION.
11. PIPING INSTALLED ABOVE SUSPENDED CEILINGS SHALL BE INSTALLED TO ALLOW A MINIMUM 8'-0" INCH CLEARANCE BETWEEN THE CEILING AND PIPING.
12. ALL HOSE FAUCETS AND HOSE VALVES SHALL BE INSTALLED 3'-0" ABOVE FINISHED FLOOR UNLESS OTHERWISE NOTED. WALL HYDRANTS SHALL BE INSTALLED 2'-0" ABOVE GRADE UNLESS OTHERWISE NOTED.
13. ALL HOSE FAUCETS AND WALL HYDRANTS SHALL BE NOMINAL 3/4" PIPE SIZE UNLESS OTHERWISE NOTED. ALL HOSE VALVES SHALL BE 1 1/2" NOMINAL PIPE SIZE UNLESS OTHERWISE NOTED.
14. ALL HOSE FAUCETS, WALL HYDRANTS, AND OTHER OUTLETS ON NON-POTABLE WATER LINES WHICH COULD BE USED FOR DRINKING OR DOMESTIC USE SHALL BE POSTED AS REQUIRED BY THE APPLICABLE CODES. IN ABSENCE OF A CODE REQUIREMENT, THE OUTLETS SHALL BE POSTED WITH A TAG IN THE SHAPE OF A 4" EQUILATERAL TRIANGLE BEARING THE LEGEND "DANGER: UNSAFE WATER" IN LETTERS NOT LESS THAN 1/2" IN HEIGHT. THIS TAG SHALL BE SECURELY ATTACHED IN A VISIBLE LOCATION DIRECTLY ABOVE OUTLET. THE TAG SHALL BE PAINTED ORANGE AND THE LETTERS BLACK.
15. ALL RELIEF VALVES SHALL BE PIPED TO FLOOR OR BELL-UP DRAINS.
16. SEISMIC RESTRAINTS/BRACING SHALL BE PROVIDED FOR ALL EQUIPMENT, PIPING AND ACCESSORIES IN ACCORDANCE WITH THE LATEST SMACNA SEISMIC RESTRAINT MANUAL AND LOCAL BUILDING CODES. CONTRACTOR SHALL BE RESPONSIBLE FOR ALL SEISMIC SUPPORTS AND ADDITIONAL/MISCELLANEOUS STEEL REQUIRED FOR PROPER INSTALLATION OF SUPPORTS. SUPPORTS AND SEISMIC RESTRAINTS DESIGN SUBMITTALS SHALL BEAR THE STAMP AND SIGNATURE OF AN ENGINEER LICENSED IN STATE OF CALIFORNIA.
17. INSULATION SHALL BE PROVIDED FOR EQUIPMENT AND PIPING SYSTEMS AS INDICATED IN THE SPECIFICATIONS.
18. PLUMBING VENTS OUTLETS SHALL BE LOCATED A MINIMUM OF 10' AWAY FROM ANY OUTSIDE AIR INLET.
19. PIPING SIZES TO EQUIPMENT AND EQUIPMENT SUPPORTS SHALL BE VERIFIED AND ADJUSTED TO MATCH ACTUAL EQUIPMENT FURNISHED.
20. ALL MATERIALS, FITTINGS, COVERS, AND EQUIPMENT INSTALLED IN RETURN AIR PLENUMS SHALL BE NONCOMBUSTIBLE AND UL LISTED FOR USE IN RETURN AIR PLENUMS.

## SYSTEM ABBREVIATIONS

| | | | | | |
|---|---|---|---|---|---|
| **WATER** | | **WASTE** | | **SPECIAL** | |
| NPW | COLD WATER (NON-POTABLE) | CRV | CHEMICAL RESISTANT VENT | A | COMPRESSED AIR |
| CW | COLD WATER | CRW | CHEMICAL RESISTANT WASTE | ACET | ACETYLENE |
| DE | DEIONIZED WATER | CWW | CLEAR WATER WASTE | AR | ARGON |
| DW | DISTILLED WATER | D | INDIRECT DRAIN | H | HYDROGEN |
| F | FIRE PROTECTION WATER | PD | SUMP PUMP DISCHARGE | HE | HELIUM |
| HWC | HOT WATER CIRCULATING (POTABLE) | SAN | SANITARY DRAIN | ME | METHANE |
| NPHW | HOT WATER (NON-POTABLE) | ST | STORM DRAIN | N | NITROGEN |
| HW | HOT WATER (POTABLE) | V | VENT | NO | NITROUS OXIDE |
| PEW | PLANT EFFLUENT WATER | **FUEL GAS** | | OX | OXYGEN |
| PW | POTABLE COLD WATER | NG | NATURAL GAS | VAC | VACUUM |
| SW | SOFTENED WATER | PG | PROPANE GAS | | |
| TNPW | TEMPERED NON-POTABLE WATER | | | | |
| TW | TEMPERED OR BLENDED WATER | | | | |

## SCHEMATIC FITTINGS

- BLIND FLANGE
- CAP
- REDUCER
- SLEEVE
- TP — TEST PLUG
- UNION
- P-TRAP
- VENT THROUGH ROOF (VTR)

## SCHEMATIC VALVES

- ANGLE VALVE
- BACKFLOW PREVENTER W/STRAINER (2" AND SMALLER)
- BACKFLOW PREVENTER
- BACKWATER VALVE
- BALL VALVE
- BUTTERFLY VALVE
- CHECK VALVE
- GATE VALVE
- GLOBE VALVE
- PLUG VALVE
- PRESSURE REDUCING VALVE
- THREE WAY VALVE

## PLUMBING SCHEMATICS

- BELL-UP DRAIN OR FUNNEL RECEPTOR W/ TRAP
- FCO — CLEANOUT (FLOOR)
- CO — CLEANOUT (PIPE)
- HW / CW — BLENDING VALVE
- DOWNSPOUT NOZZLE OR SHOWER
- EMERGENCY SHOWER/EYEWASH
- FLOOR DRAIN
- P-TRAP
- ROOF DRAIN
- SPLASHBLOCK
- A — WATER HAMMER ARRESTOR W/ PDI SIZE DESIGNATION

## SCHEMATICS SPECALTIES

- AUTOMATIC VALVE STATION
- S — BASKET STRAINER
- COMBINATION PUMP DISCHARGE VALVE
- FLEXIBLE CONNECTION
- FLOW CONTROL VALVE
- FLOW SENSOR METER
- HF — HOSE FAUCET
- HF — HOSE FAUCET W/ VACUUM BREAKER
- HOSE VALVE W/ HOSE NIPPLE
- AIR VENT
- PRS — PRESSURE REDUCING STATION
- PRESSURE RELIEF VALVE
- PRESSURE/TEMPERATURE RELIEF VALVE
- Q — QUICK COUPLING
- ROTAMETER
- SIGHT FLOW INDICATOR
- SUCTION DIFFUSER (SCHEMATIC)
- TP — TRAP PRIMER
- WH — WALL HYDRANT W/ VACUUM BREAKER
- M — METER
- S — WYE STRAINER
- S — WYE STRAINER W/ BLOWOFF
- VACUUM BREAKER

## SCHEMATICS

- AIR-GAP FITTING
- BELL-UP DRAIN OR FUNNEL RECEPTOR
- FLOOR CLEANOUT
- FLOOR DRAIN
- FLOOR DRAIN W/ FUNNEL

## CONTROLS AND INSTRUMENTATION

- FS — FLOW SWITCH
- GAUGE ACTIVATOR/ISOLATOR
- LS — LEVEL SWITCH
- P — PRESSURE GAUGE W/ SHUTOFF VALVE
- S — SOLENOID OPERATOR
- THERMOMETER - DIAL TYPE
- THERMOMETER - STEM TYPE
- V — VACUUM GAUGE W/ SHUTOFF VALVE

# COASTAL DEVELOPMENT PERMIT PLANS

| NO. | BY | CHK | APP |
|---|---|---|---|
| B | MDS | RWC | AEC |

60% SUBMITTAL — REVISIONS AND RECORD OF USE

DATE: 7/30/2019

BLACK & VEATCH

JOINT VENTURE

FILANC

BLACK & VEATCH

CITY OF MORRO BAY
MORRO BAY WRF
RECLAMATION FACILITY (WRF)

PLUMBING
LEGEND, ABBREVIATIONS AND GENERAL NOTES

DESIGNED: SM
DETAILED: MDS
CHECKED: AEC
APPROVED:
DATE: 7/30/2019

0 1/2 1
IF THIS BAR DOES NOT MEASURE 1" THEN DRAWING IS NOT TO FULL SCALE

PROJECT NO. 400530

00-P-001
SHEET
OF

PLOTTED: 7/30/2019 2:50:44 PM
D400530

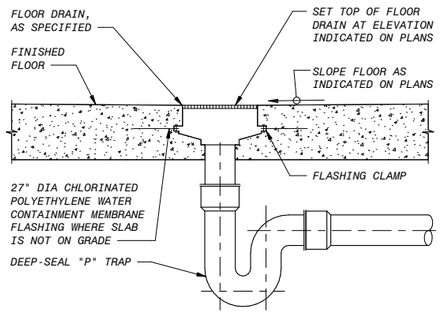


A FLOOR DRAIN - NEW FLOOR
NO SCALE

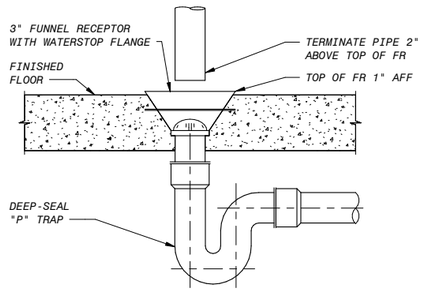


B FUNNEL DRAIN - NEW FLOOR
NO SCALE

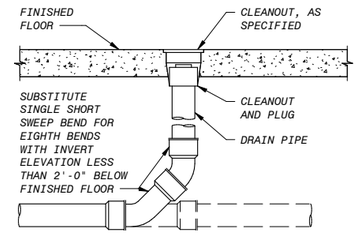


C FLOOR CLEANOUT - NEW FLOOR
NO SCALE

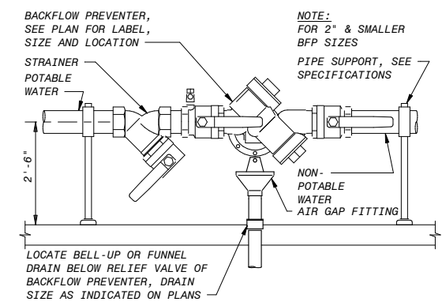


D BACKFLOW PREVENTER
NO SCALE

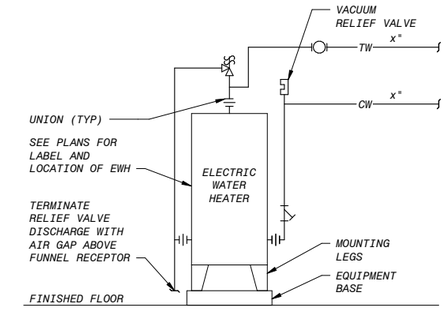


E INSTANTANEOUS - WATER HEATER
NO SCALE

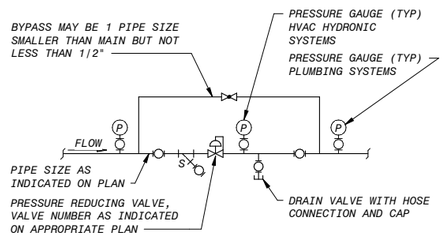


NOTES:
1. PROVIDE REDUCING FITTINGS AT PRESSURE REDUCING VALVE AND ON BYPASS AS REQUIRED.
2. PROVIDE VALVES PER SPECIFICATIONS.

F PRESSURE REDUCING STATION
NO SCALE

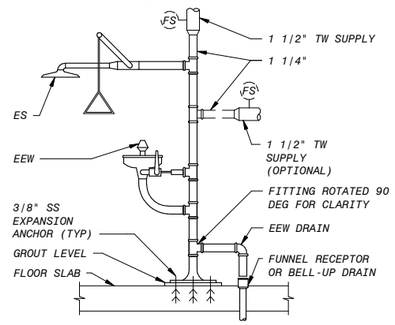


G EMERGENCY SHOWER AND EYE WASH
NO SCALE

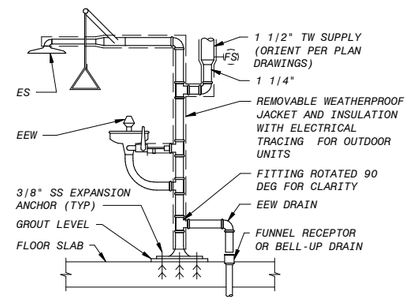


H EMERGENCY SHOWER AND EYE WASH
NO SCALE

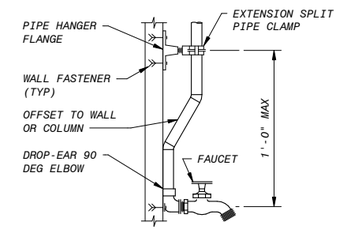


NOTES:
1. PROVIDE VACUUM BREAKER ON HOSE FAUCETS WHERE INDICATED ON THE PLANS.
2. SEE PLANS AND SPECIFICATIONS FOR PIPE DIAMETERS.

J HOSE FAUCET PIPE MOUNTING
NO SCALE

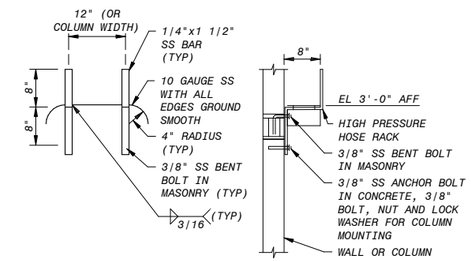


K WALL OR COLUMN MOUNTED HOSE RACK
NO SCALE

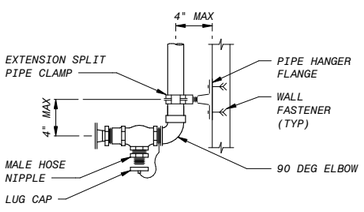


NOTES:
1. SEE PLANS AND SPECIFICATIONS FOR PIPE DIAMETERS.
2. LUG CAPS AND CHAINS SHALL BE PROVIDED ON HOSE VALVES LOCATED OUTDOORS.

L HOSE VALVE PIPE MOUNTING
NO SCALE

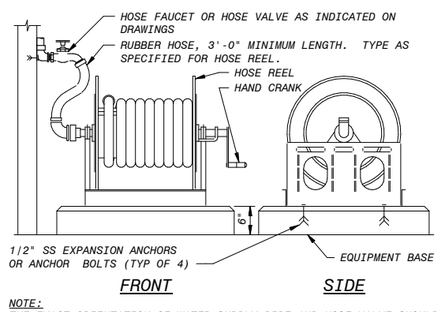


NOTE:
THE EXACT ORIENTATION OF WATER SUPPLY PIPE AND HOSE VALVE SHOULD BE AS REQUIRED TO SUIT THE SPECIFIC INSTALLATION.

M HOSE REEL
NO SCALE

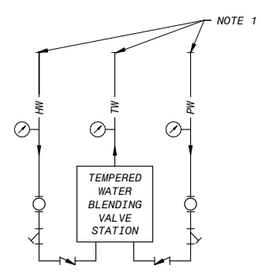


NOTE:
1. SEE PLANS FOR VARIES PIPE SIZES.

N ES/EEW WATER BLENDING VALVE
NO SCALE

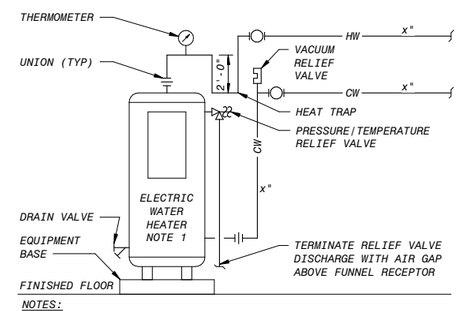


NOTES:
1. SEE PLANS FOR VARIES ELECTRIC WATER HEATER TAG NUMBERS.

P ELECTRIC WATER HEATER PIPING SCHEMATIC
NO SCALE

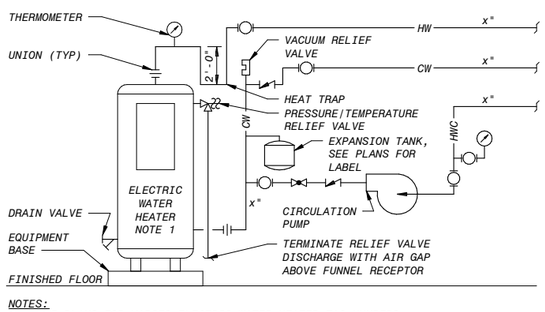


NOTES:
1. SEE PLANS FOR VARIES ELECTRIC WATER HEATER TAG NUMBERS.

Q ELECTRIC WATER HEATER PIPING SCHEMATIC
NO SCALE

COASTAL DEVELOPMENT PERMIT PLANS

| NO. | BY | CHK | APP |
|---|---|---|---|
| B | MDS | RWC | AEC |

REVISIONS AND RECORD OF USE

60% SUBMITTAL

DATE 7/30/2019

BLACK & VEATCH

JOINT VENTURE

FILANC

BLACK & VEATCH

CITY OF MORRO BAY
MORRO BAY WRF
RECLAMATION FACILITY (WRF)

PLUMBING DETAILS

DESIGNED: SM
DETAILED: MDS
CHECKED: AEC
APPROVED:
DATE: 7/30/2019

0 1/2 1
IF THIS BAR DOES NOT MEASURE 1" THEN DRAWING IS NOT TO FULL SCALE

PROJECT NO. 400530

00-P-501
SHEET
OF

PLOTTED: 7/30/2019 1:18:27 PM
D400530

## GENERAL SHEET NOTES

**PLUMBING EQUIPMENT SCHEDULE:**
ACCESSORIES: NONE

NOTES:
1 - SWITCH TO GAS HEATER IF NATURAL GAS IS AVAILABLE.
2 - PLAN TO COMBINE WATER HEATER FOR RO & UV BUILDING & CHEMICAL FACILTIY.
3 - CURRENTLY ON HOLD AWAITING FOR CONFIRMATION.

**PLUMBING FIXTURE SCHEDULE:**
ACCESSORIES: NONE

NOTES:
1 - FIXTURE AND INSTALLATION SHALL BE ADA COMPLIANT.
2 - TEMPERED WATER SUPPLY.
3 - LOCAL AND REMOTE ALARM SYSTEM.
4 - SCALD PROTECTION BLEED VALVE.

### BACKFLOW PREVENTER SCHEDULE

| UNIT NUMBER | SERVICE | BODY SIZE (IN) | MAXIMUM FLOW (GPM) | MAXIMUM PD (PSI) | MANUFACTURER / MODEL | NOTES |
|---|---|---|---|---|---|---|
| 50-PLUM-BFP-0001 | RO & UV BUILDING | 1.0 | 60 | 13 | WATTS/FEBCO LF860/1 LF860-QT RP | --- |
| 90-PLUM-BFP-0001 | CHEMICAL BUILDING | 1.5 | 120 | 13 | WATTS/FEBCO LF860/1 1/2 LF860-QT RP | --- |
| 95-PLUM-BFP-0001 | OPERATIONS BUILDING | 1.0 | 60 | 13 | WATTS/FEBCO LF860/1 LF860-QT RP | --- |
| 96-PLUM-BFP-0001 | MAINTENANCE BUILDING | 2.0 | 120 | 13 | WATTS/FEBCO LF860/2 LF860-QT RP | --- |

### PIPING ACCESSORIES SCHEDULE

| UNIT NUMBER | DESCRIPTION | MANUFACTURER / MODEL | NOTES |
|---|---|---|---|
| FCO-1 | HEAVY DUTY FLOOR CLEANOUT, SECURED ROUND ADJUSTABLE NICKEL BRONZE TOP. | SMITH 4111 SERIES | --- |
| FD-1 | MEDIUM DUTY CAST IRON FLOOR DRAIN, ADJUSTABLE TOP, LOOSE SET CAST IRON GRATE. | SMITH 2310 SERIES | --- |
| FD-8 | HEAVY DUTY CAST IRON FLOOR DRAIN, 12" DIAMETER TRACTOR GRATE. | SMITH 2141 SERIES | --- |
| FR-1 | MEDIUM DUTY CAST IRON FUNNEL RECEPTOR, WATERSTOP FLANGE, THREADED OR NO HUB CONNECTION. | SMITH 3800 SERIES | --- |
| FS-1 | CAST IRON FLOOR SINK, 8" DIAMETER TOP, DOME BOTTOM STRAINER. | SMITH 3030 SERIES | --- |

### PLUMBING EQUIPMENT SCHEDULE0065

| UNIT NUMBER | DESCRIPTION | MANUFACTURER | NOTES |
|---|---|---|---|
| 50-PLUM-ET-0001 | EXPANSION TANK, PIPELINE MOUNTED, 14 GALLON, PRECHARGE TO 80 PSIG. | AMTROL THERM-X-TROL ST-C SERIES | --- |
| 50-PLUM-EWH-0001 | ELECTRIC WATER HEATER, INDUSTRIAL GRADE, 119 GALLONS STORAGE 2 NOS., 221 GPH RECOVERY AT 100 FRISE, 54 KW, 480 VOLT, 3 PHASE, 60 HZ. | STATE CSB 120 54 SFE | 1 |
| 50-PLUM-TP-0001 | ELECTRONIC TRAP PRIMING MANIFOLD, SURFACE MOUNTED, 3/4" NPT INLET, 1/2" TUBE CONNECTIONS, 120 VOLT, 1 PHASE, 60 HZ. SERVE FLOOR DRAIN IN RO/UV ROOM (22 CONNECTION) | PRECISION PLUMBING PRODUCTS, INC. PRIME-TIME PT-22 | --- |
| 90-PLUM-EWH-0001 | ELECTRIC WATER HEATER, TANKLESS WITH MOUNTING LEGS, 108 KW,480 VOLT, 3 PHASE, 60 HZ. OUTDOOR UNIT SHALL BE PROVIDED WITH FREEZE PROTECTION PACKAGE. | KELTECH SNA SERIES | 1,3 |
| 95-PLUM-CP-0001 | IN-LINE HOT WATER CIRCULATING PUMP, 1 GPM, 7 FEET HEAD, 120 VOLT, 1 PHASE, 60 HZ. | BELL & GOSSETT NBF-22 | --- |
| 95-PLUM-ET-0001 | EXPANSION TANK, PIPELINE MOUNTED, 14 GALLON, PRECHARGE TO 80 PSIG. | AMTROL THERM-X-TROL ST-C SERIES | --- |
| 95-PLUM-EWH-0001 | ELECTRIC WATER HEATER, INDUSTRIAL GRADE, 119 GALLONS STORAGE, 123 GPH RECOVERY AT 100 F RISE, 30 KW, 480 VOLT, 3 PHASE, 60 HZ. | STATE CSB 120 30 SFE | 1 |
| 95-PLUM-TP-0001 | ELECTRONIC TRAP PRIMING MANIFOLD, SURFACE MOUNTED, 3/4" NPT INLET, 1/2" TUBE CONNECTIONS, 120 VOLT, 1 PHASE, 60 HZ. SERVE FLOOR DRAIN IN MENS LOCKER ROOM (12 CONNECTION) | PRECISION PLUMBING PRODUCTS, INC. PRIME-TIME PT-12 | --- |
| 96-PLUM-ET-0001 | EXPANSION TANK, PIPELINE MOUNTED, 8 GALLON, PRECHARGE TO 80 PSIG. | AMTROL THERM-X-TROL ST-C SERIES | --- |
| 96-PLUM-EWH-0001 | ELECTRIC WATER HEATER, INDUSTRIAL GRADE, 119 GALLONS STORAGE, 111 GPH RECOVERY AT 100 F RISE, 27 KW, 480 VOLT, 3 PHASE, 60 HZ. | STATE CSB 120 27 SFE | 1 |
| 96-PLUM-TP-0001 | ELECTRONIC TRAP PRIMING MANIFOLD, SURFACE MOUNTED, 3/4" NPT INLET, 1/2" TUBE CONNECTIONS, 120 VOLT, 1 PHASE, 60 HZ. SERVE FLOOR DRAIN IN MAINTENANCE ROOM (12 CONNECTION) | PRECISION PLUMBING PRODUCTS, INC. PRIME-TIME PT-12 | --- |
| HR-1 | HOSE REEL WITH 1 1/2" SWIVEL WATER SUPPLY AND 100 FEET TYPE 1 HOSE. | HANNAY 3528-25-26 | --- |

### PRESSURE REDUCING VALVE SCHEDULE

| UNIT NUMBER | SERVICE | TYPE | FLOW RATE (GAS-SCFH) | | | REDUCED PRESSURE SETPOINT(IN WC) | INLET PRESSURE (IN WC) | | MINIMUM PRESSURE AT MAXIMUM FLOW (IN WC) | NOTES |
|---|---|---|---|---|---|---|---|---|---|---|
| | | | MINIMUM | MAXIMUM | ORDINARY | | MINIMUM | MAXIMUM | | |
| 50-PLUM-G-0001 | UV/RO BUILDING | DIRECT ACTING | 0 | 0 | 113 | 14 | 0 | 5 | 11 | --- |
| 96-PLUM-G-0001 | MAINTENANCE BUILDING | DIRECT ACTING | 0 | 0 | 113 | 14 | 0 | 5 | 11 | --- |

### PLUMBING FIXTURE SCHEDULE

| LABEL | DESCRIPTION | MANUFACTURER / MODEL | WATER | | SANITARY | | NOTES |
|---|---|---|---|---|---|---|---|
| | | | HOT | COLD | WASTE | VENT | |
| WC-1 | WATER CLOSET, FLOOR MOUNT, FLUSH VALVE, 1.28 GALLON/FLUSH MAX. | AMERICAN STANDARD 3517A.101 RIGHT HEIGHT ELONGATED BOWL | --- | 1" | 4" | 2" | --- |
| UR-1 | URINAL, WALL MOUNT, FLUSH VALVE, 0.5 GALLON/FLUSH MAX. | AMERICAN STANDARD 6590.005 WASHBROOK FLOWISE | --- | 3/4" | 2" | 1 1/2" | --- |
| L-1 | LAVATORY, WALL HUNG 21"x18", WITH [1.5] [0.5] GPM AERATED FAUCET AND POP-UP DRAIN. | LAV: AMERICAN STANDARD 0355.012 LUCERNE<br>FAUCET: AMERICAN STANDARD 7385.000 RELIANT 3 | 1/2" | 1/2" | 1 1/2" | 1 1/2" | 1 |
| MS-1 | MOP SINK, 24"x24", 12" DEEP, FLOOR MOUNTED, THREE SPLASH PANELS. | SINK: STERN-WILLIAMS HL-1810-BP3<br>FAUCET: AMERICAN STANDARD 8354.112 | 1/2" | 1/2" | 3" | 2" | --- |
| EWC-1 | ELECTRIC WATER COOLER, WALL MOUNTED, 8 GPH, 120 VOLT, 1 PHASE, 60 HZ. | ELKAY EZS8 | --- | 1/2" | 1 1/2" | 1 1/2" | 1 |
| S-1 | SAMPLE SINK, 24"x24", FREE STANDING, 14" DEEP, 14 GAUGE STAINLESS STEEL, 2" DRAIN, 24" RIGHT & LEFT DRAIN BOARD, STAINLESS STEEL LEGS. | SINK: ELKAY WNSF8124<br>DRAIN: ELKAY LK25 RT | --- | --- | 2" | 2" | --- |
| SS-1 | SERVICE SINK, 24"x20", WALL MOUNTED,CAST IRON,SINGLE BOWL,BLANK BACK,WALL MOUNTED FAUCET FOR EXPOSED OVERHEAD SUPPLIES | SINK: AMERICAN STANDARD 7695.000 AKRON<br>FAUCET: CHICAGO FAUCET 835 | 1/2" | 1/2" | 3" | 1 1/2" | --- |
| LS | LAB SINK, SEE LAB SPEC SECTION FOR DETAILS. | --- | 1/2" | 1/2" | 1 1/2" | 1 1/2" | --- |
| CS | CUP SINK, SEE LAB SPEC SECTION FOR DETAILS. | --- | 1/2" | 1/2" | 1 1/2" | 1 1/2" | --- |
| ES/EEW-1 | EMERGENCY SHOWER/EYE/FACE WASH COMBINATION, PEDESTAL MOUNTED, 1 1/4" IPS SUPPLY. | HAWS 8300-8309 | --- | 1 1/4" | --- | --- | 2,3,4 |
| ES/EEW-2 | EMERGENCY SHOWER/EYE/FACE WASH COMBINATION, FROST-PROOF TO -30 F, PEDESTAL MOUNTED, 1 1/4" IPS SUPPLY, 120 VOLT. WITH FREEZE PROTECTION BLEED VALVE AND SCALD PROTECTION BLEED VALVE. | HAWS 8317 CTFP | --- | 1 1/4" | --- | --- | 2,3,4 |

COASTAL DEVELOPMENT PERMIT PLANS

| NO. | BY | CHK | APP |
|---|---|---|---|
| B | MDS | RWC | AEC |

60% SUBMITTAL
REVISIONS AND RECORD OF USE
DATE 7/30/2019

BLACK & VEATCH
JOINT VENTURE
FILANC
BLACK & VEATCH

CITY OF MORRO BAY
MORRO BAY WRF
RECLAMATION FACILITY (WRF)

PLUMBING SCHEDULE

DESIGNED: SM
DETAILED: MDS
CHECKED: AEC
APPROVED:
DATE: 7/30/2019

0 1/2 1
IF THIS BAR DOES NOT MEASURE 1" THEN DRAWING IS NOT TO FULL SCALE

PROJECT NO. 400530

00-P-601
SHEET
OF

PLOTTED: 7/30/2019 1:18:27 PM
D400530

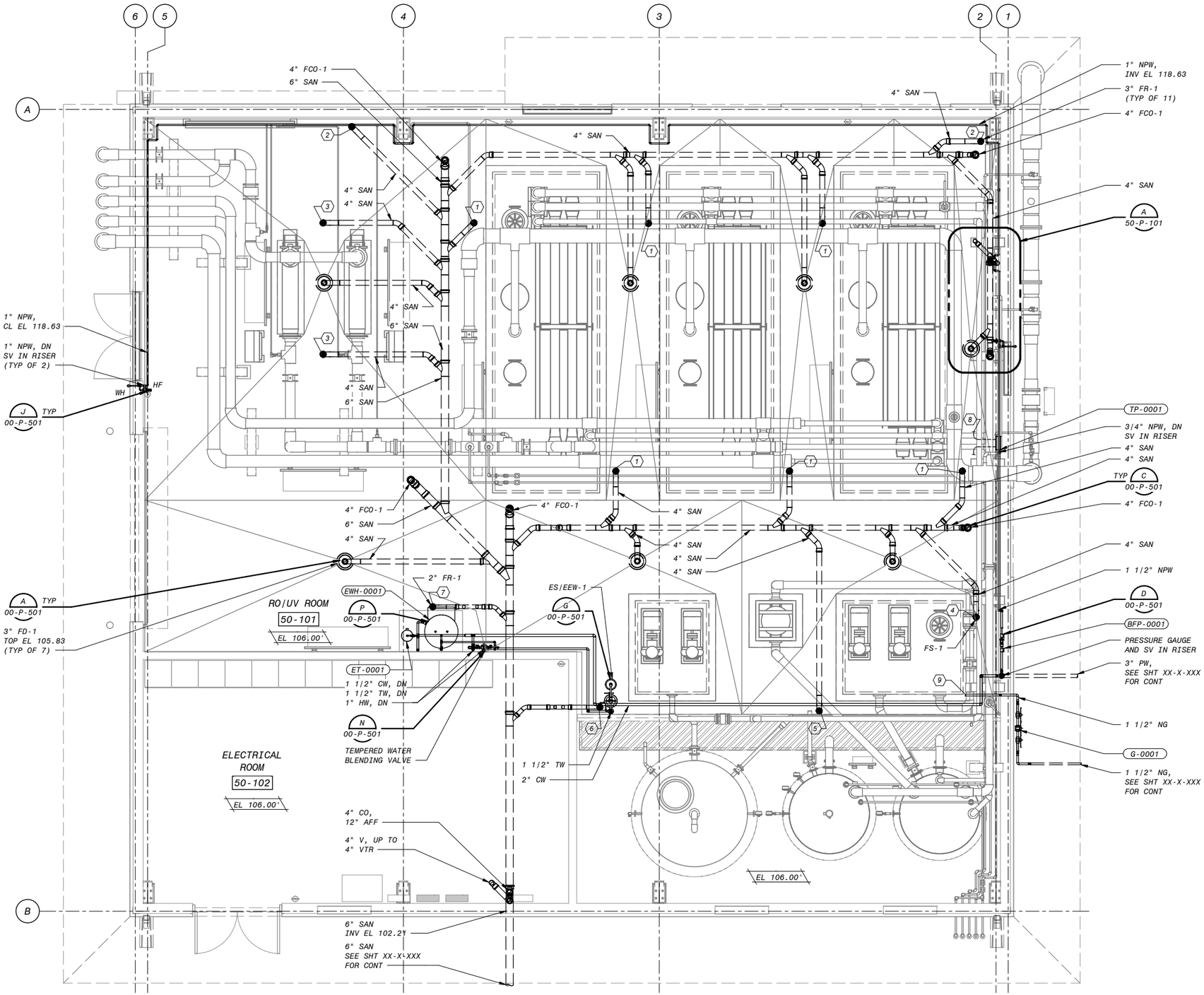


PLAN

1/4" = 1'-0"

## SHEET KEYNOTES

1. 3" FR FOR SKID EQUIPMENT DRAIN. FOR CONT SEE SHT 50-I-001.
2. 3" FR FOR ANALYZER PANEL DRAIN. FOR CONT SEE SHT 52-I-001.
3. 3" FR FOR UV EQUIPMENT DRAIN. FOR CONT SEE SHT 52-I-001.
4. 3" FS-1 FOR CIP CARTRIDGE FILTER DRAIN. FOR CONT SEE SHT 51-I-010.
5. 3" FR FOR NEUTRALIZATION TANK DRAIN. FOR CONT SEE SHT 51-I-011.
6. 3" FR FOR ES-EEW-1 DRAIN.
7. 2" FR FOR ELECTRICAL WATER HEATER DRAIN.
8. 1/2" TRAP PRIMER PIPING TO ALL FD AND FR.
9. 1 1/2" NG, CAPPED CONNECTION FOR FUTURE USE.

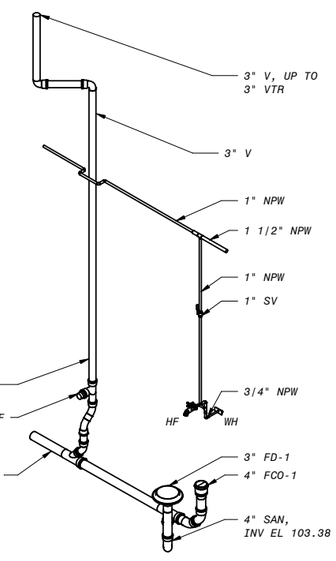


A ENLARGED ISOMETRIC

NO SCALE

4' 2' 0' 4' 8'

1/4" = 1'-0"

# COASTAL DEVELOPMENT PERMIT PLANS

| NO. | BY | CHK | APP |
|---|---|---|---|
| B | MDS | RWC | AEC |

605 SUBMITTAL

REVISIONS AND RECORD OF USE

DATE 7/30/2019

BLACK & VEATCH

JOINT VENTURE

FILANC

BLACK & VEATCH

CITY OF MORRO BAY
MORRO BAY WRF
RECLAMATION FACILITY (WRF)

RO/UV BUILDING
PLUMBING
PLAN

DESIGNED: SM
DETAILED: MDS
CHECKED: AEC
APPROVED:
DATE: 7/30/2019

0 1/2 1

IF THIS BAR DOES NOT MEASURE 1" THEN DRAWING IS NOT TO FULL SCALE

PROJECT NO. 400530

50-P-101

SHEET OF

PLOTTED: 7/30/2019 1:25:18 PM

D400530

## SHEET KEYNOTES

1. INSULATE AND HEAT TRACE EXPOSED LINE. REFERENCE SPEC 200511 AND 260511 FOR ADDITIONAL REQUIREMENTS.
2. ROUTE TW AND NPW LINE ON TOP OF CONTAINMENT WALL.

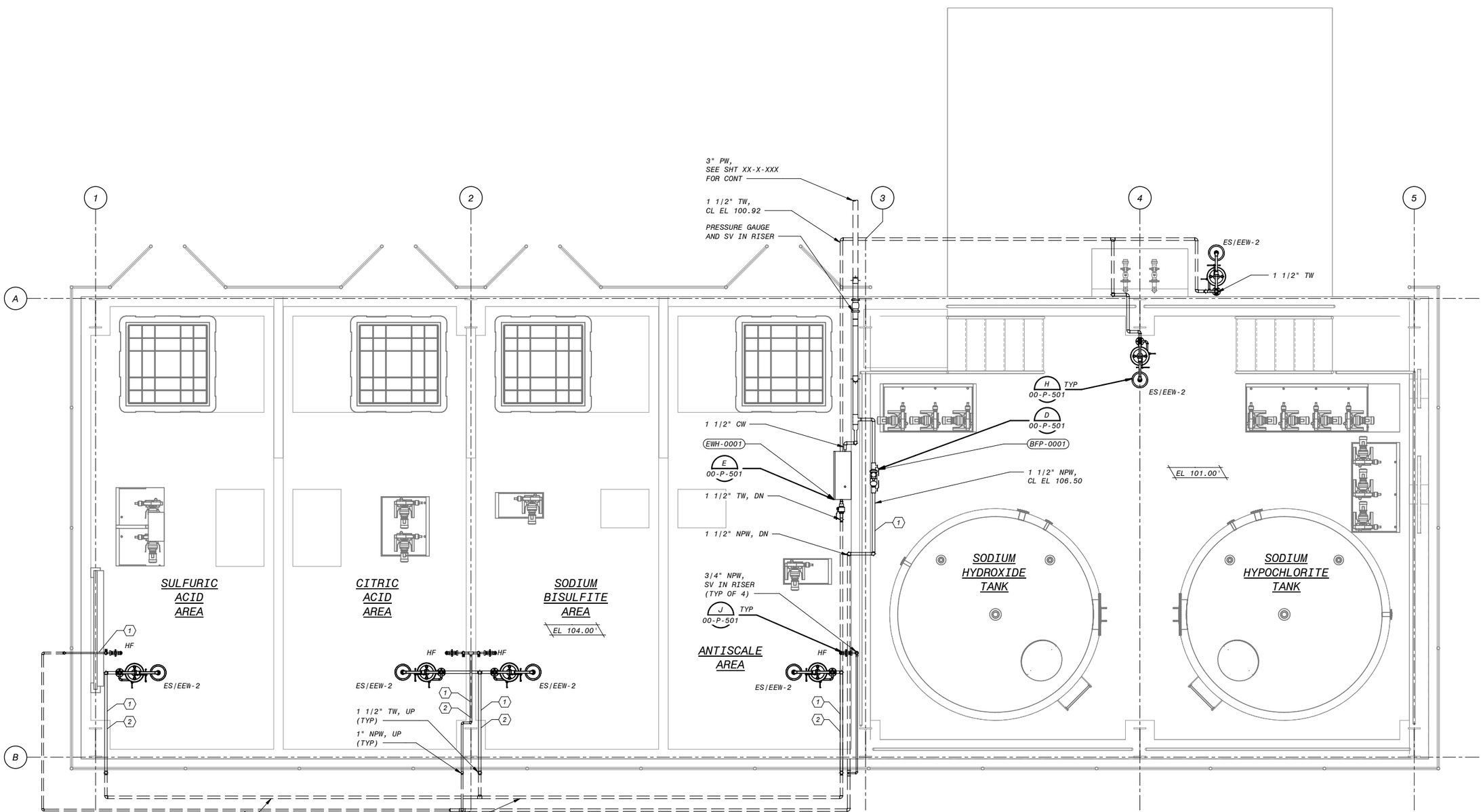


PLAN
3/8" = 1'-0"

12" 0' 1' 2' 3' 4' 5' 6' 7'
3/8" = 1'-0"

# COASTAL DEVELOPMENT PERMIT PLANS

| NO. | BY | CHK | APP |
|---|---|---|---|
| B | MDS | RVC | AEC |

60% SUBMITTAL
REVISIONS AND RECORD OF USE
DATE 7/30/2019

BLACK & VEATCH
JOINT VENTURE
FILANC
BLACK & VEATCH

CITY OF MORRO BAY
MORRO BAY WRF
RECLAMATION FACILITY (WRF)

CHEMICAL FACILITY
PLUMBING
PLAN

DESIGNED: SM
DETAILED: MDS
CHECKED: AEC
APPROVED:
DATE: 7/30/2019

0 1/2 1
IF THIS BAR DOES NOT MEASURE 1" THEN DRAWING IS NOT TO FULL SCALE

PROJECT NO. 400530

90-P-101
SHEET
OF

PLOTTED: 7/30/2019 1:31:18 PM
D400530

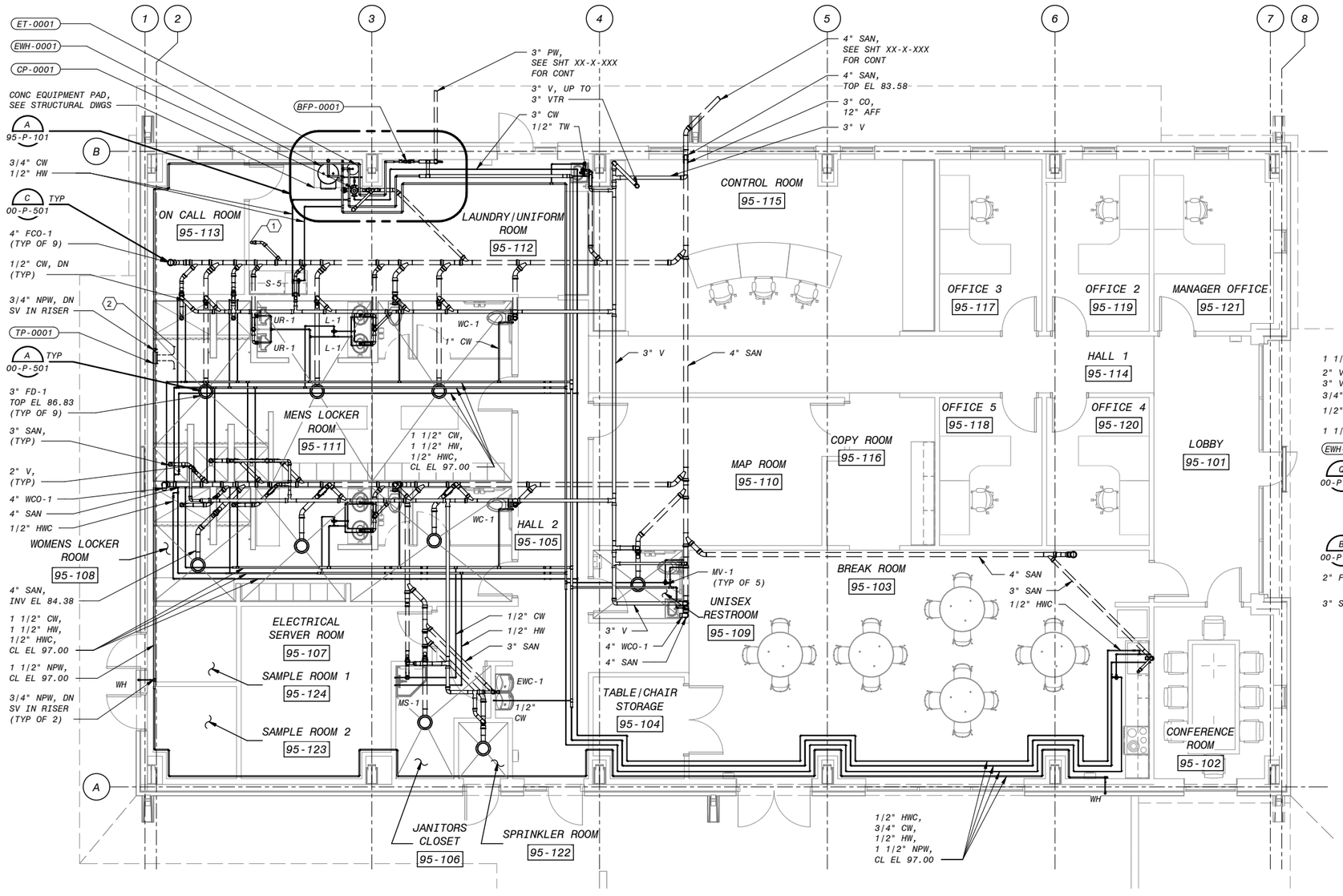


PLAN

3/16" = 1'-0"

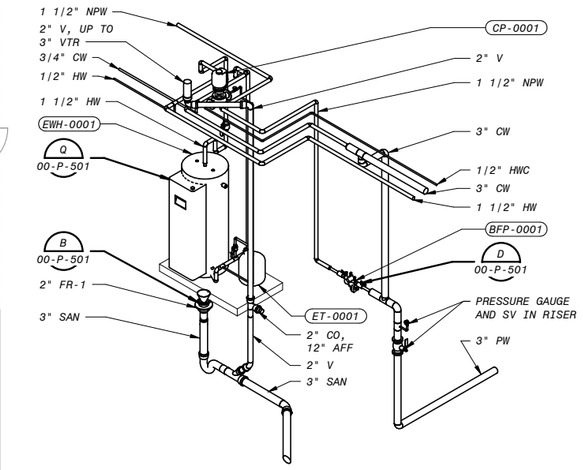


A ENLARGED ISOMETRIC

NO SCALE

## SHEET KEYNOTES

1. 2" SAN PIPE CAPED AT 12" AFF FOR WASHING MACHINE.
2. 1/2" TRAP PRIMER PIPING TO ALL FD AND FR.

| NO. | BY | CHK | APP |
|---|---|---|---|
| B | MDS | RWC | AEC |

60% SUBMITTAL — REVISIONS AND RECORD OF USE — DATE 7/30/2019

BLACK & VEATCH

JOINT VENTURE

FILANC

BLACK & VEATCH

CITY OF MORRO BAY
MORRO BAY WRF
RECLAMATION FACILITY (WRF)

OPERATIONS BUILDING
PLUMBING
PLAN

DESIGNED: SM
DETAILED: MDS
CHECKED: AEC
APPROVED:
DATE: 7/30/2019

0 1/2 1
IF THIS BAR DOES NOT MEASURE 1" THEN DRAWING IS NOT TO FULL SCALE

PROJECT NO. 400530

95-P-101
SHEET
OF

6" 4' 2' 0' 5' 10'
3/16" = 1'-0"

COASTAL DEVELOPMENT PERMIT PLANS

PLOTTED: 7/30/2019 1:37:54 PM
D400530

## GENERAL NOTES

1. PLUMBING DESIGN IN THIS SPACE TO BE DETERMINED WHEN LABORATORY DESIGN IS COMPLETED IN THE NEXT PHASE.

## SHEET KEYNOTES

1. 2" FR FOR BFP-95-001.
2. 2" FR FOR EWH-95-001.
3. 1 1/2" NG, SEE SHT XX-X-XXX FOR CONT.
4. 1" CW, 1 1/2" TW, 1" HW, FOR FUTURE LABORATORY SERVICES.
5. 1/2" TRAP PRIMER PIPING TO ALL FD AND FR.

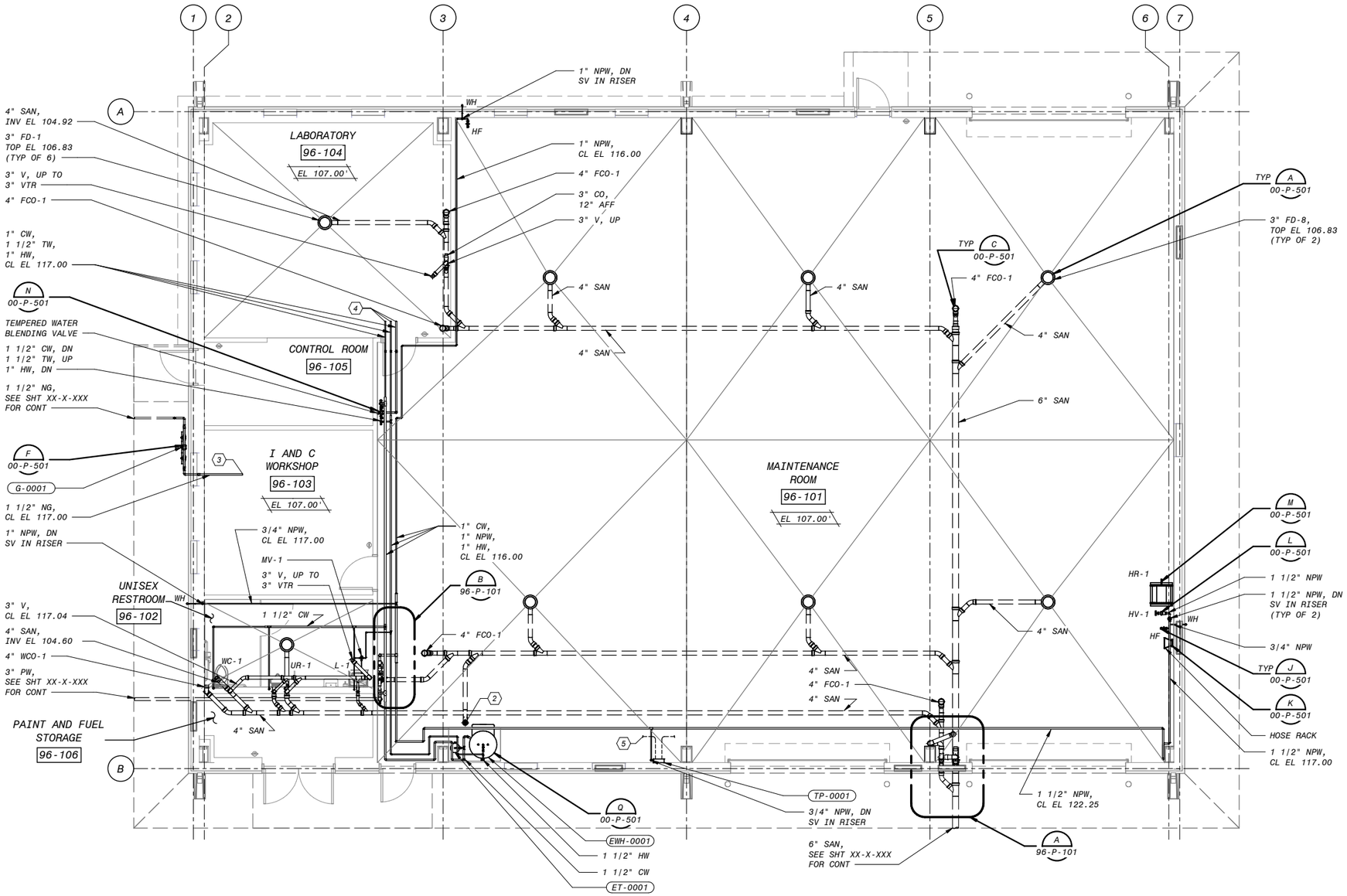


PLAN
3/16" = 1'-0"

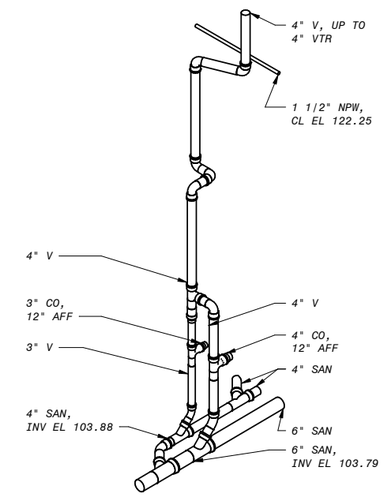


A ENLARGED ISOMETRIC
NO SCALE

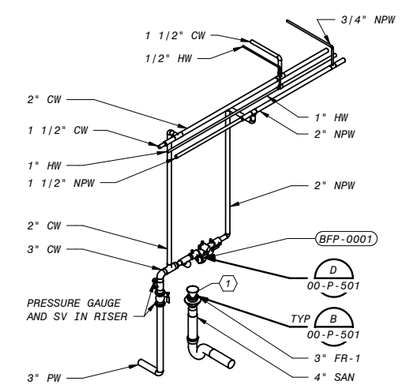


B ENLARGED ISOMETRIC
NO SCALE

6" 4' 2' 0' 5' 10'
3/16" = 1'-0"

COASTAL DEVELOPMENT PERMIT PLANS

| NO. | BY | CHK | APP |
|---|---|---|---|
| B | MDS | RWC | AEC |

60% SUBMITTAL
REVISIONS AND RECORD OF USE
DATE 7/30/2019

BLACK & VEATCH
JOINT VENTURE
FILANC
BLACK & VEATCH

CITY OF MORRO BAY
MORRO BAY WRF
RECLAMATION FACILITY (WRF)

MAINTENANCE BUILDING
PLUMBING
PLAN

DESIGNED: SM
DETAILED: MDS
CHECKED: AEC
APPROVED:
DATE: 7/30/2019

0 1/2 1
IF THIS BAR DOES NOT MEASURE 1" THEN DRAWING IS NOT TO FULL SCALE

PROJECT NO.
400530

96-P-101
SHEET
OF

PLOTTED: 7/30/2019 2:03:21 PM
D400530

## SYSTEM ABBREVIATIONS

| | |
|---|---|
| CWR | CHILLED WHATER RETURN |
| CWS | CHILLED WATER SUPPLY |
| C | CONDENSATE DRAIN |
| CDWR | CONDENSER WATER RETURN |
| CDWS | CONDENSER WATER SUPPLY |
| HWR | HEATING WATER RETURN |
| HWS | HEATING WATER SUPPLY |
| LPC | LOW PRESSURE CONDENSATE |
| LPS | LOW PRESSURE STEAM (<15 PSIG) |
| R | REFRIGERANT |

## HVAC LEGEND

| | |
|---|---|
| | DIFFUSER FOR FLEXIBLE DUCT |
| 30"x20"(L) | DUCTWORK DIMENSIONS, THE FIRST DIMENSION IS THE SIDE SEEN OR SIDE THE LEADER LINE TOUCHES. SEE GENERAL MECHANICAL NOTES. |
| | FLEXIBLE CONNECTION |
| | FLEXIBLE DUCTWORK |
| UP / DN | INCLINED RISE (UP) OR DROP (DN) IN RESPECT TO DIRECTION OF AIRFLOW |
| | NEGATIVE PRESSURE DUCT |
| | POSITIVE PRESSURE DUCT |
| | REGISTER, GRILLE OR DIFFUSER |
| | ROUND OR FLEXIBLE DUCT TAKEOFF |
| | ROUND TO SQUARE TRANSITION |
| | TURNING VANES |

## AIR INLET & OUTLET IDENTIFICATIONS

24"x10"-10"
SR-1-760

- SIZE-LENGTH BY WIDTH (INCHES)
- FLEXIBLE DUCT DIAMETER (INCHES, IF USED)
- CFM THRU DEVICE
- DEVICE DESIGNATION
- DEVICE GROUP: R-REGISTER, G-GRILLE, D-DIFFUSER
- DEVICE TYPE: S-SUPPLY, E-EXHAUST, R-RETURN, T-TRANSFER

## CONTROLS & INSTRUMENTATION LEGEND

| | |
|---|---|
| CS | CONTROL STATION |
| DG | DRAFT GAUGE |
| E E | ELECTRIC OPERATOR (EXPLOSION PROOF) |
| E M | ELECTRIC OPERATOR (MODULATING) |
| E | ELECTRIC OPERATOR (2 POSITION) |
| EVS 1 | EMERGENCY VENTILATION SWITCH W/ NUMBER |
| FS | FLOW SWITCH |
| | GAUGE ACTIVATOR/ISOLATOR |
| H 1 | HUMIDISTAT W/ NUMBER |
| LS | LEVEL SWITCH |
| PDS 1 | PRESSURE DIFFERENTIAL SWITCH W/ NUMBER |
| P | PRESSURE GAUGE W/ SHUTOFF VALVE |
| PS | PRESSURE SWITCH |
| SMD 1 | SMOKE DETECTOR W/ NUMBER |
| S | SOLENOID OPERATOR |
| | THERMOMETER - DIAL TYPE |
| | THERMOMETER - STEM TYPE |
| TS 1 | TEMPERATURE SENSOR WITH NUMBER |
| T 1 | THERMOSTAT WITH NUMBER |
| V | VACUUM GAUGE W/ SHUTOFF VALVE |

## MECHANICAL ABBREVIATIONS

### A

| | |
|---|---|
| A | ALARM |
| AC | AIR COMPRESSOR |
| ACCU | AIR COOLED CONDENSING UNIT |
| AD | ACCESS DOOR |
| AF | AIR FLOW, AIRFOIL |
| AFD | ADJUSTABLE FREQUENCY DRIVE |
| AFF | ABOVE FINISH FLOOR |
| AFM | AIR FLOW MONITOR |
| AHU | AIR HANDLING UNIT |
| ALUM | ALUMINUM |
| AP | ACCESS PANEL |
| APPROX | APPROXIMATE |
| AS | AIR SEPARATOR |
| ATU | AIR TERMINAL UNIT |
| AUTO | AUTOMATIC |
| AVG | AVERAGE |

### B

| | |
|---|---|
| B | BELT DRIVE, BLOW THROUGH |
| BDD | BACKDRAFT DAMPER |
| BF | BLIND FLANGE |
| BFF | BELOW FINISH FLOOR |
| BFP | BACKFLOW PREVENTER |
| BH | BASEBOARD HEATER |
| BI | BACKWARD INCLINED, BUILT-IN THERMOSTAT |
| BL | BOTTOM LEVEL |
| BLDG | BUILDING |
| BLR | BLOWER |
| BOD | BOTTOM OF DUCT ELEVATION |
| BOT | BOTTOM |
| BTUH | BRITISH THERMAL UNITS PER HOUR |
| BU | BELL-UP |
| BV | BALL VALVE |

### C

| | |
|---|---|
| C | CHANNEL, CONVECTOR, COOLING, COOLING (MAKE ON RISE) |
| CB | CENTRIFUGAL BLOWER |
| CBD | COUNTERBALANCE BACKDRAFT DAMPER |
| CC | COOLING COIL |
| CD | CONTROL DAMPER |
| CDWP | CONDENSER WATER PUMP |
| CENTR | CENTRIFUGAL |
| CF | CABINET FAN |
| CFM | CUBIC FEET PER MINUTE |
| CH | CONVECTION HEATER |
| C/L | CENTERLINE |
| CO | CLEANOUT |
| CONC | CONCRETE |
| CONN | CONNECTION |
| CONT | CONTINUATION |
| CS | CONTROL STATION |
| CT | COOLING TOWER |
| CU | CONDENSING UNIT |
| CV | CHECK VALVE, CONTROL VALVE |
| CWP | CHILLED WATER PUMP |

### D

| | |
|---|---|
| D | DIRECT DRIVE, DRAW-THRU |
| DB | DRY BULB |
| DDC | DIRECT DIGITAL CONTROL |
| DEH | DEHUMIDIFIER |
| DF | DUCT FAN |
| DIA | DIAMETER |
| DM | DUCT MOUNTED |
| DN | DOWN |
| DX | DIRECT EXPANSION |

### E

| | |
|---|---|
| E | ELECTRIC, ELECTRIC OPERATOR, EXHAUST |
| EA | EACH, EXHAUST AIR |
| EAT | ENTERING AIR TEMPERATURE |
| EC | ECONOMIZER, EVAPORATIVE COOLER |
| ECH | ELECTRIC CABINET HEATER |
| ECP | EQUIPMENT CONTROL PANEL |
| EDH | ELECTRIC DUCT HEATER |
| EF | EXHAUST FAN |
| EFF | EFFICIENCY |
| EGS | EMERGENCY GAS SCRUBBER |
| EIH | ELECTRIC INFRARED HEATER |
| EL | ELEVATION |
| EP | EXPLOSION PROOF |
| EQUIP | EQUIPMENT |
| ES | EMERGENCY SWITCH |
| ESP | EXTERNAL STATIC PRESSURE |
| ET | EXPANSION TANK |
| EUH | ELECTRIC UNIT HEATER |
| EV | EXHAUST VALVE |
| EVS | EMERGENCY VENTILATION SWITCH |
| EWT | ENTERING WATER TEMPERATURE |
| EXIST | EXISTING |

### F

| | |
|---|---|
| F | DEGREES FAHRENHEIT |
| FBD | FACE AND BYPASS DAMPER |
| FC | FORWARD CURVE, FAN COIL |
| FCU | FAN COIL UNIT |
| FD | FIRE DAMPER |
| FDB | DEGREES FAHRENHEIT DRY BULB |
| FEF | FUME EXHAUST FAN |
| FLEX | FLEXIBLE |
| FM | FLOW METER |
| FPM | FEET PER MINUTE |
| FR | FUNNEL RECEPTOR |
| FRP | FIBERGLASS REINFORCED PLASTIC PIPE |
| FS | FLOW SWITCH |
| FSD | COMBINATION FIRE/SMOKE DAMPER |
| FT | FEET, FIN TUBE HEATER |
| FUR | FURNACE |
| FWB | DEGREES FAHRENHEIT WET BULB |

### G

| | |
|---|---|
| GA | GAUGE |
| GALV | GALVANIZED |
| GIH | GAS INFRARED HEATER |
| GPM | GALLONS PER MINUTE |
| GUH | GAS UNIT HEATER |
| GV | GATE VALVE |

### H

| | |
|---|---|
| H | HAND OPERATOR, HEATING, HEATING (MAKE ON FALL), HEIGHT, HORIZONTAL, HUMIDISTAT |
| HC | HEATING COIL |
| HCH | HEATING WATER CABINET HEATER |
| HE | HEAT EXCHANGER |
| HO | HAND-OFF |
| HOA | HAND-OFF-AUTO |
| HP | HEAT PUMP, HORSEPOWER |
| HR | HEAT RECOVERY UNIT |
| HUH | HEATING WATER UNIT HEATER |
| HUM | HUMIDIFIER |
| HWB | HEATING WATER BOILER |
| HWP | HEATING WATER PUMP |
| HZ | HERTZ |

### I

| | |
|---|---|
| I | INTAKE |
| ID | INSIDE DIAMETER |
| IN | INCHES |
| INV | INVERT |

### K

| | |
|---|---|
| KW | KILOWATT |

### L

| | |
|---|---|
| L | LINED DUCT, LOUVER |
| LAT | LEAVING AIR TEMPERATURE |
| LBS | POUNDS |
| LD | COMBINATION LOUVER/DAMPER |
| LI | LEVEL INDICATOR |
| LS | LEVEL SWITCH |
| LWT | LEAVING WATER TEMPERATURE |

### M

| | |
|---|---|
| MAU | MAKEUP AIR UNIT |
| MAX | MAXIMUM |
| MCA | MINIMUM CIRCUIT AMPS |
| ME | MIST ELIMINATOR |
| MFR | MANUFACTURER |
| MOCP | MAXIMUM OVERCURRENT PROTECTION |
| MIN | MINIMUM |
| MOD | MODULATING |

### N

| | |
|---|---|
| NC | NORMALLY CLOSED |
| NO | NORMALLY OPEN, NUMBER |
| NPSHR | NET POSITIVE SUCTION HEAD REQUIRED |

### O

| | |
|---|---|
| OA | OUTSIDE AIR |
| OD | OUTSIDE DIAMETER |

### P

| | |
|---|---|
| P | PNEUMATIC |
| PD | PRESSURE DROP (INCHES OF WATER FOR AIR, FEET OF WATER FOR FLUIDS) |
| PAC | PACKAGED AIR CONDITIONING UNIT |
| PAH | PACKAGED AIR HANDLING UNIT |
| PDS | PRESSURE DIFFERENTIAL SWITCH |
| PF | PROPELLER FAN |
| PHP | PACKAGED HEAT PUMP |
| PL | PLATE |
| POS | POSITION |
| PPM | PARTS PER MILLION |
| PROP | PROPELLER |
| PRS | PRESSURE REDUCING STATION |
| PRV | POWER ROOF VENTILATOR, PRESSURE REDUCING VALVE |
| PS | PRESSURE SWITCH |
| PSI | POUNDS PER SQUARE INCH |
| PSIA | POUNDS PER SQUARE INCH ABSOLUTE |
| PSIG | POUNDS PER SQUARE INCH GAUGE |
| PTAC | PACKAGED TERMINAL AIR CONDITIONER |

### R

| | |
|---|---|
| RA | REACTIVATION AIR, RETURN AIR |
| RAC | ROOM AIR CONDITIONER |
| RCS | REMOTE CONTROL STATION |
| REQD | REQUIRED |
| RH | RELATIVE HUMIDITY, ROOF HOOD |
| RSF | ROOF SUPPLY FAN |

### S

| | |
|---|---|
| SA | SUPPLY AIR |
| SCD | SMOKE CONTROL DAMPER |
| SCFM | STANDARD CUBIC FEET PER MINUTE |
| SF | SQUARE FEET, SUPPLY FAN |
| SH | SHEET |
| SIM | SIMILAR |
| SMD | SMOKE DETECTOR |
| SP | STATIC PRESSURE (INCHES OF WATER) |
| SPS | STATIC PRESSURE SENSOR |
| SS | STAINLESS STEEL |
| STD | STANDARD |
| SV | SERVICE VALVE, SHUTOFF VALVE, SOLENOID VALVE |

### T

| | |
|---|---|
| T | THERMOSTAT |
| TCP | TEMPERATURE CONTROL PANEL |
| TCV | TEMPERATURE CONTROL VALVE |
| TE | TEMPERATURE ELEMENT |
| TL | TOP LEVEL |
| TS | TIP SPEED |
| TYP | TYPICAL |

### V

| | |
|---|---|
| V | VERTICAL |
| VAC | VACUUM OUTLET |
| VANE | VANEAXIAL |
| VAV | VARIABLE AIR VOLUME |
| VCD | VOLUME CONTROL DAMPER |
| VF | VANEAXIAL FAN |

### W

| | |
|---|---|
| W | WIDE FLANGE, WIDTH |
| WB | WET BULB |
| WC | WATER CHILLER WATER COLUMN |
| WF | WALL FAN |
| WG | WATER GAUGE |
| WH | WALL HEATER |
| WM | WALL MOUNTED |
| WST | WATER STORAGE TANK |
| WT | WEIGHT |
| WV | WATER CONTROL VALVE |

### Z

| | |
|---|---|
| ZD | ZONE DAMPER |

## GENERAL HVAC NOTES

1. THIS IS GENERAL LEGEND AND ABBREVIATION SHEET FOR HVAC DRAWINGS. SOME ITEMS CONTAINED ON THIS SHEET MAY NOT BE USED ON THIS SPECIFIC PROJECT.
2. ALL MECHANICAL HVAC WORK SHALL BE IN ACCORDANCE WITH THE FOLLOWING APPLICABLE CODES:
   2016 CALIFORNIA BUILDING CODE
   2016 CALIFORNIA MECHANICAL CODE
   2016 CALIFORNIA ENERGY CONSERVATION CODE
3. FOR ROOFTOP EQUIPMENT CURBS, FLUES, AND FLASHING DETAILS, SEE ARCHITECTURAL DRAWINGS.
4. SEE ARCHITECTURAL AND STRUCTURAL DRAWINGS FOR ALL EQUIPMENT BASE DETAILS.
5. "SCREENED" DELINEATION DENOTES EXISTING AND NEW FACILITIES AND IS FOR REFERENCE ONLY. "LIGHT" LINE DELINEATION DENOTES EXISTING MECHANICAL EQUIPMENT AND SYSTEMS. EXISTING FACILITY AND MECHANICAL SYSTEMS INFORMATION WAS TAKEN FROM PREVIOUS DRAWINGS, CONSTRUCTION RECORDS, DATA, AND FIELD SURVEY INFORMATION. ACTUAL LOCATION, ARRANGEMENT, AND DIMENSIONS SHALL BE FIELD VERIFIED AND WORK INSTALLED TO MEET ACTUAL CONDITIONS AND LOCATIONS ENCOUNTERED. "BOLD" (DARK) DELINEATION IS NEW WORK TO BE CONSTRUCTED UNDER THIS CONTRACT.
6. ALL MATERIALS, FITTINGS, COVERS, AND EQUIPMENT INSTALLED IN RETURN AIR PLENUMS SHALL BE NONCOMBUSTIBLE AND UL LISTED FOR USE IN RETURN AIR PLENUMS.
7. ALL PIPE AND DUCT PENETRATIONS THROUGH FIRE RESISTANCE RATED ASSEMBLIES SHALL BE PROVIDED WITH FIRESTOP SYSTEMS, EQUIPMENT AND ACCESSORIES TO RESIST THE PASSAGE OF FIRE, SMOKE AND OTHER GASES. THE ORIGINAL FIRE RESISTANCE RATING OF THE ASSEMBLY PENETRATED SHALL BE MAINTAINED FOR ALL TYPES OF PENETRATIONS.
8. METAL ROOF DECKING OR BOTTOM CHORD OF BAR JOISTS SHALL NOT BE USED FOR THE SUPPORT OF EQUIPMENT, PIPING, OR DUCTWORK.
9. ALL HANGERS, BRACKETS, OR BRACES FOR PIPING, DUCTWORK AND EQUIPMENT ARE NOT INDICATED ON THE DRAWINGS. REFER TO THE SPECIFICATIONS FOR SUPPORT REQUIREMENTS NOT SHOWN ON THE PLANS.
10. OUTSIDE AIR INLETS SHALL BE LOCATED A MINIMUM OF 10' AWAY FROM ANY EXHAUST AIR OR PLUMBING VENT OUTLET.
11. ALL EQUIPMENT, PIPING AND DUCTWORK FINAL LOCATIONS SHALL BE COORDINATED TO AVOID INTERFERENCES WITH STRUCTURE, OTHER PIPING, EQUIPMENT, DUCTWORK, AND CONDUIT. UNLESS SPECIFICALLY DIMENSIONED, THE PIPE AND DUCTWORK ROUTING SHOWN IS INTENDED TO INDICATE GENERAL LOCATION ONLY. INSTALL DUCTWORK TO ALLOW FOR PIPING TO BE ROUTED NEAR WALLS.
12. ALL PIPING AND DUCTWORK SHALL BE ROUTED AS HIGH AS POSSIBLE WITH A MINIMUM HEIGHT OF 8'-0" ABOVE THE WALKING SURFACE UNLESS OTHERWISE INDICATED BY A CENTERLINE OR BOTTOM OF DUCT ELEVATION.
13. DUCTWORK SHALL BE FABRICATED, REINFORCED, SUPPORTED AND SEALED FOR OPERATING PRESSURES INDICATED IN THE SCHEDULES FOR THE EQUIPMENT IT SERVES. ALL DUCTWORK SHALL HAVE A MINIMUM SMACNA PRESSURE CLASSIFICATION OF ONE INCH.
14. DUCT SIZES INDICATED ARE CLEAR DIMENSIONS INSIDE THE DUCT OR DUCT LINING. SHEET METAL SIZES ARE LARGER FOR INTERNALLY LINED DUCTWORK.
15. MINIMUM INSULATION THICKNESSES FOR DUCTWORK SHALL BE AS INDICATED IN THE SPECIFICATIONS UNLESS OTHERWISE INDICATED ON THE PLANS WITH A "L" OR "W" DESIGNATION. WHERE AN INSULATION THICKNESS IS INDICATED ON THE DRAWINGS, IT SHALL GOVERN. THE FOLLOWING DENOTES THE DIFFERENT INSULATION THICKNESSES INDICATED ON THE DRAWINGS:
    L,L1 - 1 INCH INTERNALLY LINED W,W1 - 1 INCH EXTERNALLY WRAPPED
    L15 - 1.5 INCH INTERNALLY LINED W15 - 1.5 INCH EXTERNALLY WRAPPED
    L2 - 2 INCH INTERNALLY LINED W2 - 2 INCH EXTERNALLY WRAPPED
16. DUCT CONNECTIONS TO EQUIPMENT, PIPING SIZES TO EQUIPMENT, AND EQUIPMENT SUPPORTS SHALL BE VERIFIED AND ADJUSTED TO MATCH ACTUAL EQUIPMENT FURNISHED.
17. THE LOCATION OF PIPING AND VALVES TO THE AIR HANDLING EQUIPMENT SHALL NOT INTERFERE WITH FILTER REMOVAL OR AIR HANDLING EQUIPMENT SERVICING.
18. ROOFTOP EQUIPMENT SHALL NOT BE LOCATED SUCH THAT ACCESS TO CONTROLS AND TO PERFORM SERVICE FOR EQUIPMENT IS LOCATED WITHIN 10 FEET OF THE BUILDING EDGE.
19. CONTROL DAMPER SIZES SHALL MATCH DIMENSIONS OF ASSOCIATED LOUVER UNLESS OTHERWISE INDICATED.
20. SEISMIC RESTRAINTS/BRACING SHALL BE PROVIDED FOR ALL EQUIPMENT, DUCTWORK, AND ACCESSORIES IN ACCORDANCE WITH THE LATEST SMACNA SEISMIC RESTRAINT MANUAL AND LOCAL BUILDING CODES. CONTRACTOR SHALL BE RESPONSIBLE FOR ALL SEISMIC SUPPORTS AND ADDITIONAL/MISCELLANEOUS STEEL REQUIRED FOR PROPER INSTALLATION OF SUPPORTS. SUPPORTS AND SEISMIC RESTRAINTS DESIGN SUBMITTALS SHALL BEAR THE STAMP AND SIGNATURE OF A AN ENGINEER LICENSED IN THE STATE OF CALIFORNIA.
21. INSULATION SHALL BE PROVIDED FOR EQUIPMENT, PIPING AND DUCT SYSTEMS AS INDICATED IN THE SPECIFICATIONS.

COASTAL DEVELOPMENT PERMIT PLANS

| NO. | BY | CHK | APP |
|---|---|---|---|
| B | MDS | RVC | LDA |

60% SUBMITTAL
REVISIONS AND RECORD OF USE
DATE 7/30/2019

BLACK & VEATCH
JOINT VENTURE
FILANC
BLACK & VEATCH

CITY OF MORRO BAY
MORRO BAY WRF
RECLAMATION FACILITY (WRF)

HVAC
LEGEND, ABBREVIATIONS AND GENERAL NOTES

DESIGNED: SM
DETAILED: MDS
CHECKED: LDA
APPROVED:
DATE: 7/30/2019

0 1/2 1
IF THIS BAR DOES NOT MEASURE 1" THEN DRAWING IS NOT TO FULL SCALE

PROJECT NO. 400530

00-H-001
SHEET
OF

PLOTTED: 7/30/2019 2:40:03 PM
D400530

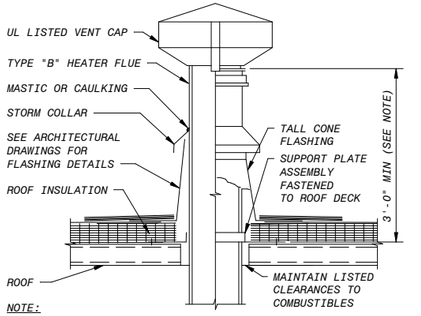


NOTE:
FLUE HEIGHT SHALL BE INCREASED SUCH THAT VENT CAP IS NOT LESS THAN 2' HIGHER THAN ANY PORTION OF THE BUILDING WITHIN 10'.

A FLUE
NO SCALE

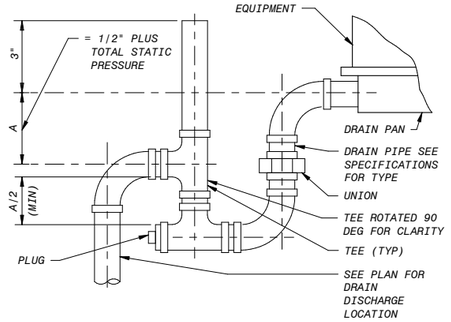


B DRAIN PAN TRAP - DRAW THROUGH
NO SCALE

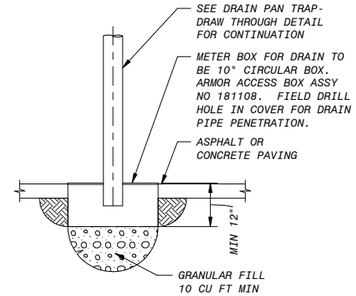


C CONDENSATE DRAIN SUMP
NO SCALE

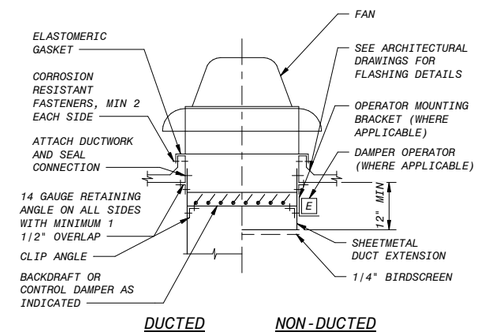


D ROOF MOUNTED FAN
NO SCALE

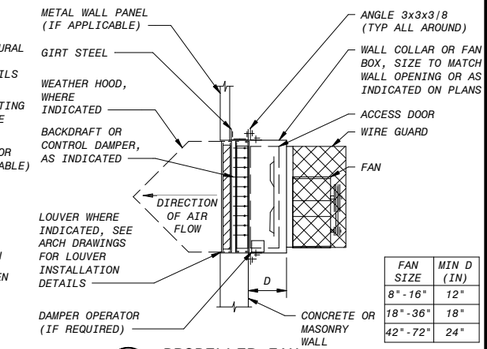


| FAN SIZE | MIN D (IN) |
|---|---|
| 8"-16" | 12" |
| 18"-36" | 18" |
| 42"-72" | 24" |

E PROPELLER FAN
NO SCALE

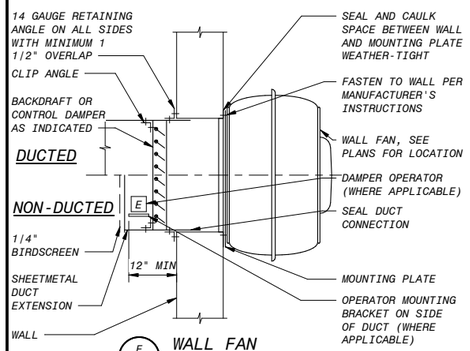


F WALL FAN
NO SCALE

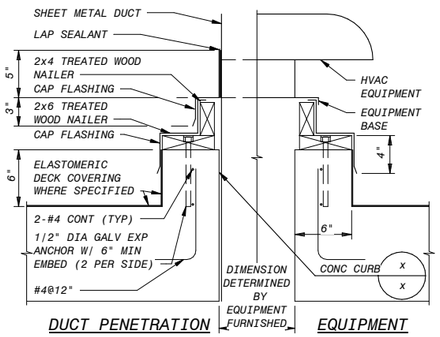


G HVAC EQUIPMENT CURB
NO SCALE

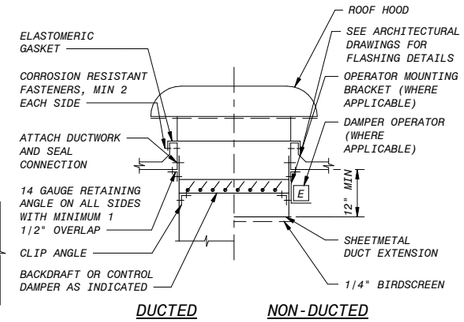


H ROOF HOOD
NO SCALE

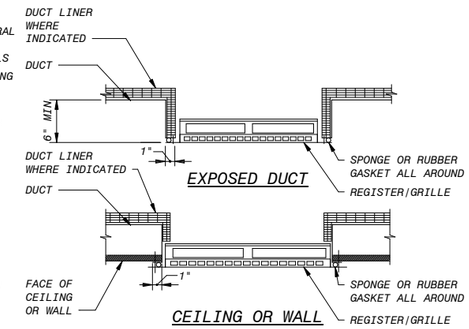


J
NO SCALE

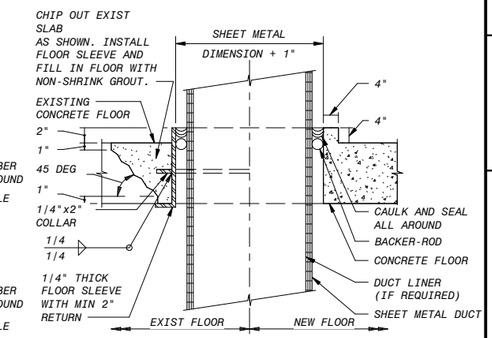


K FLOOR PENETRATION
NO SCALE

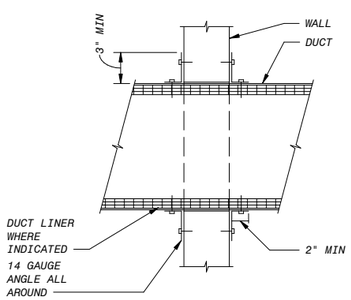


L WALL PENETRATION - INTERIOR
NO SCALE

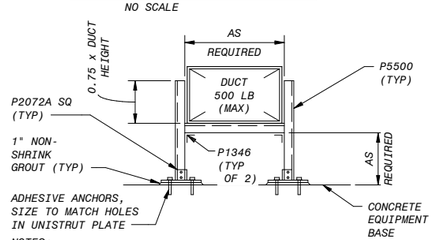


NOTES:
1. DISTANCE BETWEEN SUPPORTS APPROXIMATELY 10 FEET OR AS INDICATED ON PLANS.
2. USE HVAC DUCT CONSTRUCTION STANDARDS (SMACNA) TO DETERMINE WEIGHT OF DUCT.
3. PART NUMBERS USED REFLECT UNISTRUT PRODUCTS. USE UNISTRUT EQUAL PRODUCTS.
4. UNISTRUT MATERIAL TO MATCH DUCT MATERIAL.

M DUCT SUPPORT
NO SCALE

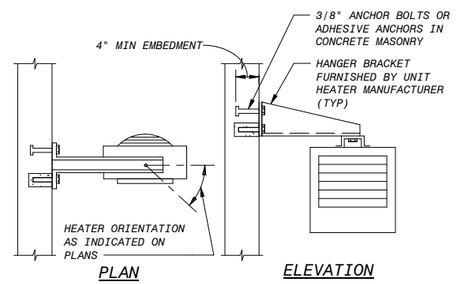


NOTE:
MASONRY WALLS SHALL BE SOLIDLY GROUTED 4" MIN, ALL SIDES OF ANCHORS.

N ELECTRIC UNIT HEATER SUPPORT - WALL
NO SCALE

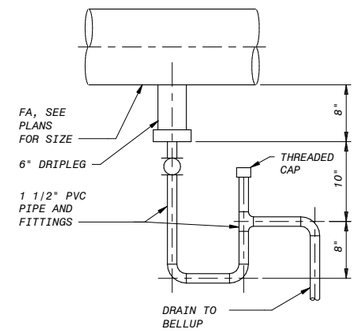


P DRAIN TRAP
NO SCALE

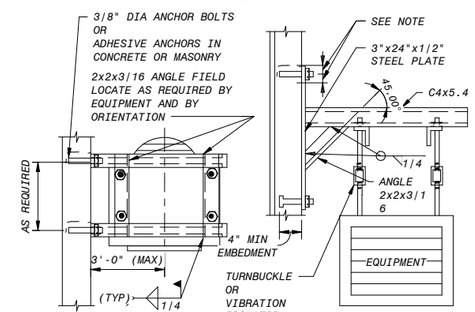


NOTES:
MASONRY WALLS SHALL BE SOLIDLY GROUTED 4" MIN, ALL SIDES OF ANCHORS.

Q WALL HANGER - 4 ROD - EQUIPMENT SUPPORT - STRUCT MEMBERS
NO SCALE

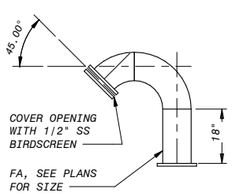


R GOOSENECK INTAKE/EXHAUST
NO SCALE

COASTAL DEVELOPMENT PERMIT PLANS

| NO. | BY | CHK | APP | DATE | REVISIONS AND RECORD OF USE |
|---|---|---|---|---|---|
| B | MDS | RWC | LDA | 7/30/2019 | 60% SUBMITTAL |

BLACK & VEATCH
JOINT VENTURE
FILANC
BLACK & VEATCH

CITY OF MORRO BAY
MORRO BAY WRF
RECLAMATION FACILITY (WRF)

HVAC DETAILS

DESIGNED: SM
DETAILED: MDS
CHECKED: LDA
APPROVED:
DATE: 7/30/2019

0 1/2 1
IF THIS BAR DOES NOT MEASURE 1" THEN DRAWING IS NOT TO FULL SCALE

PROJECT NO. 400530

00-H-501
SHEET OF

PLOTTED: 7/30/2019 2:40:03 PM
D400530

## AIR HANDLING UNIT SCHEDULE

| UNIT NUMBER | LOCATION | MANUFACTURER | MODEL | AIRFLOW (CFM) | ESP (IN WC) | ORIENTATION | INDOOR FAN MOTOR HP | DRIVE | POWER SUPPLY | | COOLING | | | | HEATING | | | FILTER DATA | | VIBRATION ISOLATION | APPROX WEIGHT (LBS) | NOTES |
|---|---|---|---|---|---|---|---|---|---|---|---|---|---|---|---|---|---|---|---|---|---|---|
| | | | | | | | | | | | EAT | | CAPACITY (BTUH) | | EAT (FDB) | TYPE | CAPACITY (BTUH OR (KW)) | TYPE | THICKNESS (IN) | | | |
| | | | | | | | | | VOLTS | PHASE | (FDB) | (FWB) | SENSIBLE | TOTAL | | | | | | | | |
| 95-HVAC-AHU-0001 | AREA 95 OPERATION BUILDING | --- | --- | 1600 | 1 | HORIZONTAL | 1 | DIRECT | 120 | 1 | 88 | 64 | 24600 | 61590 | 88 | ELECTRIC | 67400 | PLEATED | 2 | INTERNAL | 873 | 1 |

## CONDENSING UNIT/HEAT PUMP SCHEDULE

| UNIT NUMBER | LOCATION | MANUFACTURER | MODEL | COOLING | | | | HEATING OUTPUT CAPACITY (MBH) | POWER SUPPLY | | MINIMUM CIRCUIT AMPACITY | ARI MINIMUM EFFICIENCY | MATCHED WITH INDOOR UNIT | APPROX WEIGHT (LBS) | NOTES |
|---|---|---|---|---|---|---|---|---|---|---|---|---|---|---|---|
| | | | | CAPACITY (MBH) | MIMIMUM CAPACITY STEPS | SUCTION TEMPERATURE (F) | | | | | | | | | |
| | | | | | | MINIMUM | MAXIMUM | | VOLTS | PHASE | | | | | |
| 95-HVAC-ACCU-0001 | 95-OPERATION BUILDING | L.G | ARUM241DTE5 | 240 | 1 | 45 | 50 | 243 | 480 | 3 | 41.4 | 11.4 | 95-HVAC-FCU-0001 TO 0012 | 312 | 1,2 |
| 95-HVAC-ACCU-0002 | 95-OPERATION BUILDING | L.G | --- | 29 | 1 | 45 | 50 | 243 | 480 | 3 | 41.4 | 11.4 | 95-HVAC-AHU-0001 | 873 | 1 |
| 96-HVAC-ACCU-0001 | AREA 96 MAINTENACE BUILDING | --- | --- | 18 | 1 | 45 | 50 | --- | 208 | 1 | 10 | 9.5 SEER | 96-HVAC-FCU-0001 | --- | --- |

## FAN COIL UNIT SCHEDULE

| UNIT NUMBER | LOCATION | MANUFACTURER | MODEL | AIRFLOW (CFM) | AIR PD (IN WC) | EAT | | LAT (FDB) | CAPACITY (MBH) | | APPROX WEIGHT (LBS) | NOTES |
|---|---|---|---|---|---|---|---|---|---|---|---|---|
| | | | | | | (FDB) | (FWB) | | SENSIBLE | TOTAL | | |
| 95-HVAC-FCU-0001 | AREA 95 OPERATION BUILDING-BREAK ROOM | LG Electronics | CONCEALED DUCT | 2119.0 | --- | 72 | 57.2 | 61.2 | 76.4 | 53.5 | --- | 1,2 |
| 95-HVAC-FCU-0002 | AREA 95 OPERATION BUILDING-CONFERENCE ROOM | LG Electronics | CASSETTE TYPE | 395.0 | --- | 85 | 57.2 | 61.2 | 19.1 | 13.8 | --- | 1,2 |
| 95-HVAC-FCU-0003 | AREA 95 OPERATION BUILDING-LOBBY | LG Electronics | CASSETTE TYPE | 918.0 | --- | 85 | 57.2 | 61.2 | 36.2 | 26.8 | --- | 1,2 |
| 95-HVAC-FCU-0004 | AREA 95 OPERATION BUILDING-OFFICE 4 & 5 | LG Electronics | CONCEALED DUCT | 468.2 | --- | 85 | 57.2 | 61.2 | 9.6 | 9.3 | --- | 1,2 |
| 95-HVAC-FCU-0005 | AREA 95 OPERATION BUILDING-MAP ROOM AND COPY ROOM | LG Electronics | CONCEALED DUCT | 512.0 | --- | 85 | 57.2 | 61.2 | 15.4 | 14.6 | --- | 1,2 |
| 95-HVAC-FCU-0006 | AREA 95 OPERATION BUILDING-MANAGER OFFICE | LG Electronics | CASSETTE TYPE | 282.0 | --- | 85 | 57.2 | 61.2 | 9.6 | 6.9 | --- | 1,2 |
| 95-HVAC-FCU-0007 | AREA 95 OPERATION BUILDING-OFFICE 2 & 3 | LG Electronics | CONCEALED DUCT | 512.0 | --- | 85 | 57.2 | 61.2 | 12.3 | 11.8 | --- | 1,2 |
| 95-HVAC-FCU-0008 | AREA 95 OPERATION BUILDING-CONTROL ROOM | LG Electronics | CONCEALED DUCT | 1031.0 | --- | 85 | 57.2 | 61.2 | 362 | 26.8 | --- | 1,2 |
| 95-HVAC-FCU-0009 | AREA 95 OPERATION BUILDING-HALL2 & TABLE/CHAIR | LG Electronics | CONCEALED DUCT | 459.1 | --- | 85 | 57.2 | 61.2 | 19.1 | 13.9 | --- | 1,2 |
| 95-HVAC-FCU-0010 | AREA 95 OPERATION BUILDING-ON CALL & LAUNDRY | LG Electronics | CONCEALED DUCT | 512.0 | --- | 85 | 57.2 | 61.2 | 15.4 | 10.6 | --- | 1,2 |
| 95-HVAC-FCU-0011 | AREA 95 OPERATION BUILDING-WOEMENS AND MENS TOILET | LG Electronics | CONCEALED DUCT | 459.1 | --- | 85 | 57.2 | 61.2 | 19.1 | 13.9 | --- | 1,2 |
| 95-HVAC-FCU-0012 | AREA 95 OPERATION BUILDING-SAMPLE STORAGE 1 | LG Electronics | CASSETTE TYPE | 395.0 | --- | 85 | 57.2 | 61.2 | 5.6 | 4.5 | --- | 1,2 |
| 96-HVAC-FCU-0001 | AREA 96 MAINTENACE BUILDING | --- | WALL MOUNTED | 1200.0 | --- | 85 | 61.6 | 61.2 | 13.95 | 13.95 | --- | 1,2 |

## FAN SCHEDULE

| UNIT NUMBER | LOCATION | FAN TYPE | AIRFLOW (CFM) | ESP (IN WC) | MOTOR HP | POWER SUPPLY | | MINIMUM WHEEL DIAMETER (IN) | WHEEL TYPE | DRIVE | FILTER DATA | | VIBRATION ISOLATION | APPROX WEIGHT (LBS) | NOTES |
|---|---|---|---|---|---|---|---|---|---|---|---|---|---|---|---|
| | | | | | | VOLTS | PHASE | | | | TYPE | THICKNESS (IN) | | | |
| 50-HVAC-EF-0001 | AREA 50 RO/UV BUILDING | PF | 4000 | 0.625 | 1 | 480 | 3 | 48 | P | BELT | --- | --- | INTERNAL | 100 | 1,2A |
| 50-HVAC-EF-0002 | AREA 50 RO/UV BUILDING | PF | 4000 | 0.625 | 1 | 480 | 3 | 48 | P | BELT | --- | --- | INTERNAL | 100 | 1,2A |
| 96-HVAC-DF-0001 | AREA 96 MAINTENACE BUILDING-SERVICE TRUCKBAY | DF | 2800 | 0.625 | 1.5 | 480 | 3 | 16 | C | BELT | --- | --- | SPRING HANGER | 540 | 2A |
| 96-HVAC-EF-0001 | AREA 96 MAINTENACE BUILDING | PF | 200 | 0.125 | 1/40 | 120 | 1 | 8 | P | DIRECT | --- | --- | INTERNAL | 140 | 1,2A |
| 96-HVAC-EF-0002 | AREA 96 MAINTENACE BUILDING | PF | 200 | 0.125 | 1/40 | 120 | 1 | 8 | P | DIRECT | --- | --- | INTERNAL | 140 | 1,2A |
| 96-HVAC-EF-0003 | AREA 96 MAINTENACE BUILDING | PF | 3100 | 0.625 | 3/4 | 480 | 3 | 48 | P | BELT | --- | --- | INTERNAL | 140 | 1,2A |
| 96-HVAC-EF-0004 | AREA 96 MAINTENACE BUILDING | PF | 3100 | 0.625 | 3/4 | 480 | 3 | 48 | P | BELT | --- | --- | INTERNAL | 140 | 1,2A |

## HEATER SCHEDULE

| UNIT NUMBER | LOCATION | TYPE | UNIT ORIENTATION | AIR FLOW (CFM) | AIR PD (IN WC) | OUTPUT CAPACITY | | WATER FLOW (GPM) | WATER PD (FT) | MOTOR HP | POWER SUPPLY | | APPROX WEIGHT (LBS) | NOTES |
|---|---|---|---|---|---|---|---|---|---|---|---|---|---|---|
| | | | | | | (BTUH) | (KW) | | | | VOLTS | PHASE | | |
| 50-HVAC-EUH-0001 | AREA 50 RO/UV BUILDING-ELECTRICAL ROOM | EUHHD | HORIZONTAL | 410 | --- | --- | 2.6 | --- | --- | 1/40 | 208 | 1 | 32 | 1,2 |
| 50-HVAC-GUH-0002 | AREA 50 RO/UV BUILDING | GUH | HORIZONTAL | 750 | --- | 24000 | 7 | --- | --- | 1/30 | 120 | 1 | 100 | 1,3 |
| 50-HVAC-GUH-0003 | AREA 50 RO/UV BUILDING | GUH | HORIZONTAL | 750 | --- | 24000 | 7 | --- | --- | 1/30 | 120 | 1 | 100 | 1,3 |
| 50-HVAC-GUH-101 | AREA 50 RO/UV BUILDING | GUH | HORIZONTAL | 750 | --- | 24000 | 7 | --- | --- | 1/30 | 120 | 1 | 100 | 1,3 |
| 95-HVAC-EUH-0001 | AREA 95 OPERATION BUILDING-ELECTRICAL ROOM | EUHHD | HORIZONTAL | 410 | --- | --- | 2.6 | --- | --- | 1/40 | 208 | 1 | 32 | 1,2 |
| 96-HVAC-EUH-0001 | AREA 96 MAINTENANCE BUILDING-ELECTRICAL ROOM | EUHHD | HORIZONTAL | 410 | --- | --- | 2.6 | --- | --- | 1/40 | 208 | 1 | 32 | 1,2 |
| 96-HVAC-GUH-0001 | AREA 96 MAINTENACE BUILDING | GUH | HORIZONTAL | 750 | --- | 24000 | 7 | --- | --- | 1/30 | 120 | 1 | 100 | 1,3 |
| 96-HVAC-GUH-0002 | AREA 96 MAINTENACE BUILDING | GUH | HORIZONTAL | 750 | --- | 24000 | 7 | --- | --- | 1/30 | 120 | 1 | 100 | 1,3 |
| 96-HVAC-GUH-0003 | AREA 96 MAINTENACE BUILDING | GUH | HORIZONTAL | 750 | --- | 24000 | 7 | --- | --- | 1/30 | 120 | 1 | 100 | 1,3 |
| 96-HVAC-GUH-0004 | AREA 96 MAINTENACE BUILDING | GUH | HORIZONTAL | 750 | --- | 24000 | 7 | --- | --- | 1/30 | 120 | 1 | 100 | 1,3 |

## PACKAGED AIR CONDITIONING UNIT/HEAT PUMP SCHEDULE

| UNIT NUMBER | LOCATION | MANUFACTURER | INDOOR FAN | | | | POWER SUPPLY | | MINIMUM CIRCUIT AMPACITY | COOLING | | | | | HEATING | | | | DISCHARGE DIRECTION | ARI MINIMUM EFFICIENCY | OA (CFM) | FILTER DATA | | ECONOMIZER DATA | | APPROX WEIGHT (LBS) | NOTES |
|---|---|---|---|---|---|---|---|---|---|---|---|---|---|---|---|---|---|---|---|---|---|---|---|---|---|---|---|
| | | | AIRFLOW (CFM) | ESP (IN WG) | MOTOR HP | DRIVE | VOLTS | PHASE | | EAT | | CAPACITY (BTUH) | | MIN CAPACITY STAGES | EAT | TYPE | CAPACITY (BTUH OR (KW)) | MINIMUM HEAT STAGES | | | | TYPE | THICKNESS (IN) | TYPE | CONTROLS | | |
| | | | | | | | | | | (FDB) | (FWB) | SENSIBLE | TOTAL | | | | | | | | | | | | | | |
| 50-HVAC-PHP-0001 | 50-ELECTRICAL ROOM | TRANE | 3000 | 1 | 1.5 | BELT | 480 | 3 | 19 | 85.3 | --- | 83859 | 86169 | 1 | 72 | AUXILIARY ELECTRIC | 35500 | 1 | HORIZONTAL | | 100 | PLEATED | 2 | POWER EXHAUST | DIFFERENTIAL DRY BULB | -- | -- |
| 95-HVAC-PHP-0001 | 95-ELECTRICAL ROOM | TRANE | 2030 | 1 | 1 | BELT | 480 | 3 | 15 | 75.6 | --- | 56465 | 58775 | 1 | 72 | AUXILIARY ELECTRIC | 23700 | 1 | HORIZONTAL | --- | 100 | PLEATED | 2 | POWER EXHAUST | DIFFERENTIAL DRY BULB | --- | --- |
| 96-HVAC-PHP-0001 | 96-LABOROTORY | TRANE | 1200 | 1 | 1 | BELT | 480 | 3 | 15 | 85.3 | --- | 68462 | 40722 | 1 | 72 | AUXILIARY ELECTRIC | 50500 | 1 | HORIZONTAL | --- | 100 | PLEATED | 2 | POWER EXHAUST | DIFFERENTIAL DRY BULB | --- | --- |

## AIR DEVICE SCHEDULE

| SYMBOL | MANUFACTURER | MODEL | MODULE SIZE | MATERIAL | FINISH | DAMPER TYPE | NOTES |
|---|---|---|---|---|---|---|---|
| SR-1 | --- | 272FS | --- | ALUMINUM | BAKED WHITE ENAMEL | OPPOSED BLADE | 1 |
| RG-1 | --- | 50F | --- | ALUMINUM | BAKED WHITE ENAMEL | --- | 1 |
| ER-1 | --- | 3FL | --- | ALUMINUM | BAKED WHITE ENAMEL | OPPOSED BLADE | 1 |

## GENERAL SHEET NOTES

SEE DRAWINGS 00-H-001 FOR LEGEND, ABBREVIATIONS AND GENERAL NOTES.

SCHEDULE LEGEND:

**AIR HANDLING UNIT (PACKAGED) | FURNACE SCHEDULE:**
ACCESSORIES: NONE

CAPACITY NOTE: CAPACITIES LISTED IN PARENTHESES ARE IN UNITS OF "KW". CAPACITIES LISTED WITHOUT PARENTHESES ARE IN UNITS OF "BTUH".

NOTES:
1. UNIT IS SUBJECT TO CORROSION FROM A HYDROGEN SULFIDE LADEN ATMOSPHERE. ALL AIRSTREAM COMPONENTS AND EXPOSED HEAT TRANSFER COMPONENTS SHALL BE GIVEN A PROTECTIVE SPECIAL COATING OF HERESITE OR APPROVED EQUAL. CONTROLS PANELS, WIRING CONNECTIONS AND OTHER SENSITIVE ELECTRONICS SHALL HAVE A CONFORMAL COATING APPLIED.

**CONDENSING UNIT/HEAT PUMP SCHEDULE:**
ACCESSORIES: NONE

OUTDOOR COIL ENTERING AIR TEMPERATURE:
COOLING – 98° F DESIGN / 0° F MIN
HEATING – 26° F (HEAT PUMP)

NOTES:
1. UNIT IS SUBJECT TO CORROSION FROM A HYDROGEN SULFIDE LADEN ATMOSPHERE. ALL AIRSTREAM COMPONENTS AND EXPOSED HEAT TRANSFER COMPONENTS SHALL BE GIVEN A PROTECTIVE SPECIAL COATING OF HERESITE OR APPROVED EQUAL. CONTROLS PANELS, WIRING CONNECTIONS AND OTHER SENSITIVE ELECTRONICS. SHALL HAVE A CONFORMAL COATING APPLIED.
2. VARIABLE REFERGINANT FLOW.

**FAN COIL UNIT SCHEDULE:**
ACCESSORIES: NONE

NOTES:

1. SEE ACCU SCHEDULE FOR MCA VALVE OF SPLIT SYSTEM.
2. MANUFACTURER USED AS THE BASIS OF DESIGN IS L.G..

**FAN SCHEDULE:**
ACCESSORIES: NONE

FAN TYPE NOTES:
DF - DUCT FAN
PF - PROPELLER FAN
CF- CEILING FAN

WHEEL TYPE NOTES:
A - AXIAL
C - CENTRIFUGAL
P - PROPELLER

NOTES:

1. BACKDRAFT DAMPER.
2. CONSTRUCTION A) ALUMINUM FAN BLADES B) STEEL FAN BLADES.

**HEATER SCHEDULE:**
ACCESSORIES: NONE
TYPE NOTES:
EUHHD - HEAVY-DUTY ELECTRIC UNIT HEATER
GUH - GAS UNIT HEATER
WH - WALL HEATER

NOTES:
1. ENTERING AIR TEMPARATURE-60°F.
2. MANUFACTURER USED AS THE BASIS OF DESIGN IS CHROMALOX.
3. MANUFACTURER USED AS THE BASIS OF DESIGN IS STERLING.

**PACKAGED AIR CONDITIONING UNIT/HEAT PUMP SCHEDULE:**
ACCESSORIES: NONE

CAPACITY NOTE:
CAPACITIES LISTED IN PARENTHESES ARE IN UNITS OF "KW".
CAPACITIES LISTED WITHOUT PARENTHESES ARE IN UNITS OF "BTUH".
OUTDOOR COIL ENTERING AIR TEMPERATURE:
COOLING - 98°F DESIGN/ 0°F MIN
HEATING - 26°F DESIGN (HEAT PUMP)

NOTES:
1. NONE

**AIR DEVICE SCHEDULE:**
ACCESSORIES: NONE

NOTES:
1. EQIPMENT SCHEDULE MODEL NUMBERS BASED ON TITUS.

| NO. | BY | CHK | APP |
|---|---|---|---|
| B | MDS | RWC | LDA |

60% SUBMITTAL
REVISIONS AND RECORD OF USE

| DATE |
|---|
| 7/30/2019 |

BLACK & VEATCH
JOINT VENTURE
FILANC
BLACK & VEATCH

CITY OF MORRO BAY
MORRO BAY WRF
RECLAMATION FACILITY (WRF)

HVAC SCHEDULE

DESIGNED: SAM
DETAILED: MDS
CHECKED: LDA
APPROVED:
DATE: 7/30/2019

0 1/2 1
IF THIS BAR DOES NOT MEASURE 1" THEN DRAWING IS NOT TO FULL SCALE

PROJECT NO.
400530

00-H-601
SHEET
OF

COASTAL DEVELOPMENT PERMIT PLANS

PLOTTED: 7/30/2019 2:40:08 PM
D400530

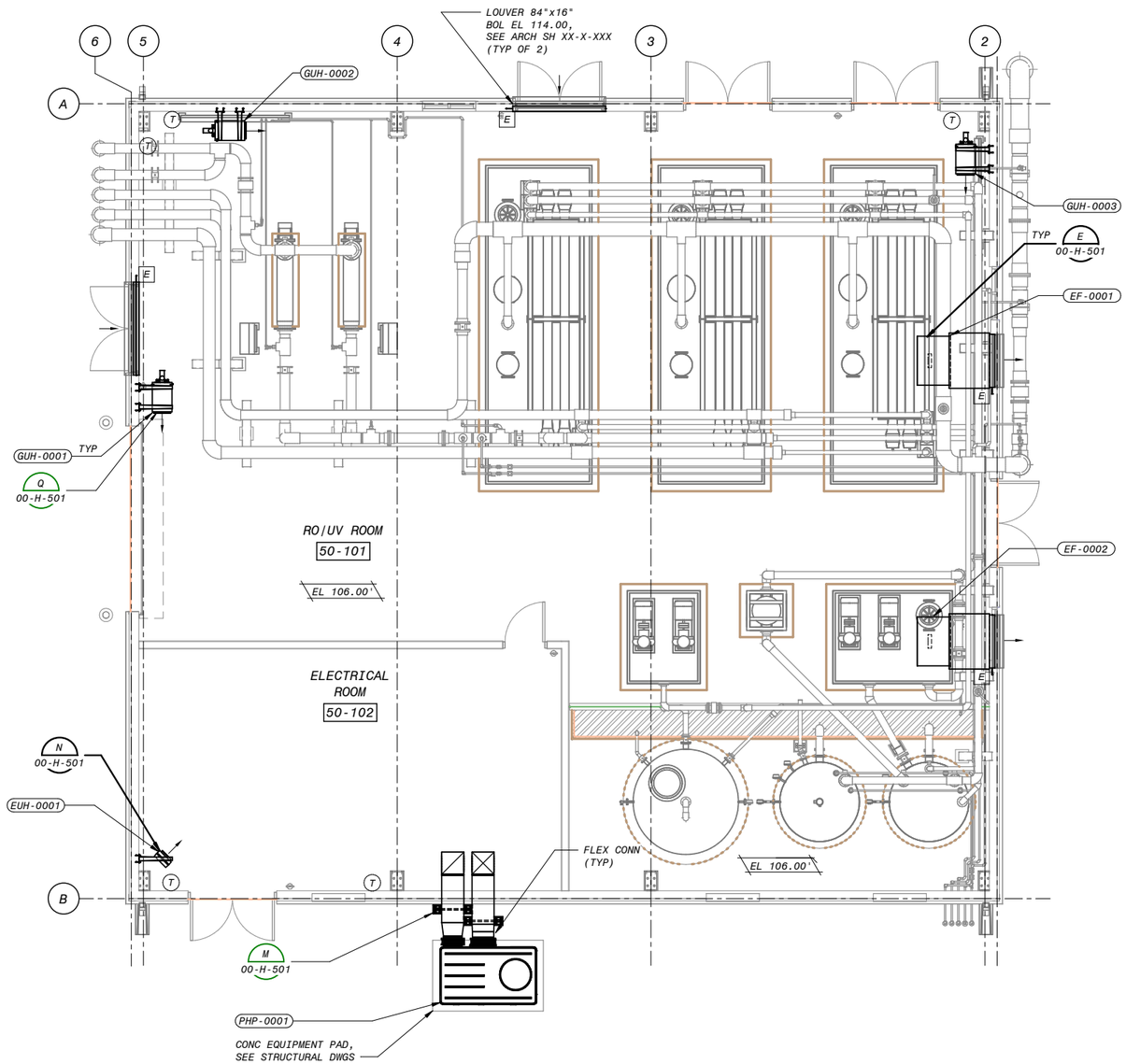


PLAN

3/16" = 1'-0"

6" 4' 2' 0' 5' 10'

3/16" = 1'-0"

COASTAL DEVELOPMENT PERMIT PLANS

| NO. | BY | CHK | APP |
|---|---|---|---|
| B | MDS | RKC | AEC |

60% SUBMITTAL

REVISIONS AND RECORD OF USE

DATE 7/30/2019

BLACK & VEATCH

JOINT VENTURE

FILANC

BLACK & VEATCH

CITY OF MORRO BAY
MORRO BAY WRF
RECLAMATION FACILITY (WRF)

RO/UV BUILDING
HVAC
PLAN

DESIGNED: SM
DETAILED: MDS
CHECKED: LDA
APPROVED:
DATE: 7/30/2019

0 1/2 1

IF THIS BAR DOES NOT MEASURE 1" THEN DRAWING IS NOT TO FULL SCALE

PROJECT NO.
400530

50-H-101

SHEET
OF

PLOTTED: 7/30/2019 2:09:52 PM

D400530

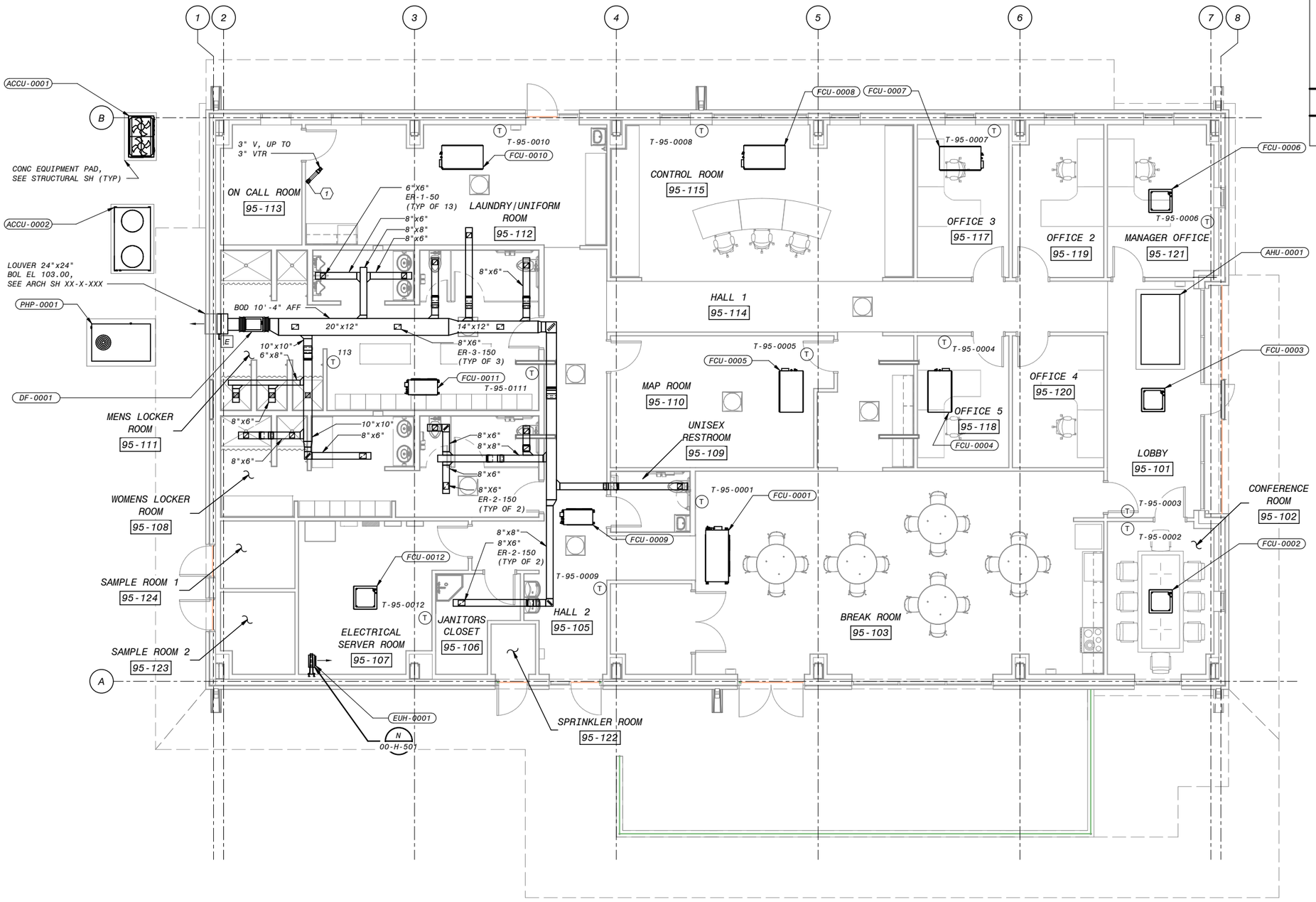


PLAN
3/16" = 1'-0"

## SHEET KEYNOTES

1. 3" V, FOR LAUNDRY AREA DRYER.

| NO. | BY | CHK | APP | DATE | REVISIONS AND RECORD OF USE |
|---|---|---|---|---|---|
| B | MDS | RWC | LDA | 7/30/2019 | 60% SUBMITTAL |

BLACK & VEATCH
JOINT VENTURE
FILANC
BLACK & VEATCH

CITY OF MORRO BAY
MORRO BAY WRF
RECLAMATION FACILITY (WRF)

OPERATIONS BUILDING
HVAC
PLAN

DESIGNED: SM
DETAILED: MDS
CHECKED: LDA
APPROVED:
DATE: 7/30/2019

0 1/2 1
IF THIS BAR DOES NOT MEASURE 1" THEN DRAWING IS NOT TO FULL SCALE

6" 4' 2' 0' 5' 10'
3/16" = 1'-0"

PROJECT NO.
400530

95-H-101
SHEET
OF

COASTAL DEVELOPMENT PERMIT PLANS

PLOTTED: 7/30/2019 2:19:00 PM
D400530

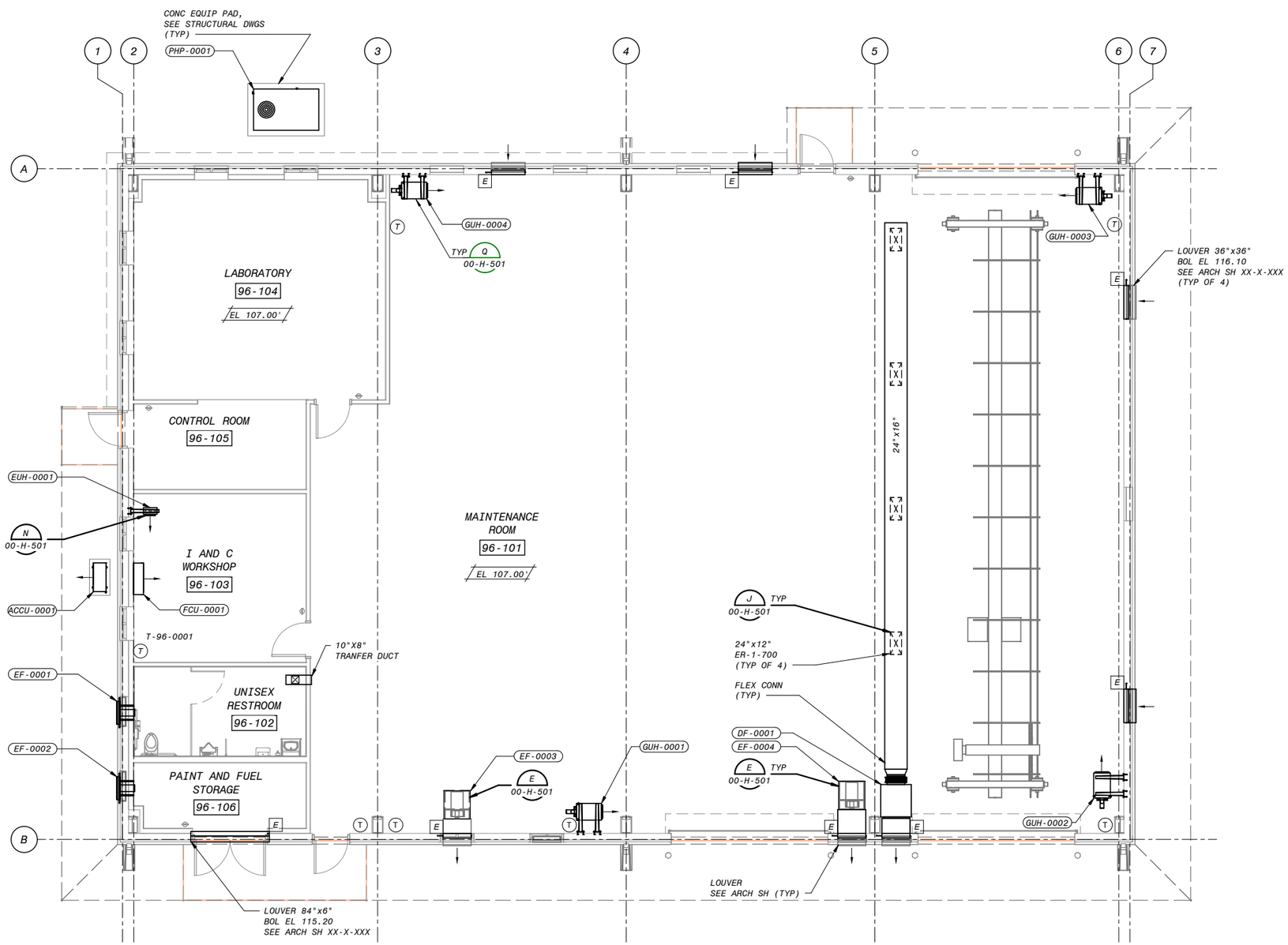


PLAN
3/16" = 1'-0"

6" 4' 2' 0' 5' 10'
3/16" = 1'-0"

COASTAL DEVELOPMENT PERMIT PLANS

| NO. | BY | CHK | APP |
|---|---|---|---|
| B | MDS | RWC | LDA |

60% SUBMITTAL
REVISIONS AND RECORD OF USE
7/30/2019
DATE

BLACK & VEATCH
JOINT VENTURE
FILANC
BLACK & VEATCH

CITY OF MORRO BAY
MORRO BAY WRF
RECLAMATION FACILITY (WRF)

MAINTENANCE BUILDING
HVAC
PLAN

DESIGNED: SM
DETAILED: MDS
CHECKED: LDA
APPROVED:
DATE: 7/30/2019

0 1/2 1
IF THIS BAR DOES NOT MEASURE 1" THEN DRAWING IS NOT TO FULL SCALE

PROJECT NO.
400530

96-H-101
SHEET
OF

PLOTTED: 7/30/2019 2:25:04 PM
D400530

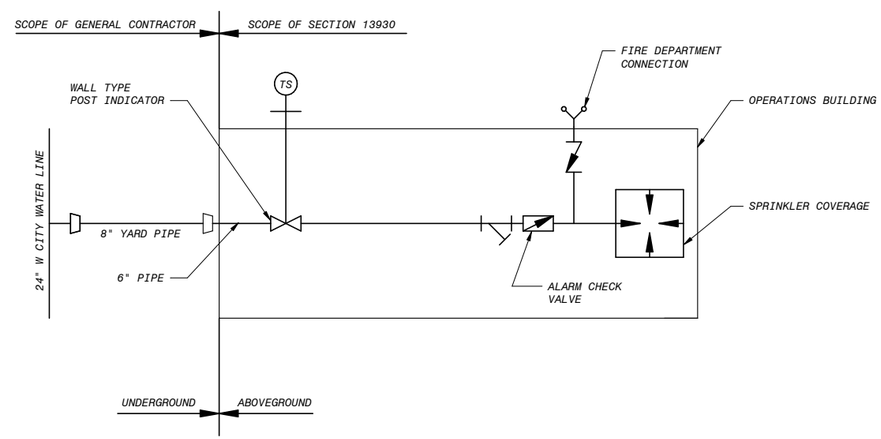


FIRE SUPPRESSION SYSTEM SCHEMATIC

NO SCALE

NOTES:

1. WET AUTOMATIC SPRINKLER SYSTEM TO BE DESIGNED AND INSTALLED PER NFPA 13
2. SPRINKLER SYSTEM SHALL BE DESIGNED FOR LIGHT HAZARD OCCUPANCY
3. FIRE DEPARTMENT CONNECTION FOR SPRINKLER SYSTEM WILL BE PROVIDED OUTSIDE OF THE BUILDING
4. SPRINKLER SUBCONTRACTOR SHALL BE RESPONSIBLE FOR EVERYTHING SHOWN ON THIS DWG
5. WATER SUPPLY TO BUILDING SPRINKLER RISER LOCATION WILL BE PROVIDED BY GENERAL CONTRACTOR. A FLANGED 6 INCH DUCTILE IRON CEMENT LINED PIPE (CLASS 350) CONNECTION 1 FT ABOVE FINISHED GRADE WILL BE PROVIDED BY GENERAL CONTRACTOR
6. FIRE CONTROL PANEL (FACP), SMOKE DETECTION, AND NOTIFICATION DEVICES TO BE INSTALLED BY OTHERS IN ACCORDANCE WITH NFPA 72.
7. WALL PENETRATION BY FIRE PROTECTION SYSTEM SHALL MAINTAIN FIRE RATING OF THE PENETRATED WALL PER ACCEPTED UL UL RATED SYSTEM.
8. WALL TYPE POST INDICATOR VALVE UPSTREAM OF SPRINKLER ALARM VALVE INSIDE THE BUILDING SHALL BE PROVIDED BY SPRINKLER SUBCONTRACTOR.

| NO. | DATE | REVISIONS AND RECORD OF USE | BY | CHK | APP |
|---|---|---|---|---|---|
| A | | 60% SUBMITTAL | TA | RWC | RWC |

BLACK & VEATCH

JOINT VENTURE

FILANC® BLACK & VEATCH

CITY OF MORRO BAY
MORRO BAY WRF
RECLAMATION FACILITY (WRF)

OPERATIONS BUILDING
FIRE SUPPRESSION SYSTEM
SCHEMATIC

DESIGNED: TA
DETAILED: BAR
CHECKED: RWC
APPROVED: RWC
DATE:

0 1/2 1

IF THIS BAR DOES NOT MEASURE 1" THEN DRAWING IS NOT TO FULL SCALE

PROJECT NO.
400530

95-F-001

SHEET
OF XXX

COASTAL DEVELOPMENT PERMIT PLANS

PLOTTED: 7/12/2019 7:21:49 AM

D400530

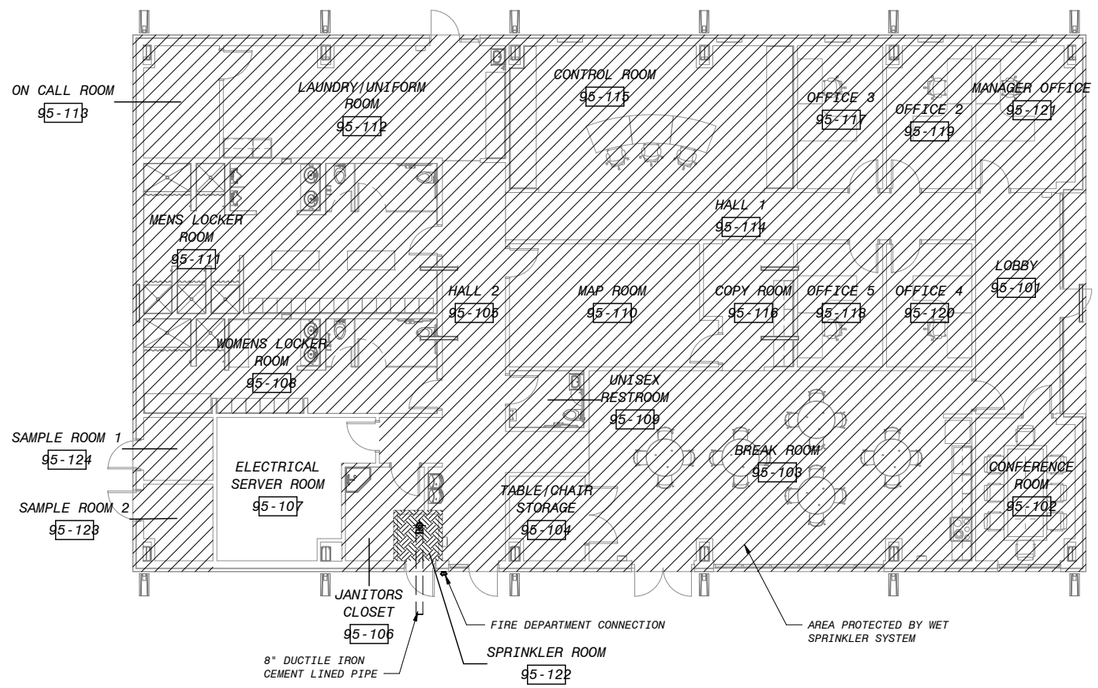


FIRE SUPPERSSION SYSTEM PLAN

1/8" = 1'-0"

NOTES:

1. WET AUTOMATIC SPRINKLER SYSTEM TO BE DESIGNED AND INSTALLED PER NFPA 13
2. SPRINKLER SYSTEM SHALL BE DESIGNED FOR LIGHT HAZARD OCCUPANCY
3. FIRE DEPARTMENT CONNECTION FOR SPRINKLER SYSTEM WILL BE PROVIDED OUTSIDE OF THE BUILDING
4. SPRINKLER SUBCONTRACTOR SHALL BE RESPONSIBLE FOR EVERYTHING SHOWN ON THIS DWG
5. WATER SUPPLY TO BUILDING SPRINKLER RISER LOCATION WILL BE PROVIDED BY GENERAL CONTRACTOR. A FLANGED 6 INCH DUCTILE IRON CEMENT LINED PIPE (CLASS 350) CONNECTION 1 FT ABOVE FINISHED GRADE WILL BE PROVIDED BY GENERAL CONTRACTOR
6. FIRE CONTROL PANEL (FACP), SMOKE DETECTION, AND NOTIFICATION DEVICES TO BE INSTALLED BY OTHERS IN ACCORDANCE WITH NFPA 72.
7. WALL PENETRATION BY FIRE PROTECTION SYSTEM SHALL MAINTAIN FIRE RATING OF THE PENETRATED WALL PER ACCEPTED UL UL RATED SYSTEM.
8. WALL TYPE POST INDICATOR VALVE UPSTREAM OF SPRINKLER ALARM VALVE INSIDE THE BUILDING SHALL BE PROVIDED BY SPRINKLER SUBCONTRACTOR.

| NO. | BY | CHK | APP |
|---|---|---|---|
| A | TA | RWC | RWC |

60% SUBMITTAL

REVISIONS AND RECORD OF USE

DATE

BLACK & VEATCH

JOINT VENTURE

FILANC

BLACK & VEATCH

CITY OF MORRO BAY
MORRO BAY WRF
RECLAMATION FACILITY (WRF)

OPERATIONS BUILDING
FIRE SUPRESSION SYSTEM
PLAN

DESIGNED: TA
DETAILED: BAR
CHECKED: RWC
APPROVED: RWC
DATE:

0 1/2 1

IF THIS BAR DOES NOT MEASURE 1" THEN DRAWING IS NOT TO FULL SCALE

PROJECT NO.
400530

95-F-101

SHEET
95-F-301 OF XXX

COASTAL DEVELOPMENT PERMIT PLANS

PLOTTED: 7/12/2019 7:21:52 AM

D400530

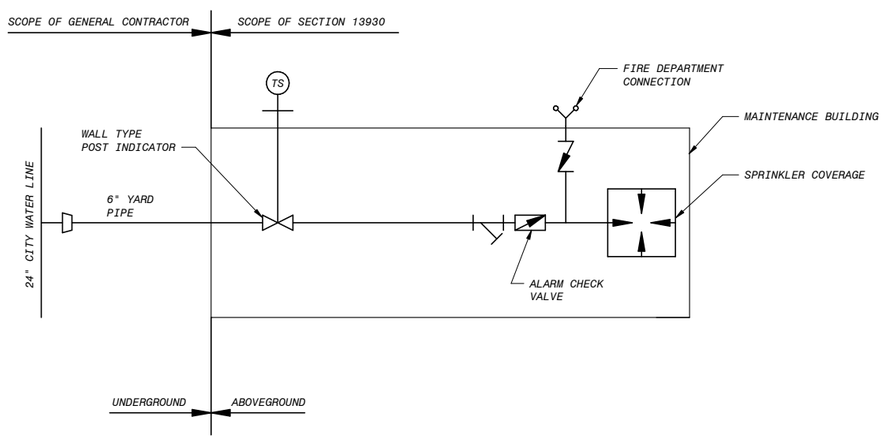


SCHEMATIC OF FIRE SUPPRESSION SYSTEM

NO SCALE

NOTES:

1. WET AUTOMATIC SPRINKLER SYSTEM TO BE DESIGNED AND INSTALLED PER NFPA 13
2. SPRINKLER SYSTEM SHALL BE DESIGNED FOR ORDINARY HAZARD GROUP 2 OCCUPANCY
3. FIRE DEPARTMENT CONNECTION FOR SPRINKLER SYSTEM WILL BE PROVIDED OUTSIDE OF THE BUILDING
4. SPRINKLER SUBCONTRACTOR SHALL BE RESPONSIBLE FOR EVERYTHING SHOWN ON THIS DWG
5. WATER SUPPLY TO BUILDING SPRINKLER RISER LOCATION WILL BE PROVIDED BY GENERAL CONTRACTOR. A FLANGED 6 INCH DUCTILE IRON CEMENT LINED PIPE (CLASS 350) CONNECTION 1 FT ABOVE FINISHED GRADE WILL BE PROVIDED BY GENERAL CONTRACTOR
6. FIRE CONTROL PANEL (FACP), SMOKE DETECTION, AND NOTIFICATION DEVICES TO BE INSTALLED BY OTHERS IN ACCORDANCE WITH NFPA 72.
7. WALL PENETRATION BY FIRE PROTECTION SYSTEM SHALL MAINTAIN FIRE RATING OF THE PENETRATED WALL PER ACCEPTED UL RATED SYSTEM.
8. WALL TYPE POST INDICATOR VALVE UPSTREAM OF SPRINKLER ALARM VALVE INSIDE THE BUILDING SHALL BE PROVIDED BY SPRINKLER SUBCONTRACTOR.

| DATE | REVISIONS AND RECORD OF USE | NO. | BY | CHK | APP |
|---|---|---|---|---|---|
| | 60% SUBMITTAL | A | TA | RWC | RWC |

BLACK & VEATCH
JOINT VENTURE
FILANC
BLACK & VEATCH

CITY OF MORRO BAY
MORRO BAY WRF
RECLAMATION FACILITY (WRF)

MAINTENANCE BUILDING
FIRE SUPPRESSION SYSTEM
SCHEMATIC

DESIGNED: TA
DETAILED: BAR
CHECKED: RWC
APPROVED: RWC
DATE:

0 1/2 1
IF THIS BAR DOES NOT MEASURE 1" THEN DRAWING IS NOT TO FULL SCALE

PROJECT NO.
400530

96-F-001
SHEET
OF XXX

COASTAL DEVELOPMENT PERMIT PLANS

PLOTTED: 7/11/2019 8:42:21 AM
D400530

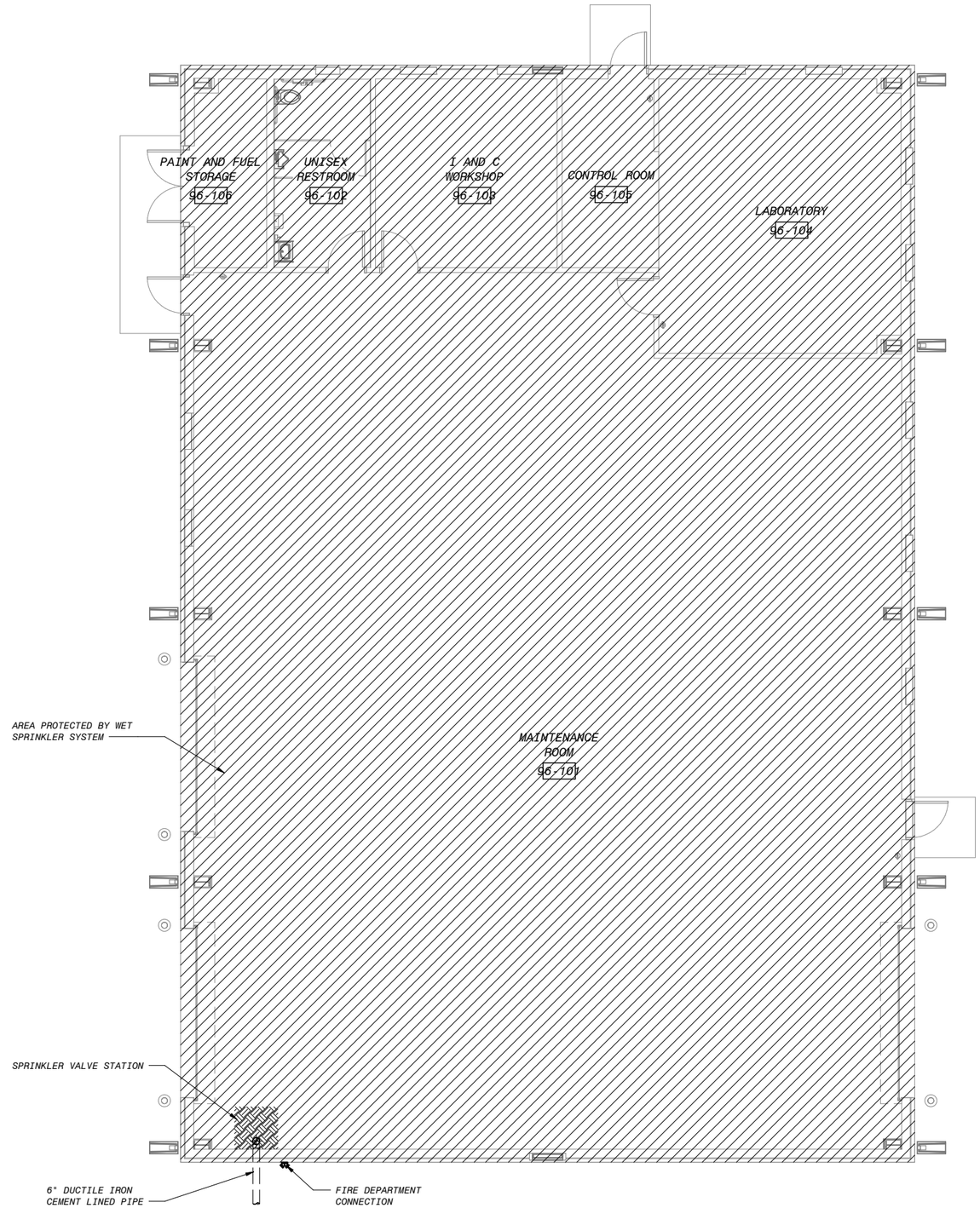


FIRE SUPPRESSION SYSTEM PLAN

3/16" = 1'-0"

NOTES:

1. WET AUTOMATIC SPRINKLER SYSTEM TO BE DESIGNED AND INSTALLED PER NFPA 13
2. SPRINKLER SYSTEM SHALL BE DESIGNED FOR ORDINARY HAZARD GROUP 2 OCCUPANCY
3. FIRE DEPARTMENT CONNECTION FOR SPRINKLER SYSTEM WILL BE PROVIDED OUTSIDE OF THE BUILDING
4. SPRINKLER SUBCONTRACTOR SHALL BE RESPONSIBLE FOR EVERYTHING SHOWN ON THIS DWG
5. WATER SUPPLY TO BUILDING SPRINKLER RISER LOCATION WILL BE PROVIDED BY GENERAL CONTRACTOR. A FLANGED 6 INCH DUCTILE IRON CEMENT LINED PIPE (CLASS 350) CONNECTION 1 FT ABOVE FINISHED GRADE WILL BE PROVIDED BY GENERAL CONTRACTOR
6. FIRE CONTROL PANEL (FACP), SMOKE DETECTION, AND NOTIFICATION DEVICES TO BE INSTALLED BY OTHERS IN ACCORDANCE WITH NFPA 72.
7. WALL PENETRATION BY FIRE PROTECTION SYSTEM SHALL MAINTAIN FIRE RATING OF THE PENETRATED WALL PER ACCEPTED UL RATED SYSTEM.
8. WALL TYPE POST INDICATOR VALVE UPSTREAM OF SPRINKLER ALARM VALVE INSIDE THE BUILDING SHALL BE PROVIDED BY SPRINKLER SUBCONTRACTOR.

COASTAL DEVELOPMENT PERMIT PLANS

| NO. | BY | CHK | APP |
|---|---|---|---|
| A | TA | RWC | RWC |

60% SUBMITTAL

REVISIONS AND RECORD OF USE

DATE

BLACK & VEATCH

JOINT VENTURE

FILANC

BLACK & VEATCH

CITY OF MORRO BAY
MORRO BAY WRF
RECLAMATION FACILITY (WRF)

MAINTENANCE BUILDING
FIRE SUPRESSION SYSTEM
PLAN

DESIGNED: TA
DETAILED: BAR
CHECKED: RWC
APPROVED: RWC
DATE:

0 1/2 1

IF THIS BAR DOES NOT MEASURE 1" THEN DRAWING IS NOT TO FULL SCALE

PROJECT NO.
400530

96-F-101

SHEET
OF XXX

PLOTTED: 7/11/2019 8:42:22 AM

D400530

## ONE-LINE DIAGRAM LEGEND

1500KVA
2.4KV Δ-480Y/277V
3%Z, 60HZ — TRANSFORMER WITH PRIMARY AND SECONDARY VOLTAGE, AND KVA RATING AS NOTED

CS, 20, 3P-60, 4#14,3/4", 22:3#8,#10G, 4#14,2" — CIRCUIT NO.22 WITH #8 INSULATED CONDUCTORS AND 1#10 GROUND WIRE FOR A 20HP MOTOR WITH 3 POLE, 60A, MOTOR DISCONNECT SWITCH AND 4#14 INSULATED CONDUCTORS FOR AUXILIARY ITEM, AS FOR EXAMPLE A CONTROL STATION, ALL IN 2" CONDUIT.

AUXILIARY ITEMS MAY NOT BE COMPLETELY SHOWN
HS, 20, 3P-60, 22:3#8,#10G, 4#14,2" — CONDUCTORS FOR AUXILIARY ITEM SHALL NOT PASS THROUGH MOTOR DISCONNECT SWITCH.

15 — AUXILIARY ITEMS MAY NOT BE COMPLETELY SHOWN — ONE-LINE SHOWING POWER AND CONTROL TO A PACKAGE UNIT, AS FOR EXAMPLE A STEAM GENERATOR OR AN AIR HANDLING UNIT, SHALL IMPLY THAT ANY AND ALL ASSOCIATED EQUIPMENT SHALL ALSO BE INSTALLED AND WIRED AS REQUIRED BY THE EQUIPMENT FURNISHED.

INDICATES THAT ALL OR PART OF CIRCUIT MAY BE ROUTED IN DUCT BANK OR UNDERGROUND. CONDUIT SIZE SHOWN ON ONE-LINE IS ABOVE GROUND AND/OR INSIDE OF STRUCTURE. SEE DUCT BANK SCHEDULE AND SECTIONS FOR CONDUIT SIZE OF UNDERGROUND PORTION OF CIRCUIT.

HIGH VOLTAGE DRAWOUT AIR OR VACUUM CIRCUIT BREAKER

3P-20 — LOW VOLTAGE AIR CIRCUIT BREAKER, 3 POLE, 20 AMPERE

S4 — SIZE 4 COMBINATION MAGNETIC MOTOR STARTER

LOW VOLTAGE DRAWOUT AIR CIRCUIT BREAKER

HIGH VOLTAGE DRAWOUT CONTACTOR

FUSE AND DISCONNECT SWITCH

S2 — SIZE 2 COMBINATION MAGNETIC MOTOR STARTER, REVERSING OR 2 SPEED

S1 — SIZE 1 COMBINATION REDUCED VOLTAGE AUTOTRANSFORMER

POTENTIAL TRANSFORMER

CURRENT TRANSFORMER

CURRENT OR POTENTIAL TEST SWITCH

G — GENERATOR

K — KIRK KEY INTERLOCK

E — ELECTRICAL INTERLOCK

R — RESISTOR

59G — PROTECTION RELAY WITH IEEE DEVICE FUNCTION AS SHOWN

V — SINGLE-FUNCTION METER

SURGE OR LIGHTNING ARRESTER

SURGE ARRESTER WITH SURGE CAPACITOR

GROUND CONNECTION

CABLE BUS

## SCHEMATIC SYMBOLS

WIRE CONNECTION POINT
EXTERNAL CONNECTION POINT
NORMALLY OPEN CONTACT
NORMALLY CLOSED CONTACT
STARTER, CONTACTOR OR RELAY COIL
NORMALLY OPEN PUSH BUTTON
NORMALLY CLOSED PUSH BUTTON
MAINTAINED PUSH BUTTON
NORMALLY CLOSED GEARED LIMIT SWITCH
NORMALLY OPEN GEARED LIMIT SWITCH
INDICATING LIGHT
INDICATING LIGHT WITH PUSH-TO-TEST
FUSE
POTENTIOMETER
CAPACITOR
DIODE
RESISTOR
CONTROL POWER TRANSFORMER
SWITCH
MS — MANUAL STARTER
OL — OVERLOAD
OVERLOAD
ELECTRODE
FLOAT SWITCH (CLOSING ON RISING LEVEL)
FLOAT SWITCH (OPENING ON RISING LEVEL)
P — PRESSURE SWITCH (CLOSING ON RISING PRESSURE)
P — PRESSURE SWITCH (OPENING ON RISING PRESSURE)
V — VACUUM SWITCH (CLOSING ON INCREASING VACUUM)
V — VACUUM SWITCH (OPENING ON INCREASING VACUUM)
TEMPERATURE SWITCH (CLOSING ON RISING TEMPERATURE)
TEMPERATURE SWITCH (OPENING ON RISING TEMPERATURE)
FLOW ACTUATED SWITCH (CLOSING ON INCREASE IN FLOW)
FLOW ACTUATED SWITCH (OPENING ON INCREASE IN FLOW)
ON TIME DELAY CONTACT (NORMALLY OPEN, WHEN THE COIL IS ENERGIZED THE CONTACT WILL CLOSE AFTER A TIME DELAY)
ON TIME DELAY CONTACT (NORMALLY CLOSED, WHEN THE COIL IS ENERGIZED THE CONTACT WILL OPEN AFTER A TIME DELAY)
OFF TIME DELAY CONTACT (NORMALLY OPEN, WHEN THE COIL IS DE-ENERGIZED THE CONTACT WILL OPEN AFTER A TIME DELAY)
OFF TIME DELAY CONTACT (NORMALLY CLOSED, WHEN THE COIL IS DE-ENERGIZED THE CONTACT WILL CLOSE AFTER A TIME DELAY)
TORQUE SWITCH (NORMALLY OPEN)
TORQUE SWITCH (NORMALLY CLOSED)
LIMIT SWITCH (NORMALLY OPEN)
LIMIT SWITCH (NORMALLY OPEN, HELD CLOSED)
LIMIT SWITCH (NORMALLY CLOSED)
LIMIT SWITCH (NORMALLY CLOSED, HELD OPEN)
DIFFERENTIAL PRESSURE SWITCH (NORMALLY OPEN, CLOSING ON INCREASING DIFF.)
DIFFERENTIAL PRESSURE SWITCH (NORMALLY CLOSED, OPENING ON INCREASING DIFF.)

## SWITCH & OUTLET SYMBOLS

S — SINGLE POLE SWITCH
$S_2$ — TWO POLE SWITCH
$S_{3A}$ — THREE-WAY SWITCH CONTROLLING LIGHTS WITH "A" DESIGNATION
$S_4$ — FOUR-WAY SWITCH
$S_M^{C1}$ — MOMENTARY SWITCH CONTROLLING CONTACTOR C1
DUPLEX RECEPTACLE 120 VOLT
SIMPLEX RECEPTACLE
RANGE RECEPTACLE
TWISTLOCK RECEPTACLE
30 — 240V, 1Ø RECEPTACLE, TYPICAL AMPERE RATING NOTED
60 — 480V, 3Ø WELDING RECEPTACLE, TYPICAL AMPERE RATING NOTED
120 VOLT DUPLEX RECEPTACLE (UPS)
DUPLEX FLOOR OUTLET
TELEPHONE OUTLET
TELEPHONE FLOOR OUTLET
CX — COAXIAL CABLE OUTLET
DATA NETWORK OUTLET
CAM TYPE RECEPTACLES
CABLES WITH CAM TYPE PLUGS

## MISCELLANEOUS SYMBOLS

STROBE
HORN & STROBE
HORN
T — THERMOSTAT
J — JUNCTION BOX
GROUND ROD
GROUND ROD WITH TEST WELL
GROUND CONNECTION
DISCONNECT SWITCH
COMBINATION STARTER
POWER PANEL
LIGHTING PANEL
MISCELLANEOUS PANEL
LIGHTING CONTACTOR
CAMERA
GLASS BREAK DETECTOR

## BREAKER DETAILS

DETAIL A

52 — 5KV, 1200A, 49KA — A 5KV CLASS MEDIUM-VOLTAGE, DRAWOUT, VACUUM OR AIR INSULATED CIRCUIT BREAKER WITH A 1,200 AMPERE FRAME. BREAKER HAS A 49,000 AMPERE MAXIMUM FAULT CURRENT INTERRUPTING RATING.

DETAIL B

3P 50 — A LOW VOLTAGE FIXED MOUNTED MOLDED CASE CIRCUIT BREAKER WITH A 50 AMPERE TRIP RATING.TRIP UNIT IS NON-ADJUSTABLE THERMAL-MAGNETIC TYPE.

1000AT, 1200AF, SST, LSIG, AFRD — A LOW VOLTAGE FIXED MOUNTED MOLDED CASE CIRCUIT BREAKER WITH A 1200 AMPERE FRAME AND A 1000 AMPERE TRIP RATING. TRIP UNIT IS ADJUSTABLE SOLID-STATE TYPE WITH LONG-TIME, SHORT-TIME, INSTANTANEOUS, GROUND FAULT AND ARC-FLASH REDUCTION PROTECTION FEATURES.

DETAIL C

800AT, 1000AS, 1600AF, AFRD — A LOW VOLTAGE, DRAWOUT, POWER OR INSULATED CASE CIRCUIT BREAKER WITH A 1600A FRAME AND SOLID-STATE TRIP UNIT. TRIP UNIT HAS A SENSOR MODULE RATED FOR 1000 AMPERES AND WITH A TRIP RATING OF 800 AMPERES AND ARC-FLASH REDUCTION PROTECTION FEATURES.

## CONDUIT & WIRING INSTALLATION LEGEND

CONDUIT EXPOSED
CONDUIT CONCEALED
CONDUIT TURNING UP. CONDUIT TURNING DOWN.
CONDUIT PLUGGED FLUSH. CONDUIT CAPPED.
L2 - 5 — TYPICAL FOR HOME RUN TO BE ROUTED TO LIGHTING PANEL L2 & CONNECTED TO CIRCUIT #5 (MINIMUM NO. 12 AWG CONDUCTORS AND 3/4" CONDUIT)
A — LIGHTING FIXTURE. REFER TO NUMBER OR LETTER IN FIXTURE SCHEDULE
11 — LINEAR FIXTURE. REFER TO NUMBER OR LETTER IN FIXTURE SCHEDULE.
LP1-3 — RECEPTACLE POWERED FROM LIGHTING PANEL LP1, CIRCUIT 3
A LP2-2 — LIGHTING FIXTURE POWERED FROM LIGHTING PANEL LP2, CIRCUIT 2 (NON-SWITCHED)
LPA-4 A, 11 — LIGHTING FIXTURE POWERED FROM LIGHTING PANEL LPA, CIRCUIT 4, VIA SWITCH A
E — UNDERGROUND CONCRETE ENCASED ELECTRICAL DUCT BANK
UNDERGROUND CONCRETE ENCASED ELECTRICAL BANK ROUTED BENEATH SLAB-ON-GRADE
EE — DIRECT BURIED CONDUIT
GROUND CONDUCTOR
UE — UNDERGROUND ELECTRIC
OH — OVERHEAD CIRCUIT

## COMMUNICATION SYMBOLS

HORN SPEAKER
DUAL HORN SPEAKER
WALL MOUNTED CONE SPEAKER
SK — CEILING MOUNTED CONE SPEAKER

## PROTECTION/RELAY DEVICE NUMBERS

25 - SYNCHRONIZING OR SYNCHRONISM-CHECK DEVICE
27 - UNDERVOLTAGE RELAY
32 - DIRECTIONAL POWER RELAY
37 - UNDERCURRENT OR UNDERPOWER RELAY
46 - REV. PHASE OR PHASE-BAL. CURRENT RELAY
47 - PHASE SEQ. OR PHASE BAL. VOLTAGE RELAY
49 - MACHINE OR TRANSFORMER THERMAL RELAY
50 - INSTANTANEOUS OVERCURRENT
51 - AC TIME OVERCURRENT RELAY
52 - AC CIRCUIT BREAKER
59 - OVERVOLTAGE RELAY
63 - PRESSURE SWITCH
64 - GROUND DETECTOR RELAY
67 - AC DIRECTIONAL OVERCURRENT RELAY
71 - LIQUID OR GAS LEVEL RELAY
81 - FREQUENCY RELAY
83 - AUTOMATIC SELECTIVE CONTROL OR TRANSFER RELAY
86 - LOCKOUT RELAY
87 - DIFFERENTIAL PROTECTIVE RELAY

## CONTROL SCHEMATIC LEGEND

PS — FIRE ALARM PULL STATION
F — FIRE ALARM HORN/STROBE LIGHT
F — FIRE ALARM BEACON
S — FIRE ALARM STROBE LIGHT
SD — FIRE ALARM SYSTEM SMOKE DETECTOR
HT — FIRE ALARM SYSTEM HEAT SENSOR
SFS — FIRE ALARM SYSTEM SPRINKLER FLOW SWITCH
STS — FIRE ALARM SYSTEM SPRINKLER TAMPER SWITCH
SPS — FIRE ALARM SYSTEM SPRINKLER PRESSURE SWITCH
FACP — FIRE ALARM CONTROL PANEL
FAAP — FIRE ALARM ANNUNCIATOR PANEL
FATC# — FIRE ALARM TERMINAL CABINET
DSD — FIRE ALARM SYSTEM DUCT SMOKE DETECTOR
PIV — FIRE ALARM SYSTEM POST INDICATOR VALVE SWITCH
PET — PHOTO ELECTRIC BEAM TRANSMITTER (SECURITY SYSTEM). ARROW INDICATES DIRECTION OF BEAM.
PER — PHOTO ELECTRIC BEAM RECEIVER. (SECURITY SYSTEM). ARROW INDICATES DIRECTION OF BEAM.
SSCP — SECURITY SYSTEM CONTROL PANEL
MS — MOTION SENSOR
CS — CONTACT SWITCH (DOOR)
DS — DOOR SWITCH
KC — CARD READER

| NO. | BY | CHK | APP |
|---|---|---|---|
| B | JSL | MJK | EVB |
| A | AM | MJK | EVB |

REVISIONS AND RECORD OF USE

| DATE | |
|---|---|
| 7/30/2019 | 60% SUBMITTAL |
| 3/5/2019 | 30% SUBMITTAL |

BLACK & VEATCH
JOINT VENTURE
FILANC
BLACK & VEATCH

CITY OF MORRO BAY
MORRO BAY WRF
RECLAMATION FACILITY (WRF)

GENERAL ELECTRICAL LEGENDS

DESIGNED: JSL
DETAILED: SBC
CHECKED:
APPROVED:
DATE:

0 1/2 1
IF THIS BAR DOES NOT MEASURE 1" THEN DRAWING IS NOT TO FULL SCALE

PROJECT NO. 400530

00-E-001
SHEET OF

COASTAL DEVELOPMENT PERMIT PLANS

F090000A
D400530
PLOTTED: 7/30/2019 1:07 AM FILE: C:\PWBatchPDF\Process\400530 - Morro Bay WRF\400530-00-E-001.dwg

## ELECTRICAL GENERAL NOTES

1. SOLID LINES ( ———————— ) INDICATE NEW WORK OR EQUIPMENT.
2. SCREENED LINES ( ———————— ) INDICATE EXISTING WORK OR EQUIPMENT.
3. DASHED LINES ( - - - - - - - - ) INDICATE FUTURE WORK OR EQUIPMENT.
4. REFER TO INDIVIDUAL DISCIPLINE CONTRACT DRAWINGS FOR ADDITIONAL ABBREVIATIONS, DETAILS, AND GENERAL DESIGN NOTES.
5. LEGEND SHEETS ARE GENERAL. SOME SYMBOLS AND ABBREVIATIONS MAY NOT BE UTILIZED ON THIS SPECIFIC PROJECT.
6. INFORMATION RELATED TO CIRCUIT IDENTIFICATION, WIRE & CONDUIT SIZES, AND ROUTING, IS ON THE FOLLOWING DRAWING TYPES.
   - A. ONE-LINE DIAGRAMS SHOW CIRCUIT IDENTIFICATION, WIRE QUANTITY AND SIZES, AND CONDUIT SIZE WITHIN STRUCTURES. ONE-LINE DIAGRAMS ALSO INDICATE ORIGIN AND DESTINATION OF CIRCUITS, AND IDENTIFY CIRCUITS ROUTED UNDERGROUND.
   - B. FOR CIRCUITS WITHOUT UNDERGROUND PORTIONS, BUILDING FLOOR PLANS SHOW LOCATION OF EQUIPMENT FOR DETERMINING CIRCUIT LENGTH WITHIN THE STRUCTURE. FOR CIRCUITS WITH UNDERGROUND PORTIONS, ANTICIPATED PENETRATION OF UNDERGROUND CONDUITS ARE SHOWN ON STRUCTURE PLANS FOR DETERMINING THE LENGTH OF THE IN-STRUCTURE PORTIONS OF CIRCUITS. BUILDING FLOOR PLANS MAY ALSO SHOW HOME RUNS FOR LIGHTING, RECEPTACLE, AND OTHER MISCELLANEOUS EQUIPMENT CIRCUITS.
   - C. SITE PLANS INDICATE THE GENERAL ROUTING OF UNDERGROUND CONDUITS AND DUCT BANKS. CIRCUITS ROUTED IN UNDERGROUND CONDUITS OR DUCT BANKS ARE INDICATED IN DUCT BANK SECTIONS REFERENCED ON THE SITE PLAN.
   - D. DUCT BANK SECTIONS AND SCHEDULES IDENTIFY CONDUIT SIZE, CONDUIT MATERIAL, ARRANGEMENT OF THE UNDERGROUND CONDUITS, AND CIRCUITS ROUTED IN EACH UNDERGROUND CONDUIT.

## AREA DESIGNATIONS

THE SPECIAL AREA DESIGNATION BOXES, AS DEFINED BELOW, ARE LOCATED ON THE PLAN DRAWINGS TO DEFINE ELECTRICAL INSTALLATION REQUIREMENTS. DESIGNATION BOXES ARE LOCATED WITHIN ROOM OR BELOW ROOM NUMBER. ALL INDOOR AREAS NOT INDICATED OTHERWISE ARE AREA TYPE 1 AND MINIMUM NEMA TYPE 1 ENCLOSURES.

| | |
|---|---|
| NEMA 3R | INTENDED FOR OUTDOOR USE, PROVIDES A DEGREE OF PROTECTION AGAINST FALLING RAIN AND ICE FORMATION. MEETS ROD ENTRY, RAIN, EXTERNAL ICING AND RUST RESISTANCE DESIGN TESTS. |
| NEMA 4X | CORROSIVE CHEMICAL FEED AND STORAGE ROOMS. CONDUIT SYSTEM SHALL BE EXPOSED SCHEDULE 80 PVC RIGID NON-METALLIC CONDUIT WITH PVC FITTINGS, BOXES AND ACCESSORIES. |
| NEMA 4 | INDOOR WET LOCATIONS SUCH AS VAULTS, HOSEDOWN AREAS, BASEMENTS, ETC. MINIMUM NEMA TYPE 4 ENCLOSURE FOR EQUIPMENT AND GASKETED FITTINGS IN A CONDUIT SYSTEM. |
| NEMA 7A | CLASS I, DIVISION 1 AREA AS DEFINED BY NEC. ALL EQUIPMENT AND CONDUIT SYSTEMS SHALL BE RATED FOR USE IN THIS AREA. |
| NEMA 7B | CLASS I, DIVISION 2, GROUP C AND D (METHANE, GASOLINE) AS DEFINED BY NEC. EQUIPMENT AND CONDUITS SYSTEMS SHALL BE RATED FOR USE IN THIS AREA. |
| NEMA 12 | INDOOR, DRY, DIRTY AREA. REQUIRES MINIMUM NEMA TYPE 12 GASKETED ENCLOSURES FOR ALL EQUIPMENT AND GASKETED FITTINGS IN CONDUIT SYSTEMS. |

## GENERAL REQUIREMENTS

1. THE SUBCONTRACTOR SHALL BE RESPONSIBLE FOR ROUTING ALL CONDUITS NOT SHOWN ON THE PLANS. THIS SHALL INCLUDE ALL CONDUITS SHOWN ON THE ONE-LINES AND HOME-RUNS SHOWN ON THE PLAN DRAWINGS. CONDUITS SHALL BE ROUTED AS DEFINED IN THE SPECIFICATION. CONDUITS SHALL BE PROVIDED BETWEEN THE CABLE TRAYS AND THE EQUIPMENT.
2. SPARE WIRES SHALL BE TAPED AND COILED AND LABELED TO INDICATE WHERE OTHER END OF SPARE WIRE IS LOCATED.
3. IF EQUIPMENT SUPPLIED BY MANUFACTURER HAS A LARGER LOAD THAN VALUE SHOWN, THE SUBCONTRACTOR SHALL ENLARGE THE CABLE CONDUIT AND ELECTRICAL EQUIPMENT, AS REQUIRED, TO ACCOMMODATE THE HIGHER VALUE.
4. THE SUBCONTRACTOR SHALL BE RESPONSIBLE FOR FURNISHING PROPERLY SIZED STARTER OVERLOADS FOR EQUIPMENT FURNISHED.
5. LIGHTING AND RECEPTACLE CIRCUITS DESIGNATED ON THE FLOOR PLANS ARE NOT SHOWN ON THE ONE-LINES. CONDUCTORS FOR LIGHTING, RECEPTACLES, AND MISCELLANEOUS 120VAC CIRCUITS SHALL BE MINIMUM NO. 12AWG. CONDUIT FOR LIGHTING, RECEPTACLES, AND MISCELLANEOUS 120VAC CIRCUITS SHALL BE MINIMUM 3/4".
6. IN AREAS WHERE THERE ARE OVERHEAD BRIDGE CRANES, HOISTS, ETC. NO CONDUITS SHALL BE RUN OVERHEAD THAT WILL INTERFERE WITH THE OPERATION OF THE EQUIPMENT.
7. THE SUBCONTRACTOR SHALL BE RESPONSIBLE FOR COORDINATING WITH OTHER SUBCONTRACTORS AND WITH THE EQUIPMENT FOR THE FINAL DUCKBANK CONDUIT STUBUP LOCATIONS.

## ELECTRICAL ABBREVIATIONS

### A

| | |
|---|---|
| A | AMBER, AMPERE, ALARM |
| AC | ALTERNATING CURRENT |
| ACB | AIR CIRCUIT BREAKER |
| ACR | ACCESS CARD READER |
| AF | AMPERE FRAME |
| AFD | ADJUSTABLE FREQUENCY DRIVE |
| AFRD | ARC-FLASH REDUCTION DEVICE |
| AM | AMMETER |
| ANN | ANNUNCIATOR |
| AR | ALARM RELAY |
| AS | AMMETER SWITCH, AMPERE SENSOR |
| AT | AMPERE TRIP |
| ATS | AUTOMATIC TRANSFER SWITCH |
| AUX | AUXILIARY |
| AWG | AMERICAN WIRE GAUGE |

### B

| | |
|---|---|
| B | BUS |
| BC | BATTERY CHARGER |
| BKR | BREAKER |
| BR | BRAKE |
| BT | BEARING TEMPERATURE |

### C

| | |
|---|---|
| C | CLOSE, COUNTER, CONTACTOR, CONTROL, CCTV CAMERA |
| CAP | CAPACITOR |
| CB | CIRCUIT BREAKER |
| CB"A" | CIRCUIT BREAKER AUXILIARY CONTACT (OPEN WHEN BREAKER IS OPEN) |
| CB"B" | CIRCUIT BREAKER AUXILIARY CONTACT (CLOSED WHEN BREAKER IS OPEN) |
| CD | CONTROL DAMPER |
| CHH | CONTROL HANDHOLE |
| CI | CELL INTERLOCK |
| CKT | CIRCUIT |
| CL2 | CHLORINE |
| CMH | CONTROL MANHOLE |
| COS | CABLE OPERATED SWITCH |
| CP | CONTROL PANEL |
| CPT | CONTROL POWER TRANSFORMER |
| CR | CURRENT OF CONTROL RELAY, CARD READER |
| CS | CONTROL STATION |
| CT | CYCLE TIMER OR CURRENT TRANSFORMER |
| CTC | CYCLE TIMER CLUTCH |
| CTM | CYCLE TIMER MONITOR |
| 2/C | 2 CONDUCTOR |
| 4"C | 4" CONDUIT |

### D

| | |
|---|---|
| DC | DIRECT CURRENT, DOOR CONTACT |
| DI | DOOR INTERLOCK |
| DM | DAMPER MOTOR, DEMAND METER, DIMMER SWITCH |
| DPDT | DOUBLE POLE DOUBLE THROW |
| DPST | DOUBLE POLE SINGLE THROW |
| DPR | DIFFERENTIAL PRESSURE REGULATOR |
| DPS | DIFFERENTIAL PRESSURE SWITCH |
| DS | DISCONNECT SWITCH, DOOR SWITCH, DESKTOP STATION |
| DVLS | DISCHARGE VALVE LIMIT SWITCH |

### E

| | |
|---|---|
| E | ELECTRIC OPERATOR FOR CONTROL DAMPER OR VALVE |
| EC | EMPTY CONDUIT |
| EDS | ELECTRICAL DOOR STRIKE |
| EG | ENGINE GENERATOR |
| EGCP | ENGINE GENERATOR CONTROL PANEL |
| EL | ELEVATION, EMERGENCY LIGHT |
| EMH | ELECTRICAL MANHOLE |
| ER | ELECTRODE RELAY |
| ES | END SWITCH, REQUEST TO EXIT SENSOR |
| E-STOP | EMERGENCY STOP |
| ETM | ELAPSED TIME METER |
| EX | EXISTING |
| EXP | EXPLOSION PROOF |

### F

| | |
|---|---|
| F | FORWARD, FIELD |
| FO | FIBER OPTIC |
| FPR | FEEDER PROTECTION RELAY |
| FS | FLOW SWITCH |

### G

| | |
|---|---|
| G | GREEN, GROUND, GENERATOR, GROUND FAULT |
| GAC | GRANULAR ACTIVE CARBON |
| GD | GROUND DETECTOR |
| GEN | GENERATOR |
| GFI | GROUND FAULT INTERRUPTOR |
| GLS | GEARED LIMIT SWITCH |
| GPR | GENERATOR PROTECTION RELAY |
| GND | GROUND |
| #8G | #8 GROUND WIRE |

### H

| | |
|---|---|
| H | HIGH, HUMIDISTAT |
| HH | HANDHOLE |
| HMT | HIGH MOTOR TEMPERATURE |
| HOA | HAND-OFF-AUTO |
| HOR | HAND-OFF-REMOTE |
| HP | HORSEPOWER |
| HS | HAND STATION |
| HWCO | HIGH WATER CUTOFF |
| HZ | HERTZ (CYCLE) |

### I

| | |
|---|---|
| I/O | INPUT/OUTPUT |
| I | INSTANTANEOUS |
| IJB | INTERCOM JUNCTION BOX |

### J

| | |
|---|---|
| J,JB | JUNCTION BOX |

### K

| | |
|---|---|
| K | KEY INTERLOCK |
| KAIC | THOUSAND AMPERES INTERRUPTING CURRENT |
| KCMIL | THOUSAND CIRCULAR MIL |
| KO | KEY OPERATED |
| KV | KILOVOLT |
| KVA | KILOVOLT AMPERE |
| KVAR | KILOVAR |
| KW | KILOWATT |
| KWH | KILOWATT HOUR |

### L

| | |
|---|---|
| L | LOW, LEVEL, LONG-TIME |
| LA | LIGHTNING ARRESTER |
| LAN | LOCAL AREA NETWORK |
| LC | LIGHTING CONTACTOR |
| LCP | LOCAL CONTROL PANEL |
| LCS | LOCAL CONTROL STATION |
| LOA | LOCAL-OFF-AUTO |
| LOR | LOCAL-OFF-REMOTE |
| LOS | LOCK OUT STOP |
| LP | LIGHTING PANEL |
| LS | LIMIT OR LEVEL SWITCH |
| LTG | LIGHTING |
| LVHH | LOW VOLTAGE HANDHOLE |
| LVMH | LOW VOLTAGE MANHOLE |
| LWCO | LOW WATER CUTOFF |

### M

| | |
|---|---|
| M | MAGNETIC MOTOR STARTER |
| MA | MILLIAMPERE |
| MCB | MAIN CIRCUIT BREAKER |
| MCC | MOTOR CONTROL CENTER |
| MCLU | MOTOR CONTROL LINEUP |
| MD | MOISTURE DETECTOR, MOTION DETECTOR |
| MDL | MAGNETIC DOOR LOCK |
| MFR | MANUFACTURER |
| MH | MANHOLE, MOUNTING HEIGHT |
| MOV | MOTOR OPERATED VALVE |
| MPR | MOTOR PROTECTION RELAY |
| MS | MANUAL MOTOR STARTER |
| MSH | MOTOR SPACE HEATER, MOISTURE SWITCH HIGH |
| MTS | MANUAL TRANSFER SWITCH |
| MV | MILLIVOLT, MEDIUM VOLTAGE |
| MVA | MEGAVOLT AMPERE |
| MVHH | MEDIUM VOLTAGE HANDHOLE |

### N

| | |
|---|---|
| N | NEUTRAL |
| NGR | NEUTRAL GROUNDING RESISTOR |
| NGT | NEUTRAL GROUNDING TRANSFORMER |
| NC | NORMALLY CLOSED |
| NO | NORMALLY OPEN, NUMBER |

### O

| | |
|---|---|
| O | OPEN |
| OL | OVERLOAD |
| OOA | ON-OFF-AUTO |
| OOR | ON-OFF-REMOTE |
| O/U | OVER/UNDER |

### P

| | |
|---|---|
| P | PRIMARY, POWER, POLE |
| PCS | PLANT CONTROL SYSTEM |
| PB | PUSH BUTTON, PULL BOX |
| PF | POWER FACTOR |
| PFCC | POWER FACTOR CORRECTION CAPACITOR |
| PH | PHASE |
| PL | PILOT LIGHT |
| PLC | PROGRAMMABLE LOGIC CONTROLLER |
| PP | POWER PANEL |
| PR | PAIR |
| PRS | PROXIMITY SWITCH |
| PS | PRESSURE SWITCH |
| PT | POTENTIAL TRANSFORMER, PROGRAM TIMER |

### Q

| | |
|---|---|
| | NOT USED |

### R

| | |
|---|---|
| R | RED, RAISE, RELAY, REVERSE |
| RECP | RECEPTACLE |
| RES | RESISTOR |
| RH | REMOTE HANDSET |
| RT | REPEATING TIMER |
| RTD | RESISTANCE TEMPERATURE DETECTOR |
| RTU | REMOTE TERMINAL UNIT |
| RVSS | REDUCED VOLTAGE SOLID STATE STARTER |
| ROSS | RO SYSTEM SUPPLIER |

### S

| | |
|---|---|
| S | SHORT-TIME, SHIELDED, STARTER |
| SA | SURGE ARRESTER, SPEAKER AMPLIFIER |
| SCADA | SUPERVISORY CONTROL AND DATA ACQUISITION |
| SF6 | SULFUR HEXAFLOURIDE |
| SH | SPACE HEATER |
| SN | SOLID NEUTRAL |
| SO | SOLENOID OILER |
| SP | SINGLE POLE |
| SPD | SURGE PROTECTION DEVICE |
| SPDT | SINGLE POLE DOUBLE THROW |
| SPST | SINGLE POLE SINGLE THROW |
| SS | SELECTOR SWITCH, START/STOP |
| SSM | SOLID-STATE METERING |
| SSS | SOLID STATE STARTER |
| SST | SOLID-STATE TRIP |
| SUPV | SUPERVISORY CONTROL |
| SV | SOLENOID VALVE |
| SWB,SWBD | SWITCHBOARD |
| SWG,SWGR | SWITCHGEAR |

### T

| | |
|---|---|
| T | THERMOSTAT, TIMER, TOTALIZER, TRANSFORMER |
| TACH | TACHOMETER |
| TB | TERMINAL BLOCK |
| TC | TIMER CLUTCH |
| TD | TIME DELAY RELAY |
| TEMP | TEMPERATURE |
| TM | TIMER MOTOR |
| TQ | TORQUE |
| TR | TIMER RELAY, TRIAD |
| TSH | TEMPERATURE SWITCH HIGH |
| TTB | TELEPHONE TERMINAL BOARD |

### U

| | |
|---|---|
| UG | UNDERGROUND |
| UPS | UNINTERRUPTIBLE POWER SUPPLY |
| UTS | UP TO SPEED |

### V

| | |
|---|---|
| V | VOLTS, VOLTAGE RESTRAINED |
| VA | VOLT AMPERE |
| VAR | VARMETER |
| VFD | VARIABLE FREQUENCY DRIVE |
| VI | VACUUM INTERRUPTER |
| VLS | VALVE LIMIT SWITCH |
| VM | VOLTMETER |
| VPI | VALVE POSITION INDICATOR |
| VS | VOLTMETER SWITCH |

### W

| | |
|---|---|
| W | WHITE, WATTS |
| WH | WATTHOUR METER |
| WM | WATT METER |
| WP | WEATHERPROOF |
| WPI | WEATHERPROOF IN-USE |
| WS | WALL STATION |

### X

| | |
|---|---|
| X | AUXILIARY RELAY |
| XFMR | TRANSFORMER |
| XP | EXPLOSION PROOF |

### Y

| | |
|---|---|
| Y | YELLOW |

### Z

| | |
|---|---|
| Z | AUXILIARY RELAY, IMPEDANCE |
| ZS | POSITION SWITCH |
| ZSS | ZERO SPEED SWITCH |

| | |
|---|---|
| 1-1PR#16S | ONE, SINGLE PAIR, TWISTED SHIELDED #16 CABLE |
| 3-7/C#14 | THREE, SINGLE, SEVEN CONDUCTOR #14 MULTICONDUCTOR CONTROL CABLES |
| 1-1TR#16S | ONE, TRIAD, TWISTED SHIELDED #16 CABLE |

COASTAL DEVELOPMENT PERMIT PLANS

| NO. | BY | CHK | APP |
|---|---|---|---|
| B | JSL | MJK | EVB |
| A | AM | MJK | EVB |

REVISIONS AND RECORD OF USE

| DATE | |
|---|---|
| 7/30/2019 | 60% SUBMITTAL |
| 3/5/2019 | 30% SUBMITTAL |

BLACK & VEATCH

JOINT VENTURE

FILANC

BLACK & VEATCH

CITY OF MORRO BAY
MORRO BAY WRF
RECLAMATION FACILITY (WRF)

GENERAL
ELECTRICAL
ABBREVIATION AND GENERAL NOTES

DESIGNED: JSL
DETAILED: SBC
CHECKED:
APPROVED:
DATE:

0 1/2 1
IF THIS BAR DOES NOT MEASURE 1" THEN DRAWING IS NOT TO FULL SCALE

PROJECT NO. 400530

00-E-002
SHEET
OF

F09000A
D400530
PLOTTED: 7/30/2019 1:07 AM FILE: C:\PWBatchPDF\Process\400530 - Morro Bay WRF\400530-00-E-002.dwg

NOTES:

1. SEE DRAWINGS 00-E-001 AND 00-E-002 FOR ELECTRICAL LEGEND, ABBREVIATIONS AND NOTES.

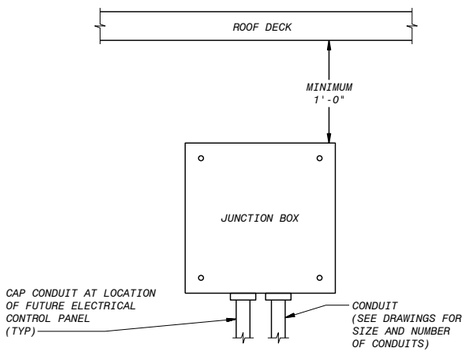


TYPICAL BELOW ROOF DECK TERMINATION MOUNTING DETAIL
NO SCALE

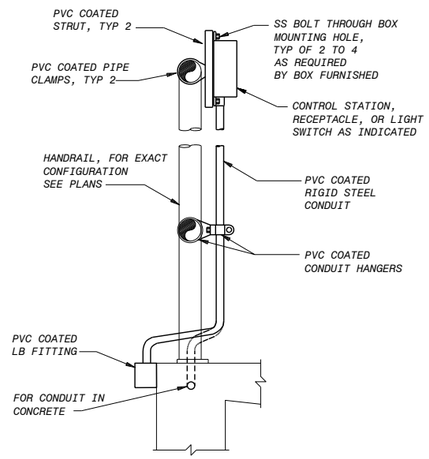


TYPICAL HANDRAIL MOUNTING DETAIL
NO SCALE

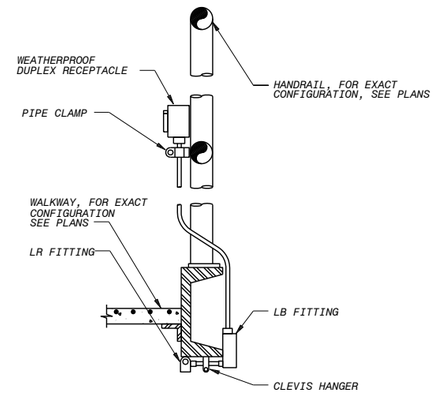


TYPICAL RECEPTACLE MOUNTING AT METAL WALKWAY DETAIL
NO SCALE

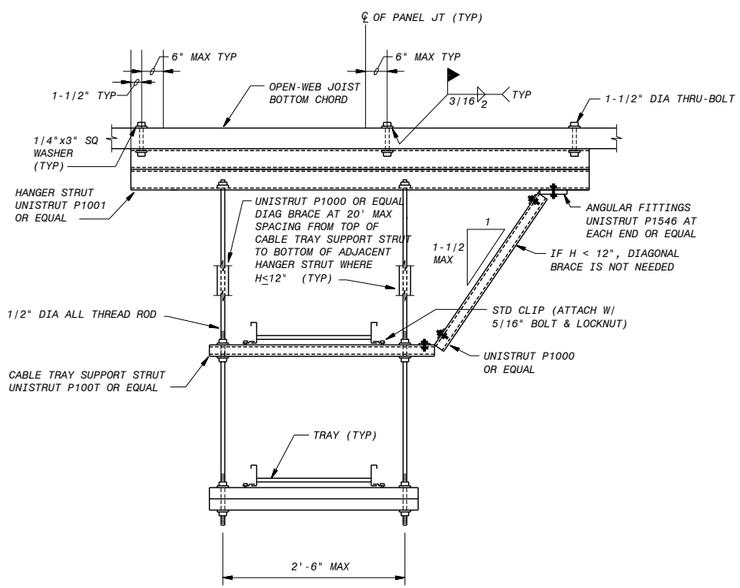


METAL FRAMING CHANNEL TRAY SUPPORT
NO SCALE

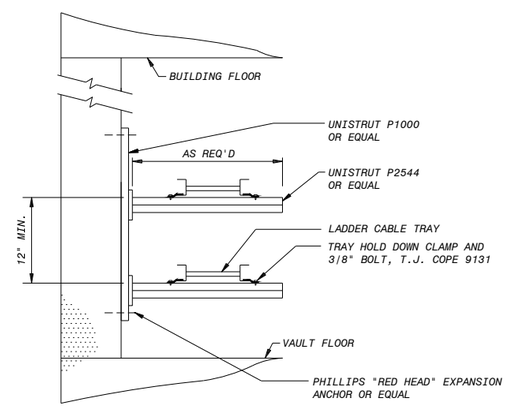


TRAY WALL SUPPORT DETAIL
NO SCALE

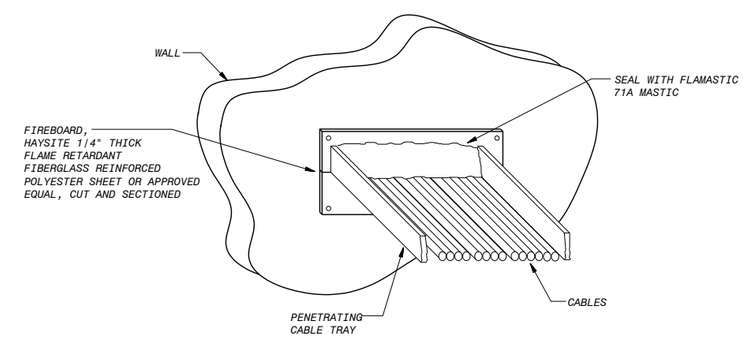


TYPICAL CABLE TRAY PENETRATION FIRE BARRIER
NO SCALE

| NO. | BY | CHK | APP |
|---|---|---|---|
| B | JSL | MJK | EVB |

| DATE | REVISIONS AND RECORD OF USE |
|---|---|
| 7/30/2019 | 60% SUBMITTAL |

BLACK & VEATCH
JOINT VENTURE
FILANC
BLACK & VEATCH

CITY OF MORRO BAY
MORRO BAY WRF
RECLAMATION FACILITY (WRF)

GENERAL
ELECTRICAL
INSATLLATION DETAILS

DESIGNED: JSL
DETAILED: SBC
CHECKED:
APPROVED:
DATE:

0 1/2 1
IF THIS BAR DOES NOT MEASURE 1" THEN DRAWING IS NOT TO FULL SCALE

PROJECT NO.
400530

00-E-501
SHEET
1 OF 3

COASTAL DEVELOPMENT PERMIT PLANS

F09000A
D400530
PLOTTED: 7/30/2019 1:08 AM FILE: C:\PWBatchPDF\Process\400530 - Morro Bay WRF\400530-00-E-501.dwg

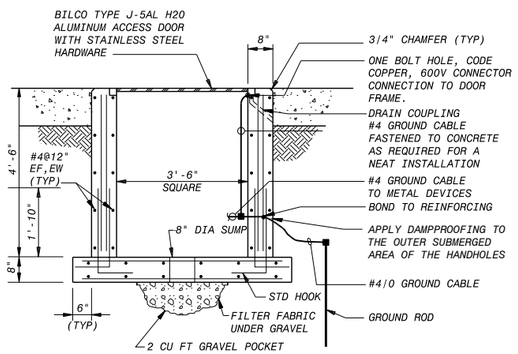


## TYPICAL TRAFFIC RATED ELECTRICAL HANDHOLE DETAIL

NO SCALE

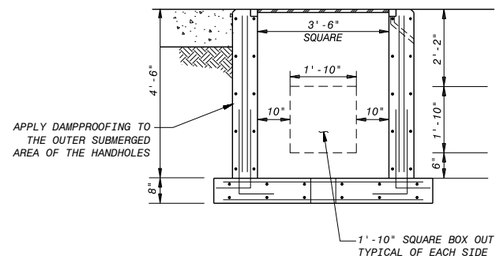


## TRAFFIC RATED HANDHOLE DUCTBANK BOX OUT LOCATION DETAIL

NO SCALE

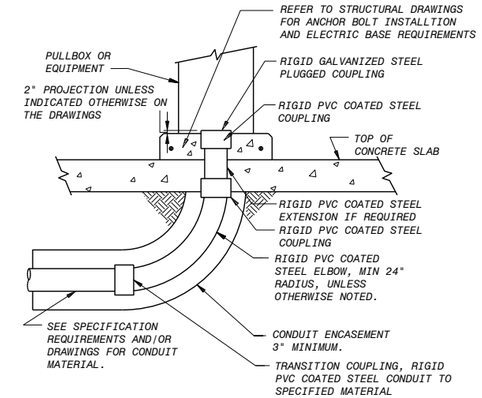


## TYPICAL CONDUIT RISER TERMINATING IN CONCRETE SLAB WITH EQUIPMENT BASE

NO SCALE

**NOTE:**

1. SEE DRAWINGS 00-E-001 AND 00-E-002 FOR ELECTRICAL LEGEND, ABBREVIATIONS AND NOTES.

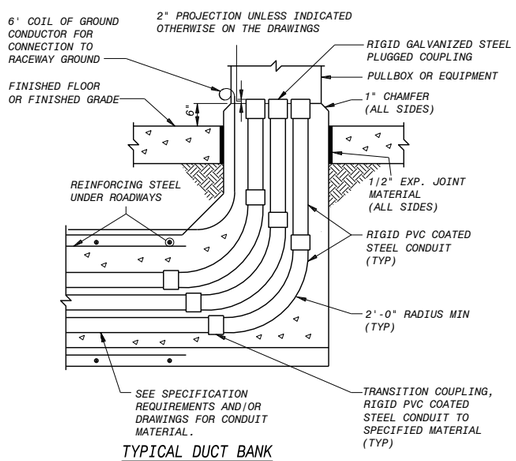


## TYPICAL DUCT BANK RISER CONSTRUCTION

NO SCALE

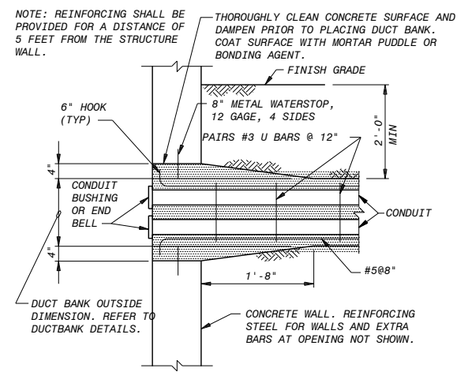


## TYPICAL UNDERGROUND DUCT BANK ENTRANCE DETAIL

NO SCALE

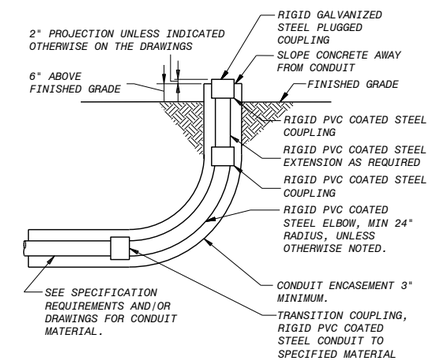


## TYPICAL CONDUIT RISER TERMINATING IN SOIL

NO SCALE

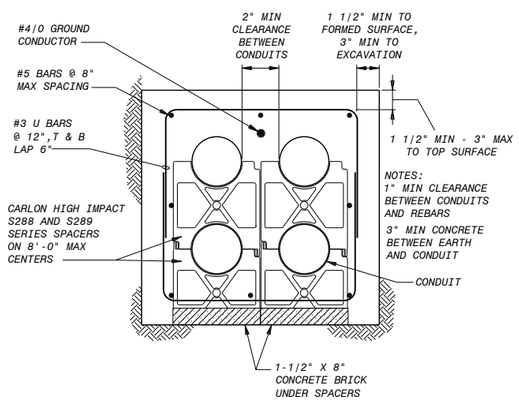


## TYPICAL REINFORCED DUCT BANK SECTION

NO SCALE

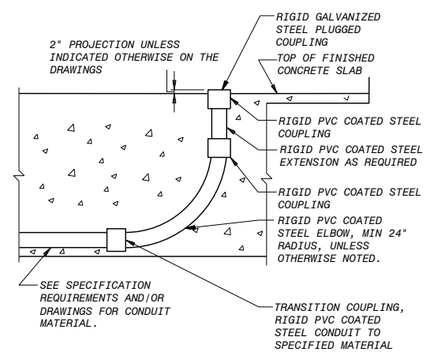


## TYPICAL EMBEDDED CONDUIT RISER TERMINATING IN FOUNDATION

NO SCALE

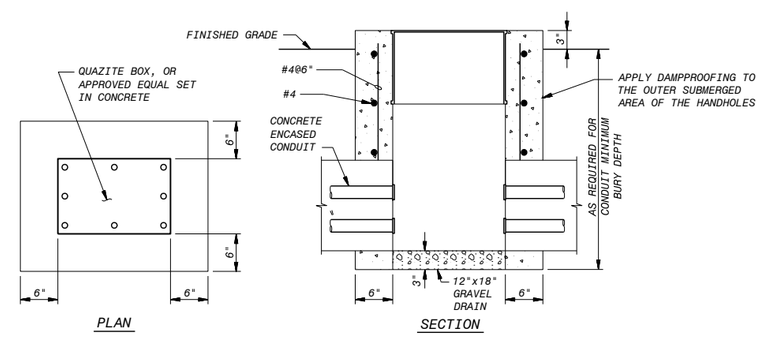


## TYPICAL UNDERGROUND (UG) PULL BOX DETAIL

NO SCALE

# COASTAL DEVELOPMENT PERMIT PLANS

| NO. | BY | CHK | APD |
|---|---|---|---|
| B | JSL | MJK | EVB |

REVISIONS AND RECORD OF USE

| DATE | |
|---|---|
| 7/30/2019 | 60% SUBMITTAL |

BLACK & VEATCH JOINT VENTURE

FILANC

BLACK & VEATCH

CITY OF MORRO BAY
MORRO BAY WRF
RECLAMATION FACILITY (WRF)

GENERAL
ELECTRICAL
INSATLLATION DETAILS

DESIGNED: JSL
DETAILED: SBC
CHECKED:
APPROVED:
DATE:

0 1/2 1
IF THIS BAR DOES NOT MEASURE 1" THEN DRAWING IS NOT TO FULL SCALE

PROJECT NO. 400530

00-E-502
SHEET 2 OF 3

F09000A
D400530
PLOTTED: 7/30/2019 1:08 AM FILE: C:\PWBatchPDF\Process\400530 - Morro Bay WRF\400530-00-E-502.dwg

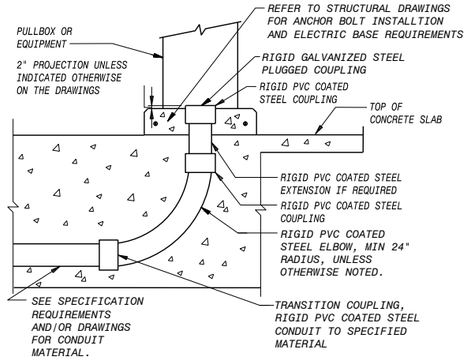


## TYPICAL EMBEDDED CONDUIT RISER TERMINATING IN FOUNDATION WITH EQUIPMENT BASE

NO SCALE

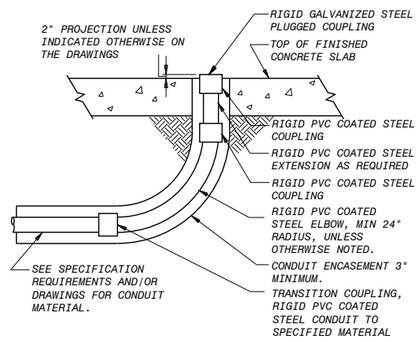


## TYPICAL CONDUIT RISER TERMINATING IN CONCRETE SLAB

NO SCALE

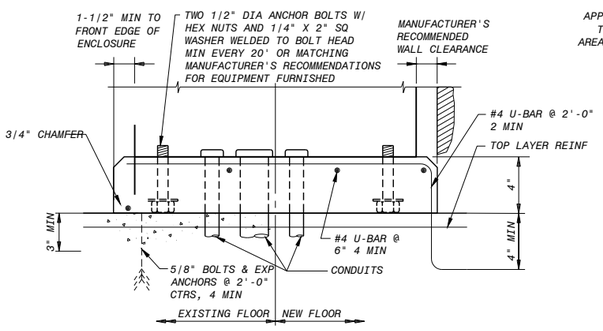


## ELECTRICAL EQUIPMENT BASE

NO SCALE

NOTE:UNLESS OTHERWISE NOTED, ALL INDOOR FLOOR-MOUNTED ELECTRICAL EQUIPMENT, INCLUDING SWITCHGEAR, SWITCHBOARDS, MOTOR CONTROL CENTERS, ADJUSTABLE FREQUENCY DRIVES, INSTRUMENT CABINETS, ETC., SHALL BE PROVIDED WITH EQUIPMENT BASES.

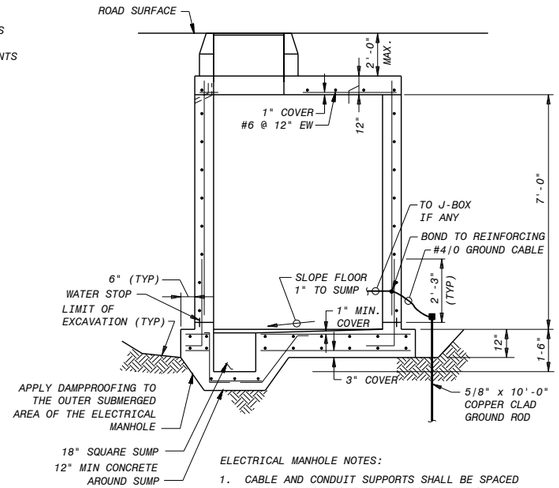


ELECTRICAL MANHOLE NOTES:

1. CABLE AND CONDUIT SUPPORTS SHALL BE SPACED AT 2'-0" HORIZONTAL CENTERS IN WALLS AND SHALL BEGIN 2'-0" FROM FLOOR.
2. SUPPORTS IN CEILINGS SHALL RUN FROM WALL TO WALL.
3. OPENING SHALL BE PROVIDED IN MANHOLE WALLS FOR CONDUIT BANK ENTRANCE AS REQUIRED.
4. ALL REINFORCING ON THIS DETAIL SHALL BE #6@12" UNLESS NOTED OTHERWISE. CENTER VERTICAL REINFORCING IN THE WALLS.
5. CONCRETE TO BE ROUGH AND CLEAN AT CONSTRUCTION JOINT FACES.

## TRAFFIC RATED ELECTRICAL MANHOLE SECTION (2)

NO SCALE SUITABLE FOR ROADWAY LOCATIONS

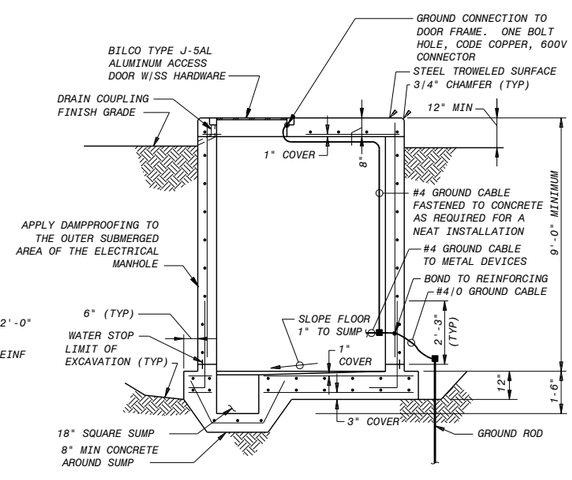


ELECTRICAL MANHOLE NOTES:

1. CABLE AND CONDUIT SUPPORTS SHALL BE SPACED AT 2'-0" HORIZONTAL CENTERS IN WALLS AND SHALL BEGIN 2'-0" FROM FLOOR.
2. SUPPORTS IN CEILINGS SHALL RUN FROM WALL TO WALL.
3. OPENING SHALL BE PROVIDED IN MANHOLE WALLS FOR CONDUIT BANK ENTRANCE AS REQUIRED.
4. ALL REINFORCING ON THIS DETAIL SHALL BE #5@12" OM CENTER UNLESS NOTED OTHERWISE. CENTER VERTICAL REINFORCING IN THE WALLS.
5. CONCRETE TO BE ROUGH AND CLEAN AT CONSTRUCTION JOINT FACES.

## ELECTRICAL MANHOLE SECTION (1)

NO SCALE NOT SUITABLE FOR ROADWAY LOCATIONS

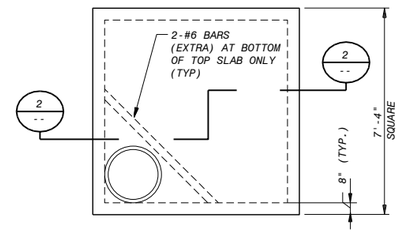


## TYPICAL TRAFFIC RATED ELECTRICAL MANHOLE

NO SCALE SUITABLE FOR ROADWAY LOCATIONS

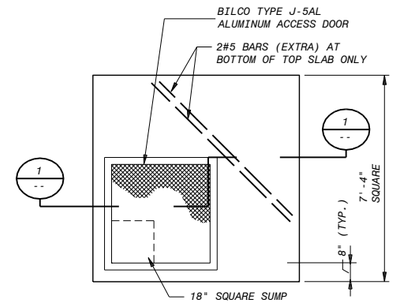


## TYPICAL ELECTRICAL MANHOLE (SINGLE CHAMBER)

NO SCALE NOT SUITABLE FOR ROADWAY LOCATIONS

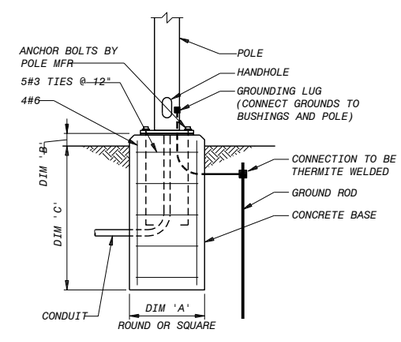


## TYPICAL POLE MOUNTING DETAIL

NO SCALE

| A | B | C | POLE LENGTH |
|---|---|---|---|
| 1'-0" | 2" | SEE NOTE | 10' TO 12' |
| 1'-6" | 2" | | 12' TO 20' |

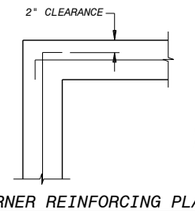


## CORNER REINFORCING PLAN

NO SCALE

NOTE:10% OF LENGTH PLUS 3'

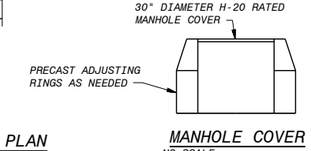


## MANHOLE COVER

NO SCALE

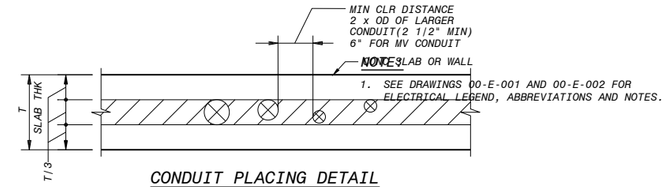


NOTES:

1. SEE DRAWINGS 00-E-001 AND 00-E-002 FOR ELECTRICAL LEGEND, ABBREVIATIONS AND NOTES.

## CONDUIT PLACING DETAIL

NO SCALE

NOTES:

1. PLACE CONDUIT ONLY IN SHADED AREA
2. FOR CONDUIT REQUIREMENTS SEE THE ELECTRICAL DRAWINGS AND SPECIFICATIONS.

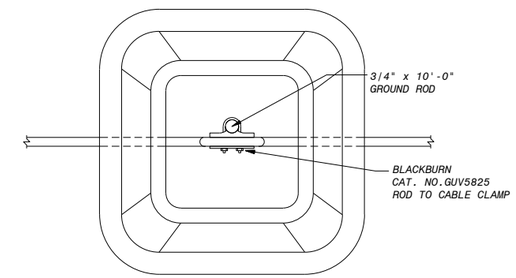


## PLAN

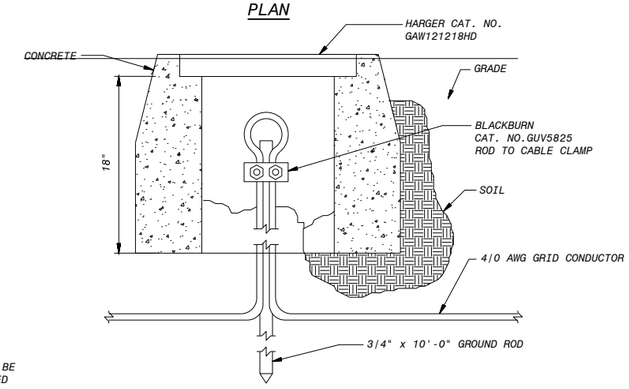


## ELEVATION

## TYPICAL GROUND TEST STATION

NO SCALE

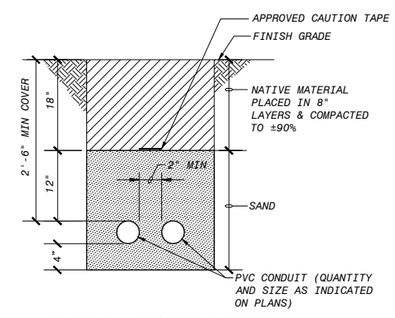


## TYPICAL DIRECT BURIED CONDUIT SECTION

NO SCALE

| NO. | BY | CHK | APP |
|---|---|---|---|
| B | JSL | MJK | EVB |

REVISIONS AND RECORD OF USE

| DATE | |
|---|---|
| 7/30/2019 | 60% SUBMITTAL |

BLACK & VEATCH

JOINT VENTURE

FILANC

BLACK & VEATCH

CITY OF MORRO BAY
MORRO BAY WRF
RECLAMATION FACILITY (WRF)

GENERAL
ELECTRICAL
INSATLLATION DETAILS

DESIGNED: JSL
DETAILED: SBC
CHECKED:
APPROVED:
DATE:

0 1/2 1
IF THIS BAR DOES NOT MEASURE 1" THEN DRAWING IS NOT TO FULL SCALE

PROJECT NO.
400530

00-E-503
SHEET
3 OF 3

# COASTAL DEVELOPMENT PERMIT PLANS

F09000A
D400530
PLOTTED: 7/30/2019 1:08 AM FILE: C:\PWBatchPDF\Process\400530 - Morro Bay WRF\400530-00-E-503.dwg

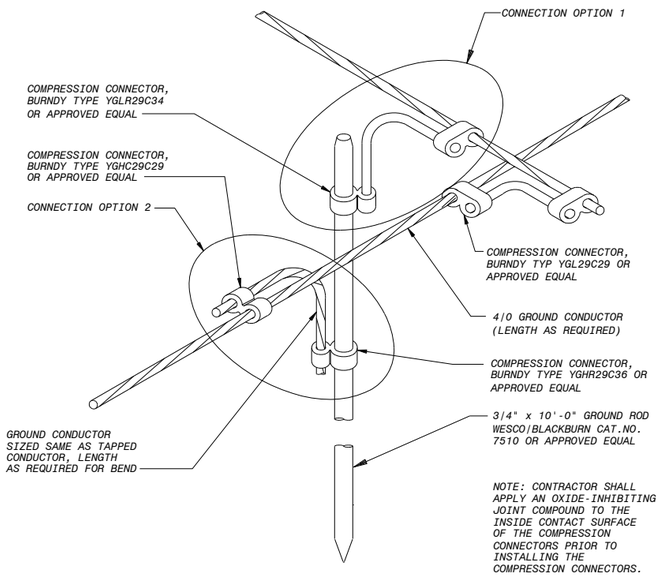


## TYPICAL COMPRESSION FITTING GROUND ROD TO CONNECTION AT CROSS OR TEE

(TWO CONNECTION OPTIONS SHOWN)
NO SCALE

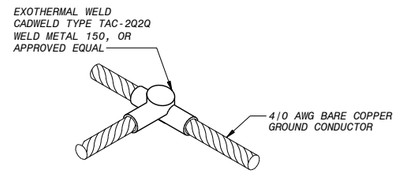


## TYPICAL EXOTHERMAL WELD TEE CONNECTION

NO SCALE

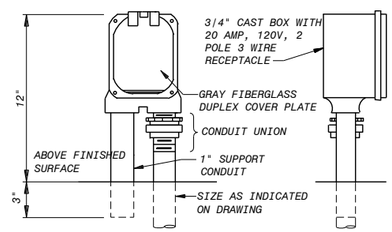


NOTE: ALL EXPOSED CONDUIT SHALL BE PVC COATED RIGID STEEL.

## TYPICAL WEATHERPROOF RECEPTACLE MOUNTING DETAIL

NO SCALE

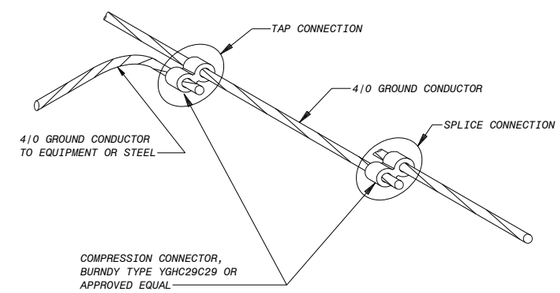


NOTE: CONTRACTOR SHALL APPLY AN OXIDE-INHIBITING JOINT COMPOUND TO THE INSIDE CONTACT SURFACE OF THE COMPRESSION CONNECTOR PRIOR TO INSTALLING THE COMPRESSION CONNECTOR.

## TYPICAL COMPRESSION FITTING TEE CONNECTION

NO SCALE

NOTE:

1. SEE DRAWINGS 00-E-001 AND 00-E-002 FOR ELECTRICAL LEGEND, ABBREVIATIONS AND NOTES.

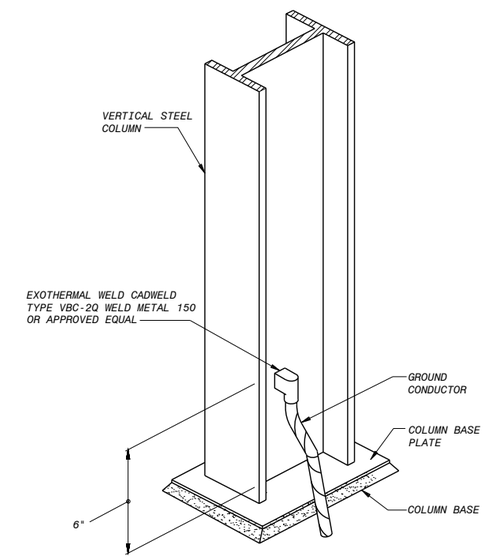


## TYPICAL EXOTHERMAL WELD STRUCTURE COLUMN GROUNDING

NO SCALE

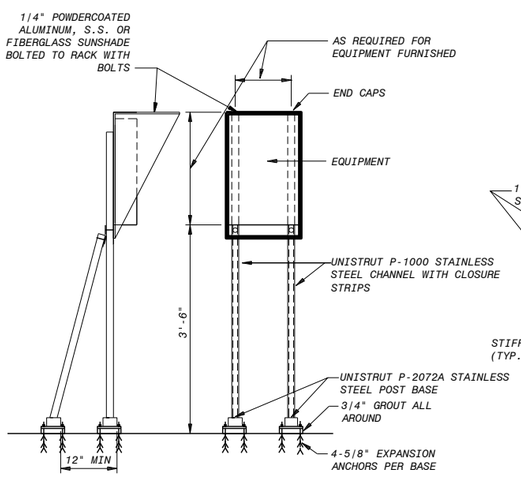


## TYPICAL EQUIPMENT MOUNTING DETAIL

NO SCALE

NOTE: IN OUTDOOR OR WET LOCATIONS, USE STAINLESS STEEL BOLTS, NUTS, WASHERS, ANCHOR BOLTS, AND SUNSHADE.

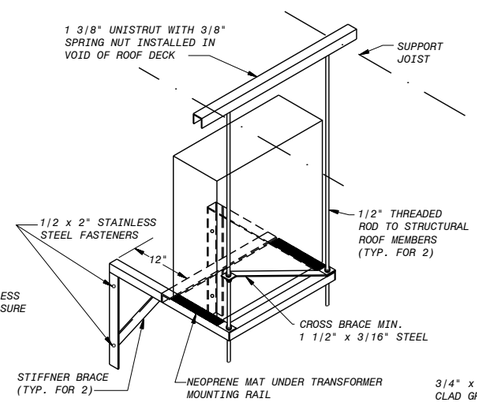


NOTES:

1. FRAME TO BE MINIMUM 2"x 2"x 1/4"
2. FULL WELD AT ALL JOINTS.
3. EPOXY ENAMEL PAINT ASSEMBLY PRIOR TO INSTALLATION

## TYPICAL WALL MOUNTED TRANSFORMER SUPPORT FOR UP TO 50KVA UNITS

NO SCALE

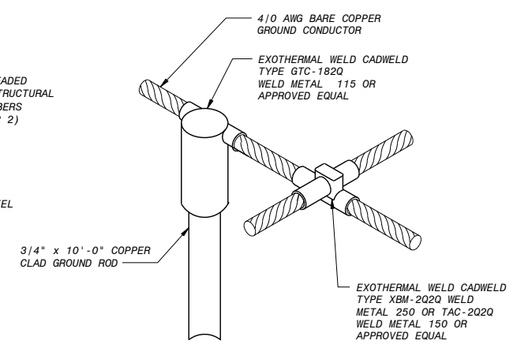


## TYPICAL EXOTHERMAL WELD GROUND ROD AT CROSS OR TEE CONNECTION

NO SCALE

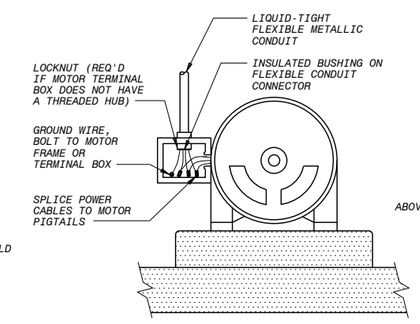


## CABLE TERMINATION AT MOTOR

NO SCALE

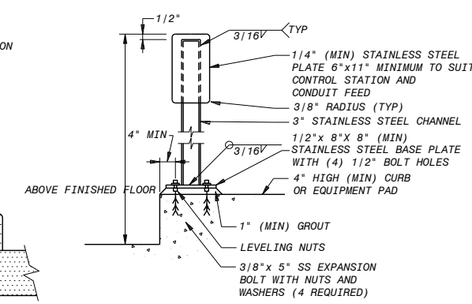


## TYPICAL CONTROL STATION MOUNTING DETAIL

NO SCALE

NOTE: IN OUTDOOR OR WET LOCATIONS, USE STAINLESS STEEL BOLTS, NUTS, WASHERS, ANCHOR BOLTS, AND SUNSHADE.

| NO. | BY | CHK | APP |
|---|---|---|---|
| B | JSL | MJK | EVB |

| DATE | REVISIONS AND RECORD OF USE |
|---|---|
| 7/30/2019 | 60% SUBMITTAL |

BLACK & VEATCH
JOINT VENTURE
FILANC
BLACK & VEATCH

CITY OF MORRO BAY
MORRO BAY WRF
RECLAMATION FACILITY (WRF)

GENERAL
ELECTRICAL
GROUNDING DETAILS

DESIGNED: JSL
DETAILED: SBC
CHECKED:
APPROVED:
DATE:

0 1/2 1
IF THIS BAR DOES NOT MEASURE 1" THEN DRAWING IS NOT TO FULL SCALE

PROJECT NO.
400530

00-E-504
SHEET
OF

COASTAL DEVELOPMENT PERMIT PLANS

F09000A
D400530
PLOTTED: 7/30/2019 1:09 AM FILE: C:\PWBatchPDF\Process\400530 - Morro Bay WRF\400530-00-E-504.dwg

## NOTES:

1. INCOMING PG&E POWER FEED TO BE DIRECT-BURIED, SCHEDULE 80 PVC.
2. THE SITE DUCT BANK WILL BE DIRECT-BURIED EXCEPT LOCATIONS WITH TRAFFIC WHICH WILL BE CONCRETE REINFORCED.
3. DUCT BANK LOCATED WITHIN ROADWAYS TO BE REINFORCED FOR TRAFFIC LOADING.
4. REMOVABLE AND FIXED BOLLARD PROTECTION ON OPEN SIDES OF PAD SHALL BE PROVIDED. A WORKING CLEARANCE SPACE OF 96" IN FRONT AND 36" CLEAR SPACE ON SIDES AND BACK OF THE TRANSFORMER SHALL BE PROVIDED.
5. SIGNAL AND COMMUNICATION DUCT BANK MANHOLE AND PULL BOXES SHALL BE SEPARATED FROM THE POWER RACEWAYS AS PER NEC REQUIREMENT.
6. FOR DIRECT BURIED DUCTS THE DEPTH OF LAYING FROM TOP OF SURFACE SHALL BE A MINIMUM OF 18".
7. FOR REINFORCED DUCT BANKS, THE DEPTH OF LAYING FROM TOP OF THE SURFACE SHALL BE 24".
8. REFER TO DRAWING NO. 10-E-601 AND 10-E-602 FOR DUCTBANK SCHEDULE.
9. THE DUCTBANK ROUTING IS INDICATIVE, ELECTRICAL SUBCONTRACTOR TO FINALIZE THE ROUTING POST AWARD OF CONTRACT.

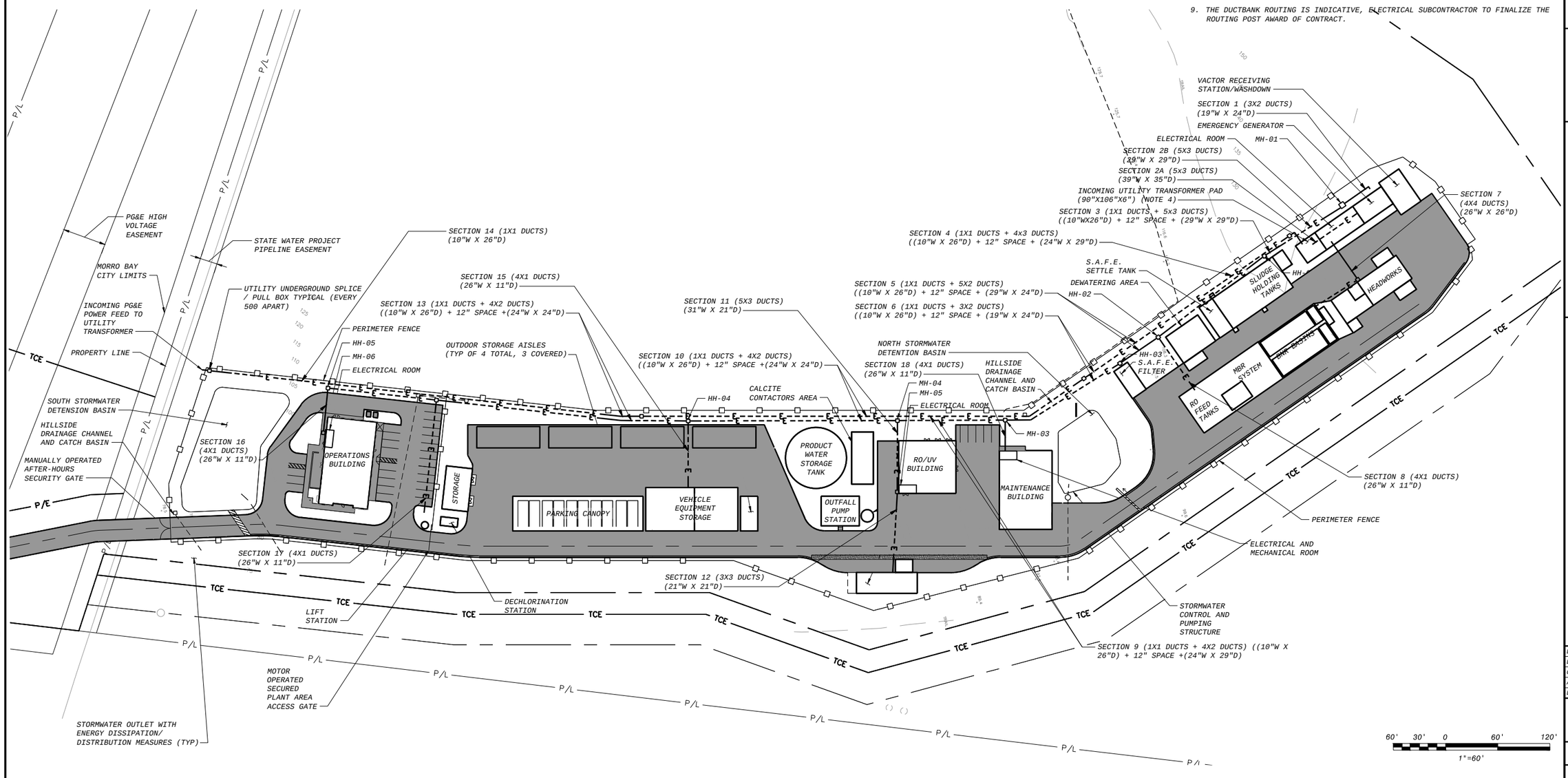


# COASTAL DEVELOPMENT PERMIT PLANS

| NO. | BY | CHK | APP |
|---|---|---|---|
| B | JSL | MJK | EVB |
| A | AM | MJK | EVB |

REVISIONS AND RECORD OF USE

| DATE | |
|---|---|
| 7/30/2019 | 60% SUBMITTAL |
| 3/5/2019 | 30% SUBMITTAL |

BLACK & VEATCH

JOINT VENTURE

FILANC

BLACK & VEATCH

CITY OF MORRO BAY
MORRO BAY WRF
RECLAMATION FACILITY (WRF)

SITE - OVERALL
ELECTRICAL
POWER PLAN

DESIGNED: JSL
DETAILED: SBC
CHECKED:
APPROVED:
DATE:

0 1/2 1
IF THIS BAR DOES NOT MEASURE 1" THEN DRAWING IS NOT TO FULL SCALE

PROJECT NO.
400530

10-E-100
SHEET
OF

F09000A
D400530
PLOTTED: 7/30/2019 4:10 PM FILE: C:\pw_working\bvw_americas\d0683625\400530-10-E-100.dwg

| NO. | LOCATION | FOOT CANDLE | FIXTURE TYPE |
|---|---|---|---|
| **INTERIOR LOCATION** | | | |
| A1 | RO/UV BUILDING | 30 | F1, F1E, F3, F3E, EXIT |
| A2 | WATER VEHICLES EQUIPMENT STORAGE | 15 | F1, F1E, F3, F3E, EXIT |
| A3 | ELECTRICAL BUILDING | 35 | F1, F1E, F3, F3E, EXIT |
| A4 | EMERGENCY POWER FACILITY | 35 | F1, F1E, F3, F3E, EXIT |
| A5 | CHEMICAL FACILITY | 30 | F2, F2E, F3, F3E, EXIT |
| A6 | OPERATIONS & CONTROL BUILDING | 30 | NOTE 2 |
| A7 | MAINTENANCE BUILDING | 50 | NOTE 3 |
| | | | |
| | **GENERAL INTERIOR LOCATION** | | |
| | OFFICE | 70 | |
| | WORKSHOP AREA | 75 | |
| | TOILETS/LOCKER ROOM/ LOBBY/CORRIDORS | 15 | |
| | LABORATORIES | 75 | |
| | LUNCH ROOM | 35 | |

| NO. | LOCATION | FOOT CANDLE | FIXTURE TYPE |
|---|---|---|---|
| **EXTERIOR LOCATION** | | | |
| B1 | WASH RACK | 5 | F3, F3E |
| B2 | WRF PARKING CANOPY | 1 | F1, F1E |
| B3 | COLLECTION VEHICLES EQUIPMENT STORAGE | 1 | F1, F1E |
| B4 | PLANT DRAIN/SEWER PUMP STATION | 30 | F1, F1E |
| B5 | HEADWORKS AREA | 5 | P1, P2, P3 |
| | HEADWORKS AREA - FINE SCREENS | 5 | |
| | HEADWORKS AREA - ODOR CONTROL SCREENS | 5 | |
| | HEADWORKS AREA - VACTOR WASHDOWN AREA | 5 | |
| B6 | TREATMENT AREA - BNR BASINS | 5 | P1, P2, P3 |
| | TREATMENT AREA - MBR SYSTEM | 5 | |
| | TREATMENT AREA - RO FEED TANKS | 5 | |
| | TREATMENT AREA - RECYCLED WATER PUMPS | 5 | |
| B7 | EFFLUENT AREA - CALCITE CONTACTOR AREA | 5 | P1, P2, P3 |
| | EFFLUENT AREA - IPR PRODUCT WATER STORAGE TANK | 5 | |
| | EFFLUENT AREA - PRODUCT WATER IPR PUMPS | 5 | |
| | EFFLUENT AREA - OUTFALL TANK AND PUMPS | 5 | |
| | EFFLUENT AREA - DISINFECTION SYSTEM | 5 | |
| B8 | RESIDUALS AREA - SLUDGE HOLDING TANKS & SAFE SETTL | 5 | P1, P2, P3 |
| | RESIDUALS AREA - DEWATERING FACILITY | 5 | |
| | RESIDUALS AREA - SAFE FILTER | 5 | |
| | | | |
| | **GENERAL EXTERIOR LOCATION** | | |
| | GENERAL SITE AREA | 1 | |
| | WALKWAY | 5 | |
| | SECURITY FENCE | 0.5 | |
| | VEHICLE GATE | 5 | |
| | ROADWAY | 0.5 | |
| | MAIN BUILDING ENTRANCES | 5 | |
| | SIDE BUILDING ENTRANCES | 1 | |
| | PROCESS AREA | 5 | |
| | PARKING AREA | 1 | |

**LIGHTING FIXTURE SCHEDULE**

| FIXTURE | LAMP | DESCRIPTION | TYPE OF MOUNTING |
|---|---|---|---|
| F1 | LED<br>53 WATT<br>5955 LUMENS 4000K | 53 WATTS SUSPENDED MOUNTED LED FIXTURE | PENDANT MOUNT |
| F1E | LED<br>53 WATT<br>5955 LUMENS 4000K | 53 WATTS SUSPENDED MOUNTED LED FIXTURE WITH EMERGENCY BATTERY | PENDANT MOUNT |
| F2 | LED<br>53 WATT<br>5955 LUMENS 4000K | 53 WATTS SUSPENDED MOUNTED VAPOR TIGHT LED FIXTURE | SUSPENDED/PENDANT MOUNT<br>VAPOR TIGHT |
| F2E | LED<br>53 WATT<br>5955 LUMENS 4000K | 53 WATTS SUSPENDED MOUNTED VAPOR TIGHT LED FIXTURE WITH EMERGENCY BATTERY | SUSPENDED/PENDANT MOUNT<br>VAPOR TIGHT |
| F3 | LED<br>25 WATT<br>3201 LUMENS 4000K | 25 WATT LED FIXTURE 3201 LUMENS 4000K WALL MOUNTED | WALL MOUNTED, 10' ABOVE GRADE |
| F3E | LED<br>25 WATT<br>3201 LUMENS 4000K | 25 WATT LED FIXTURE 3201 LUMENS 4000K WALL MOUNTED WITH EMERGENCY BATTERY | WALL MOUNTED, 10' ABOVE GRADE |
| P1 | LED<br>52 WATT<br>5862 LUMENS 4000K | 52 WATTS, POLE MOUNTED LED FIXTURE, OUTDOOR USE, PHOTO CELL CONTROLLED | 10' POLE MOUNTED , PHOTO CELL CONTROLLED |
| P2 | LED<br>52 WATT<br>5862 LUMENS 4000K | 52 WATTS, STANCHION MOUNTED LED FIXTURE, OUTDOOR USE, PHOTO CELL CONTROLLED | STANCHION MOUNTED 10' ABOVE PLATFORM PHOTO CELL CONTROLLED |
| P3 | LED<br>140 WATT<br>19677 LUMENS 4000K | 140 WATT LED FLOOD LIGHT, POLE MOUNTED, OUTDOOR USE, PHOTO CELL CONTROLLED | FLOODLIGHT POLE MOUNTED 10', PHOTO CELL CONTROL |
| EXIT | LED LAMPS FURNISHED WITH UNIT | INDUSTRIAL EMERGENCY EXIT SIGN, NI-CAD BATTERY | EXIT DOORS, WALL MOUNTED 1' ABOVE DOOR |

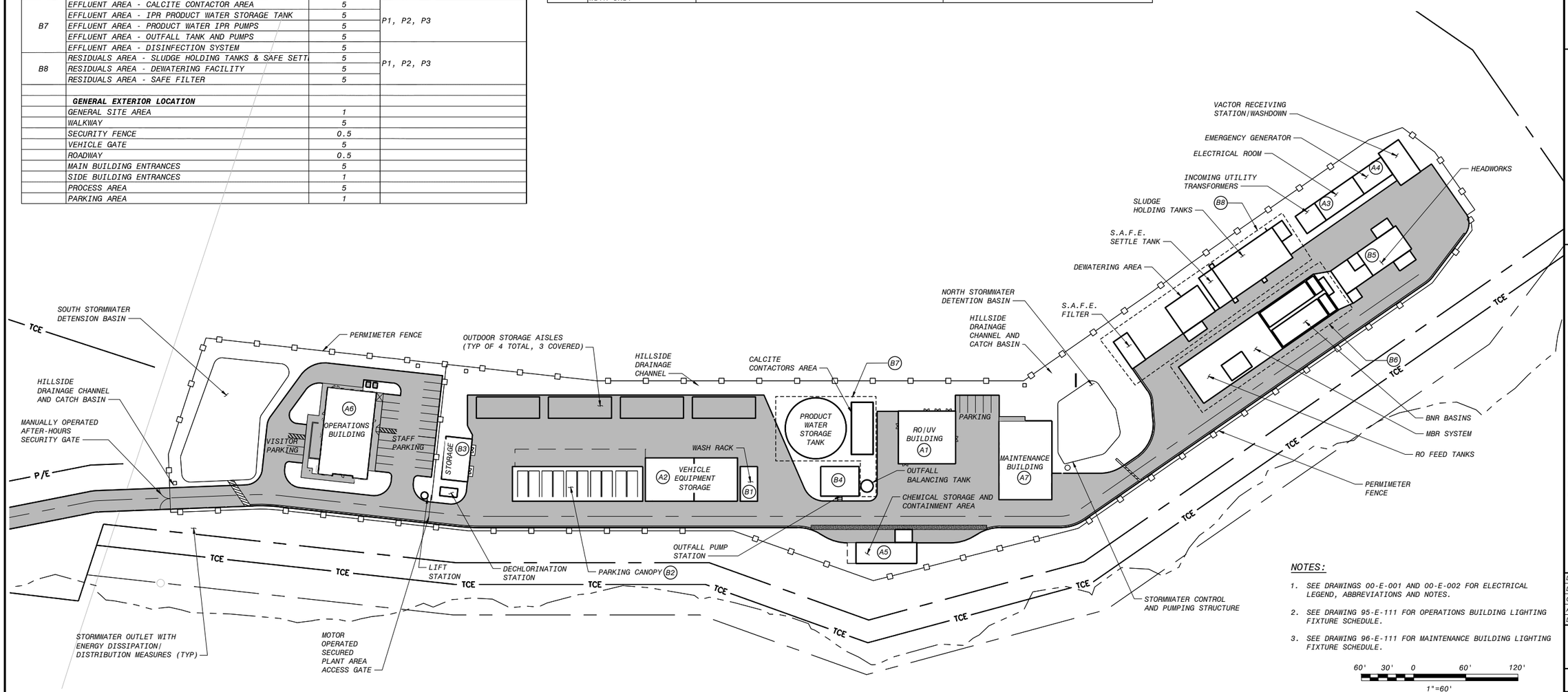


NOTES:

1. SEE DRAWINGS 00-E-001 AND 00-E-002 FOR ELECTRICAL LEGEND, ABBREVIATIONS AND NOTES.
2. SEE DRAWING 95-E-111 FOR OPERATIONS BUILDING LIGHTING FIXTURE SCHEDULE.
3. SEE DRAWING 96-E-111 FOR MAINTENANCE BUILDING LIGHTING FIXTURE SCHEDULE.

60' 30' 0 60' 120'
1"=60'

# COASTAL DEVELOPMENT PERMIT PLANS

| NO. | BY | CHK | APP |
|---|---|---|---|
| B | JSL | MJK | EVB |

REVISIONS AND RECORD OF USE

DATE: 7/30/2019 60% SUBMITTAL

BLACK & VEATCH

JOINT VENTURE

FILANC

CITY OF MORRO BAY
MORRO BAY WRF
RECLAMATION FACILITY (WRF)

SITE - OVERALL
ELECTRICAL
LIGHTING PLAN

DESIGNED: JSL
DETAILED: SBC
CHECKED:
APPROVED:
DATE:

0 1/2 1
IF THIS BAR DOES NOT MEASURE 1" THEN DRAWING IS NOT TO FULL SCALE

PROJECT NO.
400530

10-E-111
SHEET
OF

F09000A
D400530
PLOTTED: 7/29/2019 11:05 PM FILE: C:\PWBatchPDF\Process\400530 - Morro Bay WRF\400530-10-E-111.dwg

| FROM | TO | CABLE SIZE | No of Conduits | Size of conduits as per load list | No of Conduits - Power | Size of conduits listed as per standard size | No of Conduits - Control | Size of Control Conduits | No of Conduits - Signal | Size of Signal Conduits | Used Conduits (Power+ Control+Signal) | Spare Conduits | Total Conduits | Section Number | Bottom Depth | Conduit Size | Layers of Conduit | Gap between the conduits | Top Cover Depth | Total Depth (inch) | Side width | Conduit Size | Layers of Conduit | Gap between the conduits | Total Width | Concrete Encased | Top Burial Depth |
|---|---|---|---|---|---|---|---|---|---|---|---|---|---|---|---|---|---|---|---|---|---|---|---|---|---|---|---|
| GEN | ATS | 9-350KCMIL,3#1/0N,(3)2-1/2" | 3 | 2.5 | 3 | 3 | 2 | 3 | 2 | 3 | 5 | 1 | 6 | Section 1 | 4 | 3 | 2 | 2 | 12 | 24 | 3 | 3 | 3 | 2 | 19 | No | 18 |
| TRAFO | ATS | 24-500KCMIL,8#4/0N,(8)3" | 14 | 5 | 14 | 5 | 0 | 3 | 0 | 3 | 14 | 1 | 15 | Section 2A | 4 | 5 | 3 | 2 | 12 | 35 | 3 | 5 | 5 | 2 | 39 | No | 18 |
| SWB | 50-MCC | 15-500KCMIL,5#4/0G,(5)3" | 5 | 3 | 5 | 3 | | | | | 7 | | | | | | | | | | | | | | | | |
| 80-ELEC-MCC-0001 | Solids - Rotary lobe sludge holding tank Blower #1 | 3#6,#10G,1" | 1 | 1 | | | | | | | | | | | | | | | | | | | | | | | |
| 80-ELEC-MCC-0001 | Solids - Rotary lobe sludge holding tank Blower #2 | 3#6,#10G,1" | 1 | 1 | 1 | 3 | | | | | 1 | | | | | | | | | | | | | | | | |
| 80-ELEC-MCC-0001 | Solids - Sludge Holding Tank Mixer #1 | 3#12,#12G,3/4" | 1 | 1 | | | | | | | | | | | | | | | | | | | | | | | |
| 80-ELEC-MCC-0001 | Solids - Sludge Holding Tank Mixer #2 | 3#12,#12G,3/4" | 1 | 1 | | | | | | | | | | | | | | | | | | | | | | | |
| 80-ELEC-MCC-0001 | Solids - Dewatering Sludge Feed Pumps | 3#12,#12G,3/4" | 1 | 1 | | | | | | | | | | | | | | | | | | | | | | | |
| 80-ELEC-MCC-0001 | Solids - Belt Filter Press<br>Dewatering Sludge Belt Press, Solids dewatering angled conveyor, Belt Press Transfer Conveyor, Solids dewatering horizontal conveyor | 3#8,#10G,3/4" | 1 | 1 | 1 | 3 | | | | | 1 | | | | | | | | | | | | | | | | |
| 80-ELEC-MCC-0001 | Lighting Transformer (80-ELEC-LT-0001) for Headworks Area (LP (80-ELEC-LP-0001) and 120V Power Panel (80-ELEC-PP-0001) | 3#1/0,#8G,1-1/2" | 1 | 1 | | | 1 | 3 | 1 | 3 | | 4 | 15 | Section 2B | 4 | 3 | 3 | 2 | 12 | 29 | 3 | 3 | 5 | 2 | 29 | No | 18 |
| 80-ELEC-MCC-0001 | Power Panel for Headworks Area (kVA rating assumed) (80-ELEC-PP-0002) | 3#1/0,#8G,1-1/2" | 1 | 1 | 1 | 3 | | | | | 1 | | | | | | | | | | | | | | | | |
| 80-ELEC-MCC-0001 | HVAC (kW rating assumed) | 3#2,#8G,1-1/4" | 1 | 1 | | | | | | | | | | | | | | | | | | | | | | | |
| 80-ELEC-MCC-0001 | Influent - Disc Filter<br>SAFE Filter, SAFE Filter Backwash Pump, SAFE Filter Solid Waste Pump | 3#2,#8G,1-1/4" | 1 | 1 | 1 | 3 | | | | | 1 | | | | | | | | | | | | | | | | |
| 80-ELEC-MCC-0002 | RO Feed Tanks - Recycled Water Pump #1 | 3#12,#12G,3/4" | 1 | 1 | | | | | | | | | | | | | | | | | | | | | | | |
| 80-ELEC-MCC-0002 | RO Feed Tanks - Recycled Water Pump #2 | 3#12,#12G,3/4" | 1 | 1 | | | | | | | | | | | | | | | | | | | | | | | |
| MV Cables | Trafo | | | | 1 | 4 | | | | | 1 | | 1 | | 4 | 4 | 1 | 3 | 18 | 26 | 3 | 4 | 1 | 2 | 10 | No | 18 |
| SWB | 50-MCC | 15-500KCMIL,5#4/0G,(5)3" | 5 | 3 | 5 | 3 | | | | | 7 | | | | | | | | | | | | | | | | |
| 80-ELEC-MCC-0001 | Solids - Rotary lobe sludge holding tank Blower #1 | 3#6,#10G,1" | 1 | 1 | | | | | | | | | | | | | | | | | | | | | | | |
| 80-ELEC-MCC-0001 | Solids - Rotary lobe sludge holding tank Blower #2 | 3#6,#10G,1" | 1 | 1 | 1 | 3 | | | | | 1 | | | | | | | | | | | | | | | | |
| 80-ELEC-MCC-0001 | Solids - Sludge Holding Tank Mixer #1 | 3#12,#12G,3/4" | 1 | 1 | | | | | | | | | | | | | | | | | | | | | | | |
| 80-ELEC-MCC-0001 | Solids - Sludge Holding Tank Mixer #2 | 3#12,#12G,3/4" | 1 | 1 | | | | | | | | | | | | | | | | | | | | | | | |
| 80-ELEC-MCC-0001 | Solids - Dewatering Sludge Feed Pumps | 3#12,#12G,3/4" | 1 | 1 | | | | | | | | | | | | | | | | | | | | | | | |
| 80-ELEC-MCC-0001 | Solids - Belt Filter Press<br>Dewatering Sludge Belt Press, Solids dewatering angled conveyor, Belt Press Transfer Conveyor, Solids dewatering horizontal conveyor | 3#8,#10G,3/4" | 1 | 1 | 1 | 3 | | | | | 1 | | | | | | | | | | | | | | | | |
| 80-ELEC-MCC-0001 | Lighting Transformer (80-ELEC-LT-0001) for Headworks Area (LP (80-ELEC-LP-0001) and 120V Power Panel (80-ELEC-PP-0001) | 3#1/0,#8G,1-1/2" | 1 | 1 | | | 1 | 3 | 1 | 3 | | 4 | 15 | Section 3 | 4 | 3 | 3 | 2 | 12 | 29 | 3 | 3 | 5 | 2 | 29 | No | 18 |
| 80-ELEC-MCC-0001 | Power Panel for Headworks Area (kVA rating assumed) (80-ELEC-PP-0002) | 3#1/0,#8G,1-1/2" | 1 | 1 | 1 | 3 | | | | | 1 | | | | | | | | | | | | | | | | |
| 80-ELEC-MCC-0001 | HVAC (kW rating assumed) | 3#2,#8G,1-1/4" | 1 | 1 | | | | | | | | | | | | | | | | | | | | | | | |
| 80-ELEC-MCC-0001 | Influent - Disc Filter<br>SAFE Filter, SAFE Filter Backwash Pump, SAFE Filter Solid Waste Pump | 3#2,#8G,1-1/4" | 1 | 1 | 1 | 3 | | | | | 1 | | | | | | | | | | | | | | | | |
| 80-ELEC-MCC-0002 | RO Feed Tanks - Recycled Water Pump #1 | 3#12,#12G,3/4" | 1 | 1 | | | | | | | | | | | | | | | | | | | | | | | |
| 80-ELEC-MCC-0002 | RO Feed Tanks - Recycled Water Pump #2 | 3#12,#12G,3/4" | 1 | 1 | | | | | | | | | | | | | | | | | | | | | | | |
| MV Cables | Trafo | | | | 1 | 4 | | | | | 1 | | 1 | | 4 | 4 | 1 | 3 | 18 | 26 | 3 | 4 | 1 | 2 | 10 | No | 18 |
| 80-ELEC-MCC-0001 | Solids - Dewatering Sludge Feed Pumps | 3#12,#12G,3/4" | 1 | 1 | | | | | | | | | | | | | | | | | | | | | | | |
| 80-ELEC-MCC-0001 | Solids - Belt Filter Press<br>Dewatering Sludge Belt Press, Solids dewatering angled conveyor, Belt Press Transfer Conveyor, Solids dewatering horizontal conveyor | 3#8,#10G,3/4" | 1 | 1 | 1 | 3 | | | | | 3 | | | | | | | | | | | | | | | | |
| 80-ELEC-MCC-0001 | Lighting Transformer (80-ELEC-LT-0001) for Headworks Area (LP (80-ELEC-LP-0001) and 120V Power Panel (80-ELEC-PP-0001) | 3#1/0,#8G,1-1/2" | 1 | 1 | | | | | | | | | | | | | | | | | | | | | | | |
| 80-ELEC-MCC-0001 | Power Panel for Headworks Area (kVA rating assumed) (80-ELEC-PP-0002) | 3#1/0,#8G,1-1/2" | 1 | 1 | | | 1 | 3 | 1 | 3 | | 2 | 12 | Section 4 | 4 | 3 | 3 | 2 | 12 | 29 | 3 | 3 | 4 | 2 | 24 | No | 18 |
| 80-ELEC-MCC-0001 | HVAC (kW rating assumed) | 3#2,#8G,1-1/4" | 1 | 1 | 1 | 3 | | | | | 1 | | | | | | | | | | | | | | | | |
| 80-ELEC-MCC-0001 | Influent - Disc Filter<br>SAFE Filter, SAFE Filter Backwash Pump, SAFE Filter Solid Waste Pump | 3#2,#8G,1-1/4" | 1 | 1 | | | | | | | | | | | | | | | | | | | | | | | |
| 80-ELEC-MCC-0002 | RO Feed Tanks - Recycled Water Pump #1 | 3#12,#12G,3/4" | 1 | 1 | 1 | 3 | | | | | 1 | | | | | | | | | | | | | | | | |
| 80-ELEC-MCC-0002 | RO Feed Tanks - Recycled Water Pump #2 | 3#12,#12G,3/4" | 1 | 1 | | | | | | | | | | | | | | | | | | | | | | | |
| SWB | 50-MCC | 15-500KCMIL,5#4/0G,(5)3" | 5 | 3 | 5 | 3 | | | | | 5 | | | | | | | | | | | | | | | | |
| MV Cables | Trafo | | | | 1 | 4 | | | | | 1 | | 1 | | 4 | 4 | 1 | 3 | 18 | 26 | 3 | 4 | 1 | 2 | 10 | No | 18 |
| 80-ELEC-MCC-0001 | Lighting Transformer (80-ELEC-LT-0001) for Headworks Area (LP (80-ELEC-LP-0001) and 120V Power Panel (80-ELEC-PP-0001) | 3#1/0,#8G,1-1/2" | 1 | 1 | 1 | 3 | | | | | 2 | | | | | | | | | | | | | | | | |
| 80-ELEC-MCC-0001 | Power Panel for Headworks Area (kVA rating assumed) (80-ELEC-PP-0002) | 3#1/0,#8G,1-1/2" | 1 | 1 | | | | | | | | | | | | | | | | | | | | | | | |
| 80-ELEC-MCC-0001 | HVAC (kW rating assumed) | 3#2,#8G,1-1/4" | 1 | 1 | | | 1 | 3 | 1 | 3 | | 2 | 10 | Section 5 | 4 | 3 | 2 | 2 | 12 | 24 | 3 | 3 | 5 | 2 | 29 | No | 18 |
| 80-ELEC-MCC-0001 | Influent - Disc Filter<br>SAFE Filter, SAFE Filter Backwash Pump, SAFE Filter Solid Waste Pump | 3#2,#8G,1-1/4" | 1 | 1 | 1 | 3 | | | | | 1 | | | | | | | | | | | | | | | | |
| SWB | 50-MCC | 15-500KCMIL,5#4/0G,(5)3" | 5 | 3 | 5 | 3 | | | | | 5 | | | | | | | | | | | | | | | | |
| MV Cables | Trafo | | | | 1 | 4 | | | | | 1 | | 1 | | 4 | 4 | 1 | 3 | 18 | 26 | 3 | 4 | 1 | 2 | 10 | No | 18 |
| SWB | 50-MCC | 15-500KCMIL,5#4/0G,(5)3" | 5 | 3 | 5 | 3 | 1 | 3 | 1 | 3 | 6 | 0 | 6 | Section 6 | 4 | 3 | 2 | 2 | 12 | 24 | 3 | 3 | 3 | 2 | 19 | No | 18 |

## SITE OVERALL DUCTBANK DETAILS

NO SCALE

NOTES:

1. SEE DRAWINGS 00-E-001 AND 00-E-002 FOR ELECTRICAL LEGEND, ABBREVIATIONS AND NOTES.

# COASTAL DEVELOPMENT PERMIT PLANS

| NO. | BY | CHK | APD |
|---|---|---|---|
| B | JSL | MJK | EVB |

REVISIONS AND RECORD OF USE

| DATE | |
|---|---|
| 7/30/2019 | 60% SUBMITTAL |

BLACK & VEATCH
JOINT VENTURE
FILANC
BLACK & VEATCH

CITY OF MORRO BAY
MORRO BAY WRF
RECLAMATION FACILITY (WRF)

SITE - OVERALL
ELECTRICAL
DUCTBANK DETAILS

DESIGNED: JSL
DETAILED: SBC
CHECKED:
APPROVED:
DATE:

0 1/2 1
IF THIS BAR DOES NOT MEASURE 1" THEN DRAWING IS NOT TO FULL SCALE

PROJECT NO.
400530

10-E-601
SHEET
1 OF 2

F09000A
D400530
PLOTTED: 7/29/2019 11:05 PM FILE: C:\PWBatchPDF\Process\400530 - Morro Bay WRF\400530-10-E-601.dwg

| FROM | TO | CABLE SIZE | No of Conduits | Size of conduits as per load list | No of Conduits - Power | Size of conduits listed as per standard size | No of Conduits - Control | Size of Control Conduits | No of Conduits - Signal | Size of Signal Conduits | Used Conduits (Power+ Control+Signal) | Spare Conduits | Total Conduits | Section Number | Bottom Depth | Conduit Size | Layers of Conduit | Gap between the conduits | Top Cover Depth | Total Depth (inch) | Side width | Conduit Size | Layers of Conduit | Gap between the conduits | Total Width | Concrete Encased | Top Burial Depth |
|---|---|---|---|---|---|---|---|---|---|---|---|---|---|---|---|---|---|---|---|---|---|---|---|---|---|---|---|
| 80-ELEC-MCC-0001 | Headworks - Headworks Package #1 | 3#8,#10G,3/4" | 1 | 1 | | | | | | | | | | | | | | | | | | | | | | | |
| 80-ELEC-MCC-0001 | Headworks - Headworks Package #2 | 3#8,#10G,3/4" | 1 | 1 | 1 | 3 | | | | | 4 | | | | | | | | | | | | | | | | |
| 80-ELEC-MCC-0001 | Headworks - Odor Control System LCP | 3#12,#12G,3/4" | 1 | 1 | | | | | | | | | | | | | | | | | | | | | | | |
| 80-ELEC-MCC-0001 | Headworks - Fine Screen Package #1 | 3#12,#12G,3/4" | 1 | 1 | | | | | | | | | | | | | | | | | | | | | | | |
| 80-ELEC-MCC-0001 | Headworks - Fine Screen Package #2 | 3#12,#12G,3/4" | 1 | 1 | 1 | 3 | | | | | 1 | | | | | | | | | | | | | | | | |
| 80-ELEC-MCC-0001 | Headworks - Fine Screen Screw Conveyor and Discharge Chute | 3#12,#12G,3/4" | 1 | 1 | | | | | | | | | | | | | | | | | | | | | | | |
| 80-ELEC-MCC-0002 | MBR - Anoxic Mixer #1 | 3#12,#12G,3/4" | 1 | 1 | | | | | | | | | | | | | | | | | | | | | | | |
| 80-ELEC-MCC-0002 | MBR - Anoxic Mixer #2 | 3#12,#12G,3/4" | 1 | 1 | 1 | 3 | | | | | 1 | | | | | | | | | | | | | | | | |
| 80-ELEC-MCC-0002 | MBR - RAS Deox Mixer | 3#12,#12G,3/4" | 1 | 1 | | | | | | | | | | | | | | | | | | | | | | | |
| 80-ELEC-MCC-0002 | MBR - Filtrate Pump #1 | 3#2,#8G,1-1/4" | 1 | 1 | | | | | | | | | | | | | | | | | | | | | | | |
| 80-ELEC-MCC-0002 | MBR - Filtrate Pump #2 | 3#2,#8G,1-1/4" | 1 | 1 | 1 | 3 | | | | | 1 | | | | | | | | | | | | | | | | |
| 80-ELEC-MCC-0002 | MBR - BNR Aeration Blower #1 | 3#2/0,#6G,2" | 1 | 2 | | | | | | | | | | | | | | | | | | | | | | | |
| 80-ELEC-MCC-0002 | MBR - BNR Aeration Blower #2 | 3#2/0,#6G,2" | 1 | 2 | 1 | 3 | | | | | 1 | | | | | | | | | | | | | | | | |
| 80-ELEC-MCC-0002 | MBR - BNR Aeration Blower #3 | 3#2/0,#6G,2" | 1 | 2 | | | 2 | 3 | 1 | 3 | | 3 | 16 | Section 7 | 4 | 3 | 4 | 2 | 4 | 26 | 4 | 3 | 4 | 2 | 26 | Yes | 24 |
| 80-ELEC-MCC-0002 | MBR - Rotary Lobe Membrane Sour Blower #1 LCP | 3#2,#8G,1-1/4" | 1 | 1 | | | | | | | | | | | | | | | | | | | | | | | |
| 80-ELEC-MCC-0002 | MBR - Rotary Lobe Membrane Sour Blower #2 LCP | 3#2,#8G,1-1/4" | 1 | 1 | 1 | 3 | | | | | 1 | | | | | | | | | | | | | | | | |
| 80-ELEC-MCC-0002 | MBR - Drain Pump | 3#12,#12G,3/4" | 1 | 1 | | | | | | | | | | | | | | | | | | | | | | | |
| 80-ELEC-MCC-0002 | BNR - WAS Pump | 3#12,#12G,3/4" | 1 | 1 | | | | | | | | | | | | | | | | | | | | | | | |
| 80-ELEC-MCC-0002 | BNR - Scum Pump | 3#12,#12G,3/4" | 1 | 1 | 1 | 3 | | | | | 1 | | | | | | | | | | | | | | | | |
| 80-ELEC-MCC-0002 | MBR - Feed Pump #1 | 3#8,#10G,3/4" | 1 | 1 | | | | | | | | | | | | | | | | | | | | | | | |
| 80-ELEC-MCC-0002 | MBR - Feed Pump #2 | 3#8,#10G,3/4" | 1 | 1 | | | | | | | | | | | | | | | | | | | | | | | |
| 80-ELEC-MCC-0002 | RO Feed Tanks - Recycled Water Pump #1 | 3#12,#12G,3/4" | 1 | 1 | 1 | 3 | | | | | 1 | | | | | | | | | | | | | | | | |
| 80-ELEC-MCC-0002 | RO Feed Tanks - Recycled Water Pump #2 | 3#12,#12G,3/4" | 1 | 1 | | | | | | | | | | | | | | | | | | | | | | | |
| 80-ELEC-MCC-0002 | Lighting Transformer (80-ELEC-LT-0002) for MBR Area (LP (80-ELEC-LP-0002) and 120V Power Panel (80-ELEC-PP-0003) | 3#1/0,#8G,1-1/2" | 1 | 2 | 1 | 3 | | | | | 1 | | | | | | | | | | | | | | | | |
| 80-ELEC-MCC-0002 | Power Panel for MBR Area (kVA rating assumed) (80-ELEC-PP-0004) | 3#1/0,#8G,1-1/2" | 1 | 2 | 1 | 3 | | | | | 1 | | | | | | | | | | | | | | | | |
| 80-ELEC-MCC-0002 | HVAC (kW rating assumed) | 3#2,#8G,1-1/4" | 1 | 1 | | | | | | | | | | | | | | | | | | | | | | | |
| 80-ELEC-MCC-0002 | RO Feed Tanks - Recycled Water Pump #1 | 3#12,#12G,3/4" | 1 | 1 | 1 | 3 | 1 | 3 | 1 | 3 | 3 | 1 | 4 | Section 8 | 4 | 3 | 1 | 2 | 4 | 11 | 4 | 3 | 4 | 2 | 26 | Yes | 24 |
| 80-ELEC-MCC-0002 | RO Feed Tanks - Recycled Water Pump #2 | 3#12,#12G,3/4" | 1 | 1 | | | | | | | | | | | | | | | | | | | | | | | |
| MV Cables | Trafo | | | | 1 | 4 | | | | | 1 | | 1 | | 4 | 4 | 1 | 3 | 18 | 26 | 3 | 4 | 1 | 2 | 10 | No | 18 |
| SWB | 50-MCC | 15-500KCMIL,5#4/0G,(5)3" | 5 | 3 | 5 | 3 | 1 | 3 | 1 | 3 | 7 | 3 | 12 | Section 9 | 4 | 3 | 3 | 2 | 12 | 29 | 3 | 3 | 4 | 2 | 24 | No | 18 |
| 50-ELEC-MCC-0001 | Maintainence Bldg | | 2 | 3 | 2 | 3 | | | | | 2 | | | | | | | | | | | | | | | | |
| MV Cables | Trafo | | | | 1 | 4 | | | | | 1 | | 1 | | 4 | 4 | 1 | 3 | 18 | 26 | 3 | 4 | 1 | 2 | 10 | No | 18 |
| 50-ELEC-MCC-0001 | Product Water - IPR Pump #1 | 3#12,#12G,3/4" | 1 | 1 | | | | | | | | | | | | | | | | | | | | | | | |
| 50-ELEC-MCC-0001 | Product Water - IPR Pump #2 | 3#12,#12G,3/4" | 1 | 1 | 1 | 3 | | | | | 2 | | | | | | | | | | | | | | | | |
| 50-ELEC-MCC-0001 | Product Water - IPR Pump #3 | 3#12,#12G,3/4" | 1 | 1 | | | | | | | | | | | | | | | | | | | | | | | |
| 50-ELEC-MCC-0001 | Lighting Transformer (50-ELEC-LT-0001) for RO Area (LP (50-ELEC-LP-0001) and 120V Power Panel (50-ELEC-PP-0001) | 3#1/0,#8G,1-1/2" | 1 | 2 | 1 | 3 | 1 | 3 | 1 | 3 | 1 | 2 | 8 | Section 10 | 4 | 3 | 2 | 2 | 12 | 24 | 3 | 3 | 4 | 2 | 24 | No | 18 |
| 50-ELEC-MCC-0001 | Power Panel for RO Area (kVA rating assumed) (50-ELEC-PP-0002) | 3#1/0,#8G,1-1/2" | 1 | 2 | 1 | 3 | | | | | 1 | | | | | | | | | | | | | | | | |
| 50-ELEC-MCC-0001 | Operations Building HVAC | 3#1/0,#8G,1-1/2" | 1 | 2 | 1 | 3 | | | | | 1 | | | | | | | | | | | | | | | | |
| 50-ELEC-MCC-0001 | Maintenance Building HVAC | 3#4,#10G,1-1/4" | 1 | 2 | 1 | 3 | | | | | 1 | | | | | | | | | | | | | | | | |
| SWB | 50-MCC | 15-500KCMIL,5#4/0G,(5)3" | 5 | 3 | 5 | 3 | | | | | 6 | | | | | | | | | | | | | | | | |
| 50-ELEC-MCC-0001 | Product Water - IPR Pump #1 | 3#12,#12G,3/4" | 1 | 1 | | | | | | | | | | | | | | | | | | | | | | | |
| 50-ELEC-MCC-0001 | Product Water - IPR Pump #2 | 3#12,#12G,3/4" | 1 | 1 | 1 | 3 | | | | | 1 | | | | | | | | | | | | | | | | |
| 50-ELEC-MCC-0001 | Product Water - IPR Pump #3 | 3#12,#12G,3/4" | 1 | 1 | | | | | | | | | | | | | | | | | | | | | | | |
| 50-ELEC-MCC-0001 | Lighting Transformer (50-ELEC-LT-0001) for RO Area (LP (50-ELEC-LP-0001) and 120V Power Panel (50-ELEC-PP-0001) | 3#1/0,#8G,1-1/2" | 1 | 2 | 1 | 3 | 1 | 3 | 1 | 3 | 1 | 4 | 15 | Section 11 | 4 | 3 | 3 | 2 | 4 | 21 | 4 | 3 | 5 | 2 | 31 | Yes | 24 |
| 50-ELEC-MCC-0001 | Power Panel for RO Area (kVA rating assumed) (50-ELEC-PP-0002) | 3#1/0,#8G,1-1/2" | 1 | 2 | 1 | 3 | | | | | 1 | | | | | | | | | | | | | | | | |
| 50-ELEC-MCC-0001 | Operations Building HVAC | 3#1/0,#8G,1-1/2" | 1 | 2 | 1 | 3 | | | | | 1 | | | | | | | | | | | | | | | | |
| 50-ELEC-MCC-0001 | Maintenance Building HVAC | 3#4,#10G,1-1/4" | 1 | 2 | 1 | 3 | | | | | 1 | | | | | | | | | | | | | | | | |
| 50-ELEC-MCC-0001 | Product Water - Outfall Pump #1 | 3#2/0,#6G,2" | 1 | 2 | 1 | 3 | | | | | 2 | | | | | | | | | | | | | | | | |
| 50-ELEC-MCC-0001 | Product Water - Outfall Pump #2 | 3#2/0,#6G,2" | 1 | 2 | 1 | 3 | | | | | 1 | | | | | | | | | | | | | | | | |
| 50-ELEC-MCC-0001 | Product Water - Outfall Pump #3 | 3#2/0,#6G,2" | 1 | 2 | 1 | 3 | 1 | 3 | 1 | 3 | 1 | 2 | 9 | Section 12 | 4 | 3 | 3 | 2 | 4 | 21 | 4 | 3 | 3 | 2 | 21 | Yes | 24 |
| 50-ELEC-MCC-0001 | Product Water - Outfall Pump #4 | 3#2/0,#6G,2" | 1 | 2 | 1 | 3 | | | | | 1 | | | | | | | | | | | | | | | | |
| 50-ELEC-MCC-0001 | Chemical Dosing Area | | 2 | 3 | 2 | 3 | | | | | 2 | | | | | | | | | | | | | | | | |
| MV Cables | Trafo | | | | 1 | 4 | | | | | 1 | | 1 | | 4 | 4 | 1 | 3 | 18 | 26 | 3 | 4 | 1 | 2 | 10 | No | 18 |
| 50-ELEC-MCC-0001 | Lighting Transformer (50-ELEC-LT-0001) for RO Area (LP (50-ELEC-LP-0001) and 120V Power Panel (50-ELEC-PP-0001) | 3#1/0,#8G,1-1/2" | 1 | 2 | 1 | 3 | 1 | 3 | 1 | 3 | 3 | 1 | 4 | Section 13 | 4 | 3 | 2 | 2 | 12 | 24 | 3 | 3 | 4 | 2 | 24 | No | 18 |
| 50-ELEC-MCC-0001 | Power Panel for RO Area (kVA rating assumed) (50-ELEC-PP-0002) | 3#1/0,#8G,1-1/2" | 1 | 2 | | 3 | | | | | 0 | | | | | | | | | | | | | | | | |
| 50-ELEC-MCC-0001 | Operations Building HVAC | 3#1/0,#8G,1-1/2" | 1 | 2 | | 3 | | | | | 0 | | | | | | | | | | | | | | | | |
| MV Cables | Trafo | | | | 1 | 4 | | | | | 1 | | 1 | Section 14 | 4 | 4 | 1 | 3 | 18 | 26 | 3 | 4 | 1 | 2 | 10 | No | 18 |
| 50-ELEC-MCC-0001 | Lighting Transformer (50-ELEC-LT-0001) for RO Area (LP (50-ELEC-LP-0001) and 120V Power Panel (50-ELEC-PP-0001) | 3#1/0,#8G,1-1/2" | 1 | 2 | 1 | 3 | 1 | 3 | 1 | 3 | 3 | 1 | 4 | Section 15 | 4 | 3 | 1 | 2 | 4 | 11 | 4 | 3 | 4 | 2 | 26 | Yes | 24 |
| 50-ELEC-MCC-0001 | Power Panel for RO Area (kVA rating assumed) (50-ELEC-PP-0002) | 3#1/0,#8G,1-1/2" | 1 | 2 | | 3 | | | | | 0 | | | | | | | | | | | | | | | | |
| 50-ELEC-MCC-0001 | Lighting Transformer (50-ELEC-LT-0001) for RO Area (LP (50-ELEC-LP-0001) and 120V Power Panel (50-ELEC-PP-0001) | 3#1/0,#8G,1-1/2" | 1 | 2 | 1 | 3 | 1 | 3 | 1 | 3 | 3 | 1 | 4 | Section 16 | 4 | 3 | 1 | 2 | 4 | 11 | 4 | 3 | 4 | 2 | 26 | Yes | 24 |
| 50-ELEC-MCC-0001 | Power Panel for RO Area (kVA rating assumed) (50-ELEC-PP-0002) | 3#1/0,#8G,1-1/2" | 1 | 2 | | 3 | | | | | 0 | | | | | | | | | | | | | | | | |
| 50-ELEC-MCC-0001 | Lighting Transformer (50-ELEC-LT-0001) for RO Area (LP (50-ELEC-LP-0001) and 120V Power Panel (50-ELEC-PP-0001) | 3#1/0,#8G,1-1/2" | 1 | 2 | 1 | 3 | 1 | 3 | 1 | 3 | 3 | 1 | 4 | Section 17 | 4 | 3 | 1 | 2 | 4 | 11 | 4 | 3 | 4 | 2 | 26 | Yes | 24 |
| 50-ELEC-MCC-0001 | Power Panel for RO Area (kVA rating assumed) (50-ELEC-PP-0002) | 3#1/0,#8G,1-1/2" | 1 | 2 | | 3 | | | | | 0 | | | | | | | | | | | | | | | | |
| 50-ELEC-MCC-0001 | Lighting Transformer (50-ELEC-LT-0001) for RO Area (LP (50-ELEC-LP-0001) and 120V Power Panel (50-ELEC-PP-0001) | 3#1/0,#8G,1-1/2" | 1 | 2 | 1 | 3 | 1 | 3 | 1 | 3 | 3 | 1 | 4 | Section 18 | 4 | 3 | 1 | 2 | 4 | 11 | 4 | 3 | 4 | 2 | 26 | Yes | 24 |
| 50-ELEC-MCC-0001 | Power Panel for RO Area (kVA rating assumed) (50-ELEC-PP-0002) | 3#1/0,#8G,1-1/2" | 1 | 2 | | 3 | | | | | 0 | | | | | | | | | | | | | | | | |

SITE OVERALL DUCTBANK DETAILS

NO SCALE

**NOTES:**

1. SEE DRAWINGS 00-E-001 AND 00-E-002 FOR ELECTRICAL LEGEND, ABBREVIATIONS AND NOTES

COASTAL DEVELOPMENT PERMIT PLANS

| NO. | BY | CHK | APP |
|---|---|---|---|
| B | JSL | MJK | EVB |

REVISIONS AND RECORD OF USE

| DATE | |
|---|---|
| 7/30/2019 | 60% SUBMITTAL |

BLACK & VEATCH JOINT VENTURE

FILANC BLACK & VEATCH

CITY OF MORRO BAY
MORRO BAY WRF
RECLAMATION FACILITY (WRF)

SITE - OVERALL ELECTRICAL DUCTBANK DETAILS

DESIGNED: JSL
DETAILED: SBC
CHECKED:
APPROVED:
DATE:

0 1/2 1
IF THIS BAR DOES NOT MEASURE 1" THEN DRAWING IS NOT TO FULL SCALE

PROJECT NO. 400530

10-E-602
SHEET 2 OF 2

PLOTTED: 7/29/2019 11:06 PM FILE: C:\PWBatchPDF\Process\400530 - Morro Bay WRF\400530-10-E-602.dwg
F09000A
D400530

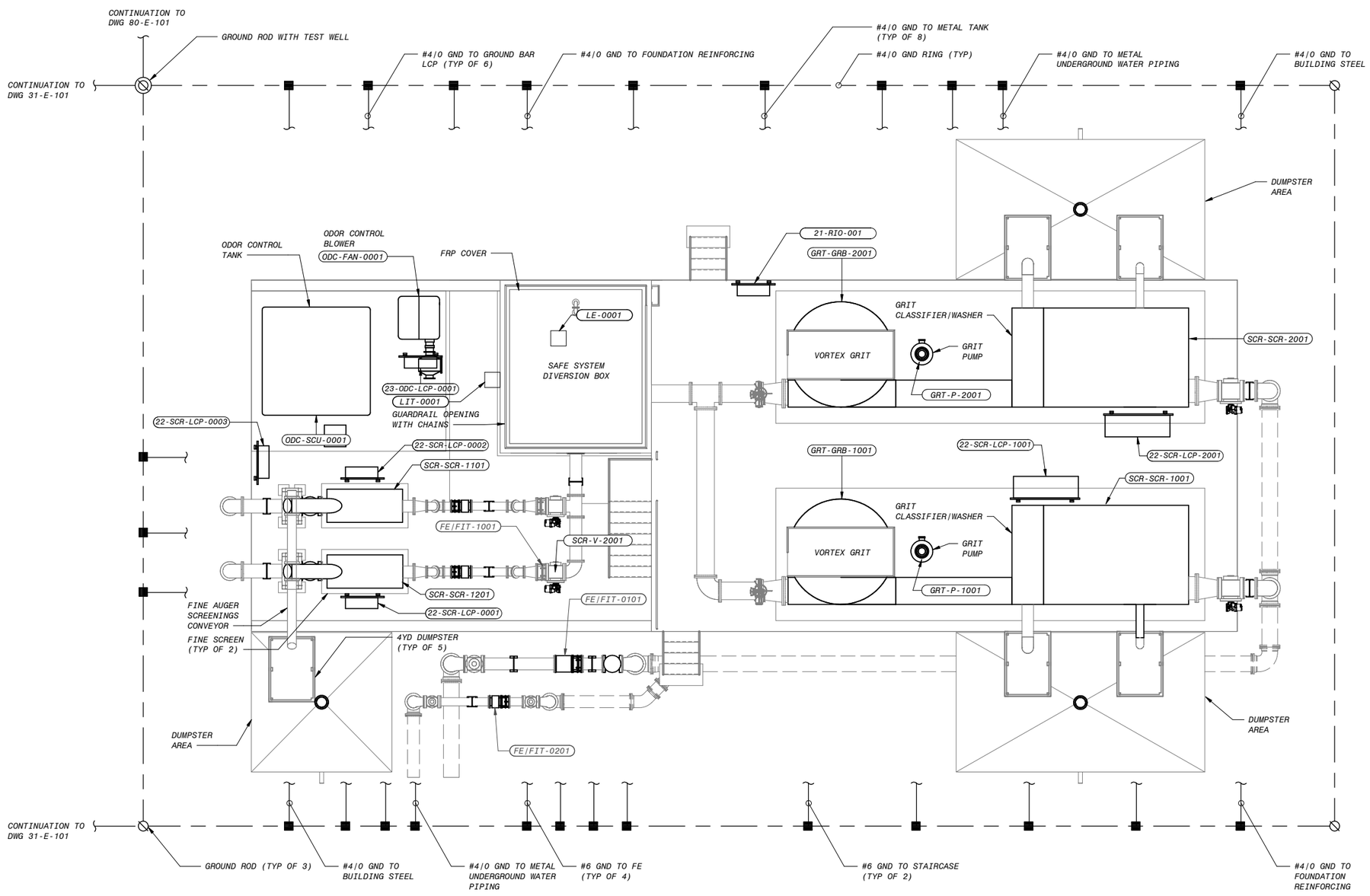


HEADWORKS AREA POWER AND GROUNDING PLAN

3/16" = 1'-0"

NOTES:

1. SEE DRAWING 00-E-001 AND 00-E-002 FOR ELECTRICAL LEGENDS, ABBREVIATIONS AND NOTES.
2. SEE DRAWING 10-E-100 FOR OVERALL ELECTRICAL SITE PLAN.

| DATE | REVISIONS AND RECORD OF USE | NO. | BY | CHK | APP |
|---|---|---|---|---|---|
| 7/30/2019 | 60% SUBMITTAL | B | JSL | MJK | EVB |

BLACK & VEATCH

JOINT VENTURE

FILANC

BLACK & VEATCH

CITY OF MORRO BAY
MORRO BAY WATER
RECLAMATION FACILITY (WRF)

HEADWORKS AREA
ELECTRICAL
POWER AND GROUNDING PLAN

DESIGNED: JSL
DETAILED: SBC
CHECKED:
APPROVED:
DATE:

0 1/2 1
IF THIS BAR DOES NOT MEASURE 1" THEN DRAWING IS NOT TO FULL SCALE

PROJECT NO.
400530

21-E-101
SHEET
OF

6" 4' 2' 0' 5' 10'
3/16" = 1'-0"

COASTAL DEVELOPMENT PERMIT PLANS

PLOTTED: 30-07-2019 16:13:02
D400530

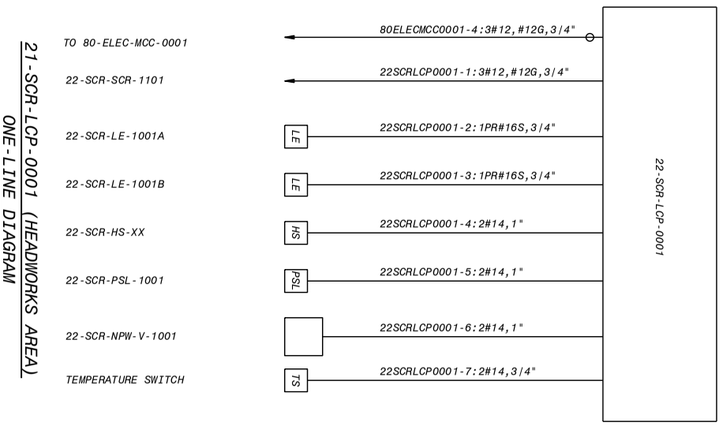


21-SCR-LCP-0001 (HEADWORKS AREA)
ONE-LINE DIAGRAM
NO SCALE

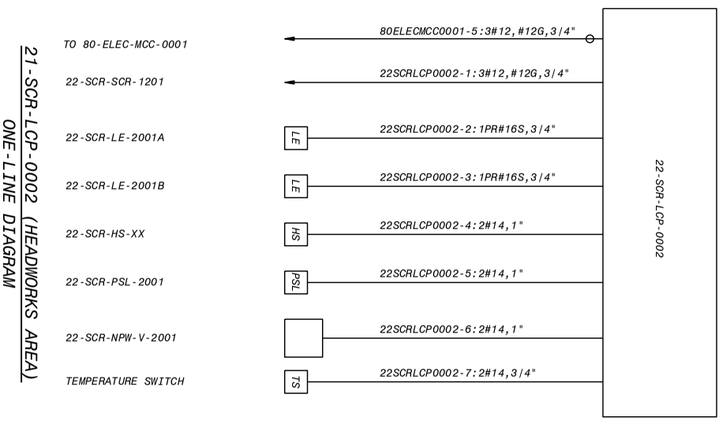


21-SCR-LCP-0002 (HEADWORKS AREA)
ONE-LINE DIAGRAM
NO SCALE

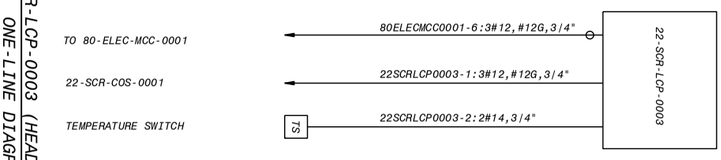


21-SCR-LCP-0003 (HEADWORKS AREA)
ONE-LINE DIAGRAM
NO SCALE

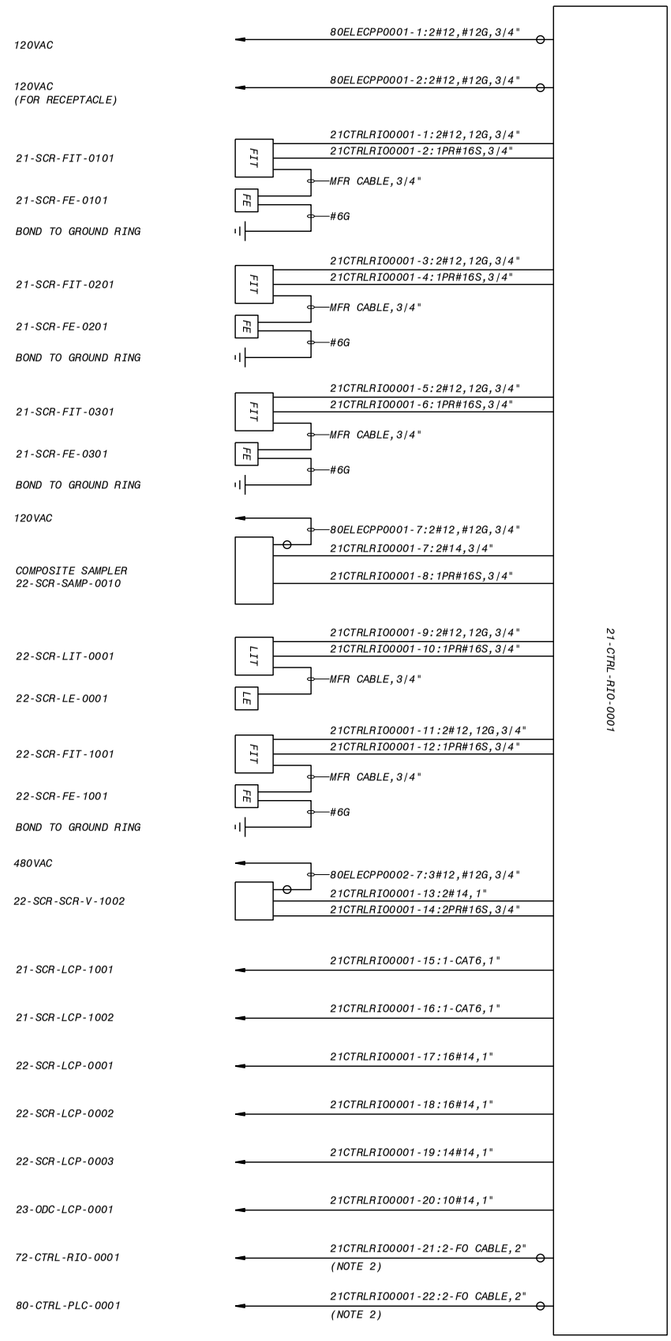


21-CTRL-RIO-0001 (HEADWORKS AREA)
ONE-LINE DIAGRAM
NO SCALE

COASTAL DEVELOPMENT PERMIT PLANS

NOTES:

1. SEE DRAWINGS 00-E-001 AND 00-E-002 FOR ELECTRICAL LEGEND, ABBREVIATIONS AND NOTES.
2. SEE DRAWING 00-I-701 FOR FIBRE OPTIC CABLE REQUIREMENTS.

DESIGNED: JSL
DETAILED: SBC
CHECKED:
APPROVED:
DATE:

0 1/2 1
IF THIS BAR DOES NOT MEASURE 1" THEN DRAWING IS NOT FULL SCALE

PROJECT NO. 400530

21-E-711
SHEET
OF

CITY OF MORRO BAY
MORRO BAY WRF
RECLAMATION FACILITY (WRF)

HEADWORKS AREA
ELECTRICAL
21-CTRL-RIO-0001 ONE-LINE DIAGRAM

BLACK & VEATCH
JOINT VENTURE
FILANC
BLACK & VEATCH

| DATE | REVISIONS AND RECORD OF USE | NO. | BY | CHK | APR |
|---|---|---|---|---|---|
| 7/30/2019 | 60% SUBMITTAL | B | JSL | MJK | EVB |

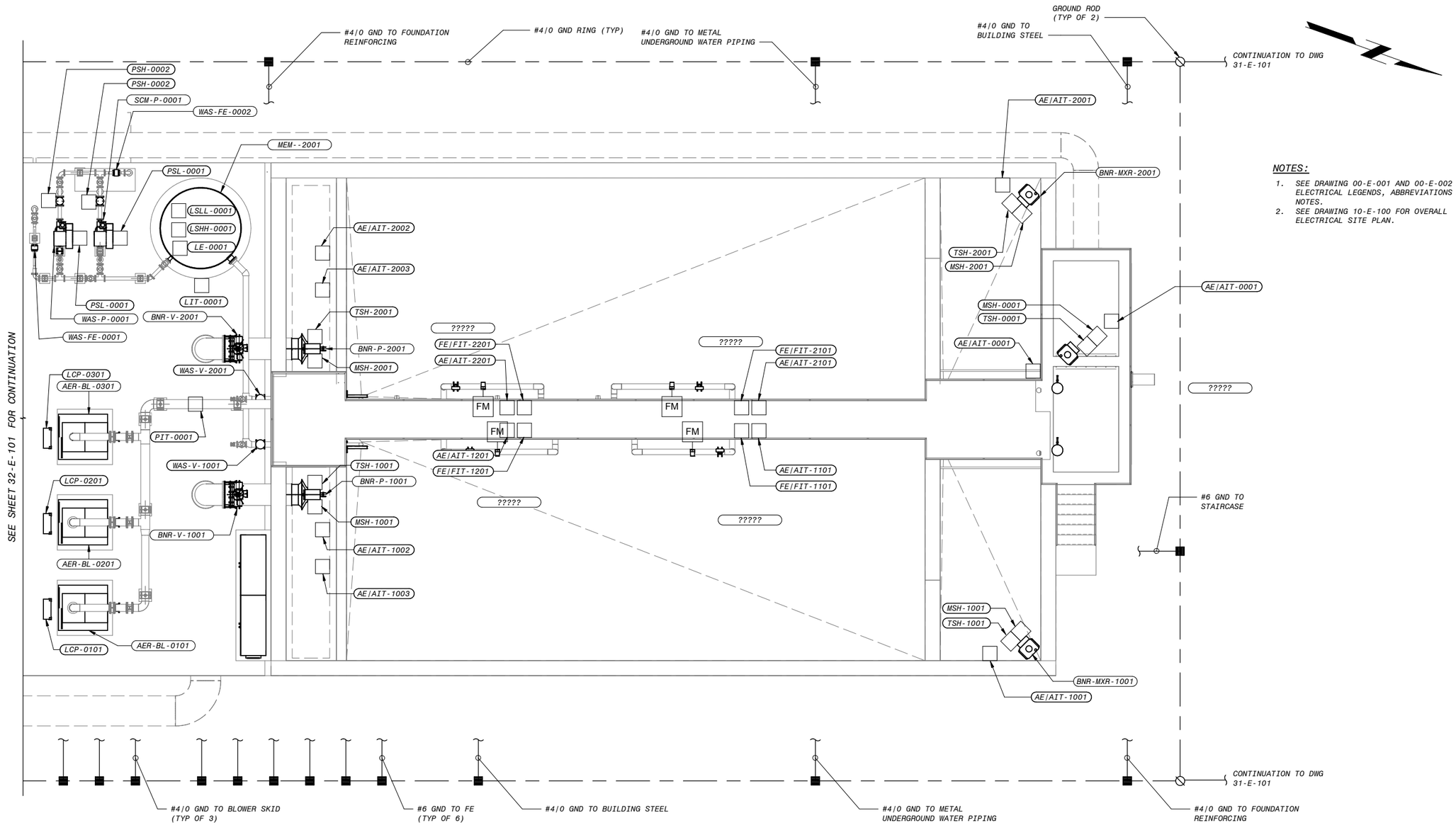


## NOTES:

1. SEE DRAWING 00-E-001 AND 00-E-002 FOR ELECTRICAL LEGENDS, ABBREVIATIONS AND NOTES.
2. SEE DRAWING 10-E-100 FOR OVERALL ELECTRICAL SITE PLAN.

## TREATMENT AREA - BNR BASIN POWER AND GROUNDING PLAN

3/16" = 1'-0"

6" 4' 2' 0' 5' 10'

3/16" = 1'-0"

# COASTAL DEVELOPMENT PERMIT PLANS

| NO. | BY | CHK | APP | REVISIONS AND RECORD OF USE | DATE |
|---|---|---|---|---|---|
| B | JSL | MJK | EVB | 60% SUBMITTAL | 7/30/2019 |

BLACK & VEATCH

JOINT VENTURE

FILANC

BLACK & VEATCH

CITY OF MORRO BAY
MORRO BAY WATER
RECLAMATION FACILITY (WRF)

TREATMENT AREA - BNR BASIN
ELECTRICAL
POWER AND GROUNDING PLAN

DESIGNED: JSL
DETAILED: SBC
CHECKED:
APPROVED:
DATE:

0 1/2 1

IF THIS BAR DOES NOT MEASURE 1" THEN DRAWING IS NOT TO FULL SCALE

PROJECT NO.
400530

31-E-101
SHEET
OF

PLOTTED: 30-07-2019 16:25:55

D400530

NOTES:

1. SEE DRAWINGS 00-E-001 AND 00-E-002 FOR ELECTRICAL LEGEND, ABBREVIATIONS AND NOTES.

COASTAL DEVELOPMENT PERMIT PLANS

| NO. | BY | CHK | APP |
|---|---|---|---|
| B | JSL | MJK | EVB |

| DATE | REVISIONS AND RECORD OF USE |
|---|---|
| 7/30/2019 | 60% SUBMITTAL |

BLACK & VEATCH

JOINT VENTURE

FILANC

BLACK & VEATCH

CITY OF MORRO BAY
MORRO BAY WRF
RECLAMATION FACILITY (WRF)

TREATMENT AREA
ELECTRICAL
31-CTRL-RIO-0001 ONE-LINE DIAGRAM

DESIGNED: JSL
DETAILED: SBC
CHECKED:
APPROVED:
DATE:

0 1/2 1
IF THIS BAR DOES NOT MEASURE 1" THEN DRAWING IS NOT TO FULL SCALE

PROJECT NO. 400530

31-E-711
SHEET 1 OF 2

FD9000A
D400530
PLOTTED: 7/30/2019 7:18 PM FILE: C:\pw_working\pw_americas\d0683637\400530-31-E-711.dwg

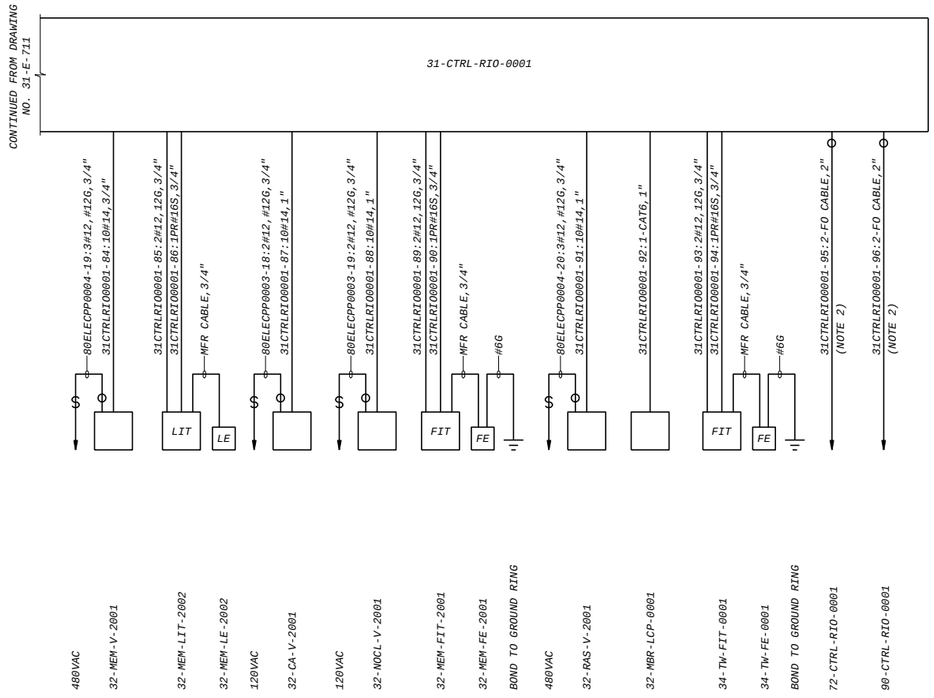


## 31-CTRL-RIO-0001 (TREATMENT AREA)
## ONE-LINE DIAGRAM
NO SCALE

**NOTES:**

1. SEE DRAWINGS 00-E-001 AND 00-E-002 FOR ELECTRICAL LEGEND, ABBREVIATIONS AND NOTES.
2. SEE DRAWING 00-T-701 FOR FIBRE OPTIC CABLE REQUIREMENT.

COASTAL DEVELOPMENT PERMIT PLANS

| DATE | REVISIONS AND RECORD OF USE | NO. | BY | CHK | APP |
|---|---|---|---|---|---|
| 7/30/2019 | 60% SUBMITTAL | B | JSL | MJK | EVB |

BLACK & VEATCH
JOINT VENTURE
FILANC
BLACK & VEATCH

CITY OF MORRO BAY
MORRO BAY WRF
RECLAMATION FACILITY (WRF)

TREATMENT AREA
ELECTRICAL
31-CTRL-RIO-0001 ONE-LINE DIAGRAM

DESIGNED: JSL
DETAILED: SBC
CHECKED:
APPROVED:
DATE:

0 1/2 1
IF THIS BAR DOES NOT MEASURE 1" THEN DRAWING IS NOT TO FULL SCALE

PROJECT NO.
400530

31-E-712
SHEET
2 OF 2

F09000A
0400530
PLOTTED: 7/30/2019 7:47 PM FILE: C:\pw_working\bvw_americas\d0683637\400530-31-E-712.dwg

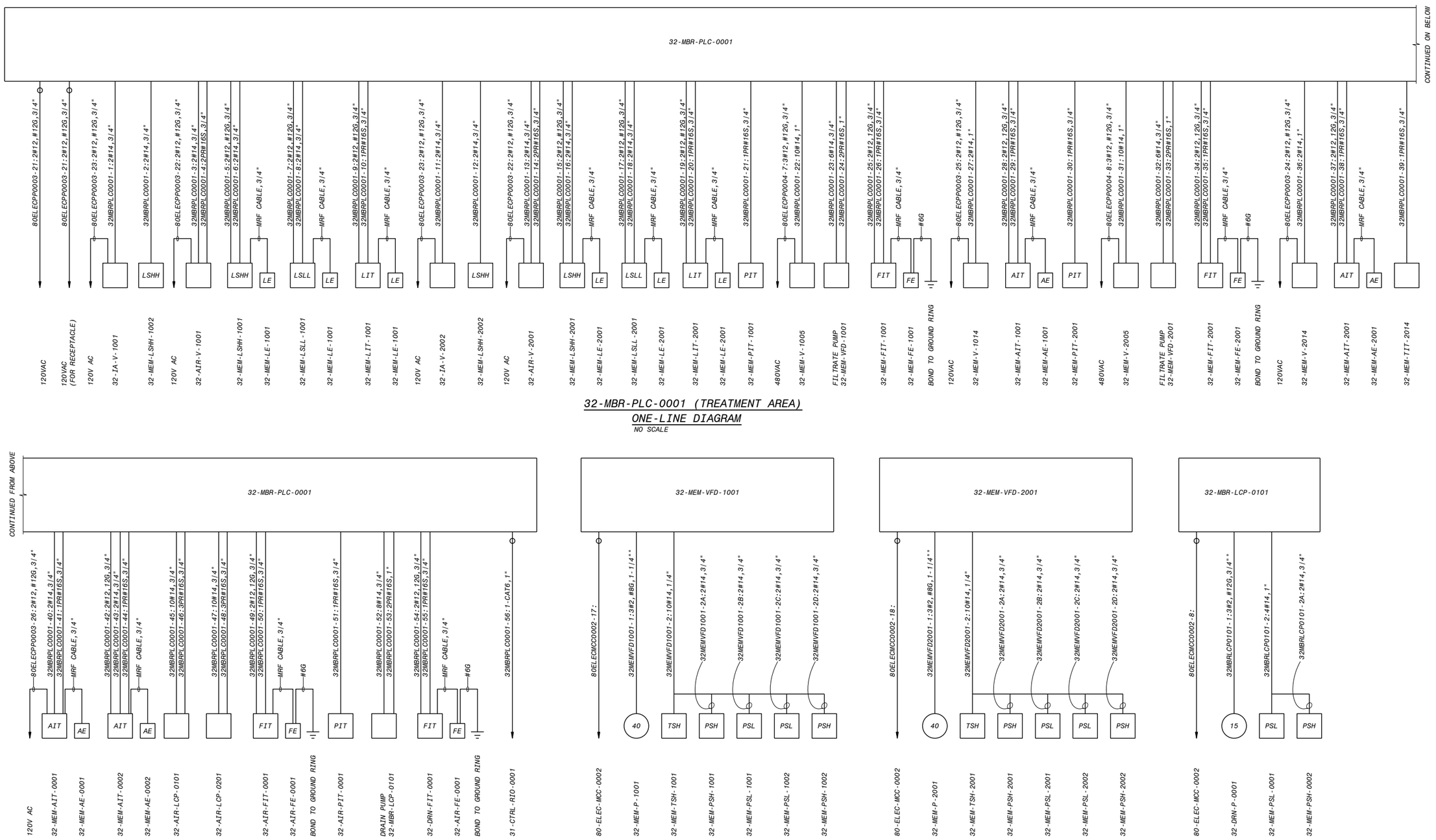


32-MBR-PLC-0001 (TREATMENT AREA)
ONE-LINE DIAGRAM
NO SCALE




32-MBR-PLC-0001 (TREATMENT AREA)
ONE-LINE DIAGRAM
NO SCALE




32-MEM-VFD-1001 (TREATMENT AREA)
ONE-LINE DIAGRAM
NO SCALE




32-MEM-VFD-2001 (TREATMENT AREA)
ONE-LINE DIAGRAM
NO SCALE




32-MBR-LCP-0101 (TREATMENT AREA)
ONE-LINE DIAGRAM
NO SCALE

NOTES:

1. SEE DRAWINGS 00-E-001 AND 00-E-002 FOR ELECTRICAL LEGEND, ABBREVIATIONS AND NOTES.

COASTAL DEVELOPMENT PERMIT PLANS

| DATE | REVISIONS AND RECORD OF USE | NO. | BY | CHK | APP |
|---|---|---|---|---|---|
| 7/30/2019 | 60% SUBMITTAL | B | JSL | MJK | EVB |

BLACK & VEATCH
JOINT VENTURE
FILANC
BLACK & VEATCH

CITY OF MORRO BAY
MORRO BAY WRF
RECLAMATION FACILITY (WRF)

TREATMENT AREA
ELECTRICAL
32-MBR-PLC-0001 ONE-LINE DIAGRAM

DESIGNED: JSL
DETAILED: SBC
CHECKED:
APPROVED:
DATE:

0 1/2 1
IF THIS BAR DOES NOT MEASURE 1" THEN DRAWING IS NOT TO FULL SCALE

PROJECT NO.
400530

31-E-713
SHEET
OF

F09000A
D400530
PLOTTED: 7/29/2019 11:07 PM FILE: C:\PWBatchPDF\Process\400530 - Morro Bay WRF\400530-31-E-713.dwg

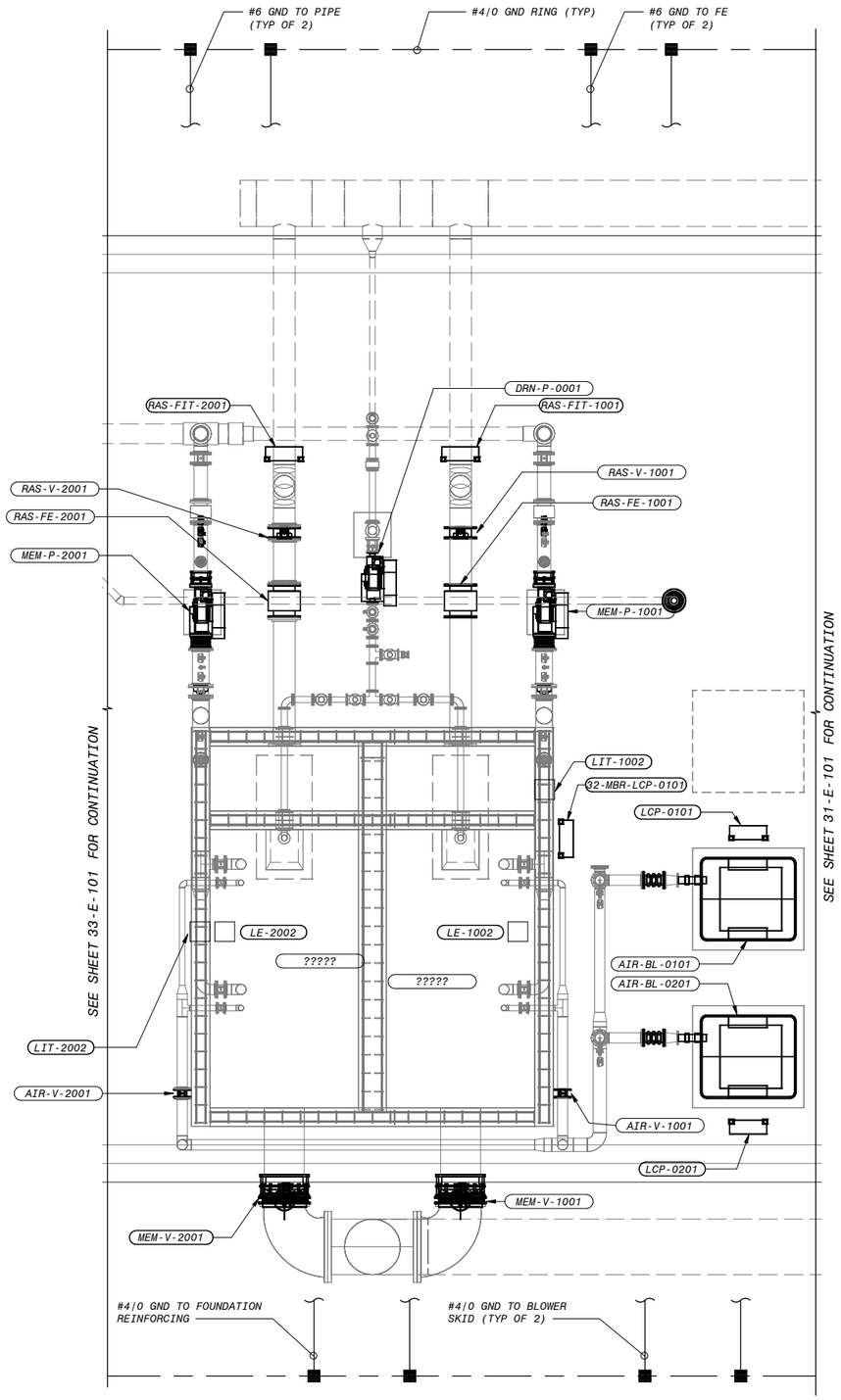


TREATMENT AREA - MBR SYSTEM POWER AND GROUNDING PLAN

1/4" = 1'-0"

NOTES:

1. SEE DRAWING 00-E-001 AND 00-E-002 FOR ELECTRICAL LEGENDS, ABBREVIATIONS AND NOTES.
2. SEE DRAWING 10-E-100 FOR OVERALL ELECTRICAL SITE PLAN.

4' 2' 0' 4' 8'

1/4" = 1'-0"

COASTAL DEVELOPMENT PERMIT PLANS

| NO. | BY | CHK | APP |
|---|---|---|---|
| B | JSL | MJK | EVB |

| DATE | REVISIONS AND RECORD OF USE |
|---|---|
| 7/30/2019 | 60% SUBMITTAL |

BLACK & VEATCH

JOINT VENTURE

FILANC

BLACK & VEATCH

CITY OF MORRO BAY
MORRO BAY WATER
RECLAMATION FACILITY (WRF)

TREATMENT AREA - MBR SYSTEM
ELECTRICAL
POWER AND GROUNDING PLAN

DESIGNED: JSL
DETAILED: SBC
CHECKED:
APPROVED:
DATE:

0 1/2 1

IF THIS BAR DOES NOT MEASURE 1" THEN DRAWING IS NOT TO FULL SCALE

PROJECT NO.
400530

32-E-101
SHEET
OF

PLOTTED: 30-07-2019 16:25:56

D400530

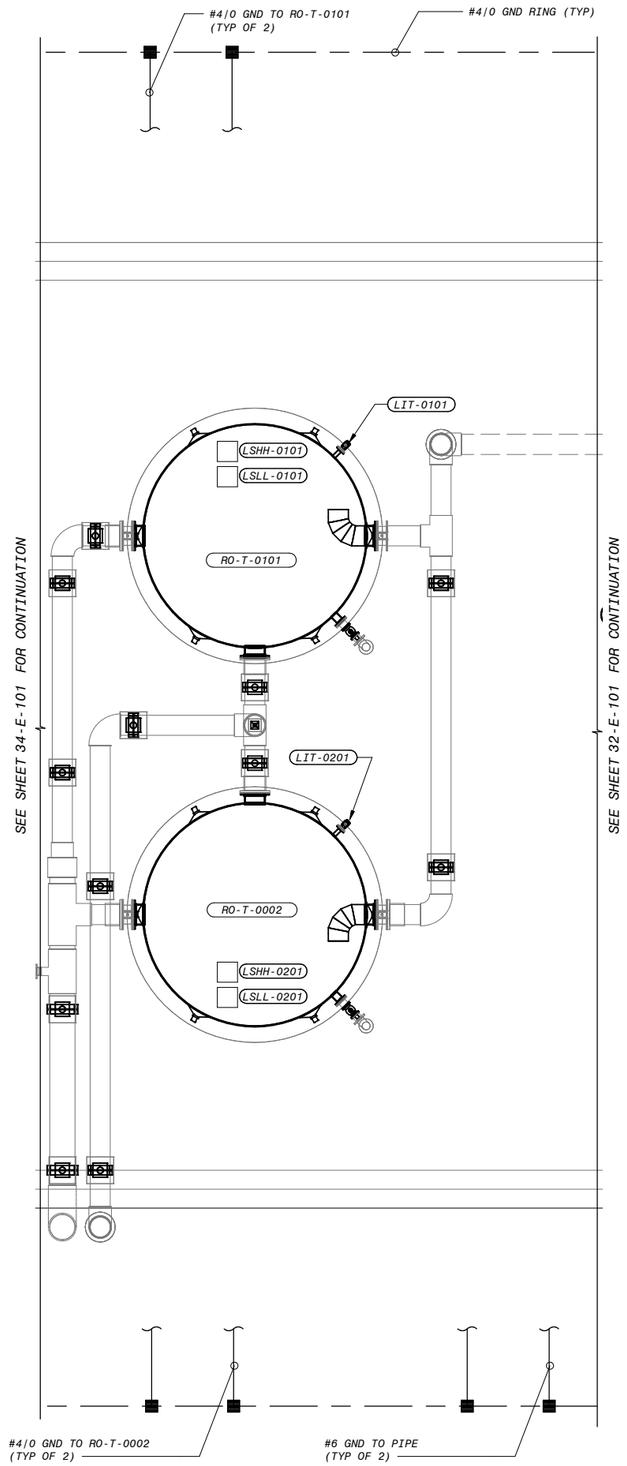


TREATMENT AREA - RO FEED TANKS POWER AND GROUNDING PLAN

1/4" = 1'-0"

NOTES:

1. SEE DRAWING 00-E-001 AND 00-E-002 FOR ELECTRICAL LEGENDS, ABBREVIATIONS AND NOTES.
2. SEE DRAWING 10-E-100 FOR OVERALL ELECTRICAL SITE PLAN.

4' 2' 0' 4' 8'

1/4" = 1'-0"

COASTAL DEVELOPMENT PERMIT PLANS

| DATE | REVISIONS AND RECORD OF USE | NO. | BY | CHK | APP |
|---|---|---|---|---|---|
| 7/30/2019 | 60% SUBMITTAL | B | JSL | MJK | EVB |

BLACK & VEATCH

JOINT VENTURE

FILANC

BLACK & VEATCH

CITY OF MORRO BAY
MORRO BAY WATER
RECLAMATION FACILITY (WRF)

TREATMENT AREA - RO FEED TANKS
ELECTRICAL
POWER AND GROUNDING PLAN

DESIGNED: JSL
DETAILED: SBC
CHECKED:
APPROVED:
DATE:

0 1/2 1

IF THIS BAR DOES NOT MEASURE 1" THEN DRAWING IS NOT TO FULL SCALE

PROJECT NO.
400530

33-E-101
SHEET
OF

PLOTTED: 30-07-2019 16:25:57

D400530

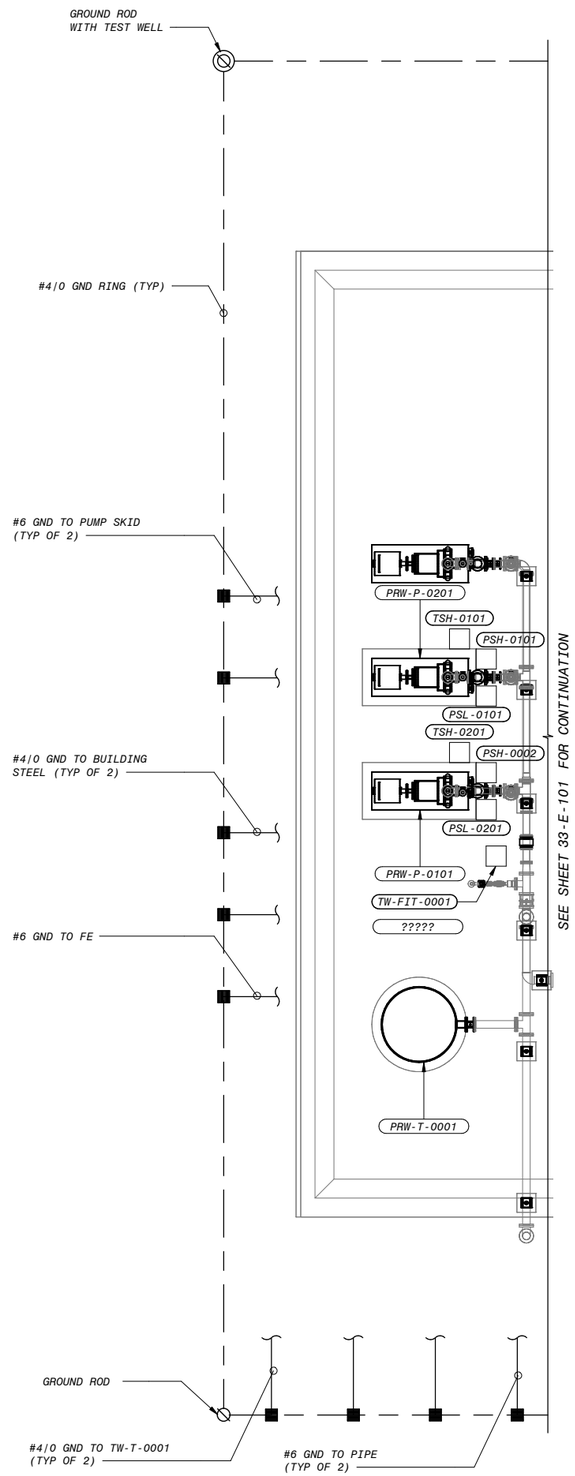


TRAETMENT AREA - RECYCLED WATER PUMPS POWER AND GROUNDING PLAN

1/4" = 1'-0"

NOTES:

1. SEE DRAWING 00-E-001 AND 00-E-002 FOR ELECTRICAL LEGENDS, ABBREVIATIONS AND NOTES.
2. SEE DRAWING 10-E-100 FOR OVERALL ELECTRICAL SITE PLAN.

4' 2' 0' 4' 8'

1/4" = 1'-0"

COASTAL DEVELOPMENT PERMIT PLANS

| NO. | BY | CHK | APP | DATE | REVISIONS AND RECORD OF USE |
|---|---|---|---|---|---|
| B | JSL | MJK | EVB | 7/30/2019 | 60% SUBMITTAL |

BLACK & VEATCH

JOINT VENTURE

FILANC

BLACK & VEATCH

CITY OF MORRO BAY
MORRO BAY WATER
RECLAMATION FACILITY (WRF)

TRAETMENT AREA - RECYCLED WATER PUMPS
ELECTRICAL
POWER AND GROUNDING PLAN

DESIGNED: JSL
DETAILED: SBC
CHECKED:
APPROVED:
DATE:

0 1/2 1

IF THIS BAR DOES NOT MEASURE 1" THEN DRAWING IS NOT TO FULL SCALE

PROJECT NO.
400530

34-E-101

SHEET
OF

PLOTTED: 30-07-2019 16:25:57

D400530

| | | | PANEL BOARD: 50-ELEC-PP-0001 | | BUS: COPPER | | | | MAINS: 3P-150A MAIN BREAKER | | | | |
|---|---|---|---|---|---|---|---|---|---|---|---|---|---|
| PHASE | | | SERVICE: 120/208V, 3PH, 4W, S/N | | RATING: 150A | | | | LOCATION: 50 ELECTRICAL BUILDING | | | PHASE | |
| "A" | "B" | "C" | MOUNTING: SURFACE | | | | | | | | "A" | "B" | "C" |
| V.A. | V.A. | V.A. | LOAD | P | BKR | CKT # | | BKR | P | LOAD | V.A. | V.A. | V.A. |
| 500 | | | 51-CTRL-RIO-0001, 51-CTRL-RIO-0001 (RECEPTACLE) | 1 | 20 | 1 | 2 | 20 | 1 | 51-RO-V-0103 | 200 | | |
| | 200 | | 51-RO-P-0001 | 1 | 20 | 3 | 4 | 20 | 1 | 51-CIP-V-0103 | | 200 | |
| | | 200 | 51-RO-LCP-1001 | 1 | 20 | 5 | 6 | 20 | 1 | 51-RO-LCP-2001 | | | 200 |
| 200 | | | 51-RO-LCP-3001 | 1 | 20 | 7 | 8 | 20 | 1 | 61-CAL-V-0001 | 200 | | |
| | 500 | | 65-TW-SAMP-0001 | 1 | 20 | 9 | 10 | 20 | 1 | 51-RO ANALYSER PANEL | | 500 | |
| | | 200 | 52-UV-LCP-0001 | 1 | 20 | 11 | 12 | 20 | 1 | 62-TW ANALYSER PANEL | | | 500 |
| 500 | | | 90-CTRL-RIO-0001, 90-CTRL-RIO-0001(RECEPTACLE) | 1 | 20 | 13 | 14 | 20 | 1 | 90-NOCL-LCP-0101, 90-NOCL-LCP-0201 | 500 | | |
| | 500 | | 90-NOCL-LCP-0301, 90-NOCL-LCP-0401 | 1 | 20 | 15 | 16 | 20 | 1 | 90-NOCL-LCP-0501, 90-NOCL-LCP-0601 | | 500 | |
| | | 250 | 90-NOCL-LCP-0701 | 1 | 20 | 17 | 18 | 20 | 1 | 90-NAOH-LCP-0101, 90-NAOH-LCP-0201 | | | 600 |
| 250 | | | 90-NAOH-LCP-0301 | 1 | 20 | 19 | 20 | 20 | 1 | 90-NSH-LCP-0101 | 250 | | |
| | 250 | | 90-ANTI-LCP-0101 | 1 | 20 | 21 | 22 | 20 | 1 | 90-CA-LCP-0101, 90-CA-LCP-0201 | | 600 | |
| | | 500 | 90-HSO4-LCP-0101, 90-HSO4-LCP-0201 | 1 | 20 | 23 | 24 | 20 | 1 | 90-POLF-LCP-0001 | | | 250 |
| 0 | | | SPARE | 1 | 20 | 25 | 26 | 20 | 1 | SPARE | 0 | | |
| | 0 | | SPARE | 1 | 20 | 27 | 28 | 20 | 1 | SPARE | | 0 | |
| | | 0 | SPARE | 1 | 20 | 29 | 30 | 20 | 1 | SPARE | | | 0 |
| 0 | | | SPARE | 1 | 20 | 31 | 32 | 20 | 1 | SPARE | 0 | | |
| | 0 | | SPARE | 1 | 20 | 33 | 34 | 20 | 1 | SPARE | | 0 | |
| | | 0 | SPARE | 1 | 20 | 35 | 36 | 20 | 1 | SPARE | | | 0 |
| 0 | | | SPARE | 1 | 20 | 37 | 38 | 20 | 1 | SPARE | 0 | | |
| | 0 | | SPARE | 1 | 20 | 39 | 40 | 20 | 1 | SPARE | | 0 | |
| | | 0 | SPARE | 1 | 20 | 41 | 42 | 20 | 1 | SPARE | | | 0 |
| 1450 | | | TOTAL "A" | | | 2600 | | | | TOTAL "A" | 1150 | | |
| | 1450 | | TOTAL "B" | | | 3250 | | | | TOTAL "B" | | 1800 | |
| | | 1150 | TOTAL "C" | | | 2700 | | | | TOTAL "C" | | | 1550 |
| | | | TOTAL | | | 8550 | | | | | | | |

RO/UV BUILDING 50-ELEC-PP-0001
POWER PANELS SCHEDULE
NO SCALE

| | | | PANEL BOARD: 50-ELEC-PP-0002 | | BUS: COPPER | | | | MAINS: 3P-200A MAIN BREAKER | | | | |
|---|---|---|---|---|---|---|---|---|---|---|---|---|---|
| PHASE | | | SERVICE: 480 3PH, 4W, S/N | | RATING: 200A | | | | LOCATION: 50 ELECTRICAL | | | PHASE | |
| "A" | "B" | "C" | MOUNTING: SURFACE | | | | | | BUILDING | | "A" | "B" | "C" |
| V.A. | V.A. | V.A. | LOAD | P | BKR | CKT # | | BKR | P | LOAD | V.A. | V.A. | V.A. |
| 345 | 345 | 345 | 51-RO-V-0012 | 3 | 15 | 1 | 2 | 15 | 3 | 52-UV-LCP-0101 | 345 | 345 | 345 |
| 345 | 345 | 345 | 52-UV-LCP-0201 | 3 | 15 | 3 | 4 | 15 | 3 | SPARE | 345 | 345 | 345 |
| 0 | 0 | 0 | SPARE | 3 | 15 | 5 | 6 | 15 | 3 | SPARE | 345 | 345 | 345 |
| 0 | 0 | 0 | SPARE | 3 | 15 | 7 | 8 | 15 | 3 | SPARE | 0 | 0 | 0 |
| 0 | 0 | 0 | SPARE | 3 | 15 | 9 | 10 | 15 | 3 | SPARE | 0 | 0 | 0 |
| 0 | 0 | 0 | SPARE | 3 | 15 | 11 | 12 | 15 | 3 | SPARE | 0 | 0 | 0 |
| 0 | 0 | 0 | SPARE | 3 | 15 | 13 | 14 | 15 | 3 | SPARE | 0 | 0 | 0 |
| 0 | 0 | 0 | SPARE | 3 | 15 | 15 | 16 | 15 | 3 | SPARE | 0 | 0 | 0 |
| 0 | 0 | 0 | SPARE | 3 | 15 | 17 | 18 | 15 | 3 | SPARE | 0 | 0 | 0 |
| 0 | 0 | 0 | SPARE | 3 | 15 | 19 | 20 | 15 | 3 | SPARE | 0 | 0 | 0 |
| 0 | 0 | 0 | SPARE | 3 | 15 | 21 | 22 | 15 | 3 | SPARE | 0 | 0 | 0 |
| 0 | 0 | 0 | SPARE | 3 | 15 | 23 | 24 | 30 | 3 | SPARE | 0 | 0 | 0 |
| 0 | 0 | 0 | SPARE | 3 | 30 | 25 | 26 | 30 | 3 | SPARE | 0 | 0 | 0 |
| 0 | 0 | 0 | SPARE | 3 | 30 | 27 | 28 | 15 | 3 | SPARE | 0 | 0 | 0 |
| 690.7 | | | TOTAL "A" | | | 1727 | | | | TOTAL "A" | 1036 | | |
| | 691 | | TOTAL "B" | | | 1727 | | | | TOTAL "B" | | 1036 | |
| | | 691 | TOTAL "C" | | | 1727 | | | | TOTAL "C" | | | 1036 |
| | | | TOTAL | | | 5181 | | | | | | | |

RO/UV BUILDING 50-ELEC-PP-0002
POWER PANELS SCHEDULE
NO SCALE

NOTES:

1. SEE DRAWINGS 00-E-001 AND 00-E-002 FOR ELECTRICAL LEGEND, ABBREVIATIONS AND NOTES.

COASTAL DEVELOPMENT PERMIT PLANS

| NO. | BY | CHK | APP |
|---|---|---|---|
| B | JSL | MJK | EVB |

| DATE | REVISIONS AND RECORD OF USE |
|---|---|
| 7/30/2019 | 60% SUBMITTAL |

BLACK & VEATCH
JOINT VENTURE
FILANC
BLACK & VEATCH

CITY OF MORRO BAY
MORRO BAY WRF
RECLAMATION FACILITY (WRF)

RO/UV BUILDING
ELECTRICAL
POWER PANELS SCHEDULE

DESIGNED: JSL
DETAILED: SBC
CHECKED:
APPROVED:
DATE:

0 1/2 1
IF THIS BAR DOES NOT MEASURE 1" THEN DRAWING IS NOT TO FULL SCALE

PROJECT NO.
400530

50-E-601
SHEET
OF

F090000A
D400530
PLOTTED: 7/30/2019 1:55 AM FILE: C:\PWBatchPDF\Process\400530 - Morro Bay WRF\400530-50-E-601.dwg

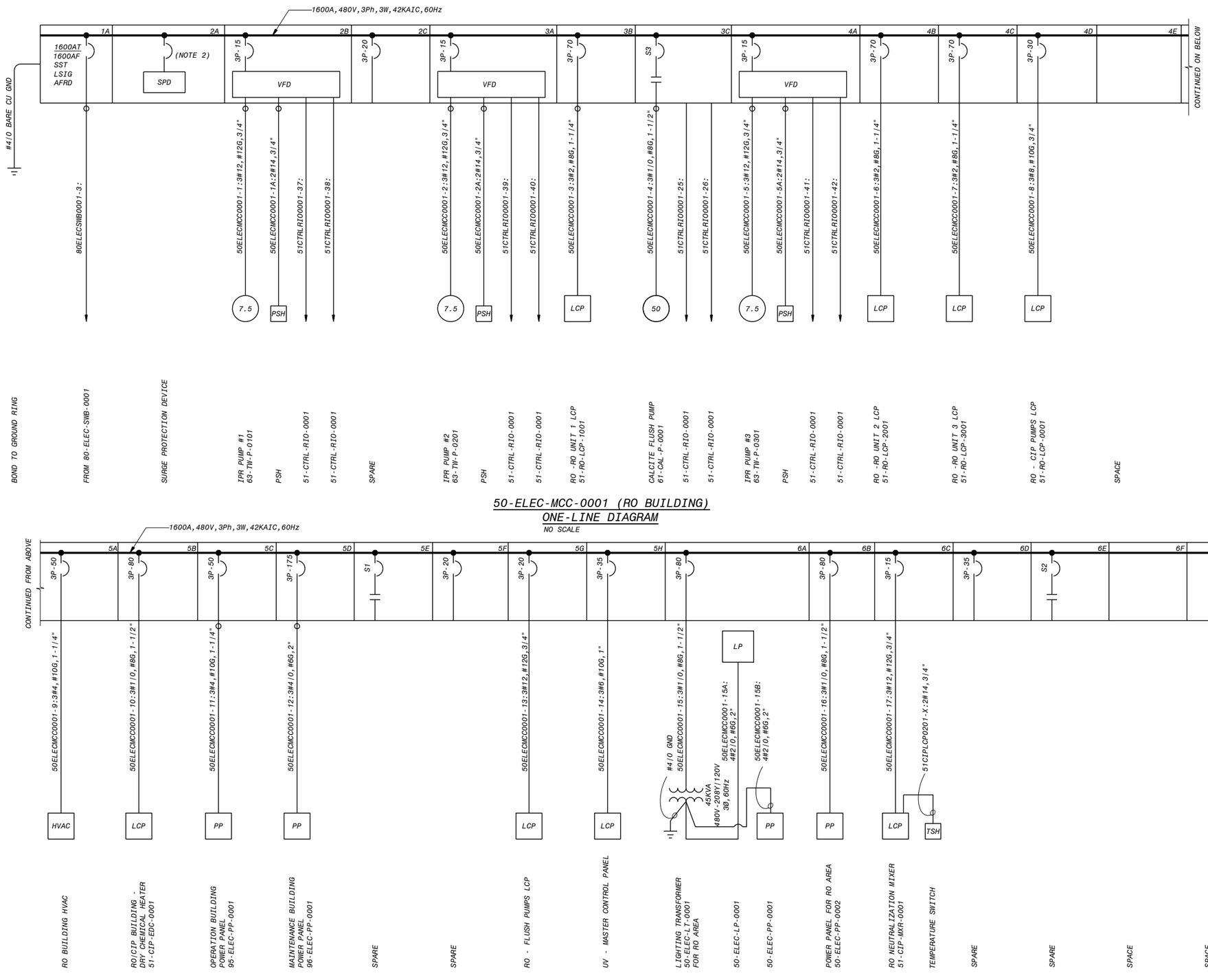


NOTES:

1. SEE DRAWINGS 00-E-001 AND 00-E-002 FOR ELECTRICAL LEGEND, ABBREVIATIONS AND NOTES.
2. CIRCUIT BREAKER SIZE SHALL BE RECOMMENDED BY MCC SUPPLIER.

COASTAL DEVELOPMENT PERMIT PLANS

| NO. | BY | CHK | APP |
|---|---|---|---|
| B | JSL | MJK | EVB |

| DATE | REVISIONS AND RECORD OF USE |
|---|---|
| 7/30/2019 | 60% SUBMITTAL |

BLACK & VEATCH
JOINT VENTURE
FILANC
BLACK & VEATCH

CITY OF MORRO BAY
MORRO BAY WRF
RECLAMATION FACILITY (WRF)

RO/UV BUILDING
ELECTRICAL
50-ELEC-MCC-0001 ONE-LINE DIAGRAM

DESIGNED: JSL
DETAILED: SBC
CHECKED:
APPROVED:
DATE:

0 1/2 1
IF THIS BAR DOES NOT MEASURE 1" THEN DRAWING IS NOT TO FULL SCALE

PROJECT NO.
400530

50-E-701
SHEET
1 OF 2

F09000A
D400530
PLOTTED: 7/30/2019 8:31 AM FILE: C:\PWBatchPDF\Process\400530 - Morro Bay WRF\400530-50-E-701.dwg

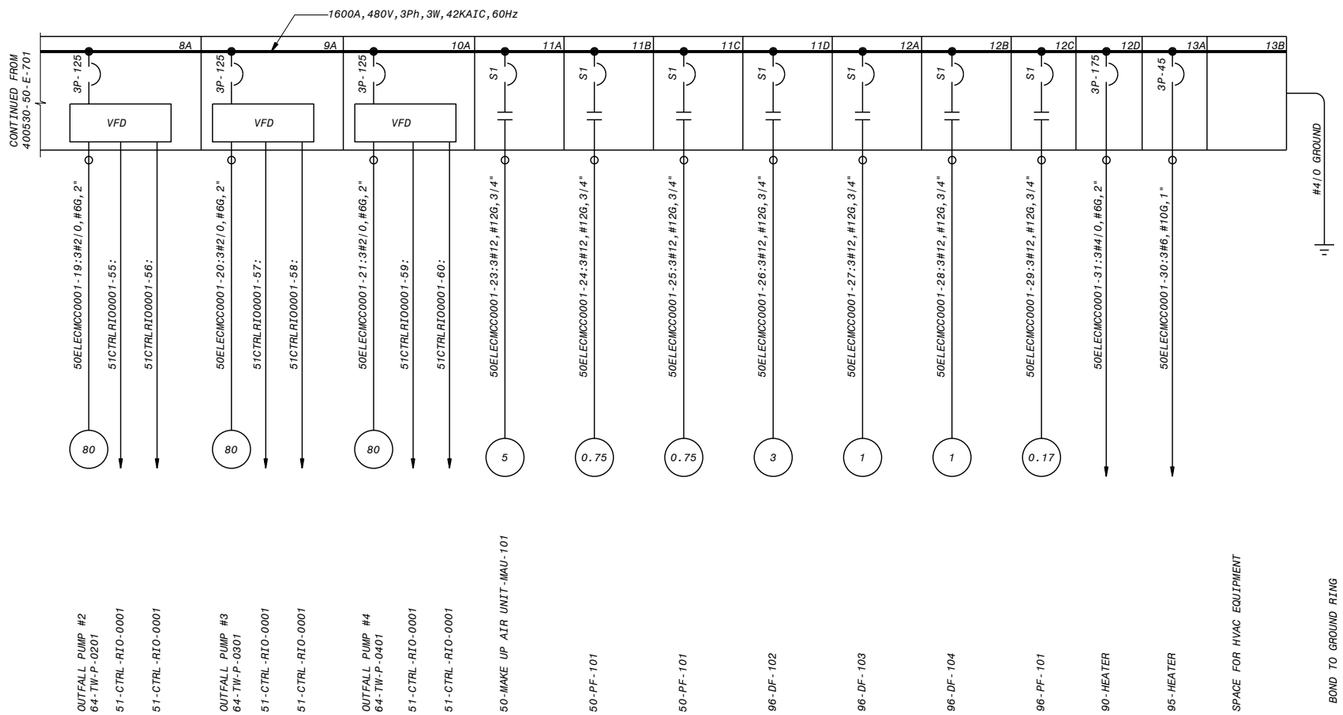


## 50-ELEC-MCC-0001 (RO BUILDING)
## ONE-LINE DIAGRAM
NO SCALE

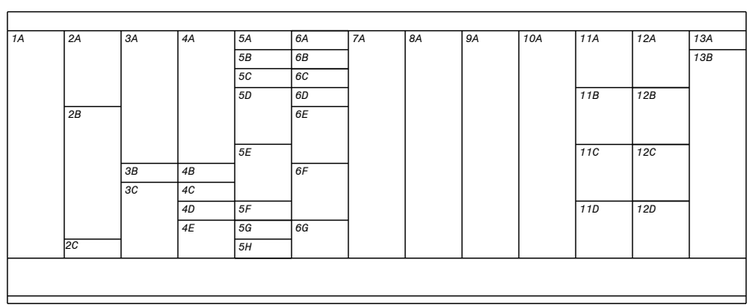


## 50-ELEC-MCC-0001 (RO BUILDING)
## FRONT ELEVATION
NO SCALE

**NOTES:**

1. SEE DRAWINGS 00-E-001 AND 00-E-002 FOR ELECTRICAL LEGEND, ABBREVIATIONS AND NOTES.
2. CIRCUIT BREAKER SIZE SHALL BE RECOMMENDED BY MCC SUPPLIER.

# COASTAL DEVELOPMENT PERMIT PLANS

| NO. | DATE | REVISIONS AND RECORD OF USE | BY | CHK | APD |
|---|---|---|---|---|---|
| B | 7/30/2019 | 60% SUBMITTAL | JSL | MJK | EVB |

BLACK & VEATCH
JOINT VENTURE
FILANC
BLACK & VEATCH

CITY OF MORRO BAY
MORRO BAY WRF
RECLAMATION FACILITY (WRF)

RO/UV BUILDING
ELECTRICAL
50-ELEC-MCC-0001 ONE-LINE DIAGRAM

DESIGNED: JSL
DETAILED: SBC
CHECKED:
APPROVED:
DATE:

0 1/2 1
IF THIS BAR DOES NOT MEASURE 1" THEN DRAWING IS NOT TO FULL SCALE

PROJECT NO.
400530

50-E-702
SHEET
2 OF 2

FD9000A
D400530
PLOTTED: 7/30/2019 8:32 AM FILE: C:\PWBatchPDF\Process\400530 - Morro Bay WRF\400530-50-E-702.dwg

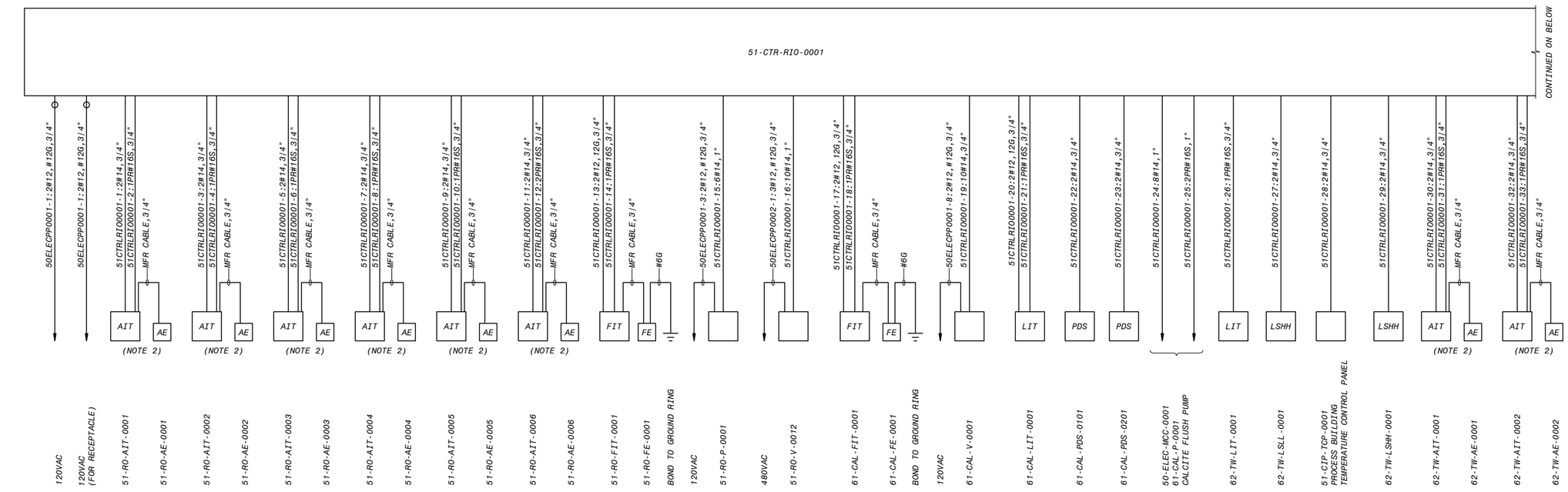


51-CTR-RIO-0001 (RO/UV BUILDING)
ONE-LINE DIAGRAM
NO SCALE

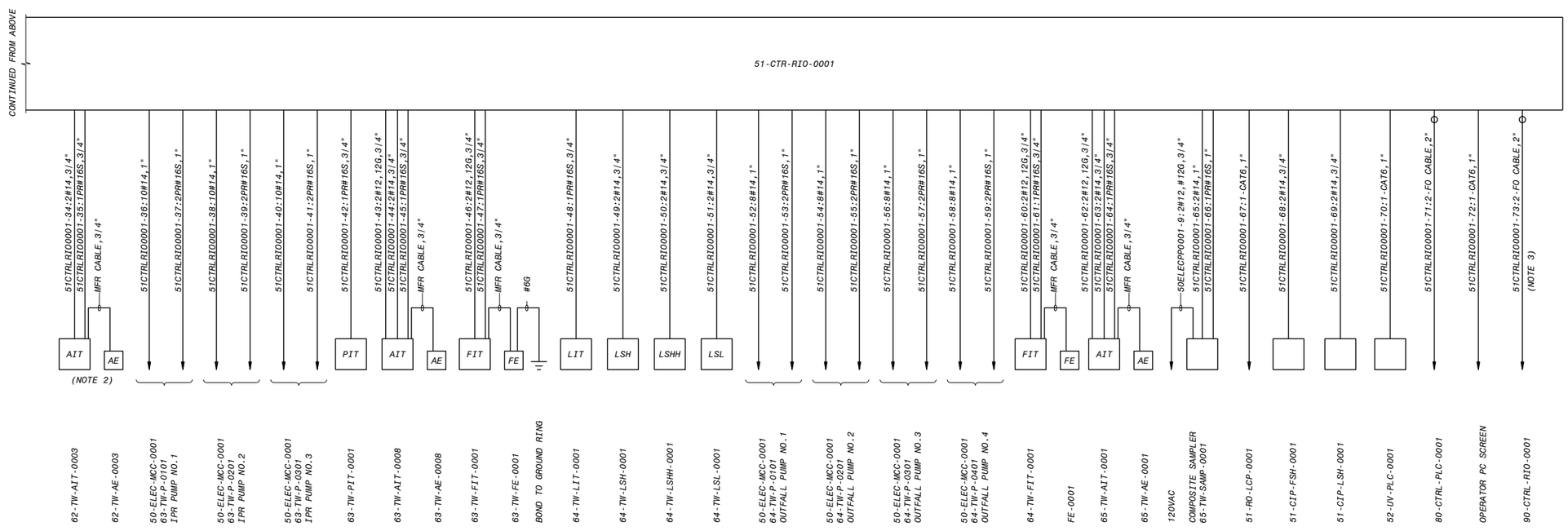


51-CTR-RIO-0001 (RO/UV BUILDING)
ONE-LINE DIAGRAM
NO SCALE

NOTES:

1. SEE DRAWINGS 00-E-001 AND 00-E-002 FOR ELECTRICAL LEGEND, ABBREVIATIONS AND NOTES.
2. POWER SUPPLY TO THE ANALYSERS SHALL BE DERIVED FROM ANALYSER PANEL.
3. SEE 00-I-701 FOR FIBER OPTIC CABLE REQUIREMENT.

COASTAL DEVELOPMENT PERMIT PLANS

| NO. | BY | CHK | APP |
|---|---|---|---|
| B | JSL | MJK | EVB |

| DATE | REVISIONS AND RECORD OF USE |
|---|---|
| 7/30/2019 | 60% SUBMITTAL |

BLACK & VEATCH
JOINT VENTURE
FILANC
BLACK & VEATCH

CITY OF MORRO BAY
MORRO BAY WRF
RECLAMATION FACILITY (WRF)

RO/UV BUILDING
ELECTRICAL
51-CTR-RIO-0001 ONE-LINE DIAGRAM

DESIGNED: JSL
DETAILED: SBC
CHECKED:
APPROVED:
DATE:

0 1/2 1
IF THIS BAR DOES NOT MEASURE 1" THEN DRAWING IS NOT TO FULL SCALE

PROJECT NO.
400530

50-E-711
SHEET
OF

F09000A
D400530
PLOTTED: 7/30/2019 8:32 AM FILE: C:\PWBatchPDF\Process\400530 - Morro Bay WRF\400530-50-E-711.dwg

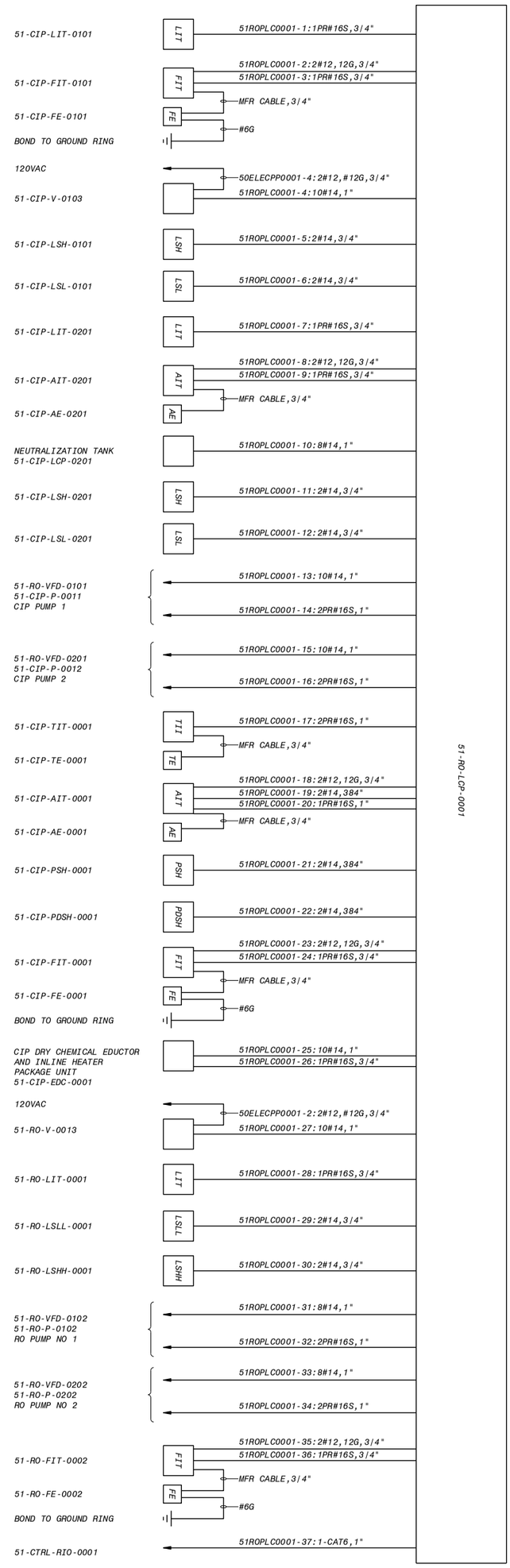


## 51-RO-LCP-0001 (RO/UV BUILDING) ONE-LINE DIAGRAM

NO SCALE

COASTAL DEVELOPMENT PERMIT PLANS

**NOTES:**

1. SEE DRAWINGS 00-E-001 AND 00-E-002 FOR ELECTRICAL LEGEND, ABBREVIATIONS AND NOTES.

DESIGNED: JSL
DETAILED: SBC
CHECKED:
APPROVED:
DATE:

0 1/2 1
IF THIS BAR DOES NOT MEASURE 1" THEN DRAWING IS NOT FULL SCALE

PROJECT NO. 400530

50-E-712
SHEET OF

CITY OF MORRO BAY
MORRO BAY WRF
RECLAMATION FACILITY (WRF)

RO/UV BUILDING
ELECTRICAL
51-RO-LCP-0001 ONE-LINE DIAGRAM

BLACK & VEATCH
JOINT VENTURE
FILANC BLACK & VEATCH

| DATE | REVISIONS AND RECORD OF USE | NO. | BY | CHK | APR |
|---|---|---|---|---|---|
| 7/30/2019 | 60% SUBMITTAL | B | JSL | MJK | EVB |

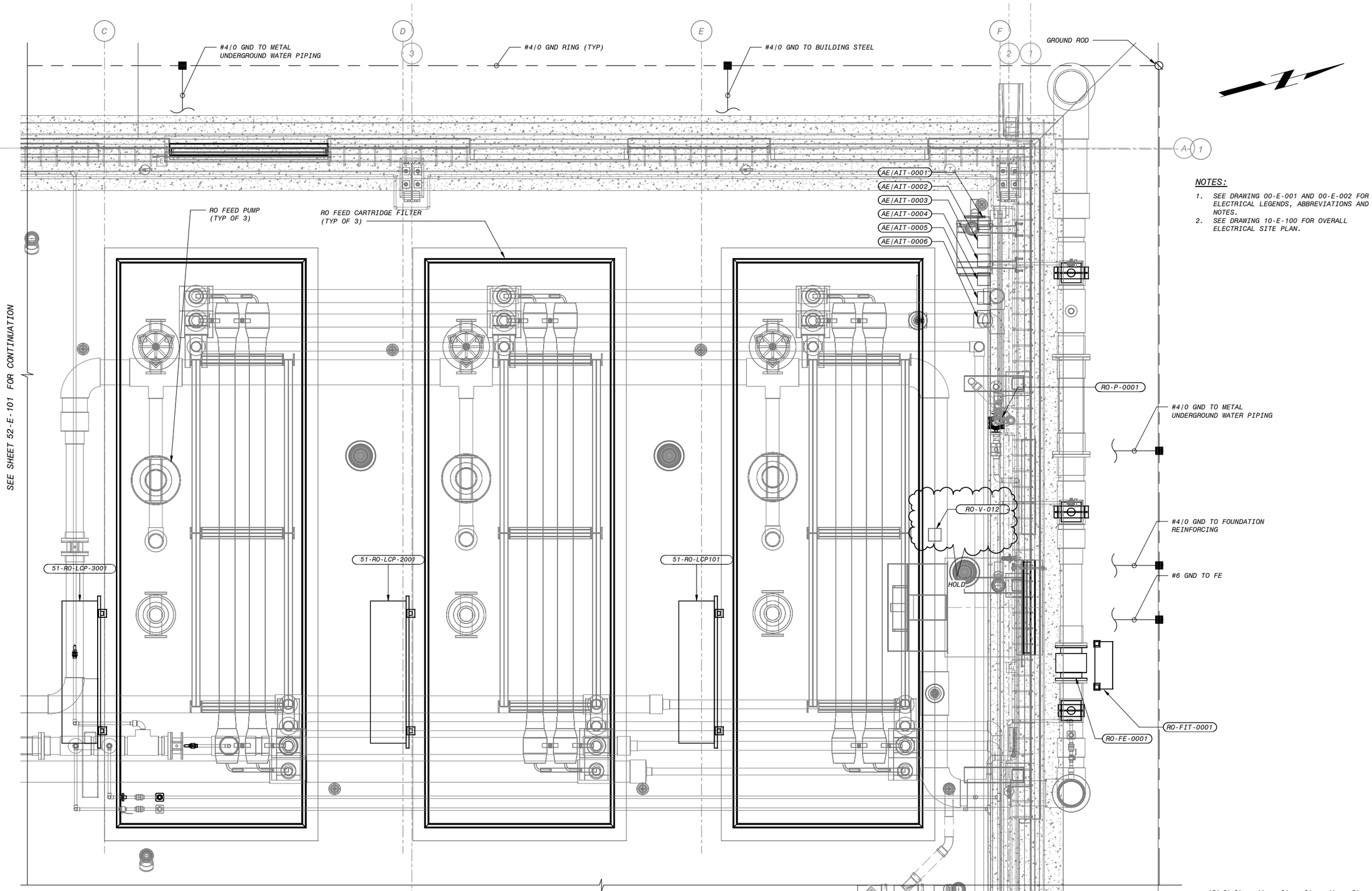


## NOTES:

1. SEE DRAWING 00-E-001 AND 00-E-002 FOR ELECTRICAL LEGENDS, ABBREVIATIONS AND NOTES.
2. SEE DRAWING 10-E-100 FOR OVERALL ELECTRICAL SITE PLAN.

RO/UV BUILDING - RO SYSTEM POWER AND GROUNDING PLAN

1/2" = 1'-0"

3

COASTAL DEVELOPMENT PERMIT PLANS

| NO. | BY | CHK | APP | DATE | REVISIONS AND RECORD OF USE |
|---|---|---|---|---|---|
| B | JSL | MJK | EVB | 7/30/2019 | 60% SUBMITTAL |

BLACK & VEATCH
JOINT VENTURE
FILANC
BLACK & VEATCH

CITY OF MORRO BAY
MORRO BAY WRF
RECLAMATION FACILITY (WRF)

RO/UV BUILDING - RO SYSTEM
ELECTRICAL
POWER AND GROUNDING PLAN

DESIGNED: JSL
DETAILED: SBC
CHECKED:
APPROVED:
DATE:

0 1/2 1
IF THIS BAR DOES NOT MEASURE 1" THEN DRAWING IS NOT TO FULL SCALE

PROJECT NO.
400530

51-E-101
SHEET
OF

PLOTTED: 30-07-2019 17:07:35
D400530

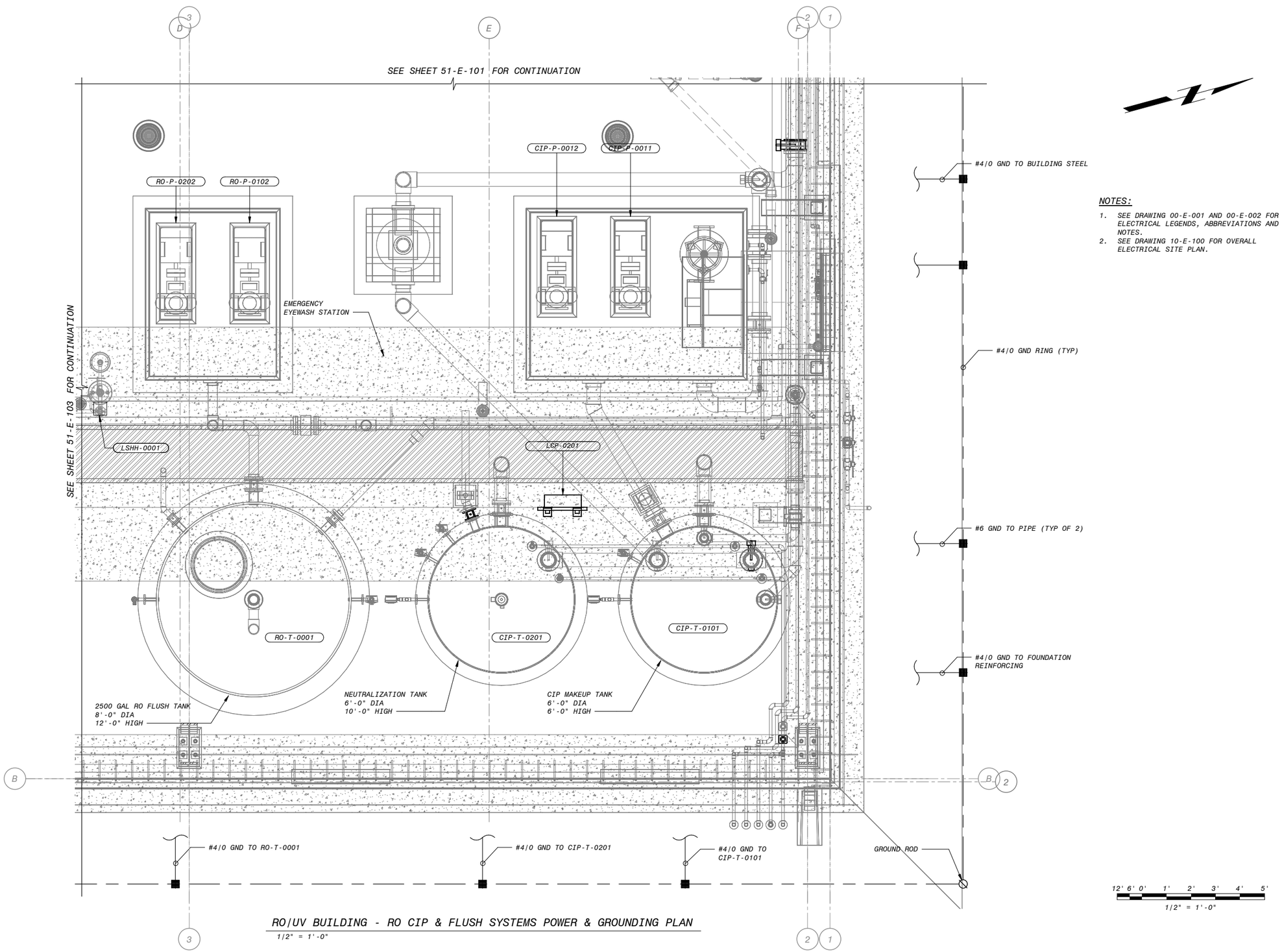


RO/UV BUILDING - RO CIP & FLUSH SYSTEMS POWER & GROUNDING PLAN

1/2" = 1'-0"

NOTES:

1. SEE DRAWING 00-E-001 AND 00-E-002 FOR ELECTRICAL LEGENDS, ABBREVIATIONS AND NOTES.
2. SEE DRAWING 10-E-100 FOR OVERALL ELECTRICAL SITE PLAN.

| NO. | BY | CHK | APP | DATE | REVISIONS AND RECORD OF USE |
|---|---|---|---|---|---|
| B | JSL | MJK | EVB | 7/30/2019 | 60% SUBMITTAL |

BLACK & VEATCH

JOINT VENTURE

FILANC

BLACK & VEATCH

CITY OF MORRO BAY
MORRO BAY WRF
RECLAMATION FACILITY (WRF)

RO CIP & FLUSH SYSTEMS
ELECTRICAL
POWER AND GROUNDING PLAN

DESIGNED: JSL
DETAILED: SBC
CHECKED:
APPROVED:
DATE:

0 1/2 1
IF THIS BAR DOES NOT MEASURE 1" THEN DRAWING IS NOT TO FULL SCALE

PROJECT NO.
400530

51-E-102
SHEET
OF

COASTAL DEVELOPMENT PERMIT PLANS

PLOTTED: 30-07-2019 17:07:37
D400530

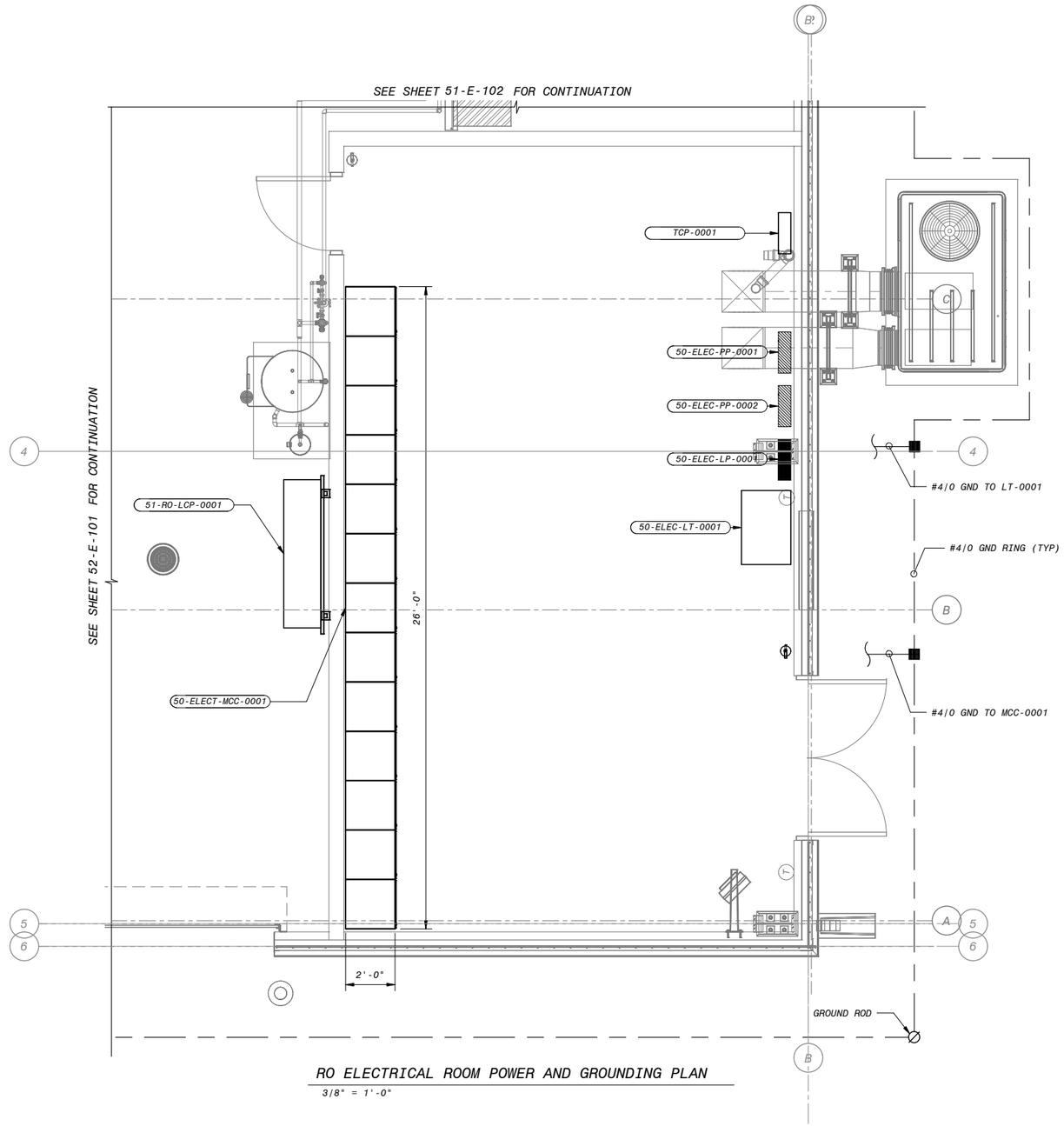


RO ELECTRICAL ROOM POWER AND GROUNDING PLAN

3/8" = 1'-0"

NOTES:

1. SEE DRAWING 00-E-001 AND 00-E-002 FOR ELECTRICAL LEGENDS, ABBREVIATIONS AND NOTES.
2. SEE DRAWING 10-E-100 FOR OVERALL ELECTRICAL SITE PLAN.

| DATE | REVISIONS AND RECORD OF USE | NO. | BY | CHK | APP |
|---|---|---|---|---|---|
| 7/30/2019 | 60% SUBMITTAL | B | JSL | MJK | EVB |

BLACK & VEATCH

JOINT VENTURE

FILANC

BLACK & VEATCH

CITY OF MORRO BAY
MORRO BAY WRF
RECLAMATION FACILITY (WRF)

RO ELECTRICAL ROOM
ELECTRICAL
POWER AND GROUNDING PLAN

DESIGNED: JSL
DETAILED: SBC
CHECKED:
APPROVED:
DATE:

0 1/2 1

IF THIS BAR DOES NOT MEASURE 1" THEN DRAWING IS NOT TO FULL SCALE

12" 0' 1' 2' 3' 4' 5' 6' 7'

3/8" = 1'-0"

PROJECT NO.
400530

51-E-103
SHEET
OF

COASTAL DEVELOPMENT PERMIT PLANS

PLOTTED: 30-07-2019 17:07:38

D400530

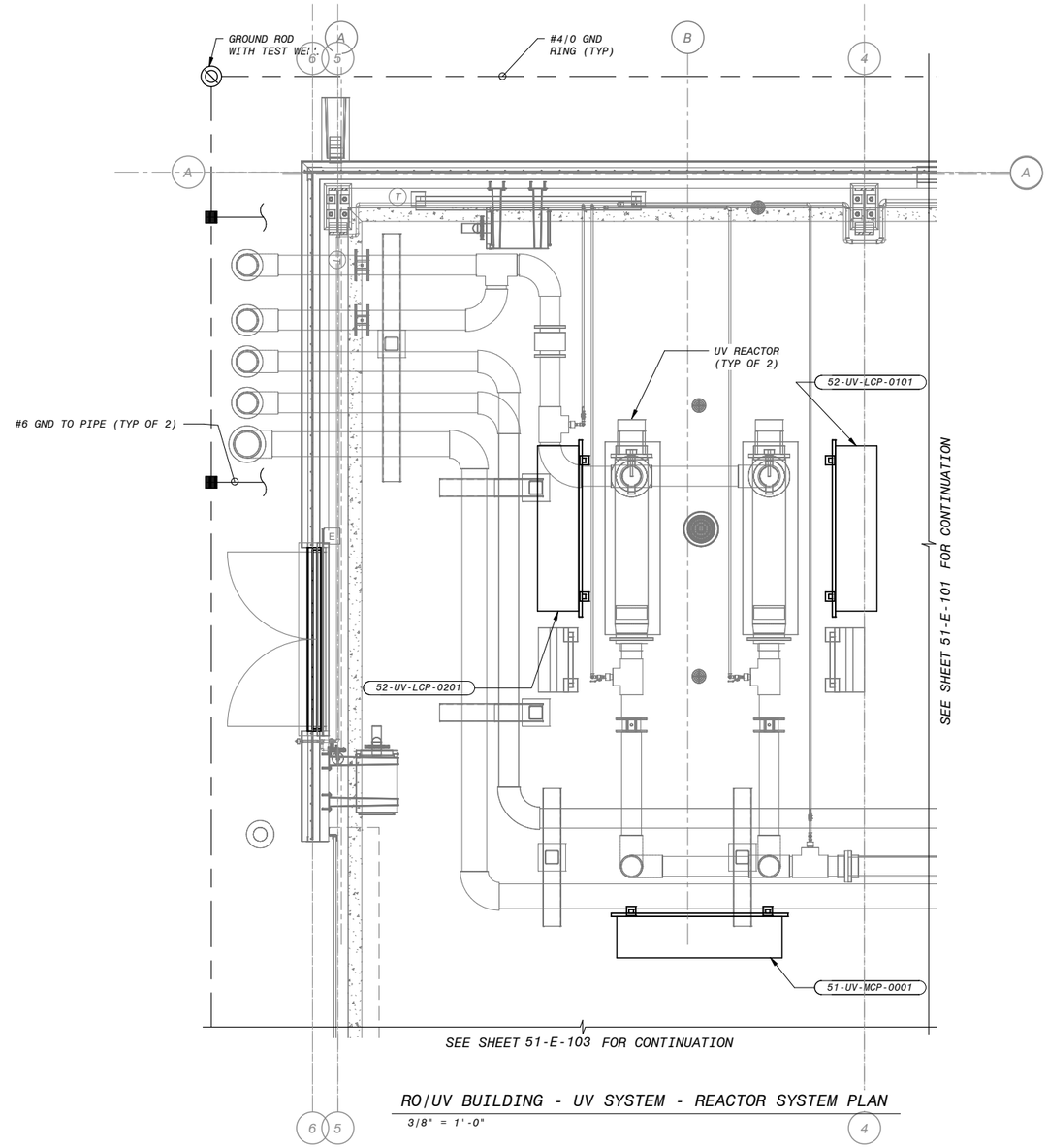


RO/UV BUILDING - UV SYSTEM - REACTOR SYSTEM PLAN

3/8" = 1'-0"

NOTES:

1. SEE DRAWING 00-E-001 AND 00-E-002 FOR ELECTRICAL LEGENDS, ABBREVIATIONS AND NOTES.
2. SEE DRAWING 10-E-100 FOR OVERALL ELECTRICAL SITE PLAN.

| DATE | REVISIONS AND RECORD OF USE | NO. | BY | CHK | APP |
|---|---|---|---|---|---|
| 7/30/2019 | 60% SUBMITTAL | B | JSL | MJK | EVB |

BLACK & VEATCH
JOINT VENTURE
FILANC
BLACK & VEATCH

CITY OF MORRO BAY
MORRO BAY WRF
RECLAMATION FACILITY (WRF)

RO/UV BUILDING - UV SYSTEM
ELECTRICAL
POWER AND GROUNDING PLAN

DESIGNED: JSL
DETAILED: SBC
CHECKED:
APPROVED:
DATE:

0 1/2 1
IF THIS BAR DOES NOT MEASURE 1" THEN DRAWING IS NOT TO FULL SCALE

PROJECT NO.
400530

52-E-101
SHEET
OF

12" 0' 1' 2' 3' 4' 5' 6' 7'
3/8" = 1'-0"

COASTAL DEVELOPMENT PERMIT PLANS

PLOTTED: 30-07-2019 17:07:39
D400530

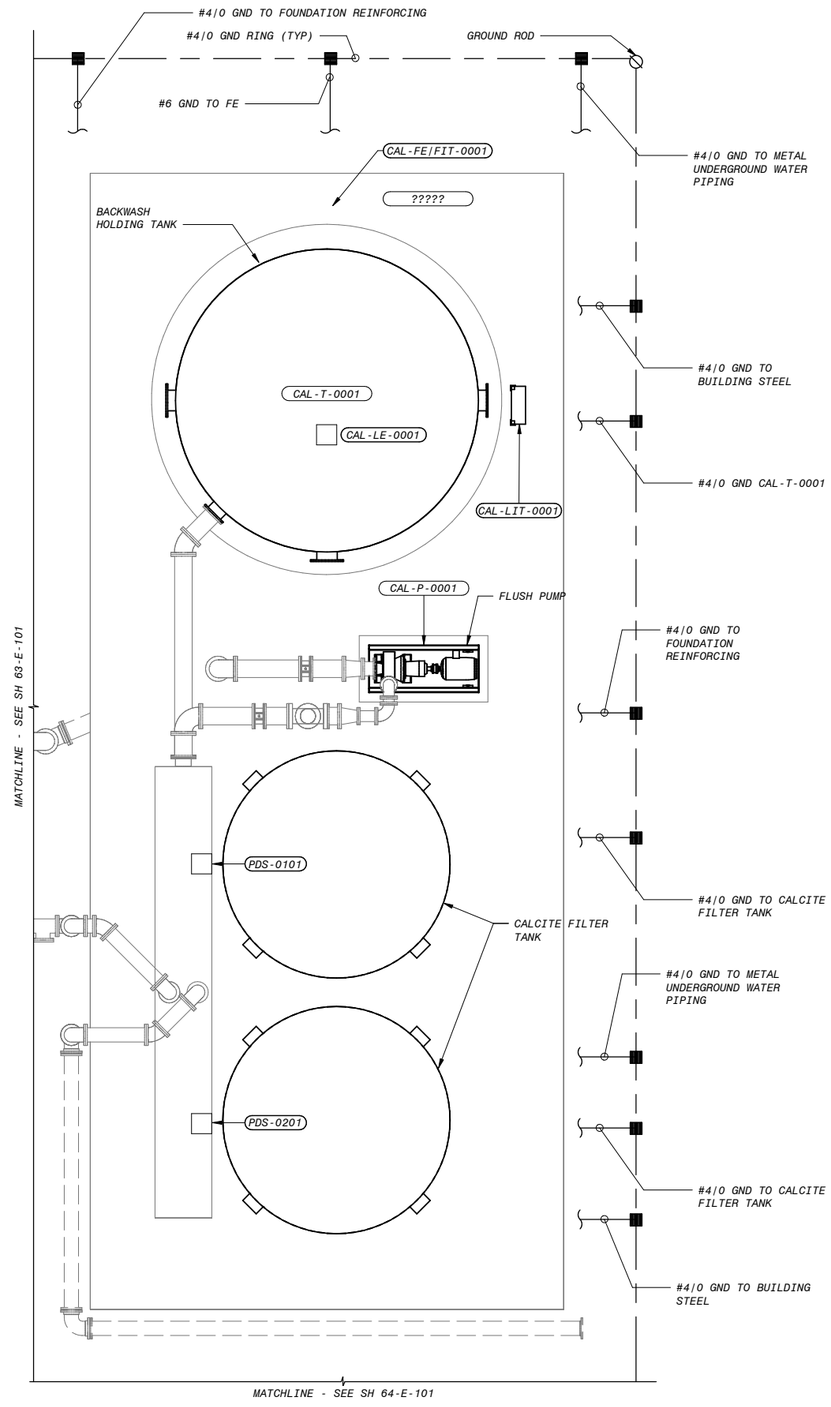


PRODUCT WATER AREA - CALCITE CONTACTOR POWER AND GROUNDING PLAN

1/4" = 1'-0"

NOTES:

1. SEE DRAWING 00-E-001 AND 00-E-002 FOR ELECTRICAL LEGENDS, ABBREVIATIONS AND NOTES.
2. SEE DRAWING 10-E-100 FOR OVERALL ELECTRICAL SITE PLAN.

| NO. | BY | CHK | APP |
|---|---|---|---|
| B | JSL | MJK | EVB |

| DATE | REVISIONS AND RECORD OF USE |
|---|---|
| 7/30/2019 | 60% SUBMITTAL |

BLACK & VEATCH

JOINT VENTURE

FILANC

BLACK & VEATCH

CITY OF MORRO BAY
MORRO BAY WATER
RECLAMATION FACILITY (WRF)

PRODUCT WATER AREA - CALCITE CONTACTOR
ELECTRICAL
POWER AND GROUNDING PLAN

DESIGNED: JSL
DETAILED: SBC
CHECKED:
APPROVED:
DATE:

0 1/2 1

IF THIS BAR DOES NOT MEASURE 1" THEN DRAWING IS NOT TO FULL SCALE

PROJECT NO.
400530

61-E-101
SHEET
OF

COASTAL DEVELOPMENT PERMIT PLANS

PLOTTED: 30-07-2019 17:15:45
D400530

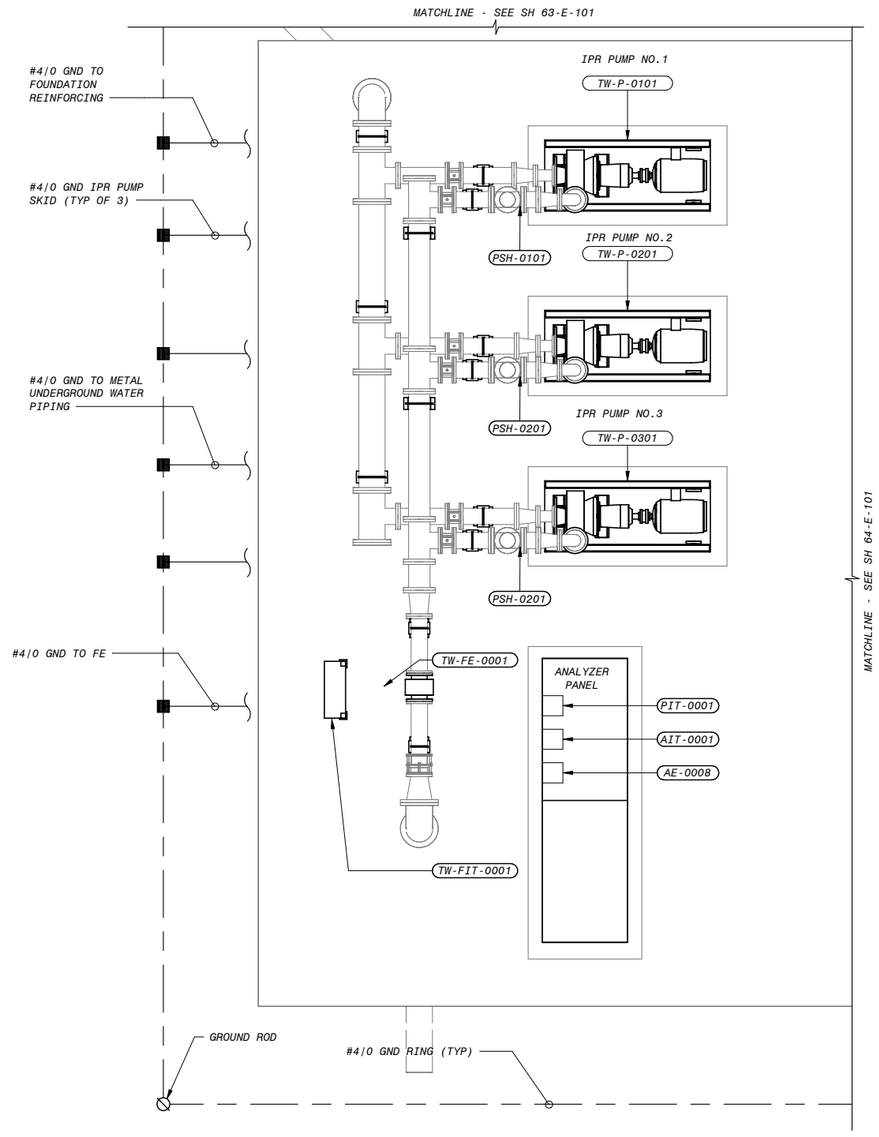


PRODUCT WATER AREA - IPR PRODUCT WATER PUMP STATION POWER AND GROUNDING PLAN

3/8" = 1'-0"

NOTES:

1. SEE DRAWING 00-E-001 AND 00-E-002 FOR ELECTRICAL LEGENDS, ABBREVIATIONS AND NOTES.
2. SEE DRAWING 10-E-100 FOR OVERALL ELECTRICAL SITE PLAN.

| DATE | REVISIONS AND RECORD OF USE | NO. | BY | CHK | APP |
|---|---|---|---|---|---|
| 7/30/2019 | 60% SUBMITTAL | B | JSL | MJK | EVB |

BLACK & VEATCH

JOINT VENTURE

FILANC

BLACK & VEATCH

CITY OF MORRO BAY
MORRO BAY WATER
RECLAMATION FACILITY (WRF)

PRODUCT WATER AREA
IPR PRODUCT WATER PUMP STATION
ELECTRICAL
POWER AND GROUNDING PLAN

DESIGNED: JSL
DETAILED: SBC
CHECKED:
APPROVED:
DATE:

0 1/2 1
IF THIS BAR DOES NOT MEASURE 1" THEN DRAWING IS NOT TO FULL SCALE

PROJECT NO.
400530

62-E-101
SHEET
OF

COASTAL DEVELOPMENT PERMIT PLANS

PLOTTED: 30-07-2019 17:15:45
D400530

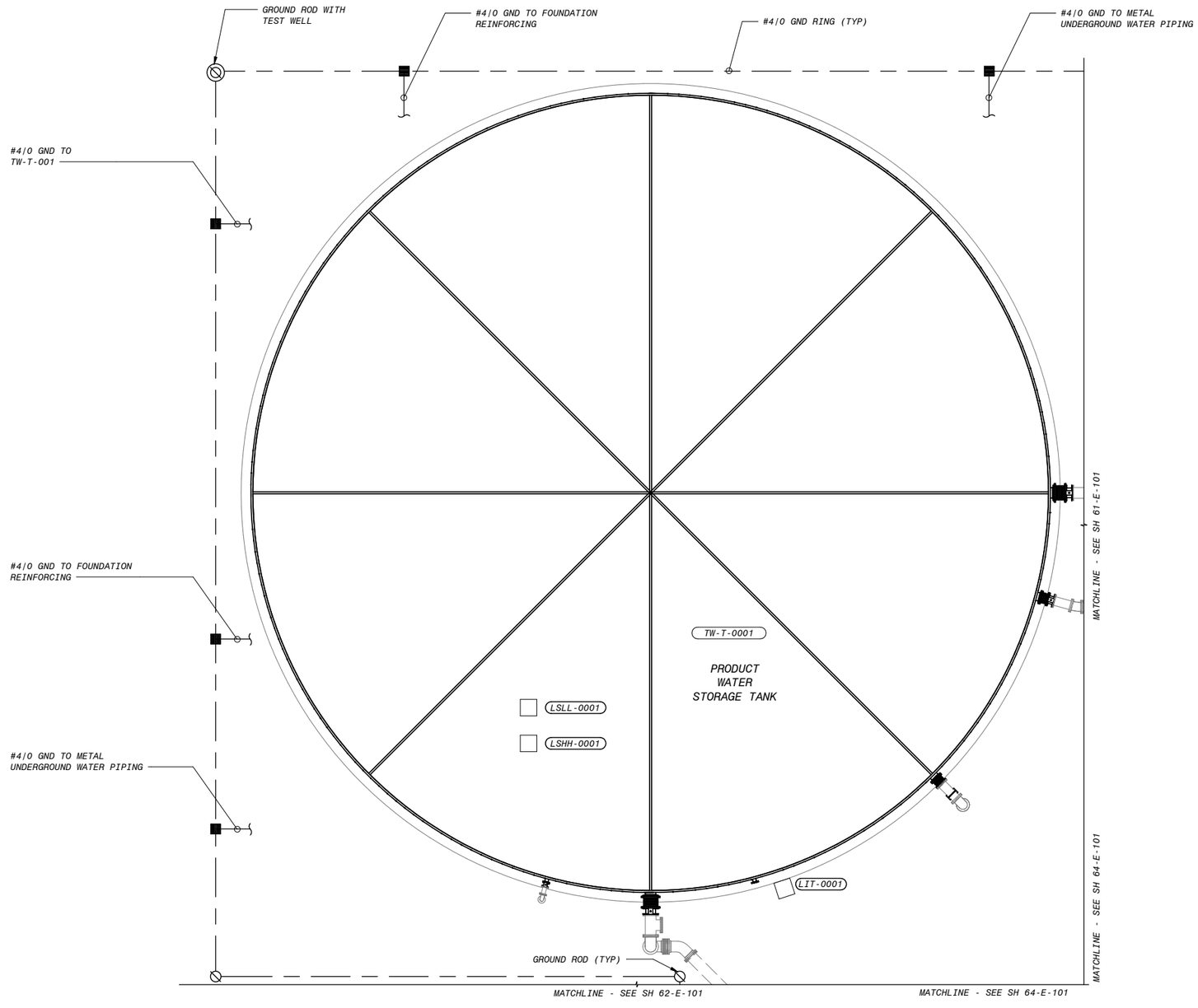


PRODUCT WATER AREA - PRODUCT WATER STORAGE TANK POWER AND GROUNDING PLAN

3/16" = 1'-0"

NOTES:

1. SEE DRAWING 00-E-001 AND 00-E-002 FOR ELECTRICAL LEGENDS, ABBREVIATIONS AND NOTES.
2. SEE DRAWING 10-E-100 FOR OVERALL ELECTRICAL SITE PLAN.

| NO. | BY | CHK | APP |
|---|---|---|---|
| B | JSL | MJK | EVB |

| DATE | REVISIONS AND RECORD OF USE |
|---|---|
| 7/30/2019 | 60% SUBMITTAL |

BLACK & VEATCH

JOINT VENTURE

FILANC

BLACK & VEATCH

CITY OF MORRO BAY
MORRO BAY WATER
RECLAMATION FACILITY (WRF)

PRODUCT WATER AREA
PRODUCT WATER STORAGE TANK
ELECTRICAL
POWER AND GROUNDING PLAN

DESIGNED: JSL
DETAILED: SBC
CHECKED:
APPROVED:
DATE:

0 1/2 1

IF THIS BAR DOES NOT MEASURE 1" THEN DRAWING IS NOT TO FULL SCALE

PROJECT NO.
400530

63-E-101
SHEET
OF

COASTAL DEVELOPMENT PERMIT PLANS

PLOTTED: 30-07-2019 17:15:47
D400530

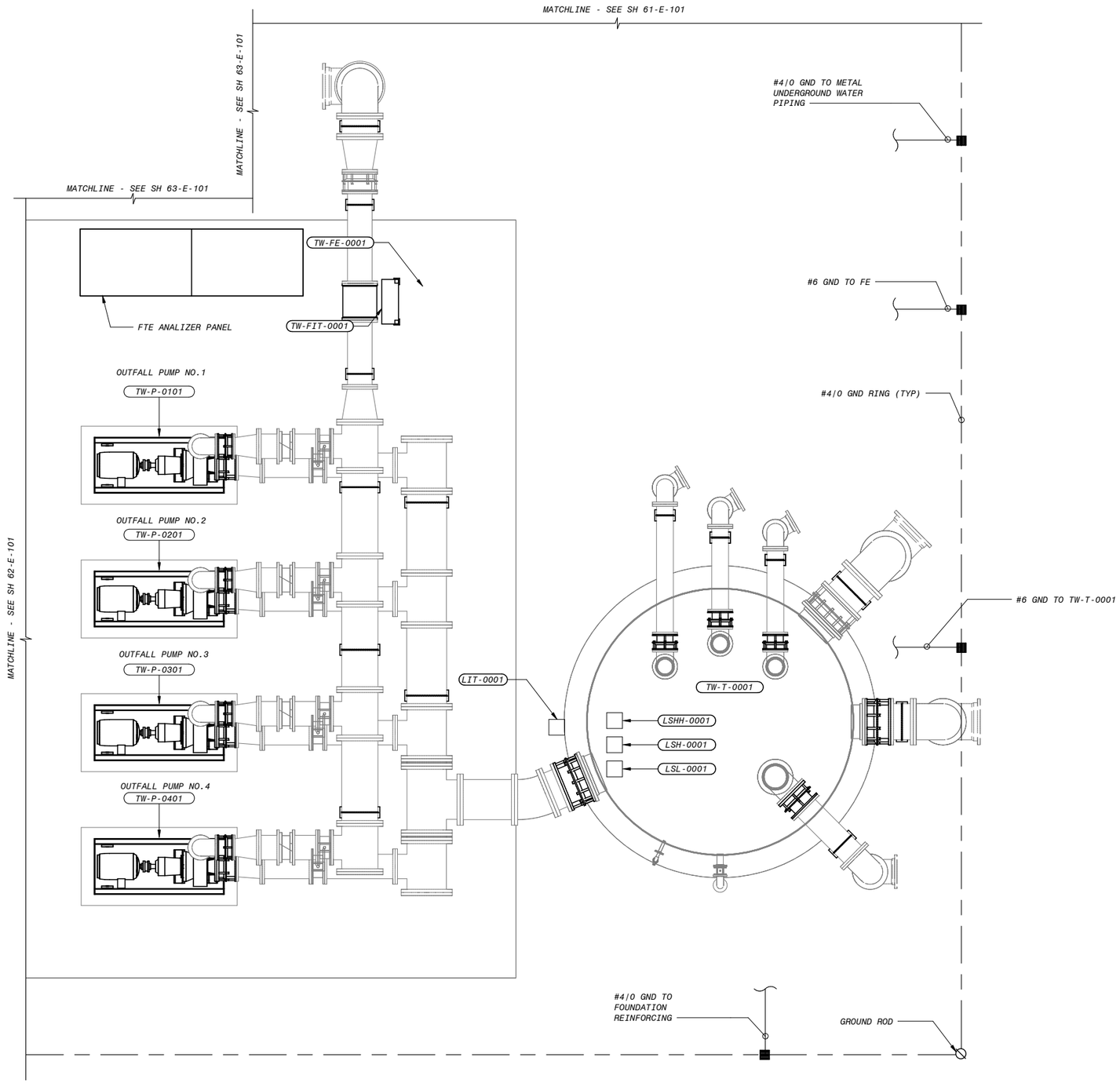


NOTES:

1. SEE DRAWING 00-E-001 AND 00-E-002 FOR ELECTRICAL LEGENDS, ABBREVIATIONS AND NOTES.
2. SEE DRAWING 10-E-100 FOR OVERALL ELECTRICAL SITE PLAN.

PRODUCT WATER AREA - OUTFALL PUMP STATION POWER AND GROUNDING PLAN

3/8" = 1'-0"

COASTAL DEVELOPMENT PERMIT PLANS

| NO. | BY | CHK | APP | REVISIONS AND RECORD OF USE | DATE |
|---|---|---|---|---|---|
| B | JSL | MJK | EVB | 60% SUBMITTAL | 7/30/2019 |

BLACK & VEATCH

JOINT VENTURE

FILANC

BLACK & VEATCH

CITY OF MORRO BAY
MORRO BAY WATER
RECLAMATION FACILITY (WRF)

PRODUCT WATER AREA - OUTFALL PUMP STATION
ELECTRICAL
POWER AND GROUNDING PLAN

DESIGNED: JSL
DETAILED: SBC
CHECKED:
APPROVED:
DATE:

0 1/2 1
IF THIS BAR DOES NOT MEASURE 1" THEN DRAWING IS NOT TO FULL SCALE

PROJECT NO.
400530

64-E-101
SHEET
OF

PLOTTED: 30-07-2019 17:15:48
D400530

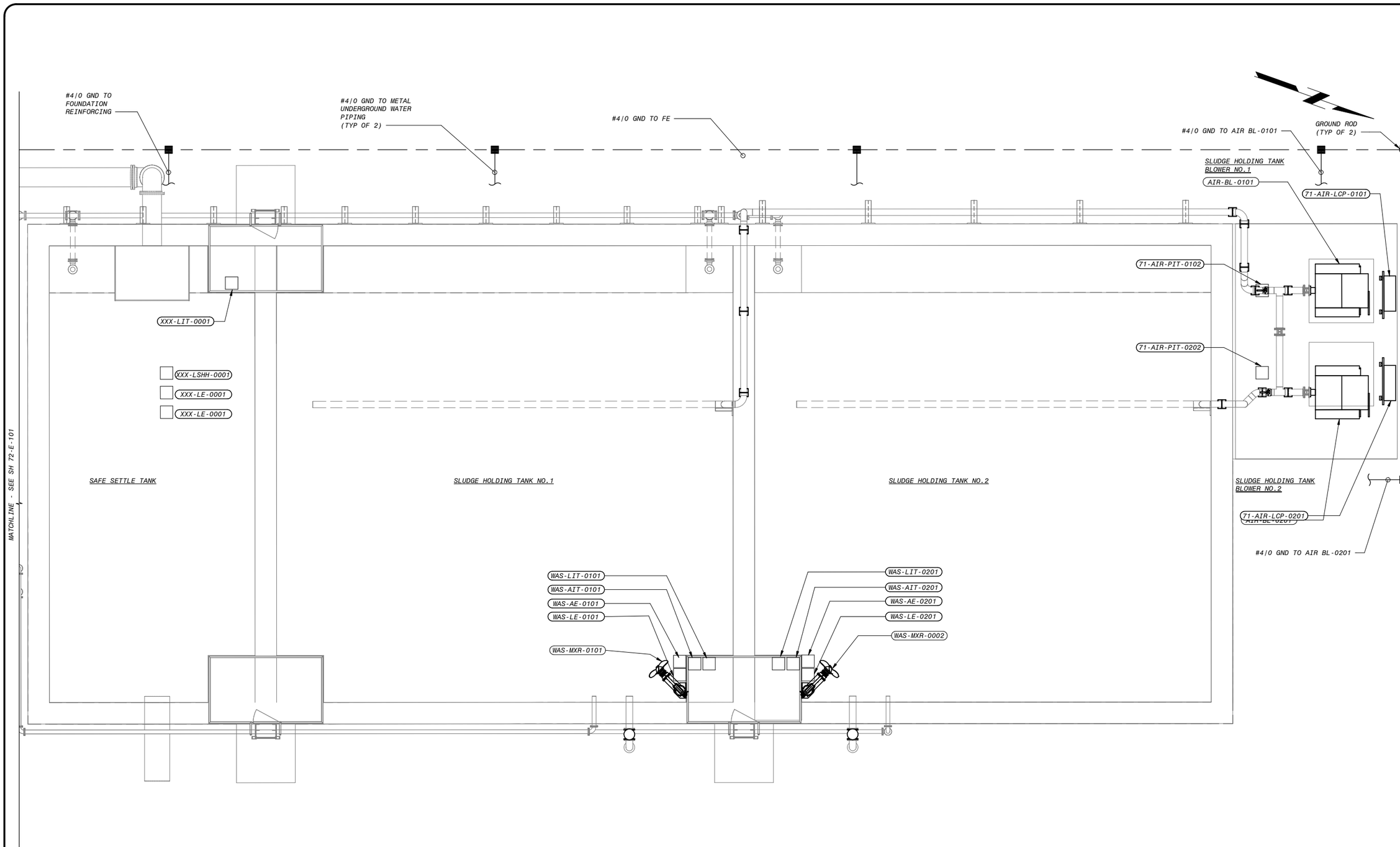


RESIDUALS AREA - SLUDGE HOLDING TANKS & SAFE SETTLE TANK AREA POWER AND GROUNDING PLAN

1/4" = 1'-0"

NOTES:

1. SEE DRAWING 00-E-001 AND 00-E-002 FOR ELECTRICAL LEGENDS, ABBREVIATIONS AND NOTES.
2. SEE DRAWING 10-E-100 FOR OVERALL ELECTRICAL SITE PLAN.

4' 2' 0' 4' 8'

1/4" = 1'-0"

COASTAL DEVELOPMENT PERMIT PLANS

| NO. | BY | CHK | APP | REVISIONS AND RECORD OF USE | DATE |
|---|---|---|---|---|---|
| B | JSL | MJK | EVB | 60% SUBMITTAL | 7/30/2019 |

BLACK & VEATCH JOINT VENTURE

FILANC BLACK & VEATCH

CITY OF MORRO BAY
MORRO BAY WRF
RECLAMATION FACILITY (WRF)

RESIDUALS AREA - SLUDGE HOLDING TANKS AND SAFE SETTLE TANK AREA ELECTRICAL POWER AND GROUNDING PLAN

DESIGNED: JSL
DETAILED: SBC
CHECKED:
APPROVED:
DATE:

0 1/2 1

IF THIS BAR DOES NOT MEASURE 1" THEN DRAWING IS NOT TO FULL SCALE

PROJECT NO. 400530

71-E-101

SHEET OF

PLOTTED: 30-07-2019 17:29:13

D400530

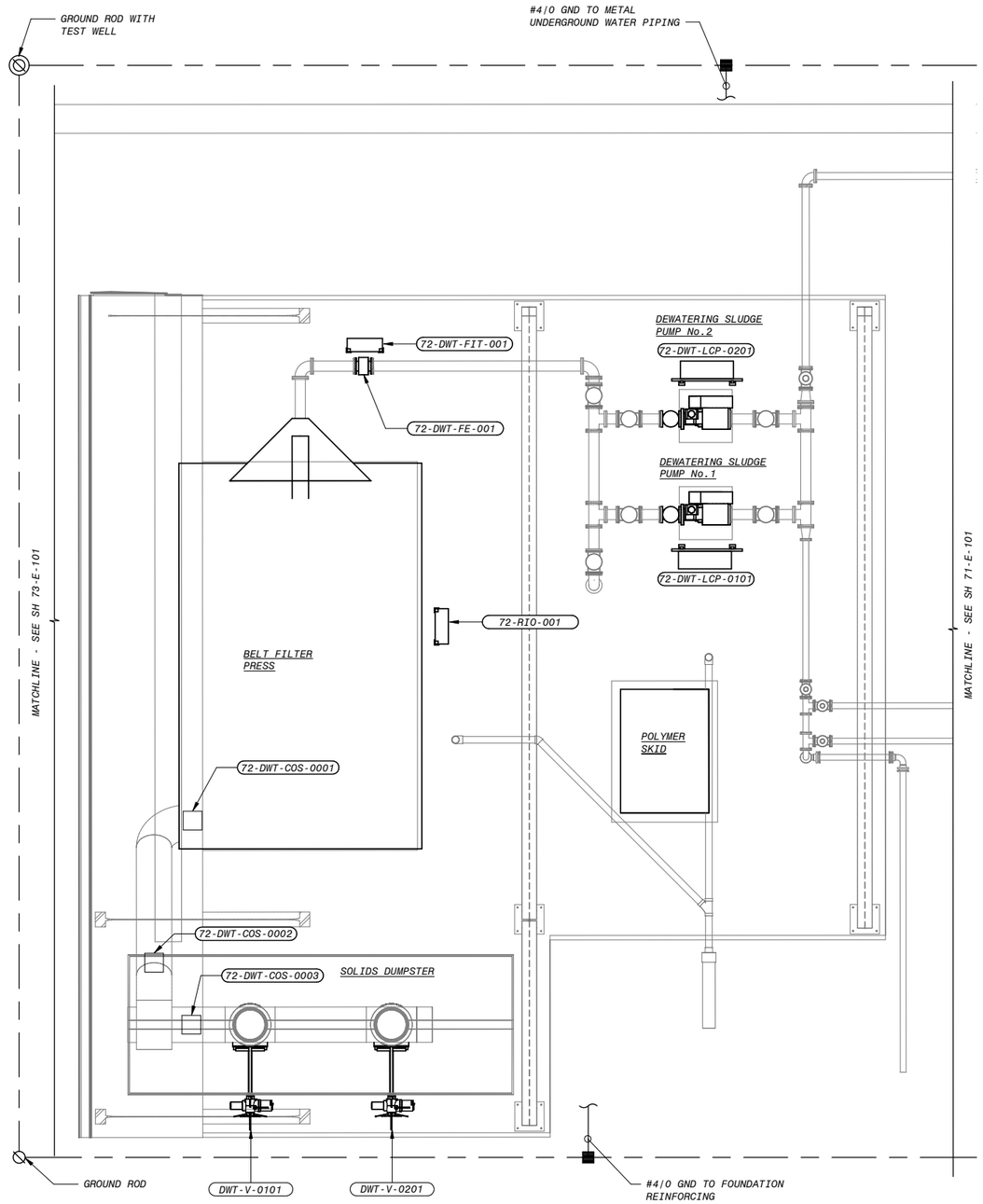


RESIDUALS AREA - DEWATERING FACILITY POWER AND GROUNDING PLAN

1/4" = 1'-0"

NOTES:

1. SEE DRAWING 00-E-001 AND 00-E-002 FOR ELECTRICAL LEGENDS, ABBREVIATIONS AND NOTES.
2. SEE DRAWING 10-E-100 FOR OVERALL ELECTRICAL SITE PLAN.

| NO. | BY | CHK | APP |
|---|---|---|---|
| B | JSL | MJK | EVB |

| DATE | REVISIONS AND RECORD OF USE |
|---|---|
| 7/30/2019 | 60% SUBMITTAL |

BLACK & VEATCH

JOINT VENTURE

FILANC

BLACK & VEATCH

CITY OF MORRO BAY
MORRO BAY WRF
RECLAMATION FACILITY (WRF)

RESIDUALS AREA - DEWATERING FACILITY
ELECTRICAL
POWER AND GROUNDING PLAN

DESIGNED: JSL
DETAILED: SBC
CHECKED:
APPROVED:
DATE:

0 1/2 1

IF THIS BAR DOES NOT MEASURE 1" THEN DRAWING IS NOT TO FULL SCALE

PROJECT NO.
400530

72-E-101
SHEET
OF

4' 2' 0' 4' 8'

1/4" = 1'-0"

COASTAL DEVELOPMENT PERMIT PLANS

PLOTTED: 30-07-2019 17:29:14

D400530

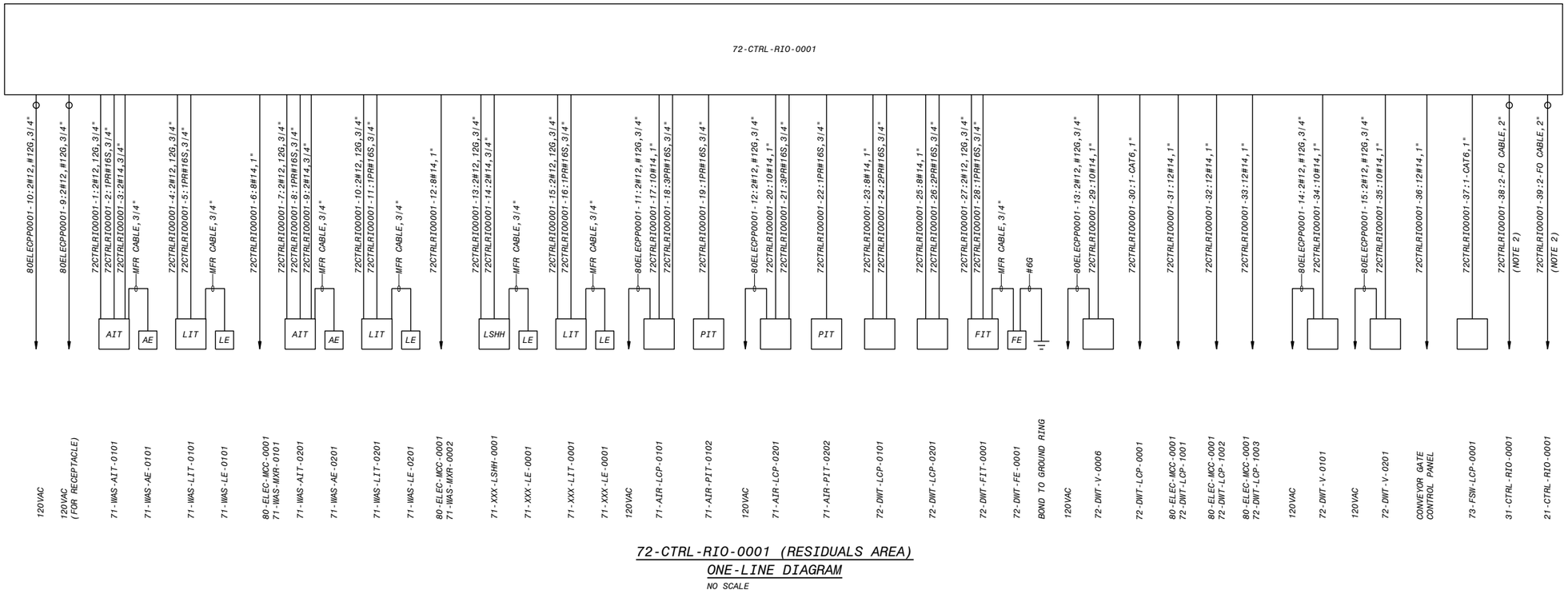


## 72-CTRL-RIO-0001 (RESIDUALS AREA) ONE-LINE DIAGRAM

NO SCALE

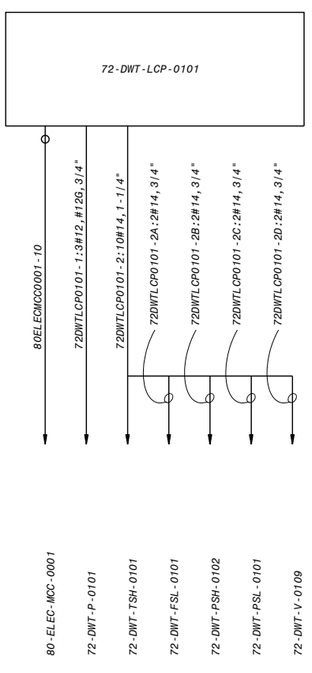


## 72-DWT-LCP-0101 (RESIDUALS AREA) ONE-LINE DIAGRAM

NO SCALE

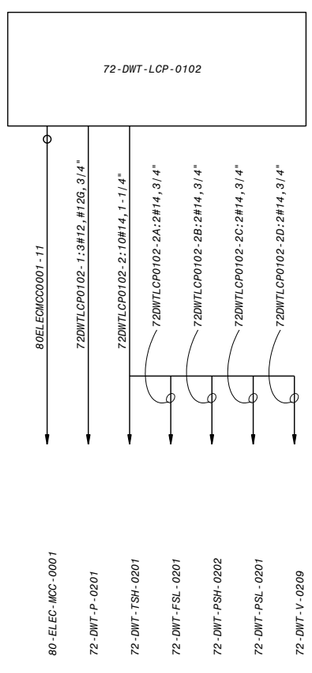


## 72-DWT-LCP-0201 (RESIDUALS AREA) ONE-LINE DIAGRAM

NO SCALE

NOTES:

1. SEE DRAWINGS 00-E-001 AND 00-E-002 FOR ELECTRICAL LEGEND, ABBREVIATIONS AND NOTES.
2. SEE DRAWING 00-T-701 FOR FIBRE OPTIC CABLE REQUIREMENT.

# COASTAL DEVELOPMENT PERMIT PLANS

| NO. | BY | CHK | APP |
|---|---|---|---|
| B | JSL | MJK | EVB |

| DATE | REVISIONS AND RECORD OF USE |
|---|---|
| 7/30/2019 | 60% SUBMITTAL |

BLACK & VEATCH

JOINT VENTURE

FILANC

BLACK & VEATCH

CITY OF MORRO BAY
MORRO BAY WRF
RECLAMATION FACILITY (WRF)

RESIDUALS AREA
ELECTRICAL
72-CTRL-RIO-0001 ONE-LINE DIAGRAM

DESIGNED: JSL
DETAILED: SBC
CHECKED:
APPROVED:
DATE:

0 1/2 1
IF THIS BAR DOES NOT MEASURE 1" THEN DRAWING IS NOT TO FULL SCALE

PROJECT NO. 400530

72-E-701
SHEET OF

F09000A
D400530
PLOTTED: 7/30/2019 8:33 AM FILE: C:\PWBatchPDF\Process\400530 - Morro Bay WRF\400530-72-E-701.dwg

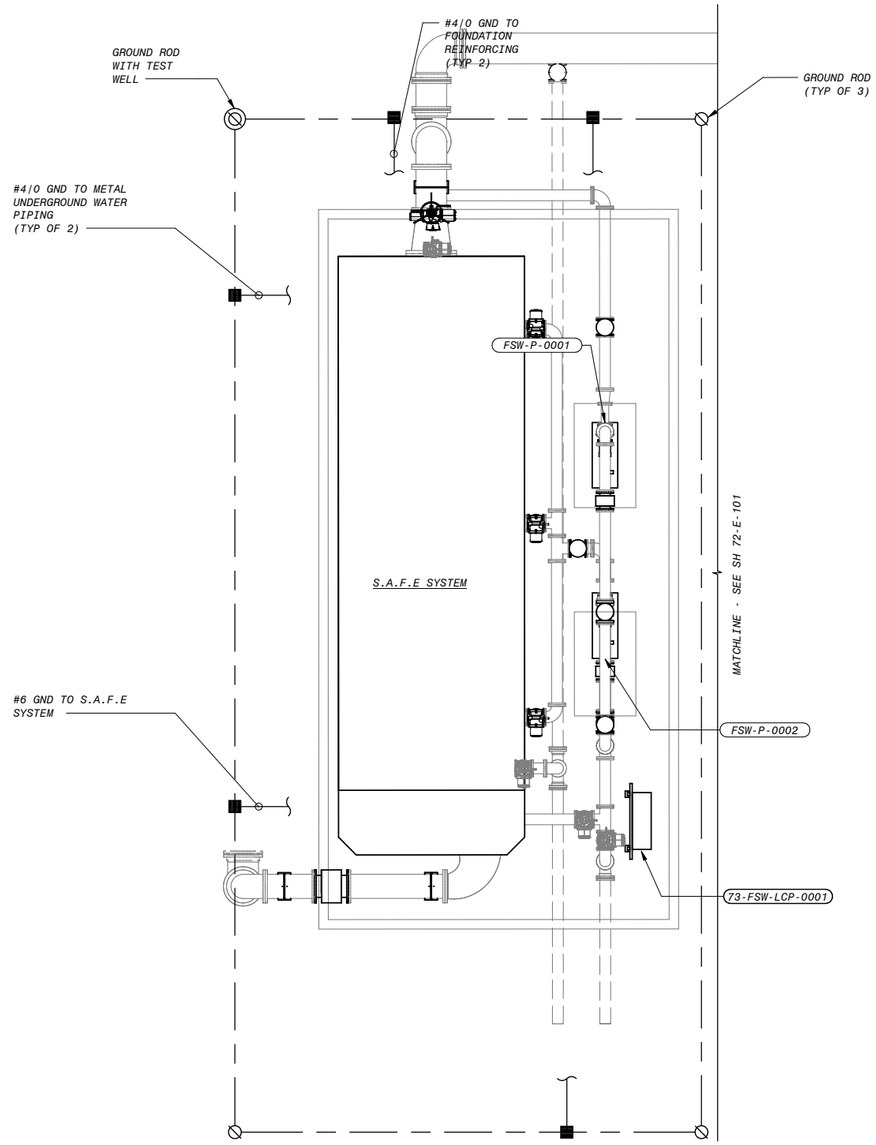


RESIDUALS AREA - SAFE FILTER POWER AND GROUNDING PLAN

1/4" = 1'-0"

NOTES:

1. SEE DRAWING 00-E-001 AND 00-E-002 FOR ELECTRICAL LEGENDS, ABBREVIATIONS AND NOTES.
2. SEE DRAWING 10-E-100 FOR OVERALL ELECTRICAL SITE PLAN.

4' 2' 0' 4' 8'

1/4" = 1'-0"

COASTAL DEVELOPMENT PERMIT PLANS

| DATE | REVISIONS AND RECORD OF USE | NO. | BY | CHK | APP |
|---|---|---|---|---|---|
| 7/30/2019 | 60% SUBMITTAL | B | JSL | MJK | EVB |

BLACK & VEATCH

JOINT VENTURE

FILANC

BLACK & VEATCH

CITY OF MORRO BAY
MORRO BAY WRF
RECLAMATION FACILITY (WRF)

RESIDUALS AREA - SAFE FILTER SYSTEM
ELECTRICAL
POWER AND GROUNDING PLAN

DESIGNED: JSL
DETAILED: SBC
CHECKED:
APPROVED:
DATE:

0 1/2 1

IF THIS BAR DOES NOT MEASURE 1" THEN DRAWING IS NOT TO FULL SCALE

PROJECT NO. 400530

73-E-101

SHEET OF

PLOTTED: 30-07-2019 17:29:15

D400530

NOTES:

1. SEE DRAWING 00-E-001 AND 00-E-002 FOR ELECTRICAL LEGENDS, ABBREVIATIONS AND NOTES.
2. SEE DRAWING 10-E-100 FOR OVERALL ELECTRICAL SITE PLAN.

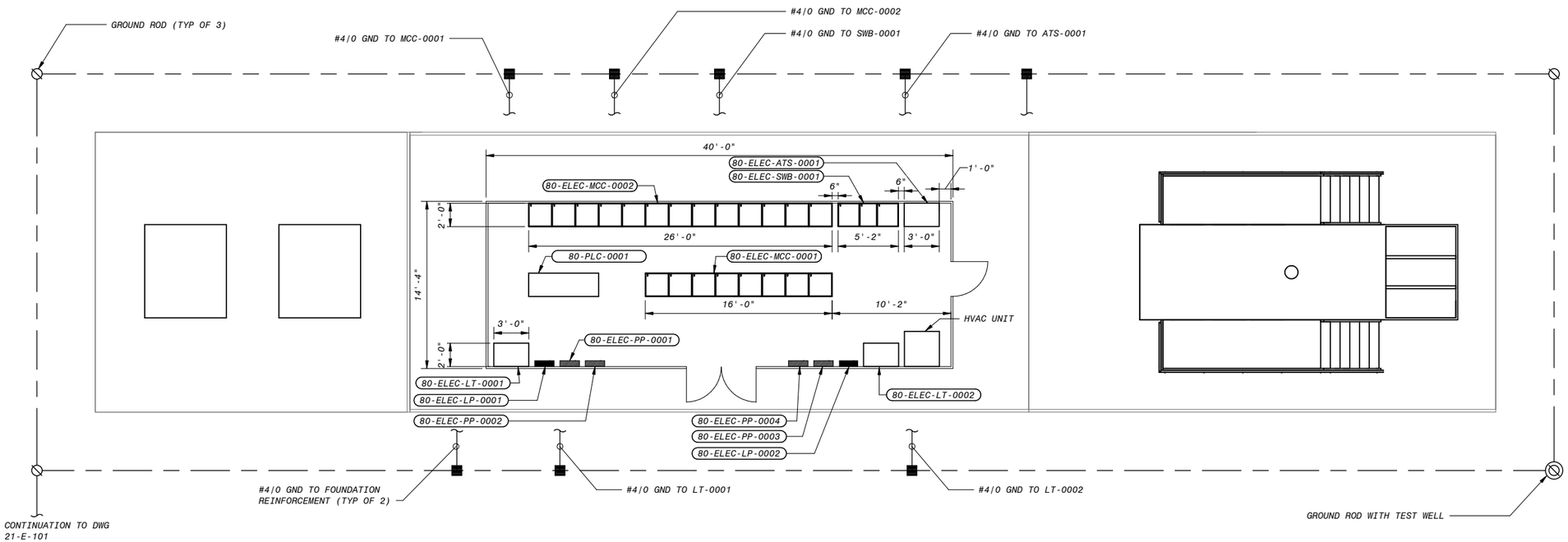


ELECTRICAL BIUILDING POWER AND GROUNDING PLAN

3/16" = 1'-0"

6" 4' 2' 0' 5' 10'

3/16" = 1'-0"

COASTAL DEVELOPMENT PERMIT PLANS

| NO. | BY | CHK | APP |
|---|---|---|---|
| B | JSL | MJK | EVB |

| DATE | REVISIONS AND RECORD OF USE |
|---|---|
| 7/30/2019 | 60% SUBMITTAL |

BLACK & VEATCH

JOINT VENTURE

FILANC

BLACK & VEATCH

CITY OF MORRO BAY
MORRO BAY WRF
RECLAMATION FACILITY (WRF)

ELECTRICAL BUILDING
ELECRICAL
POWER AND GROUNDING PLAN

DESIGNED: JSL
DETAILED: SBC
CHECKED:
APPROVED:
DATE:

0 1/2 1

IF THIS BAR DOES NOT MEASURE 1" THEN DRAWING IS NOT TO FULL SCALE

PROJECT NO.
400530

80-E-101
SHEET
OF

PLOTTED: 30-07-2019 17:24:44
D400530

| | | | PANEL BOARD: 80-ELEC-PP-0001 | | BUS: COPPER | | | | MAINS: 3P-150A MAIN BREAKER | | | | |
|---|---|---|---|---|---|---|---|---|---|---|---|---|---|
| PHASE | | | SERVICE: 120/208V, 3PH, 4W, S/N | | RATING: 150A | | | | LOCATION: 80 ELECTRICAL BUILDING | | | PHASE | |
| "A" | "B" | "C" | MOUNTING: SURFACE | | | | | | | | | "A" | "B" | "C" |
| V.A. | V.A. | V.A. | LOAD | P | BKR | CKT # | | BKR | P | LOAD | | V.A. | V.A. | V.A. |
| 250 | | | HEADWORK AREA RIO PANEL (21-CTRL-RIO-0001) | 1 | 20 | 1 | 2 | 20 | 1 | HEADWORK AREA RIO PANEL (21-RIO-CTRL-0001) (RECEPTACLE) | | 250 | | |
| | 250 | | 80-CTRL-PLC-0001 | 1 | 20 | 3 | 4 | 20 | 1 | 80-CTRL-PLC-0001 (RECEPTACLE) | | | 250 | |
| | | 0 | SPARE | 1 | 20 | 5 | 6 | 20 | 1 | SPARE | | | | 0 |
| 500 | | | 22-SCR-SAMP-0010 | 1 | 20 | 7 | 8 | 20 | 1 | SPARE | | 0 | | |
| | 250 | | 72-CTRL-RIO-0001 (RECEPTACLE) | 1 | 20 | 9 | 10 | 20 | 1 | 72-CTRL-RIO-0001 | | | 250 | |
| | | 250 | 71-AIR-LCP-0101 | 1 | 20 | 11 | 12 | 20 | 1 | 71-AIR-LCP-0201 | | | | 250 |
| 200 | | | 72-DWT-V-0006 | 1 | 20 | 13 | 14 | 20 | 1 | 72-DWT-V-0101 | | 200 | | |
| | 200 | | 72-DWT-V-0201 | 1 | 20 | 15 | 16 | 20 | 1 | SPARE | | | 0 | |
| | | 0 | SPARE | 1 | 20 | 17 | 18 | 20 | 1 | SPARE | | | | 0 |
| 0 | | | SPARE | 1 | 20 | 19 | 20 | 20 | 1 | SPARE | | 0 | | |
| | 0 | | SPARE | 1 | 20 | 21 | 22 | 20 | 1 | SPARE | | | 0 | |
| | | 0 | SPARE | 1 | 20 | 23 | 24 | 20 | 1 | SPARE | | | | 0 |
| 0 | | | SPARE | 1 | 20 | 25 | 26 | 20 | 1 | SPARE | | 0 | | |
| | 0 | | SPARE | 1 | 20 | 27 | 28 | 20 | 1 | SPARE | | | 0 | |
| | | 0 | SPARE | 1 | 20 | 29 | 30 | 20 | 1 | SPARE | | | | 0 |
| 0 | | | SPARE | 1 | 20 | 31 | 32 | 20 | 1 | SPARE | | 0 | | |
| | 0 | | SPARE | 1 | 20 | 33 | 34 | 20 | 1 | SPARE | | | 0 | |
| | | 0 | SPARE | 1 | 20 | 35 | 36 | 20 | 1 | SPARE | | | | 0 |
| 0 | | | SPARE | 1 | 20 | 37 | 38 | 20 | 1 | SPARE | | 0 | | |
| | 0 | | SPARE | 1 | 20 | 39 | 40 | 20 | 1 | SPARE | | | 0 | |
| | | 0 | SPARE | 1 | 20 | 41 | 42 | 20 | 1 | SPARE | | | | 0 |
| 950 | | | TOTAL "A" | | | 1400 | | | | TOTAL "A" | | 450 | | |
| | 700 | | TOTAL "B" | | | 1200 | | | | TOTAL "B" | | | 500 | |
| | | 250 | TOTAL "C" | | | 500 | | | | TOTAL "C" | | | | 250 |
| | | | TOTAL | | | 3100 | | | | | | | | |

ELECTRICAL BUILDING 80-ELEC-PP-0001
POWER PANELS SCHEDULE
NO SCALE

| | | | PANEL BOARD: 80-ELEC-PP-0002 | | BUS: COPPER | | | | MAINS: 3P-200A MAIN BREAKER | | | | |
|---|---|---|---|---|---|---|---|---|---|---|---|---|---|
| PHASE | | | SERVICE: 480 3PH, 4W, S/N | | RATING: 200A | | | | LOCATION: 80 ELECTRICAL BUILDING | | | PHASE | |
| "A" | "B" | "C" | MOUNTING: SURFACE | | | | | | | | | "A" | "B" | "C" |
| V.A. | V.A. | V.A. | LOAD | P | BKR | CKT # | | BKR | P | LOAD | | V.A. | V.A. | V.A. |
| 345 | 345 | 345 | PHP-101 | 3 | 15 | 1 | 2 | 15 | 3 | PHP-104 | | 345 | 345 | 345 |
| 345 | 345 | 345 | PHP-102 | 3 | 15 | 3 | 4 | 15 | 2 | PHP-107 | | 345 | 345 | 345 |
| 345 | 345 | 345 | PHP-103 | 3 | 15 | 5 | 6 | 15 | 3 | HVAC 1 (Assumed) | | 345 | 345 | 345 |
| 345 | 345 | 345 | 22-SCR-V-1002 | 3 | 15 | 7 | 8 | 15 | 3 | SPARE | | 0 | 0 | 0 |
| 0 | 0 | 0 | SPARE | 3 | 15 | 9 | 10 | 15 | 3 | SPARE | | 0 | 0 | 0 |
| 0 | 0 | 0 | SPARE | 3 | 15 | 11 | 12 | 15 | 3 | SPARE | | 0 | 0 | 0 |
| 0 | 0 | 0 | SPARE | 3 | 15 | 13 | 14 | 15 | 3 | SPARE | | 0 | 0 | 0 |
| 0 | 0 | 0 | SPARE | 3 | 15 | 15 | 16 | 15 | 3 | SPARE | | 0 | 0 | 0 |
| 0 | 0 | 0 | SPARE | 3 | 15 | 17 | 18 | 15 | 3 | SPARE | | 0 | 0 | 0 |
| 0 | 0 | 0 | SPARE | 3 | 15 | 19 | 20 | 15 | 3 | SPARE | | 0 | 0 | 0 |
| 0 | 0 | 0 | SPARE | 3 | 15 | 21 | 22 | 15 | 3 | SPARE | | 0 | 0 | 0 |
| 0 | 0 | 0 | SPARE | 3 | 15 | 23 | 24 | 30 | 3 | SPARE | | 0 | 0 | 0 |
| 0 | 0 | 0 | SPARE | 3 | 30 | 25 | 26 | 30 | 3 | SPARE | | 0 | 0 | 0 |
| 0 | 0 | 0 | SPARE | 3 | 30 | 27 | 28 | 15 | 3 | SPARE | | 0 | 0 | 0 |
| 1381 | | | TOTAL "A" | | | 2418 | | | | TOTAL "A" | | 1036 | | |
| | 1381 | | TOTAL "B" | | | 2418 | | | | TOTAL "B" | | | 1036 | |
| | | 1381 | TOTAL "C" | | | 2418 | | | | TOTAL "C" | | | | 1036 |
| | | | TOTAL | | | 7253 | | | | | | | | |

ELECTRICAL UV BUILDING 80-ELEC-PP-0002
POWER PANELS SCHEDULE
NO SCALE

| | | | PANEL BOARD: 80-ELEC-PP-0003 | | BUS: COPPER | | | | MAINS: 3P-150A MAIN BREAKER | | | | |
|---|---|---|---|---|---|---|---|---|---|---|---|---|---|
| PHASE | | | SERVICE: 120/208V, 3PH, 4W, S/N | | RATING: 150A | | | | LOCATION: 80 ELECTRICAL BUILDING | | | PHASE | |
| "A" | "B" | "C" | MOUNTING: SURFACE | | | | | | | | | "A" | "B" | "C" |
| V.A. | V.A. | V.A. | LOAD | P | BKR | CKT # | | BKR | P | LOAD | | V.A. | V.A. | V.A. |
| 500 | | | 31-CTRL-RIO-0001, 31-CTRL-RIO-0001 (Receptacle) | 1 | 20 | 1 | 2 | 20 | 1 | SPARE | | 0 | | |
| | 200 | | 31-BNR-AIT-1003 | 1 | 20 | 3 | 4 | 20 | 1 | SPARE | | | 0 | |
| | | 0 | SPARE | 1 | 20 | 5 | 6 | 20 | 1 | SPARE | | | | 0 |
| 0 | | | SPARE | 1 | 20 | 7 | 8 | 20 | 1 | SPARE | | 0 | | |
| | 200 | | 31-BNR-AIT-2003 | 1 | 20 | 9 | 10 | 20 | 1 | SPARE | | | 0 | |
| | | 100 | 31-RCW-V-0002 | 1 | 20 | 11 | 12 | 20 | 1 | 31-AER-LCP-0101 | | | | 250 |
| 250 | | | 31-AER-LCP-0201 | 1 | 20 | 13 | 14 | 20 | 1 | 31-AER-LCP-0301 | | 250 | | |
| | 200 | | 32-CA-V-1001 | 1 | 20 | 15 | 16 | 20 | 1 | 32-NOCL-V-1001 | | | 200 | |
| | | 0 | SPARE | 1 | 20 | 17 | 18 | 20 | 1 | 32-CA-V-2001 | | | | 200 |
| 200 | | | 32-NOCL-V-2001 | 1 | 20 | 19 | 20 | 20 | 1 | SPARE | | 0 | | |
| | 500 | | 32-MBR-PLC-0001, 32-MBR-PLC-0001 (Receptacle) | 1 | 20 | 21 | 22 | 20 | 1 | 32-AIR-V-1001, 32-AIR-V-2001 | | | 400 | |
| | | 400 | 32-IA-V-1001, 32-IA-V-2002 | 1 | 20 | 23 | 24 | 20 | 1 | 32-MEM-V-2014 | | | | 200 |
| 200 | | | 32-MEM-V-1014 | 1 | 20 | 25 | 26 | 20 | 1 | 32-MEM-AIT-0001 | | 200 | | |
| | 0 | | SPARE | 1 | 20 | 27 | 28 | 20 | 1 | SPARE | | | 0 | |
| | | 0 | SPARE | 1 | 20 | 29 | 30 | 20 | 1 | SPARE | | | | 0 |
| 0 | | | SPARE | 1 | 20 | 31 | 32 | 20 | 1 | SPARE | | 0 | | |
| | 0 | | SPARE | 1 | 20 | 33 | 34 | 20 | 1 | SPARE | | | 0 | |
| | | 0 | SPARE | 1 | 20 | 35 | 36 | 20 | 1 | SPARE | | | | 0 |
| 0 | | | SPARE | 1 | 20 | 37 | 38 | 20 | 1 | SPARE | | 0 | | |
| | 0 | | SPARE | 1 | 20 | 39 | 40 | 20 | 1 | SPARE | | | 0 | |
| | | 0 | SPARE | 1 | 20 | 41 | 42 | 20 | 1 | SPARE | | | | 0 |
| 1150 | | | TOTAL "A" | | | 1600 | | | | TOTAL "A" | | 450 | | |
| | 1100 | | TOTAL "B" | | | 1700 | | | | TOTAL "B" | | | 600 | |
| | | 500 | TOTAL "C" | | | 1150 | | | | TOTAL "C" | | | | 650 |
| | | | TOTAL | | | 4450 | | | | | | | | |

ELECTRICAL BUILDING 80-ELEC-PP-0003
POWER PANELS SCHEDULE
NO SCALE

| | | | PANEL BOARD: 80-ELEC-PP-0004 | | BUS: COPPER | | | | MAINS: 3P-200A MAIN BREAKER | | | | |
|---|---|---|---|---|---|---|---|---|---|---|---|---|---|
| PHASE | | | SERVICE: 480 3PH, 4W, S/N | | RATING: 200A | | | | LOCATION: 80 ELECTRICAL BUILDING | | | PHASE | |
| "A" | "B" | "C" | MOUNTING: SURFACE | | | | | | | | | "A" | "B" | "C" |
| V.A. | V.A. | V.A. | LOAD | P | BKR | CKT # | | BKR | P | LOAD | | V.A. | V.A. | V.A. |
| 345 | 345 | 345 | PHP-101 | 3 | 15 | 1 | 2 | 15 | 3 | PHP-104 | | 345 | 345 | 345 |
| 345 | 345 | 345 | PHP-102 | 3 | 15 | 3 | 4 | 15 | 2 | PHP-107 | | 345 | 345 | 345 |
| 345 | 345 | 345 | PHP-103 | 3 | 15 | 5 | 6 | 15 | 3 | HVAC 1 (Assumed) | | 345 | 345 | 345 |
| 345 | 345 | 345 | 32-MEM-V-1005 | 3 | 15 | 7 | 8 | 15 | 3 | 32-MEM-V-2005 | | 345 | 345 | 345 |
| 345 | 345 | 345 | 31-AER-V-1101 | 3 | 15 | 9 | 10 | 15 | 3 | 31-AER-V-1201 | | 345 | 345 | 345 |
| 345 | 345 | 345 | 31-WAS-V-1001 | 3 | 15 | 11 | 12 | 15 | 3 | 31-BNR-V-1001 | | 345 | 345 | 345 |
| 345 | 345 | 345 | 31-AER-V-2101 | 3 | 15 | 13 | 14 | 15 | 3 | 31-AER-V-2201 | | 345 | 345 | 345 |
| 345 | 345 | 345 | 31-WAS-V-2001 | 3 | 15 | 15 | 16 | 15 | 3 | 31-WAS-V-2001 | | 345 | 345 | 345 |
| 345 | 345 | 345 | 32-MEM-V-1001 | 3 | 15 | 17 | 18 | 15 | 3 | 32-RAS-V-1001 | | 345 | 345 | 345 |
| 345 | 345 | 345 | 32-MEM-V-2001 | 3 | 15 | 19 | 20 | 15 | 3 | 32-RAS-V-2001 | | 345 | 345 | 345 |
| 0 | 0 | 0 | SPARE | 3 | 15 | 21 | 22 | 15 | 3 | SPARE | | 0 | 0 | 0 |
| 0 | 0 | 0 | SPARE | 3 | 15 | 23 | 24 | 30 | 3 | SPARE | | 0 | 0 | 0 |
| 0 | 0 | 0 | SPARE | 3 | 30 | 25 | 26 | 30 | 3 | SPARE | | 0 | 0 | 0 |
| 0 | 0 | 0 | SPARE | 3 | 30 | 27 | 28 | 15 | 3 | SPARE | | 0 | 0 | 0 |
| 3454 | | | TOTAL "A" | | | 6907 | | | | TOTAL "A" | | 3454 | | |
| | 3454 | | TOTAL "B" | | | 6907 | | | | TOTAL "B" | | | 3454 | |
| | | 3454 | TOTAL "C" | | | 6907 | | | | TOTAL "C" | | | | 3454 |
| | | | TOTAL | | | 20722 | | | | | | | | |

ELECTRICAL UV BUILDING 80-ELEC-PP-0004
POWER PANELS SCHEDULE
NO SCALE

NOTES:

1. SEE DRAWINGS 00-E-001 AND 00-E-002 FOR ELECTRICAL LEGEND, ABBREVIATIONS AND NOTES.

COASTAL DEVELOPMENT PERMIT PLANS

| NO. | BY | CHK | APD |
|---|---|---|---|
| B | JSL | MJK | EVB |

REVISIONS AND RECORD OF USE

| DATE | |
|---|---|
| 7/30/2019 | 60% SUBMITTAL |

BLACK & VEATCH
JOINT VENTURE
FILANC
BLACK & VEATCH

CITY OF MORRO BAY
MORRO BAY WRF
RECLAMATION FACILITY (WRF)

ELECTRICAL BUILDING
ELECTRICAL
POWER PANELS SCHEDULE

DESIGNED: JSL
DETAILED: SBC
CHECKED:
APPROVED:
DATE:

0 1/2 1
IF THIS BAR DOES NOT MEASURE 1" THEN DRAWING IS NOT TO FULL SCALE

PROJECT NO.
400530

80-E-601
SHEET
OF

F09000A
D400530
PLOTTED: 7/30/2019 1:55 AM FILE: C:\PWBatchPDF\Process\400530 - Morro Bay WRF\400530-80-E-601.dwg

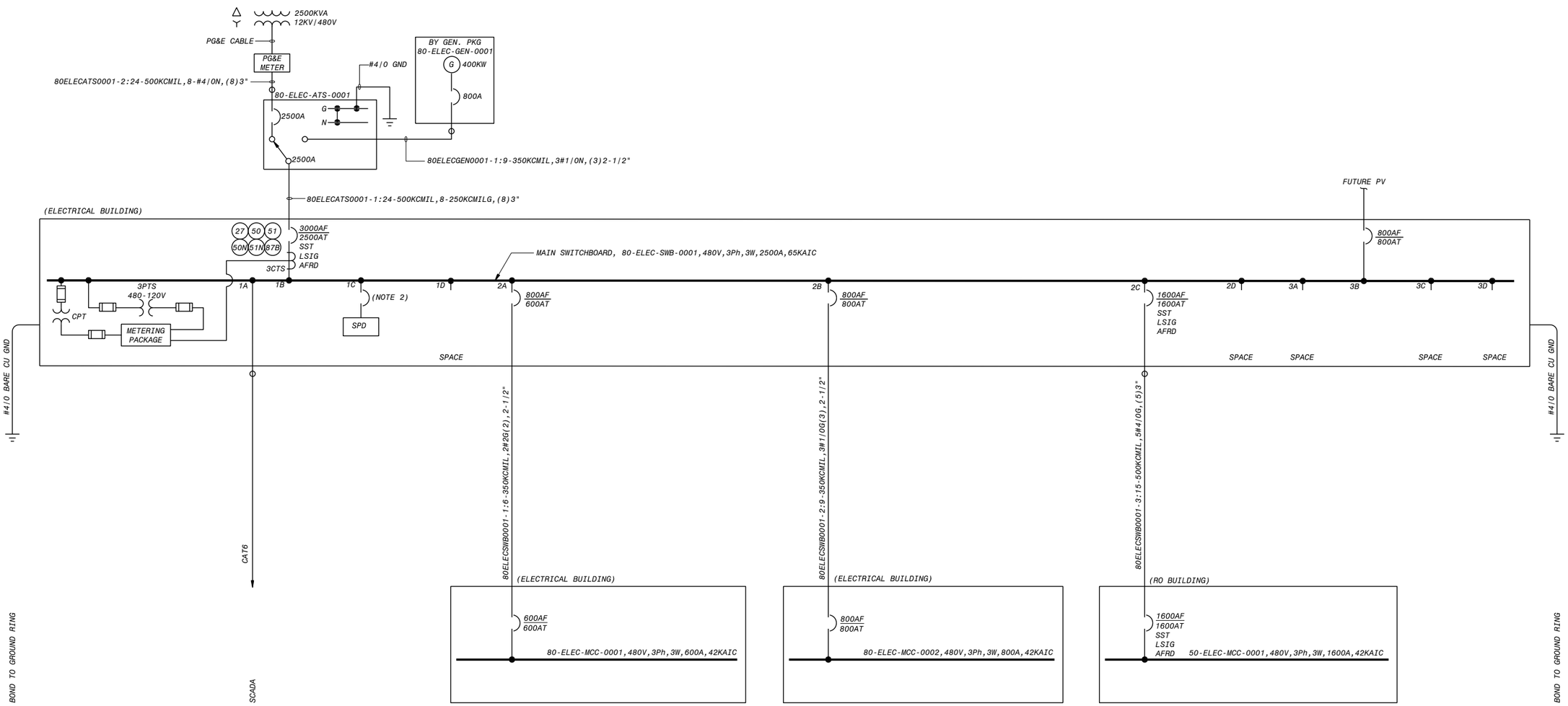


## 80-ELEC-SWB-0001 (ELECTRICAL BUILDING) ONE-LINE DIAGRAM

NO SCALE

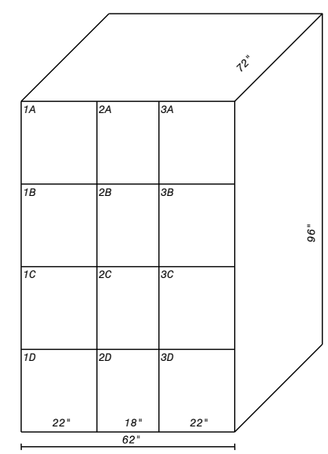


## 80-ELEC-SWB-0001 (ELECTRICAL BUILDING) FRONT ELEVATION

NO SCALE

**NOTES:**

1. SEE DRAWINGS 00-E-001 AND 00-E-002 FOR ELECTRICAL LEGEND, ABBREVIATIONS AND NOTES.
2. CIRCUIT BREAKER SIZE SHALL BE RECOMMENDED BY SWITCHBOARD SUPPLIER.

# COASTAL DEVELOPMENT PERMIT PLANS

| NO. | BY | CHK | APP |
|---|---|---|---|
| B | JSL | MJK | EVB |

| DATE | REVISIONS AND RECORD OF USE |
|---|---|
| 7/30/2019 | 60% SUBMITTAL |

BLACK & VEATCH

JOINT VENTURE

FILANC

BLACK & VEATCH

CITY OF MORRO BAY
MORRO BAY WRF
RECLAMATION FACILITY (WRF)

ELECTRICAL BUILDING
ELECTRICAL
80-ELEC-SWB-0001 ONE-LINE DIAGRAM

DESIGNED: JSL
DETAILED: SBC
CHECKED:
APPROVED:
DATE:

0 1/2 1
IF THIS BAR DOES NOT MEASURE 1" THEN DRAWING IS NOT TO FULL SCALE

PROJECT NO.
400530

80-E-701
SHEET
OF

F09000A
D400530
PLOTTED: 7/30/2019 8:33 AM FILE: C:\PWBatchPDF\Process\400530 - Morro Bay WRF\400530-80-E-701.dwg

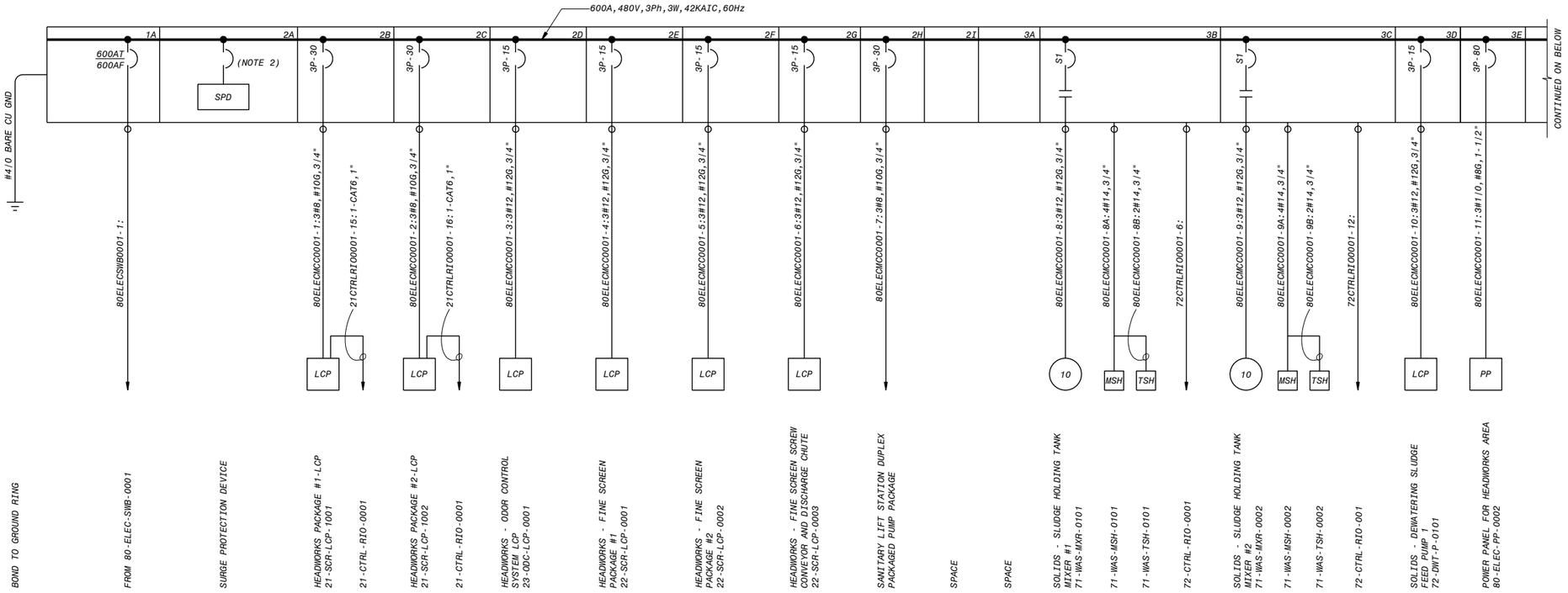


80-ELEC-MCC-0001 (ELECTRICAL BUILDING)
ONE-LINE DIAGRAM
NO SCALE

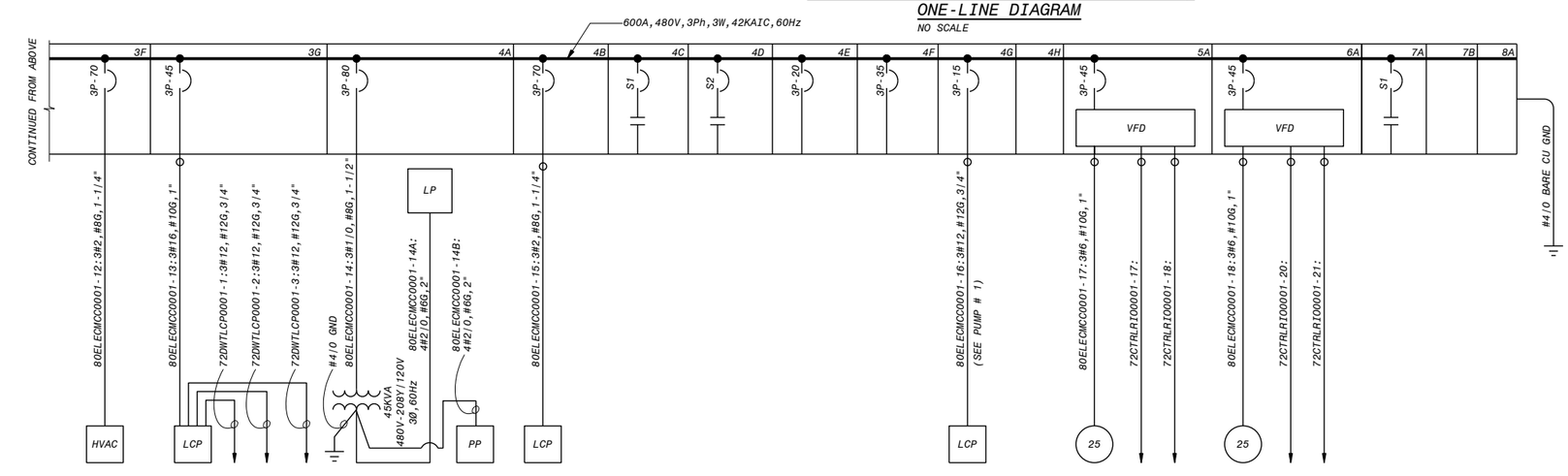


80-ELEC-MCC-0001 (ELECTRICAL BUILDING)
ONE-LINE DIAGRAM
NO SCALE

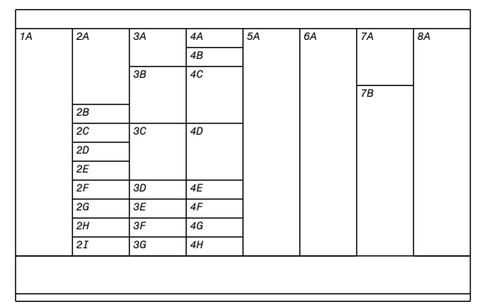


80-ELEC-MCC-0001 (ELECTRICAL BUILDING)
FRONT ELEVATION
NO SCALE

NOTES:

1. SEE DRAWINGS 00-E-001 AND 00-E-002 FOR ELECTRICAL LEGEND, ABBREVIATIONS AND NOTES.
2. CIRCUIT BREAKER SIZE SHALL BE RECOMMENDED BY MCC SUPPLIER.

COASTAL DEVELOPMENT PERMIT PLANS

| NO. | BY | CHK | APP |
|---|---|---|---|
| B | JSL | MJK | EVB |

| DATE | REVISIONS AND RECORD OF USE |
|---|---|
| 7/30/2019 | 60% SUBMITTAL |

BLACK & VEATCH

JOINT VENTURE

FILANC

BLACK & VEATCH

CITY OF MORRO BAY
MORRO BAY WRF
RECLAMATION FACILITY (WRF)

ELECTRICAL BUILDING
ELECTRICAL
80-ELEC-MCC-0001 ONE-LINE DIAGRAM

DESIGNED: JSL
DETAILED: SBC
CHECKED:
APPROVED:
DATE:

0 1/2 1
IF THIS BAR DOES NOT MEASURE 1" THEN DRAWING IS NOT TO FULL SCALE

PROJECT NO.
400530

80-E-702
SHEET
OF

F09000A
D400530
PLOTTED: 7/30/2019 8:33 AM FILE: C:\PWBatchPDF\Process\400530 - Morro Bay WRF\400530-80-E-702.dwg

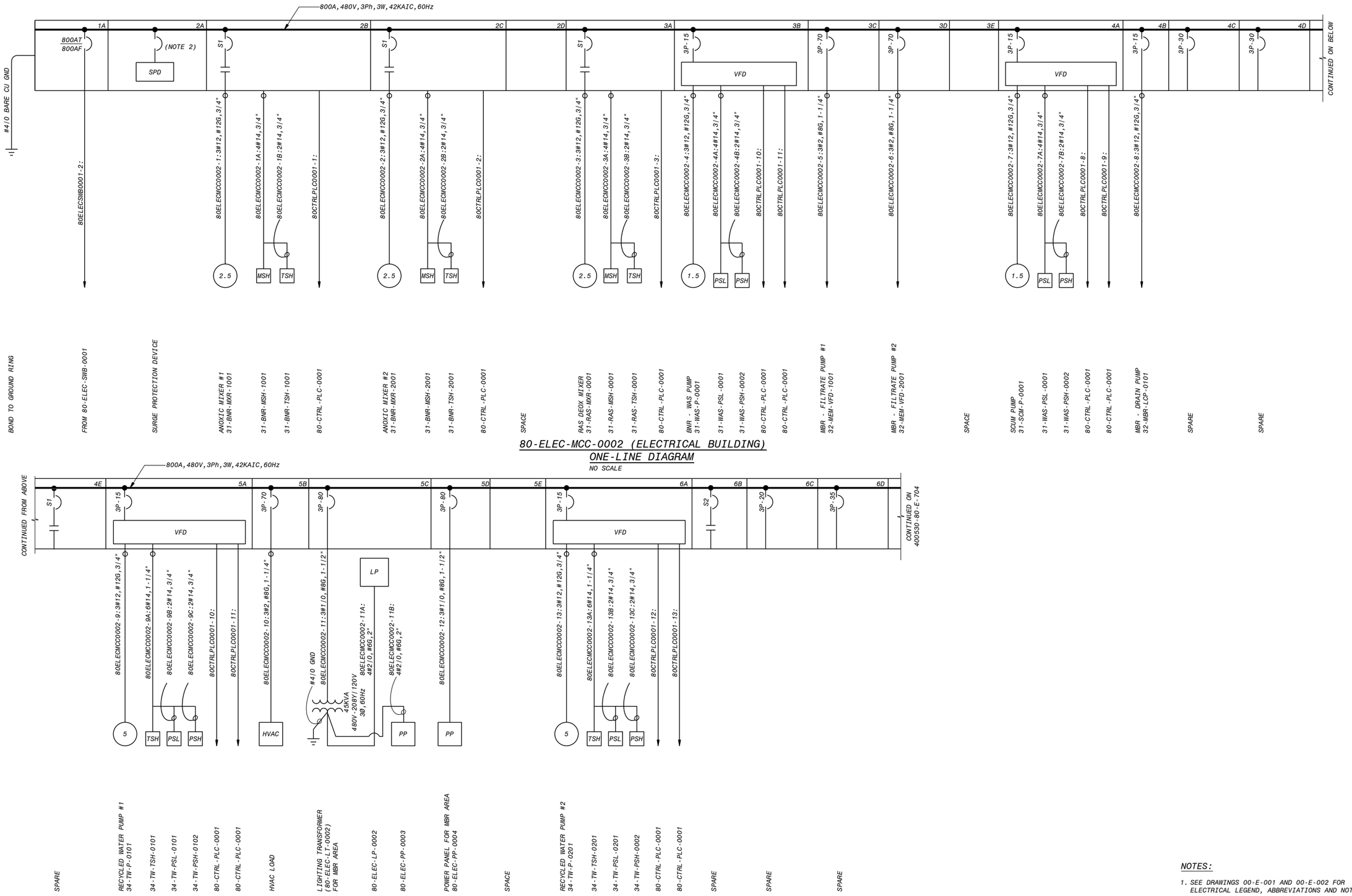


## 80-ELEC-MCC-0002 (ELECTRICAL BUILDING)
## ONE-LINE DIAGRAM
NO SCALE




## 80-ELEC-MCC-0002 (ELECTRICAL BUILDING)
## ONE-LINE DIAGRAM
NO SCALE

NOTES:

1. SEE DRAWINGS 00-E-001 AND 00-E-002 FOR ELECTRICAL LEGEND, ABBREVIATIONS AND NOTES.
2. CIRCUIT BREAKER SIZE SHALL BE RECOMMENDED BY MCC SUPPLIER.

COASTAL DEVELOPMENT PERMIT PLANS

| NO. | BY | CHK | APP |
|---|---|---|---|
| B | JSL | MJK | EVB |

| DATE | REVISIONS AND RECORD OF USE |
|---|---|
| 7/30/2019 | 60% SUBMITTAL |

BLACK & VEATCH
JOINT VENTURE
FILANC
BLACK & VEATCH

CITY OF MORRO BAY
MORRO BAY WRF
RECLAMATION FACILITY (WRF)

ELECTRICAL BUILDING
ELECTRICAL
80-ELEC-MCC-0002 ONE-LINE DIAGRAM

DESIGNED: JSL
DETAILED: SBC
CHECKED:
APPROVED:
DATE:

0 1/2 1
IF THIS BAR DOES NOT MEASURE 1" THEN DRAWING IS NOT TO FULL SCALE

PROJECT NO.
400530

80-E-703
SHEET
1 OF 2

F090000A
D400530
PLOTTED: 7/30/2019 8:34 AM FILE: C:\PWBatchPDF\Process\400530 - Morro Bay WRF\400530-80-E-703.dwg

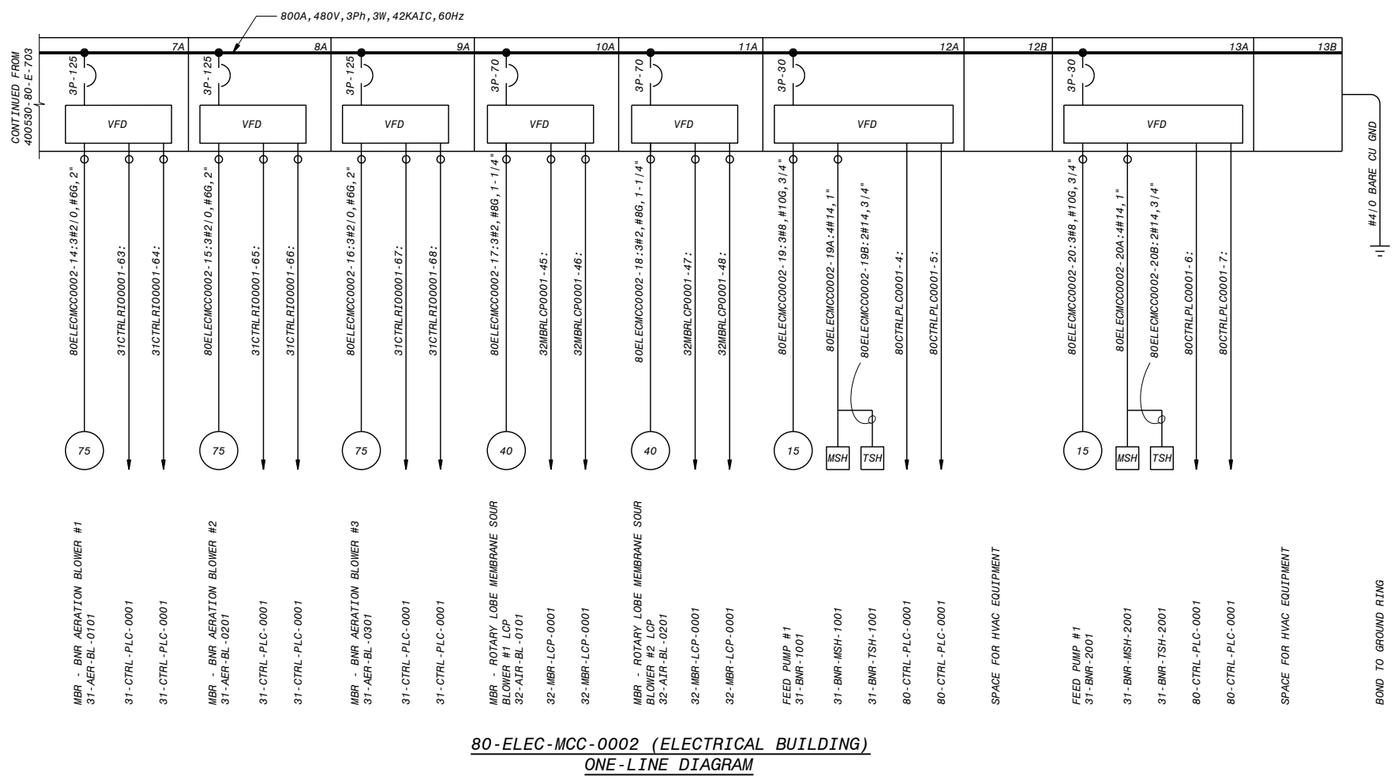


## 80-ELEC-MCC-0002 (ELECTRICAL BUILDING) ONE-LINE DIAGRAM

NO SCALE

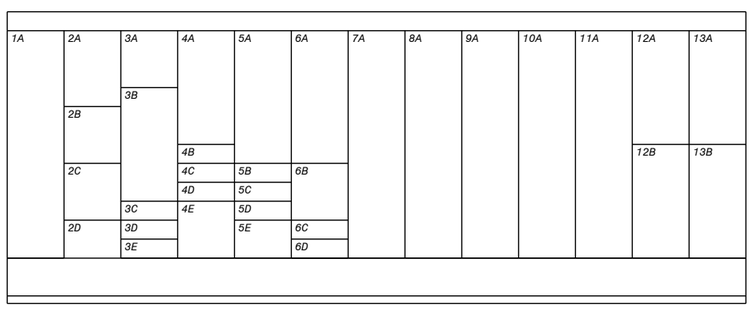


## 80-ELEC-MCC-0002 (ELECTRICAL BUILDING) FRONT ELEVATION

NO SCALE

NOTES:

1. SEE DRAWINGS 00-E-001 AND 00-E-002 FOR ELECTRICAL LEGEND, ABBREVIATIONS AND NOTES.
2. CIRCUIT BREAKER SIZE SHALL BE RECOMMENDED BY MCC SUPPLIER.

COASTAL DEVELOPMENT PERMIT PLANS

| NO. | BY | CHK | APP |
|---|---|---|---|
| B | JSL | MJK | EVB |

| DATE | REVISIONS AND RECORD OF USE |
|---|---|
| 7/30/2019 | 60% SUBMITTAL |

BLACK & VEATCH

JOINT VENTURE

FILANC

BLACK & VEATCH

CITY OF MORRO BAY
MORRO BAY WRF
RECLAMATION FACILITY (WRF)

ELECTRICAL BUILDING
ELECTRICAL
80-ELEC-MCC-0002 ONE-LINE DIAGRAM

DESIGNED: JSL
DETAILED: SBC
CHECKED:
APPROVED:
DATE:

0 1/2 1
IF THIS BAR DOES NOT MEASURE 1" THEN DRAWING IS NOT TO FULL SCALE

PROJECT NO.
400530

80-E-704
SHEET
2 OF 2

F09000A
D400530
PLOTTED: 7/30/2019 8:34 AM FILE: C:\PWBatchPDF\Process\400530 - Morro Bay WRF\400530-80-E-704.dwg

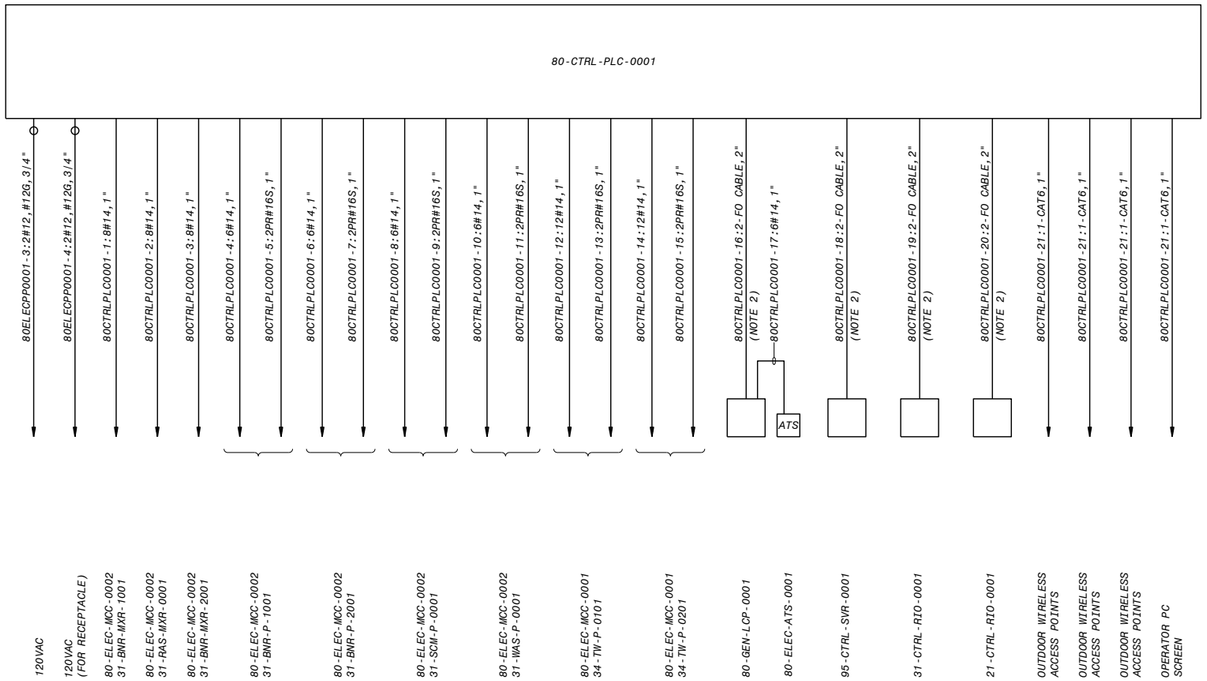


80-CTRL-PLC-0001 (ELECTRICAL BUILDING)
ONE-LINE DIAGRAM
NO SCALE

NOTES:

1. SEE DRAWINGS 00-E-001 AND 00-E-002 FOR ELECTRICAL LEGEND, ABBREVIATIONS AND NOTES.
2. SEE DRAWING 00-T-701 FOR FIBRE OPTIC CABLE REQUIREMENT.

COASTAL DEVELOPMENT PERMIT PLANS

| DATE | REVISIONS AND RECORD OF USE | NO. | BY | CHK | APP |
|---|---|---|---|---|---|
| 7/30/2019 | 60% SUBMITTAL | B | JSL | MJK | EVB |

BLACK & VEATCH
JOINT VENTURE
FILANC
BLACK & VEATCH

CITY OF MORRO BAY
MORRO BAY WRF
RECLAMATION FACILITY (WRF)

ELECTRICAL BUILDING
ELECTRICAL
80-CTRL-PLC-0001 ONE-LINE DIAGRAM

DESIGNED: JSL
DETAILED: SBC
CHECKED:
APPROVED:
DATE:

0 1/2 1
IF THIS BAR DOES NOT MEASURE 1" THEN DRAWING IS NOT TO FULL SCALE

PROJECT NO.
400530

80-E-711
SHEET
OF

F09000A
D400530
PLOTTED: 7/30/2019 8:34 AM FILE: C:\PWBatchPDF\Process\400530 - Morro Bay WRF\400530-80-E-711.dwg

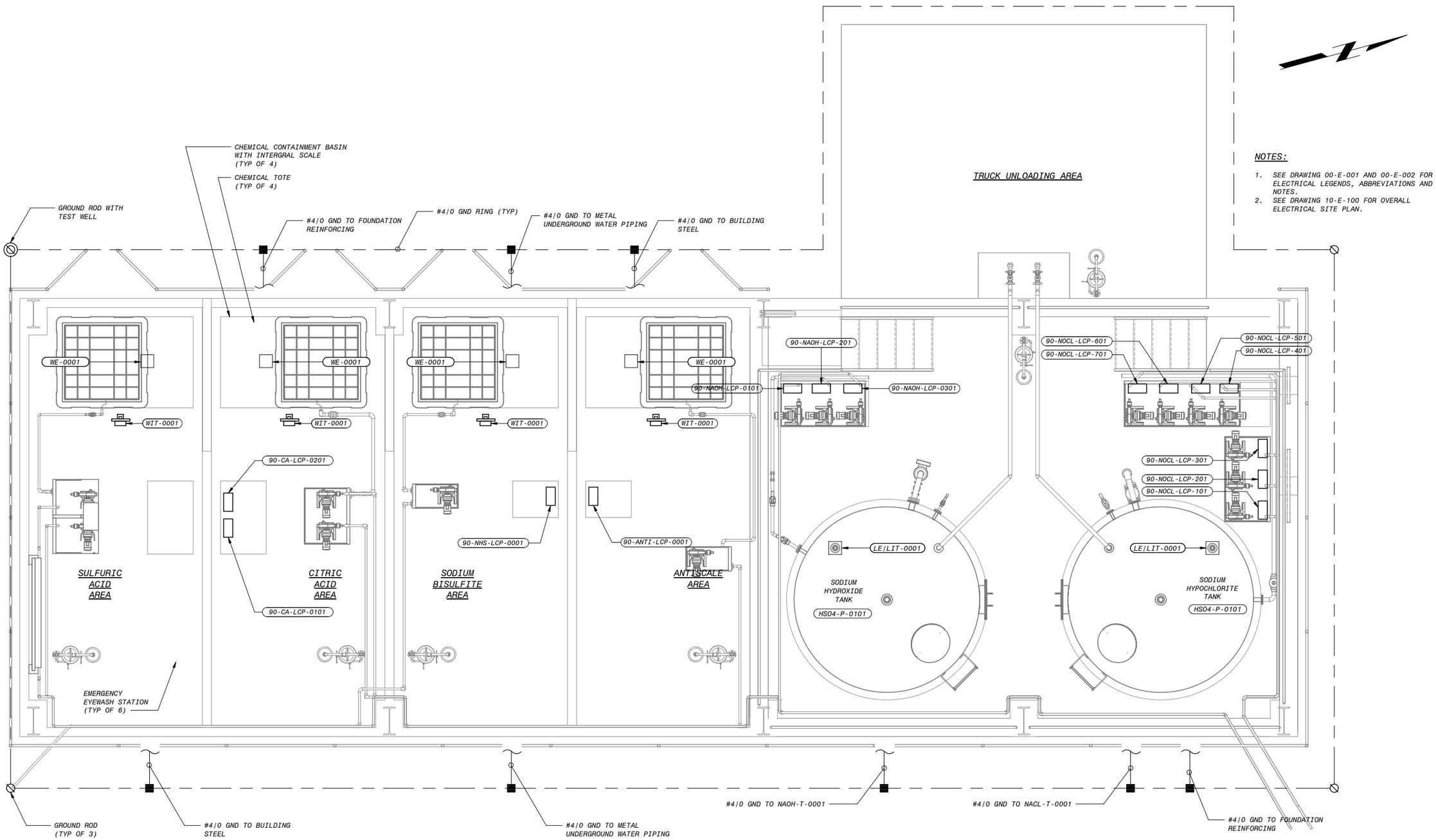


CHEMICAL FACILITY POWER AND GROUNDING PLAN

3/8" = 1'-0"

NOTES:

1. SEE DRAWING 00-E-001 AND 00-E-002 FOR ELECTRICAL LEGENDS, ABBREVIATIONS AND NOTES.
2. SEE DRAWING 10-E-100 FOR OVERALL ELECTRICAL SITE PLAN.

12" 0' 1' 2' 3' 4' 5' 6' 7'

3/8" = 1'-0"

COASTAL DEVELOPMENT PERMIT PLANS

| DATE | REVISIONS AND RECORD OF USE | NO. | BY | CHK | APP |
|---|---|---|---|---|---|
| 7/30/2019 | 60% SUBMITTAL | B | JSL | MJK | EVB |

BLACK & VEATCH

JOINT VENTURE

FILANC

BLACK & VEATCH

CITY OF MORRO BAY
MORRO BAY WATER RECLAMATION FACILITY (WRF)

CHEMICAL FACILITY ELECTRICAL POWER AND GROUNDING PLAN

DESIGNED: JSL
DETAILED: SBC
CHECKED:
APPROVED:
DATE:

0 1/2 1

IF THIS BAR DOES NOT MEASURE 1" THEN DRAWING IS NOT TO FULL SCALE

PROJECT NO. 400530

90-E-101

SHEET OF

PLOTTED: 30-07-2019 17:32:24

D400530

COASTAL DEVELOPMENT PERMIT PLANS

NOTES:

1. SEE DRAWINGS 00-E-001 AND 00-E-002 FOR ELECTRICAL LEGEND, ABBREVIATIONS AND NOTES.
2. SEE DRAWING 00-T-701 FOR FIBRE OPTIC CABLE REQUIREMENT.

DESIGNED: JSL
DETAILED: SBC
CHECKED:
APPROVED:
DATE:

0 1/2 1
IF THIS BAR DOES NOT MEASURE 1" THEN DRAWING IS NOT FULL SCALE

PROJECT NO. 400530

90-E-711
SHEET OF

CITY OF MORRO BAY
MORRO BAY WRF
RECLAMATION FACILITY (WRF)

CHEMICAL FACILITY
ELECTRICAL
90-CTRL-RIO-0001 ONE-LINE DIAGRAM

BLACK & VEATCH
JOINT VENTURE
FILANC BLACK & VEATCH

| DATE | REVISIONS AND RECORD OF USE | NO. | BY | CHK | APR |
|---|---|---|---|---|---|
| 7/30/2019 | 60% SUBMITTAL | B | JSL | MJK | EVB |

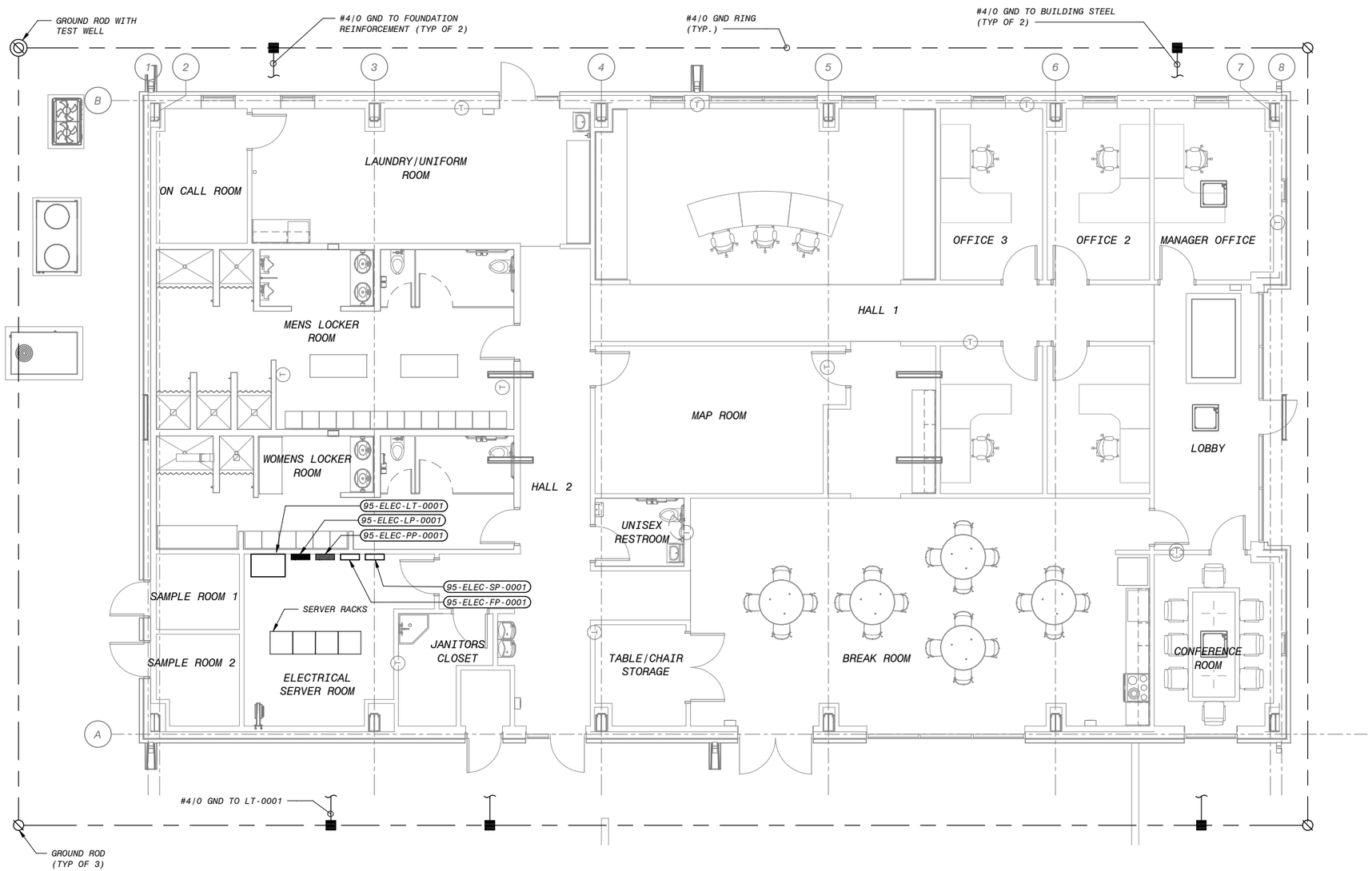


OPERATIONS BUILDING BUILDING POWER AND GROUNDING

3/16" = 1'-0"

NOTES-

1. SEE DRAWING 00-E-001 AND 00-E-002 FOR ELECTRICAL LEGENDS, ABBREVIATIONS AND NOTES.
2. SEE DRAWING 10-E-100 FOR OVERALL ELECTRICAL SITE PLAN.

| DATE | REVISIONS AND RECORD OF USE | NO. | BY | CHK | APP |
|---|---|---|---|---|---|
| 7/30/2019 | 60% SUBMITTAL | B | JSL | MJK | EVB |

BLACK & VEATCH

JOINT VENTURE

FILANC

BLACK & VEATCH

CITY OF MORRO BAY
MORRO BAY WRF
RECLAMATION FACILITY (WRF)

OPERATIONS BUILDING
ELECTRICAL
POWER AND GROUNDING

DESIGNED: JSL
DETAILED: SBC
CHECKED:
APPROVED:
DATE:

0 1/2 1
IF THIS BAR DOES NOT MEASURE 1" THEN DRAWING IS NOT TO FULL SCALE

PROJECT NO. 400530

95-E-101
SHEET
OF

6" 4' 2' 0' 5' 10'
3/16" = 1'-0"

COASTAL DEVELOPMENT PERMIT PLANS

PLOTTED: 30-07-2019 17:38:13
D400530

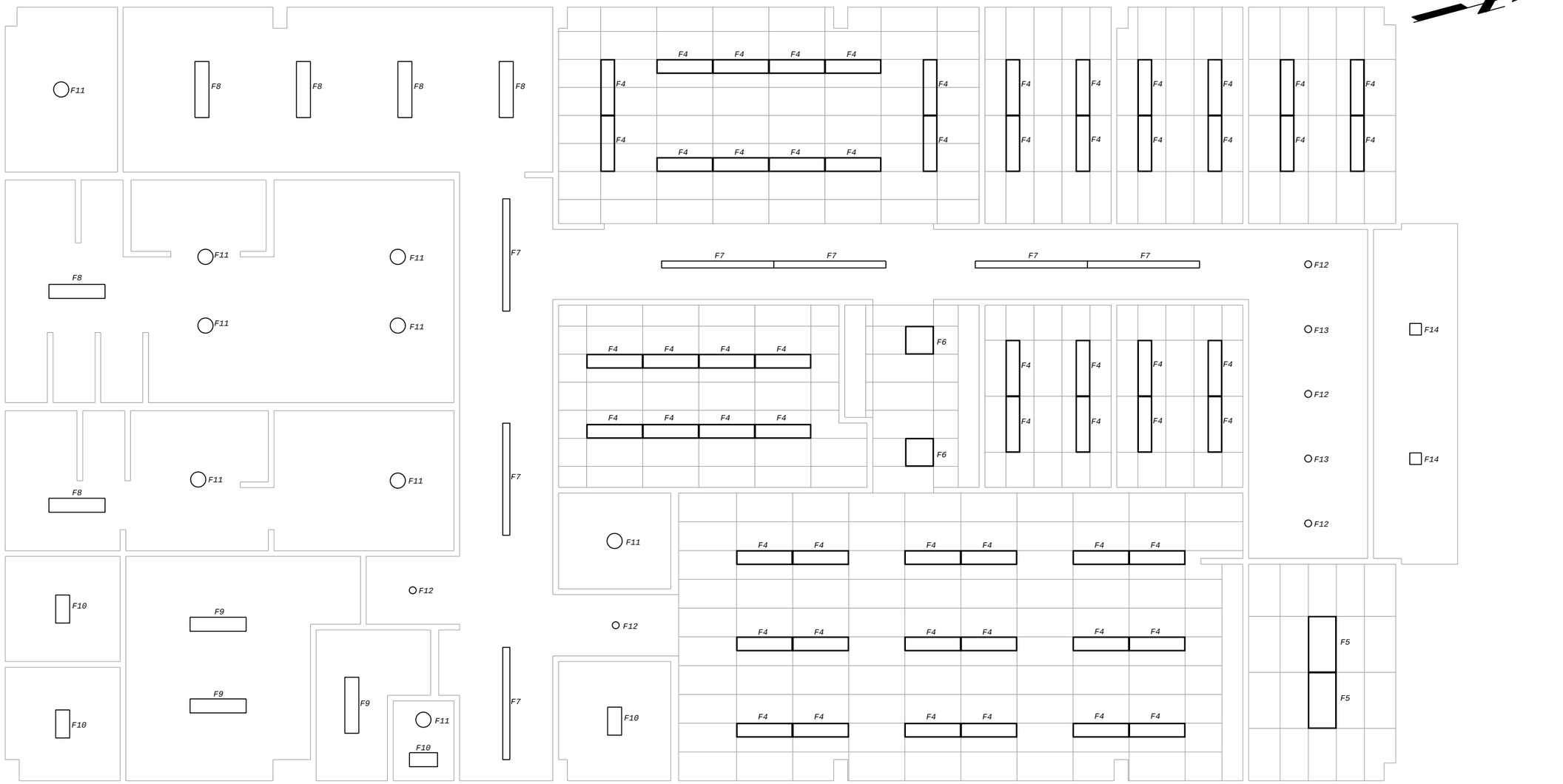


## OPERATIONS BUILDING LIGHTING PLAN

1/4"=1'-0"

| LIGHTING FIXTURE SCHEDULE | |
|---|---|
| **FIXTURE** | **DESCRIPTION** |
| F4 | 1' X 4' RECESSED DIRECT / INDIRECT LED TROFFER. |
| F5 | 2' X 4' RECESSED DIRECT / INDIRECT LED TROFFER. |
| F6 | 2' X 2' RECESSED DIRECT / INDIRECT LED TROFFER. |
| F7 | 8' LONG DIRECT / INDIRECT LED SURFACE STRIP LIGHT. |
| F8 | 1' X 4' SURFCAE LED WRAPAROUND FIXTURE. |
| F9 | 1' X 4' SURFACE LED UTILITY FIXTURE. |
| F10 | 1' X 2' SURFACE LED UTILITY FIXTURE. |
| F11 | 13" DIA. SURFACE LED SLIM ROUND FIXTURE. |
| F12 | 6" DIA. RECESSED LED WIDE ANGLE DOWNLIGHT FIXTURE. |
| F13 | 6" DIA. RECESSED LED ADJUSTABLE SPOT FIXTURE. |
| F14 | 10" X 10" SURFACE LED WET LOCATION FIXTURE. |

NOTES:

1. SEE DRAWINGS 00-E-001 AND 00-E-002 FOR ELECTRICAL LEGEND, ABBREVIATIONS AND NOTES.

4' 2' 0 4' 8'

1/4"=1'-0"

# COASTAL DEVELOPMENT PERMIT PLANS

| NO. | BY | CHK | APP |
|---|---|---|---|
| B | JSL | MJK | EVB |

| DATE | REVISIONS AND RECORD OF USE |
|---|---|
| 7/30/2019 | 60% SUBMITTAL |

BLACK & VEATCH

JOINT VENTURE

FILANC

BLACK & VEATCH

CITY OF MORRO BAY
MORRO BAY WRF
RECLAMATION FACILITY (WRF)

OPERATIONS BUILDING
ELECTRICAL
LIGHTING PLAN

DESIGNED: JSL
DETAILED: SBC
CHECKED:
APPROVED:
DATE:

0 1/2 1

IF THIS BAR DOES NOT MEASURE 1" THEN DRAWING IS NOT TO FULL SCALE

PROJECT NO.
400530

95-E-111
SHEET
OF

FD9000A
D489530
PLOTTED: 7/30/2019 12:52 PM FILE: C:\pw_working\bvw_americas\d0683637\400530-95-E-111.dwg

| | | | PANEL BOARD: 95-ELEC-PP-0001 | | BUS: COPPER | | | | MAINS: 3P-200A MAIN BREAKER | | | | |
|---|---|---|---|---|---|---|---|---|---|---|---|---|---|
| PHASE | | | SERVICE: 480 3PH, 4W, S/N | | RATING: 200A | | | | LOCATION: OPERATIONS BUILDING | | | PHASE | |
| "A" | "B" | "C" | MOUNTING: SURFACE | | | | | | | | "A" | "B" | "C" |
| V.A. | V.A. | V.A. | LOAD | P | BKR | CKT # | | BKR | P | LOAD | V.A. | V.A. | V.A. |
| 345 | 345 | 345 | PHP-101 | 3 | 15 | 1 | 2 | 15 | 3 | PHP-104 | 345 | 345 | 345 |
| 345 | 345 | 345 | PHP-102 | 3 | 15 | 3 | 4 | 15 | 2 | PHP-107 | 345 | 345 | 345 |
| 345 | 345 | 345 | PHP-103 | 3 | 15 | 5 | 6 | 15 | 3 | HVAC 1 (Assumed) | 345 | 345 | 345 |
| 10000 | 10000 | 10000 | 95-ELEC-LT-0001 | 3 | 80 | 7 | 8 | 15 | 3 | SPARE | 0 | 0 | 0 |
| 0 | 0 | 0 | SPARE | 3 | 15 | 9 | 10 | 15 | 3 | SPARE | 0 | 0 | 0 |
| 0 | 0 | 0 | SPARE | 3 | 15 | 11 | 12 | 15 | 3 | SPARE | 0 | 0 | 0 |
| 0 | 0 | 0 | SPARE | 3 | 15 | 13 | 14 | 15 | 3 | SPARE | 0 | 0 | 0 |
| 0 | 0 | 0 | SPARE | 3 | 15 | 15 | 16 | 15 | 3 | SPARE | 0 | 0 | 0 |
| 0 | 0 | 0 | SPARE | 3 | 15 | 17 | 18 | 15 | 3 | SPARE | 0 | 0 | 0 |
| 0 | 0 | 0 | SPARE | 3 | 15 | 19 | 20 | 15 | 3 | SPARE | 0 | 0 | 0 |
| 0 | 0 | 0 | SPARE | 3 | 15 | 21 | 22 | 15 | 3 | SPARE | 0 | 0 | 0 |
| 0 | 0 | 0 | SPARE | 3 | 15 | 23 | 24 | 30 | 3 | SPARE | 0 | 0 | 0 |
| 0 | 0 | 0 | SPARE | 3 | 30 | 25 | 26 | 30 | 3 | SPARE | 0 | 0 | 0 |
| 0 | 0 | 0 | SPARE | 3 | 30 | 27 | 28 | 15 | 3 | SPARE | 0 | 0 | 0 |
| 11036 | | | TOTAL "A" | | | 12072 | | | | TOTAL "A" | 1036 | | |
| | 11036 | | TOTAL "B" | | | 12072 | | | | TOTAL "B" | | 1036 | |
| | | 11036 | TOTAL "C" | | | 12072 | | | | TOTAL "C" | | | 1036 |
| | | | TOTAL | | | 36217 | | | | | | | |

## OPERATIONS BUILDING 95-ELEC-PP-0001
## POWER PANELS SCHEDULE
NO SCALE

NOTES:

1. SEE DRAWINGS 00-E-001 AND 00-E-002 FOR ELECTRICAL LEGEND, ABBREVIATIONS AND NOTES.

COASTAL DEVELOPMENT PERMIT PLANS

| DATE | | REVISIONS AND RECORD OF USE | NO. | BY | CHK | APD |
|---|---|---|---|---|---|---|
| 7/30/2019 | 60% SUBMITTAL | | B | JSL | MJK | EVB |

BLACK & VEATCH
JOINT VENTURE
FILANC
BLACK & VEATCH

CITY OF MORRO BAY
MORRO BAY WRF
RECLAMATION FACILITY (WRF)

OPERATIONS BUILDING
ELECTRICAL
POWER PANELS SCHEDULE

DESIGNED: JSL
DETAILED: SBC
CHECKED:
APPROVED:
DATE:

0 1/2 1
IF THIS BAR DOES NOT MEASURE 1" THEN DRAWING IS NOT TO FULL SCALE

PROJECT NO.
400530

95-E-601
SHEET
1 OF 1

F09000A
D400530
PLOTTED: 7/30/2019 8:35 AM FILE: C:\PWBatchPDF\Process\400530 - Morro Bay WRF\400530-95-E-601.dwg

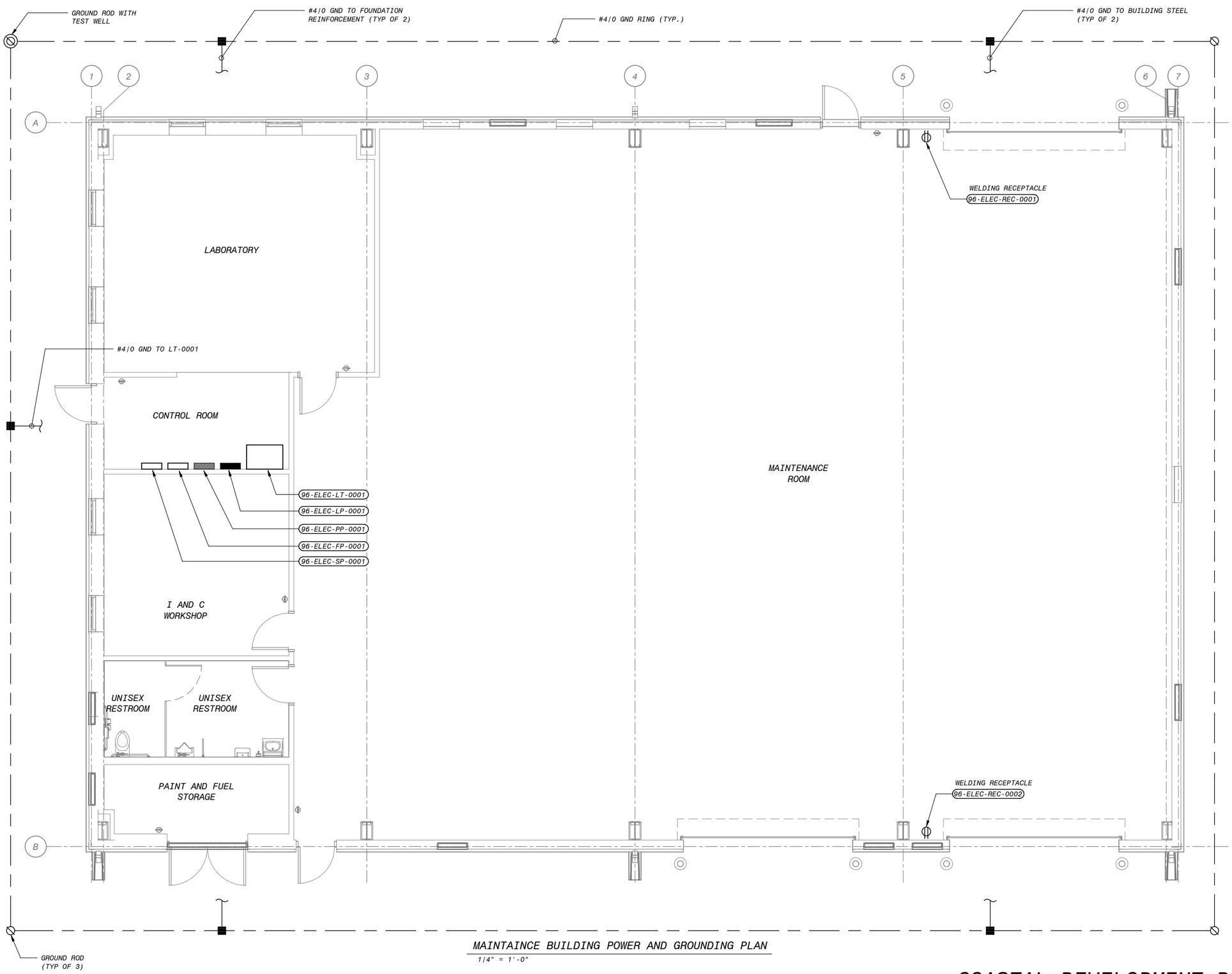


MAINTAINCE BUILDING POWER AND GROUNDING PLAN

1/4" = 1'-0"

NOTES-

1. SEE DRAWING 00-E-001 AND 00-E-002 FOR ELECTRICAL LEGENDS, ABBREVIATIONS AND NOTES.
2. SEE DRAWING 10-E-100 FOR OVERALL ELECTRICAL SITE PLAN.

4' 2' 0' 4' 8'

1/4" = 1'-0"

COASTAL DEVELOPMENT PERMIT PLANS

| NO. | BY | CHK | APP |
|---|---|---|---|
| B | JSL | MJK | EVB |

| DATE | REVISIONS AND RECORD OF USE |
|---|---|
| 7/30/2019 | 60% SUBMITTAL |

BLACK & VEATCH

JOINT VENTURE

FILANC

BLACK & VEATCH

CITY OF MORRO BAY
MORRO BAY WRF
RECLAMATION FACILITY (WRF)

MAINTAINCE BUILDING
ELECTRICAL
POWER AND GROUNDING PLAN

DESIGNED: JSL
DETAILED: SBC
CHECKED:
APPROVED:
DATE:

0 1/2 1

IF THIS BAR DOES NOT MEASURE 1" THEN DRAWING IS NOT TO FULL SCALE

PROJECT NO. 400530

96-E-101

SHEET OF

PLOTTED: 30-07-2019 17:42:46

D400530

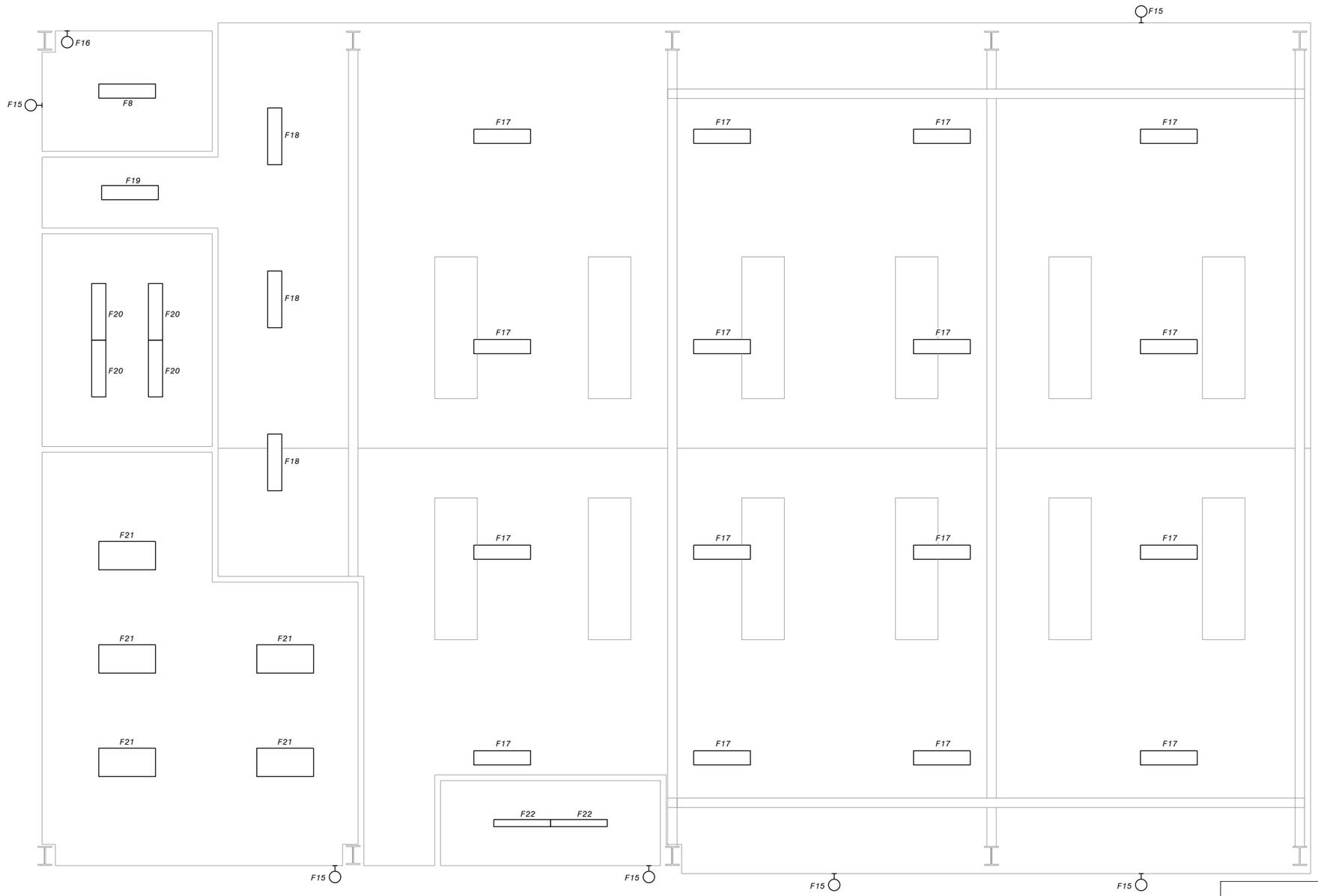


## MAINTENANCE BUILDING LIGHTING PLAN

1/4"=1'-0"

| LIGHTING FIXTURE SCHEDULE | |
|---|---|
| **FIXTURE** | **DESCRIPTION** |
| F8 | 1' X 4' SURFACE LED WRAPAROUND FIXTURE. |
| F15 | WALL SURFACE LED WET LOCATION WALL PACK FIXTURE. |
| F16 | WALL MOUNTED LED VANITY FIXTURE. |
| F17 | 1' X 4' SUSPENDED LED HIBAY FIXTURE, HIGH LUMEN DIMMABLE. |
| F18 | 1' X 4' SUSPENDED LED HIBAY FIXTURE, MID LUMEN DIMMABLE. |
| F19 | 1' X 4' SUSPENDED LED FIXTURE. |
| F20 | 1' X 4' DIRECT / INDIRECT LED SURFACE FIXTURE. |
| F21 | 2' X 4' DIRECT / INDIRECT LED SURFACE FIXTURE. |
| F22 | 4' VAPOR TIGHT LED STRIP LIGHT. |

NOTES:

1. SEE DRAWINGS 00-E-001 AND 00-E-002 FOR ELECTRICAL LEGEND, ABBREVIATIONS AND NOTES.

4' 2' 0 4' 8'

1/4"=1'-0"

# COASTAL DEVELOPMENT PERMIT PLANS

| NO. | BY | CHK | APP |
|---|---|---|---|
| B | JSL | MJK | EVB |

| DATE | REVISIONS AND RECORD OF USE |
|---|---|
| 7/30/2019 | 60% SUBMITTAL |

BLACK & VEATCH
JOINT VENTURE
FILANC
BLACK & VEATCH

CITY OF MORRO BAY
MORRO BAY WRF
RECLAMATION FACILITY (WRF)

MAINTENANCE BUILDING
ELECTRICAL
LIGHTING PLAN

DESIGNED: JSL
DETAILED: SBC
CHECKED:
APPROVED:
DATE:

0 1/2 1
IF THIS BAR DOES NOT MEASURE 1" THEN DRAWING IS NOT TO FULL SCALE

PROJECT NO.
400530

96-E-111
SHEET
OF

FD9000A
D400530
PLOTTED: 7/30/2019 1:58 AM FILE: C:\PWBatchPDF\Process\400530 - Morro Bay WRF\400530-96-E-111.dwg

| | | | PANEL BOARD: 96-ELEC-PP-0001 | | BUS: COPPER | | | | MAINS: 3P-250A MAIN BREAKER | | | | |
|---|---|---|---|---|---|---|---|---|---|---|---|---|---|
| PHASE | | | SERVICE: 480 3PH, 4W, S/N | | RATING: 250A | | | | LOCATION: MAINTAINENCE BUILDING | | PHASE | | |
| "A" | "B" | "C" | MOUNTING: SURFACE | | | | | | | | "A" | "B" | "C" |
| V.A. | V.A. | V.A. | LOAD | P | BKR | CKT # | | BKR | P | LOAD | V.A. | V.A. | V.A. |
| 345 | 345 | 345 | PHP-108 | 3 | 15 | 1 | 2 | 15 | 3 | PHP-109 | 345 | 345 | 345 |
| 3454 | 3454 | 0 | Welding Socket # 1 | 2 | 40 | 3 | 4 | 40 | 2 | Welding Socket # 2 | 0 | 3454 | 3454 |
| 345 | 345 | 345 | HVAC 1 (Assumed) | 3 | 15 | 5 | 6 | 15 | 3 | HVAC 2 (Assumed) | 345 | 345 | 345 |
| 1727 | 1727 | 1727 | CRANE | 3 | 30 | 7 | 8 | 15 | 3 | SPARE | 0 | 0 | 0 |
| 10000 | 10000 | 10000 | 96-ELEC-LT-0001 | 3 | 80 | 9 | 10 | 15 | 3 | SPARE | 0 | 0 | 0 |
| 0 | 0 | 0 | SPARE | 3 | 15 | 11 | 12 | 15 | 3 | SPARE | 0 | 0 | 0 |
| 0 | 0 | 0 | SPARE | 3 | 15 | 13 | 14 | 15 | 3 | SPARE | 0 | 0 | 0 |
| 0 | 0 | 0 | SPARE | 3 | 15 | 15 | 16 | 15 | 3 | SPARE | 0 | 0 | 0 |
| 0 | 0 | 0 | SPARE | 3 | 15 | 17 | 18 | 15 | 3 | SPARE | 0 | 0 | 0 |
| 0 | 0 | 0 | SPARE | 3 | 15 | 19 | 20 | 15 | 3 | SPARE | 0 | 0 | 0 |
| 0 | 0 | 0 | SPARE | 3 | 15 | 21 | 22 | 15 | 3 | SPARE | 0 | 0 | 0 |
| 0 | 0 | 0 | SPARE | 3 | 15 | 23 | 24 | 30 | 3 | SPARE | 0 | 0 | 0 |
| 0 | 0 | 0 | SPARE | 3 | 30 | 25 | 26 | 30 | 3 | SPARE | 0 | 0 | 0 |
| 0 | 0 | 0 | SPARE | 3 | 30 | 27 | 28 | 15 | 3 | SPARE | 0 | 0 | 0 |
| 15871 | | | TOTAL "A" | | | 16562 | | | | TOTAL "A" | 691 | | |
| | 15871 | | TOTAL "B" | | | 20016 | | | | TOTAL "B" | | 4144 | |
| | | 12418 | TOTAL "C" | | | 16562 | | | | TOTAL "C" | | | 4144 |
| | | | TOTAL | | | 53140 | | | | | | | |

## MAINTENANCE BUILDING 96-ELEC-PP-0001
## POWER PANELS SCHEDULE

NO SCALE

NOTES:

1. SEE DRAWINGS 00-E-001 AND 00-E-002 FOR ELECTRICAL LEGEND, ABBREVIATIONS AND NOTES.

COASTAL DEVELOPMENT PERMIT PLANS

| NO. | BY | CHK | APP |
|---|---|---|---|
| B | JSL | MJK | EVB |

| DATE | REVISIONS AND RECORD OF USE |
|---|---|
| 7/30/2019 | 60% SUBMITTAL |

BLACK & VEATCH

JOINT VENTURE

FILANC

BLACK & VEATCH

CITY OF MORRO BAY
MORRO BAY WRF
RECLAMATION FACILITY (WRF)

MAINTENANCE BUILDING
ELECTRICAL
POWER PANELS SCHEDULE

DESIGNED: JSL
DETAILED: SBC
CHECKED:
APPROVED:
DATE:

0 1/2 1
IF THIS BAR DOES NOT MEASURE 1" THEN DRAWING IS NOT TO FULL SCALE

PROJECT NO.
400530

96-E-601
SHEET
OF

F090OA
D400530
PLOTTED: 7/30/2019 7:42 PM FILE: C:\pw_working\bvw_americas\d0683637\400530-96-E-601.dwg

Appendix D

# MORRO BAY WATER RECLAMATION FACILITY HYDROLOGY REPORT DATED JULY 31, 2019

# Hydrology Report

Prepared for:
Filanc Black & Veatch
Design Builder of the Morro Bay
WRF for the City of Morro Bay

Prepared By:
Ashley & Vance Engineering, Inc.
1413 Monterey Street
San Luis Obispo, CA 93401
805.545.0010

## Morro Bay Water Treatment Facility

Morro Bay, CA

July 31, 2019
AV Job # 19768

## Contents

Introduction ..... 2
Existing Conditions ..... 2
Project Description ..... 2
Applicable Codes and Standards ..... 2
Drainage Scheme ..... 3
Post Construction Stormwater Management ..... 3
Hillside Drainage ..... 4
Treatment Plant Site Drainage ..... 4
Design Criteria ..... 5
Conclusion ..... 5
Calculations ..... 6

## Introduction

This report identifies and quantifies the potential drainage impacts arising from the construction of the Morro Bay Water Reclamation Facility. The site is located southeast of the town of Morro Bay along State Route 1. The project is located outside of the MS4. The intent of this report is to provide calculations showing that the proposed project will have minimal impact on downstream property and improvements.

### Existing Conditions

The existing land at the South Bay Boulevard site consists of approximately 22 acres of undeveloped land that is currently used for grazing. The site is located at the base of two hills that drain through the site via sheet flow. The site slopes at grades that vary from 10 to 30 percent toward a dry creek bed. The existing ground cover is poor to fair natural grass and the site is underlain by clay soils and bedrock. Based on the grass cover, the steepness of the site and the poor infiltration of the soils a higher curve number was chosen for the existing condition calculations.

The site drains to Chorro Creek which flows into the Morro Bay Estuary between South Bay Boulevard and Main Street.

### Project Description

This project includes the construction of the Morro Bay Water Reclamation Facility plant and the associated access road.

Construction of the site will require cut and fill slopes above the project. Swales will be constructed above and below these slopes to intercept the runon from the upstream hills. Catch basins located in the swales will collect this runoff and convey it under the treatment plant area via storm drains that will outlet at the toe of the slope.

The runoff from the plant will be directed to a gutter that runs along the eastern edge of the plant that will then flow to a trench drain that will direct runoff into one of two onsite stormwater detention basins. The outfalls for these ponds are designed to release the runoff from the plant at pre-development rates.

The storm drains collecting the offsite runon as well as the treatment plant stormwater detention basin outfalls will outlet to level spreaders located below the tow of slope on the eastern edge of the site. Level spreaders will be installed at the outlet of the pipes to redistribute the water back into sheet flow below the site.

### Applicable Codes and Standards

The stormwater drainage design will conform to the latest editions of the following applicable standards and codes:

- Stormwater Management Guidance Manual for Low Impact Development & Post-Construction Requirements – City of Morro Bay, California (2014)

- Post-construction Stormwater Management Requirements for Development Projects in the Central Coast Region – California Regional Water Quality Control Board, Central Coast Region (2013)
- 2014 Public Improvement Standards – Department of Public Works & Transportation, San Luis Obispo County
- Hydraulic Engineering Circular No. 14 – Hydraulic Design of Energy Dissipators for Culverts and Channels – U.S. Department of Transportation, Federal Highway Administration

## Drainage Scheme

The intent of the drainage design is to route runoff from around the site as well as mitigate the increase in flow due to the development of the project. The primary concern driving the drainage design was three-fold; intercepting the runon from the adjacent hills, reduce the runoff generated by the plant to below pre-development rates, and reintroduce all the stormwater (run on and runoff) to sheet flow to prevent erosion of the land between the plant and the existing dry creek.

To that end, 4 outfalls were designed to split up the total flow and allow water to leave the via level spreaders. These level spreaders consist of a gravel bed installed on contour with a concrete lip that will act as a weir allowing the water to spill over the lip at a constant depth and velocity over the full length of the spreader and ensuring sheet flow.

To simplify construction 3 swale sections were used on site. The main trapezoidal channel with a base of 3', side slopes of 1:1 and a depth of 2' were chosen for the swales collecting most of the water. This swale section occurs with both cobble lining and concrete depending on the location of the swale. Minor swales located at the top of cut slopes consist of a concrete trapezoidal section that has a base of 1', 1:1 side slopes and a depth of 1'.

### Post Construction Stormwater Management

This project is located outside of the MS4 area and is not subject to the post-construction requirements for development on the Central Coast. However, it will incorporate stormwater BMPs to minimize the impact of this project on the surrounding environment.

The north detention basin will include a gate that will allow the outlet of the pond to be closed. This will allow the first flush storm to be contained in the pond and the runoff can be pumped back into the plant for treatment.

Runoff from the parking lot near the operations building will be directed to landscaping prior to flowing to the stormwater basin.

Both basins have the outlet elevations set at 6" above the bottom of the basin to allow for settling of suspended sediment. The outlets to the pond will limit the release from the ponds to below pre-development rates.

## Hillside Drainage

Runon flows on to the site form the western hillside above the site. A series of swales will intercept this runoff prior to flowing onto the site. The hillside that flows on to the site was broken up into drainage areas that are described below. See the Post Construction Drainage Exhibit for the location of these areas.

A localized high point is located the fill portion of the site (between swale N2 and swale S2) that divides the northern and southern flowing areas.

The northern drainage areas (North 1-5) consists of the portion of the hillside that runs on to the site and will be directed around the site to the north. This portion of the site will be intercepted by swales that will end at level spreader A.

The southern portion of the site will be roughly evenly split between two level spreaders. Drainage areas South 1-4 and 7-8 drain to a 3'x3' catch basin (catch basin B) located in the base of a swale. This catch basin and the connecting storm drain (storm drain B) will collect a portion of the flow and direct it to Level spreader B. Stormdrain B is a 24" storm drain that will limit the amount of flow directed to the level spreader. The excess flow will continue to flow past the catch basin into the downstream swale.

Drainage areas South 5 and 6 as well as the bypass in the upstream swale will flow to catch basin C and storm drain C. Stormdrain C is a 24" storm drain and during the 100-year event will be flowing under pressure but will not overtop the upstream swale. A larger storm drain flowing under gravity flow is not feasible due to pipe clearance issues for other utilities servicing the treatment plant. Storm drain C will outlet into a manhole that also collects the flow out of Basin 2 and directs the runoff to level spreader C.

## Treatment Plant Site Drainage

The treatment plant is divided into two drainage management areas, DMA1 and DMA2.

DMA 1 consists of the infrastructure to treat the wastewater and solids. This area is mostly paved and slopes out to a gutter running along the eastern edge of the drive aisle. A trench drain will intercept this runoff and direct it to Basin 1.

Basin 1 has a maximum depth of 4 feet with 3:1 side slopes and a volume of 14, 300 cubic feet of water. The outlet will consist of two orifices, that will restrict the flow out of the pond to below pre-development levels. The outlet structure will include a gate that will allow the outfall to be closed so that the first flush storm can be retained and pumped back to the headworks for treatment. The outlet structure for this pond consists of two orifices, a 4" orifice located 6" above the bottom of the basin, and an 8" orifice located 2.4' above the bottom of the pond. The first outlet is set 6" above the bottom of the pond to allow for sedimentation prior to discharge off-site.

DMA 2 consists of infrastructure for advances water reclamation and operations of the facility. This portion also slopes out to a gutter along the eastern drive aisle and drains via a trench drain to Pond 2. Pond 2 is 6' deep with 3:1 side slopes and has a capacity of 43,900 cubic feet. The outlet structure for this pond consists of two orifices, a 6" orifice located 6" above the bottom of the basin, and a 10" orifice

located 2' above the bottom of the pond. The first outlet is set 6" above the bottom of the pond to allow for sedimentation prior to discharge off-site.

## Design Criteria

The full site was modeled in HydroCAD using the Santa Urban Hydrograph Method. Rainfall data were obtained from the NOAA website. The hillside runon and the Pre-project condition were modeled using a curve number of 78 to account for the steep slope and poor infiltration rate of the soil, as well as the grass cover. A time of concentration of 10 minutes was used for all areas.

The drainage conveyance devices including the swales, catch basins, pipes and level spreaders were sized using a combination of the Hydroflow extension in AutoCAD and Excel spreadsheets. Both programs use Manning's equations to size the drainage components.

The level spreaders were designed with further design considerations from the NRCS.

The main swales were designed to convey the runoff and have a foot of freeboard during the 100-year event. The minor swales were designed to convey the 100-year event with 6" of freeboard.

The ponds were designed to release runoff at pre-development rates for all design storms, and have 1 foot of freeboard during the 100-year event.

The level spreaders are designed to distribute the runoff from the 100-year event back into sheet flow at a rate of less than 2 feet per second and at a minimal depth over the lip of the weir, based on the space provided.

See the Calculations Section at the end of this report.

## Conclusion

This project meets the requirements for drainage design set forth by the City of Morro Bay.

## Calculations

Hillside Drainage Flow Rates for Each Design Storm

| | | Flow Rate (CFS) | | | | | | |
|---|---|---|---|---|---|---|---|---|
| Location | Area (acres) | 2-year | 5-Year | 10-Year | 25-Year | 50-Year | 100-Year | Total |
| North 1 | 9.3 | 2.84 | 6.81 | 10.58 | 16.32 | 20.97 | 26.04 | |
| North 2 | 0.42 | 0.13 | 0.31 | 0.48 | 0.74 | 0.95 | 1.18 | |
| North 3 | 0.9 | 0.27 | 0.66 | 1.02 | 1.58 | 2.03 | 2.52 | |
| North 4 | 0.49 | 0.15 | 0.36 | 0.56 | 0.86 | 1.11 | 1.37 | |
| North 5 | 0.29 | 0.09 | 0.21 | 0.33 | 0.51 | 0.65 | 0.81 | 31.92 |
| South 1 | 10.9 | 3.32 | 7.98 | 12.39 | 19.13 | 24.58 | 30.53 | |
| South 2 | 1.2 | 0.37 | 0.88 | 1.36 | 2.11 | 2.71 | 3.36 | |
| South 3 | 0.97 | 0.3 | 0.71 | 1.1 | 1.7 | 2.19 | 2.72 | |
| South 4 | 0.82 | 0.25 | 0.6 | 0.93 | 1.44 | 1.85 | 2.3 | |
| South 5 | 1.5 | 0.46 | 1.1 | 1.71 | 2.63 | 3.38 | 4.2 | |
| South 6 | 0.5 | 0.15 | 0.37 | 0.57 | 0.88 | 1.13 | 1.4 | |
| South 7 | 1.5 | 0.45 | 1.1 | 1.71 | 2.63 | 3.38 | 4.2 | |
| South 8 | 1.9 | 0.58 | 1.39 | 2.16 | 3.33 | 4.28 | 5.32 | 54.03 |

Trap Channels (100 year event)

| Swale | Contributing Area | Bypass in Swale | Flow Rate | Total flow rate | Velocity | Freeboard | Direction | Section |
|---|---|---|---|---|---|---|---|---|
| N1 | North 1 | 0 | 26.04 | 26.04 | 7.34 | 1.09 | Flows to Swale N4 | Main |
| N2 | North 3 | 0 | 2.52 | 2.52 | 4.18 | 0.58 | Flows to Swale N4 | minor |
| N3 | North 2 | 0 | 1.18 | 1.18 | 8.48 | 0.88 | Flows to Swale N4 | minor |
| N4 | North 1-3, 5 | 0 | 30.55 | 30.55 | 13.49 | 1.38 | Flows to Swale N6 | Main |
| N5 | North 4 | 0 | 1.37 | 1.37 | 8.89 | 0.86 | Flows to Swale N6 | minor |
| N6 | North Side (N1-N5) | 0 | 31.92 | 31.92 | 7.79 | 0.98 | Flows to Level Spreader A | Main |
| S1 | South 1 | 0 | 30.53 | 30.53 | 13.49 | 1.38 | Flows to Swale S4 | Main |
| S2 | South 8 | 0 | 5.32 | 5.32 | 9.21 | 0.59 | Flows to Swale S4 | minor |
| S3 | South 7 | 0 | 4.2 | 4.2 | 12.7 | 0.74 | Flows to Swale S4 | minor |
| S4 | South 1,2,7,8 | 0 | 43.41 | 43.41 | 21.96 | 1.44 | Catch Basin B | Main |
| S5 | South 3, 4 | 0 | 5.02 | 5.02 | 6.48 | 1 | Flows to Catch Basin B | Main with Cobble |
| S6 | South 6 and bypass from Catch Basin B | 22.73 | 1.4 | 24.13 | 11.99 | 1.43 | Flows to Swale S8 | Main |
| S7 | South 5 | 0 | 4.2 | 4.2 | 12.7 | 0.74 | Flows to Swale S8 | minor |
| S8 | Swale S6 and S7 | 0 | 28.33 | 28.33 | 12.6 | 1.38 | Flows to Catch Basin C | Main |

Catch Basins (100 year flow)

| Catch Basin | Recives water from | Total Q (cfs) | Captured Q (cfs) | Bypass Q (cfs) | Bypass flows To | Direction | Notes |
|---|---|---|---|---|---|---|---|
| B | Swale S4 and Swale S5 | 48.43 | 25.7 | 22.73 | Swale S6 | Catch basin connects to Stormdrain B | Flow from this catch basin is restricted by the size and slope of the downstream stormdrain |
| C | Swale S8 | 28.33 | 28.33 | 0 | N/A | Catch basin connects to Stormdrain C | |

Storm Drains (100 year flow)

| | recieves flow from | Total Q | Pipe Size | Outfall |
|---|---|---|---|---|
| Stormdrain B | Catch Basin B | 25.7 | 24 | Flows to level Spreader B |
| Stormdrain C | Catch Basin C | 28.33 | 24 | Flows to level Spreader C |
| P1 | Basin 1 | 2.42 | 18 | Flows to level Spreader D |
| P2 | Basin 2 | 5.31 | 18 | Flows to level Spreader C |

Outfalls (100 year flow)

| Outfalls | Flow Rate (CFS) | Exiting Velocity (fps) | Length (ft) | Width (ft) | Depth of flow over lip of weir (in) |
|---|---|---|---|---|---|
| Level Spreader A | 31.92 | 2 | 122 | 7 | 1.58 |
| Level Spreader B | 25.7 | 1.6 | 191 | 7 | 1 |
| Level Spreader C | 33.64 | 1.75 | 191 | 7 | 1.2 |
| Level Spreader D | 2.42 | 1.5 | 22 | 7 | 0.9 |

Ashley&Vance
ENGINEERING, INC

7/12/2019

Pre Project-DMA 1

| Event | Rainfall (inches) | Runoff (cfs) |
|---|---|---|
| 2-Year | 2.29 | 0.53 |
| 5-year | 3.28 | 1.28 |
| 10-Year | 4.1 | 2 |
| 25-Year | 5.26 | 3.09 |
| 50-Year | 6.16 | 3.97 |
| 100-Year | 7.12 | 4.93 |

Post Project- Pond 1

| | |
|---|---|
| Basin Volume: | 14300 cf |
| Bottom Elevation: | 101.00 |
| Internal Overflow Elevation: | 105.00 |
| Max Water Surface Elev @ 100 yr event: | 103.87 |
| Basin Drains | 31 hours |
| Oriface size and elevation | 4" @ 101.50 |
| Oriface size and elevation | 8" @ 102.40 |

Rim Elevation: 107.00

| Event | Inflow (cfs) | Outflow (cfs) | W.S. Elevation (feet) | Vol. (cf) |
|---|---|---|---|---|
| 2-Year | 1.58 | 0.36 | 102.38 | 3,761 |
| 5-year | 2.42 | 0.82 | 102.75 | 4,977 |
| 10-Year | 3.15 | 1.31 | 102.98 | 5,758 |
| 25-Year | 4.18 | 1.83 | 103.32 | 7,003 |
| 50-Year | 5 | 2.14 | 103.59 | 8,051 |
| 100-Year | 5.87 | 2.42 | 103.87 | 9,187 |

Comparison

| Event | Pre Project Runoff (cfs) | Post Project Outflow (cfs) | % Reduction |
|---|---|---|---|
| 2-Year | 2.29 | 0.36 | 84.3 |
| 5-year | 3.28 | 0.82 | 75.0 |
| 10-Year | 4.1 | 1.31 | 68.0 |
| 25-Year | 5.26 | 1.83 | 65.2 |
| 50-Year | 6.16 | 2.14 | 65.3 |
| 100-Year | 7.12 | 2.42 | 66.0 |

Ashley&Vance
ENGINEERING, INC

7/12/2019

Pre Project-DMA 2

| Event | Rainfall (inches) | Runoff (cfs) |
|---|---|---|
| 2-Year | 2.29 | 1.25 |
| 5-year | 3.28 | 2.89 |
| 10-Year | 4.1 | 4.44 |
| 25-Year | 5.26 | 6.78 |
| 50-Year | 6.16 | 8.67 |
| 100-Year | 7.12 | 10.72 |
| _85TH | 1.1 | 0.03 |
| _95TH | 1.7 | 0.46 |

Post Project- Pond 2

| | |
|---|---|
| Basin Volume: | 43,900 cf |
| Bottom Elevation: | 75.50 |
| Internal Overflow Elevation: | 80.70 |
| Max Water Surface Elev @ 100 yr event: | 79.84 |
| Basin Drain Time | 28 hours |
| Oriface size and elevation | 6" @ 76.0 |
| Oriface size and elevation | 10" @ 77.5 |

Rim Elevation: 82.50

| Event | Inflow (cfs) | Outflow (cfs) | W.S. Elevation (feet) | Vol. (cf) |
|---|---|---|---|---|
| 2-Year | 4.28 | 1.04 | 77.47 | 8,629 |
| 5-year | 6.42 | 2.1 | 78.01 | 11,639 |
| 10-Year | 8.22 | 3.12 | 78.36 | 13,752 |
| 25-Year | 10.79 | 4.13 | 78.89 | 17,234 |
| 50-Year | 12.79 | 4.75 | 79.31 | 20,167 |
| 100-Year | 14.93 | 5.31 | 79.74 | 23,382 |

Comparison

| Event | Pre Project Runoff (cfs) | Post Project Outflow (cfs) | % Reduction |
|---|---|---|---|
| 2-Year | 1.25 | 1.04 | 16.8 |
| 5-year | 2.89 | 2.1 | 27.3 |
| 10-Year | 4.44 | 3.12 | 29.7 |
| 25-Year | 6.78 | 4.13 | 39.1 |
| 50-Year | 8.67 | 4.75 | 45.2 |
| 100-Year | 10.72 | 5.31 | 50.5 |

Ashley & Vance
ENGINEERING, INC

# Concrete Channel - Swale S1

| System Characteristics | |
|---|---|
| Design Flow Rate (cfs) | 30.5 |
| Channel bottom width | 3.0 |
| Channel depth | 2.0 |
| Channel bank slope | 1:1 |
| Channel flowline slope | 5% |
| Design minimum freeboard (ft) | 0.5 |

| Outlet Layout | |
|---|---|
| Mannings n | 0.015 |
| Design Flow Depth (ft) | 0.63 |
| Design Freeboard (ft) | 1.38 |
| Design Flow Velocity (fps) | 13.49 |

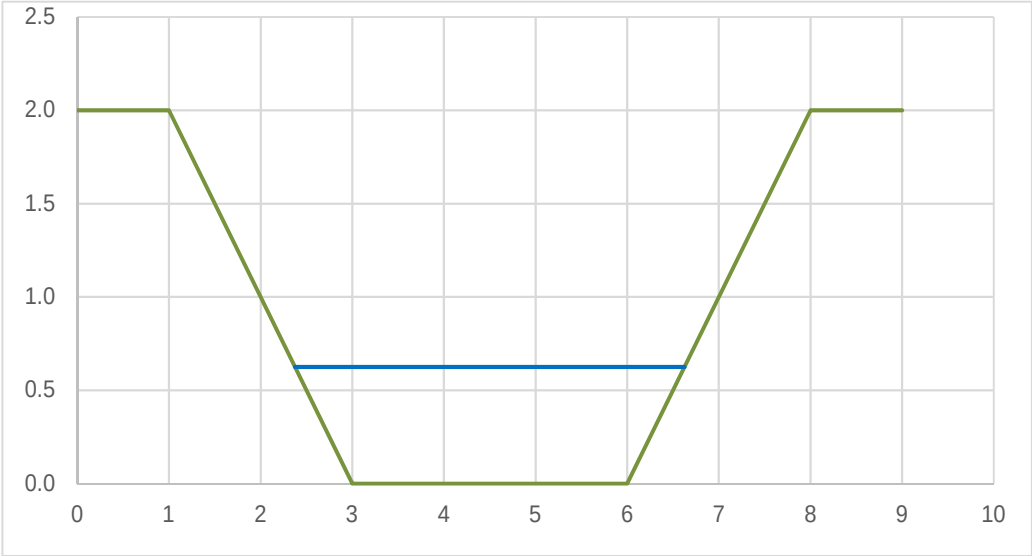

Ashley & Vance
ENGINEERING, INC

# Concrete Channel - Swale S2

| System Characteristics | |
|---|---|
| Design Flow Rate (cfs) | 5.3 |
| Channel bottom width | 1.0 |
| Channel depth | 1.0 |
| Channel bank slope | 1:1 |
| Channel flowline slope | 5% |
| Design minimum freeboard (ft) | 0.5 |

| Outlet Layout | |
|---|---|
| Mannings n | 0.015 |
| Design Flow Depth (ft) | 0.41 |
| Design Freeboard (ft) | 0.59 |
| Design Flow Velocity (fps) | 9.21 |

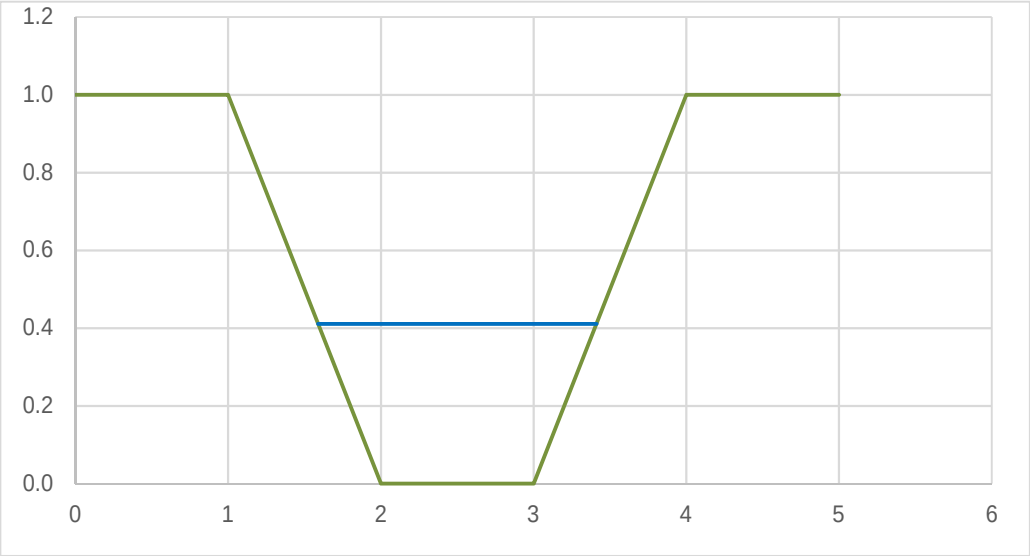

Ashley & Vance
ENGINEERING, INC

# Concrete Channel - Swale S3

| System Characteristics | |
|---|---|
| Design Flow Rate (cfs) | 4.2 |
| Channel bottom width | 1.0 |
| Channel depth | 1.0 |
| Channel bank slope | 1:1 |
| Channel flowline slope | 15% |
| Design minimum freeboard (ft) | 0.5 |

| Outlet Layout | |
|---|---|
| Mannings n | 0.015 |
| Design Flow Depth (ft) | 0.26 |
| Design Freeboard (ft) | 0.74 |
| Design Flow Velocity (fps) | 12.70 |

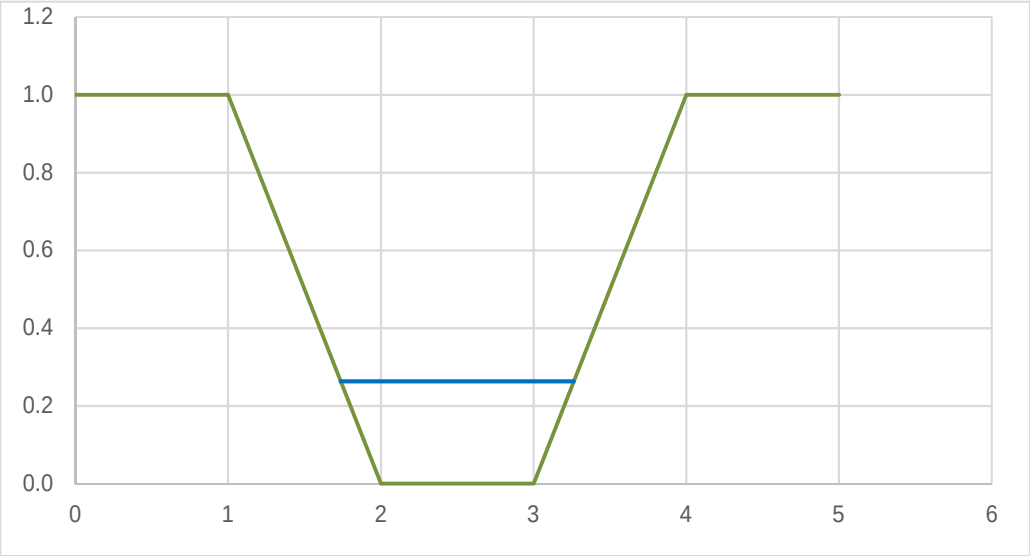

Ashley & Vance
ENGINEERING, INC

# Concrete Channel - Swale S4

| System Characteristics | |
|---|---|
| Design Flow Rate (cfs) | 43.4 |
| Channel bottom width | 3.0 |
| Channel depth | 2.0 |
| Channel bank slope | 1:1 |
| Channel flowline slope | 15% |
| Design minimum freeboard (ft) | 0.5 |

| Outlet Layout | |
|---|---|
| Mannings n | 0.015 |
| Design Flow Depth (ft) | 0.56 |
| Design Freeboard (ft) | 1.44 |
| Design Flow Velocity (fps) | 21.96 |

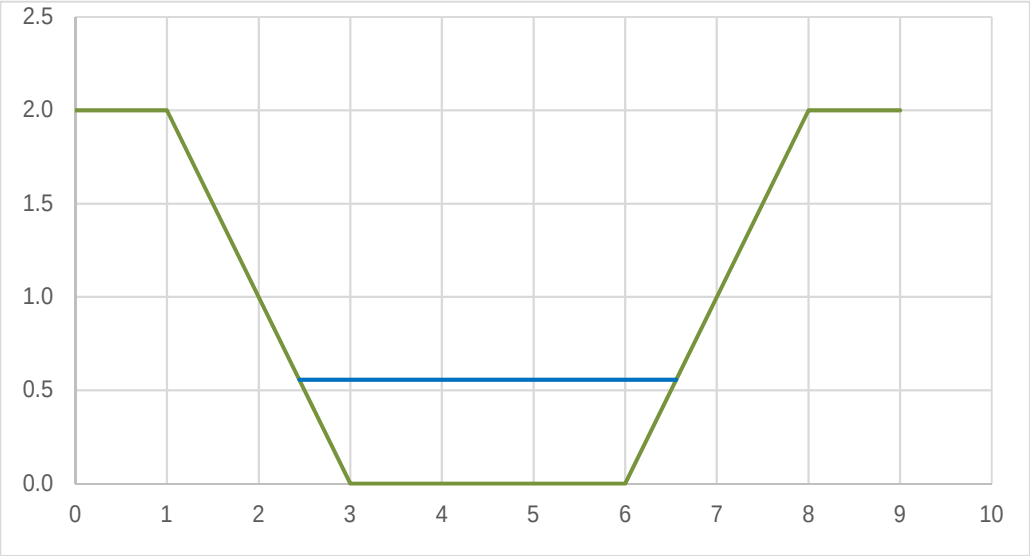

Ashley & Vance
ENGINEERING, INC

# Cobble Channel - Swale S5

| System Characteristics | |
|---|---|
| Design Flow Rate (cfs) | 26.0 |
| Channel bottom width | 3.0 |
| Channel depth | 2.0 |
| Channel bank slope | 1:1 |
| Channel flowline slope | 5% |
| Design minimum freeboard (ft) | 0.5 |

| Outlet Layout | |
|---|---|
| Mannings n | 0.040 |
| Design Flow Depth (ft) | 1.01 |
| Design Freeboard (ft) | 1.00 |
| Design Flow Velocity (fps) | 6.48 |

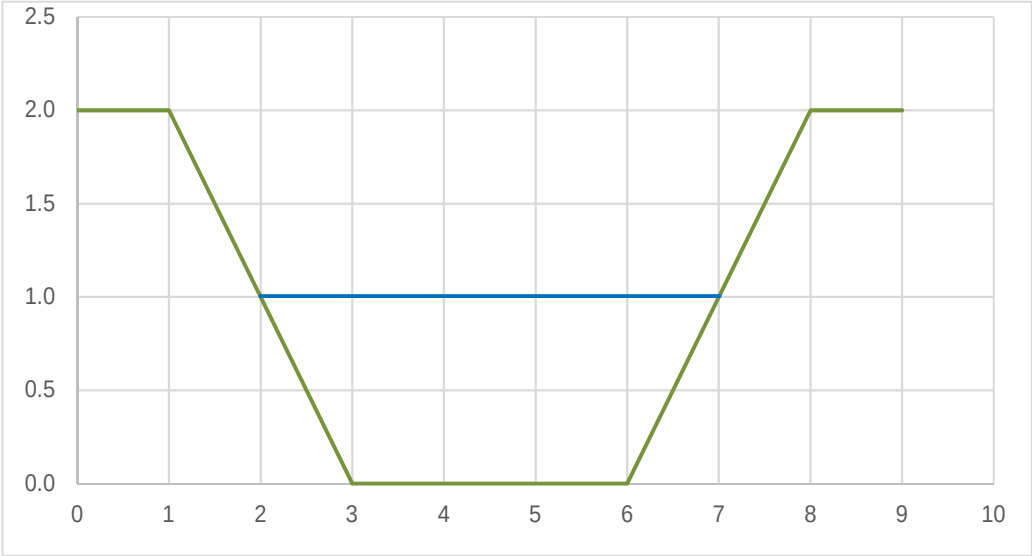

Ashley & Vance
ENGINEERING, INC

# Concrete Channel - Swale S6

| System Characteristics | |
|---|---|
| Design Flow Rate (cfs) | 24.1 |
| Channel bottom width | 3.0 |
| Channel depth | 2.0 |
| Channel bank slope | 1:1 |
| Channel flowline slope | 5% |
| Design minimum freeboard (ft) | 0.5 |

| Outlet Layout | |
|---|---|
| Mannings n | 0.016 |
| Design Flow Depth (ft) | 0.57 |
| Design Freeboard (ft) | 1.43 |
| Design Flow Velocity (fps) | 11.99 |

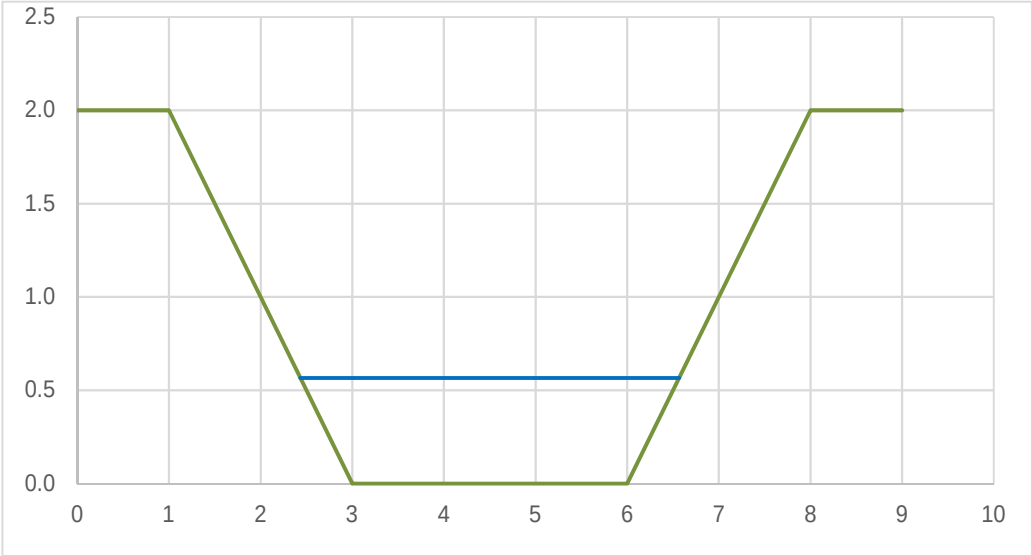

Ashley & Vance
ENGINEERING, INC

# Concrete Channel - Swale S7

| System Characteristics | |
|---|---|
| Design Flow Rate (cfs) | 4.2 |
| Channel bottom width | 1.0 |
| Channel depth | 1.0 |
| Channel bank slope | 1:1 |
| Channel flowline slope | 15% |
| Design minimum freeboard (ft) | 0.5 |

| Outlet Layout | |
|---|---|
| Mannings n | 0.015 |
| Design Flow Depth (ft) | 0.26 |
| Design Freeboard (ft) | 0.74 |
| Design Flow Velocity (fps) | 12.70 |

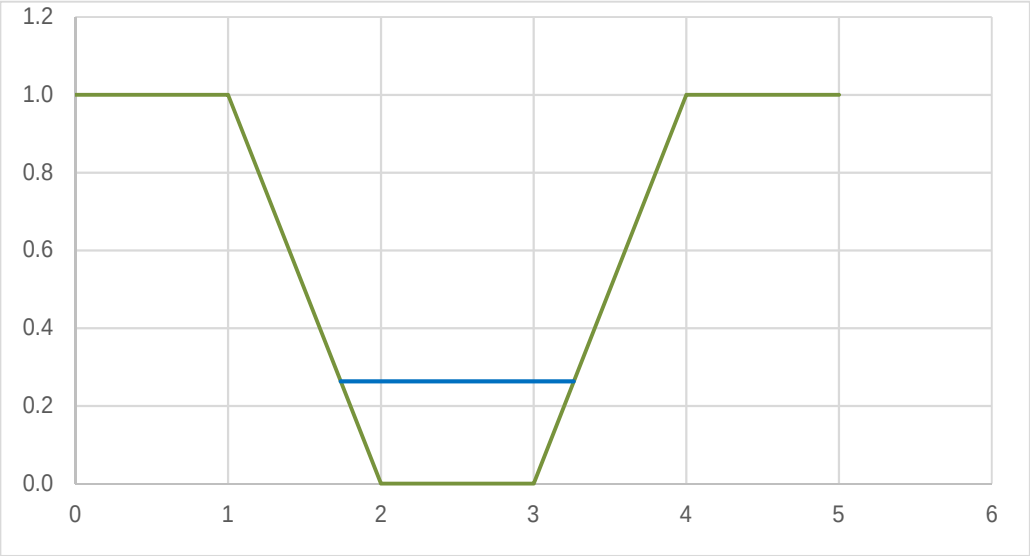

Ashley & Vance
ENGINEERING, INC

# Concrete Channel - Swale S8

| System Characteristics | |
|---|---|
| Design Flow Rate (cfs) | 28.3 |
| Channel bottom width | 3.0 |
| Channel depth | 2.0 |
| Channel bank slope | 1:1 |
| Channel flowline slope | 5% |
| Design minimum freeboard (ft) | 0.5 |

| Outlet Layout | |
|---|---|
| Mannings n | 0.016 |
| Design Flow Depth (ft) | 0.62 |
| Design Freeboard (ft) | 1.38 |
| Design Flow Velocity (fps) | 12.60 |

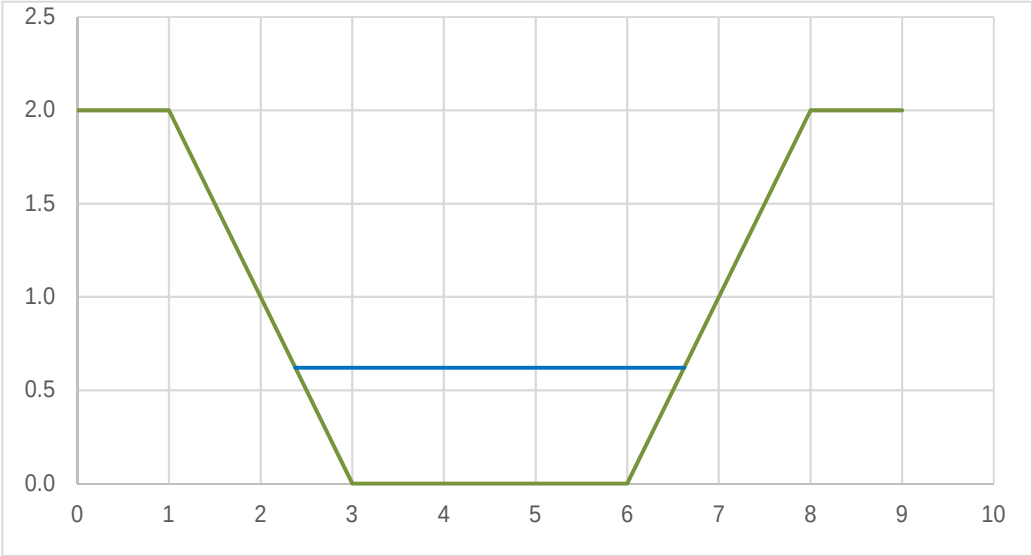

Ashley & Vance
ENGINEERING, INC

# Concrete Channel - Swale N1

| System Characteristics | |
|---|---|
| Design Flow Rate (cfs) | 26.0 |
| Channel bottom width | 3.0 |
| Channel depth | 2.0 |
| Channel bank slope | 1:1 |
| Channel flowline slope | 1% |
| Design minimum freeboard (ft) | 0.5 |

| Outlet Layout | |
|---|---|
| Mannings n | 0.015 |
| Design Flow Depth (ft) | 0.91 |
| Design Freeboard (ft) | 1.09 |
| Design Flow Velocity (fps) | 7.34 |

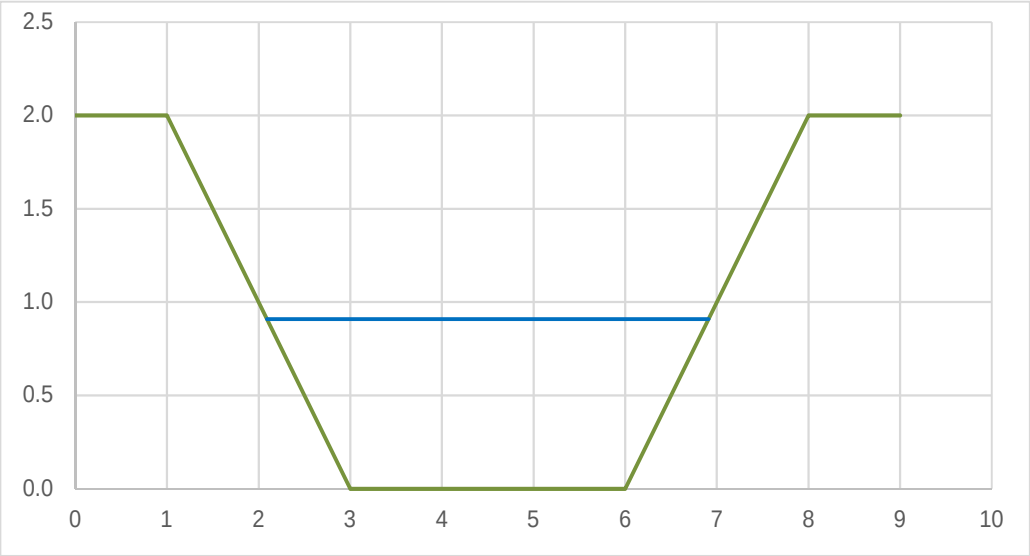

Ashley & Vance
ENGINEERING, INC

# Concrete Channel - Swale N2

| System Characteristics | |
|---|---|
| Design Flow Rate (cfs) | 2.5 |
| Channel bottom width | 1.0 |
| Channel depth | 1.0 |
| Channel bank slope | 1:1 |
| Channel flowline slope | 1% |
| Design minimum freeboard (ft) | 0.5 |

| Outlet Layout | |
|---|---|
| Mannings n | 0.015 |
| Design Flow Depth (ft) | 0.42 |
| Design Freeboard (ft) | 0.58 |
| Design Flow Velocity (fps) | 4.18 |

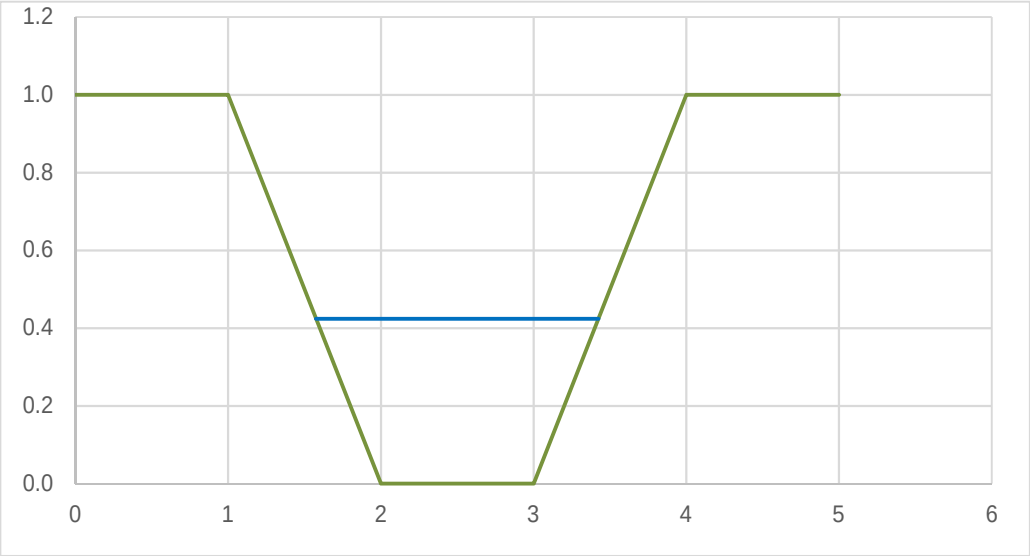

Ashley & Vance
ENGINEERING, INC

# Concrete Channel - Swale N3

| System Characteristics | |
|---|---|
| Design Flow Rate (cfs) | 1.2 |
| Channel bottom width | 1.0 |
| Channel depth | 1.0 |
| Channel bank slope | 1:1 |
| Channel flowline slope | 15% |
| Design minimum freeboard (ft) | 0.5 |

| Outlet Layout | |
|---|---|
| Mannings n | 0.015 |
| Design Flow Depth (ft) | 0.13 |
| Design Freeboard (ft) | 0.88 |
| Design Flow Velocity (fps) | 8.48 |

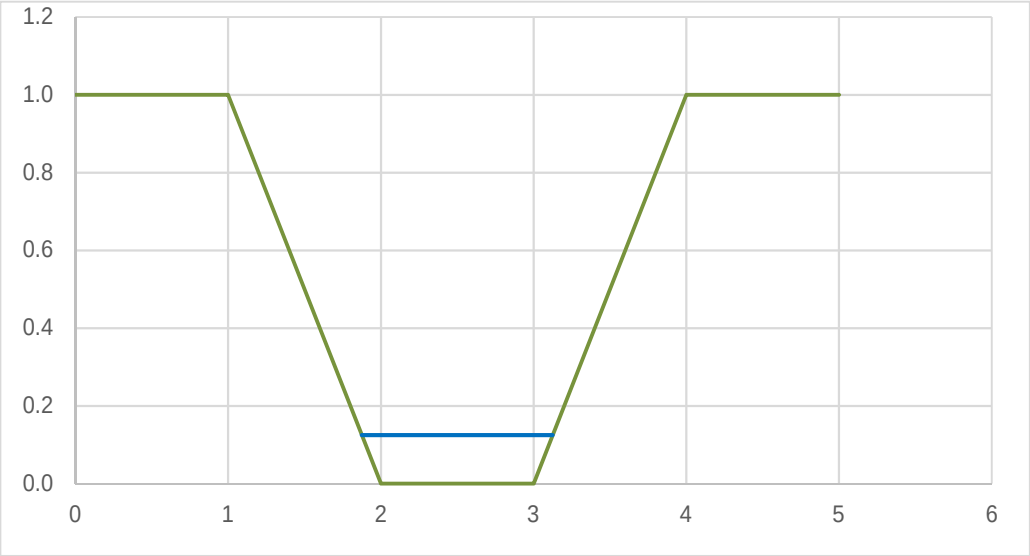

Ashley & Vance
ENGINEERING, INC

# Concrete Channel - Swale N4

| System Characteristics | |
|---|---|
| Design Flow Rate (cfs) | 30.6 |
| Channel bottom width | 3.0 |
| Channel depth | 2.0 |
| Channel bank slope | 1:1 |
| Channel flowline slope | 5% |
| Design minimum freeboard (ft) | 0.5 |

| Outlet Layout | |
|---|---|
| Mannings n | 0.015 |
| Design Flow Depth (ft) | 0.63 |
| Design Freeboard (ft) | 1.38 |
| Design Flow Velocity (fps) | 13.49 |

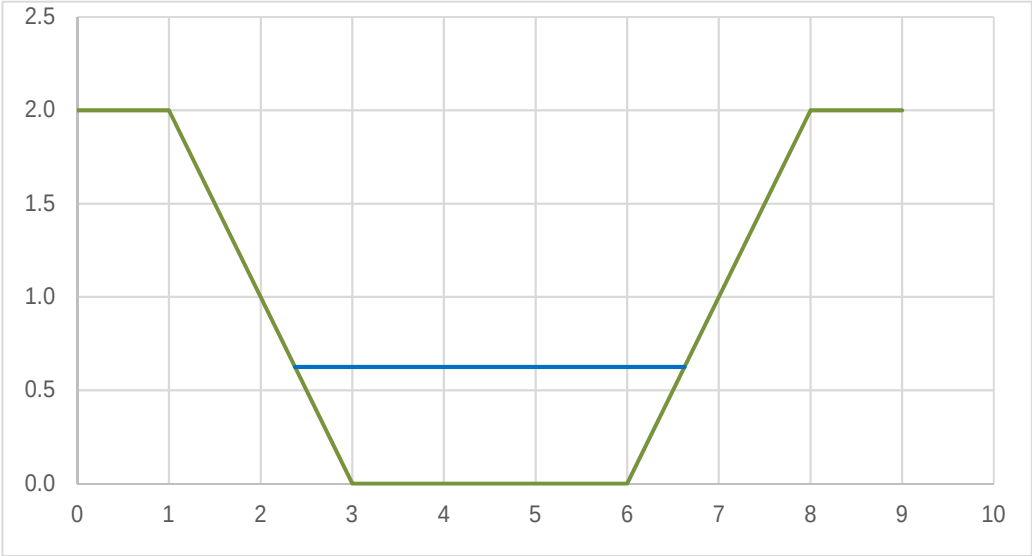

Ashley & Vance
ENGINEERING, INC

# Concrete Channel - Swale N5

| System Characteristics | |
|---|---|
| Design Flow Rate (cfs) | 1.4 |
| Channel bottom width | 1.0 |
| Channel depth | 1.0 |
| Channel bank slope | 1:1 |
| Channel flowline slope | 15% |
| Design minimum freeboard (ft) | 0.5 |

| Outlet Layout | |
|---|---|
| Mannings n | 0.015 |
| Design Flow Depth (ft) | 0.14 |
| Design Freeboard (ft) | 0.86 |
| Design Flow Velocity (fps) | 8.89 |

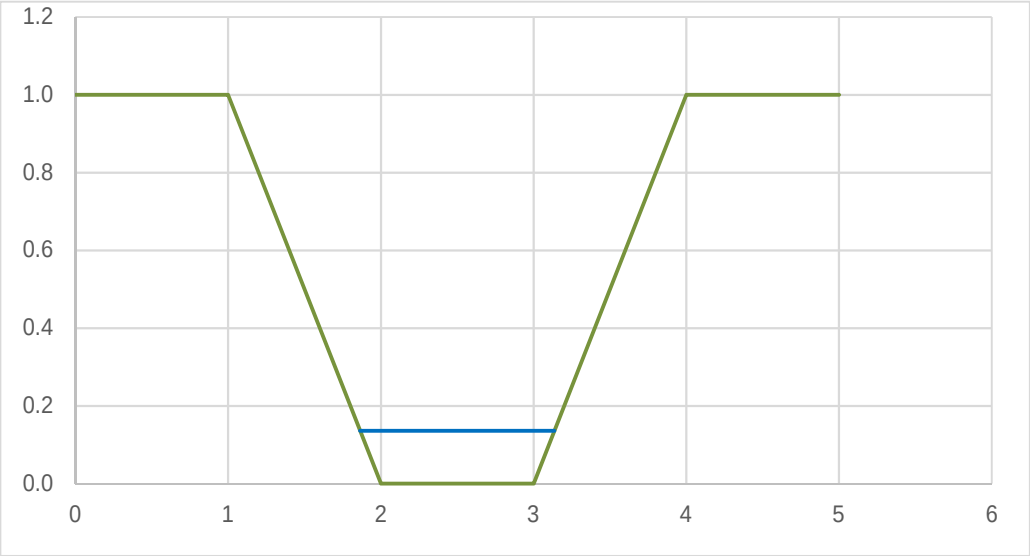

# Inlet Report

Hydraflow Express Extension for Autodesk® AutoCAD® Civil 3D® by Autodesk, Inc. Tuesday, Jul 30 2019

## Catch Basin B

**Drop Grate Inlet**

| | | |
|---|---|---|
| Location | = | On grade |
| Curb Length (ft) | = | -0- |
| Throat Height (in) | = | -0- |
| Grate Area (sqft) | = | -0- |
| Grate Width (ft) | = | 3.00 |
| Grate Length (ft) | = | 3.00 |

**Gutter**

| | | |
|---|---|---|
| Slope, Sw (ft/ft) | = | 1.000 |
| Slope, Sx (ft/ft) | = | 1.000 |
| Local Depr (in) | = | -0- |
| Gutter Width (ft) | = | 3.00 |
| Gutter Slope (%) | = | 5.00 |
| Gutter n-value | = | 0.016 |

**Calculations**

| | | |
|---|---|---|
| Compute by: | | Known Q |
| Q (cfs) | = | 48.43 |

**Highlighted**

| | | |
|---|---|---|
| Q Total (cfs) | = | 48.43 |
| Q Capt (cfs) | = | 41.96 |
| Q Bypass (cfs) | = | 6.47 |
| Depth at Inlet (in) | = | 10.20 |
| Efficiency (%) | = | 87 |
| Gutter Spread (ft) | = | 4.70 |
| Gutter Vel (ft/s) | = | 14.80 |
| Bypass Spread (ft) | = | 3.52 |
| Bypass Depth (in) | = | 3.12 |

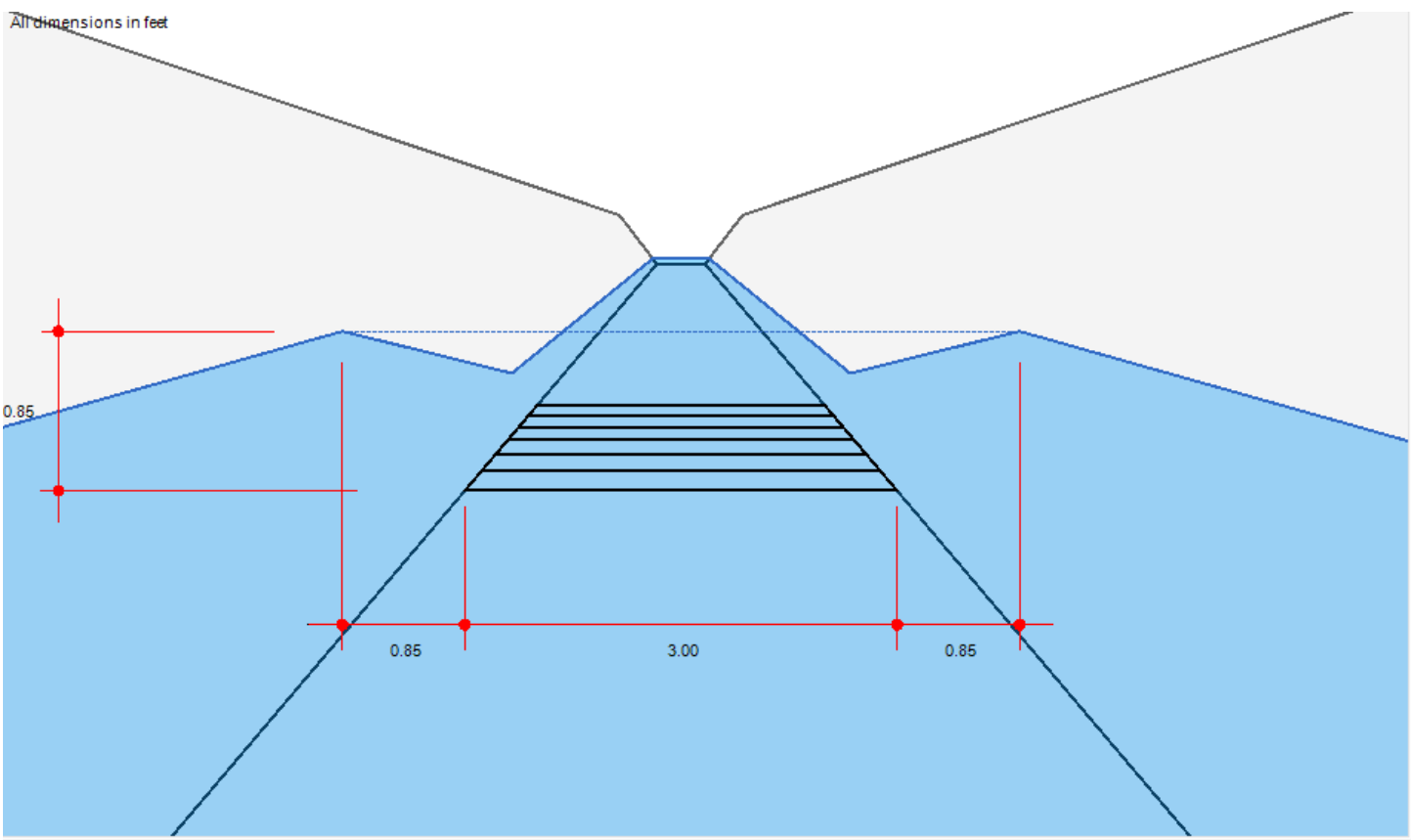

# Inlet Report

Hydraflow Express Extension for Autodesk® AutoCAD® Civil 3D® by Autodesk, Inc. Tuesday, Jul 30 2019

## Catch Basin C

**Drop Grate Inlet**

| | | |
|---|---|---|
| Location | = | Sag |
| Curb Length (ft) | = | -0- |
| Throat Height (in) | = | -0- |
| Grate Area (sqft) | = | 8.00 |
| Grate Width (ft) | = | 3.00 |
| Grate Length (ft) | = | 3.00 |

**Gutter**

| | | |
|---|---|---|
| Slope, Sw (ft/ft) | = | 1.000 |
| Slope, Sx (ft/ft) | = | 1.000 |
| Local Depr (in) | = | -0- |
| Gutter Width (ft) | = | 3.00 |
| Gutter Slope (%) | = | -0- |
| Gutter n-value | = | -0- |

**Calculations**

| | | |
|---|---|---|
| Compute by: | | Known Q |
| Q (cfs) | = | 28.33 |

**Highlighted**

| | | |
|---|---|---|
| Q Total (cfs) | = | 28.33 |
| Q Capt (cfs) | = | 28.33 |
| Q Bypass (cfs) | = | -0- |
| Depth at Inlet (in) | = | 10.23 |
| Efficiency (%) | = | 100 |
| Gutter Spread (ft) | = | 4.70 |
| Gutter Vel (ft/s) | = | -0- |
| Bypass Spread (ft) | = | -0- |
| Bypass Depth (in) | = | -0- |

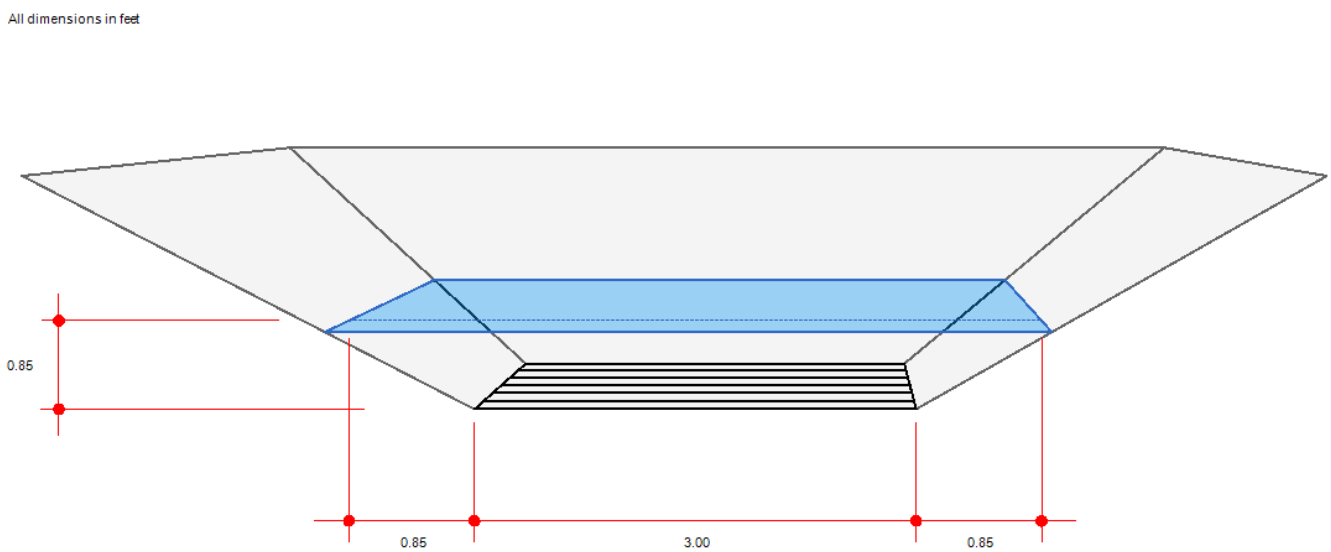

# Channel Report

Hydraflow Express Extension for Autodesk® AutoCAD® Civil 3D® by Autodesk, Inc. Tuesday, Jul 30 2019

## Stormdrain B

**Circular**

| | |
|---|---|
| Diameter (ft) | = 2.00 |
| Invert Elev (ft) | = 80.67 |
| Slope (%) | = 1.10 |
| N-Value | = 0.012 |

**Calculations**

| | |
|---|---|
| Compute by: | Q vs Depth |
| No. Increments | = 10 |

**Highlighted**

| | |
|---|---|
| Depth (ft) | = 2.00 |
| Q (cfs) | = 25.70 |
| Area (sqft) | = 3.14 |
| Velocity (ft/s) | = 8.18 |
| Wetted Perim (ft) | = 6.28 |
| Crit Depth, Yc (ft) | = 1.78 |
| Top Width (ft) | = 0.00 |
| EGL (ft) | = 3.04 |

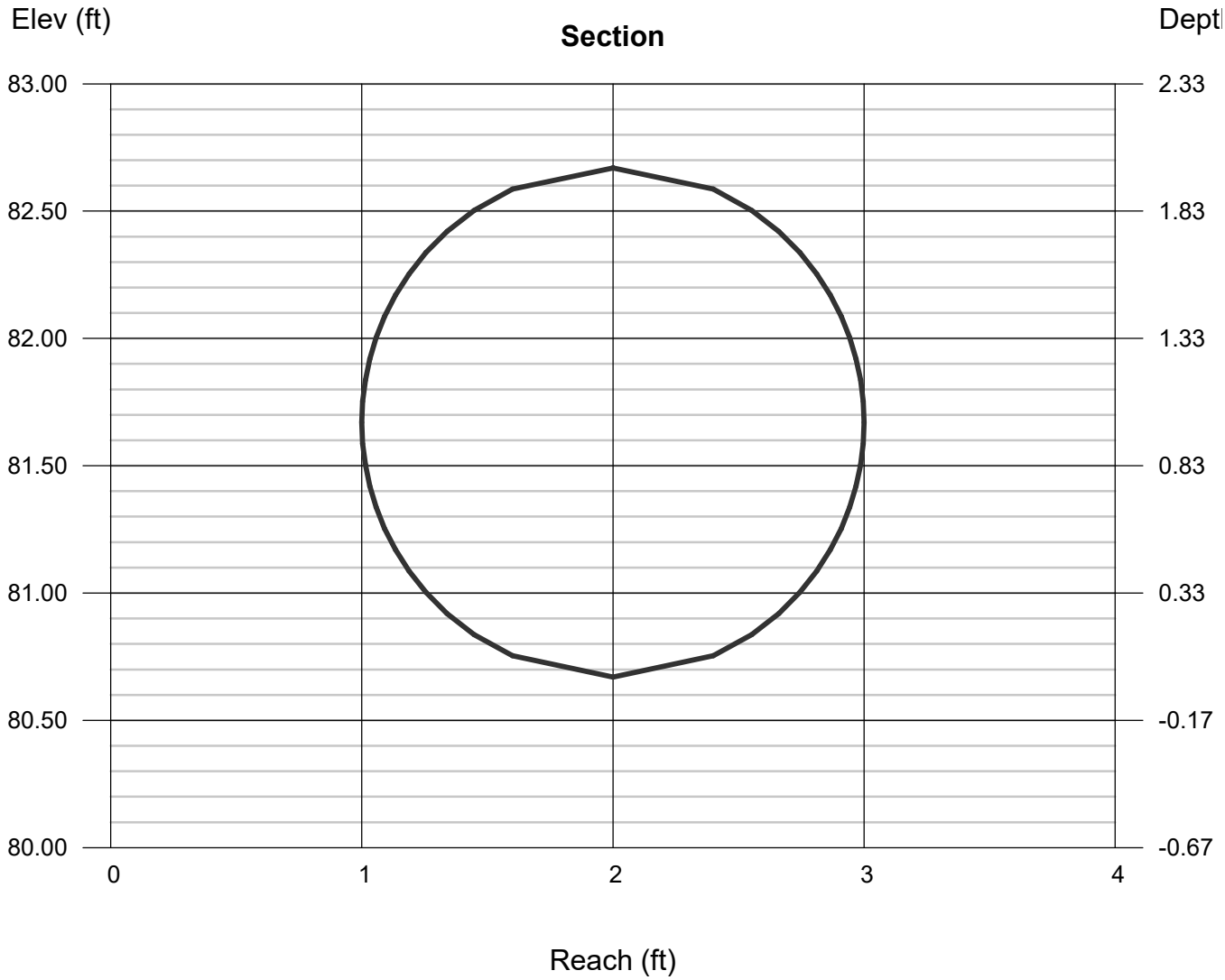

BLACK & VEATCH
Corporation

# PIPELINE HEADLOSS DESIGN

**Project Number:** 400530
**Pipeline Design For:** Storm Drain C
**Engineer:** EVB

*Design and K Values per Headloss (Hazen-Williams) Gray Book I.D. EM-405.00*

| FLOW CHARACTERISTICS | | | | |
|---|---|---|---|---|
| Flowrate (Q) = | 12701.92 | gpm | 1698.00 | ft^3/min |
| Diameter (D) = | 24 | inches | 2.00 | ft |
| Area (A) = | 452.39 | in^2 | 3.14 | ft^2 |
| Velocity (V) = | 540.49 | ft/min | 9.01 | ft/s |
| Hydraulic Radius (Rh) = | 6 | inches | 0.50 | ft |
| Hazen-Williams Coeff. (c) = | 150 | PVC | | |
| Length of Pipe (L) = | 51 | ft | | |
| Head per unit Length of Pipe (S) = | 0.0074 | ft/ft | | |
| Headloss per 1000 ft = | 7.3652 | ft | Time (s) = | 6 |

| SYSTEM CHARACTERISTICS | |
|---|---|
| Upstream HGL, ft = | 80.03 |
| Downstream HGL, ft = | 76.50 |
| Residual Pressure, ft = | 0.00 |

rim el in CB C = 81.00
appx 1 ft freeboad in CM to rim
works correctly as full-pipe flow

| HEADLOSS SUMMARY | | |
|---|---|---|
| Design Margin of Safety = | 0% | |
| | **ft** | **psi** |
| Piping Loses = | 0.38 | 0.16 |
| Hydraulic Lift = | 0.00 | 0.00 |
| Fitting & Valve Losses= | 3.15 | 1.37 |
| | | |
| | | 0.00 |
| Total Headloss = | 3.53 | 1.53 |
| **Total Headloss with Design Margin =** | **3.53** | **1.53** |

headloss from inside catch basin to channel of level-spreader C

| C-Values of Pipe Materials |
|---|
| C = 40 Badly tuberculated |
| C = 60 Very rough |
| C = 80 Old Iron |
| C = 100 Ordinary Iron or Concrete |
| C = 120 Smooth New Iron or Steel |
| C = 140 Very smooth brass or plastic |

# Channel Report

Hydraflow Express Extension for Autodesk® AutoCAD® Civil 3D® by Autodesk, Inc. Tuesday, Jul 30 2019

## P1

**Circular**

| | | |
|---|---|---|
| Diameter (ft) | = | 1.50 |
| Invert Elev (ft) | = | 101.00 |
| Slope (%) | = | 8.70 |
| N-Value | = | 0.012 |

**Calculations**

| | | |
|---|---|---|
| Compute by: | | Known Q |
| Known Q (cfs) | = | 2.42 |

**Highlighted**

| | | |
|---|---|---|
| Depth (ft) | = | 0.28 |
| Q (cfs) | = | 2.420 |
| Area (sqft) | = | 0.23 |
| Velocity (ft/s) | = | 10.57 |
| Wetted Perim (ft) | = | 1.34 |
| Crit Depth, Yc (ft) | = | 0.59 |
| Top Width (ft) | = | 1.17 |
| EGL (ft) | = | 2.02 |

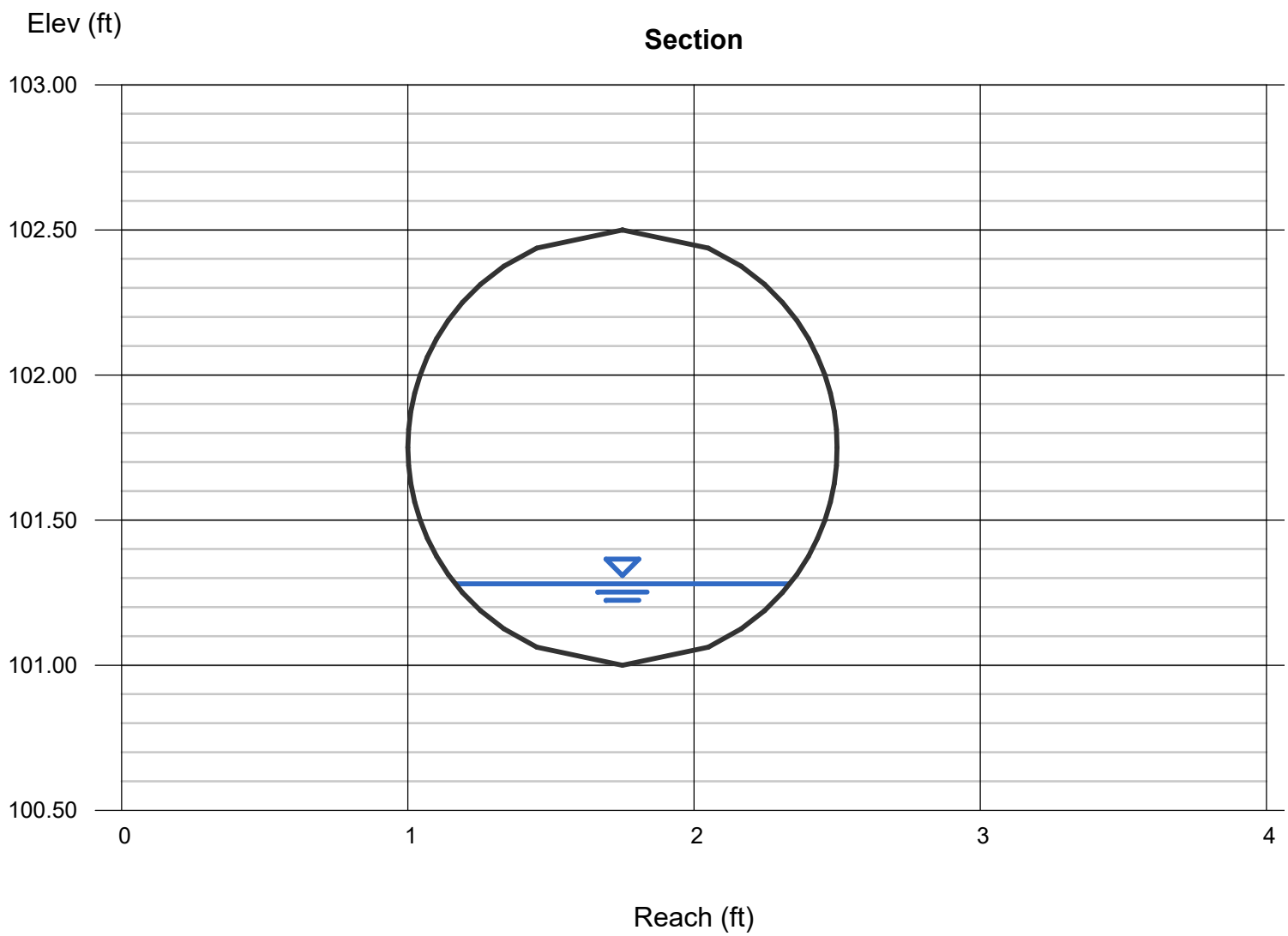

# Channel Report

Hydraflow Express Extension for Autodesk® AutoCAD® Civil 3D® by Autodesk, Inc. Tuesday, Jul 30 2019

## P2

**Circular**

| | | |
|---|---|---|
| Diameter (ft) | = | 1.50 |
| Invert Elev (ft) | = | 75.50 |
| Slope (%) | = | 1.20 |
| N-Value | = | 0.012 |

**Calculations**

| | | |
|---|---|---|
| Compute by: | | Known Q |
| Known Q (cfs) | = | 5.31 |

**Highlighted**

| | | |
|---|---|---|
| Depth (ft) | = | 0.69 |
| Q (cfs) | = | 5.310 |
| Area (sqft) | = | 0.80 |
| Velocity (ft/s) | = | 6.65 |
| Wetted Perim (ft) | = | 2.24 |
| Crit Depth, Yc (ft) | = | 0.89 |
| Top Width (ft) | = | 1.50 |
| EGL (ft) | = | 1.38 |

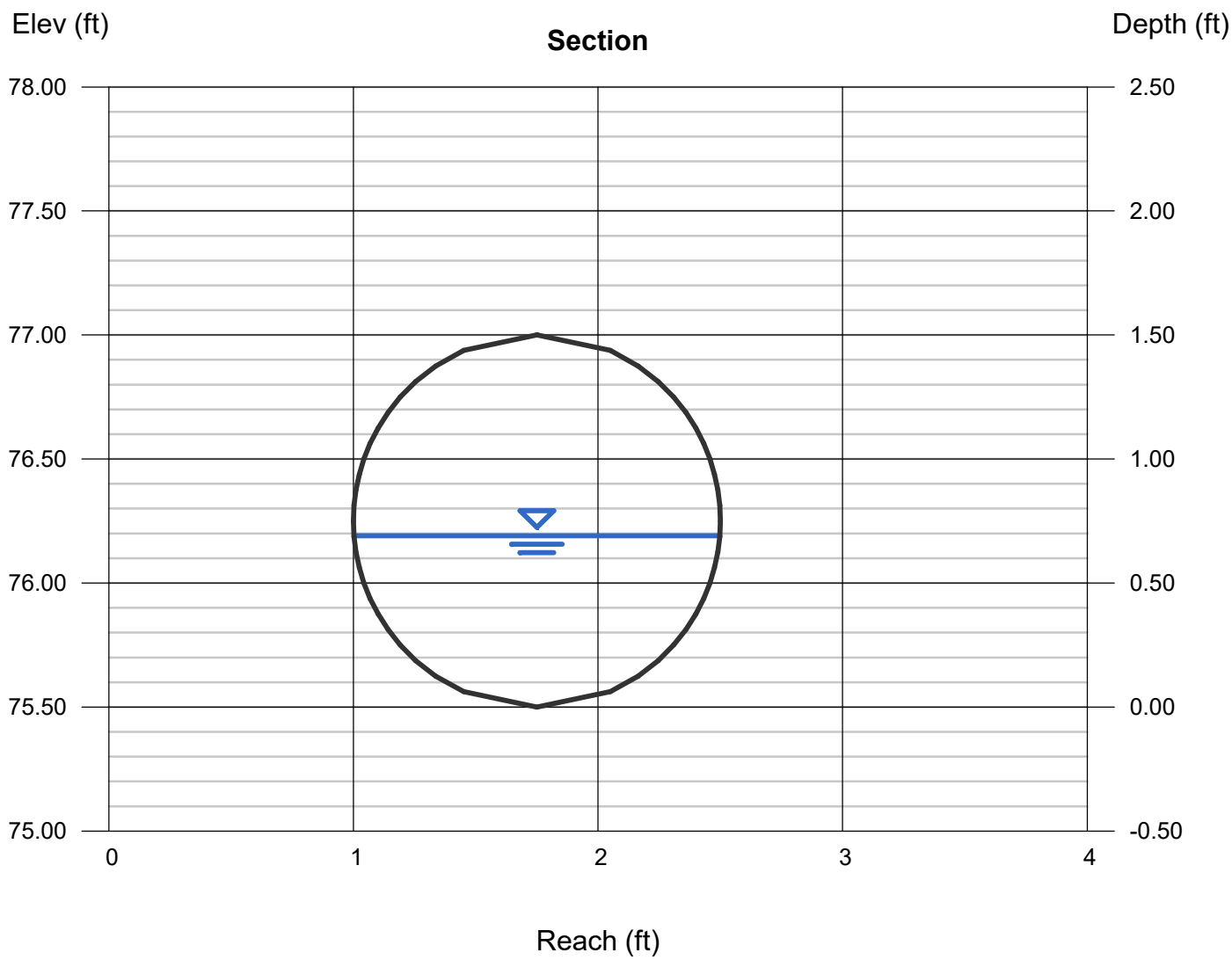

Ashley & Vance
ENGINEERING, INC

# Level Spreader A

| System Characteristics | |
|---|---|
| Discharge Pipe Size | 24-inch |
| Outlet Design Flow Rate (cfs) | 32.0 |
| Weir Coefficient for Level Spreader | 3.0 |
| Downslope Soil Type | Clay |
| Downslope Cover Type | Native |
| Downslope Average Grade | 10+ |

| Outlet Layout | |
|---|---|
| Allowable Overland Velocity (fps) | 3.75 |
| Maximum Velocity over Spreader (fps) | 2.00 |
| Maximum Driving Head (ft) | 0.198 |
| Maximum Depth Over Spreader (ft) | 0.132 |
| Level Spreader Length (ft) | 122.0 |
| Level Spreader Width (in) | 72.0 |
| Rock Thickness (in) | 24 |
| Nominal rock diameter (in) | 9" d50 |

| Rock Gradation | |
|---|---|
| 100% less than | 15 |
| 50-70% less than | 12 |
| 35-50% less than | 9 |
| 2-10% less than | 3 |

Ashley & Vance
ENGINEERING, INC

# Level Spreader B

| System Characteristics | |
|---|---|
| Discharge Pipe Size | 24-inch |
| Outlet Design Flow Rate (cfs) | 25.7 |
| Weir Coefficient for Level Spreader | 3.0 |
| Downslope Soil Type | Clay |
| Downslope Cover Type | Native |
| Downslope Average Grade | 10+ |

| Outlet Layout | |
|---|---|
| Allowable Overland Velocity (fps) | 3.75 |
| Maximum Velocity over Spreader (fps) | 1.60 |
| Maximum Driving Head (ft) | 0.126 |
| Maximum Depth Over Spreader (ft) | 0.084 |
| Level Spreader Length (ft) | 191.0 |
| Level Spreader Width (in) | 72.0 |
| Rock Thickness (in) | 24 |
| Nominal rock diameter (in) | 9" d50 |

| Rock Gradation | |
|---|---|
| 100% less than | 15 |
| 50-70% less than | 12 |
| 35-50% less than | 9 |
| 2-10% less than | 3 |

Ashley & Vance
ENGINEERING, INC

# Level Spreader C

| System Characteristics | |
|---|---|
| Discharge Pipe Size | 24-inch |
| Outlet Design Flow Rate (cfs) | 33.6 |
| Weir Coefficient for Level Spreader | 3.0 |
| Downslope Soil Type | Clay |
| Downslope Cover Type | Native |
| Downslope Average Grade | 10+ |

| Outlet Layout | |
|---|---|
| Allowable Overland Velocity (fps) | 3.75 |
| Maximum Velocity over Spreader (fps) | 1.75 |
| Maximum Driving Head (ft) | 0.151 |
| Maximum Depth Over Spreader (ft) | 0.101 |
| Level Spreader Length (ft) | 191.0 |
| Level Spreader Width (in) | 72.0 |
| Rock Thickness (in) | 24 |
| Nominal rock diameter (in) | 9" d50 |

| Rock Gradation | |
|---|---|
| 100% less than | 15 |
| 50-70% less than | 12 |
| 35-50% less than | 9 |
| 2-10% less than | 3 |

Ashley & Vance
ENGINEERING, INC

# Level Spreader D

| System Characteristics | |
|---|---|
| Discharge Pipe Size | 24-inch |
| Outlet Design Flow Rate (cfs) | 2.4 |
| Weir Coefficient for Level Spreader | 3.0 |
| Downslope Soil Type | Clay |
| Downslope Cover Type | Native |
| Downslope Average Grade | 10+ |

| Outlet Layout | |
|---|---|
| Allowable Overland Velocity (fps) | 3.75 |
| Maximum Velocity over Spreader (fps) | 1.50 |
| Maximum Driving Head (ft) | 0.111 |
| Maximum Depth Over Spreader (ft) | 0.074 |
| Level Spreader Length (ft) | 22.0 |
| Level Spreader Width (in) | 72.0 |
| Rock Thickness (in) | 24 |
| Nominal rock diameter (in) | 9" d50 |

| Rock Gradation | |
|---|---|
| 100% less than | 15 |
| 50-70% less than | 12 |
| 35-50% less than | 9 |
| 2-10% less than | 3 |

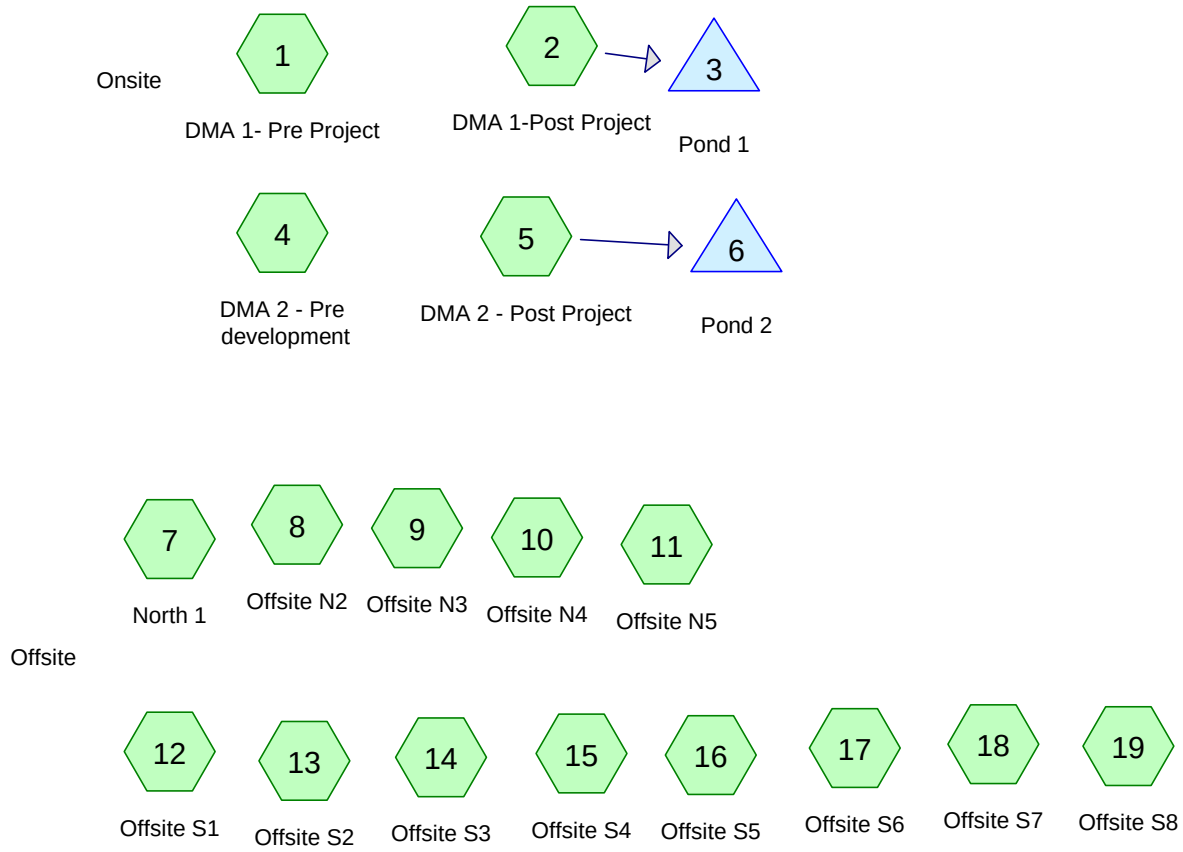


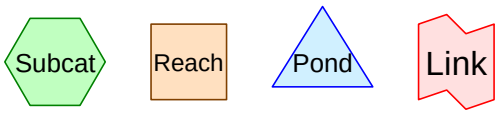


**Routing Diagram for HydroCAD_SBUH_Template_MORRO BAY**
Prepared by Ashley & Vance Engineering Inc., Printed 7/30/2019
HydroCAD® 10.00-22 s/n 09644 © 2018 HydroCAD Software Solutions LLC

## Summary for Subcatchment 1: DMA 1- Pre Project

Runoff = 0.58 cfs @ 9.98 hrs, Volume= 4,495 cf, Depth= 0.66"

Runoff by SBUH method, Split Pervious/Imperv., Time Span= 0.00-72.00 hrs, dt= 0.01 hrs
Type I 24-hr 2-Year Rainfall=2.29"

| | Area (ac) | CN | Description |
|---|---|---|---|
| * | 1.890 | 78 | |
| | 1.890 | 78 | 100.00% Pervious Area |

| Tc (min) | Length (feet) | Slope (ft/ft) | Velocity (ft/sec) | Capacity (cfs) | Description |
|---|---|---|---|---|---|
| 10.0 | | | | | **Direct Entry,** |

## Summary for Subcatchment 2: DMA 1-Post Project

Runoff = 1.58 cfs @ 9.96 hrs, Volume= 9,903 cf, Depth= 1.67"

Runoff by SBUH method, Split Pervious/Imperv., Time Span= 0.00-72.00 hrs, dt= 0.01 hrs
Type I 24-hr 2-Year Rainfall=2.29"

| | Area (ac) | CN | Description |
|---|---|---|---|
| * | 1.180 | 98 | |
| * | 0.450 | 78 | |
| | 1.630 | 92 | Weighted Average |
| | 0.450 | 78 | 27.61% Pervious Area |
| | 1.180 | 98 | 72.39% Impervious Area |

| Tc (min) | Length (feet) | Slope (ft/ft) | Velocity (ft/sec) | Capacity (cfs) | Description |
|---|---|---|---|---|---|
| 10.0 | | | | | **Direct Entry,** |

## Summary for Subcatchment 4: DMA 2 - Pre development

Runoff = 1.36 cfs @ 9.97 hrs, Volume= 10,165 cf, Depth= 0.70"

Runoff by SBUH method, Split Pervious/Imperv., Time Span= 0.00-72.00 hrs, dt= 0.01 hrs
Type I 24-hr 2-Year Rainfall=2.29"

| | Area (ac) | CN | Description |
|---|---|---|---|
| * | 3.320 | 79 | Pasture/grassland/range, Fair, HSG D |
| * | 0.680 | 79 | |
| | 4.000 | 79 | Weighted Average |
| | 4.000 | 79 | 100.00% Pervious Area |

| Tc (min) | Length (feet) | Slope (ft/ft) | Velocity (ft/sec) | Capacity (cfs) | Description |
|---|---|---|---|---|---|
| 10.0 | | | | | **Direct Entry,** |

## Summary for Subcatchment 5: DMA 2 - Post Project

Runoff = 4.28 cfs @ 9.96 hrs, Volume= 26,579 cf, Depth= 1.83"

Runoff by SBUH method, Split Pervious/Imperv., Time Span= 0.00-72.00 hrs, dt= 0.01 hrs
Type I 24-hr 2-Year Rainfall=2.29"

| | Area (ac) | CN | Description |
|---|---|---|---|
| * | 3.320 | 98 | Pasture/grassland/range, Fair, HSG D |
| * | 0.680 | 79 | |
| | 4.000 | 95 | Weighted Average |
| | 0.680 | 79 | 17.00% Pervious Area |
| | 3.320 | 98 | 83.00% Impervious Area |

| Tc (min) | Length (feet) | Slope (ft/ft) | Velocity (ft/sec) | Capacity (cfs) | Description |
|---|---|---|---|---|---|
| 10.0 | | | | | **Direct Entry,** |

## Summary for Subcatchment 7: North 1

Runoff = 2.84 cfs @ 9.98 hrs, Volume= 22,118 cf, Depth= 0.66"

Runoff by SBUH method, Split Pervious/Imperv., Time Span= 0.00-72.00 hrs, dt= 0.01 hrs
Type I 24-hr 2-Year Rainfall=2.29"

| | Area (ac) | CN | Description |
|---|---|---|---|
| * | 9.300 | 78 | |
| | 9.300 | 78 | 100.00% Pervious Area |

| Tc (min) | Length (feet) | Slope (ft/ft) | Velocity (ft/sec) | Capacity (cfs) | Description |
|---|---|---|---|---|---|
| 10.0 | | | | | **Direct Entry,** |

## Summary for Subcatchment 8: Offsite N2

Runoff = 0.13 cfs @ 9.98 hrs, Volume= 999 cf, Depth= 0.66"

Runoff by SBUH method, Split Pervious/Imperv., Time Span= 0.00-72.00 hrs, dt= 0.01 hrs
Type I 24-hr 2-Year Rainfall=2.29"

| | Area (ac) | CN | Description |
|---|---|---|---|
| * | 0.420 | 78 | |
| | 0.420 | 78 | 100.00% Pervious Area |

| Tc (min) | Length (feet) | Slope (ft/ft) | Velocity (ft/sec) | Capacity (cfs) | Description |
|---|---|---|---|---|---|
| 10.0 | | | | | **Direct Entry,** |

## Summary for Subcatchment 9: Offsite N3

Runoff = 0.27 cfs @ 9.98 hrs, Volume= 2,140 cf, Depth= 0.66"

Runoff by SBUH method, Split Pervious/Imperv., Time Span= 0.00-72.00 hrs, dt= 0.01 hrs
Type I 24-hr 2-Year Rainfall=2.29"

| | Area (ac) | CN | Description |
|---|---|---|---|
| * | 0.900 | 78 | |
| | 0.900 | 78 | 100.00% Pervious Area |

| Tc (min) | Length (feet) | Slope (ft/ft) | Velocity (ft/sec) | Capacity (cfs) | Description |
|---|---|---|---|---|---|
| 10.0 | | | | | **Direct Entry,** |

## Summary for Subcatchment 10: Offsite N4

Runoff = 0.15 cfs @ 9.98 hrs, Volume= 1,165 cf, Depth= 0.66"

Runoff by SBUH method, Split Pervious/Imperv., Time Span= 0.00-72.00 hrs, dt= 0.01 hrs
Type I 24-hr 2-Year Rainfall=2.29"

| | Area (ac) | CN | Description |
|---|---|---|---|
| * | 0.490 | 78 | |
| | 0.490 | 78 | 100.00% Pervious Area |

| Tc (min) | Length (feet) | Slope (ft/ft) | Velocity (ft/sec) | Capacity (cfs) | Description |
|---|---|---|---|---|---|
| 10.0 | | | | | **Direct Entry,** |

## Summary for Subcatchment 11: Offsite N5

Runoff = 0.09 cfs @ 9.98 hrs, Volume= 690 cf, Depth= 0.66"

Runoff by SBUH method, Split Pervious/Imperv., Time Span= 0.00-72.00 hrs, dt= 0.01 hrs
Type I 24-hr 2-Year Rainfall=2.29"

| | Area (ac) | CN | Description |
|---|---|---|---|
| * | 0.290 | 78 | |
| | 0.290 | 78 | 100.00% Pervious Area |

| Tc (min) | Length (feet) | Slope (ft/ft) | Velocity (ft/sec) | Capacity (cfs) | Description |
|---|---|---|---|---|---|
| 10.0 | | | | | **Direct Entry,** |

## Summary for Subcatchment 12: Offsite S1

Runoff = 3.32 cfs @ 9.98 hrs, Volume= 25,924 cf, Depth= 0.66"

Runoff by SBUH method, Split Pervious/Imperv., Time Span= 0.00-72.00 hrs, dt= 0.01 hrs
Type I 24-hr 2-Year Rainfall=2.29"

| | Area (ac) | CN | Description |
|---|---|---|---|
| * | 10.900 | 78 | |
| | 10.900 | 78 | 100.00% Pervious Area |

| Tc (min) | Length (feet) | Slope (ft/ft) | Velocity (ft/sec) | Capacity (cfs) | Description |
|---|---|---|---|---|---|
| 10.0 | | | | | **Direct Entry,** |

## Summary for Subcatchment 13: Offsite S2

Runoff = 0.37 cfs @ 9.98 hrs, Volume= 2,854 cf, Depth= 0.66"

Runoff by SBUH method, Split Pervious/Imperv., Time Span= 0.00-72.00 hrs, dt= 0.01 hrs
Type I 24-hr 2-Year Rainfall=2.29"

| | Area (ac) | CN | Description |
|---|---|---|---|
| * | 1.200 | 78 | |
| | 1.200 | 78 | 100.00% Pervious Area |

| Tc (min) | Length (feet) | Slope (ft/ft) | Velocity (ft/sec) | Capacity (cfs) | Description |
|---|---|---|---|---|---|
| 10.0 | | | | | **Direct Entry,** |

## Summary for Subcatchment 14: Offsite S3

Runoff = 0.30 cfs @ 9.98 hrs, Volume= 2,307 cf, Depth= 0.66"

Runoff by SBUH method, Split Pervious/Imperv., Time Span= 0.00-72.00 hrs, dt= 0.01 hrs
Type I 24-hr 2-Year Rainfall=2.29"

| | Area (ac) | CN | Description |
|---|---|---|---|
| * | 0.970 | 78 | |
| | 0.970 | 78 | 100.00% Pervious Area |

| Tc (min) | Length (feet) | Slope (ft/ft) | Velocity (ft/sec) | Capacity (cfs) | Description |
|---|---|---|---|---|---|
| 10.0 | | | | | **Direct Entry,** |

## Summary for Subcatchment 15: Offsite S4

Runoff = 0.25 cfs @ 9.98 hrs, Volume= 1,950 cf, Depth= 0.66"

Runoff by SBUH method, Split Pervious/Imperv., Time Span= 0.00-72.00 hrs, dt= 0.01 hrs
Type I 24-hr 2-Year Rainfall=2.29"

| | Area (ac) | CN | Description |
|---|---|---|---|
| * | 0.820 | 78 | |
| | 0.820 | 78 | 100.00% Pervious Area |

| Tc (min) | Length (feet) | Slope (ft/ft) | Velocity (ft/sec) | Capacity (cfs) | Description |
|---|---|---|---|---|---|
| 10.0 | | | | | **Direct Entry,** |

## Summary for Subcatchment 16: Offsite S5

Runoff = 0.46 cfs @ 9.98 hrs, Volume= 3,567 cf, Depth= 0.66"

Runoff by SBUH method, Split Pervious/Imperv., Time Span= 0.00-72.00 hrs, dt= 0.01 hrs
Type I 24-hr 2-Year Rainfall=2.29"

| | Area (ac) | CN | Description |
|---|---|---|---|
| * | 1.500 | 78 | |
| | 1.500 | 78 | 100.00% Pervious Area |

| Tc (min) | Length (feet) | Slope (ft/ft) | Velocity (ft/sec) | Capacity (cfs) | Description |
|---|---|---|---|---|---|
| 10.0 | | | | | **Direct Entry,** |

## Summary for Subcatchment 17: Offsite S6

Runoff = 0.15 cfs @ 9.98 hrs, Volume= 1,189 cf, Depth= 0.66"

Runoff by SBUH method, Split Pervious/Imperv., Time Span= 0.00-72.00 hrs, dt= 0.01 hrs
Type I 24-hr 2-Year Rainfall=2.29"

| | Area (ac) | CN | Description |
|---|---|---|---|
| * | 0.500 | 78 | |
| | 0.500 | 78 | 100.00% Pervious Area |

| Tc (min) | Length (feet) | Slope (ft/ft) | Velocity (ft/sec) | Capacity (cfs) | Description |
|---|---|---|---|---|---|
| 10.0 | | | | | **Direct Entry,** |

## Summary for Subcatchment 18: Offsite S7

Runoff = 0.46 cfs @ 9.98 hrs, Volume= 3,567 cf, Depth= 0.66"

Runoff by SBUH method, Split Pervious/Imperv., Time Span= 0.00-72.00 hrs, dt= 0.01 hrs
Type I 24-hr 2-Year Rainfall=2.29"

| | Area (ac) | CN | Description |
|---|---|---|---|
| * | 1.500 | 78 | |
| | 1.500 | 78 | 100.00% Pervious Area |

| Tc (min) | Length (feet) | Slope (ft/ft) | Velocity (ft/sec) | Capacity (cfs) | Description |
|---|---|---|---|---|---|
| 10.0 | | | | | **Direct Entry,** |

## Summary for Subcatchment 19: Offsite S8

Runoff = 0.58 cfs @ 9.98 hrs, Volume= 4,519 cf, Depth= 0.66"

Runoff by SBUH method, Split Pervious/Imperv., Time Span= 0.00-72.00 hrs, dt= 0.01 hrs
Type I 24-hr 2-Year Rainfall=2.29"

| | Area (ac) | CN | Description |
|---|---|---|---|
| * | 1.900 | 78 | |
| | 1.900 | 78 | 100.00% Pervious Area |

| Tc (min) | Length (feet) | Slope (ft/ft) | Velocity (ft/sec) | Capacity (cfs) | Description |
|---|---|---|---|---|---|
| 10.0 | | | | | **Direct Entry,** |

## Summary for Pond 3: Pond 1

Inflow Area = 71,003 sf, 72.39% Impervious, Inflow Depth = 1.67" for 2-Year event
Inflow = 1.58 cfs @ 9.96 hrs, Volume= 9,903 cf
Outflow = 0.36 cfs @ 10.59 hrs, Volume= 8,669 cf, Atten= 77%, Lag= 38.0 min
Primary = 0.36 cfs @ 10.59 hrs, Volume= 8,669 cf

Routing by Stor-Ind method, Time Span= 0.00-72.00 hrs, dt= 0.01 hrs
Peak Elev= 102.38' @ 10.59 hrs Surf.Area= 3,147 sf Storage= 3,761 cf

Plug-Flow detention time= 242.1 min calculated for 8,669 cf (88% of inflow)
Center-of-Mass det. time= 166.3 min ( 900.9 - 734.6 )

| Volume | Invert | Avail.Storage | Storage Description |
|---|---|---|---|
| #1 | 101.00' | 14,379 cf | **Custom Stage Data (Irregular)** Listed below (Recalc) |

| Elevation (feet) | Surf.Area (sq-ft) | Perim. (feet) | Inc.Store (cubic-feet) | Cum.Store (cubic-feet) | Wet.Area (sq-ft) |
|---|---|---|---|---|---|
| 101.00 | 2,318 | 187.0 | 0 | 0 | 2,318 |
| 102.00 | 2,907 | 207.0 | 2,607 | 2,607 | 2,975 |
| 103.00 | 3,556 | 226.0 | 3,226 | 5,833 | 3,665 |
| 104.00 | 4,264 | 246.0 | 3,905 | 9,738 | 4,452 |
| 105.00 | 5,029 | 266.0 | 4,641 | 14,379 | 5,306 |

| Device | Routing | Invert | Outlet Devices | |
|---|---|---|---|---|
| #1 | Primary | 101.50' | **4.0" Vert. Orifice/Grate** | C= 0.600 |
| #2 | Primary | 102.40' | **8.0" Vert. Orifice/Grate** | C= 0.600 |

**Primary OutFlow** Max=0.36 cfs @ 10.59 hrs HW=102.38' (Free Discharge)
└─**1=Orifice/Grate** (Orifice Controls 0.36 cfs @ 4.07 fps)
└─**2=Orifice/Grate** ( Controls 0.00 cfs)

## Summary for Pond 6: Pond 2

Inflow Area = 174,240 sf, 83.00% Impervious, Inflow Depth = 1.83" for 2-Year event
Inflow = 4.28 cfs @ 9.96 hrs, Volume= 26,579 cf
Outflow = 1.05 cfs @ 10.53 hrs, Volume= 24,729 cf, Atten= 76%, Lag= 34.4 min
Primary = 1.05 cfs @ 10.53 hrs, Volume= 24,729 cf

Routing by Stor-Ind method, Time Span= 0.00-72.00 hrs, dt= 0.01 hrs
Peak Elev= 77.47' @ 10.53 hrs Surf.Area= 5,329 sf Storage= 8,629 cf

Plug-Flow detention time= 175.1 min calculated for 24,729 cf (93% of inflow)
Center-of-Mass det. time= 129.7 min ( 857.0 - 727.4 )

| Volume | Invert | Avail.Storage | Storage Description |
|---|---|---|---|
| #1 | 75.50' | 43,957 cf | **Custom Stage Data (Prismatic)** Listed below (Recalc) |

| Elevation (feet) | Surf.Area (sq-ft) | Inc.Store (cubic-feet) | Cum.Store (cubic-feet) |
|---|---|---|---|
| 75.50 | 3,447 | 0 | 0 |
| 76.00 | 3,915 | 1,841 | 1,841 |
| 77.00 | 4,855 | 4,385 | 6,226 |
| 78.00 | 5,860 | 5,358 | 11,583 |
| 79.00 | 6,925 | 6,393 | 17,976 |
| 80.00 | 8,049 | 7,487 | 25,463 |
| 81.00 | 9,232 | 8,641 | 34,103 |
| 82.00 | 10,475 | 9,854 | 43,957 |

| Device | Routing | Invert | Outlet Devices | |
|---|---|---|---|---|
| #1 | Primary | 76.00' | **6.0" Vert. Orifice/Grate** | C= 0.600 |
| #2 | Primary | 77.50' | **10.0" Vert. Orifice/Grate** | C= 0.600 |

**Primary OutFlow** Max=1.05 cfs @ 10.53 hrs HW=77.47' (Free Discharge)
└─**1=Orifice/Grate** (Orifice Controls 1.05 cfs @ 5.32 fps)
└─**2=Orifice/Grate** ( Controls 0.00 cfs)

## Summary for Subcatchment 1: DMA 1- Pre Project

Runoff = 1.38 cfs @ 9.97 hrs, Volume= 9,140 cf, Depth= 1.33"

Runoff by SBUH method, Split Pervious/Imperv., Time Span= 0.00-72.00 hrs, dt= 0.01 hrs
Type I 24-hr 5-year Rainfall=3.28"

| | Area (ac) | CN | Description |
|---|---|---|---|
| * | 1.890 | 78 | |
| | 1.890 | 78 | 100.00% Pervious Area |

| Tc (min) | Length (feet) | Slope (ft/ft) | Velocity (ft/sec) | Capacity (cfs) | Description |
|---|---|---|---|---|---|
| 10.0 | | | | | **Direct Entry,** |

## Summary for Subcatchment 2: DMA 1-Post Project

Runoff = 2.42 cfs @ 9.96 hrs, Volume= 15,229 cf, Depth= 2.57"

Runoff by SBUH method, Split Pervious/Imperv., Time Span= 0.00-72.00 hrs, dt= 0.01 hrs
Type I 24-hr 5-year Rainfall=3.28"

| | Area (ac) | CN | Description |
|---|---|---|---|
| * | 1.180 | 98 | |
| * | 0.450 | 78 | |
| | 1.630 | 92 | Weighted Average |
| | 0.450 | 78 | 27.61% Pervious Area |
| | 1.180 | 98 | 72.39% Impervious Area |

| Tc (min) | Length (feet) | Slope (ft/ft) | Velocity (ft/sec) | Capacity (cfs) | Description |
|---|---|---|---|---|---|
| 10.0 | | | | | **Direct Entry,** |

## Summary for Subcatchment 4: DMA 2 - Pre development

Runoff = 3.12 cfs @ 9.97 hrs, Volume= 20,286 cf, Depth= 1.40"

Runoff by SBUH method, Split Pervious/Imperv., Time Span= 0.00-72.00 hrs, dt= 0.01 hrs
Type I 24-hr 5-year Rainfall=3.28"

| | Area (ac) | CN | Description |
|---|---|---|---|
| * | 3.320 | 79 | Pasture/grassland/range, Fair, HSG D |
| * | 0.680 | 79 | |
| | 4.000 | 79 | Weighted Average |
| | 4.000 | 79 | 100.00% Pervious Area |

| Tc (min) | Length (feet) | Slope (ft/ft) | Velocity (ft/sec) | Capacity (cfs) | Description |
|---|---|---|---|---|---|
| 10.0 | | | | | **Direct Entry,** |

## Summary for Subcatchment 5: DMA 2 - Post Project

Runoff = 6.42 cfs @ 9.96 hrs, Volume= 40,172 cf, Depth= 2.77"

Runoff by SBUH method, Split Pervious/Imperv., Time Span= 0.00-72.00 hrs, dt= 0.01 hrs
Type I 24-hr 5-year Rainfall=3.28"

| | Area (ac) | CN | Description |
|---|---|---|---|
| * | 3.320 | 98 | Pasture/grassland/range, Fair, HSG D |
| * | 0.680 | 79 | |
| | 4.000 | 95 | Weighted Average |
| | 0.680 | 79 | 17.00% Pervious Area |
| | 3.320 | 98 | 83.00% Impervious Area |

| Tc (min) | Length (feet) | Slope (ft/ft) | Velocity (ft/sec) | Capacity (cfs) | Description |
|---|---|---|---|---|---|
| 10.0 | | | | | **Direct Entry,** |

## Summary for Subcatchment 7: North 1

Runoff = 6.81 cfs @ 9.97 hrs, Volume= 44,977 cf, Depth= 1.33"

Runoff by SBUH method, Split Pervious/Imperv., Time Span= 0.00-72.00 hrs, dt= 0.01 hrs
Type I 24-hr 5-year Rainfall=3.28"

| | Area (ac) | CN | Description |
|---|---|---|---|
| * | 9.300 | 78 | |
| | 9.300 | 78 | 100.00% Pervious Area |

| Tc (min) | Length (feet) | Slope (ft/ft) | Velocity (ft/sec) | Capacity (cfs) | Description |
|---|---|---|---|---|---|
| 10.0 | | | | | **Direct Entry,** |

## Summary for Subcatchment 8: Offsite N2

Runoff = 0.31 cfs @ 9.97 hrs, Volume= 2,031 cf, Depth= 1.33"

Runoff by SBUH method, Split Pervious/Imperv., Time Span= 0.00-72.00 hrs, dt= 0.01 hrs
Type I 24-hr 5-year Rainfall=3.28"

| | Area (ac) | CN | Description |
|---|---|---|---|
| * | 0.420 | 78 | |
| | 0.420 | 78 | 100.00% Pervious Area |

| Tc (min) | Length (feet) | Slope (ft/ft) | Velocity (ft/sec) | Capacity (cfs) | Description |
|---|---|---|---|---|---|
| 10.0 | | | | | **Direct Entry,** |

## Summary for Subcatchment 9: Offsite N3

Runoff = 0.66 cfs @ 9.97 hrs, Volume= 4,353 cf, Depth= 1.33"

Runoff by SBUH method, Split Pervious/Imperv., Time Span= 0.00-72.00 hrs, dt= 0.01 hrs
Type I 24-hr 5-year Rainfall=3.28"

| | Area (ac) | CN | Description |
|---|---|---|---|
| * | 0.900 | 78 | |
| | 0.900 | 78 | 100.00% Pervious Area |

| Tc (min) | Length (feet) | Slope (ft/ft) | Velocity (ft/sec) | Capacity (cfs) | Description |
|---|---|---|---|---|---|
| 10.0 | | | | | **Direct Entry,** |

## Summary for Subcatchment 10: Offsite N4

Runoff = 0.36 cfs @ 9.97 hrs, Volume= 2,370 cf, Depth= 1.33"

Runoff by SBUH method, Split Pervious/Imperv., Time Span= 0.00-72.00 hrs, dt= 0.01 hrs
Type I 24-hr 5-year Rainfall=3.28"

| | Area (ac) | CN | Description |
|---|---|---|---|
| * | 0.490 | 78 | |
| | 0.490 | 78 | 100.00% Pervious Area |

| Tc (min) | Length (feet) | Slope (ft/ft) | Velocity (ft/sec) | Capacity (cfs) | Description |
|---|---|---|---|---|---|
| 10.0 | | | | | **Direct Entry,** |

## Summary for Subcatchment 11: Offsite N5

Runoff = 0.21 cfs @ 9.97 hrs, Volume= 1,403 cf, Depth= 1.33"

Runoff by SBUH method, Split Pervious/Imperv., Time Span= 0.00-72.00 hrs, dt= 0.01 hrs
Type I 24-hr 5-year Rainfall=3.28"

| | Area (ac) | CN | Description |
|---|---|---|---|
| * | 0.290 | 78 | |
| | 0.290 | 78 | 100.00% Pervious Area |

| Tc (min) | Length (feet) | Slope (ft/ft) | Velocity (ft/sec) | Capacity (cfs) | Description |
|---|---|---|---|---|---|
| 10.0 | | | | | **Direct Entry,** |

## Summary for Subcatchment 12: Offsite S1

Runoff = 7.98 cfs @ 9.97 hrs, Volume= 52,715 cf, Depth= 1.33"

Runoff by SBUH method, Split Pervious/Imperv., Time Span= 0.00-72.00 hrs, dt= 0.01 hrs
Type I 24-hr 5-year Rainfall=3.28"

| | Area (ac) | CN | Description |
|---|---|---|---|
| * | 10.900 | 78 | |
| | 10.900 | 78 | 100.00% Pervious Area |

| Tc (min) | Length (feet) | Slope (ft/ft) | Velocity (ft/sec) | Capacity (cfs) | Description |
|---|---|---|---|---|---|
| 10.0 | | | | | **Direct Entry,** |

## Summary for Subcatchment 13: Offsite S2

Runoff = 0.88 cfs @ 9.97 hrs, Volume= 5,803 cf, Depth= 1.33"

Runoff by SBUH method, Split Pervious/Imperv., Time Span= 0.00-72.00 hrs, dt= 0.01 hrs
Type I 24-hr 5-year Rainfall=3.28"

| | Area (ac) | CN | Description |
|---|---|---|---|
| * | 1.200 | 78 | |
| | 1.200 | 78 | 100.00% Pervious Area |

| Tc (min) | Length (feet) | Slope (ft/ft) | Velocity (ft/sec) | Capacity (cfs) | Description |
|---|---|---|---|---|---|
| 10.0 | | | | | **Direct Entry,** |

## Summary for Subcatchment 14: Offsite S3

Runoff = 0.71 cfs @ 9.97 hrs, Volume= 4,691 cf, Depth= 1.33"

Runoff by SBUH method, Split Pervious/Imperv., Time Span= 0.00-72.00 hrs, dt= 0.01 hrs
Type I 24-hr 5-year Rainfall=3.28"

| | Area (ac) | CN | Description |
|---|---|---|---|
| * | 0.970 | 78 | |
| | 0.970 | 78 | 100.00% Pervious Area |

| Tc (min) | Length (feet) | Slope (ft/ft) | Velocity (ft/sec) | Capacity (cfs) | Description |
|---|---|---|---|---|---|
| 10.0 | | | | | **Direct Entry,** |

## Summary for Subcatchment 15: Offsite S4

Runoff = 0.60 cfs @ 9.97 hrs, Volume= 3,966 cf, Depth= 1.33"

Runoff by SBUH method, Split Pervious/Imperv., Time Span= 0.00-72.00 hrs, dt= 0.01 hrs
Type I 24-hr 5-year Rainfall=3.28"

| | Area (ac) | CN | Description |
|---|---|---|---|
| * | 0.820 | 78 | |
| | 0.820 | 78 | 100.00% Pervious Area |

| Tc (min) | Length (feet) | Slope (ft/ft) | Velocity (ft/sec) | Capacity (cfs) | Description |
|---|---|---|---|---|---|
| 10.0 | | | | | **Direct Entry,** |

## Summary for Subcatchment 16: Offsite S5

Runoff = 1.10 cfs @ 9.97 hrs, Volume= 7,254 cf, Depth= 1.33"

Runoff by SBUH method, Split Pervious/Imperv., Time Span= 0.00-72.00 hrs, dt= 0.01 hrs
Type I 24-hr 5-year Rainfall=3.28"

| | Area (ac) | CN | Description |
|---|---|---|---|
| * | 1.500 | 78 | |
| | 1.500 | 78 | 100.00% Pervious Area |

| Tc (min) | Length (feet) | Slope (ft/ft) | Velocity (ft/sec) | Capacity (cfs) | Description |
|---|---|---|---|---|---|
| 10.0 | | | | | **Direct Entry,** |

## Summary for Subcatchment 17: Offsite S6

Runoff = 0.37 cfs @ 9.97 hrs, Volume= 2,418 cf, Depth= 1.33"

Runoff by SBUH method, Split Pervious/Imperv., Time Span= 0.00-72.00 hrs, dt= 0.01 hrs
Type I 24-hr 5-year Rainfall=3.28"

| | Area (ac) | CN | Description |
|---|---|---|---|
| * | 0.500 | 78 | |
| | 0.500 | 78 | 100.00% Pervious Area |

| Tc (min) | Length (feet) | Slope (ft/ft) | Velocity (ft/sec) | Capacity (cfs) | Description |
|---|---|---|---|---|---|
| 10.0 | | | | | **Direct Entry,** |

## Summary for Subcatchment 18: Offsite S7

Runoff = 1.10 cfs @ 9.97 hrs, Volume= 7,254 cf, Depth= 1.33"

Runoff by SBUH method, Split Pervious/Imperv., Time Span= 0.00-72.00 hrs, dt= 0.01 hrs
Type I 24-hr 5-year Rainfall=3.28"

| | Area (ac) | CN | Description |
|---|---|---|---|
| * | 1.500 | 78 | |
| | 1.500 | 78 | 100.00% Pervious Area |

| Tc (min) | Length (feet) | Slope (ft/ft) | Velocity (ft/sec) | Capacity (cfs) | Description |
|---|---|---|---|---|---|
| 10.0 | | | | | **Direct Entry,** |

## Summary for Subcatchment 19: Offsite S8

Runoff = 1.39 cfs @ 9.97 hrs, Volume= 9,189 cf, Depth= 1.33"

Runoff by SBUH method, Split Pervious/Imperv., Time Span= 0.00-72.00 hrs, dt= 0.01 hrs
Type I 24-hr 5-year Rainfall=3.28"

| | Area (ac) | CN | Description |
|---|---|---|---|
| * | 1.900 | 78 | |
| | 1.900 | 78 | 100.00% Pervious Area |

| Tc (min) | Length (feet) | Slope (ft/ft) | Velocity (ft/sec) | Capacity (cfs) | Description |
|---|---|---|---|---|---|
| 10.0 | | | | | **Direct Entry,** |

## Summary for Pond 3: Pond 1

Inflow Area = 71,003 sf, 72.39% Impervious, Inflow Depth = 2.57" for 5-year event
Inflow = 2.42 cfs @ 9.96 hrs, Volume= 15,229 cf
Outflow = 0.82 cfs @ 10.37 hrs, Volume= 13,995 cf, Atten= 66%, Lag= 24.6 min
Primary = 0.82 cfs @ 10.37 hrs, Volume= 13,995 cf

Routing by Stor-Ind method, Time Span= 0.00-72.00 hrs, dt= 0.01 hrs
Peak Elev= 102.75' @ 10.37 hrs Surf.Area= 3,390 sf Storage= 4,977 cf

Plug-Flow detention time= 195.7 min calculated for 13,993 cf (92% of inflow)
Center-of-Mass det. time= 143.8 min ( 870.4 - 726.6 )

| Volume | Invert | Avail.Storage | Storage Description |
|---|---|---|---|
| #1 | 101.00' | 14,379 cf | **Custom Stage Data (Irregular)** Listed below (Recalc) |

| Elevation (feet) | Surf.Area (sq-ft) | Perim. (feet) | Inc.Store (cubic-feet) | Cum.Store (cubic-feet) | Wet.Area (sq-ft) |
|---|---|---|---|---|---|
| 101.00 | 2,318 | 187.0 | 0 | 0 | 2,318 |
| 102.00 | 2,907 | 207.0 | 2,607 | 2,607 | 2,975 |
| 103.00 | 3,556 | 226.0 | 3,226 | 5,833 | 3,665 |
| 104.00 | 4,264 | 246.0 | 3,905 | 9,738 | 4,452 |
| 105.00 | 5,029 | 266.0 | 4,641 | 14,379 | 5,306 |

| Device | Routing | Invert | Outlet Devices | |
|---|---|---|---|---|
| #1 | Primary | 101.50' | **4.0" Vert. Orifice/Grate** | C= 0.600 |
| #2 | Primary | 102.40' | **8.0" Vert. Orifice/Grate** | C= 0.600 |

**Primary OutFlow** Max=0.82 cfs @ 10.37 hrs HW=102.75' (Free Discharge)
└─**1=Orifice/Grate** (Orifice Controls 0.44 cfs @ 5.02 fps)
└─**2=Orifice/Grate** (Orifice Controls 0.38 cfs @ 2.02 fps)

## Summary for Pond 6: Pond 2

Inflow Area = 174,240 sf, 83.00% Impervious, Inflow Depth = 2.77" for 5-year event
Inflow = 6.42 cfs @ 9.96 hrs, Volume= 40,172 cf
Outflow = 2.10 cfs @ 10.38 hrs, Volume= 38,321 cf, Atten= 67%, Lag= 25.2 min
Primary = 2.10 cfs @ 10.38 hrs, Volume= 38,321 cf

Routing by Stor-Ind method, Time Span= 0.00-72.00 hrs, dt= 0.01 hrs
Peak Elev= 78.01' @ 10.38 hrs Surf.Area= 5,870 sf Storage= 11,639 cf

Plug-Flow detention time= 147.1 min calculated for 38,316 cf (95% of inflow)
Center-of-Mass det. time= 116.1 min ( 834.7 - 718.6 )

| Volume | Invert | Avail.Storage | Storage Description |
|---|---|---|---|
| #1 | 75.50' | 43,957 cf | **Custom Stage Data (Prismatic)** Listed below (Recalc) |

| Elevation (feet) | Surf.Area (sq-ft) | Inc.Store (cubic-feet) | Cum.Store (cubic-feet) |
|---|---|---|---|
| 75.50 | 3,447 | 0 | 0 |
| 76.00 | 3,915 | 1,841 | 1,841 |
| 77.00 | 4,855 | 4,385 | 6,226 |
| 78.00 | 5,860 | 5,358 | 11,583 |
| 79.00 | 6,925 | 6,393 | 17,976 |
| 80.00 | 8,049 | 7,487 | 25,463 |
| 81.00 | 9,232 | 8,641 | 34,103 |
| 82.00 | 10,475 | 9,854 | 43,957 |

| Device | Routing | Invert | Outlet Devices | |
|---|---|---|---|---|
| #1 | Primary | 76.00' | **6.0" Vert. Orifice/Grate** | C= 0.600 |
| #2 | Primary | 77.50' | **10.0" Vert. Orifice/Grate** | C= 0.600 |

**Primary OutFlow** Max=2.10 cfs @ 10.38 hrs HW=78.01' (Free Discharge)
└─**1=Orifice/Grate** (Orifice Controls 1.25 cfs @ 6.39 fps)
└─**2=Orifice/Grate** (Orifice Controls 0.85 cfs @ 2.43 fps)

## Summary for Subcatchment 1: DMA 1- Pre Project

Runoff = 2.15 cfs @ 9.97 hrs, Volume= 13,494 cf, Depth= 1.97"

Runoff by SBUH method, Split Pervious/Imperv., Time Span= 0.00-72.00 hrs, dt= 0.01 hrs
Type I 24-hr 10-Year Rainfall=4.10"

| | Area (ac) | CN | Description |
|---|---|---|---|
| * | 1.890 | 78 | |
| | 1.890 | 78 | 100.00% Pervious Area |

| Tc (min) | Length (feet) | Slope (ft/ft) | Velocity (ft/sec) | Capacity (cfs) | Description |
|---|---|---|---|---|---|
| 10.0 | | | | | **Direct Entry,** |

## Summary for Subcatchment 2: DMA 1-Post Project

Runoff = 3.15 cfs @ 9.96 hrs, Volume= 19,768 cf, Depth= 3.34"

Runoff by SBUH method, Split Pervious/Imperv., Time Span= 0.00-72.00 hrs, dt= 0.01 hrs
Type I 24-hr 10-Year Rainfall=4.10"

| | Area (ac) | CN | Description |
|---|---|---|---|
| * | 1.180 | 98 | |
| * | 0.450 | 78 | |
| | 1.630 | 92 | Weighted Average |
| | 0.450 | 78 | 27.61% Pervious Area |
| | 1.180 | 98 | 72.39% Impervious Area |

| Tc (min) | Length (feet) | Slope (ft/ft) | Velocity (ft/sec) | Capacity (cfs) | Description |
|---|---|---|---|---|---|
| 10.0 | | | | | **Direct Entry,** |

## Summary for Subcatchment 4: DMA 2 - Pre development

Runoff = 4.78 cfs @ 9.97 hrs, Volume= 29,693 cf, Depth= 2.04"

Runoff by SBUH method, Split Pervious/Imperv., Time Span= 0.00-72.00 hrs, dt= 0.01 hrs
Type I 24-hr 10-Year Rainfall=4.10"

| | Area (ac) | CN | Description |
|---|---|---|---|
| * | 3.320 | 79 | Pasture/grassland/range, Fair, HSG D |
| * | 0.680 | 79 | |
| | 4.000 | 79 | Weighted Average |
| | 4.000 | 79 | 100.00% Pervious Area |

| Tc (min) | Length (feet) | Slope (ft/ft) | Velocity (ft/sec) | Capacity (cfs) | Description |
|---|---|---|---|---|---|
| 10.0 | | | | | **Direct Entry,** |

## Summary for Subcatchment 5: DMA 2 - Post Project

Runoff = 8.22 cfs @ 9.96 hrs, Volume= 51,626 cf, Depth= 3.56"

Runoff by SBUH method, Split Pervious/Imperv., Time Span= 0.00-72.00 hrs, dt= 0.01 hrs
Type I 24-hr 10-Year Rainfall=4.10"

| | Area (ac) | CN | Description |
|---|---|---|---|
| * | 3.320 | 98 | Pasture/grassland/range, Fair, HSG D |
| * | 0.680 | 79 | |
| | 4.000 | 95 | Weighted Average |
| | 0.680 | 79 | 17.00% Pervious Area |
| | 3.320 | 98 | 83.00% Impervious Area |

| Tc (min) | Length (feet) | Slope (ft/ft) | Velocity (ft/sec) | Capacity (cfs) | Description |
|---|---|---|---|---|---|
| 10.0 | | | | | **Direct Entry,** |

## Summary for Subcatchment 7: North 1

Runoff = 10.58 cfs @ 9.97 hrs, Volume= 66,401 cf, Depth= 1.97"

Runoff by SBUH method, Split Pervious/Imperv., Time Span= 0.00-72.00 hrs, dt= 0.01 hrs
Type I 24-hr 10-Year Rainfall=4.10"

| | Area (ac) | CN | Description |
|---|---|---|---|
| * | 9.300 | 78 | |
| | 9.300 | 78 | 100.00% Pervious Area |

| Tc (min) | Length (feet) | Slope (ft/ft) | Velocity (ft/sec) | Capacity (cfs) | Description |
|---|---|---|---|---|---|
| 10.0 | | | | | **Direct Entry,** |

## Summary for Subcatchment 8: Offsite N2

Runoff = 0.48 cfs @ 9.97 hrs, Volume= 2,999 cf, Depth= 1.97"

Runoff by SBUH method, Split Pervious/Imperv., Time Span= 0.00-72.00 hrs, dt= 0.01 hrs
Type I 24-hr 10-Year Rainfall=4.10"

| | Area (ac) | CN | Description |
|---|---|---|---|
| * | 0.420 | 78 | |
| | 0.420 | 78 | 100.00% Pervious Area |

| Tc (min) | Length (feet) | Slope (ft/ft) | Velocity (ft/sec) | Capacity (cfs) | Description |
|---|---|---|---|---|---|
| 10.0 | | | | | **Direct Entry,** |

## Summary for Subcatchment 9: Offsite N3

Runoff = 1.02 cfs @ 9.97 hrs, Volume= 6,426 cf, Depth= 1.97"

Runoff by SBUH method, Split Pervious/Imperv., Time Span= 0.00-72.00 hrs, dt= 0.01 hrs
Type I 24-hr 10-Year Rainfall=4.10"

| | Area (ac) | CN | Description |
|---|---|---|---|
| * | 0.900 | 78 | |
| | 0.900 | 78 | 100.00% Pervious Area |

| Tc (min) | Length (feet) | Slope (ft/ft) | Velocity (ft/sec) | Capacity (cfs) | Description |
|---|---|---|---|---|---|
| 10.0 | | | | | **Direct Entry,** |

## Summary for Subcatchment 10: Offsite N4

Runoff = 0.56 cfs @ 9.97 hrs, Volume= 3,499 cf, Depth= 1.97"

Runoff by SBUH method, Split Pervious/Imperv., Time Span= 0.00-72.00 hrs, dt= 0.01 hrs
Type I 24-hr 10-Year Rainfall=4.10"

| | Area (ac) | CN | Description |
|---|---|---|---|
| * | 0.490 | 78 | |
| | 0.490 | 78 | 100.00% Pervious Area |

| Tc (min) | Length (feet) | Slope (ft/ft) | Velocity (ft/sec) | Capacity (cfs) | Description |
|---|---|---|---|---|---|
| 10.0 | | | | | **Direct Entry,** |

## Summary for Subcatchment 11: Offsite N5

Runoff = 0.33 cfs @ 9.97 hrs, Volume= 2,071 cf, Depth= 1.97"

Runoff by SBUH method, Split Pervious/Imperv., Time Span= 0.00-72.00 hrs, dt= 0.01 hrs
Type I 24-hr 10-Year Rainfall=4.10"

| | Area (ac) | CN | Description |
|---|---|---|---|
| * | 0.290 | 78 | |
| | 0.290 | 78 | 100.00% Pervious Area |

| Tc (min) | Length (feet) | Slope (ft/ft) | Velocity (ft/sec) | Capacity (cfs) | Description |
|---|---|---|---|---|---|
| 10.0 | | | | | **Direct Entry,** |

## Summary for Subcatchment 12: Offsite S1

Runoff = 12.39 cfs @ 9.97 hrs, Volume= 77,825 cf, Depth= 1.97"

Runoff by SBUH method, Split Pervious/Imperv., Time Span= 0.00-72.00 hrs, dt= 0.01 hrs
Type I 24-hr 10-Year Rainfall=4.10"

| | Area (ac) | CN | Description |
|---|---|---|---|
| * | 10.900 | 78 | |
| | 10.900 | 78 | 100.00% Pervious Area |

| Tc (min) | Length (feet) | Slope (ft/ft) | Velocity (ft/sec) | Capacity (cfs) | Description |
|---|---|---|---|---|---|
| 10.0 | | | | | **Direct Entry,** |

## Summary for Subcatchment 13: Offsite S2

Runoff = 1.36 cfs @ 9.97 hrs, Volume= 8,568 cf, Depth= 1.97"

Runoff by SBUH method, Split Pervious/Imperv., Time Span= 0.00-72.00 hrs, dt= 0.01 hrs
Type I 24-hr 10-Year Rainfall=4.10"

| | Area (ac) | CN | Description |
|---|---|---|---|
| * | 1.200 | 78 | |
| | 1.200 | 78 | 100.00% Pervious Area |

| Tc (min) | Length (feet) | Slope (ft/ft) | Velocity (ft/sec) | Capacity (cfs) | Description |
|---|---|---|---|---|---|
| 10.0 | | | | | **Direct Entry,** |

## Summary for Subcatchment 14: Offsite S3

Runoff = 1.10 cfs @ 9.97 hrs, Volume= 6,926 cf, Depth= 1.97"

Runoff by SBUH method, Split Pervious/Imperv., Time Span= 0.00-72.00 hrs, dt= 0.01 hrs
Type I 24-hr 10-Year Rainfall=4.10"

| | Area (ac) | CN | Description |
|---|---|---|---|
| * | 0.970 | 78 | |
| | 0.970 | 78 | 100.00% Pervious Area |

| Tc (min) | Length (feet) | Slope (ft/ft) | Velocity (ft/sec) | Capacity (cfs) | Description |
|---|---|---|---|---|---|
| 10.0 | | | | | **Direct Entry,** |

## Summary for Subcatchment 15: Offsite S4

Runoff = 0.93 cfs @ 9.97 hrs, Volume= 5,855 cf, Depth= 1.97"

Runoff by SBUH method, Split Pervious/Imperv., Time Span= 0.00-72.00 hrs, dt= 0.01 hrs
Type I 24-hr 10-Year Rainfall=4.10"

| | Area (ac) | CN | Description |
|---|---|---|---|
| * | 0.820 | 78 | |
| | 0.820 | 78 | 100.00% Pervious Area |

| Tc (min) | Length (feet) | Slope (ft/ft) | Velocity (ft/sec) | Capacity (cfs) | Description |
|---|---|---|---|---|---|
| 10.0 | | | | | **Direct Entry,** |

## Summary for Subcatchment 16: Offsite S5

Runoff = 1.71 cfs @ 9.97 hrs, Volume= 10,710 cf, Depth= 1.97"

Runoff by SBUH method, Split Pervious/Imperv., Time Span= 0.00-72.00 hrs, dt= 0.01 hrs
Type I 24-hr 10-Year Rainfall=4.10"

| | Area (ac) | CN | Description |
|---|---|---|---|
| * | 1.500 | 78 | |
| | 1.500 | 78 | 100.00% Pervious Area |

| Tc (min) | Length (feet) | Slope (ft/ft) | Velocity (ft/sec) | Capacity (cfs) | Description |
|---|---|---|---|---|---|
| 10.0 | | | | | **Direct Entry,** |

## Summary for Subcatchment 17: Offsite S6

Runoff = 0.57 cfs @ 9.97 hrs, Volume= 3,570 cf, Depth= 1.97"

Runoff by SBUH method, Split Pervious/Imperv., Time Span= 0.00-72.00 hrs, dt= 0.01 hrs
Type I 24-hr 10-Year Rainfall=4.10"

| | Area (ac) | CN | Description |
|---|---|---|---|
| * | 0.500 | 78 | |
| | 0.500 | 78 | 100.00% Pervious Area |

| Tc (min) | Length (feet) | Slope (ft/ft) | Velocity (ft/sec) | Capacity (cfs) | Description |
|---|---|---|---|---|---|
| 10.0 | | | | | **Direct Entry,** |

## Summary for Subcatchment 18: Offsite S7

Runoff = 1.71 cfs @ 9.97 hrs, Volume= 10,710 cf, Depth= 1.97"

Runoff by SBUH method, Split Pervious/Imperv., Time Span= 0.00-72.00 hrs, dt= 0.01 hrs
Type I 24-hr 10-Year Rainfall=4.10"

| | Area (ac) | CN | Description |
|---|---|---|---|
| * | 1.500 | 78 | |
| | 1.500 | 78 | 100.00% Pervious Area |

| Tc (min) | Length (feet) | Slope (ft/ft) | Velocity (ft/sec) | Capacity (cfs) | Description |
|---|---|---|---|---|---|
| 10.0 | | | | | **Direct Entry,** |

## Summary for Subcatchment 19: Offsite S8

Runoff = 2.16 cfs @ 9.97 hrs, Volume= 13,566 cf, Depth= 1.97"

Runoff by SBUH method, Split Pervious/Imperv., Time Span= 0.00-72.00 hrs, dt= 0.01 hrs
Type I 24-hr 10-Year Rainfall=4.10"

| | Area (ac) | CN | Description |
|---|---|---|---|
| * | 1.900 | 78 | |
| | 1.900 | 78 | 100.00% Pervious Area |

| Tc (min) | Length (feet) | Slope (ft/ft) | Velocity (ft/sec) | Capacity (cfs) | Description |
|---|---|---|---|---|---|
| 10.0 | | | | | **Direct Entry,** |

## Summary for Pond 3: Pond 1

Inflow Area = 71,003 sf, 72.39% Impervious, Inflow Depth = 3.34" for 10-Year event
Inflow = 3.15 cfs @ 9.96 hrs, Volume= 19,768 cf
Outflow = 1.31 cfs @ 10.27 hrs, Volume= 18,534 cf, Atten= 58%, Lag= 18.7 min
Primary = 1.31 cfs @ 10.27 hrs, Volume= 18,534 cf

Routing by Stor-Ind method, Time Span= 0.00-72.00 hrs, dt= 0.01 hrs
Peak Elev= 102.98' @ 10.27 hrs Surf.Area= 3,542 sf Storage= 5,758 cf

Plug-Flow detention time= 170.7 min calculated for 18,534 cf (94% of inflow)
Center-of-Mass det. time= 129.2 min ( 851.1 - 721.9 )

| Volume | Invert | Avail.Storage | Storage Description |
|---|---|---|---|
| #1 | 101.00' | 14,379 cf | **Custom Stage Data (Irregular)** Listed below (Recalc) |

| Elevation (feet) | Surf.Area (sq-ft) | Perim. (feet) | Inc.Store (cubic-feet) | Cum.Store (cubic-feet) | Wet.Area (sq-ft) |
|---|---|---|---|---|---|
| 101.00 | 2,318 | 187.0 | 0 | 0 | 2,318 |
| 102.00 | 2,907 | 207.0 | 2,607 | 2,607 | 2,975 |
| 103.00 | 3,556 | 226.0 | 3,226 | 5,833 | 3,665 |
| 104.00 | 4,264 | 246.0 | 3,905 | 9,738 | 4,452 |
| 105.00 | 5,029 | 266.0 | 4,641 | 14,379 | 5,306 |

| Device | Routing | Invert | Outlet Devices | |
|---|---|---|---|---|
| #1 | Primary | 101.50' | **4.0" Vert. Orifice/Grate** | C= 0.600 |
| #2 | Primary | 102.40' | **8.0" Vert. Orifice/Grate** | C= 0.600 |

**Primary OutFlow** Max=1.31 cfs @ 10.27 hrs HW=102.98' (Free Discharge)
└─**1=Orifice/Grate** (Orifice Controls 0.48 cfs @ 5.52 fps)
└─**2=Orifice/Grate** (Orifice Controls 0.83 cfs @ 2.59 fps)

## Summary for Pond 6: Pond 2

Inflow Area = 174,240 sf, 83.00% Impervious, Inflow Depth = 3.56" for 10-Year event
Inflow = 8.22 cfs @ 9.96 hrs, Volume= 51,626 cf
Outflow = 3.12 cfs @ 10.31 hrs, Volume= 49,775 cf, Atten= 62%, Lag= 21.0 min
Primary = 3.12 cfs @ 10.31 hrs, Volume= 49,775 cf

Routing by Stor-Ind method, Time Span= 0.00-72.00 hrs, dt= 0.01 hrs
Peak Elev= 78.36' @ 10.31 hrs Surf.Area= 6,242 sf Storage= 13,752 cf

Plug-Flow detention time= 131.4 min calculated for 49,775 cf (96% of inflow)
Center-of-Mass det. time= 106.5 min ( 820.3 - 713.7 )

| Volume | Invert | Avail.Storage | Storage Description |
|---|---|---|---|
| #1 | 75.50' | 43,957 cf | **Custom Stage Data (Prismatic)** Listed below (Recalc) |

| Elevation (feet) | Surf.Area (sq-ft) | Inc.Store (cubic-feet) | Cum.Store (cubic-feet) |
|---|---|---|---|
| 75.50 | 3,447 | 0 | 0 |
| 76.00 | 3,915 | 1,841 | 1,841 |
| 77.00 | 4,855 | 4,385 | 6,226 |
| 78.00 | 5,860 | 5,358 | 11,583 |
| 79.00 | 6,925 | 6,393 | 17,976 |
| 80.00 | 8,049 | 7,487 | 25,463 |
| 81.00 | 9,232 | 8,641 | 34,103 |
| 82.00 | 10,475 | 9,854 | 43,957 |

| Device | Routing | Invert | Outlet Devices | |
|---|---|---|---|---|
| #1 | Primary | 76.00' | **6.0" Vert. Orifice/Grate** | C= 0.600 |
| #2 | Primary | 77.50' | **10.0" Vert. Orifice/Grate** | C= 0.600 |

**Primary OutFlow** Max=3.12 cfs @ 10.31 hrs HW=78.36' (Free Discharge)
└─**1=Orifice/Grate** (Orifice Controls 1.37 cfs @ 6.99 fps)
└─**2=Orifice/Grate** (Orifice Controls 1.75 cfs @ 3.20 fps)

## Summary for Subcatchment 1: DMA 1- Pre Project

Runoff = 3.32 cfs @ 9.96 hrs, Volume= 20,128 cf, Depth= 2.93"

Runoff by SBUH method, Split Pervious/Imperv., Time Span= 0.00-72.00 hrs, dt= 0.01 hrs
Type I 24-hr 25-Year Rainfall=5.26"

| | Area (ac) | CN | Description |
|---|---|---|---|
| * | 1.890 | 78 | |
| | 1.890 | 78 | 100.00% Pervious Area |

| Tc (min) | Length (feet) | Slope (ft/ft) | Velocity (ft/sec) | Capacity (cfs) | Description |
|---|---|---|---|---|---|
| 10.0 | | | | | **Direct Entry,** |

## Summary for Subcatchment 2: DMA 1-Post Project

Runoff = 4.18 cfs @ 9.96 hrs, Volume= 26,307 cf, Depth= 4.45"

Runoff by SBUH method, Split Pervious/Imperv., Time Span= 0.00-72.00 hrs, dt= 0.01 hrs
Type I 24-hr 25-Year Rainfall=5.26"

| | Area (ac) | CN | Description |
|---|---|---|---|
| * | 1.180 | 98 | |
| * | 0.450 | 78 | |
| | 1.630 | 92 | Weighted Average |
| | 0.450 | 78 | 27.61% Pervious Area |
| | 1.180 | 98 | 72.39% Impervious Area |

| Tc (min) | Length (feet) | Slope (ft/ft) | Velocity (ft/sec) | Capacity (cfs) | Description |
|---|---|---|---|---|---|
| 10.0 | | | | | **Direct Entry,** |

## Summary for Subcatchment 4: DMA 2 - Pre development

Runoff = 7.28 cfs @ 9.96 hrs, Volume= 43,948 cf, Depth= 3.03"

Runoff by SBUH method, Split Pervious/Imperv., Time Span= 0.00-72.00 hrs, dt= 0.01 hrs
Type I 24-hr 25-Year Rainfall=5.26"

| | Area (ac) | CN | Description |
|---|---|---|---|
| * | 3.320 | 79 | Pasture/grassland/range, Fair, HSG D |
| * | 0.680 | 79 | |
| | 4.000 | 79 | Weighted Average |
| | 4.000 | 79 | 100.00% Pervious Area |

| Tc (min) | Length (feet) | Slope (ft/ft) | Velocity (ft/sec) | Capacity (cfs) | Description |
|---|---|---|---|---|---|
| 10.0 | | | | | **Direct Entry,** |

## Summary for Subcatchment 5: DMA 2 - Post Project

Runoff = 10.79 cfs @ 9.96 hrs, Volume= 68,004 cf, Depth= 4.68"

Runoff by SBUH method, Split Pervious/Imperv., Time Span= 0.00-72.00 hrs, dt= 0.01 hrs
Type I 24-hr 25-Year Rainfall=5.26"

| | Area (ac) | CN | Description |
|---|---|---|---|
| * | 3.320 | 98 | Pasture/grassland/range, Fair, HSG D |
| * | 0.680 | 79 | |
| | 4.000 | 95 | Weighted Average |
| | 0.680 | 79 | 17.00% Pervious Area |
| | 3.320 | 98 | 83.00% Impervious Area |

| Tc (min) | Length (feet) | Slope (ft/ft) | Velocity (ft/sec) | Capacity (cfs) | Description |
|---|---|---|---|---|---|
| 10.0 | | | | | **Direct Entry,** |

## Summary for Subcatchment 7: North 1

Runoff = 16.32 cfs @ 9.96 hrs, Volume= 99,041 cf, Depth= 2.93"

Runoff by SBUH method, Split Pervious/Imperv., Time Span= 0.00-72.00 hrs, dt= 0.01 hrs
Type I 24-hr 25-Year Rainfall=5.26"

| | Area (ac) | CN | Description |
|---|---|---|---|
| * | 9.300 | 78 | |
| | 9.300 | 78 | 100.00% Pervious Area |

| Tc (min) | Length (feet) | Slope (ft/ft) | Velocity (ft/sec) | Capacity (cfs) | Description |
|---|---|---|---|---|---|
| 10.0 | | | | | **Direct Entry,** |

## Summary for Subcatchment 8: Offsite N2

Runoff = 0.74 cfs @ 9.96 hrs, Volume= 4,473 cf, Depth= 2.93"

Runoff by SBUH method, Split Pervious/Imperv., Time Span= 0.00-72.00 hrs, dt= 0.01 hrs
Type I 24-hr 25-Year Rainfall=5.26"

| | Area (ac) | CN | Description |
|---|---|---|---|
| * | 0.420 | 78 | |
| | 0.420 | 78 | 100.00% Pervious Area |

| Tc (min) | Length (feet) | Slope (ft/ft) | Velocity (ft/sec) | Capacity (cfs) | Description |
|---|---|---|---|---|---|
| 10.0 | | | | | **Direct Entry,** |

## Summary for Subcatchment 9: Offsite N3

Runoff = 1.58 cfs @ 9.96 hrs, Volume= 9,585 cf, Depth= 2.93"

Runoff by SBUH method, Split Pervious/Imperv., Time Span= 0.00-72.00 hrs, dt= 0.01 hrs
Type I 24-hr 25-Year Rainfall=5.26"

| | Area (ac) | CN | Description |
|---|---|---|---|
| * | 0.900 | 78 | |
| | 0.900 | 78 | 100.00% Pervious Area |

| Tc (min) | Length (feet) | Slope (ft/ft) | Velocity (ft/sec) | Capacity (cfs) | Description |
|---|---|---|---|---|---|
| 10.0 | | | | | **Direct Entry,** |

## Summary for Subcatchment 10: Offsite N4

Runoff = 0.86 cfs @ 9.96 hrs, Volume= 5,218 cf, Depth= 2.93"

Runoff by SBUH method, Split Pervious/Imperv., Time Span= 0.00-72.00 hrs, dt= 0.01 hrs
Type I 24-hr 25-Year Rainfall=5.26"

| | Area (ac) | CN | Description |
|---|---|---|---|
| * | 0.490 | 78 | |
| | 0.490 | 78 | 100.00% Pervious Area |

| Tc (min) | Length (feet) | Slope (ft/ft) | Velocity (ft/sec) | Capacity (cfs) | Description |
|---|---|---|---|---|---|
| 10.0 | | | | | **Direct Entry,** |

## Summary for Subcatchment 11: Offsite N5

Runoff = 0.51 cfs @ 9.96 hrs, Volume= 3,088 cf, Depth= 2.93"

Runoff by SBUH method, Split Pervious/Imperv., Time Span= 0.00-72.00 hrs, dt= 0.01 hrs
Type I 24-hr 25-Year Rainfall=5.26"

| | Area (ac) | CN | Description |
|---|---|---|---|
| * | 0.290 | 78 | |
| | 0.290 | 78 | 100.00% Pervious Area |

| Tc (min) | Length (feet) | Slope (ft/ft) | Velocity (ft/sec) | Capacity (cfs) | Description |
|---|---|---|---|---|---|
| 10.0 | | | | | **Direct Entry,** |

## Summary for Subcatchment 12: Offsite S1

Runoff = 19.13 cfs @ 9.96 hrs, Volume= 116,081 cf, Depth= 2.93"

Runoff by SBUH method, Split Pervious/Imperv., Time Span= 0.00-72.00 hrs, dt= 0.01 hrs
Type I 24-hr 25-Year Rainfall=5.26"

| | Area (ac) | CN | Description |
|---|---|---|---|
| * | 10.900 | 78 | |
| | 10.900 | 78 | 100.00% Pervious Area |

| Tc (min) | Length (feet) | Slope (ft/ft) | Velocity (ft/sec) | Capacity (cfs) | Description |
|---|---|---|---|---|---|
| 10.0 | | | | | **Direct Entry,** |

## Summary for Subcatchment 13: Offsite S2

Runoff = 2.11 cfs @ 9.96 hrs, Volume= 12,780 cf, Depth= 2.93"

Runoff by SBUH method, Split Pervious/Imperv., Time Span= 0.00-72.00 hrs, dt= 0.01 hrs
Type I 24-hr 25-Year Rainfall=5.26"

| | Area (ac) | CN | Description |
|---|---|---|---|
| * | 1.200 | 78 | |
| | 1.200 | 78 | 100.00% Pervious Area |

| Tc (min) | Length (feet) | Slope (ft/ft) | Velocity (ft/sec) | Capacity (cfs) | Description |
|---|---|---|---|---|---|
| 10.0 | | | | | **Direct Entry,** |

## Summary for Subcatchment 14: Offsite S3

Runoff = 1.70 cfs @ 9.96 hrs, Volume= 10,330 cf, Depth= 2.93"

Runoff by SBUH method, Split Pervious/Imperv., Time Span= 0.00-72.00 hrs, dt= 0.01 hrs
Type I 24-hr 25-Year Rainfall=5.26"

| | Area (ac) | CN | Description |
|---|---|---|---|
| * | 0.970 | 78 | |
| | 0.970 | 78 | 100.00% Pervious Area |

| Tc (min) | Length (feet) | Slope (ft/ft) | Velocity (ft/sec) | Capacity (cfs) | Description |
|---|---|---|---|---|---|
| 10.0 | | | | | **Direct Entry,** |

## Summary for Subcatchment 15: Offsite S4

Runoff = 1.44 cfs @ 9.96 hrs, Volume= 8,733 cf, Depth= 2.93"

Runoff by SBUH method, Split Pervious/Imperv., Time Span= 0.00-72.00 hrs, dt= 0.01 hrs
Type I 24-hr 25-Year Rainfall=5.26"

| | Area (ac) | CN | Description |
|---|---|---|---|
| * | 0.820 | 78 | |
| | 0.820 | 78 | 100.00% Pervious Area |

| Tc (min) | Length (feet) | Slope (ft/ft) | Velocity (ft/sec) | Capacity (cfs) | Description |
|---|---|---|---|---|---|
| 10.0 | | | | | **Direct Entry,** |

## Summary for Subcatchment 16: Offsite S5

Runoff = 2.63 cfs @ 9.96 hrs, Volume= 15,974 cf, Depth= 2.93"

Runoff by SBUH method, Split Pervious/Imperv., Time Span= 0.00-72.00 hrs, dt= 0.01 hrs
Type I 24-hr 25-Year Rainfall=5.26"

| | Area (ac) | CN | Description |
|---|---|---|---|
| * | 1.500 | 78 | |
| | 1.500 | 78 | 100.00% Pervious Area |

| Tc (min) | Length (feet) | Slope (ft/ft) | Velocity (ft/sec) | Capacity (cfs) | Description |
|---|---|---|---|---|---|
| 10.0 | | | | | **Direct Entry,** |

## Summary for Subcatchment 17: Offsite S6

Runoff = 0.88 cfs @ 9.96 hrs, Volume= 5,325 cf, Depth= 2.93"

Runoff by SBUH method, Split Pervious/Imperv., Time Span= 0.00-72.00 hrs, dt= 0.01 hrs
Type I 24-hr 25-Year Rainfall=5.26"

| | Area (ac) | CN | Description |
|---|---|---|---|
| * | 0.500 | 78 | |
| | 0.500 | 78 | 100.00% Pervious Area |

| Tc (min) | Length (feet) | Slope (ft/ft) | Velocity (ft/sec) | Capacity (cfs) | Description |
|---|---|---|---|---|---|
| 10.0 | | | | | **Direct Entry,** |

## Summary for Subcatchment 18: Offsite S7

Runoff = 2.63 cfs @ 9.96 hrs, Volume= 15,974 cf, Depth= 2.93"

Runoff by SBUH method, Split Pervious/Imperv., Time Span= 0.00-72.00 hrs, dt= 0.01 hrs
Type I 24-hr 25-Year Rainfall=5.26"

| | Area (ac) | CN | Description |
|---|---|---|---|
| * | 1.500 | 78 | |
| | 1.500 | 78 | 100.00% Pervious Area |

| Tc (min) | Length (feet) | Slope (ft/ft) | Velocity (ft/sec) | Capacity (cfs) | Description |
|---|---|---|---|---|---|
| 10.0 | | | | | **Direct Entry,** |

## Summary for Subcatchment 19: Offsite S8

Runoff = 3.33 cfs @ 9.96 hrs, Volume= 20,234 cf, Depth= 2.93"

Runoff by SBUH method, Split Pervious/Imperv., Time Span= 0.00-72.00 hrs, dt= 0.01 hrs
Type I 24-hr 25-Year Rainfall=5.26"

| | Area (ac) | CN | Description |
|---|---|---|---|
| * | 1.900 | 78 | |
| | 1.900 | 78 | 100.00% Pervious Area |

| Tc (min) | Length (feet) | Slope (ft/ft) | Velocity (ft/sec) | Capacity (cfs) | Description |
|---|---|---|---|---|---|
| 10.0 | | | | | **Direct Entry,** |

## Summary for Pond 3: Pond 1

Inflow Area = 71,003 sf, 72.39% Impervious, Inflow Depth = 4.45" for 25-Year event
Inflow = 4.18 cfs @ 9.96 hrs, Volume= 26,307 cf
Outflow = 1.83 cfs @ 10.25 hrs, Volume= 25,073 cf, Atten= 56%, Lag= 17.5 min
Primary = 1.83 cfs @ 10.25 hrs, Volume= 25,073 cf

Routing by Stor-Ind method, Time Span= 0.00-72.00 hrs, dt= 0.01 hrs
Peak Elev= 103.32' @ 10.25 hrs Surf.Area= 3,775 sf Storage= 7,003 cf

Plug-Flow detention time= 148.3 min calculated for 25,069 cf (95% of inflow)
Center-of-Mass det. time= 116.7 min ( 833.6 - 716.9 )

| Volume | Invert | Avail.Storage | Storage Description |
|---|---|---|---|
| #1 | 101.00' | 14,379 cf | **Custom Stage Data (Irregular)** Listed below (Recalc) |

| Elevation (feet) | Surf.Area (sq-ft) | Perim. (feet) | Inc.Store (cubic-feet) | Cum.Store (cubic-feet) | Wet.Area (sq-ft) |
|---|---|---|---|---|---|
| 101.00 | 2,318 | 187.0 | 0 | 0 | 2,318 |
| 102.00 | 2,907 | 207.0 | 2,607 | 2,607 | 2,975 |
| 103.00 | 3,556 | 226.0 | 3,226 | 5,833 | 3,665 |
| 104.00 | 4,264 | 246.0 | 3,905 | 9,738 | 4,452 |
| 105.00 | 5,029 | 266.0 | 4,641 | 14,379 | 5,306 |

| Device | Routing | Invert | Outlet Devices | |
|---|---|---|---|---|
| #1 | Primary | 101.50' | **4.0" Vert. Orifice/Grate** | C= 0.600 |
| #2 | Primary | 102.40' | **8.0" Vert. Orifice/Grate** | C= 0.600 |

**Primary OutFlow** Max=1.83 cfs @ 10.25 hrs HW=103.32' (Free Discharge)
└─**1=Orifice/Grate** (Orifice Controls 0.54 cfs @ 6.19 fps)
└─**2=Orifice/Grate** (Orifice Controls 1.29 cfs @ 3.69 fps)

## Summary for Pond 6: Pond 2

Inflow Area = 174,240 sf, 83.00% Impervious, Inflow Depth = 4.68" for 25-Year event
Inflow = 10.79 cfs @ 9.96 hrs, Volume= 68,004 cf
Outflow = 4.13 cfs @ 10.30 hrs, Volume= 66,153 cf, Atten= 62%, Lag= 20.7 min
Primary = 4.13 cfs @ 10.30 hrs, Volume= 66,153 cf

Routing by Stor-Ind method, Time Span= 0.00-72.00 hrs, dt= 0.01 hrs
Peak Elev= 78.89' @ 10.30 hrs Surf.Area= 6,810 sf Storage= 17,234 cf

Plug-Flow detention time= 118.2 min calculated for 66,153 cf (97% of inflow)
Center-of-Mass det. time= 99.0 min ( 807.8 - 708.8 )

| Volume | Invert | Avail.Storage | Storage Description |
|---|---|---|---|
| #1 | 75.50' | 43,957 cf | **Custom Stage Data (Prismatic)** Listed below (Recalc) |

| Elevation (feet) | Surf.Area (sq-ft) | Inc.Store (cubic-feet) | Cum.Store (cubic-feet) |
|---|---|---|---|
| 75.50 | 3,447 | 0 | 0 |
| 76.00 | 3,915 | 1,841 | 1,841 |
| 77.00 | 4,855 | 4,385 | 6,226 |
| 78.00 | 5,860 | 5,358 | 11,583 |
| 79.00 | 6,925 | 6,393 | 17,976 |
| 80.00 | 8,049 | 7,487 | 25,463 |
| 81.00 | 9,232 | 8,641 | 34,103 |
| 82.00 | 10,475 | 9,854 | 43,957 |

| Device | Routing | Invert | Outlet Devices | |
|---|---|---|---|---|
| #1 | Primary | 76.00' | **6.0" Vert. Orifice/Grate** | C= 0.600 |
| #2 | Primary | 77.50' | **10.0" Vert. Orifice/Grate** | C= 0.600 |

**Primary OutFlow** Max=4.13 cfs @ 10.30 hrs HW=78.89' (Free Discharge)
└─**1=Orifice/Grate** (Orifice Controls 1.54 cfs @ 7.83 fps)
└─**2=Orifice/Grate** (Orifice Controls 2.59 cfs @ 4.76 fps)

## Summary for Subcatchment 1: DMA 1- Pre Project

Runoff = 4.26 cfs @ 9.96 hrs, Volume= 25,526 cf, Depth= 3.72"

Runoff by SBUH method, Split Pervious/Imperv., Time Span= 0.00-72.00 hrs, dt= 0.01 hrs
Type I 24-hr 50-Year Rainfall=6.16"

| | Area (ac) | CN | Description |
|---|---|---|---|
| * | 1.890 | 78 | |
| | 1.890 | 78 | 100.00% Pervious Area |

| Tc (min) | Length (feet) | Slope (ft/ft) | Velocity (ft/sec) | Capacity (cfs) | Description |
|---|---|---|---|---|---|
| 10.0 | | | | | **Direct Entry,** |

## Summary for Subcatchment 2: DMA 1-Post Project

Runoff = 5.00 cfs @ 9.96 hrs, Volume= 31,443 cf, Depth= 5.31"

Runoff by SBUH method, Split Pervious/Imperv., Time Span= 0.00-72.00 hrs, dt= 0.01 hrs
Type I 24-hr 50-Year Rainfall=6.16"

| | Area (ac) | CN | Description |
|---|---|---|---|
| * | 1.180 | 98 | |
| * | 0.450 | 78 | |
| | 1.630 | 92 | Weighted Average |
| | 0.450 | 78 | 27.61% Pervious Area |
| | 1.180 | 98 | 72.39% Impervious Area |

| Tc (min) | Length (feet) | Slope (ft/ft) | Velocity (ft/sec) | Capacity (cfs) | Description |
|---|---|---|---|---|---|
| 10.0 | | | | | **Direct Entry,** |

## Summary for Subcatchment 4: DMA 2 - Pre development

Runoff = 9.30 cfs @ 9.96 hrs, Volume= 55,508 cf, Depth= 3.82"

Runoff by SBUH method, Split Pervious/Imperv., Time Span= 0.00-72.00 hrs, dt= 0.01 hrs
Type I 24-hr 50-Year Rainfall=6.16"

| | Area (ac) | CN | Description |
|---|---|---|---|
| * | 3.320 | 79 | Pasture/grassland/range, Fair, HSG D |
| * | 0.680 | 79 | |
| | 4.000 | 79 | Weighted Average |
| | 4.000 | 79 | 100.00% Pervious Area |

| Tc (min) | Length (feet) | Slope (ft/ft) | Velocity (ft/sec) | Capacity (cfs) | Description |
|---|---|---|---|---|---|
| 10.0 | | | | | **Direct Entry,** |

## Summary for Subcatchment 5: DMA 2 - Post Project

Runoff = 12.79 cfs @ 9.96 hrs, Volume= 80,802 cf, Depth= 5.56"

Runoff by SBUH method, Split Pervious/Imperv., Time Span= 0.00-72.00 hrs, dt= 0.01 hrs
Type I 24-hr 50-Year Rainfall=6.16"

| | Area (ac) | CN | Description |
|---|---|---|---|
| * | 3.320 | 98 | Pasture/grassland/range, Fair, HSG D |
| * | 0.680 | 79 | |
| | 4.000 | 95 | Weighted Average |
| | 0.680 | 79 | 17.00% Pervious Area |
| | 3.320 | 98 | 83.00% Impervious Area |

| Tc (min) | Length (feet) | Slope (ft/ft) | Velocity (ft/sec) | Capacity (cfs) | Description |
|---|---|---|---|---|---|
| 10.0 | | | | | **Direct Entry,** |

## Summary for Subcatchment 7: North 1

Runoff = 20.97 cfs @ 9.96 hrs, Volume= 125,604 cf, Depth= 3.72"

Runoff by SBUH method, Split Pervious/Imperv., Time Span= 0.00-72.00 hrs, dt= 0.01 hrs
Type I 24-hr 50-Year Rainfall=6.16"

| | Area (ac) | CN | Description |
|---|---|---|---|
| * | 9.300 | 78 | |
| | 9.300 | 78 | 100.00% Pervious Area |

| Tc (min) | Length (feet) | Slope (ft/ft) | Velocity (ft/sec) | Capacity (cfs) | Description |
|---|---|---|---|---|---|
| 10.0 | | | | | **Direct Entry,** |

## Summary for Subcatchment 8: Offsite N2

Runoff = 0.95 cfs @ 9.96 hrs, Volume= 5,672 cf, Depth= 3.72"

Runoff by SBUH method, Split Pervious/Imperv., Time Span= 0.00-72.00 hrs, dt= 0.01 hrs
Type I 24-hr 50-Year Rainfall=6.16"

| | Area (ac) | CN | Description |
|---|---|---|---|
| * | 0.420 | 78 | |
| | 0.420 | 78 | 100.00% Pervious Area |

| Tc (min) | Length (feet) | Slope (ft/ft) | Velocity (ft/sec) | Capacity (cfs) | Description |
|---|---|---|---|---|---|
| 10.0 | | | | | **Direct Entry,** |

## Summary for Subcatchment 9: Offsite N3

Runoff = 2.03 cfs @ 9.96 hrs, Volume= 12,155 cf, Depth= 3.72"

Runoff by SBUH method, Split Pervious/Imperv., Time Span= 0.00-72.00 hrs, dt= 0.01 hrs
Type I 24-hr 50-Year Rainfall=6.16"

| | Area (ac) | CN | Description |
|---|---|---|---|
| * | 0.900 | 78 | |
| | 0.900 | 78 | 100.00% Pervious Area |

| Tc (min) | Length (feet) | Slope (ft/ft) | Velocity (ft/sec) | Capacity (cfs) | Description |
|---|---|---|---|---|---|
| 10.0 | | | | | **Direct Entry,** |

## Summary for Subcatchment 10: Offsite N4

Runoff = 1.11 cfs @ 9.96 hrs, Volume= 6,618 cf, Depth= 3.72"

Runoff by SBUH method, Split Pervious/Imperv., Time Span= 0.00-72.00 hrs, dt= 0.01 hrs
Type I 24-hr 50-Year Rainfall=6.16"

| | Area (ac) | CN | Description |
|---|---|---|---|
| * | 0.490 | 78 | |
| | 0.490 | 78 | 100.00% Pervious Area |

| Tc (min) | Length (feet) | Slope (ft/ft) | Velocity (ft/sec) | Capacity (cfs) | Description |
|---|---|---|---|---|---|
| 10.0 | | | | | **Direct Entry,** |

## Summary for Subcatchment 11: Offsite N5

Runoff = 0.65 cfs @ 9.96 hrs, Volume= 3,917 cf, Depth= 3.72"

Runoff by SBUH method, Split Pervious/Imperv., Time Span= 0.00-72.00 hrs, dt= 0.01 hrs
Type I 24-hr 50-Year Rainfall=6.16"

| | Area (ac) | CN | Description |
|---|---|---|---|
| * | 0.290 | 78 | |
| | 0.290 | 78 | 100.00% Pervious Area |

| Tc (min) | Length (feet) | Slope (ft/ft) | Velocity (ft/sec) | Capacity (cfs) | Description |
|---|---|---|---|---|---|
| 10.0 | | | | | **Direct Entry,** |

## Summary for Subcatchment 12: Offsite S1

Runoff = 24.58 cfs @ 9.96 hrs, Volume= 147,213 cf, Depth= 3.72"

Runoff by SBUH method, Split Pervious/Imperv., Time Span= 0.00-72.00 hrs, dt= 0.01 hrs
Type I 24-hr 50-Year Rainfall=6.16"

| | Area (ac) | CN | Description |
|---|---|---|---|
| * | 10.900 | 78 | |
| | 10.900 | 78 | 100.00% Pervious Area |

| Tc (min) | Length (feet) | Slope (ft/ft) | Velocity (ft/sec) | Capacity (cfs) | Description |
|---|---|---|---|---|---|
| 10.0 | | | | | **Direct Entry,** |

## Summary for Subcatchment 13: Offsite S2

Runoff = 2.71 cfs @ 9.96 hrs, Volume= 16,207 cf, Depth= 3.72"

Runoff by SBUH method, Split Pervious/Imperv., Time Span= 0.00-72.00 hrs, dt= 0.01 hrs
Type I 24-hr 50-Year Rainfall=6.16"

| | Area (ac) | CN | Description |
|---|---|---|---|
| * | 1.200 | 78 | |
| | 1.200 | 78 | 100.00% Pervious Area |

| Tc (min) | Length (feet) | Slope (ft/ft) | Velocity (ft/sec) | Capacity (cfs) | Description |
|---|---|---|---|---|---|
| 10.0 | | | | | **Direct Entry,** |

## Summary for Subcatchment 14: Offsite S3

Runoff = 2.19 cfs @ 9.96 hrs, Volume= 13,101 cf, Depth= 3.72"

Runoff by SBUH method, Split Pervious/Imperv., Time Span= 0.00-72.00 hrs, dt= 0.01 hrs
Type I 24-hr 50-Year Rainfall=6.16"

| | Area (ac) | CN | Description |
|---|---|---|---|
| * | 0.970 | 78 | |
| | 0.970 | 78 | 100.00% Pervious Area |

| Tc (min) | Length (feet) | Slope (ft/ft) | Velocity (ft/sec) | Capacity (cfs) | Description |
|---|---|---|---|---|---|
| 10.0 | | | | | **Direct Entry,** |

## Summary for Subcatchment 15: Offsite S4

Runoff = 1.85 cfs @ 9.96 hrs, Volume= 11,075 cf, Depth= 3.72"

Runoff by SBUH method, Split Pervious/Imperv., Time Span= 0.00-72.00 hrs, dt= 0.01 hrs
Type I 24-hr 50-Year Rainfall=6.16"

| | Area (ac) | CN | Description |
|---|---|---|---|
| * | 0.820 | 78 | |
| | 0.820 | 78 | 100.00% Pervious Area |

| Tc (min) | Length (feet) | Slope (ft/ft) | Velocity (ft/sec) | Capacity (cfs) | Description |
|---|---|---|---|---|---|
| 10.0 | | | | | **Direct Entry,** |

## Summary for Subcatchment 16: Offsite S5

Runoff = 3.38 cfs @ 9.96 hrs, Volume= 20,259 cf, Depth= 3.72"

Runoff by SBUH method, Split Pervious/Imperv., Time Span= 0.00-72.00 hrs, dt= 0.01 hrs
Type I 24-hr 50-Year Rainfall=6.16"

| | Area (ac) | CN | Description |
|---|---|---|---|
| * | 1.500 | 78 | |
| | 1.500 | 78 | 100.00% Pervious Area |

| Tc (min) | Length (feet) | Slope (ft/ft) | Velocity (ft/sec) | Capacity (cfs) | Description |
|---|---|---|---|---|---|
| 10.0 | | | | | **Direct Entry,** |

## Summary for Subcatchment 17: Offsite S6

Runoff = 1.13 cfs @ 9.96 hrs, Volume= 6,753 cf, Depth= 3.72"

Runoff by SBUH method, Split Pervious/Imperv., Time Span= 0.00-72.00 hrs, dt= 0.01 hrs
Type I 24-hr 50-Year Rainfall=6.16"

| | Area (ac) | CN | Description |
|---|---|---|---|
| * | 0.500 | 78 | |
| | 0.500 | 78 | 100.00% Pervious Area |

| Tc (min) | Length (feet) | Slope (ft/ft) | Velocity (ft/sec) | Capacity (cfs) | Description |
|---|---|---|---|---|---|
| 10.0 | | | | | **Direct Entry,** |

## Summary for Subcatchment 18: Offsite S7

Runoff = 3.38 cfs @ 9.96 hrs, Volume= 20,259 cf, Depth= 3.72"

Runoff by SBUH method, Split Pervious/Imperv., Time Span= 0.00-72.00 hrs, dt= 0.01 hrs
Type I 24-hr 50-Year Rainfall=6.16"

| | Area (ac) | CN | Description |
|---|---|---|---|
| * | 1.500 | 78 | |
| | 1.500 | 78 | 100.00% Pervious Area |

| Tc (min) | Length (feet) | Slope (ft/ft) | Velocity (ft/sec) | Capacity (cfs) | Description |
|---|---|---|---|---|---|
| 10.0 | | | | | **Direct Entry,** |

## Summary for Subcatchment 19: Offsite S8

Runoff = 4.28 cfs @ 9.96 hrs, Volume= 25,661 cf, Depth= 3.72"

Runoff by SBUH method, Split Pervious/Imperv., Time Span= 0.00-72.00 hrs, dt= 0.01 hrs
Type I 24-hr 50-Year Rainfall=6.16"

| | Area (ac) | CN | Description |
|---|---|---|---|
| * | 1.900 | 78 | |
| | 1.900 | 78 | 100.00% Pervious Area |

| Tc (min) | Length (feet) | Slope (ft/ft) | Velocity (ft/sec) | Capacity (cfs) | Description |
|---|---|---|---|---|---|
| 10.0 | | | | | **Direct Entry,** |

## Summary for Pond 3: Pond 1

Inflow Area = 71,003 sf, 72.39% Impervious, Inflow Depth = 5.31" for 50-Year event
Inflow = 5.00 cfs @ 9.96 hrs, Volume= 31,443 cf
Outflow = 2.14 cfs @ 10.26 hrs, Volume= 30,209 cf, Atten= 57%, Lag= 18.0 min
Primary = 2.14 cfs @ 10.26 hrs, Volume= 30,209 cf

Routing by Stor-Ind method, Time Span= 0.00-72.00 hrs, dt= 0.01 hrs
Peak Elev= 103.59' @ 10.26 hrs Surf.Area= 3,966 sf Storage= 8,051 cf

Plug-Flow detention time= 137.8 min calculated for 30,209 cf (96% of inflow)
Center-of-Mass det. time= 110.7 min ( 824.5 - 713.8 )

| Volume | Invert | Avail.Storage | Storage Description |
|---|---|---|---|
| #1 | 101.00' | 14,379 cf | **Custom Stage Data (Irregular)** Listed below (Recalc) |

| Elevation (feet) | Surf.Area (sq-ft) | Perim. (feet) | Inc.Store (cubic-feet) | Cum.Store (cubic-feet) | Wet.Area (sq-ft) |
|---|---|---|---|---|---|
| 101.00 | 2,318 | 187.0 | 0 | 0 | 2,318 |
| 102.00 | 2,907 | 207.0 | 2,607 | 2,607 | 2,975 |
| 103.00 | 3,556 | 226.0 | 3,226 | 5,833 | 3,665 |
| 104.00 | 4,264 | 246.0 | 3,905 | 9,738 | 4,452 |
| 105.00 | 5,029 | 266.0 | 4,641 | 14,379 | 5,306 |

| Device | Routing | Invert | Outlet Devices | |
|---|---|---|---|---|
| #1 | Primary | 101.50' | **4.0" Vert. Orifice/Grate** | C= 0.600 |
| #2 | Primary | 102.40' | **8.0" Vert. Orifice/Grate** | C= 0.600 |

**Primary OutFlow** Max=2.14 cfs @ 10.26 hrs HW=103.59' (Free Discharge)
└─**1=Orifice/Grate** (Orifice Controls 0.58 cfs @ 6.68 fps)
└─**2=Orifice/Grate** (Orifice Controls 1.56 cfs @ 4.46 fps)

## Summary for Pond 6: Pond 2

Inflow Area = 174,240 sf, 83.00% Impervious, Inflow Depth = 5.56" for 50-Year event
Inflow = 12.79 cfs @ 9.96 hrs, Volume= 80,802 cf
Outflow = 4.75 cfs @ 10.31 hrs, Volume= 78,951 cf, Atten= 63%, Lag= 21.5 min
Primary = 4.75 cfs @ 10.31 hrs, Volume= 78,951 cf

Routing by Stor-Ind method, Time Span= 0.00-72.00 hrs, dt= 0.01 hrs
Peak Elev= 79.31' @ 10.31 hrs Surf.Area= 7,272 sf Storage= 20,167 cf

Plug-Flow detention time= 112.3 min calculated for 78,951 cf (98% of inflow)
Center-of-Mass det. time= 95.9 min ( 801.8 - 705.9 )

| Volume | Invert | Avail.Storage | Storage Description |
|---|---|---|---|
| #1 | 75.50' | 43,957 cf | **Custom Stage Data (Prismatic)** Listed below (Recalc) |

| Elevation (feet) | Surf.Area (sq-ft) | Inc.Store (cubic-feet) | Cum.Store (cubic-feet) |
|---|---|---|---|
| 75.50 | 3,447 | 0 | 0 |
| 76.00 | 3,915 | 1,841 | 1,841 |
| 77.00 | 4,855 | 4,385 | 6,226 |
| 78.00 | 5,860 | 5,358 | 11,583 |
| 79.00 | 6,925 | 6,393 | 17,976 |
| 80.00 | 8,049 | 7,487 | 25,463 |
| 81.00 | 9,232 | 8,641 | 34,103 |
| 82.00 | 10,475 | 9,854 | 43,957 |

| Device | Routing | Invert | Outlet Devices | |
|---|---|---|---|---|
| #1 | Primary | 76.00' | **6.0" Vert. Orifice/Grate** | C= 0.600 |
| #2 | Primary | 77.50' | **10.0" Vert. Orifice/Grate** | C= 0.600 |

**Primary OutFlow** Max=4.75 cfs @ 10.31 hrs HW=79.31' (Free Discharge)
└─**1=Orifice/Grate** (Orifice Controls 1.65 cfs @ 8.42 fps)
└─**2=Orifice/Grate** (Orifice Controls 3.10 cfs @ 5.68 fps)

## Summary for Subcatchment 1: DMA 1- Pre Project

Runoff = 5.29 cfs @ 9.96 hrs, Volume= 31,448 cf, Depth= 4.58"

Runoff by SBUH method, Split Pervious/Imperv., Time Span= 0.00-72.00 hrs, dt= 0.01 hrs
Type I 24-hr 100-Year Rainfall=7.12"

| | Area (ac) | CN | Description |
|---|---|---|---|
| * | 1.890 | 78 | |
| | 1.890 | 78 | 100.00% Pervious Area |

| Tc (min) | Length (feet) | Slope (ft/ft) | Velocity (ft/sec) | Capacity (cfs) | Description |
|---|---|---|---|---|---|
| 10.0 | | | | | **Direct Entry,** |

## Summary for Subcatchment 2: DMA 1-Post Project

Runoff = 5.87 cfs @ 9.96 hrs, Volume= 36,961 cf, Depth= 6.25"

Runoff by SBUH method, Split Pervious/Imperv., Time Span= 0.00-72.00 hrs, dt= 0.01 hrs
Type I 24-hr 100-Year Rainfall=7.12"

| | Area (ac) | CN | Description |
|---|---|---|---|
| * | 1.180 | 98 | |
| * | 0.450 | 78 | |
| | 1.630 | 92 | Weighted Average |
| | 0.450 | 78 | 27.61% Pervious Area |
| | 1.180 | 98 | 72.39% Impervious Area |

| Tc (min) | Length (feet) | Slope (ft/ft) | Velocity (ft/sec) | Capacity (cfs) | Description |
|---|---|---|---|---|---|
| 10.0 | | | | | **Direct Entry,** |

## Summary for Subcatchment 4: DMA 2 - Pre development

Runoff = 11.50 cfs @ 9.96 hrs, Volume= 68,162 cf, Depth= 4.69"

Runoff by SBUH method, Split Pervious/Imperv., Time Span= 0.00-72.00 hrs, dt= 0.01 hrs
Type I 24-hr 100-Year Rainfall=7.12"

| | Area (ac) | CN | Description |
|---|---|---|---|
| * | 3.320 | 79 | Pasture/grassland/range, Fair, HSG D |
| * | 0.680 | 79 | |
| | 4.000 | 79 | Weighted Average |
| | 4.000 | 79 | 100.00% Pervious Area |

| Tc (min) | Length (feet) | Slope (ft/ft) | Velocity (ft/sec) | Capacity (cfs) | Description |
|---|---|---|---|---|---|
| 10.0 | | | | | **Direct Entry,** |

## Summary for Subcatchment 5: DMA 2 - Post Project

Runoff = 14.93 cfs @ 9.96 hrs, Volume= 94,512 cf, Depth= 6.51"

Runoff by SBUH method, Split Pervious/Imperv., Time Span= 0.00-72.00 hrs, dt= 0.01 hrs
Type I 24-hr 100-Year Rainfall=7.12"

| | Area (ac) | CN | Description |
|---|---|---|---|
| * | 3.320 | 98 | Pasture/grassland/range, Fair, HSG D |
| * | 0.680 | 79 | |
| | 4.000 | 95 | Weighted Average |
| | 0.680 | 79 | 17.00% Pervious Area |
| | 3.320 | 98 | 83.00% Impervious Area |

| Tc (min) | Length (feet) | Slope (ft/ft) | Velocity (ft/sec) | Capacity (cfs) | Description |
|---|---|---|---|---|---|
| 10.0 | | | | | **Direct Entry,** |

## Summary for Subcatchment 7: North 1

Runoff = 26.04 cfs @ 9.96 hrs, Volume= 154,745 cf, Depth= 4.58"

Runoff by SBUH method, Split Pervious/Imperv., Time Span= 0.00-72.00 hrs, dt= 0.01 hrs
Type I 24-hr 100-Year Rainfall=7.12"

| | Area (ac) | CN | Description |
|---|---|---|---|
| * | 9.300 | 78 | |
| | 9.300 | 78 | 100.00% Pervious Area |

| Tc (min) | Length (feet) | Slope (ft/ft) | Velocity (ft/sec) | Capacity (cfs) | Description |
|---|---|---|---|---|---|
| 10.0 | | | | | **Direct Entry,** |

## Summary for Subcatchment 8: Offsite N2

Runoff = 1.18 cfs @ 9.96 hrs, Volume= 6,988 cf, Depth= 4.58"

Runoff by SBUH method, Split Pervious/Imperv., Time Span= 0.00-72.00 hrs, dt= 0.01 hrs
Type I 24-hr 100-Year Rainfall=7.12"

| | Area (ac) | CN | Description |
|---|---|---|---|
| * | 0.420 | 78 | |
| | 0.420 | 78 | 100.00% Pervious Area |

| Tc (min) | Length (feet) | Slope (ft/ft) | Velocity (ft/sec) | Capacity (cfs) | Description |
|---|---|---|---|---|---|
| 10.0 | | | | | **Direct Entry,** |

## Summary for Subcatchment 9: Offsite N3

Runoff = 2.52 cfs @ 9.96 hrs, Volume= 14,975 cf, Depth= 4.58"

Runoff by SBUH method, Split Pervious/Imperv., Time Span= 0.00-72.00 hrs, dt= 0.01 hrs
Type I 24-hr 100-Year Rainfall=7.12"

| | Area (ac) | CN | Description |
|---|---|---|---|
| * | 0.900 | 78 | |
| | 0.900 | 78 | 100.00% Pervious Area |

| Tc (min) | Length (feet) | Slope (ft/ft) | Velocity (ft/sec) | Capacity (cfs) | Description |
|---|---|---|---|---|---|
| 10.0 | | | | | **Direct Entry,** |

## Summary for Subcatchment 10: Offsite N4

Runoff = 1.37 cfs @ 9.96 hrs, Volume= 8,153 cf, Depth= 4.58"

Runoff by SBUH method, Split Pervious/Imperv., Time Span= 0.00-72.00 hrs, dt= 0.01 hrs
Type I 24-hr 100-Year Rainfall=7.12"

| | Area (ac) | CN | Description |
|---|---|---|---|
| * | 0.490 | 78 | |
| | 0.490 | 78 | 100.00% Pervious Area |

| Tc (min) | Length (feet) | Slope (ft/ft) | Velocity (ft/sec) | Capacity (cfs) | Description |
|---|---|---|---|---|---|
| 10.0 | | | | | **Direct Entry,** |

## Summary for Subcatchment 11: Offsite N5

Runoff = 0.81 cfs @ 9.96 hrs, Volume= 4,825 cf, Depth= 4.58"

Runoff by SBUH method, Split Pervious/Imperv., Time Span= 0.00-72.00 hrs, dt= 0.01 hrs
Type I 24-hr 100-Year Rainfall=7.12"

| | Area (ac) | CN | Description |
|---|---|---|---|
| * | 0.290 | 78 | |
| | 0.290 | 78 | 100.00% Pervious Area |

| Tc (min) | Length (feet) | Slope (ft/ft) | Velocity (ft/sec) | Capacity (cfs) | Description |
|---|---|---|---|---|---|
| 10.0 | | | | | **Direct Entry,** |

## Summary for Subcatchment 12: Offsite S1

Runoff = 30.53 cfs @ 9.96 hrs, Volume= 181,368 cf, Depth= 4.58"

Runoff by SBUH method, Split Pervious/Imperv., Time Span= 0.00-72.00 hrs, dt= 0.01 hrs
Type I 24-hr 100-Year Rainfall=7.12"

| | Area (ac) | CN | Description |
|---|---|---|---|
| * | 10.900 | 78 | |
| | 10.900 | 78 | 100.00% Pervious Area |

| Tc (min) | Length (feet) | Slope (ft/ft) | Velocity (ft/sec) | Capacity (cfs) | Description |
|---|---|---|---|---|---|
| 10.0 | | | | | **Direct Entry,** |

## Summary for Subcatchment 13: Offsite S2

Runoff = 3.36 cfs @ 9.96 hrs, Volume= 19,967 cf, Depth= 4.58"

Runoff by SBUH method, Split Pervious/Imperv., Time Span= 0.00-72.00 hrs, dt= 0.01 hrs
Type I 24-hr 100-Year Rainfall=7.12"

| | Area (ac) | CN | Description |
|---|---|---|---|
| * | 1.200 | 78 | |
| | 1.200 | 78 | 100.00% Pervious Area |

| Tc (min) | Length (feet) | Slope (ft/ft) | Velocity (ft/sec) | Capacity (cfs) | Description |
|---|---|---|---|---|---|
| 10.0 | | | | | **Direct Entry,** |

## Summary for Subcatchment 14: Offsite S3

Runoff = 2.72 cfs @ 9.96 hrs, Volume= 16,140 cf, Depth= 4.58"

Runoff by SBUH method, Split Pervious/Imperv., Time Span= 0.00-72.00 hrs, dt= 0.01 hrs
Type I 24-hr 100-Year Rainfall=7.12"

| | Area (ac) | CN | Description |
|---|---|---|---|
| * | 0.970 | 78 | |
| | 0.970 | 78 | 100.00% Pervious Area |

| Tc (min) | Length (feet) | Slope (ft/ft) | Velocity (ft/sec) | Capacity (cfs) | Description |
|---|---|---|---|---|---|
| 10.0 | | | | | **Direct Entry,** |

## Summary for Subcatchment 15: Offsite S4

Runoff = 2.30 cfs @ 9.96 hrs, Volume= 13,644 cf, Depth= 4.58"

Runoff by SBUH method, Split Pervious/Imperv., Time Span= 0.00-72.00 hrs, dt= 0.01 hrs
Type I 24-hr 100-Year Rainfall=7.12"

| | Area (ac) | CN | Description |
|---|---|---|---|
| * | 0.820 | 78 | |
| | 0.820 | 78 | 100.00% Pervious Area |

| Tc (min) | Length (feet) | Slope (ft/ft) | Velocity (ft/sec) | Capacity (cfs) | Description |
|---|---|---|---|---|---|
| 10.0 | | | | | **Direct Entry,** |

## Summary for Subcatchment 16: Offsite S5

Runoff = 4.20 cfs @ 9.96 hrs, Volume= 24,959 cf, Depth= 4.58"

Runoff by SBUH method, Split Pervious/Imperv., Time Span= 0.00-72.00 hrs, dt= 0.01 hrs
Type I 24-hr 100-Year Rainfall=7.12"

| | Area (ac) | CN | Description |
|---|---|---|---|
| * | 1.500 | 78 | |
| | 1.500 | 78 | 100.00% Pervious Area |

| Tc (min) | Length (feet) | Slope (ft/ft) | Velocity (ft/sec) | Capacity (cfs) | Description |
|---|---|---|---|---|---|
| 10.0 | | | | | **Direct Entry,** |

## Summary for Subcatchment 17: Offsite S6

Runoff = 1.40 cfs @ 9.96 hrs, Volume= 8,320 cf, Depth= 4.58"

Runoff by SBUH method, Split Pervious/Imperv., Time Span= 0.00-72.00 hrs, dt= 0.01 hrs
Type I 24-hr 100-Year Rainfall=7.12"

| | Area (ac) | CN | Description |
|---|---|---|---|
| * | 0.500 | 78 | |
| | 0.500 | 78 | 100.00% Pervious Area |

| Tc (min) | Length (feet) | Slope (ft/ft) | Velocity (ft/sec) | Capacity (cfs) | Description |
|---|---|---|---|---|---|
| 10.0 | | | | | **Direct Entry,** |

## Summary for Subcatchment 18: Offsite S7

Runoff = 4.20 cfs @ 9.96 hrs, Volume= 24,959 cf, Depth= 4.58"

Runoff by SBUH method, Split Pervious/Imperv., Time Span= 0.00-72.00 hrs, dt= 0.01 hrs
Type I 24-hr 100-Year Rainfall=7.12"

| | Area (ac) | CN | Description |
|---|---|---|---|
| * | 1.500 | 78 | |
| | 1.500 | 78 | 100.00% Pervious Area |

| Tc (min) | Length (feet) | Slope (ft/ft) | Velocity (ft/sec) | Capacity (cfs) | Description |
|---|---|---|---|---|---|
| 10.0 | | | | | **Direct Entry,** |

## Summary for Subcatchment 19: Offsite S8

Runoff = 5.32 cfs @ 9.96 hrs, Volume= 31,615 cf, Depth= 4.58"

Runoff by SBUH method, Split Pervious/Imperv., Time Span= 0.00-72.00 hrs, dt= 0.01 hrs
Type I 24-hr 100-Year Rainfall=7.12"

| | Area (ac) | CN | Description |
|---|---|---|---|
| * | 1.900 | 78 | |
| | 1.900 | 78 | 100.00% Pervious Area |

| Tc (min) | Length (feet) | Slope (ft/ft) | Velocity (ft/sec) | Capacity (cfs) | Description |
|---|---|---|---|---|---|
| 10.0 | | | | | **Direct Entry,** |

## Summary for Pond 3: Pond 1

Inflow Area = 71,003 sf, 72.39% Impervious, Inflow Depth = 6.25" for 100-Year event
Inflow = 5.87 cfs @ 9.96 hrs, Volume= 36,961 cf
Outflow = 2.42 cfs @ 10.27 hrs, Volume= 35,727 cf, Atten= 59%, Lag= 18.9 min
Primary = 2.42 cfs @ 10.27 hrs, Volume= 35,727 cf

Routing by Stor-Ind method, Time Span= 0.00-72.00 hrs, dt= 0.01 hrs
Peak Elev= 103.87' @ 10.27 hrs Surf.Area= 4,168 sf Storage= 9,187 cf

Plug-Flow detention time= 129.1 min calculated for 35,722 cf (97% of inflow)
Center-of-Mass det. time= 106.1 min ( 817.3 - 711.1 )

| Volume | Invert | Avail.Storage | Storage Description |
|---|---|---|---|
| #1 | 101.00' | 14,379 cf | **Custom Stage Data (Irregular)** Listed below (Recalc) |

| Elevation (feet) | Surf.Area (sq-ft) | Perim. (feet) | Inc.Store (cubic-feet) | Cum.Store (cubic-feet) | Wet.Area (sq-ft) |
|---|---|---|---|---|---|
| 101.00 | 2,318 | 187.0 | 0 | 0 | 2,318 |
| 102.00 | 2,907 | 207.0 | 2,607 | 2,607 | 2,975 |
| 103.00 | 3,556 | 226.0 | 3,226 | 5,833 | 3,665 |
| 104.00 | 4,264 | 246.0 | 3,905 | 9,738 | 4,452 |
| 105.00 | 5,029 | 266.0 | 4,641 | 14,379 | 5,306 |

| Device | Routing | Invert | Outlet Devices | |
|---|---|---|---|---|
| #1 | Primary | 101.50' | **4.0" Vert. Orifice/Grate** | C= 0.600 |
| #2 | Primary | 102.40' | **8.0" Vert. Orifice/Grate** | C= 0.600 |

**Primary OutFlow** Max=2.42 cfs @ 10.27 hrs HW=103.87' (Free Discharge)
└─**1=Orifice/Grate** (Orifice Controls 0.62 cfs @ 7.15 fps)
└─**2=Orifice/Grate** (Orifice Controls 1.79 cfs @ 5.13 fps)

## Summary for Pond 6: Pond 2

Inflow Area = 174,240 sf, 83.00% Impervious, Inflow Depth = 6.51" for 100-Year event
Inflow = 14.93 cfs @ 9.96 hrs, Volume= 94,512 cf
Outflow = 5.31 cfs @ 10.33 hrs, Volume= 92,661 cf, Atten= 64%, Lag= 22.6 min
Primary = 5.31 cfs @ 10.33 hrs, Volume= 92,661 cf

Routing by Stor-Ind method, Time Span= 0.00-72.00 hrs, dt= 0.01 hrs
Peak Elev= 79.74' @ 10.33 hrs Surf.Area= 7,753 sf Storage= 23,382 cf

Plug-Flow detention time= 107.9 min calculated for 92,648 cf (98% of inflow)
Center-of-Mass det. time= 94.1 min ( 797.5 - 703.4 )

| Volume | Invert | Avail.Storage | Storage Description |
|---|---|---|---|
| #1 | 75.50' | 43,957 cf | **Custom Stage Data (Prismatic)** Listed below (Recalc) |

| Elevation (feet) | Surf.Area (sq-ft) | Inc.Store (cubic-feet) | Cum.Store (cubic-feet) |
|---|---|---|---|
| 75.50 | 3,447 | 0 | 0 |
| 76.00 | 3,915 | 1,841 | 1,841 |
| 77.00 | 4,855 | 4,385 | 6,226 |
| 78.00 | 5,860 | 5,358 | 11,583 |
| 79.00 | 6,925 | 6,393 | 17,976 |
| 80.00 | 8,049 | 7,487 | 25,463 |
| 81.00 | 9,232 | 8,641 | 34,103 |
| 82.00 | 10,475 | 9,854 | 43,957 |

| Device | Routing | Invert | Outlet Devices | |
|---|---|---|---|---|
| #1 | Primary | 76.00' | **6.0" Vert. Orifice/Grate** | C= 0.600 |
| #2 | Primary | 77.50' | **10.0" Vert. Orifice/Grate** | C= 0.600 |

**Primary OutFlow** Max=5.31 cfs @ 10.33 hrs HW=79.74' (Free Discharge)
└─**1=Orifice/Grate** (Orifice Controls 1.77 cfs @ 8.99 fps)
└─**2=Orifice/Grate** (Orifice Controls 3.54 cfs @ 6.50 fps)

7/30/2019 19768

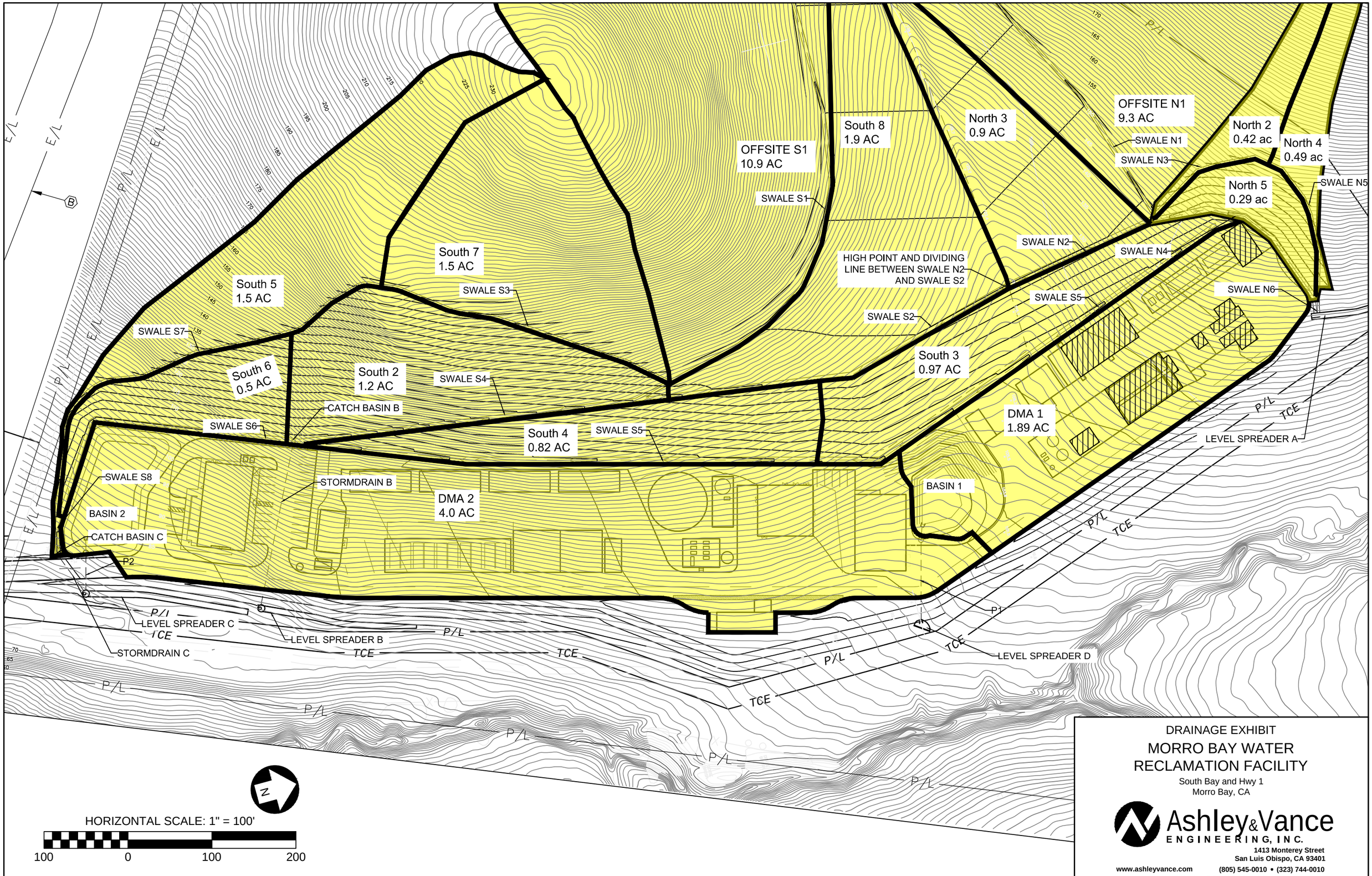


DRAINAGE EXHIBIT

MORRO BAY WATER RECLAMATION FACILITY

South Bay and Hwy 1
Morro Bay, CA

Ashley & Vance ENGINEERING, INC.
1413 Monterey Street
San Luis Obispo, CA 93401
www.ashleyvance.com
(805) 545-0010 • (323) 744-0010
CIVIL • STRUCTURAL

7/30/2019 19768