CITY OF MORRO BAY

WATER RECLAMATION FACILITY PROJECT
LIFT STATIONS AND OFFSITE PIPELINES

CONFORMED SET
VOLUME 3 - DRAWINGS

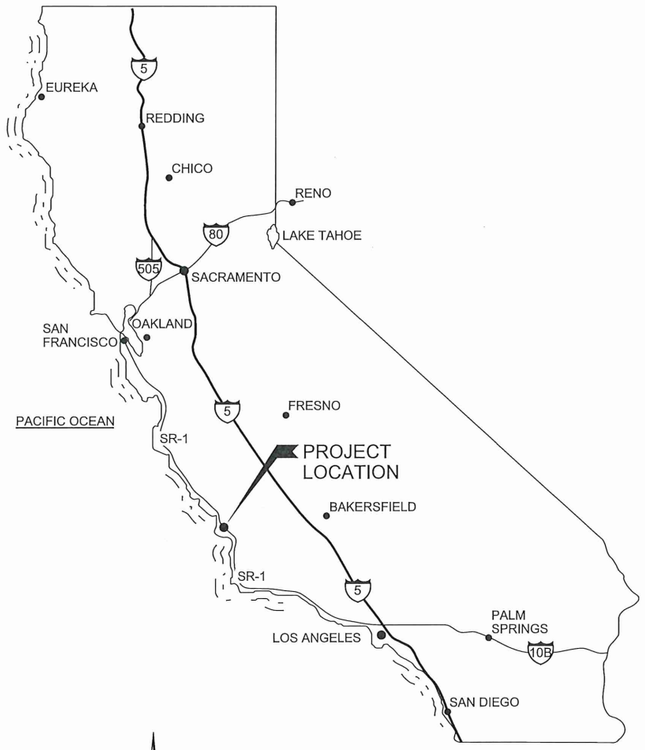

VICINITY MAP
NTS

ISSUED FOR CONSTRUCTION

ROBERT LIVICK, PE / PLS
CITY ENGINEER
CITY OF MORRO BAY

REGISTERED PROFESSIONAL ENGINEER
ROBERT A. LIVICK
No. C61057
CIVIL
STATE OF CALIFORNIA

MORRO BAY
OUR WATER
RELIABLE. CLEAN. FOR LIFE.

CONTRACT START DATE 12/14/2020

WATERWORKS
ENGINEERS

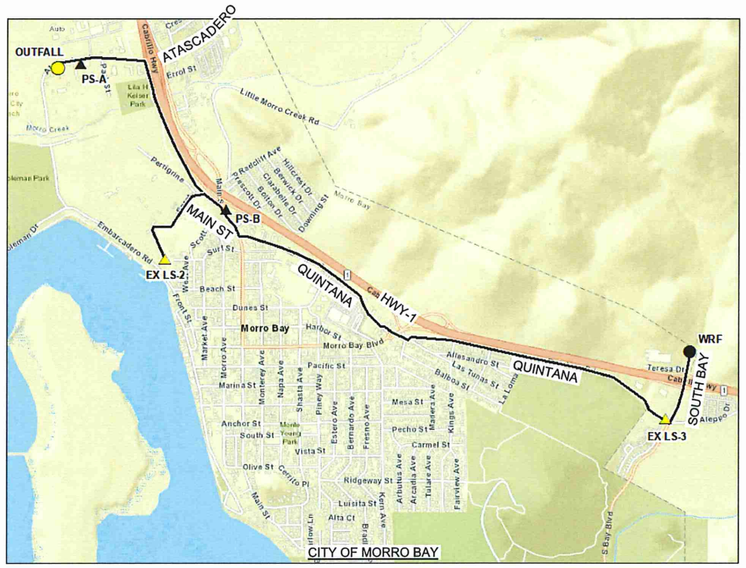

LOCATION MAP
NTS

CONFORMED SET - DEC 2020

INDEX TO DRAWINGS

SHEET NUMBER	DRAWING NUMBER	TITLE
	GENERAL	
1	G-1	COVER SHEET AND LOCATION MAP
2	G-2	INDEX TO DRAWINGS
3	G-3	INDEX TO DRAWINGS CONTINUED
4	G-4	ABBREVIATIONS
5	G-5	GENERAL DESIGNATIONS
6	G-6	CIVIL LEGEND
7	G-7	ARCHITECTURAL LEGEND AND MATERIAL SYMBOLS
8	G-8	STRUCTURAL NOTES
9	G-9	STRUCTURAL NOTES CONTINUED
10	G-10	STRUCTURAL INSPECTIONS
11	G-11	MECHANICAL LEGEND
12	G-12	PROCESS FLOW DIAGRAM AND DESIGN CRITERIA
13	G-13	FORCE MAIN HYDRAULIC GRADE LINE (FPVC)
14	G-14	FORCE MAIN HYDRAULIC GRADE LINE (HDPE)
15	G-15	BRINE HYDRAULIC GRADE LINE
16	G-16	IPR HYDRAULIC GRADE LINE
17	G-17	CIVIL GENERAL NOTES
18	G-18	PERMITTING GENERAL NOTES
	OFFSITE PIPELINES PLAN AND PROFILE	
19	05-C-1	PROJECT OVERVIEW AND KEY MAP 1
20	05-C-2	PROJECT OVERVIEW AND KEY MAP 2
21	05-C-3	PROJECT OVERVIEW AND KEY MAP 3
22	05-C-4	HORIZONTAL CONTROL PLAN
23	05-C-5	ALIGNMENT TABLES
24	05-PP-1	FORCEMAIN PLAN AND PROFILE BEG TO STA 13+00
25	05-PP-2	FORCEMAIN PLAN AND PROFILE STA 13+00 TO STA 17+00
26	05-PP-3	FORCEMAIN PLAN AND PROFILE STA 17+00 TO STA 21+00
27	05-PP-4	FORCEMAIN PLAN AND PROFILE STA 21+00 TO STA 25+00
28	05-PP-5	FORCEMAIN PLAN AND PROFILE STA 25+00 TO STA 29+00
29	05-PP-6	FORCEMAIN PLAN AND PROFILE STA 29+00 TO STA 33+00
30	05-PP-7	FORCEMAIN PLAN AND PROFILE STA 33+00 TO STA 37+00
31	05-PP-8	FORCEMAIN PLAN AND PROFILE STA 37+00 TO STA 41+00
32	05-PP-9	FORCEMAIN PLAN AND PROFILE STA 41+00 TO STA 45+00
33	05-PP-10	FORCEMAIN PLAN AND PROFILE STA 45+00 TO STA 49+00
34	05-PP-11	FORCEMAIN PLAN AND PROFILE STA 49+00 TO STA 53+00
35	05-PP-12	FORCEMAIN PLAN AND PROFILE STA 53+00 TO STA 57+00
36	05-PP-13	FORCEMAIN PLAN AND PROFILE STA 57+00 TO STA 61+00
37	05-PP-14	FORCEMAIN PLAN AND PROFILE STA 61+00 TO STA 65+00
38	05-PP-15	FORCEMAIN PLAN AND PROFILE STA 65+00 TO STA 69+00
39	05-PP-16	FORCEMAIN PLAN AND PROFILE STA 69+00 TO STA 73+00
40	05-PP-17	FORCEMAIN PLAN AND PROFILE STA 73+00 TO STA 77+00
41	05-PP-18	FORCEMAIN PLAN AND PROFILE STA 77+00 TO STA 81+00
42	05-PP-19	FORCEMAIN PLAN AND PROFILE STA 81+00 TO STA 85+00
43	05-PP-20	FORCEMAIN PLAN AND PROFILE STA 85+00 TO STA 89+00
44	05-PP-21	FORCEMAIN PLAN AND PROFILE STA 89+00 TO STA 93+00
45	05-PP-22	FORCEMAIN PLAN AND PROFILE STA 93+00 TO STA 97+00
46	05-PP-23	FORCEMAIN PLAN AND PROFILE STA 97+00 TO STA 101+00
47	05-PP-24	FORCEMAIN PLAN AND PROFILE STA 101+00 TO STA 105+00
48	05-PP-25	FORCEMAIN PLAN AND PROFILE STA 105+00 TO STA 109+00
49	05-PP-26	FORCEMAIN PLAN AND PROFILE STA 109+00 TO STA 113+00
50	05-PP-27	FORCEMAIN PLAN AND PROFILE STA 113+00 TO STA 117+00
51	05-PP-28	FORCEMAIN PLAN AND PROFILE STA 117+00 TO STA 121+00
52	05-PP-29	FORCEMAIN PLAN AND PROFILE STA 121+00 TO STA 125+00
53	05-PP-30	FORCEMAIN PLAN AND PROFILE STA 125+00 TO STA 129+00
54	05-PP-31	FORCEMAIN PLAN AND PROFILE STA 129+00 TO STA 133+00
55	05-PP-32	FORCEMAIN PLAN AND PROFILE STA 133+00 TO STA 137+00
56	05-PP-33	FORCEMAIN PLAN AND PROFILE STA 137+00 TO STA 141+00
57	05-PP-34	FORCEMAIN PLAN AND PROFILE STA 141+00 TO STA 145+00
58	05-PP-35	FORCEMAIN PLAN AND PROFILE STA 145+00 TO STA 149+00
59	05-PP-36	FORCEMAIN PLAN AND PROFILE STA 149+00 TO STA 153+00
60	05-PP-37	FORCEMAIN PLAN AND PROFILE STA 153+00 TO STA 157+00
61	05-PP-38	FORCEMAIN PLAN AND PROFILE STA 157+00 TO STA 161+00
62	05-PP-39	FORCEMAIN PLANAND PROFILE STA 161-00 TO END
63	05-PP-40	LS-2 FORCEMAIN PLAN AND PROFILE BEG TO STA 13+00
64	05-PP-41	LS-2 FORCEMAIN PLAN AND PROFILE STA 13+00 TO STA 17+00
65	05-PP-42	LS-2 FORCEMAIN PLAN AND PROFILE STA 17+00 TO STA 21+00
66	05-PP-43	LS-2 FORCEMAIN PLAN AND PROFILE STA 21+00 TO STA 25+00
67	05-PP-44	LS-2 FORCEMAIN PLAN AND PROFILE STA 25+00 TO END
68	05-PP-45	PS-B SANITARY SEWER
69	05-PP-46	PS-A SANITARY SEWER
70	05-TH-1	PROJECT OVERVIEW AND KEY MAP 1
71	05-TH-2	PROJECT OVERVIEW AND KEY MAP 2
72	05-TH-3	PROJECT OVERVIEW AND KEY MAP 3
73	05-TH-4	STAGE 1
74	05-TH-5	STAGE 2
75	05-TH-6	STAGE 3
76	05-TH-7	STAGE 4
77	05-TH-8	STAGE 5
78	05-TH-9	STAGE 6
79	05-TH-10	STAGE 7
80	05-TH-11	STAGE 7
81	05-TH-12	STAGE 8
82	05-TH-13	STAGE 9, 10, & 11
83	05-TH-14	STAGE 11
84	05-TH-15	STAGE 11, CONT'D
85	05-TH-16	STAGE 12
86	05-TH-17	STAGE 13, 14, & 15
87	05-TH-18	STAGE 15, 16, & 17
88	05-TH-19	STAGE 18
89	05-TH-20	STAGE 18, CONT'D
90	05-TH-21	STAGE 18, CONT'D
91	05-TH-22	STAGE 18, CONT'D
92	05-TH-23	STAGE 19, 20, & 21
93	05-CD-01	TRENCH SECTIONS AND SURFACE RESTORATION STA 10+00 TO 26+30
94	05-CD-02	TRENCH SECTIONS AND SURFACE RESTORATION STA 26+30 TO 32+00
95	05-CD-03	TRENCH SECTIONS AND SURFACE RESTORATION STA 32+00 TO 5C+50
96	05-CD-04	TRENCH SECTIONS AND SURFACE RESTORATION STA 50+52 TO 56+40
97	05-CD-05	TRENCH SECTIONS AND SURFACE RESTORATION STA 56+40 TO 72+20
98	05-CD-06	TRENCH SECTIONS AND SURFACE RESTORATION STA 72+20 TO 121+00
99	05-CD-07	TRENCH SECTIONS AND SURFACE RESTORATION STA 121+00 TO 155+80
100	05-CD-08	TRENCH SECTIONS AND SURFACE RESTORATION STA 155+80 TO END
101	05-CD-09	MISC TRENCH SECTIONS AND SURFACE RESTORATION
102	05-CD-10	PAVEMENT REPLACEMENT AND REHABILITATION DETAILS IN CITY R/W
103	05-CD-11	CAL TRANS STANDARD PLANS
104	05-CD-12	CAL TRANS STANDARD PLANS
105	05-CD-13	CAL TRANS STANDARD PLANS
106	05-CD-14	CAL TRANS STANDARD PLANS
107	05-CD-15	CASING AND GEOTECHNICAL INSTRUMENTATION DETAILS
	MISC OFFSITE PIPELINES PLAN AND PROFILE	
108	06-C-1	PAVEMENT REPLACEMENT AND REHABILATION PLAN STA 10+00 TO STA 42+50
109	06-C-2	PAVEMENT REPLACEMENT AND REHABILATION PLAN STA 42+50 TO STA 70+00
110	06-C-3	PAVEMENT REPLACEMENT AND REHABILATION PLAN STA 70+00 TO STA 97+50
111	06-C-4	PAVEMENT REPLACEMENT AND REHABILATION PLAN STA 97+50 TO STA 125+00
112	06-C-5	PAVEMENT REPLACEMENT AND REHABILATION PLAN STA 125+50 TO END
113	06-CD-01	AIR RELIEF STRUCTURE DEMOLITION PHOTO
114	06-CD-02	AIR RELIEF STRUCTURE REHABILITATION PLANS
115	06-CD-03	ROUNDABOUT ARV VAULT AND ODOR CONTROL PLAN
116	06-CD-04	QUINTANA HIGH POINT CARV VAULT AND ORDOR CONTROL PLAN
117	06-CD-05	IPR ARV & CARV DETAILS
118	06-CD-06	MAIN STREET RETAINING WALL DETAIL
119	06-CD-07	BRINE AND IPR QUINTANA CARV SITE
120	06-CD-08	QUINTANA & SOUTH BAY BLVD CONNECTION DETAILS
	UTILITY PIPE BRIDGE	
121	07-C-1	NORTHERN BRIDGE ABUTMENT GRADING PLAN
122	07-C-2	SOTHERN BRIDGE ABUTMENT GRADING PLAN
123	07-SM-1	UTILITY BRIDGE PLAN AND ELEVATION
124	07-SM-2	UTILITY BRIDGE NORTH ABUTMENT PARTIAL PLAN
125	07-SM-3	UTILITY BRIDGE SOUTH ABUTMENT PARTIAL PLAN
126	07-SM-4	UTILITY BRIDGE NORTH ABUTMENT SECTIONS AND DETAIL
127	07-SM-5	UTILITY BRIDGE SOUTH ABUTMENT SECTIONS
	PUMP STATION A (PS-A)	
128	10-D-1	PS-A DEMOLITION PLAN
129	10-C-1	PS-A OVERALL PLAN
130	10-C-2	PS-A GRADING PLAN
131	10-Y-1	PS-A YARD PIPING PLAN
132	10-Y-2	EMERGENCY STORAGE PIPING
133	10-Y-3	EMERGENCY STORAGE PIPING DETAILS
134	10-Y-4	PS-A JUNCTION MANHOLE DETAILS
135	10-Y-5	PS-A YARD PIPING PLAN
136	10-R-1	ELECTRICAL BUILDING RENDERING
137	10-R-2	PUMP STATION RENDERINGS
138	10-AS-1	ELECTRICAL BUILDING ELEVATIONS
139	10-AS-2	ELECTRICAL BUILDING PLAN
140	10-AS-3	ELECTRICAL BUILDING ROOF FRAMING PLAN
141	10-AS-4	ELECTRICAL BUILDING SECTION
142	10-AS-5	ELECTRICAL BUILDING SECTIONS
143	10-BS-1	ELECTRICAL BUILDING PLAN
144	10-BS-2	ELECTRICAL BUIDING SECTION
145	10-S-1	PS-A PLANS
146	10-S-2	PS-A SECTION AND DETAIL
147	10-S-3	PS-A GENERATOR PLAN
148	10-S-4	PS-A GENERATOR SECTIONS
149	10-S-5	STRUCTURAL SECTIONS AND DETAILS
150	10-M-1	PS-A PLANS
151	10-M-2	PS-A SECTIONS
152	10-M-3	PS-A SECTIONS
	PUMP STATION B (PS-B)	
153	20-D-1	PS-B DEMOLITION PLAN
154	20-C-1	PS-B OVERALL PLAN
155	20-C-2	PS-B GRADING PLAN
156	20-Y-1	PS-B YARDING PLAN
157	20-Y-2	PS-B JUNCTION MANHOLE DETAILS
158	20-Y-3	PS-B JUNCTION MANHOLE DETAILS
159	20-Y-4	PS-B JUNCTION MANHOLE DETAILS
160	20-R-1	ELECTRICAL BUILDING RENDERING
161	20-R-2	PUMP STATION RENDERINGS
162	20-AS-1	ELECTRICAL BUILDING ELEVATIONS
163	20-AS-2	ELECTRICAL BUILDING PLAN
164	20-AS-3	ELECTRICAL BUILDING ROOF FRAMING PLAN
165	20-AS-4	ELECTRICAL BUILDING SECTION
166	20-AS-5	ELECTRICAL BUILDING SECTION
167	20-AS-6	ELECTRICAL BUILDING ARCHITECTURAL DETAILS
168	20-AS-7	ELECTRICAL BUILDING ARCHITECTURAL DETAILS
169	20-S-1	PS-B LOWER PLAN
170	20-S-2	PS-B TOP PLAN
171	20-S-3	PS-B SECTION
172	20-S-4	PS-B SECTION
173	20-S-5	PS-B GENERATOR PLAN
174	20-S-6	PS-B SECTIONS
175	20-M-1	PS-B LOWER PLAN
176	20-M-2	PS-B TOP PLAN
177	20-M-3	PS-B PARTIAL PLAN AND SECTIONS
178	20-M-4	PS-B SECTION
179	20-M-5	PS-B SECTIONS

DESIGNED K ALACON
DRAWN J MARTIN
CHECKED K ALACON
APPROVED M FISHER

WATERWORKS ENGINEERS
2290 Douglas Blvd., Suite 105 • Roseville, CA 95661 • 916-780-2888

CITY OF MORRO BAY
WATER RECLAMATION FACILITY
LIFT STATIONS AND OFFSITE PIPELINES

GENERAL
INDEX TO DRAWINGS

REGISTERED PROFESSIONAL ENGINEER
No. 067194
CIVIL
STATE OF CALIFORNIA
05-29-2020

DATE MAY 2020
PROJECT NUMBER 17-082
DRAWING NUMBER G-2
SHEET NUMBER 2

CONFORMED SET - DEC 2020

INDEX TO DRAWINGS (CONTINUED)

SHEET NUMBER	DRAWING NUMBER	TITLE
	HVAC	
180	M-1	PUMP STATION A AND B HVAC SCHEDULES AND LEGEND
181	M-2	PUMP STATION A AND B HVAC PLANS AND DETAILS
	ELECTRICAL AND INSTRUMENTATION	
182	00-E-01	SYMBOLS AND ABBREVIATIONS
183	00-E-02	DETAILS 1
184	00-E-03	DETAILS 2
185	00-E-04	DETAILS 3
186	00-E-05	SUMP TERMINATION PANELS
187	00-E-06	CONTROL PANEL ELEVATION AND BACKPAN LAYOUT
188	00-E-07	CONTROL PANEL POWER DISTRIBUTION DIAGRAM
189	00-E-08	CONTROL PANEL POWER DISTRIBUTION DIAGRAM
190	05-E-01	PIPELINE BRIDGE SUMP ELEVATION MONITORING ELECTRICAL PLAN
191	05-E-02	PIPELINE BRIDGE SUMP LEVEL MONITORING CONTROL PANEL
192	10-E-01	PS-A METER/MAIN ONE-LINE AND ELEVATION
193	10-E-02	VFD ELEMENTARY DIAGRAM
194	10-E-03	PS-A POWER AND CONTROL PLAN
195	10-E-04	PS-A LIGHTING AND RECEPTACLE PLAN
196	10-E-05	PS-A ELECTRICAL SITE PLAN
197	10-E-06	PS-A CONDUIT SCHEDULE 1
198	10-E-07	PS-A CONDUIT SCHEDULE 2
199	20-E-01	PS-B METER/MAIN ONE-LINE AND ELEVATION
200	20-E-02	PS-B PANELBOARD SCHEDULE AND LOAC CALCULATIONS
201	20-E-03	VFD ELEMENTARY DIAGRAM
202	20-E-04	PS-B POWER AND CONTROL PLAN
203	20-E-05	PS-B ELECTRICAL BUILDING POWER AND CONTROL PLAN
204	20-E-06	PS-B ELECTRICL BUILDING LIGHTING AND RECEPTACLE PLAN
205	20-E-07	PS-B ELECTRICAL SITE PLAN
206	20-E-08	PS-B CONDUIT SCHEDULE 1
207	20-E-09	PS-B CONDUIT SCHEDULE 2
208	00-I-01	SYMBOLS AND ABBREVIATIONS
209	00-I-02	NETWORK TOPOLOGY
210	05-I-01	PIPELINE BRIDGE SUMP LEVEL MONITORING P&ID
211	10-I-01	PS-A P&ID
212	10-I-02	PS-A MISCELLANEOUS P&ID
213	20-I-01	PS-B P&ID
214	20-I-02	PS-B MISCELLANEOUS P&ID
	STANDARD DETAILS	
215	SD-1	STANDARD DETAILS
216	SD-2	STANDARD DETAILS
217	SD-3	STANDARD DETAILS
218	SD-4	STANDARD DETAILS
219	SD-5	STANDARD DETAILS
220	SD-6	STANDARD DETAILS
221	SD-7	STANDARD DETAILS
222	SD-8	STANDARD DETAILS
223	SD-9	STANDARD DETAILS
224	SD-10	STANDARD DETAILS
225	SD-11	STANDARD DETAILS
226	SD-12	STANDARD DETAILS
227	SD-13	STANDARD DETAILS
228	SD-14	STANDARD DETAILS
229	SD-15	STANDARD DETAILS
230	SD-16	STANDARD DETAILS
231	SD-17	STANDARD DETAILS

DESIGNED K ALACON
DRAWN J MARTIN
CHECKED K ALACON
APPROVED M FISHER

WATERWORKS ENGINEERS
2290 Douglas Blvd., Suite 105 • Roseville, CA 95661 • 916-780-2888

CITY OF MORRO BAY
WATER RECLAMATION FACILITY
LIFT STATIONS AND OFFSITE PIPELINES

GENERAL
INDEX TO DRAWINGS CONTINUED

REGISTERED PROFESSIONAL ENGINEER
No. 67194
CIVIL
STATE OF CALIFORNIA
05-29-2020

DATE MAY 2020
PROJECT NUMBER 17-082
DRAWING NUMBER G-3
SHEET NUMBER 3

FILENAME: 1782D-G002.dgn PLOT DATE: 5/23/2020 7:48:12 AM

CONFORMED SET - DEC 2020

ABBREVIATIONS

AIR		
AT		
ANCHOR BOLT, AGGREGATE BASE		
ASPHALTIC CONCRETE, ASBESTOS CEMENT		
AMERICAN CONCRETE INSTITUTE		
AIR CONDITIONING UNIT		
ADDITIONAL		
ADHESIVE ANCHOR BOLT		
ADJACENT ADJUSTABLE		
ANALYZER ELEMENT		
ABOVE FINISH FLOOR		
ABOVE FINISH GRADE		
AIR: HIGH PRESSURE		
COMPRESSED AIR		
AMERICAN INSTITUTE OF STEEL		
CONSTRUCTION		
ANALYZER INDICATOR/TRANSMITTER		
ALUMINUM		
AIR LOW PRESSURE		
ALTERNATE		
AMERICAN NATIONAL STANDARDS INSTITUTE		
APPROXIMATE		
APPROVED		
AMERICAN PUBLIC WORKS ASSOCIATION		
AERATION		
ARCHITECTURAL		
AIR RELEASE VALVE		
AMERICAN SOCIETY FOR TESTING AND		
MATERIALS		
AUTOMATIC		
AUXILIARY		
AIR/VACUUM ASSEMBLY		
AVENUE		
AMERICAN WIRE GAGE		
AMERICAN WATER WORKS ASSOCIATION		
ANOXIC		
BORING		
BALL VALVE		
BEGIN CURVE, BOTTOM OF CURB		
BLOW DOWN		
BLIND FLANGE, BOTTOM FACE		
BUTTERFLY VALVE DAMPER		
BUTTERFLY VALVE		
BUILDING		
BLACK		
BUREAU OF LAND MANAGEMENT		
BENCH MARK, BEAM		
BLOW OFF		
BACK OF CURB		
BACK OF GUTTER		
BOTTOM OF OPENING		
BOTTOM		
BEARING		
BEGINNING OF VERTICAL CURVE		
BYPASS		
CENTER TO CENTER		
CHANNEL (BEAM)		
COMBINATION AIR RELEASE VALVE		
CATHODIC PROTECTION		
CABLE TELEVISION		
CATCH BASIN		
CONCRETE CYLINDER PIPE		
CENTRAL CONTROL SYSTEM		
CONDENSATE		
CUBIC FEET		
CUBIC FEET PER MINUTE		
CUBIC FEET PER SECOND		
CHEMICAL		
CAST IRON		
CAST IRON GROOVED COUPLING		
CAST IRON MECHANICAL JOINT		
CAST IRON PIPE		
CAST IRON RESTRAINED JOINT		
CAST IRON SOIL PIPE		
CONSTRUCTION JOINT,		
CONTRACTION JOINT		
CENTERLINE		
CHLORINE		
CEMENT-LINED DUCTILE IRON PIPE		
CEILING		
CLEAR, CLEARANCE		
CONTROLLED LOW STRENGTH MATERIAL		
CEMENT MORTAR LINED AND COATED		
STEEL PIPE		
CEMENT MORTAR LINED STEEL PIPE		
CORRUGATED METAL PIPE		

CMU	CONCRETE MASONRY UNIT	
CO	CLEANOUT	
COL	COLUMN	
COM	COMMUNICATION	
COMB	COMBINED	
CONC	CONCRETE	
CONN	CONNECTION	
CONT	CONTINUOUS, CONTINUATION	
COORD	COORDINATE	
CPLG	COUPLING	
CTRD, CTD	CENTERED	
CTR	CENTER	
CU	COPPER	
CU FT	CUBIC FOOT	
CU IN	CUBIC INCH	
CU YD	CUBIC YARD	
CULV	CULVERT	
CV	CHECK VALVE	
°C	CELSIUS	
d	PENNY	
DBA	DEFORMED BAR ANCHOR	
DBL	DOUBLE	
DEC	DECANT	
DET	DETAIL	
DF	DOUGLAS FIR/LARCH	
DI	DROP INLET, DUCTILE IRON	
DIA	DIAMETER	
DIAG	DIAGONAL	
DIL	DILUTE	
DIM	DIMENSION	
DIMJ	DUCTILE IRON MECHANICAL JOINT	
DIP	DUCTILE IRON PIPE	
DIPPL	DUCTILE IRON PIPE, POLYETHYLENE LINED	
DIR	DIRECTION	
DIST	DISTANCE	
DN	DOWN	
DR	DRAIN	
do	DITTO	
DPT	DIFFERENTIAL PRESSURE TRANSMITTER	
DSMT	DISMANTLING JOINT	
DWG	DRAWING	
E	EAST, ELECTRIC, ELECTRICAL	
EA	EACH	
EC	END CURVE	
ECC	ECCENTRIC	
EE	ELECTRICAL	
EF	EACH FACE, EXHAUST FAN	
EFL	EFFLUENT	
EG	EXISTING GRADE	
EJ	EXPANSION JOINT	
EL	ELEVATION	
ELB, ELL	ELBOW	
ELC	ELECTRICAL LOAD CENTER	
ELEC	ELECTRIC, ELECTRICAL	
EM	EMISSION MEASUREMENT	
EMR	EMERGENCY	
ENGR	ENGINEER	
EO	EMERGENCY OVERFLOW	
EP	EDGE OF PAVEMENT	
EQ	EQUALIZATION	
EQL SP	EQUALLY SPACED	
EQPT	EQUIPMENT	
ESC	EROSION SEDIMENT CONTROL	
ESA	ENVIRONMENTALLY SENSITIVE AREA	
EVC	END OF VERTICAL CURVE	
EW	EACH WAY	
EWEF	EACH WAY, EACH FACE	
EX	EXISTING	
EXC	EXCAVATE	
EXP	EXPOSED, EXPANSION	
EXP JT	EXPANSION JOINT	
EXST	EXISTING	
FB	FLAT BAR	
FBE	FUSION BONDE EPOXY	
FC	FLEXIBLE COUPLING	
FCA	FLANGED COUPLING ADAPTER	
FCO	FLOOR CLEAN OUT	
FD	FLOOR DRAIN	
FDA	FLOOR DRAIN W/INTEGRAL TRAP	
FDN	FOUNDATION	
FES	FLARED END SECTION	
FEXT	FIRE EXTINGUISHER	
FF	FINISH FLOOR	
FG	FINISH GRADE	
FHY	FIRE HYDRANT	

FI	FLOW INDICATOR	
FIG	FIGURE	
FIL	FILTRATE	
FL	FLOOR, FLOW LINE	
FLG	FLANGE	
FLH	FLAT HEAD	
FLL	FLOW LINE	
FLTR	FILTER	
FM	FLOW METER	
FNSH	FINISH	
FO	FUEL OIL	
FOC	FACE OF CONCRETE	
FOE	FLANGED ONE END	
FRP	FIBERGLASS REINFORCED PLASTIC	
FS	FINISHED SURFACE, FLOW SWITCH	
FT	FOOT OR FEET	
FTG	FOOTING	
FWD	FORWARD	
°F	DEGREE FAHRENHEIT	
G	GAS	
GA	GAGE	
GAC	GRANULAR ACTIVATED CARBON	
GAL	GALLON	
GALV	GALVANIZED	
GB	GRADE BREAK	
GC	GROOVED COUPLING	
GCO	GRADE CLEAN OUT	
GCF	GROOVED COUPLING FITTING	
GD	GENERAL DRAINAGE	
GE	GROOVED END	
GL	GLASS	
GPD	GALLONS PER DAY	
GPH	GALLONS PER HOUR	
GPM	GALLONS PER MINUTE	
GRTG	GRATING	
GSP	GALVANIZED STEEL PIPE	
GT	GAS TURBINE	
GV	GATE VALVE	
GVL	GRAVEL	
GW	GROUND WATER	
HD	HUB DRAIN	
HDPE	HIGH DENSITY POLYETHLENE PIPE	
HDR	HEADER	
HDW	HARDWARE	
HGL	HYDRAULIC GRADE LINE	
HGT	HEIGHT	
HM	HOLLOW METAL	
HORIZ	HORIZONTAL	
HP	HORSEPOWER	
HPT	HIGH POINT	
HR	HANDRAIL	
HSS	HOLLOW STRUCTURAL STEEL	
HV	HOSE VALVE	
HWL	HIGH WATER LEVEL	
HWY	HIGHWAY	
HYD	HYDRANT	
IA	INSTRUMENT AIR	
I&C	INSTRUMENTATION & CONTROL	
ID	INSIDE DIAMETER	
IF	INSIDE FACE	
IN	INCH	
INSTM	INSTRUMENTATION	
INSUL	INSULATE, INSULATION	
INV	INVERT	
IP	IRON PIPE	
IR	IRON ROD	
IRR	IRRIGATION	
JT	JOINT	
KIP	THOUSAND POUNDS	
KW	KILOWATT	
L	LEFT, ANGLE, LENGTH	
LAB	LABORATORY	
LAT'L	LATERAL	
LB	POUNDS	
LB/CU FT	POUNDS PER CUBIC FOOT	
LCC	LIGHTWEIGHT CELLULAR CONCRETE	
LE	LEVEL ELEMENT	
LF	LINEAR FEET	
LG	LONG	
LIT	LEVEL INDICATOR/TRANSMITTER	
LONG	LONGITUDINAL	
LP	LOW POINT	

LR	LONG RADIUS	
LS	LIFT STATION	
	LOW PRESSURE STREAM	
LT	LEVEL TRANSMITTER	
LSH	LEVEL SWITCH HIGH	
LSL	LEVEL SWITCH LOW	
LWL	LOW WATER LEVEL	
MAX	MAXIMUM	
MCC	MOTOR CONTROL CENTER	
MCJ	MASONRY CONTROL JOINT	
MECH	MECHANICAL	
MFR	MANUFACTURER	
MGD	MILLION GALLONS PER DAY	
MH	MANHOLE	
MIN	MINIMUM, MINUTE	
MISC	MISCELLANEOUS	
MJ	MECHANICAL JOINT	
MPH	MILES PER HOUR	
MSNRY	MASONRY	
MSP	MILL STEEL PIPE, MANUAL OF STANDARD	
	PRACTICE	
MTL	MATERIAL	
MW	MAKE UP WATER	
MWS	MAXIMUM WATER SURFACE	
N	NORTH	
NC	NORMALLY CLOSED	
NE	NORTHEAST	
NEMA	NATIONAL ELECTRICAL	
	MANUFACTURERS ASSOCIATION	
NFPA	NATIONAL FIRE PROTECTION ASSOCIATION	
NIC	NOT IN CONTRACT	
NO	NUMBER, NUMBERING	
NPT	NATIONAL PIPE THREAD	
NTS	NOT TO SCALE	
NW	NORTHWEST	
OC	ON CENTER	
OD	OUTSIDE DIAMETER, OVERFLOW DRAIN	
OF	OUTSIDE FACE, OVERFLOW	
OFR	OVERFLOW RETURN	
OG	ORIGINAL GROUND	
OHE	OVERHEAD ELECTRIC	
OMRF	ORDINARY MOMENT RESISTING FRAME	
O TO O	OUT TO OUT	
OPNG	OPENING	
OPP	OPPOSITE	
OSHA	OCCUPATIONAL SAFETY & HEALTH ADMIN.	
OZ	OUNCE	
PA	PROCESS AIR	
PC	POINT OF CURVE	
PE	PLAIN END, POLYETHYLENE, PERMANENT	
	EASEMENT	
PENT	PENETRATION	
PI	POINT OF INTERSECTION	
PJF	PREMOLDED JOINT FILLER	
PL	PLATE, PROPERTY LINE	
PLC	PROGRAMMABLE LOGIC CONTROLLER	
PLYWD	PLYWOOD	
PNL	PANEL	
POB	POINT OF BEGINNING	
POC	POINT OF CONNECTION	
POE	POINT OF ENDING, PLAIN ONE END	
PP, P&P	PLAN AND PROFILE, POWER POLE	
PPM	PARTS PER MILLION	
PRC	POINT OF REVERSE CURVE	
PRCST	PRECAST	
PREFAB	PREFABRICATED	
PRESS	PRESSURE	
PRC	POINT OF REVERSE CURVE	
PRI	PRIMARY	
PROP	PROPERTY	
PRV	PRESSURE RELEASE VALVE	
PS	PUMP STATION	
PSF	POUNDS PER SQUARE FOOT	
PSI	POUNDS PER SQUARE INCH	
PSIG	POUNDS PER SQUARE INCH, GAUGE	
PT	POINT OF TANGENCY	
P.U.E.	PUBLIC UTILITY EASEMENT	
PV	PLUG VALVE	
PVC	POLYVINYL CHLORIDE PLASTIC, POINT OF	
	VERTICAL CURVE	
PVCGS	POLYVINYL CHLORIDE PLASTIC-GRAVITY	
	SEWER TYPE	
PVCW	POLYVINYL CHLORIDE PLASTIC-	
	WATER DISTRIBUTION SERVICE TYPE	

PVMT	PAVEMENT	
PVI	POINT OF VERTICAL INTERSECTION	
PVT	POINT OF VERTICAL TANGENCY, PRIVATE	
PW	POTABLE WATER PROCESS WATER	
R, RAD	RADIUS	
RC	REINFORCED CONCRETE	
RCP	REINFORCED CONCRETE PIPE	
RD	ROAD, ROOF DRAIN	
RDCG	REDUCING	
RDCR	REDUCER	
REF	REFER, REFERENCE	
REINF	REINFORCED, REINFORCING, REINFORCE	
REQD	REQUIRED	
RJ	RESTRAINED JOINT	
RLS	RUBBER LINED STEEL	
RM	ROOM	
RFCA	RESTRAINED FLANGED COUPLING ADAPTER	
RMJ	RESTRAINED MECHANICAL JOINT	
RO	ROUGH OPENING, REVERSE OSMOSIS	
RP	RADIUS POINT	
R/R	REMOVE AND REPLACE	
RST	REINFORCING STEEL	
RT	RIGHT	
RTN	RETURN WATER	
RV	ROOF VENT	
RW	RAW WATER	
R/W	RIGHT-OF-WAY	
S	I-BEAM, SOUTH, SLOPE	
S =	SLOPE EQUALS	
SA	SERVICE AIR	
SAT	SUSPENDED ACOUSTIC TILE	
SC	SCUM	
SCFH	STANDARD CUBIC FEET PER HOUR	
SCFM	STANDARD CUBIC FEET PER MINUTE	
SCH	SCHEDULE	
SD	STORM DRAIN	
SE	SOUTHEAST	
SEC	SECONDARY	
SECT	SECTION	
SH	SHEET	
SIM	SIMILAR	
SLP	SLOPE	
SMP	SAMPLE	
SOLN	SOLUTION	
SOW	SLIP ON WELD	
SP	SPACE OR SPACES	
SPD	SUMP PUMP DRAIN	
SPEC	SPECIFICATIONS	
SPLY	SUPPLY	
SQ	SQUARE	
SQ FT	SQUARE FOOT	
SQ IN	SQUARE INCH	
SS	SANITARY SEWER	
SSCO	SANITARY SEWER CLEANOUT	
SSH	SAFETY SHOWER	
SSMH	SANITARY SEWER MANHOLE	
ST	SAMPLE TAP	
SST	STAINLESS STEEL	
STA	STATION	
STD	STANDARD	
STIF	STIFFENER	
STL	STEEL, STEEL PIPE	
STLS	STEEL PIPE (SPECIAL)	
STR	STRAIGHT	
STRL	STRUCTURAL	
STRUCT	STRUCTURE	
SUBFL	SUBFLOOR	
SUSP	SUSPEND	
SW	SOUTHWEST, SERVICE WATER	
SYMM	SYMMETRICAL	
T	TANGENT, TELEPHONE LINE, TOP	
T&B	TOP AND BOTTOM	
T&G	TONGUE AND GROOVE	
t, T	THICKNESS	
TBG	TUBING	
TCE	TEMPORARY CONST EASEMENT	
TDH	TOTAL DYNAMIC HEAD	
TECH	TECHNICAL	
TEL	TELEPHONE	
TEMP	TEMPORARY, TEMPERATURE	
TF	TOP FACE	
THD	THREAD	
THK	THICK	
TNK	TANK	
TOC	TOP OF CURB, TOP OF CONCRETE	

TOW	TOP OF WALL	
TOF	TOP OF FOOTING	
TP	TURNING POINT, TEST PIT	
TRANS	TRANSITION	
TRANSV	TRANSVERSE	
TS	TUBE STEEL	
TST	TOP OF STEEL	
TT	THRUST TIE	
TURB	TURBIDITY	
TW	TREATED GROUND WATER	
TWS	TRACER WIRE STATION	
TYP	TYPICAL	
UBC	UNIFORM BUILDING CODE	
UD	UNDERDRAIN	
UG	UNDERGROUND	
UH	UNIT HEATER	
UNK	UNKNOWN	
UNO	UNLESS NOTED OTHERWISE	
V	VENT, VOLT, VALVE	
VAC	VACUUM	
VAR	VENT ACID RESISTANT	
VC	VERTICAL CURVE	
VERT	VERTICAL	
VFD	VARIABLE FREQUENCY DRIVE	
VPI	VERTICAL POINT OF INTERSECTION	
VPS	VENEER PLASTER SYSTEM	
VTR	VENT THRU ROOF	
W/	WITH	
W	WIDE FLANGE (BEAM), WEST, WATER	
WC	WATER CLOSET	
WD	WOOD	
WH	WATER HEATER	
WM	WATER METER	
WR	WATER RESISTANT	
WS	WATER SURFACE, WATER STOP	
W SH ST	WEATHERING SHEET STEEL	
WSE	WATER SURFACE ELEVATION	
WSP	WELDED STEEL PIPE	
WT	WATER TIGHT	
WTR	WATER	
WW	WASH WATER, WASTEWATER	
WWF	WELDED WIRE FABRIC	
XMFR	TRANSFORMER	
YD	YARD	

NOTES:

1. FOR ELECTRICAL AND INSTRUMENTATION ABBREVIATIONS, SEE ELECTRICAL AND INSTRUMENTATION DRAWINGS.
2. CONTACT THE ENGINEER FOR ABBREVIATIONS NOT LISTED.
3. THIS IS A STANDARD LEGEND SHEET, THEREFORE, SOME SYMBOLS OR ABBREVIATIONS MAY APPEAR ON THIS SHEET AND MAY NOT BE UTILIZED ON THIS PROJECT.

REGISTERED PROFESSIONAL ENGINEER — No. 67194 — CIVIL — STATE OF CALIFORNIA

05-29-2020

DESIGNED K ALACON
DRAWN J MARTIN
CHECKED K ALACON
APPROVED M FISHER

WATERWORKS ENGINEERS
2280 Douglas Blvd., Suite 105 • Roseville, CA. 95661 • 916-780-2888

CITY OF MORRO BAY
WATER RECLAMATION FACILITY
LIFT STATIONS AND OFFSITE PIPELINES

GENERAL
ABBREVIATIONS

DATE: MAY 2020
PROJECT NUMBER: 17-082
DRAWING NUMBER: G-4
SHEET NUMBER: 4

FILENAME: 1782D-G003.dgn PLOT DATE: 5/23/2020 8:08:30 AM

CONFORMED SET - DEC 2020

DISCIPLINE

LETTER	DISCIPLINE
A	ARCHITECTURAL
C	SITE CIVIL
CD	CIVIL DETAILS
D	DEMOLITION
E	ELECTRICAL
G	GENERAL
H	HEATING, VENTILATION AND COOLING
I	INSTRUMENTATION
M	MECHANICAL
P	PLUMBING
PP	PIPELINE PLAN AND PROFILE
S	STRUCTURAL
Y	YARD PIPING

DRAWING NUMBER

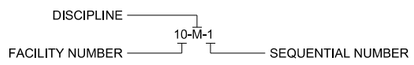

SECTION

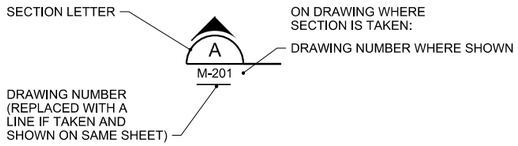

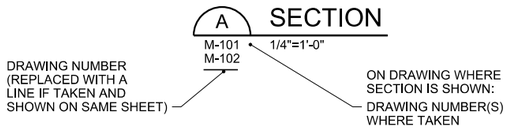

DETAIL

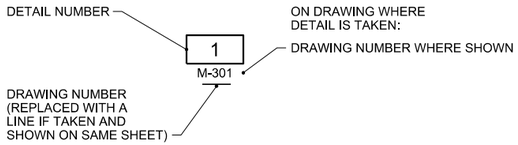

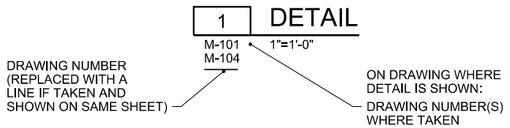

DEMOLITION PHOTO

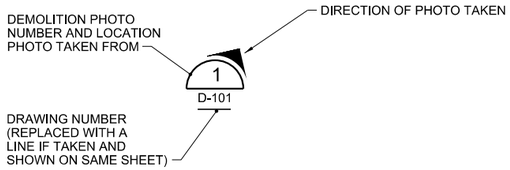

ELEVATION

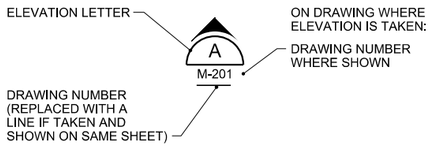

STANDARD DETAIL



NOTES:

1. STANDARD DETAIL CALLOUTS ARE SHOWN TO INDICATE DETAIL REQUIRED AT SPECIFIC LOCATIONS. DETAILS ARE NOT CALLED OUT AT ALL LOCATIONS. WHERE A STANDARD DETAIL CALLOUT IS NOT SHOWN, THE CONTRACTOR SHALL USE THE STANDARD DETAIL MOST APPLICABLE AND CONSISTENT WITH OTHER WORK UNDER THIS CONTRACT.

STANDARD VALVE AND OPERATOR

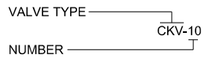

NOTES:

1. SEE SPECIFICATION SECTION 15200.

UNIQUE VALVE AND OPERATOR

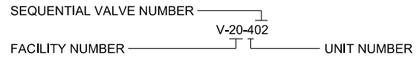

NOTES:

1. SEE SPECIFICATION SECTION 15200 FOR VALVE SCHEDULE.

EQUIPMENT DESIGNATION

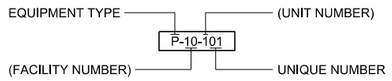

LINE TYPE APPEARANCE

———	BLACK	NEW 'ON' DISCIPLINE
———	LIGHT OR MEDIUM GRAY OR SCREENED	EXISTING 'ON' OR 'OFF' DISCIPLINE
———	DARK GRAY	NEW 'OFF' DISCIPLINE

GENERAL SYMBOLOGY

	STRUCTURE OR EQUIPMENT TO BE SALVAGED OR DEMOLISHED
	PIPE TO BE SALVAGED OR DEMOLISHED
*	EQUIPMENT COMPONENTS OR PANELS SHOWN WITH A SINGLE ASTERISK (*) ARE TO BE PROVIDED AS PART OF A PACKAGE SYSTEM.



05-29-2020

DESIGNED K ALACON
DRAWN J MARTIN
CHECKED K ALACON
APPROVED M FISHER

WATERWORKS ENGINEERS
2290 Douglas Blvd., Suite 105 • Roseville, CA 95661 • 916-780-2888

CITY OF MORRO BAY
WATER RECLAMATION FACILITY
LIFT STATIONS AND OFFSITE PIPELINES

GENERAL
GENERAL DESIGNATIONS

DATE MAY 2020
PROJECT NUMBER 17-082
DRAWING NUMBER G-5
SHEET NUMBER 5

CONFORMED SET - DEC 2020

CIVIL LEGEND

EL 158.5 — EL 158.5	SPOT ELEVATION
155	CONTOUR LINE
4:1	CUT SLOPE (HORIZ:VERT)
4:1	EMBANKMENT - FILL SLOPE (HORIZ:VERT)
	DRAINAGEWAY OR DITCH
	DIRECTION OF FLOW
	CENTER LINE, BUILDING, ROAD
	PROPERTY LINE
	RIGHT OF WAY, EASEMENT OR SETBACK
	STAGING OR WORK AREA LIMITS
N 1000.00 E 1000.00	STRUCTURE, BUILDING OR FACILITY LOCATION POINT COORDINATES
OR	STRUCTURE, BUILDING OR FACILITY
	RETAINING WALL
	CONCRETE CURB
	ARCHITECTURAL FENCE
	GUARD RAIL/BARRICADE
OX	CHAIN LINK FENCE WITH 3 STRAND BARBED WIRE TOPPING
	ARCHITECTURAL FENCE
	CHAIN LINK FENCE
X X	BARBED WIRE
X X	SINGLE SWING GATE
	DOUBLE SWING GATE
	SLIDING GATE
	CULVERT
	FIRE HYDRANT
	WALL
	BRUSH/TREE LINE
	TREE
OR OR	DEMOLITION
	ABANDON IN PLACE
	AUTOMATIC AIR RELEASE VALVE
	MANUAL AIR RELEASE VALVE
	WATER SURFACE
GB	GRADE BREAK
X	TREE MARKED FOR REMOVAL

CIVIL LEGEND (CONTINUED)

	BEDROCK
	ROCKS OR RIPRAP
	SAND
	AGGREGATE BASE
	NATURAL SOIL
	COMPACTED SOIL
	CONCRETE
	GROUT
	CONTROLLED LOW STRENGTH MATERIAL (CLSM)
	PAVEMENT
	GRATING

MAPPING LEGEND

	AIR RELEASE VALVE
	ASPHALT PAVEMENT
	BOLLARD
CT	CABLE TELEVISION
	CATCH BASIN
EM	ELECTRIC METER
EP	ELECTRIC PULLBOX
ER	ELECTRIC RISER
ES	ELECTRIC SWITCHBOX
ET	ELECTRIC TRANSFORMER
	FIRE HYDRANT
	GAS VALVE
	GRAY PVC CONDUIT PIPES
	GUARD POST
	GUY WIRE
IB	IRRIGATION BOX
IV	IRRIGATION VALVE
	LIGHT POLE WITH NO ARM
	LIGHT POLE WITH ARM ATTACHED TO UTILITY POLE
	REBAR
R/W	RIGHT-OF-WAY
	SEWER CLEANOUT
S	SEWER MANHOLE
	SOLAR PANEL
	STORM DRAIN MANHOLE
	STREET SIGN
	SURVEY CONTROL POINT OR POINT OF INTERSECTION
	TELEPHONE BOX
	TRAFFIC CONTROL BOX
	TRAFFIC SIGNAL BOX
	TRAFFIC SIGNAL WITH ARM
	TRAFFIC SIGNAL WITH NO ARM
	TRAFFIC WALK SWITCH
	UTILITY POLE
	WATER VALVE
W	WATER MANHOLE
WM	WATER METER
	WELL

SITE UTILITIES IDENTIFICATION

	ABANDONED UTILITY
E	BURIED POWER
OE	OVERHEAD POWER
FO	FIBER OPTIC
HPG	HIGH PRESSURE GAS
G	NATURAL GAS SERVICE
PET	PETROLEUM
SD	STORM DRAIN
SS SS	SANITARY SEWER
TO	TELEPHONE - OVERHEAD
T	TELEPHONE - BURIED
W	WATER
IPR	INDIRECT POTABLE REUSE
BR	BRINE
FM1	SMALL FORCEMAIN
FM2	LARGE FORCEMAIN
LS-2	LS-2 FORCEMAIN
V	(DIAMETER) VENT LINE
CA	CONSTRUCTION ACCESS

NOTES:

1. EXISTING PIPING, EQUIPMENT, AND TOPOGRAPHY IS SHOWN SCREENEDAND/OR LIGHT-LINED. NEW PIPING, EQUIPMENT, STRUCTURE, AND FINISHED GRADE IS SHOWN HEAVY-LINED.
2. THIS IS A STANDARD LEGEND SHEET. SOME SYMBOLS MAY APPEAR ON THIS SHEET AND NOT BE USED ON THE PLANS.

DESIGNED K ALACON
DRAWN J MARTIN
CHECKED K ALACON
APPROVED M FISHER

WATERWORKS ENGINEERS
2290 Douglas Blvd., Suite 105 • Roseville, CA 95661 • 916-780-2888

CITY OF MORRO BAY
WATER RECLAMATION FACILITY
LIFT STATIONS AND OFFSITE PIPELINES

GENERAL
CIVIL LEGEND

REGISTERED PROFESSIONAL ENGINEER
No. 067194
CIVIL
STATE OF CALIFORNIA
05-29-2020

DATE MAY 2020
PROJECT NUMBER 17-082
DRAWING NUMBER G-6
SHEET NUMBER 6

FILENAME: 1782D-G005.dgn PLOT DATE: 5/23/2020 8:26:53 AM

CONFORMED SET - DEC 2020

ARCHITECTURAL LEGEND

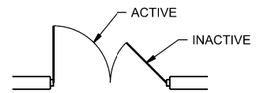

INDICATES PAIR OF DOORS

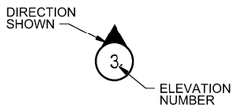

EXTERIOR OR INTERIOR WALL ELEVATION



ROOM DESIGNATION



DOOR DESIGNATION



LOUVER DESIGNATION



WINDOW DESIGNATION



FIRE EXTINGUISHER



DOOR, HATCH, OR WINDOW HINGE LOCATION

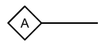

WALL TYPE DESIGNATION



NFPA SIGN

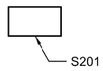

SIGN DESIGNATION

MATERIAL SYMBOLS



CONCRETE

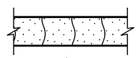

CMU PLAN



CMU SECTION

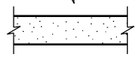

GYPSUM WALLBOARD

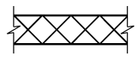

RIGID INSUL ATION

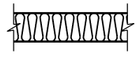

BATT INSULATION

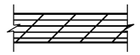

PLYWOOD

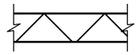

METAL STUD WALL



WOOD SECTION

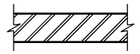

STEEL



ACOUSTICAL TILE

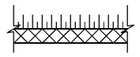

CARPET

DOOR SCHEDULE						
DOOR NUMBER	DOOR DIMENSIONS	SILL DETAIL	EXIT DEVICE	WALL	CLOSURE	LOCK
1	3'-0" X 7'-2"	8110, TYPE B	NR	CMU	R	R
2	3'-0" X 7'-2"	8110, TYPE B	NR	CMU	R	R
3	3'-8" X 7'-10"	8110, TYPE B	NR	CMU	R	R
4	5'-8" X 7'-10" DBL	8110, TYPE B	NR	CMU	R	R
5	5'-8" X 7'-10" DBL	8110, TYPE B	NR	CMU	R	R

Notes:
1. INSTALL DOORS AND FRAMES IN ACCORDANCE WITH THE STEEL DOOR INSTITUTE'S RECOMMENDATIONS. PROVIDE TRIM AND JOINT SEALANT AROUND FRAMES TO INSURE A WEATHER
2. SEE SPEC SECTION 09700 - DOOR HARDWARE FOR ALL DOOR HARDWARE INCLUDING EXIT DEVICES AND PRIVACY LATCHES.
3. R= REQUIRED; NR= NOT REQUIRED

GENERAL ARCHITECTURAL NOTES:

1. UNLESS OTHERWISE NOTED, PLAN DIMENSIONS ARE TO NOMINAL SURFACE OF MASONRY, FACE OF STUDS AND FACE OF CONCRETE WALLS.
2. REPETITIVE FEATURES ARE NOT DRAWN IN THEIR ENTIRETY AND SHALL BE COMPLETELY PROVIDED AS IF DRAWN IN FULL.
3. VERIFY ALL ROUGH-IN DIMENSIONS FOR EQUIPMENT PROVIDED IN THIS CONTRACT, OR BY OTHERS.
4. REFER TO ARCHITECTURAL, STRUCTURAL, MECHANICAL, ELECTRICAL AND OTHER CATEGORIES OF DRAWINGS FOR ADDITIONAL NOTES.
5. VERIFY SIZE AND LOCATION OF, AND PROVIDE: ALL OPENINGS THROUGH FLOORS AND WALLS, ACCESS DOORS, FURRING, CURBS, ANCHORS AND INSERTS. PROVIDE ALL BASES, BLOCKING REQUIRED FOR ACCESSORIES, MECHANICAL, ELECTRICAL AND OTHER EQUIPMENT.

2016 CALGREEN NON-RESIDENTIAL NOTES:

1. THE NON-RESIDENTIAL PROVISIONS OF THE 2016 CALGREEN CODE OUTLINE PLANNING, DESIGN AND DEVELOPMENT METHODS THAT INCLUDE ENVIRONMENTAL RESPONSIBLE SITE SELECTION, BUILDING DESIGN, BUILDING SITTING AND DEVELOPMENT TO PROTECT, RESTORE AND ENHANCE THE ENVIRONMENTAL QUALITY OF THE SITE AND RESPECT THE INTEGRITY OF ADJACENT PROPERTIES; ESTABLISHES THE MEANS OF CONSERVING WATER USED INDOORS, OUTDOORS AND IN WASTEWATER CONVEYANCE; OUTLINES MEANS OF ACHIEVING MATERIAL CONSERVATION AND RESOURCE EFFICIENCY; AND OUTLINES MEANS OF REDUCING THE QUANTITY OF AIR CONTAMINANTS.
2. SWPPP: DEVELOP A SWPPP COMPLIANT WITH STATE STORM WATER NPDES CONSTRUCTION PERMIT OR LOCAL ORDINANCE, WHICHEVER IS STRICTER PER CALGREEN 5.106.1.
3. GRADING AND PAVING: SITE GRADING AND DRAINAGE SYSTEM SHALL SLOPE AWAY FROM THE BUILDING PER THE CONSTRUCTION DRAWINGS AND CALGREEN 5.106.10.
4. WEATHER PROTECTION: PROVIDE A WEATHER-RESISTANT EXTERIOR WALL AND FOUNDATION ENVELOPE AS SHOWN IN THE CONSTRUCTION DRAWINGS AND AS REQUIRED BY CALIFORNIA BUILDING CODE SECTION 1403.2 AND CALIFORNIA ENERGY CODE SECTION 150, MANUFACTURER'S INSTALLATION INSTRUCTIONS OR LOCAL ORDINANCE, WHICHEVER IS MORE STRINGENT PER CALGREEN 5.407.1.
5. CONSTRUCTION WASTE MANAGEMENT: RECYCLE AND/OR SALVAGE FOR REUSE A MINIMUM OF 65% OF NONHAZARDOUS CONSTRUCTION AND DEMOLITION DEBRIS OR MEET LOCAL ORDINANCE, WHICHEVER IS MORE STRINGENT PER CALGREEN 5.408.1.
6. CONSTRUCTION WASTE MANAGEMENT PLAN: WHERE A LOCAL JURISDICTION DOES NOT HAVE A CONSTRUCTION AND DEMOLITION WASTE MANAGEMENT ORDINANCE THAT IS MORE STRINGENT, SUBMIT A CONSTRUCTION WASTE MANAGEMENT PLAN PER CALGREEN 5.408.1.1.
7. WASTE MANAGEMENT COMPANY: UTILIZE A WASTE MANAGEMENT COMPANY THAT CAN PROVIDE VERIFIABLE DOCUMENTATION THAT THE PERCENTAGE OF CONSTRUCTION AND DEMOLITION WASTE MATERIAL DIVERTED FROM THE LANDFILL COMPLIES WITH THE CONSTRUCTION WASTE MANAGEMENT. THE OWNER OR CONTRACTOR SHALL MAKE THE DETERMINATION IF THE CONSTRUCTION AND DEMOLITION WASTE MATERIAL WILL BE DIVERTED BY A WASTE MANAGEMENT COMPANY PER CALGREEN 5.408.1.2.
8. DOCUMENTATION: PROVIDE TO THE ENFORCING AGENCY WHICH DEMONSTRATES COMPLIANCE WITH CALGREEN SECTION 5.408.1.1 THROUGH 5.408.1.3. THE WASTE MANAGEMENT PLAN SHALL BE UPDATED AS NECESSARY AND SHALL BE ACCESSIBLE DURING CONSTRUCTION FOR EXAMINATION BY THE ENFORCING AGENCY PER CALGREEN 5.408.1.4.
9. EXCAVATED SOIL AND LAND CLEARING DEBRIS: 100 PERCENT OF TREES, STUMPS, ROCKS AND ASSOCIATED VEGETATION AND SOILS FROM LAND CLEARING SHALL BE REUSED OR RECYCLED PER CALGREEN 5.408.3.
10. TESTING AND ADJUSTING: TESTING AND ADJUSTING OF SYSTEMS SHALL BE REQUIRED FOR NEW BUILDINGS LESS THAN 10,000 SQUARE FEET OR NEW SYSTEMS TO SERVE AN ADDITION OR ALTERATION SUBJECT TO CALGREEN SECTION 303.1 PER CALGREEN SECTION 5.410.4.
11. SYSTEMS: DEVELOP A WRITTEN PLAN OF PROCEDURES FOR TESTING AND ADJUSTING SYSTEMS. SYSTEMS TO BE INCLUDED FOR TESTING AND ADJUSTING SHALL INCLUDE, AS APPLICABLE TO THE PROJECT HVAC AND LIGHTING AND CONTROLS PER CALGREEN 5.410.4.2.
12. PROCEDURES: PERFORM TESTING AND ADJUSTING PROCESS IN ACCORDANCE WITH THE PROJECT SPECIFICATIONS, MANUFACTURER'S SPECIFICATIONS AND CALGREEN 5.410.4.3.
13. REPORTING: AFTER COMPLETION OF TESTING, ADJUSTING, AND BALANCING, PROVIDE A FINAL REPORT OF TESTING SIGNED BY THE INDIVIDUAL RESPONSIBLE FOR PERFORMING THE SERVICES PER CALGREEN 5.410.4.4.
14. O & M MANUAL: PROVIDE THE BUILDING OWNER OR REPRESENTATIVE WITH DETAILED OPERATING AND MAINTENANCE INSTRUCTIONS AND COPIES OF GUARANTIES/WARRANTIES FOR EACH SYSTEM. O & M INSTRUCTIONS SHALL BE CONSISTENT WITH THE PROJECT SPECIFICATIONS, OSHA REQUIREMENTS IN CCR, TITLE 8 SECTION 5142, AND CALGREEN 5.410.4.5. INCLUDE A COPY OF ALL INSPECTION VERIFICATIONS AND REPORTS REQUIRED BY THE ENFORCING AGENCY.

2016 CALGREEN NON-RESIDENTIAL NOTES (CONTINUED):

15. COVERING OF DUCT OPENING AND PROTECTION OF MECHANICAL EQUIPMENT DURING CONSTRUCTION: AT THE TIME OF ROUGH INSTALLATION OR DURING STORAGE ON THE CONSTRUCTION SITE AND UNTIL FINAL STARTUP OF THE HEATING AND COOLING EQUIPMENT, ALL DUCT AND OTHER RELATED AIR DISTRIBUTION COMPONENT OPENINGS SHALL BE COVERED WITH TAPE, PLASTIC, SHEET METAL OR OTHER METHODS ACCEPTABLE TO THE ENFORCING AGENCY TO REDUCE THE AMOUNT OF DUST OR DEBRIS WHICH MAY COLLECT IN THE SYSTEM PER CALGREEN 5.504.3.
16. ADHESIVES, SEALANTS, CAULKS: ADHESIVES AND SEALANTS USED ON THE PROJECT SHALL MEET THE REQUIREMENTS OF THE FOLLOWING STANDARDS PER CALGREEN 5.504.4.1:
    a. ADHESIVES, ADHESIVE BONDING PRIMERS, ADHESIVE PRIMERS, SEALANTS, SEALANT PRIMERS, AND CAULKS SHALL COMPLY WITH LOCAL OR REGIONAL AIR POLLUTION CONTROL OR AIR QUALITY MANAGEMENT DISTRICT RULES WHERE APPLICABLE, OR SCAQMD RULE 1168 VOC LIMITS, AS SHOWN IN CALGREEN TABLES 5.504.4.1 AND 5.504.4.2.
    b. AEROSOL ADHESIVES, AND SMALLER UNIT SIZES OF ADHESIVES, AND SEALANT OR CAULKING COMPOUNDS (IN UNITS OF PRODUCT, LESS PACKAGING, WHICH DO NOT WEIGH MORE THAN ONE POUND AND DO NOT CONSIST OF MORE THAN 16 FLUID OUNCES) SHALL COMPLY WITH STATEWIDE VOC STANDARDS AND OTHER REQUIREMENTS, INCLUDING PROHIBITIONS ON USE OF CERTAIN TOXIC COMPOUNDS, OF CALIFORNIA CODE OF REGULATIONS, TITLE 17, COMMENCING WITH SECTION 94507.
17. PAINTS AND COATINGS: ARCHITECTURAL PAINTS AND COATINGS SHALL COMPLY WITH CALGREEN TABLE 5.504.4.2 UNLESS MORE STRINGENT LOCAL LIMITS APPLY PER CALGREEN 5.504.4.3.
18. AEROSOL PAINTS AND COATINGS: AEROSOL PAINTS AND COATINGS SHALL MEET THE PWMIR LIMITS FOR ROC IN SECTION 94522(A)(3) AND OTHER REQUIREMENTS, INCLUDING PROHIBITIONS ON USE OF CERTAIN TOXIC COMPOUNDS AND OZONE DEPLETING SUBSTANCES IN SECTIONS 94522(C)(2) AND (D)(2) OF CALIFORNIA CODE OF REGULATIONS, TITLE 17, COMMENCING WITH SECTION 94520 PER CALGREEN 5.504.4.3.1.
19. VERIFICATION: VERIFICATION OF POLLUTANT CONTROL SHALL BE PROVIDED AT THE REQUEST OF THE ENFORCING AGENCY. DOCUMENTATION MAY INCLUDE, BUT IS NOT LIMITED TO, THE MANUFACTURER'S PRODUCT SPECIFICATION OR FIELD VERIFICATION OF ON-SITE PRODUCT CONTAINERS PER CALGREEN 5.504.4.3.2.
20. INDOOR MOISTURE CONTROL: BUILDINGS SHALL MEET OR EXCEED THE PROVISIONS OF CBC, CGR, TITLE 24, PART 2, SECTIONS 1203 (VENTILATION) AND CHAPTER 14 (EXTERIOR WALLS) PER CALGREEN 5.505.1.
21. OUTSIDE AIR DELIVERY: FOR MECHANICALLY OR NATURALLY VENTILATED SPACES IN BUILDINGS, MEET THE MINIMUM REQUIREMENTS OF SECTION 120.1 OF THE 2013 CEC, OR THE APPLICABLE LOCAL CODE, WHICHEVER IS MORE STRINGENT, AND DIVISION 1, CHAPTER 4 OF CCR, TITLE 8 PER CALGREEN 5.506.1.
22. CFCS: INSTALL HVAC AND REFRIGERATION EQUIPMENT THAT DOES NOT CONTAIN CFCS PER CALGREEN 5.508.1.1.

Pump Station A Flood Design Data

Flood Design Data (2016 CBC §1603.1.7 and §1612.5)

Flood Design Class = 3 (ASCE 24-14 Table 1-1)

FEMA Flood Zone = AE (FIRM Panel 813 dated May 16, 2017)

Base Flood Elevation (BFE) = 19.97ft

Electrical Building Finished Floor Elevation = 23.00 ft

Wet Well Lowest Floor Elevation = -9.50 ft



05-29-2020

DESIGNED A LINDEMAN
DRAWN J MARTIN
CHECKED A LINDEMAN
APPROVED M FISHER

WATERWORKS ENGINEERS
2290 Douglas Blvd., Suite 105 • Roseville, CA 95661 • 916-780-2888

CITY OF MORRO BAY
WATER RECLAMATION FACILITY
LIFT STATIONS AND OFFSITE PIPELINES

GENERAL
ARCHITECTURAL LEGEND AND MATERIAL SYMBOLS

DATE MAY 2020
PROJECT NUMBER 17-082
DRAWING NUMBER G-7
SHEET NUMBER 7

FILENAME: 1782D-G006.dgn PLOT DATE: 5/23/2020 8:28:32 AM

CONFORMED SET - DEC 2020

STRUCTURAL NOTES

DEFERRED SUBMITTALS:

1. PER 2016 CBC 107.3.4.1 THE FOLLOWING ITEMS, DRAWINGS AND CALCULATIONS, SHALL BE STAMPED BY AN ENGINEER REGISTERED IN THE STATE OF THE PROJECT. ITEMS SHALL BE SUBMITTED TO THE REGISTERED DESIGN PROFESSIONAL IN RESPONSIBLE CHARGE FOR REVIEW AND APPROVAL. FOLLOWING APPROVAL BY THE REGISTERED DESIGN PROFESSIONAL IN RESPONSIBLE CHARGE, THE CONTRACTOR SHALL SUBMIT THE ITEMS TO THE BUILDING OFFICIAL WITH A NOTATION INDICATING THAT THE DEFERRED SUBMITTAL DOCUMENTS HAVE BEEN REVIEWED AND FOUND TO BE IN GENERAL CONFORMANCE TO THE DESIGN OF THE STRUCTURE. THE CONTRACTOR SHALL NOT START FABRICATION OR ERECTION PRIOR TO REVIEW AND APPROVAL BY THE BUILDING OFFICIAL. THE CONTRACTOR SHALL INCLUDE IN HIS BID ALL TIME AND EFFORT REQUIRED TO OBTAIN A BUILDING OFFICIAL REVIEW/PERMIT FOR THE FOLLOWING PREFABRICATED STRUCTURAL COMPONENTS:
   - PRECAST CONCRETE ELEMENTS
   - HANDRAIL AND GUARDRAIL
   - PIPE SUPPORT SYSTEM
   - ANCHORAGE OF EQUIPMENT OVER 400 POUNDS
   - WOOD TRUSSES
   - PRE-ENGINEERED PIPE BRIDGE

DESIGN CRITERIA:

1. APPLICABLE CODE: 2016 CALIFORNIA BUILDING CODE (2015 INTERNATIONAL BUILDING CODE (IBC), AS AMENDED BY THE STATE OF CALIFORNIA).

2. REFER TO THE SPECIFICATIONS FOR ADDITIONAL AND SPECIFIC STRUCTURAL LOADINGS AND REQUIREMENTS.

3. LIVE LOADS:
   - ROOF LIVE LOAD — 20 psf
   - WET WELL ROOF LIVE LOAD — 250 psf

4. WIND LOAD:
   - BASIC WIND SPEED (ASCE 7-10) — 115 mph
   - EXPOSURE CATEGORY — C
   - DESIGN METHOD — DIRECTIONAL PROCEDURE

5. SEISMIC LOAD:
   - FACILITY 07 PIPE BRIDGE
     - RISK CATEGORY — III
     - IMPORTANCE FACTOR, I_e — 1.25
     - S_S: 1.152 — S_{DS}: 0.798
     - S_1: 0.426 — S_{D1}: 0.447
     - SITE CLASS — D
     - SEISMIC DESIGN CATEGORY — D
   - FACILITY 10 PUMP STATION A
     - RISK CATEGORY — III
     - IMPORTANCE FACTOR, I_e — 1.25
     - S_S: 1.158 — S_{DS}: 0.800
     - S_1: 0.427 — S_{D1}: 0.448
     - SITE CLASS — D
     - SEISMIC DESIGN CATEGORY — D
     -
   - FACILITY 20 PUMP STATION B
     - RISK CATEGORY — III
     - IMPORTANCE FACTOR, I_e — 1.25
     - S_S: 1.152 — S_{DS}: 0.798
     - S_1: 0.426 — S_{D1}: 0.447
     - SITE CLASS — D
     - SEISMIC DESIGN CATEGORY — D

6. LATERAL FORCE RESISTING SYSTEM:
   - FACILITY 10 & 20 ELECTRICAL BUILDING
     - SPECIAL REINFORCED MASONRY SHEAR WALLS
     - $V = C_sW$
     - $C_s = 0.200$
     - R = 5
     - ANALYSIS PROCEDURE = EQUIVALENT LATERAL FORCE
   - FACILITY 10 & 20 WET WELLS
     - SPECIAL REINFORCED CONCRETE SHEAR WALLS
     - $V = C_sW$
     - $C_s = 0.200$
     - R = 5
     - ANALYSIS PROCEDURE = EQUIVALENT LATERAL FORCE

GENERAL INFORMATION:

1. ALL CONSTRUCTION SHALL CONFORM TO THE 2016 EDITION OF THE BUILDING CODE.

2. DESIGN DETAILS ARE INTENDED TO BE TYPICAL AND SHALL APPLY TO ALL SIMILAR SITUATIONS OCCURRING THROUGHOUT THE PROJECT, WHETHER OR NOT THEY ARE KEYED IN EACH LOCATION. CONSULT THE ENGINEER FOR REVIEW PRIOR TO CONSTRUCTION.

3. VERIFY ALL OPENING DIMENSIONS IN WALLS, SLABS, AND DECKS WITH THE ARCHITECTURAL, MECHANICAL, HVAC AND ELECTRICAL DRAWINGS.

4. FOR NUMBER, TYPE, SIZE, ARRANGEMENT, AND/OR LOCATION OF EQUIPMENT PADS AND OPENINGS SEE ARCHITECTURAL, MECHANICAL, ELECTRICAL, HVAC AND PLUMBING DRAWINGS. COORDINATE ALL OPENINGS AND EQUIPMENT PADS WITH OTHER DISCIPLINES AND EQUIPMENT SUPPLIERS PRIOR TO PLACING SLABS, WALLS AND FOUNDATIONS.

5. NO STRUCTURAL MEMBER SHALL BE CUT FOR PIPES, DUCTS, ETC UNLESS SPECIFICALLY DETAILED OR APPROVED IN WRITING BY THE ENGINEER.

FOUNDATIONS:

1. IN ACCORDANCE WITH THE GEOTECHNICAL INVESTIGATION REPORT #217-053 BY YEH AND ASSOCIATES, INC., FOUNDATIONS HAVE BEEN DESIGNED FOR THE FOLLOWING VALUES:
   - ALLOWABLE BEARING, DEAD + LIVE LOADS — 2,000 psf
   - MINIMUM FOOTING EMBEDMENT — 18 INCHES
   - LATERAL EARTH PRESSURES (DRAINED)
     - ACTIVE — 35 pcf
     - AT-REST — 55 pcf
     - PASSIVE — 300 pcf
   - LATERAL EARTH PRESSURE (UNDRAINED)
     - ACTIVE — 80 pcf
     - AT-REST — 91 pcf
     - PASSIVE — 300 pcf
   - SLIDING FRICTION COEFFICIENT — 0.4
   - SURCHARGE, FINISH GRAED TO A DEPTH OF 10FT — 72 psf

2. NO BACKFILL SHALL BE PLACED BEHIND CANTILEVERED, FREE TOP WALLS UNTIL THE CONCRETE HAS ATTAINED 100% OF ITS SPECIFIED COMPRESSIVE STRENGTH.

3. NO BACKFILL SHALL BE PLACED BEHIND WALLS THAT ARE CONNECTED TO ELEVATED FLOOR OR ROOF SLABS OR DECKS UNTIL THE FLOOR OR ROOF SLAB HAS ATTAINED 100% OF ITS SPECIFIED COMPRESSIVE STRENGTH AND ALL ROOF AND FLOOR DECKING IS IN PLACE AND WELDED, SCREWED, OR NAILED AS APPROPRIATE.

4. GRADE TO DRAIN AWAY FROM STRUCTURES A MINIMUM GRADE OF 5% FOR A MINIMUM OF 10'-0" FROM STRUCTURE PERIMETER.

5. THE CONTRACTOR SHALL PROVIDE THE ENGINEER AT LEAST 48 BUSINESS HOURS NOTICE FOLLOWING EXCAVATION FOR FOUNDATIONS AND PRIOR TO THE PLACEMENT OF FORMWORK, REINFORCING STEEL AND CONCRETE.

FORMWORK, SHORING AND BRACING:

1. THE STRUCTURES SHOWN ON THE DRAWINGS HAVE BEEN DESIGNED FOR STABILITY UNDER FINAL CONDITIONS ONLY. THE DESIGN SHOWN DOES NOT INCLUDE THE NECESSARY COMPONENTS OR EQUIPMENT FOR THE STABILITY OF THE STRUCTURE DURING CONSTRUCTION. THE CONTACTOR IS RESPONSIBLE FOR ALL WORK RELATING TO CONSTRUCTION ERECTION METHODS, BRACING, SHORING, RIGGING, GUYS SCAFFOLDING, FORMWORK, AND OTHER WORK AIDS REQUIRED TO SAFELY PERFORM THE WORK SHOWN. CONSTRUCTION OF SHORING AND BRACING OF FORMWORK SHALL BE IN ACCORDANCE WITH ACI 347 "GUIDE TO FORMWORK FOR CONCRETE".

PIPE BRIDGE:

1. THE PRE-ENGINEERED PIPE BRIDGE FOUNDATION IS ONLY PRELIMINARY FOR BIDDING PURPOSES. THE CONTRACTOR IS TO SUBMIT BRIDGE DRAWINGS AND STRUCTURAL CALCULATIONS, BASED ON THE LAYOUT SHOWN, DESIGNED AND SIGNED BY A CIVIL OR STRUCTURAL ENGINEER LICENSED IN CALIFORNIA. ONCE THE BRIDGE DRAWINGS AND CALCULATIONS HAVE BEEN REVIEWED AND APPROVED BY THE ENGINEER, THE BRIDGE FOUNDATION MAY BE REDESIGNED AND REISSUED TO THE CONTRACTOR FOR CONSTRUCTION.

2. SHOULD THE CONTRACTOR REQUEST REVISIONS TO THE LAYOUT TO FACILITATE THEIR OPERATION OF THE BRIDGE MANUFACTURER, THE CONTRACTOR SHALL COMPENSATE THE OWNER FOR SUCH ADDITIONAL REVISIONS.

CONCRETE:

1. STRUCTURAL CONCRETE SHALL HAVE A MINIMUM COMPRESSIVE STRENGTH OF 4,000 PSI AT 28 DAYS AND A SLUMP AS SPECIFIED IN SECTION 03300 - CAST-IN-PLACE CONCRETE.

2. THE CONTRACTOR SHALL SUBMIT THE CONCRETE MIX DESIGNS TO THE ENGINEER FOR REVIEW AND APPROVAL PRIOR TO USE.

3. HORIZONTAL CONSTRUCTION JOINTS SHALL BE PREPARED TO EXPOSE CLEAN, SOLIDLY EMBEDDED AGGREGATE OVER THE ENTIRE JOINT INTERFACE.

4. PLACEMENT OF PIPES, CONDUITS OR OTHER EMBEDDED ITEMS IN THE CONCRETE SHALL BE IN ACCORDANCE WITH THESE DRAWINGS OR SHALL BE APPROVED BY THE ENGINEER.

5. NO ALUMINUM OR ANY OTHER MATERIAL INJURIOUS TO CONCRETE SHALL BE EMBEDDED IN THE CONCRETE.

6. CONCRETE SHALL BE MIXED AND DELIVERED IN ACCORDANCE WITH ASTM C94.

7. THE REQUIREMENTS FOR CONCRETE MIXES, PLACING, TESTING AND CURING ARE CONTAINED IN THE PROJECT SPECIFICATIONS.

8. PORTLAND CEMENT SHALL CONFORM TO ASTM C150 TYPE II, AGGREGATE SHALL CONFORM TO ASTM C33.

9. CONTINUOUS WATERSTOP, AS SPECIFIED, SHALL BE INSTALLED IN ALL EXPANSION, CONTRACTION, CONTROL AND CONSTRUCTION JOINTS IN WALLS AND SLABS OF CONTAINMENT STRUCTURES, WATER HOLDING BASINS, CHANNELS, AND BELOW GRADE STRUCTURES, EXCEPT WHERE SPECIFICALLY NOTED OTHERWISE.

10. THE CONCRETE JOINTS IN SLABS AND WALLS, AS SHOWN, ARE MINIMUM REQUIREMENTS. CONTRACTOR MAY SUBMIT ALTERNATE CONSTRUCTION JOINT LAYOUT DRAWINGS, SUBJECT TO SPECIFIED REQUIREMENTS, TO THE ENGINEER FOR REVIEW AND APPROVAL PRIOR TO CONSTRUCTION.

11. THE CONTRACTOR SHALL PROVIDE THE ENGINEER AT LEAST 48 BUSINESS HOURS NOTICE PRIOR TO THE PLACEMENT OF CONCRETE TO ALLOW SUFFICIENT TIME FOR INSPECTIONS AND SCHEDULING OF TESTING SERVICES.

CONCRETE REINFORCING:

1. CLEARANCE FOR REINFORCEMENT BARS, UNLESS SHOWN OTHERWISE, SHALL BE: CAST AGAINST EARTH = 3", SURFACES OF PRIMARY AND SECONDARY LIQUID CONTAINING STRUCTURES = 2", ALL OTHER CONCRETE SURFACES: #5 BAR OR SMALLER = 1 1/2", #6 BAR OR LARGER = 2".

2. REFER TO WALL CORNER AND WALL INTERSECTION REINFORCING DETAIL 3303. WALL CORNER REINFORCING SIZES AND SPACINGS SHALL BE AS SHOWN ON THE DRAWINGS AND REFERENCED TO THIS DETAIL. TYPICAL HORIZONTAL WALL REINFORCING SHALL LAP WITH THE CORNER HORIZONTAL REINFORCING.

3. PROVIDE A MINIMUM OF TWO VERTICAL WALL BARS WITH MATCHING DOWELS AT WALL ENDS, CORNERS AND INTERSECTIONS WITH SIZE TO MATCH TYPICAL VERTICAL REINFORCING STEEL AS SHOWN. VERTICAL WALL BARS SHALL BE LAPPED WITH DOWELS FROM BASE SLABS AND EXTENDED INTO THE TOP FACE OF ROOF SLABS AND LAPPED WITH TOP SLAB REINFORCEMENT.

4. ALL BENDS, UNLESS OTHERWISE SHOWN, SHALL BE 90 DEGREE ACI 318 STANDARD HOOKS.

5. ALL REINFORCING BENDS AND LAPS, UNLESS OTHERWISE NOTED, SHALL SATISFY THE FOLLOWING MINIMUM REQUIREMENTS:

CONCRETE DESIGN STRENGTH = 4,000 PSI #		GRADE 60 REINFORCED STEEL						
BAR SIZE		#4	#5	#6	#7	#8	#9	#10
LAP SPLICE LENGTH								
SPACING <6"	TOP BAR *	2'-8"	3'-4"	4'-0"	5'-10"	6'-8"	8'-6"	10'-10"
	OTHER BAR	2'-1"	2'-7"	3'-1"	4'-6"	5'-2"	6'-7"	8'-4"
SPACING ≥6"	TOP BAR *	1'-8"	2'-0"	2'-5"	3'-6"	4'-0"	5'-0"	6'-2"
	OTHER BAR	1'-4"	1'-7"	1'-10"	2'-9"	3'-1"	3'-10"	4'-9"

* TOP BARS SHALL BE DEFINED AS ANY HORIZONTAL BARS PLACED SUCH THAT MORE THAN 12" OF CONCRETE IS CAST IN THE MEMBER BELOW THE BAR IN ANY SINGLE POUR. HORIZONTAL WALL BARS ARE CONSIDERED TOP BARS.

\# WHERE 3,000 PSI CONCRETE IS USED, INCREASE ABOVE LENGTHS BY 16%

DESIGNED J KELLOGG
DRAWN J MARTIN
CHECKED J KELLOGG
APPROVED M FISHER

WATERWORKS ENGINEERS
2290 Douglas Blvd., Suite 105 • Roseville, CA. 95661 • 916-780-2888

CITY OF MORRO BAY
WATER RECLAMATION FACILITY
LIFT STATIONS AND OFFSITE PIPELINES

GENERAL
STRUCTURAL NOTES

REGISTERED PROFESSIONAL ENGINEER
ANDREW L. UMPHENOUR
No. C88058
CIVIL
STATE OF CALIFORNIA
05-29-2020

DATE: MAY 2020
PROJECT NUMBER: 17-082
DRAWING NUMBER: G-8
SHEET NUMBER: 8

CONFORMED SET - DEC 2020

STRUCTURAL NOTES

MASONRY:

1. SOLID GROUT ALL CELLS UNLESS INDICATED OTHERWISE.
2. MORTAR SHALL CONFORM TO ASTM C270, TYPE S, HYDRATED AND SHALL HAVE A MINIMUM 28 DAY COMPRESSIVE STRENGTH OF 1,900 PSI.
3. GROUT SHALL CONFORM TO ASTM C476 AND SHALL HAVE A MINIMUM 28 DAY COMPRESSIVE STRENGTH OF 2,000 PSI CONTAINING NO MASONRY CEMENT.
4. CONCRETE BLOCK UNITS SHALL BE MEDIUM WEIGHT AND CONFORM TO ASTM C90 AND SHALL HAVE A MINIMUM 28 DAY COMPRESSIVE STRENGTH OF 1,900 PSI. LINEAR SHRINKAGE SHALL NOT EXCEED 0.065 PERCENT.
5. PLACE COURSES IN RUNNING BOND PATTERN, UNLESS SPECIFICALLY INDICATED OTHERWISE.
6. REINFORCING STEEL FOR MASONRY SHALL CONFORM TO ASTM A615, GRADE 60 FOR DEFORMED BARS. LAP VERTICAL REINFORCING 48 BAR DIAMETERS. LAP VERTICAL REINFORCING IN CANTILEVER WALLS 72 BAR DIAMETERS. LAP HORIZONTAL REINFORCING 48 BAR DIAMETERS. STAGGER ADJACENT LAP SPLICES BY 24 INCHES, WHEN SEPARATED BY 3 INCHES OR LESS. REFERENCE STANDARD DETAIL 4002 - REINFORCED CMU WALL.
7. HORIZONTAL REINFORCING BARS SHALL BE CONTINUOUS AROUND WALL CORNERS AND THROUGH WALL INTERSECTIONS AND HOOKED AT WALL ENDS AS SHOWN IN THE DETAILS.
8. VERTICAL REINFORCING SHALL BE PLACED AT CORNERS, EACH SIDE OF OPENINGS, END WALLS (INCLUDING EACH SIDE OF CONTROL JOINTS), AT A MAXIMUM SPACING INDICATED IN THE DRAWINGS, AND CONTINUOUS FROM FOUNDATION TO TOP OF WALL.
9. CMU REINFORCING AT WALL INTERSECTIONS AND CORNERS SHALL BE AS INDICATED IN STANDARD DETAIL 4001 - CMU WALL CORNERS, UNLESS INDICATED OTHERWISE.
10. CMU REINFORCING AT ALL WALL ENDS, JAMBS AND DOOR OPENINGS, WINDOW LINTELS, LOUVERS AND PENETRATIONS SHALL BE INDICATED IN STANDARD DETAIL 4004 - CMU OPENINGS GREATER THAN 3'-0" OR STANDARD DETAIL 4003 - CMU OPENINGS LESS THAN 3'-0", UNO.
11. CMU WALL CONTROL JOINTS SHALL BE LOCATED WHERE SHOWN ON THE DRAWINGS AND SHALL RUN CONTINUOUS FROM THE TOP OF FOUNDATION TO TOP OF WALL. ALL HORIZONTAL NON-STRUCTURAL BARS SHALL BE TERMINATED IN A STANDARD HOOK EACH SIDE OF JOINT. STRUCTURAL BARS SHALL BE CONTINUOUS THROUGH CONTROL JOINTS.

WOOD NAILING:

1. NAILS SHALL BE "COMMON" WIRE NAILS, UNLESS OTHERWISE SPECIFIED. NAILS SHALL BE PREDRILLED, IF REQUIRED, TO AVOID SPLITTING THE MEMBER. NAILS SHALL BE THE FOLLOWING SIZES:
   - 10d COMMON = 0.148"φx 3"
   - 16d COMMON = 0.162"φ x 3 1/2"
2. THE EDGE DISTANCE FOR NAILING IN MEMBERS WHERE PLYWOOD PANELS ARE TO ABUT SHALL BE 3/4" FOR 3X OR WIDER AND 3/8" FOR 2X NOMINAL MEMBERS.
3. FASTENERS FOR PRESERVATIVE-TREATED AND FIRE RETARDANT-TREATED WOOD SHALL BE OF HOT DIPPED ZINC-COATING. FASTENERS SHALL BE IN ACCORDANCE WITH ASTM A153.
4. NAILS IN STRUCTURAL WOOD PANELS SHALL BE DRIVEN SO THAT THEIR HEADS ARE FLUSH WITH THE PANEL SURFACE.
5. USE OF MACHINE NAILING IS SUBJECT TO A SATISFACTORY JOB SITE DEMONSTRATION AND ENGINEER'S APPROVAL. APPROVAL IS SUBJECT TO SATISFACTORY PERFORMANCE. IF NAIL HEADS PENETRATE THE FACE PLY MORE THAN WOULD BE NORMAL FOR A HAND HAMMER, OR IF MINIMUM ALLOWABLE EDGE DISTANCES ARE NOT MAINTAINED, THE PERFORMANCE WILL BE DEEMED UNSATISFACTORY.
6. SHEATHING PANELS SHALL BUTT AT CENTERLINE OF A SINGLE SUPPORTING MEMBER WITH EDGE NAILING FROM EACH PANEL INTO THAT MEMBER.
7. ALL TOP PLATES, SILLS AND STUDS SHALL HAVE EDGE NAILING AT THE CENTERLINE OF MEMBER.
8. PIECES OF WALL, ROOF OR FLOOR SHEATHING SHALL BE NO LESS THAN 12" IN LEAST DIMENSION. PIECES LESS THAN 24" SHALL HAVE 3X4 FLAT MIN BLKG @ UNSUPPORTED PANEL EDGES.
9. UNLESS NOTED ON DRAWINGS, FASTENING SHALL BE AS SPECIFIED BELOW:

BLOCKING BETWEEN JOISTS, RAFTERS OR TRUSSES:	
TO JOIST, RAFTER OR TRUSS EACH END	2-16d EN OR 4-10d TN
BLOCKING BETWEEN STUDS:	
EACH SIDE TO NAILS	2-10d
OR END NAILS	2-16d
SILL PLATE TO JOIST OR BLOCKING, FACE NAIL	16d @16" OC
TOP PLATE TO STUD, END NAIL	2-16d
STUD TO SILL PLATE	3-16d EN or 4-8d TN
DOUBLED STUDS OR JOISTS, FACE NAIL	16d @12" OC

ROUGH CARPENTRY:

1. DIMENSIONS ARE TYPICALLY SHOWN TO FACE OF STUD FOR EXTERIOR WALLS, CENTERLINE OF STUD AT INTERIOR WALLS AND TO CENTERLINE OF OPENINGS.
2. STRUCTURAL FRAMINGS SHALL BE DOUGLAS FIR (DF) OF THE GRADES INDICATED OR BETTER (WWPA GRADING RULES) WITH 19% MAXIMUM MOISTURE CONTENT:
   BEAMS AND STRINGERS:
   - 4x — NO. 1
   - 6x — NO. 1
   - JOISTS, RAFTERS & LEDGERS, 2x AND 4x — NO. 1
   - POSTS AND TIMBERS — NO. 1
   - STUDS, SILL & PLATES: 2x4 — STUD
   - 2x6 — NO. 1
   - 2x8 AND LARGER — NO. 1
   - MISC. FRAMING LUMBER NOT NOTED — NO. 2
3. SILLS ON CONCRETE SLAB ON GRADE SHALL BE APPROVED PRESSURE TREATED DF. EACH PIECE SHALL BEAR THE AWPA STAMP. CUTS AND BORED HOLES OF TREATED DF SHALL BE TREATED WITH COPPER GREEN.
4. FASTENERS FOR PRESERVATIVE-TREATED AND FIRE RETARDANT-TREATED WOOD SHALL BE OF HOT DIPPED ZINC-COATED GALVANIZED STEEL, OR STAINLESS STEEL. THE COATING WEIGHTS FOR ZINC-COATED FASTENERS SHALL BE IN ACCORDANCE WITH ASTM A153. HARDWARE SHALL BE COATED PER SIMPSON STRONG TIE 'CORROSION INFORMATION'.
5. WOOD STRUCTURAL MEMBERS SHALL NOT BE DRILLED OR NOTCHED EXCEPT AS SHOWN OR AS APPROVED BY THE ENGINEER.
6. FRAMING HARDWARE NOTED IS SIMPSON STRONG-TIE AND SHALL BE INSTALLED WITH CONNECTORS SPECIFIED FOR EACH SPECIFIC DEVICE BY THE MANUFACTURER'S CURRENT CATALOG. EQUIVALENT DEVICES APPROVED BY THE ENGINEER MAY BE SUBSTITUTED. SINKERS SHALL NOT BE USED.
7. WALL TOP PLATES SHALL HAVE JOINTS AT A STUD CENTERLINE. END JOINTS IN DOUBLE TOP PLATES SHALL BE OFFSET AT LEAST 4'-0".
8. BOLT HOLES IN WOOD AND/OR STEEL SHALL BE 1/16" LARGER THAN BOLTS. STANDARD CUT WASHERS SHALL BE PROVIDED UNDER THE HEADS AND NUTS OF ALL BOLTS BEARING ON WOOD. 3" X 3"X ¼" PLATE WASHERS SHALL BE USED UNDER ALL ANCHOR BOLTS.
9. ALL NUTS SHALL BE TIGHTENED WHEN PLACED AND RETIGHTENED PRIOR TO APPLICATION OF FINISH OR AT COMPLETION OF JOB.
10. BLOCKING 2X WIDTH OF STUD, SHALL BE PROVIDED AT FLOOR, CEILING AND ROOF LINES AND SO THAT UNBRACED LENGTH OF STUD DOES NOT EXCEED 10'-0".
11. ALL JOISTS AND RAFTERS SHALL HAVE FULL DEPTH SOLID BLOCKING (2X MIN) OR CONTINUOUS RIM JOIST AT ALL SUPPORTS.
12. EXCEPT WHERE NOTED OTHERWISE, STUD WALLS SHALL BE 2X6 @ 16" OC MAXIMUM SPACING.
13. LAG BOLTS AND WOOD SCREWS SHALL BE SCREWED, NOT DRIVEN, INTO PLACE. LEAD HOLES SHALL BE PREBORED PER NDS CHAPTER 11.

EXPANSION ANCHORS:

1. EXPANSION ANCHORS SHALL BE STAINLESS STEEL HILTI KWIK BOLT TZ OR SIMPSON STRONG-BOLT 2, UNLESS NOTED OTHERWISE. INSTALL ANCHORS IN CONFORMANCE WITH THE MANUFACTURER'S REQUIREMENTS AND ICC REPORT.
2. SPECIAL INSPECTION IS REQUIRED PER CBC SECTION 1705 AND THE REQUIREMENTS OF THE ICC REPORT.
3. CONTRACTOR SHALL VERIFY MINIMUM EDGE DISTANCES, SPACING AND THICKNESSES ARE IN ACCORDANCE WITH THE MANUFACTURER'S REQUIREMENTS PRIOR TO INSTALLING ANCHORS.
4. WHEN DRILLING HOLES IN EXISTING CONCRETE, USE CARE AND CAUTION TO AVOID CUTTING OR DAMAGING THE EXISTING REINFORCING BARS. MAINTAIN A REASONABLE CLEARANCE BETWEEN REINFORCEMENT AND THE DRILLED-IN ANCHOR.
5. THE SPECIAL INSPECTOR MUST BE PRESENT ON THE JOB SITE DURING ANCHOR INSTALLATION TO VERIFY ANCHOR TYPE, ANCHOR DIMENSIONS, HOLE CLEANLINESS, EMBEDMENT DEPTH, CONCRETE TYPE, DRILL BIT DIAMETER, HOLE DEPTH, EDGE DISTANCE, ANCHOR SPACING, AND CONCRETE THICKNESS.

ADHESIVE ANCHORS:

1. THE ADHESIVE ANCHOR SYSTEM USED FOR POST-INSTALLED ANCHORAGE TO CONCRETE SHALL CONFORM TO THE REQUIREMENTS OF THE MOST RECENTLY PUBLISHED ACI 355.4, ACCEPTANCE CRITERIA FOR QUALIFICATION OF POST-INSTALLED ADHESIVE ANCHORS IN CONCRETE AND COMMENTARY. THE ANCHOR SYSTEM SHALL BE ONE OF THE FOLLOWING:
   - HILTI HIT-HY 200.
   - SIMPSON SET-3G.
2. ADHESIVE ANCHORS SHALL BE SUPPLIED AS AN ENTIRE SYSTEM INCLUDING, BUT NOT LIMITED TO, THE NEW ADHESIVE CARTRIDGE, A CLEAN MIXING NOZZLE, EXTENSION TUBE, A DISPENSING GUN, AND ALL MANUFACTURER RECOMMENDED SUPPLIES FOR PROPERLY CLEANING THE DRILLED HOLE.
3. ALL-THREAD ROD TO BE USED IN ADHESIVE ANCHOR ASSEMBLIES SHALL CONFORM TO ASTM A36, A193 (GR B7), A307, OR F1554. STAINLESS STEEL ANCHOR RODS SHALL BE TYPE 316. NUTS, WASHERS, AND OTHER HARDWARE USED WITH AN ALL-THREAD SHALL HAVE A MATERIAL OR ALLOY DESIGNATION THAT MATCHES THE ALL-THREAD MATERIAL / ALLOY.
4. REINFORCING BARS SHALL BE ASTM A615 OR A706.
5. CONCRETE SHALL HAVE A MINIMUM COMPRESSIVE STRENGTH OF 2,500 PSI AT THE TIME OF ADHESIVE ANCHOR INSTALLATION. CONCRETE SHALL HAVE A MINIMUM AGE OF 21 DAYS AT THE TIME OF ADHESIVE ANCHOR INSTALLATION.
6. CONCRETE TEMPERATURE AT THE TIME OF ADHESIVE ANCHOR INSTALLATION SHALL BE AT LEAST 50ºF.
7. EMBEDMENT DEPTH AND ANCHOR PROJECTION FROM THE CONCRETE SURFACE SHALL BE AS SHOWN ON THE DRAWINGS FOR THE PARTICULAR ANCHOR OR GROUP OF ANCHORS BEING INSTALLED. ABSENT ANY INFORMATION, THE MINIMUM EMBEDMENT DEPTH SHALL BE 12d WHERE "d" IS THE ANCHOR DIAMETER.
8. ADHESIVE ANCHORS SHALL BE INSTALLED BY QUALIFIED PERSONNEL TRAINED TO INSTALL ADHESIVE ANCHORS IN ACCORDANCE WITH THE SPECIFICATIONS. POST-INSTALLED ADHESIVE ANCHORS SHALL BE INSTALLED IN ACCORDANCE WITH THE MANUFACTURER'S PRINTED INSTALLATION INSTRUCTIONS.
9. INSTALLATION OF ADHESIVE ANCHORS HORIZONTALLY OR UPWARDLY INCLINED TO SUPPORT SUSTAINED TENSION LOADS SHALL BE PERFORMED BY PERSONNEL CERTIFIED BY ACI/CRSI ADHESIVE ANCHOR INSTALLER CERTIFICATION PROGRAM. THESE ANCHORS ARE DESIGNATED WITH A (CERT) AFTER THE ANCHOR CALL-OUT.
10. THE INSTALLER'S QUALIFICATIONS SHALL BE SUBMITTED AND APPROVED IN ACCORDANCE WITH SECTION 05051 OF THE SPECIFICATIONS.
11. WHEN DRILLING HOLES IN EXISTING CONCRETE, USE CARE AND CAUTION TO AVOID CUTTING OR DAMAGING THE EXISTING REINFORCING BARS. MAINTAIN A REASONABLE CLEARANCE BETWEEN REINFORCEMENT AND THE DRILLED-IN ANCHOR.
12. SPECIAL INSPECTION IS REQUIRED PER CBC SECTION 1705 AND THE REQUIREMENTS OF THE ICC REPORT. THE SPECIAL INSPECTOR MUST BE PERIODICALLY ON THE JOBSITE DURING ANCHOR INSTALLATION TO VERIFY ANCHOR TYPE, ANCHOR DIMENSIONS, HOLE CLEANLINESS, EMBEDMENT DEPTH, CONCRETE TYPE, DRILL BIT DIAMETER, HOLE DEPTH, EDGE DISTANCE, ANCHOR SPACING, AND CONCRETE THICKNESS.
13. ADHESIVE ANCHORS INSTALLED IN HORIZONTAL OR UPWARDLY INCLINED ORIENTATIONS TO RESIST SUSTAINED TENSION LOADS SHALL BE CONTINUOUSLY INSPECTED DURING INSTALLATION BY AN INSPECTOR SPECIALLY APPROVED FOR THAT PURPOSE BY THE BUILDING OFFICIAL.

DESIGNED J KELLOGG
DRAWN B TROTTER
CHECKED J KELLOGG
APPROVED M FISHER

WATERWORKS ENGINEERS
2280 Douglas Blvd., Suite 105 • Roseville, CA 95661 • 916-780-2888

CITY OF MORRO BAY
WATER RECLAMATION FACILITY
LIFT STATIONS AND OFFSITE PIPELINES

GENERAL
STRUCTURAL NOTES CONTINUED

REGISTERED PROFESSIONAL ENGINEER — ANDREW L. LINDEMANN — No. C88058 — CIVIL — STATE OF CALIFORNIA
05-29-2020

DATE: MAY 2020
PROJECT NUMBER: 17-082
DRAWING NUMBER: G-9
SHEET NUMBER: 9

FILENAME: 1782D-G007.dgn PLOT DATE: 5/23/2020 8:46:34 AM

CONFORMED SET - DEC 2020

STRUCTURAL NOTES

STRUCTURAL OBSERVATION:

1. STRUCTURAL OBSERVATION SHALL BE IN ACCORDANCE WITH THE 2015 CBC SECTION 1704.6 TOGETHER WITH LOCAL AND STATE AMENDMENTS.

2. THE OWNER SHALL EMPLOY A REGISTERED DESIGN PROFESSIONAL TO PERFORM STRUCTURAL OBSERVATIONS FOR GENERAL CONFORMANCE TO THE APPROVED CONSTRUCTION DOCUMENTS. STRUCTURAL OBSERVATION DOES NOT WAIVE THE RESPONSIBILITY FOR ANY REQUIRED SPECIAL INSPECTIONS OR INSPECTIONS BY THE BUILDING OFFICIAL.

3. ONSITE STRUCTURAL OBSERVATION SHALL BE PERFORMED AT LEAST ONCE A MONTH, PLUS AT COMPLETION, FOR EACH SEISMIC FORCE OR WIND FORCE RESISTING SYSTEM IDENTIFIED, INCLUDING FOUNDATIONS AND CONNECTIONS.

4. AT THE CONCLUSION OF CONSTRUCTION, THE STRUCTURAL OBSERVER SHALL SJBMIT TO THE BUILDING OFFICIAL A WRITTEN STATEMENT THAT THE SITE VISITS HAVE BEEN MADE AND IDENTIFY ANY REPORTED DEFICIENCIES WHICH, TO THE BEST OF THE STRUCTURAL OBSERVER'S KNOWLEDGE, HAVE NOT BEEN RESOLVED.

5. STRUCTURAL OBSERVATION SHALL INCLUDE VISUAL OBSERVATION OF THE STRUCTURAL SYSTEM AT SIGNIFICANT CONSTRUCTION STAGES AND AT COMPLETION OF THE STRUCTURAL SYSTEM FOR EACH STRUCTURE CONTAINED IN THE WORK. "HE CONTRACTOR SHALL SCHEDULE AND FACILITATE STRUCTURAL OBSERVATION INCLUDING THE FOLLOWING:
   - FOUNDATION REINFORCING STEEL, WATERSTOPS, EMBEDS, AND SIMILAR ITEMS PRIOR TO CONCRETE PLACEMENT.
   - WALL TO FOUNDATION CONNECTIONS PRIOR TO FORM CLOSURE FOR ALL MATERIALS.
   - CONCRETE WALLS PRIOR TO CONCRETE PLACEMENT.
   - ELEVATED CONCRETE SLABS AND BEAMS PRIOR TO CONCRETE PLACEMENT.
   - MASONRY WALL REINFORCING STEEL PRIOR TO GROUTING AND PRIOR TO CLOSING OF CLEANOUTS.
   - SYSTEM CONNECTION EMBEDS PRIOR TO GROUT OR CONCRETE PLACEMENTS.
   - ALL OTHER WALL ANCHORAGE CONNECTIONS FOR MATERIALS NOT SPECIFICALLY IDENTIFIED ABOVE.

STATEMENT OF SPECIAL INSPECTIONS:

1. SPECIAL INSPECTION IS IN ADDITION TO THE INSPECTIONS REQUIRED BY SECTION 110 OF THE CBC. THE OWNER SHALL EMPLOY A SPECIAL INSPECTOR DURING CONSTRUCTION ON THE TYPES OF WORK INDICATED BELOW.

2. SPECIAL INSPECTIONS SHALL BE PERFORMED BY AN INDEPENDENT QUALIFIED PERSON WHO IS ACCEPTABLE TO THE ENGINEER AND BUILDING DEPARTMENT. THE INSPECTORS FOR EACH SYSTEM AND MATERIAL WILL BE ICC CERTIFIED OR OTHERWISE APPROVED BY THE BUILDING OFFICIAL. THE SPECIAL INSPECTOR SHALL OBSERVE THE INDICATED WORK FOR COMPLIANCE WITH THE APPROVED CONTRACT DOCUMENTS AND SUBMIT RECORDS OF INSPECTION.

3. INSPECTION RECORDS AND TESTING REPORTS SHALL BE SUBMITTED TO THE ENGINEER, OWNER, AND BUILDING OFFICIAL WITHIN ONE WEEK OF INSPECTION OR WITHIN ONE WEEK OF TEST COMPLETION.

4. AT THE CONCLUSION OF CONSTRUCTION, A FINAL REPORT DOCUMENTING REQU'RED SPECIAL INSPECTIONS AND CORRECTION OF DISCREPANCIES SHALL BE SUBMITTED.

5. PERIODIC SPECIAL INSPECTION IS DEFINED AS SPECIAL INSPECTION BY THE SPECIAL INSPECTOR WHO IS INTERMITTENTLY PRESENT WHERE THE WORK TO BE INSPECTED HAS BEEN OR IS BEING PERFORMED.

6. SPECIAL INSPECTION IS REQUIRED PER CHAPTER 17 OF THE CBC FOR THE FOLLOWING ITEMS:
   - SOILS (BY CONTRACTOR PER SPECIFICATION SECTION 02300)
   - CONCRETE CONSTRUCTION
   - MASONRY CONSTRUCTION

REQUIRED VERIFICATION AND SPECIAL INSPECTION OF SOILS

	VERIFICATION AND INSPECTION	CONTINUOUS	PERIODIC	REFERENCED STANDARD	2015 CBC REFERENCE
1.	VERIFY MATERIALS BELOW SHALLOW FOUNDATIONS ARE ADEQUATE TO ACHIEVE THE DESIGN BEARING CAPACITY	-	X	SECTION 02300 - EARTHWORK	1705.6, 1804
2.	VERIFY EXCAVATIONS ARE EXTENDED TO PROPER DEPTH AND HAVE REACHED PROPER MATERIAL	-	X	SECTION 02300 - EARTHWORK	1705.6
3.	PERFORM CLASSIFICATION AND TESTING OF COMPACTED FILL MATERIALS	-	X	SECTION 02300 - EARTHWORK	1705.6
4.	VERIFY USE OF PRCPER MATERIALS, DENSITIES AND LIFT THICKNESSES DURING PLACEMENT AND COMPACTION OF COMPACTED FILL	X	-	SECTION 02300 - EARTHWORK	1705.6
5.	PRIOR TO PLACEMENT OF COMPACTED FILL, OBSERVE SUBGRADE AND VERIFY THAT SITE HAS BEEN PREPARED PROPERLY	-	X	SECTION 02300 - EARTHWORK	1705.6

REQUIRED SPECIAL INSPECTION OF CONCRETE CONSTRUCTION

	VERIFICATION AND INSPECTION	CONTINUOUS	PERIODIC	REFERENCED STANDARD	2015 CBC REFERENCE
1.	INSPECTION OF REINF STEEL AND PLACEMENT	-	X	ACI 318: Ch. 20, 25.2, 25.3, 26.6.1-26.6.3	1908.4
3.	INSPECTION OF ANCHORS CAST IN CONCRETE	-	X	ACI 318: 17.8.2	-
4.a.	INSPECTION OF ADHESIVE ANCHORS INSTALLED IN HORIZONTALLY OR UPWARDLY INCLINED ORIENTATIONS TO RESIST SUSTAINED TENSION LOADS	X	-	ACI 318: 17.8.2.4	-
4.b.	INSPECTION OF MECHANICAL ANCHORS AND ADHESIVE ANCHORS NOT DEFINED IN 4.a.	-	X	ACI 318: 17.8.2	-
5.	VERIFYING USE OF REQUIRED DESIGN MIX	-	X	ACI 318: Ch. 19, 26.4.3, 26.4.4	1904.1, 1904.2, 1908.2, 1908.3
6.	PRIOR TO CONCRETE PLACEMENT, FABRICATE SPECIMENS FOR STRENGTH TESTS, PERFORM SLUMP AND AIR CONTENT TESTS, AND DETERMINE THE TEMPERATURE OF THE CONCRETE.	X	-	ASTM: C172, C31 ACI318: 26.4, 26.12	1908.10
7.	INSPECT CONCRETE PLACEMENT FOR PROPER APPLICATION TECHNIQUES	X	-	ACI 318: 26.5	1908.6, 1908.7, 1908.8
8.	VERIFY MAINTENANCE OF SPECIFIED CURING TEMPERATURE AND TECHNIQUES	-	X	ACI 318: 26.5.3-26.5.5	1908.9
11.	VERIFY IN-SITU CONCRETE STRENGTH, PRIOR TO STRESSING OF TENDONS IN POST-TENSIONED CONCRETE AND PRIOR TO REMOVAL OF SHORES AND FORMS FROM BEAMS AND STRUCTURAL SLABS	-	X	ACI 318: 26.11.2	-
12.	INSPECTION FORMWORK FOR SHAPE, LOCATION AND DIMENSIONS OF THE CONCRETE MEMBER BEING FORMED	-	X	ACI 318: 26.11.1.2(b)	-

REQUIRED SPECIAL INSPECTION OF MASONRY CONSTRUCTION, LEVEL B, RISK CATEGORY II & III

	INSPECTION TASK	CONTINUOUS	PERIODIC	REFERENCE STANDARD: TMS 402/602	REFERENCE STANDARD: TMS 402/602
1.	VERIFY COMPLIANCE WITH THE APPROVED SUBMITTALS	-	X	-	Art. 1.5
2.	AS MASONRY CONSTRUCTION BEGINS, VERIFY THAT THE FOLLOWING ARE IN COMPLIANCE:				
2a.	PROPORTIONS OF SITE-PREPARED MORTAR AND GROUT	-	x	-	Art. 2.1, 2.6 A
2b.	CONSTRUCTION OF MORTAR JOINTS	-	X	-	Art. 3.3 B
2d.	LOCATION OF REINF AND CONNECTORS	-	X	-	Art. 3.4, 3.6 A
3.	PRIOR TO GROUTING, THE FOLLOWING SHALL BE VERIFIED TO ENSURE COMPLIANCE:				
3a.	GROUT SPACE	-	X	-	Art. 3.2 D, 3.2 F
3b.	GRADE, TYPE, AND SIZE OF REINF AND ANCHOR BOLTS	-	X	Sec. 1.16	Art. 2.4, 3.4
3c.	PLACEMENT OF REINF AND CONNECTORS	-	X	Sec. 1.16	Art. 3.2 E, 3.4, 3.6 A
3d.	PROPORTIONS OF SITE-PREPARED GROUT	-	X	-	Art. 2.6 B, 2.4 G.1.b
3e.	CONSTRUCTION OF MORTAR JOINTS	-	X	-	Art. 3.3 B
4.	VERIFY DURING CONSTRUCTION:				
4a.	SIZE AND LOCATION OF STRUCTURAL ELEMENTS	-	X	-	Art. 3.3 F
4b.	TYPE, SIZE AND LOCATION OF ANCHORS, INCLUDING OTHER DETAILS OF ANCHORAGE OF MASONRY TO STRUCTURAL MEMBERS, FRAMES OR OTHER CONSTRUCTION	-	X	Sec. 1.16.4.3, 1.17.1	-
4d.	PREPARATION, CONSTRUCTION, AND PROTECTION OF MASONRY DURING COLD WEATHER OR HOT WEATHER	-	X	-	Art. 1.8 C, 1.8 D
4f.	PLACEMENT OF GROUT	X	-	-	Art. 3.5
5.	OBSERVE PREPARATION OF GROUT SPECIMENS, MORTAR SPECIMENS, AND/OR PRISMS	-	X	-	Art. 1.4 B.2.a.3, 1.4 B.2.b.3, 1.4 B.2.c.3, 1.4 B.3, 1.4 B.4
	REQUIRED MINIMUM TESTS:				
1.	VERIFICATION OF SLUMP FLOW AND VSI AS DELIVERED TO THE SITE FOR SELF-CONSOLIDATING GROUT	-	X	-	Art, 1.5 B.1.b.3
2.	VERIFICATION OF f'm PRIOR TO CONSTRUCTION	-	X	-	Art. 1.4 B

DESIGNED J KELLOGG
DRAWN J MARTIN
CHECKED J KELLOGG
APPROVED M FISHER

WATERWORKS ENGINEERS
2290 Douglas Blvd., Suite 105 • Roseville, CA 95661 • 916-780-2888

CITY OF MORRO BAY
WATER RECLAMATION FACILITY
LIFT STATIONS AND OFFSITE PIPELINES

GENERAL
STRUCTURAL INSPECTIONS

REGISTERED PROFESSIONAL ENGINEER
ANDREW L. LUKEN
No. C88058
CIVIL
STATE OF CALIFORNIA
05-29-2020

DATE MAY 2020
PROJECT NUMBER 17-082
DRAWING NUMBER G-10
SHEET NUMBER 10

CONFORMED SET - DEC 2020

PIPING SYMBOLS

SYMBOL	SINGLE LINE	DESCRIPTION
		EXISTING PIPE (SCREENED)
		NEW PIPE
		EXISTING PIPE TO BE ABANDONED
		EXISTING PIPE TO BE DEMOLISHED OR REMOVED AND SALVAGED

VALVES

SYMBOL	VALVE TYPE
	BALL VALVE
V	VENTED BALL VALVE
	CORPORATION STOP VALVE
	BUTTERFLY VALVE
	DIAPHRAGM VALVE
	GATE VALVE
K	KNIFE GATE
	GLOBE VALVE
	MUD VALVE
	MULTIPORT VALVE
	NEEDLE VALVE
	PINCH VALVE
	PLUG VALVE
	PLUG VALVE (ECCENTRIC)
	BALL CHECK VALVE
	DOUBLE DISK SWING CHECK VALVE
	DUCKBILL CHECK
	SILENT CHECK VALVE
	SWING CHECK VALVE
	TELESCOPING VALVE
	AIR RELIEF VALVE
	AIR VACUUM VALVE
	COMBINATION AIR RELIEF AIR VACUUM VALVE
	PRESSURE REGULATING VALVE
	PRESSURE RELIEF VALVE
	HOSE BIBB OR FLUSHING CONNECTION
	BACKFLOW PREVENTER VALVE

PUMPS

SYMBOL	PUMP TYPE
	CENTRIFUGAL PUMP
	SUBMERSIBLE PUMP
	VERTICAL TURBINE PUMP (PLAN)
	VERTICAL TURBINE PUMP (SECTION)
	DIAPHRAGM METERING PUMP
	PERISTALIC PUMP
	PROGRESSIVE CAVITY PUMP
M	AXIAL FLOW PUMP

BLOWERS

SYMBOL	BLOWER TYPE
	CENTRIFUGAL BLOWER
	BLOWER FAN

FLOWMETERS

SYMBOL	FLOWMETER TYPE
	MAGNETIC FLOWMETER
	PROPELLER FLOWMETER

FILTERS AND STRAINERS

SYMBOL	FILTER TYPE
	FILTER
	CARTRIDGE FILTER (SMALL)
	CARTRIDGE FILTER (LARGE)
	BASKET STRAINER

MIXERS

SYMBOL	MIXER TYPE
M	MIXER
	STATIC MIXER
	WAFER STATIC MIXER

ACTUATORS

SYMBOL	ACTUATOR TYPE
M	MOTOR ACTUATOR
P	PNEUMATIC ACTUATOR
S	SOLENOID ACTUATOR

GATES / WEIR

SYMBOL	GATE / WEIR TYPE
	SLIDE GATE
	STOP LOG
	WEIR

MISC EQUIPMENT

SYMBOL	TYPE
WM	WATER METER
	AIR DIFFUSER
	SPRAY BAR OR DIFFUSER
	EMERGENCY EYEWASH AND SHOWER

MISC FITTING SYMBOLS

SYMBOL	EQUIPMENT TYPE
	Y STRAINER
	PULSATION DAMPER
	GAUGE
	DIAPHRAGM SEAL
	RUPTURE DISK (PRESSURE)
	RUPTURE DISK (VACUUM)
	ORIFICE
	BLIND FLANGE OR TANK NOZZLE
	EXPANSION COUPLING
	FLEXIBLE COUPLING
	UNION
	CONCENTRIC REDUCER
	ECENTRICE REDUCER
	CAP
	FEMALE QUICK CONNECT
	MALE QUICK CONNECT
	QUICK CONNECT WITH CAP
	QUICK CONNECT COUPLING
	DRAIN
	DRAIN
	SIGHT GLASS
	CALIBRATION COLUMN
FI	ROTAMETER
FI	ROTAMETER WITH NEEDLE VALVE

MISC SYMBOLS

SYMBOL	DESCRIPTION
S	SAMPLE
	WATER SURFACE
	EQUIPMENT TAG

PIPING DESIGNATIONS

DOUBLE LINE PIPES

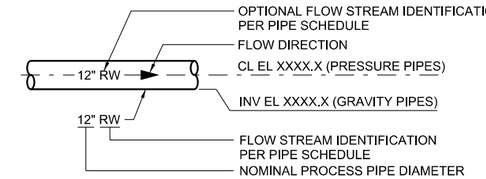

SINGLE LINE PIPES

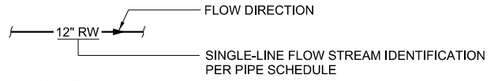

VALVE DESIGNATIONS

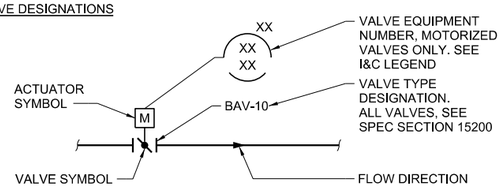

NOTES:

1. MOTORIZED VALVE SHOWN, MANUAL VALVE SIMILAR.

NOTES:

1. ONLY FLANGED END CONNECTIONS ARE SHOWN HERE FOR DOUBLE LINE FITTINGS. FITTINGS WITH OTHER END PATTERNS ARE SHOWN SIMILARLY ON THE CONSTRUCTION DRAWINGS. ALSO SEE PIPING SPECIFICATIONS AND THE PIPING SCHEDULE.
2. SYMBOLS SHOWN HERE FOR SINGLE LINE FITTINGS ARE GENERIC ONLY. REFER TO PIPING SPECIFICATIONS FOR SPECIFIC END CONNECTIONS FOR SINGLE LINE PIPE AND FITTINGS.

GENERAL PIPING NOTES:

1. LAY PIPE TO UNIFORM GRADE BETWEEN INDICATED ELEVATION POINTS. MINIMUM COVER SHALL BE 36 INCHES UNLESS OTHERWISE SHOWN.
2. SIZE OF FITTINGS SHOWN ON DRAWINGS SHALL CORRESPOND TO ADJACENT STRAIGHT RUN OF PIPE, UNLESS OTHERWISE INDICATED. TYPE OF JOINT AND FITTING MATERIAL SHALL BE THE SAME AS SHOWN FOR ADJACENT STRAIGHT RUN OF PIPE.
3. LOCATION AND NUMBER OF PIPE HANGERS AND PIPE SUPPORTS SHOWN IS ONLY APPROXIMATE. FINAL SUPPORT REQUIREMENTS SHALL BE DETERMINED IN THE FIELD AND APPROVED BY THE ENGINEER PRIOR TO INSTALLATION. MAXIMUM SPACING SHALL BE AS SPECIFIED.
4. APPROPRIATE STANDARD WALL PIPE DETAIL SHALL BE USED WHEREVER PIPING PASSES FROM A STRUCTURE TO BACKFILL.
5. ALL FLEXIBLE CONNECTORS OR FLANGED COUPLING ADAPTERS SHALL BE PROVIDED WITH THRUST TIES, BLOCKS, OR ANCHORS, UNLESS OTHERWISE NOTED. THRUST PROTECTION SHALL BE ADEQUATE FOR TEST PRESSURES SPECIFIED.
6. SYMBOLS, LEGENDS, AND PIPE USE IDENTIFICATIONS SHOWN SHALL BE FOLLOWED THROUGHOUT THE DRAWINGS, WHEREVER APPLICABLE. ALL OF THE VARIOUS APPLICATIONS ARE NOT NECESSARILY USED IN THE PROJECT.
7. ALL PIPING SPECIFIED TO BE PRESSURE TESTED, EXCEPT FLANGED, WELDED, GROOVED END, OR SCREWED PIPING, SHALL BE PROVIDED WITH TRUST PROTECTION AT ALL DIRECTION CHANGES, UNLESS OTHERWISE NOTED. SEE THRUST DETAILS AND NOTES ON DRAWINGS.
8. NUMBER AND LOCATION OF UNIONS SHOWN ON DRAWINGS ARE ONLY APPROXIMATE. PROVIDE ALL UNIONS NECESSARY TO FACILITATE CONVENIENT REMOVAL OF VALVES AND MECHANICAL EQUIPMENT.
9. THE CONTRACTOR FOR THIS PROJECT IS RESPONSIBLE FOR COORDINATING AND PERFORMING THE CONNECTION OF THE PIPING AND ASSOCIATED APPURTENANCES INSTALLED UNDER THIS CONTRACT TO BOTH THE EXISTING PIPING AND FACILITIES.
10. PRIOR TO SUBMITTING PIPING DRAWINGS FOR ANY NEW PIPE THAT IS TO CONNECT TO OR CROSS AN EXISTING PIPE OR STRUCTURE, THE CONTRACTOR SHALL EXPOSE THE EXISTING PIPE OR STRUCTURE TO VERIFY ITS EXACT LOCATION, SIZE, MATERIALS, AND INVERT ELEVATIONS.
11. COMPONENTS SHOWN WITH A DOUBLE ASTERISK (**) ARE PART OF A PACKAGE SYSTEM. SEE EQUIPMENT SPECIFICATIONS.

REGISTERED PROFESSIONAL ENGINEER — RICHARD T. FORD — No. C87194 — CIVIL — STATE OF CALIFORNIA
05-29-2020

DESIGNED K ALACON
DRAWN J MARTIN
CHECKED J RIESS
APPROVED M FISHER

WATERWORKS ENGINEERS
2290 Douglas Blvd., Suite 105 • Roseville, CA 95661 • 916-780-2888

CITY OF MORRO BAY
WATER RECLAMATION FACILITY
LIFT STATIONS AND OFFSITE PIPELINES

GENERAL
MECHANICAL LEGEND

DATE	MAY 2020
PROJECT NUMBER	17-082
DRAWING NUMBER	G-11
SHEET NUMBER	11

CONFORMED SET - DEC 2020

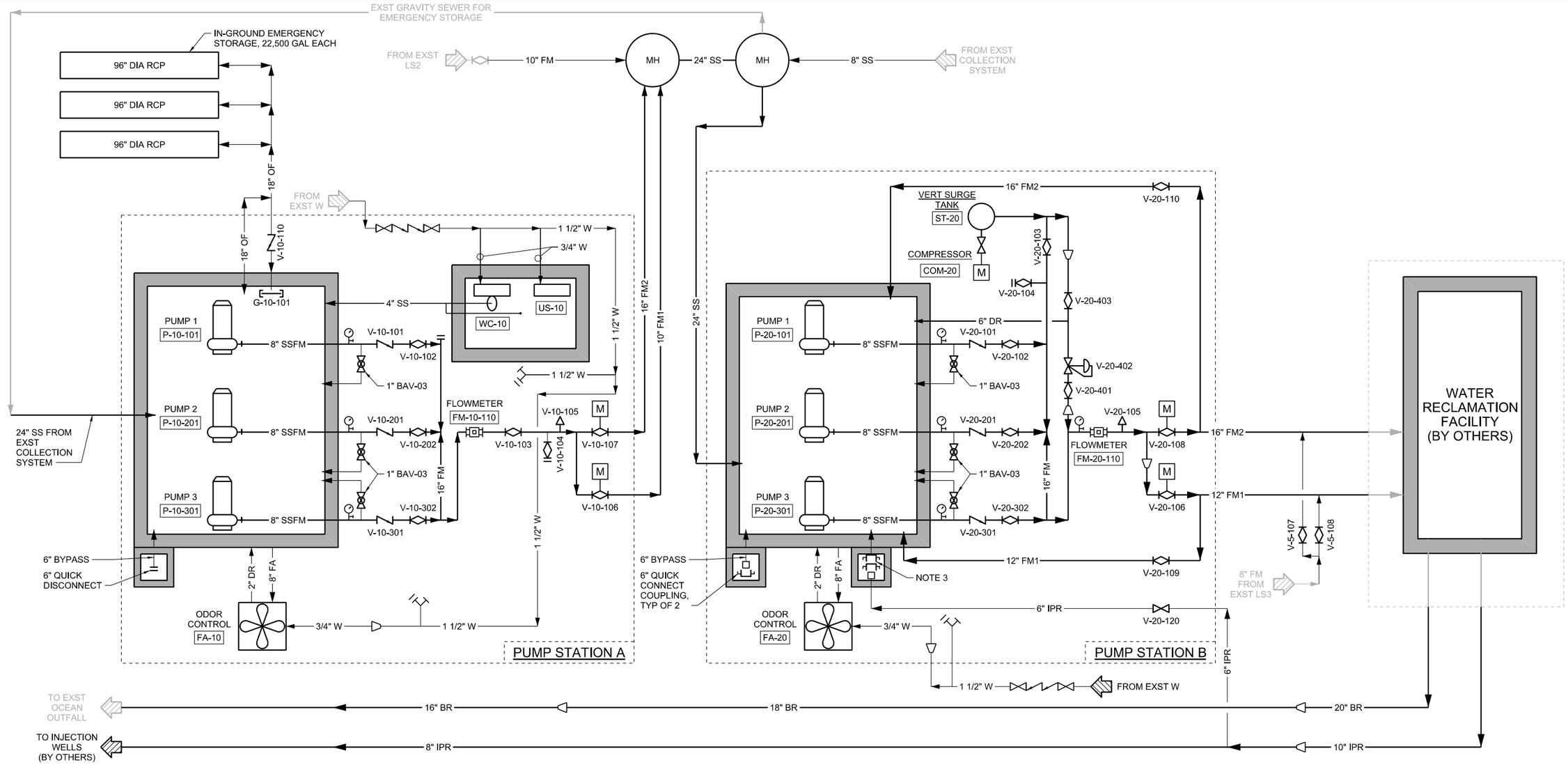

FLOWSTREAM IDENTIFICATION	
BR	BRINE
BYP	BYPASS
DR	DRAIN
FA	FOUL AIR
FM	LS-2 OR LS-3 FORCEMAIN
FM1	SMALL FORCEMAIN
FM2	LARGE FORCEMAIN
IPR	INDIRECT POTABLE REUSE
OF	OVERFLOW
SS	SANITARY SEWER (GRAVITY)
SSFM	SANITARY SEWER FORCEMAIN
V	VENT
W1	POTABLE WATER
W2	UTILITY WATER

PUMP STATION A (PS-A)

60 HP PUMPS (VFDs)	2 DUTY	1 STANDBY
AVERAGE ANNUAL FLOW	422	GPM
PEAK WET WEATHER FLOW	4,034	GPM
FF ELEVATION	21	FT
DIESEL GENERATOR	555	GALLON
ODOR CONTROL	6	AIR CHANGES PER HOUR

PUMP STATION B (PS-B)

250 HP PUMPS (VFDs)	2 DUTY	1 STANDBY
AVERAGE ANNUAL FLOW	666	GPM
PEAK WET WEATHER FLOW	5,540	GPM
FF ELEVATION	32.5	FT
DIESEL GENERATOR	1749	GALLON
ODOR CONTROL	6	AIR CHANGES PER HOUR

LIFT STATION 2 (LS2)

AVERAGE ANNUAL FLOW	189	GPM
PEAK WET WEATHER FLOW	895	GPM

LIFT STATION 3 (LS3)

AVERAGE ANNUAL FLOW	29	GPM
PEAK WET WEATHER FLOW	110	GPM

NOTES:

1. OFFSITE PIPELINE DIAMETERS DEPICTED HEREIN ARE NOMINAL. ACTUAL INNER DIAMETERS VARY. REFERENCE PLAN AND PROFILES FOR MATERIAL TYPES, CLASS AND SIZE.
2. SEE SPECIFICATION SECTION 15200 VALVE SCHEDULE AND PLAN AND PROFILE SHEETS FOR FORCEMAIN VALVING NOT LISTED HERE.
3. REMOVABLE 6" WELDED STEEL MANIFOLD WITH 6" FEMALE QUICK CONNECT.
4. OFFSITE PIPELINES VALVES AND APPURTENANCES NOT DEPICTED. REFERENCE HYDRAULIC GRADE LINE DRAWINGS AND PLAN & PROFILES.

DESIGNED J RIESS
DRAWN F CAVE
CHECKED K ALACON
APPROVED M FISHER

WATERWORKS ENGINEERS
2290 Douglas Blvd., Suite 105 • Roseville, CA 95661 • 916-780-2888

CITY OF MORRO BAY
WATER RECLAMATION FACILITY
LIFT STATIONS AND OFFSITE PIPELINES

GENERAL

PROCESS FLOW DIAGRAM AND DESIGN CRITERIA

REGISTERED PROFESSIONAL ENGINEER — CHARLES TANG — No. 87194 — CIVIL — STATE OF CALIFORNIA — 05-29-2020

DATE MAY 2020
PROJECT NUMBER 17-082
DRAWING NUMBER G-12
SHEET NUMBER 12

CONFORMED SET - DEC 2020

HGL [FT]

313.0'	(12" MAX, 3.7 MGD)
275.2'	(16" MAX, 6.6 MGD)
245.5'	(12" & 16" MAX, 8.5 MGD)
160.5'	(12" AVG, 1 MGD)
149.4'	(12" MIN, 0.5 MGD)

FLOW SCENARIO LEGEND

- SMALLER FM ONLY; 2 PUMPS @ 100% SPEED
- LARGER FM ONLY; 2 PUMPS @ 100% SPEED
- BOTH FMs; 2 PUMPS @ 100% SPEED
- SMALLER FM ONLY; 1 PUMP @ 1 MGD
- SMALLER FM ONLY; 1 PUMP @ 0.5 MGD

FM - 1 MAX WORKING HEAD EL, SEE NOTE 1

FM - 2 MAX WORKING HEAD EL, SEE NOTE 1

175.2'	(12" MAX, 3.7 MGD)
167.5'	(16" MAX, 6.6 MGD)
164.8'	(12" & 16" MAX, 8.5 MGD)
147.7'	(12" AVG, 1 MGD)
145.7'	(12" MIN, 0.5 MGD)

85.5'	(10" MAX, 2.4 MGD)
59.0'	(16" MAX, 5.6 MGD)
50.5'	(10" & 16" MAX, 6.5 MGD)
38.3'	(10" AVG, 1 MGD)
33.3'	(10" MIN, 0.5 MGD)

FM - 1 MAX WORKING HEAD EL, SEE NOTE 1

FM - 2 MAX WORKING HEAD EL, SEE NOTE 1

REFERENCE PLAN AND PROFILES FOR MATERIAL TYPES, CLASSES, AND SIZES

REFERENCE WRF ON-SITE PLAN & PROFILE

FORCE MAIN

EG

STA: 15+23.6± - (E) PS-A CONNECTION

STA: 33+30 2" CARV (FM1) 3" CARV (FM2)

STA: 58+00 PS-B CONNECTION WSE = 20.7 FT REDUCER

STA: 94+30 2" CARV (FM1) 3" CARV (FM2)

STA: 114+00 2" CARV (FM1) 3" CARV (FM2)

STA: 114+00 REDUCER

STA: 149+50 LS3 CONNECTION

STA: 161+75 WRF ON-SITE CONNECTION POINT

STA: 181+46.5± (E) WRF HEADWORKS MAX WSE = 145.0'

STATION

NOTES:

1. USE MAX WORKING HEAD TO CALCULATE FIELD HYDROSTATIC TEST PRESSURE FOR INDIVIDUAL TEST SECTION PURSUANT TO SPEC 15990

DESIGN M KARBAKHSH
DRAWN M TRUITT
CHECKED T LEWIS
APPROVED M FISHER

WATERWORKS ENGINEERS
2260 Douglas Blvd, Suite 100 • Roseville, CA 95661 • 916-780-2888

CITY OF MORRO BAY
WATER RECLAMATION FACILITY
LIFT STATION AND OFFSITE PIPELINES

GENERAL
FORCE MAIN HYDRAULIC GRADE LINE (FPVC)

DATE MAY 2020
PROJECT NUMBER 17-082
DRAWING NUMBER G-13
SHEET NUMBER 13

REGISTERED PROFESSIONAL ENGINEER MICHAEL P. FISHER No. C67194 CIVIL STATE OF CALIFORNIA
05/29/2020

JOB NUMBER: 17-082 FILENAME: 1782D-G012.DWG PLOT DATE: 06/12/20 PLOT TIME: 15:49:18

L:\CAD\PROJECTS\17-082 MORRO BAY PS AND PIPELINE_(S)\PROJECT FILES\DELIVERABLES\1782D-G012.DWG

L:\CAD\PROJECTS\17-082 MORRO BAY PS AND PIPELINE_{S}\PROJECT FILES\DELIVERABLES\1782D-G013.DWG

CONFORMED SET - DEC 2020

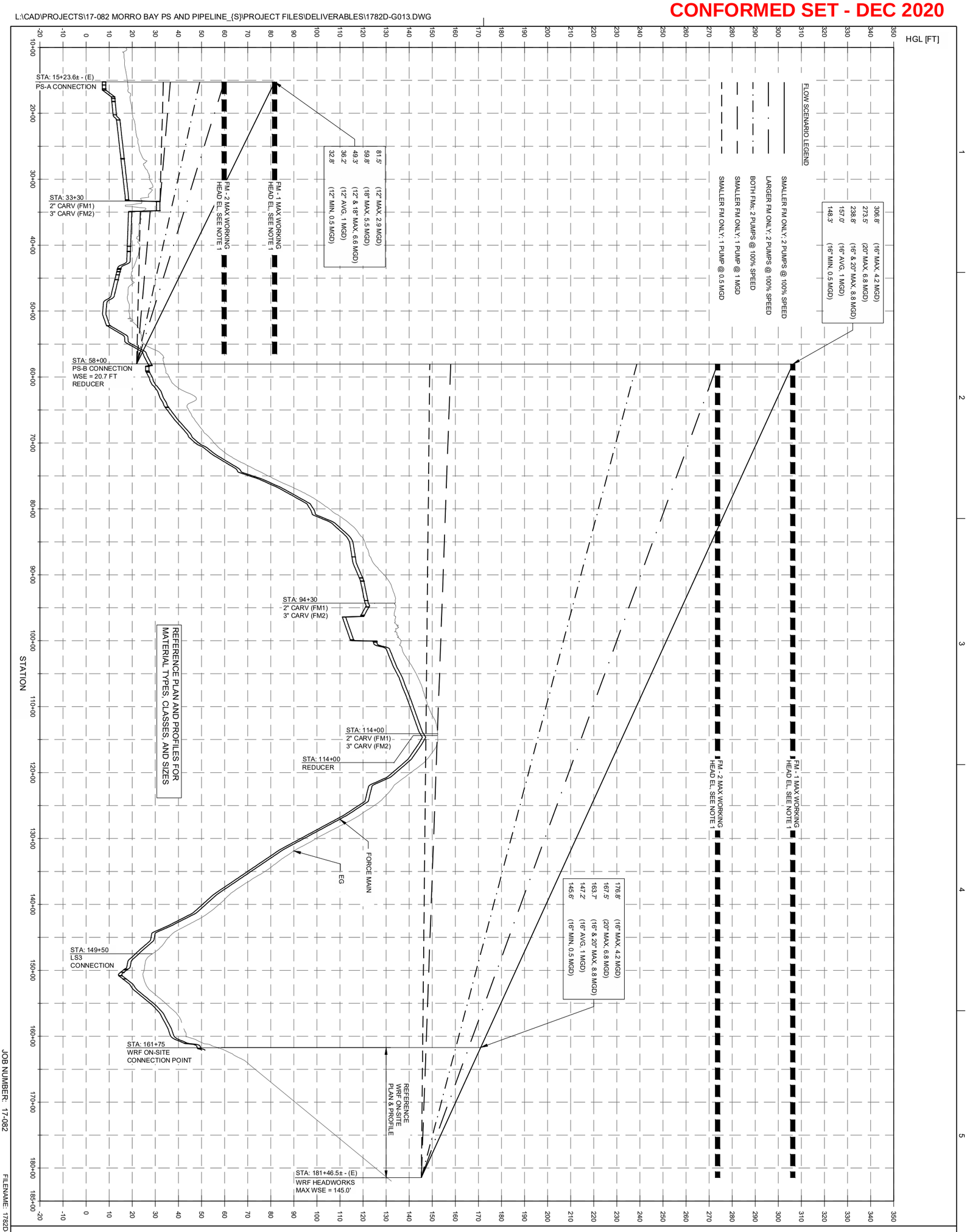

NOTES:

1. USE MAX WORKING HEAD TO CALCULATE FIELD HYDROSTATIC TEST PRESSURE FOR INDIVIDUAL TEST SECTION PURSUANT TO SPEC 15990

JOB NUMBER: 17-082

FILENAME: 1782D-G013.DWG

PLOT DATE: 06/12/20

PLOT TIME: 15:49:39

REGISTERED PROFESSIONAL ENGINEER CIVIL STATE OF CALIFORNIA No. C-71194 05/29/2020

GENERAL FORCE MAIN HYDRAULIC GRADE LINE (HDPE)	CITY OF MORRO BAY WATER RECLAMATION FACILITY LIFT STATION AND OFFSITE PIPELINES	WATERWORKS ENGINEERS 2260 Douglas Blvd, Suite 105 • Roseville, CA 95661 • 916-780-2888	DESIGN M KARBAKHSH DRAWN M TRUITT CHECKED T LEWIS APPROVED M FISHER	
DATE MAY 2020 PROJECT NUMBER 17-082 DRAWING NUMBER G-14 SHEET NUMBER 14				

CONFORMED SET - DEC 2020

FLOW SCENARIO LEGEND

HIGH FLOW: 8.14 MGD

AVG FLOW: 1 MGD

LOW FLOW: 0.3 MGD

NOTES:

1. USE MAX WORKING HEAD TO CALCULATE FIELD HYDROSTATIC TEST PRESSURE FOR INDIVIDUAL TEST SECTION PURSUANT TO SPEC 15990

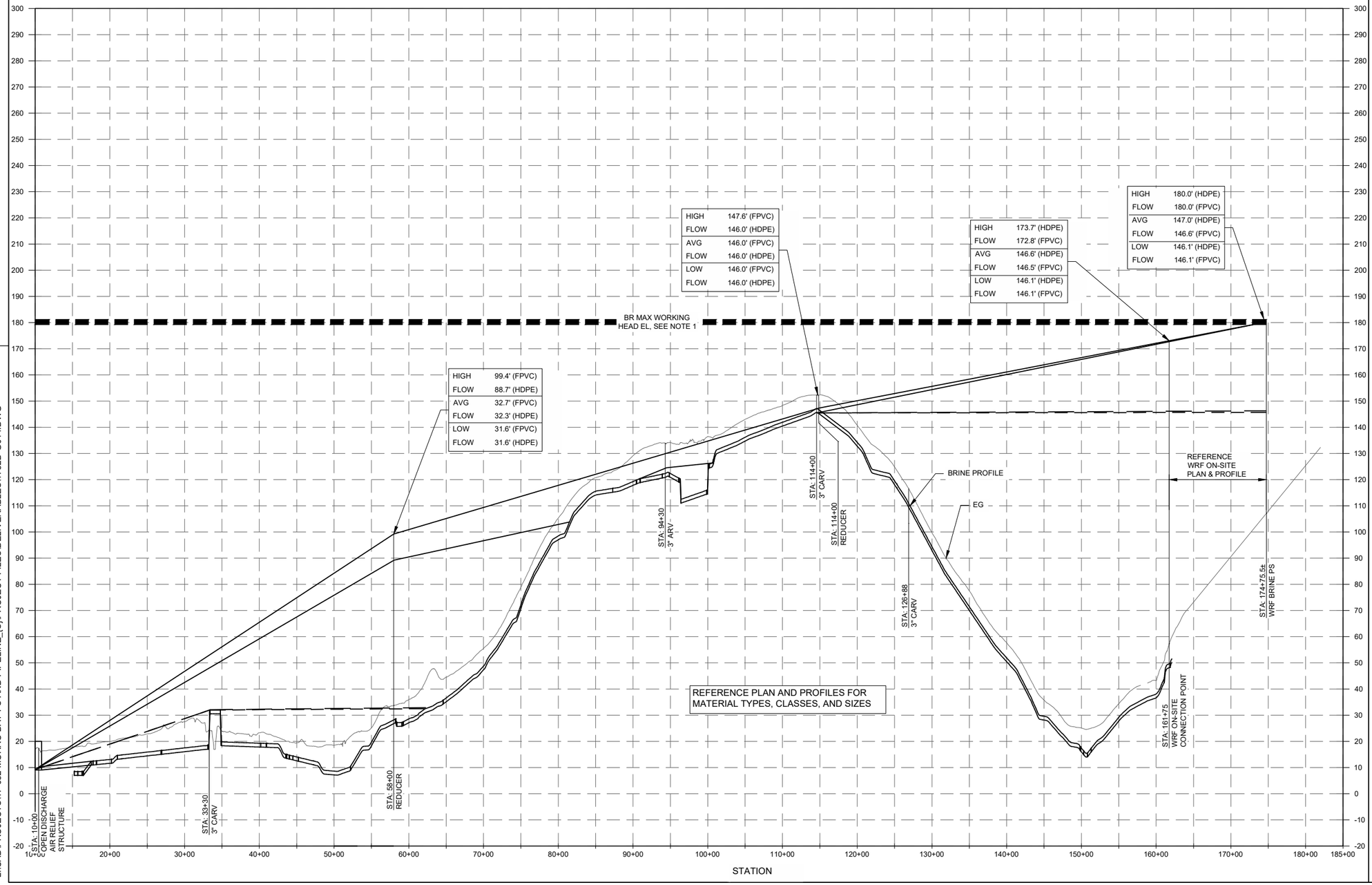

L:\CAD\PROJECTS\17-082 MORRO BAY PS AND PIPELINE_(S)\PROJECT FILES\DELIVERABLES\1782D-G014.DWG

DESIGN M KARBAKHSH
DRAWN M TRUITT
CHECKED T LEWIS
APPROVED M FISHER

WATERWORKS ENGINEERS
2260 Douglas Blvd, Suite 105 • Roseville, CA 95661 • 916-780-2888

CITY OF MORRO BAY
WATER RECLAMATION FACILITY
LIFT STATION AND OFFSITE PIPELINES

GENERAL

BRINE HYDRAULIC GRADE LINE

DATE MAY 2020

PROJECT NUMBER 17-082

DRAWING NUMBER G-15

SHEET NUMBER 15

REGISTERED PROFESSIONAL ENGINEER MICHAEL T. FISHER No. C57194 CIVIL STATE OF CALIFORNIA
05/29/2020

JOB NUMBER: 17-082 FILENAME: 1782D-G014.DWG PLOT DATE: 06/12/20 PLOT TIME: 15:50:02

CONFORMED SET - DEC 2020

FLOW SCENARIO LEGEND

HIGH FLOW: 1.0 MGD

LOW FLOW: 0.3 MGD

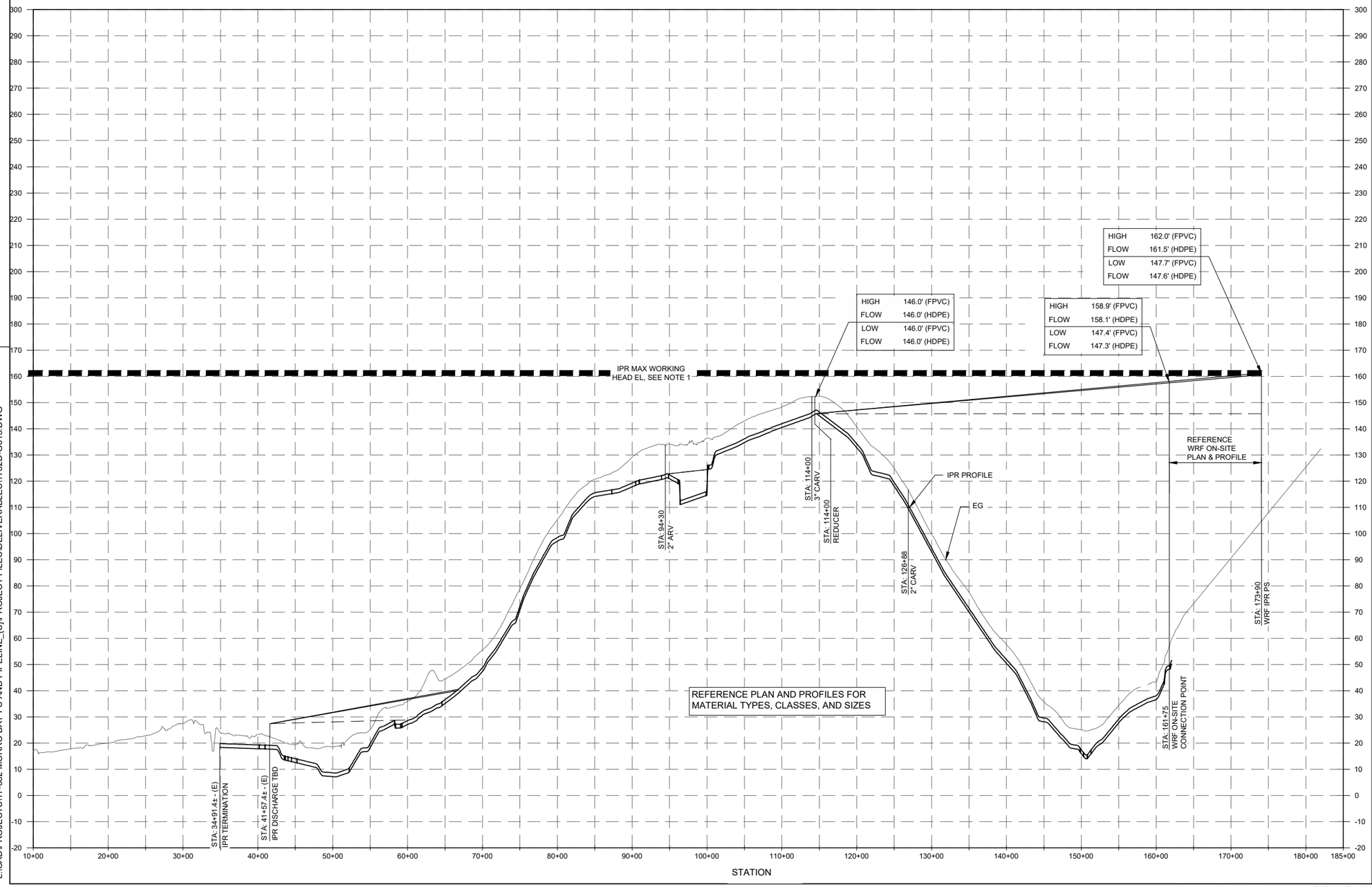

NOTES:

1. USE MAX WORKING HEAD TO CALCULATE FIELD HYDROSTATIC TEST PRESSURE FOR INDIVIDUAL TEST SECTION PURSUANT TO SPEC 15990

DESIGN M KARBAKHSH
DRAWN M TRUITT
CHECKED T LEWIS
APPROVED M FISHER

WATERWORKS ENGINEERS
2260 Douglas Blvd, Suite 105 • Roseville, CA 95661 • 916-780-2888

CITY OF MORRO BAY
WATER RECLAMATION FACILITY
LIFT STATION AND OFFSITE PIPELINES

GENERAL

IPR HYDRAULIC GRADE LINE

REGISTERED PROFESSIONAL ENGINEER
No. C 67194
CIVIL
STATE OF CALIFORNIA
05/29/2020

DATE MAY 2020
PROJECT NUMBER 17-082
DRAWING NUMBER G-16
SHEET NUMBER 16

L:\CAD\PROJECTS\17-082 MORRO BAY PS AND PIPELINE_(S)\PROJECT FILES\DELIVERABLES\1782D-G015.DWG

JOB NUMBER: 17-082 FILENAME: 1782D-G015.DWG PLOT DATE: 06/12/20 PLOT TIME: 15:50:18

CONFORMED SET - DEC 2020

CIVIL GENERAL NOTES

WORK WITHIN STATE R/W SHALL CONFORM WITH CALTRANS STANDARDS, SPECIFICATIONS, AND ENCROACHMENT PERMIT AND POLICY EXCEPTION CONDITIONS. (1)

1. CONTRACTOR RESPONSIBILITY: ALL CONSTRUCTION WORK AND INSTALLATIONS SHALL CONFORM TO THE CITY OF MORRO BAY (OWNER) STANDARDS AND SPECIFICATIONS WHICH ARE SUBJECT TO APPROVAL FROM THE CITY ENGINEER (OWNER). IN ADDITION, ALL WORK SHALL CONFORM WITH THE CONTRACT DOCUMENTS AND COMPLY WITH APPLICABLE STATE, FEDERAL, AND LOCAL CODES. ALL NECESSARY LICENCES AND PERMITS SHALL BE OBTAINED BY THE CONTRACTOR AT NO EXPENSE TO THE OWNER, UNLESS OTHERWISE SPECIFIED IN THE CONTRACT DOCUMENTS.

2. WORK DEVIATION: DEVIATION FROM THESE PLANS WITHOUT THE PRIOR WRITTEN CONSENT OF THE ENGINEER MAY BE CAUSE FOR THE WORK TO BE UNACCEPTABLE. MINOR CHANGES IN THE HORIZONTAL AND VERTICAL ALIGNMENT OF MAIN PIPELINES & YARD PIPING MAY BE PROPOSED BY THE CONTRACTOR AND SUBMITTED TO THE ENGINEER FOR APPROVAL TO FACILITATE CONSTRUCTION AND AVOID FIELD CONFLICTS. THE CONTRACTOR SHALL NOTIFY THE ENGINEER IMMEDIATELY SHOULD ANY FIELD CONDITIONS BE ENCOUNTERED THAT VARY FROM THE INFORMATION PROVIDED IN THE CONTRACT DOCUMENTS.

3. CONTRACT DOCUMENT PRECEDENCE: ORDER OF PRECEDENCE OF CONTRACT DOCUMENTS AND OTHER PROVISIONS ARE LISTED IN VOLUME 1.

4. EXISTING CONDITIONS: EXISTING OR ORIGINAL CONDITION IS DEFINED AS A PRE-CONSTRUCTION CONDITION. IF PROVIDED, AERIAL ORTHO-RECTIFIED PHOTO IMAGERY IN THE BACKGROUND OF A DRAWING IS INTENDED TO CLARIFY THE WORK SITE AT THE TIME OF THE DESIGN. EXISTING CONDITIONS MAY VARY FROM THE CONDITIONS DEPICTED IN THE ORTHO IMAGERY. CONTRACTOR SHALL VERIFY EXISTING SURFACE CONDITIONS WHEN FEASIBLE PRIOR TO BIDDING. THE CONTRACTOR SHALL NOTIFY THE ENGINEER IMMEDIATELY SHOULD ANY FIELD CONDITIONS BE ENCOUNTERED THAT VARY FROM THE INFORMATION PROVIDED IN THE CONTRACT DOCUMENTS.

5. REFERENCE ALIGNMENT & CONSTRUCTION SURVEY: ALL ALIGNMENT LENGTHS AND DISTANCES BETWEEN STRUCTURES ARE MEASURED FROM CENTER OF STRUCTURE TO CENTER OF STRUCTURE ALONG A HORIZONTAL PLANE. ALL EXISTING OR FINISHED GRADE ELEVATIONS DEPICTED IN PROFILE VIEW ARE ELEVATIONS ALONG THE CENTER LINE OF THE REFERENCE ALIGNMENT UNLESS OTHERWISE INDICATED. THE CONTRACTOR SHALL VERIFY ALL DIMENSIONS PRIOR TO STARTING CONSTRUCTION AND SHALL NOTIFY THE ENGINEER TO ANY DISCREPENCIES. A POSITIVE OFFSET STATION IS THE PERPENDICULAR OFFSET DISTANCE TO THE RIGHT OF AN ALIGNMENT IN THE DIRECTION OF THE INCREASING STATION. THE CONTRACTOR SHALL PROVIDE ALL CONSTRUCTION SURVEYING WHICH SHALL BE PERFORMED BY A LICENSED SURVEYOR.

6. TYPICAL DETAILS AND TRENCH DETAIL CONTINUITY: TYPICAL DETAILS AND SCHEDULES INDICATED MAY NOT BE SPECIFICALLY REFERENCED ON THE PLANS. THE CONTRACTOR IS RESPONSIBLE TO DETERMINE WHERE EACH TYPICAL DETAIL OR SCHEDULE APPLIES. THE ENGINEER SHALL BE NOTIFIED IF LOCATIONS ARE FOUND WHERE NO TYPICAL DETAIL, SCHEDULE, OR SPECIFIC DETAIL APPLIES. THE CONTRACTOR SHALL ADAPT AND TRANSITION BETWEEN CONTINUOUS TRENCH DETAILS BASED ON PLAN AND PROFILE.

7. PRESERVATION OF PROPERTY: PRIVATE AND PUBLIC PROPERTY SHALL BE PROTECTED DURING CONSTRUCTION AND IF DAMAGED DURING EXECUTION OF WORK SHALL BE REPLACED AND/OR RESTORED TO MATCH EXISTING CONDITIONS OR UPDATED STANDARDS IF REQUIRED BY THE OWNER.

8. CONCRETE FLATWORK REPLACEMENT: ALL TRAFFIC ISLANDS, CURBS, CONCRETE DRIVEWAYS AND SIDEWALKS EXCAVATED OR DAMAGED DURING EXECUTION OF WORK SHALL BE REPLACED TO THE FIRST EXPANSION JOINT BEYOND THE TRENCH AND TO THE FULL WIDTH AND SHALL MATCH EXISTING CONDITIONS OR UPDATED STANDARDS IF REQUIRED BY THE OWNER. UNLESS OTHERWISE DIRECTED, ADA-ACCESSIBILITY CURB RAMPS SHALL BE REPLACED IN FULL TO THEIR FUNCTIONAL LIMITS AND MODIFIED TO COMPLY WITH OWNER STANDARD DETAILS.

9. MONUMENT CONSERVATION: PRIOR TO COMMENCEMENT OF WORK, ALL SURVEY MONUMENTS IN THE PROJECT AREA SHALL BE LOCATED AND TIED OUT. ALL CENTERLINE MONUMENTS OR TIES LOST OR DESTROYED BY THIS WORK SHALL BE REPLACED EITHER BY A LICENSED SURVEYOR OR A CIVIL ENGINEER REGISTERED PRIOR TO JANUARY 1, 1982 AND NEW TIE SHEETS PROVIDED. METHOD OF ESTABLISHMENT SHALL BE STATED ON THE TIE SHEET.

10. SALVAGING OWNER EQUIPMENT & DEBRIS DISPOSAL: SALVAGED OWNER EQUIPMENT SUCH AS METERS, VALVES, AND HYDRANTS SHALL BE RETURNED TO THE OWNER AT THE PROJECT CONCLUSION OR UPON REQUEST. NO SALVAGED ITEMS SHALL BE RE-INCORPORATED INTO THE NEW WORK, UNLESS OTHERWISE DIRECTED. ALL CONSTRUCTION DEBRIS, UNSUITABLE AND SURPLUS MATERIAL, AND CLEARED/GRUBBED VEGETATIVE MATERIAL SHALL BECOME THE PROPERTY OF THE CONTRACTOR AND REMOVED FROM THE SITE UNLESS OTHERWISE DIRECTED BY THE OWNER.

11. PIPELINE PROTECTION FROM DEBRIS: THE CONTRACTOR SHALL PREVENT ACCUMULATION OF DEBRIS OR SOILS WITHIN NEW PIPELINES DURING INSTALLATION AND SHALL PLUG THE ENDS OF PIPELINES WITH APPROVED PLUGS AT THE END OF THE DAY. USE OF A PIPELINE DURING CONSTRUCTION TO STORE OR CONVEY SCREENED DEWATERED GROUNDWATER OR ACCUMULATED STORM RUNOFF IS ONLY PERMISSIBLE FOR PIPELINES INTENDEDNON-POTABLE SERVICE WITH PRIOR APPROVAL FROM ENGINEER. AFTER FINAL ACCEPTANCE, USE OF ANY PIPELINE FOR PURPOSES OTHER THAN START-UP AND OPERATION ARE RESTRICTED UNLESS APPROVED BY THE OWNER.

12. EXISTING UTILITIES: THE CONTRACTOR IS REQUIRED TO CONTACT UNDERGROUND SERVICE ALERT TWO (2) TO FOURTEEN (14) DAYS PRIOR TO BEGINNING ANY EXCAVATION. THE LOCATIONS OF EXISTING UTILITIES SHOWN ON THE PLANS ARE BASED ON AVAILABLE RECORDS, ARE APPROXIMATE, AND ARE DEPICTED FOR THE CONTRACTOR'S CONVENIENCE. THE ENGINEER ASSUMES NO RESPONSIBILITY FOR THE COMPLETENESS AND ACCURACY OF UTILITIES SHOWN. THE CONTRACTOR SHALL NOTE THAT SMALL-DIAMETER IRRIGATION PIPELINES ARE NOT DEPICTED HEREIN. IT IS THE RESPONSIBILITY OF THE CONTRACTOR TO DETERMINE THE SIZE, DEPTH, ORIENTATION, MATERIAL, AND LOCATION OF ALL EXISTING UNDERGROUND UTILITIES WITHIN WORK AREAS PRIOR TO CONSTRUCTION AND SUBMIT THIS INFORMATION TO THE ENGINEER IF IT DEVIATES FROM THE PROJECT PLANS. THE CONTRACTOR SHALL PROVIDE FOR THE PROTECTION OF EXISTING UTILITIES AND REPAIR OR REPLACE UTILITIES THAT ARE DAMAGED BY THE CONTRACTOR AT NO EXPENSE TO THE OWNER. THE CONTRACTOR SHALL MAKE SUCH REPAIRS OR REPLACEMENTS TO A SATISFACTORY CONDITION THAT MEETS THE CURRENT UTILITY COMPANY STANDARD. THE CONTRACTOR SHALL COORDINATE WORK WITH CONFLICTING UTILITY OWNERS AND PROVIDE FOR REMOVAL, RELOCATION, AND REPLACEMENT AS NECESSARY FOR INSTALLATION OF THE PROPOSED FACILITIES AT NO EXPENSE TO THE OWNER

13. UTILITY VERIFICATION REQUIREMENTS: CONTRACTOR SHALL DEVELOP AND SUBMIT TO THE ENGINEER FOR APPROVAL A UTILITY VERIFICATION PLAN WITHIN 30 DAYS OF PROJECT COMMENCEMENT. THE PLAN SHALL DESCRIBE THE PROPOSED VERIFICATION METHODOLOGY, BACKFILL AND/OR TEMPORARY PAVEMENT REPLACEMENT PROCEDURES, IMPLEMENTATION SCHEDULE, AND TRAFFIC CONTROL PLAN. ACCEPTABLE VERIFICATION METHODOLOGIES ARE NON-MECHANICAL VACUUM POTHOLING AND HAND EXCAVATION THAT EXPOSE THE UTILITY FOR VISUAL CONFIRMATION AND ALLOW FOR DOCUMENTATION WITH PHOTO/VIDEO AND SURVEY. MECHANICAL EXPLORATORY TRENCHING SHALL ONLY BE APPROVED IN SPECIAL CIRCUMSTANCES WHERE IT BENEFITS THE OWNER AND PROJECT SCHEDULE AND MAY BE SUBJECT TO CULTURAL MONITORING PROCEDURES. CITY-OWNED GRAVITY UTILITIES SUCH AS SERVICE LATERALS MAY REQUIRE CCTV CONFIRMATION OF HORIZONTAL PLACEMENT PRIOR TO UTILITY VERIFICATION.

    THE ENGINEER HAS DELINEATED "HIGH PRIORITY UTILITY VERIFICATION REQUIRED" FOR PARTICULAR UTILITIES THAT ARE IMPACTFUL TO THE PROPOSED WORK AND PROJECT SCHEDULE. THE CONTRACTOR SHALL VERIFY THE HIGH PRIORITY UTILITY AND SURVEY IT WITHIN 60 DAYS OF PROJECT COMMENCEMENT AND SUBMIT RESULTS TO ENGINEER.

    THE CONTRACTOR SHALL VERIFY ADDITIONAL UTILITIES MARKED BY THE LOCATING COMPANY AND/OR SHOWN IN CONFORMED DRAWINGS WITHIN 3.0-LF OF THE EXCAVATION LIMITS A MINIMUM OF 2 WEEKS PRIOR TO EXCAVATON AND WITHIN 200-LF OF THE ADVANCING LINEAR CONSTRUCTION ACTIVITY

14. TIE-IN CONNECTIONS: OPERATION OF ANY EXISTING WATER SYSTEM VALVES OR EXISTING FACILITIES SHALL ONLY OCCUR UNDER THE DIRECT OBSERVATION AND PRIOR APPROVAL OF THE OWNER. THE CONTRACTOR SHALL NOTIFY THE OWNER AT LEAST TWO (2) WEEKS IN ADVANCE OF ANY NECESSARY SHUTDOWN AND/OR TIE-IN CONNECTION AND EACH INDIVIDUAL EVENT SHALL BE IDENTIFIED ON CONTRACTOR'S THREE (3) WEEK LOOK AHEAD SHCEDULE AS SUBMITTED WEEKLY TO THE OWNER. SHUTDOWNS AND TIE-INS MAY NOT OCCUR ON THE WEEKEND OR HOLIDAYS UNLESS PRE-APPROVED BY THE OWNER. CONTRACTOR SHALL COMPLETE TIE-INS IN THE SHORTEST POSSIBLE TIME AND IN NO CASE SHALL ANY CUSTOMER BE WITHOUT WATER SERVICE FOR MORE THAN AN 8-HR PERIOD; ONCE SHUTDOWN OCCURS AND WORK ON THE TIE-IN BEGINS, THE CONTRACTOR SHALL NOT STOP WORK UNTIL TIE-IN IS COMPLETED AND WATER SERVICE IS RESTORED TO CUSTOMER(S). ALL PREPARATORY WORK SHALL BE COMPLETED TO THE SATISFATION OF THE OWNER PRIOR TO INITITATING SHUTDOWN AND STARTING WORK ON THE TIE-IN. CONTRACTOR SHALL VERIFY CONNECTION POINTS AND PIPE MATERIAL IN ADVANCE AND HAVE ALL PIPE, FITTINGS, VALVES, HARDWARE, GASKETS AND OTHER MATERIALS READY ON-SITE INCLUDING DISINFECTION MATERIALS. THE CONTRACTOR MAY SUBMIT FOR APPROVAL THE ADDITION OF WATER MAIN LINE VALVES AT TIE IN LOCATIONS SO AS IT REDUCES SHUTDOWN IMPACTS AT NO ADDITIONAL COST TO THE OWNER. THE CONTRACTOR SHALL COMPLY WITH OWNER STANDARDS, POTABLE WATER DISINFECTION REQUIREMENTS, AND WASTEWATER DISPOSAL REQUIREMENTS.

15. SHUTDOWNS: THE CONTRACTOR SHALL NOT CAUSE ANY SERVICE INTERRUPTIONS WITHOUT PRIOR OWNER APPROVAL AND SHALL MAKE EVERY EFFORT TO MINIMIZE LENGTH OF ANY NECESSARY WATER AND SEWER SERVICE INTERRUPTIONS. ANY AND EACH SHUTDOWN SHALL BE INDIVIDUALLY PLANNED AND SCHEDULES AT LEAST TWO (2) WEEKS IN ADVANCE OF WORK.

16. POTABLE WATER BYPASSING: THE CONTRACTOR SHALL SUBMIT A POTABLE WATER BYPASSING PLAN TO ENGINEER FOR APPROVAL. AT A MINIMUM THIS PLAN SHALL INCLUDE THE PROPOSED PIPELINE SIZE AND MATERIAL, ALIGNMENT, ISOLATION VALVING, AIR RELIEF SYSTEM, PLACEMENT, RESTRAINT SYSTEM, PROTECTION AGAINST VEHICLE STRIKES, AND TEMPORARY FIRE HYDRANT CONNECTION (IF REQUIRED BY CITY). PLACEMENT OF BYPASS PIPING WITHIN GUTTER LINES THAT MAY LEAD TO PARTIAL INUNDATION FROM NON-POTABLE STORM RUNOFF SHALL REQUIRE APPROVAL FROM DDW. THE CONTRACTOR SHALL INCLUDE COSTS FOR SUBMITTAL REVISIONS INCORPORATING DDW COMMENTS AND SHALL INCORPORATE 15 DAYS FOR DDW REVIEW. THE CONTRACTOR SHALL COMPLY OWNER STANDARDS AND POTABLE WATER DISINFECTION REQUIREMENTS.

17. RECORD DRAWINGS: PRIOR TO BACKFILLING THE CARRIER (OR CASING, IF ENCASED) THE CONTRACTOR SHALL SURVEY THE CL @ CROWN OF EVERY PIPELINE FITTING, HORIZONTAL AND VERTICAL ELBOWS, AND EVERY 50-FT THROUGH A HORIZONTAL CURVE. IN ADDITION, THE CONTRACTOR SHALL SURVEY THE GEOMETRIC CENTER @ FG OF ALL INSTALLED STRUCTURES SUCH AS BUT NOT LIMITED TO MANHOLES, VALVE VAULTS/BOXES, PULLBOXES, TRACER WIRE TERMINALS, AND GROUND ROD TERMINALS. IT IS THE CONTRACTOR'S RESPONSIBILITY TO MAINTAIN AND SUBMIT TO THE ENGINEER A SET OF RECORD DRAWINGS IN ACCORDANCE WITH SECTION 01330 AND SECTION 01800.

18. ASBESTOS CEMENT PIPE REMOVAL: IT IS THE RESPONSIBILITY OF A CERTIFIED CONTRACTOR TO REMOVE, DISPOSE AND HANDLE ASBESTOS MATERIALS, IN CONFORMANCE WITH SECTION 25914.1 OF THE STATE HEALTH AND SAFETY CODE, NATIONAL EMISSION STANDARD FOR HAZARDOUS AIR POLLUTANTS (40CFR61, SUBPART M-ASBESTOS NESHAP) AND IN ACCORDANCE WITH SLO-APCD REQUIREMENTS. ASBESTOS CEMENT PIPE (ACP) OR "TRANSITE" SHALL BE SEVERED WITH A SPECIALIZED SNAP-CUT DEVICE TO REDUCE RISK OF FRYING THE MATERIAL OR EXTRACTED AT THE CLOSEST PIPE JOINT. SEVERED ACP PIPE ENDS SHALL BE SECURELY WRAPPED AND THE WHOLE PIPE BAGGED IN PREPARATION FOR TRANSPORT AND DISPOSAL AT AN APPROVED FACILITY.

19. PROJECT BACKGROUND DOCUMENTATION: THE CONTRACTOR SHALL FAMILIARIZE THEMSELVES WITH THE FOLLOWING PROJECT BACKGROUND DOCUMENTATION:
    - APPENDIX A: GEOTECHNICAL INVESTIGATION REPORT AND LOG OF BORINGS (YEH & ASSOCIATES APRIL 2020).
    - APPENDIX B: DRAFT EIR, FINAL EIR, ADDENDUM, AND USFWS BIOLOGICAL OPINION (1)
    - APPENDIX C: TRENCHLESS GEOTECHNICAL AND ENGINEERING DESIGN RECOMMENDATION TECHNICAL MEMORANDUM (DCM CONSULTING, APRIL 2020)

CONSTRUCTION WORK PLANS

1. THE CONTRACTOR SHALL DEVELOP, SUBMIT TO ENGINEER FOR APPROVAL, AND IMPLEMENT ALL WORK PLANS REQUIRED BY THE CONTRACT DOCUMENTS. PROJECT CONSTRUCTION WORK PLANS MAY INCLUDE BUT ARE NOT LIMITED TO THE FOLLOWING ITEMS, WHICH HAVE BEEN DELINEATED FOR THE CONTRACTOR'S CONVENIENCE.

	MAJOR CONSTRUCTION WORK PLANS	REFERENCE
1.	CONSTRUCTION NOISE REDUCTION PLAN	OWNER SHALL DEVELOP PRIOR TO NTP
2.	PROJECT PUBLIC COMMUNICATION PLAN	
3.	TRAFFIC CONTROL PLAN	TRAFFIC CONTROL DWGS
4.	UTILITY SHUTDOWN PLAN	SEE NOTE 15
5.	SITE ACCESS, STAGING, SAFETY & SECURITY PLAN	01500
6.	SHEETING & SHORING PLAN	02300
7	UTILITY VERIFICATION PLAN	SEE NOTE 13
8.	SEWER BYPASSING PLAN	011550
9.	POTABLE WATER BYPASSING PLAN	SEE NOTE 17
10.	SANITARY SEWER OVERFLOW AND EMERGENCY RESPONSE PLAN (SS OERP)	01140
11.	DEWATERING PLAN	01140
12.	SOIL TESTING QUALITY CONTROL PLAN	02300
13.	GRAVITY AND PRESSURE NON-POTABLE PIPELINE TESTING & INSPECTION PLAN	01725
14.	POTABLE WATER DISINFECTION, TESTING, AND INSPECTION PLAN	15995 & 15990
15	START-UP PLAN & PROCEDURES FOR PUMP STATION(S) AND PIPELINE(S)	01750 & 01800

REGISTERED PROFESSIONAL ENGINEER MICHAEL J. FISHER No. C67194 CIVIL STATE OF CALIFORNIA
05-29-2020

DESIGNED T LEWIS
DRAWN B TROTTER
CHECKED T LEWIS
APPROVED M FISHER

WATERWORKS ENGINEERS
2260 Douglas Blvd., Suite 105 • Roseville, CA 95661 • 916-780-2888

CITY OF MORRO BAY
WATER RECLAMATION FACILITY LIFT STATIONS AND OFFSITE PIPELINES

GENERAL
CIVIL GENERAL NOTES

DATE MAY 2020
PROJECT NUMBER 17-082
DRAWING NUMBER G-17
SHEET NUMBER 17

CONFORMED SET - DEC 2020

REGULATORY PERMIT COMPLIANCE

1. THE CONTRACTOR SHALL PROVIDE ALL LABOR, EQUIPMENT, AND MATERIALS TO COMPLY WITH REGULATORY PERMITTING PROVISIONS. APPLICABLE REGULATORY PERMITS MAY INCLUDE BUT ARE NOT LIMITED TO THE FOLLOWING ITEMS, WHICH HAVE BEEN DELINEATED FOR THE CONTRACTOR'S CONVENIENCE. THE CONTRACTOR SHALL SECURE SAID PERMITS WHERE DELINEATED AS RESPONSIBLE PARTY.

PERMITTING ENTITY	PERMIT TITLE	RESPONSIBLE PARTY
CITY OF MORRO BAY	ENCROACHMENT PERMIT	CONTRACTOR SHALL SECURE PERMIT AND COMPLY WITH PROVISIONS.
	BUSINESS PERMIT	
CAL/OSHA DIR	*(ALL APPLICABLE PERMITS)*	
SLO CO. APCD	FUGITIVE DUST CONTROL	
	ASBESTOS DEMOLITION & DISPOSAL	
RWQCB R3	CONSTRUCTION STORM WATER GENERAL PERMIT - SWPPP	
	LOW THREAT DISCHARGE PERMIT & MRP	
CALTRANS D5	ENCROACHMENT PERMIT	OWNER SHALL DEVELOP AND SUBMIT SELECT PORTIONS FOR DESIGN REVIEW PRIOR TO NTP. CONTRACTOR SHALL SECURE DOUPLE-PERMIT AND COMPLY WITH PROVISIONS.
RWQCB DDW D6	POTABLE WATER VERTICAL & HORIZONTAL SEPARATION REQUIREMENTS AND PROJECT SPECIFIC WAIVERS	OWNER SHALL SECURE PERMIT PRIOR TO NTP. CONTRACTOR SHALL COMPLY WITH PROVISIONS.
CDFW	1602 STREAMBED ALTERATION AGREEMENT	
~~USACE~~	~~404 CWA~~	
~~RWQCB~~	~~401 CWA~~	
CCC	COASTAL DEVELOPMENT PERMIT	

1

ENVIRONMENTAL MITIGATION MEASURES

1. THE CONTRACTOR SHALL PROVIDE ALL LABOR, EQUIPMENT AND MATERIALS TO COMPLY WITH APPLICABLE PROVISIONS LISTED IN THE CEQA ENVIRONMENTAL IMPACT REPORT (EIR) ADOPTED FOR THIS PROJECT (APPENDIX B). THE OWNER WILL RETAIN A QUALIFIED BIRD SPECIALIST, BIOLOGIST. ARCHAEOLOGIST, NATIVE AMERICAN MONITOR, AND OTHER QUALIFIED INDIVIDUALS AS NEEDED TO ASSIST IN CONDUCTING ENVIRONMENTAL SURVEYS AND FIELD MONITORING. MITIGATION MEASURES ARE LISTED IN DETAIL IN APPENDIX B OF THE CONTRACT DOCUMENTS. MITIGATION MEASURES INCLUDE BUT ARE NOT LIMITED TO THE FOLLOWING ITEMS, WHICH HAVE BEEN CONDENSED FROM APPENDIX B AT THE TIME OF ISSUANCE FOR THE CONTRACTOR'S CONVENIENCE. ACTUAL MITIGATION MEASURE PROVISIONS MAY VARY.

1 AND THE USFWS BIOLOGICAL OPINION

TITLE	CONDENSED MITIGATION MEASURE SUMMARY
CUL-6	CONSTRUCTION WORKER CULTURAL RESOURCES SENSITIVITY TRAINING
CUL-7	ALL PROJECT RELATED GROUND DISTURBANCE SHALL BE MONITORED BY AN ARCHAEOLOGICAL MONITOR WHO SHALL HAVE THE AUTHORITY TO HALT CONSTRUCTION ACTIVITIES IN CLOSE PROXIMITY IN THE EVENT OF A DISCOVERY
CUL-8	ALL PROJECT RELATED GROUND DISTURBANCE SHALL BE MONITORED BY A NATIVE AMERICAN MONITOR WHO SHALL HAVE THE AUTHORITY TO HALT CONSTRUCTION ACTIVITIES IN CLOSE PROXIMITY IN THE EVENT OF A DISCOVERY
CUL-9	IN THE EVENT ARCHEAOLOGICAL RESOURCES ARE ENCOUNTERED DURING CONSTRUCTION, ALL ACTIVITY IN THE VICINITY OF THE FIND SHALL CEASE WITHIN 100 FEET AND THE PROJECT CRMPP SHALL BE IMPLEMENTED.
CUL-14	IN THE EVENT HUMAN REMAINS ARE ENCOUNTERED DURING CONSTRUCTION, THEN WORK SHALL BE HALTED WITHIN 100-FT OF THE DISCOVERY AND THE CONTRACTOR SHALL CONTACT THE COUNTY SHERRIFF-CORONER AT (805) 781-4540, PROJECT ARCHAEOLOGIST, AND OWNER. THE CONTRACTOR SHALL ADEQUATELY PROTECT THE SITE IN THE IMMEDIATE VICINITY OF THE DISCOVERY BASED ON RECOMMENDATIONS FROM THE ARCHEOLOGIST.
AES-1	LIGHTING SHALL BE SHIELDED AND POINTED AWAY FROM LIGHT SENSITIVE LAND USES DURING NIGHTIME
AQ-1A	IMPLEMENT FUGITIVE DUST CONTROL MEASURES IN ACCORDANCE WITH SLO APCD PERMIT
AQ-1B	IMPLEMENT STANDARD MITIGATION MEASURES FOR REDUCING EMISSIONS FROM CONSTRUCTION EQUIPMENT
AQ-1C	IMPLEMENT BEST AVAILABLE CONTROL TECHNOLOGY (BACT) FOR DIESEL-FUELED CONSTRUCTION EQUIPMENT
BIO-01	CONSTRUCTION WORKER ENVIRONMENTAL AWARENESS TRAINING AND EDUCATION PROGRAM BY PROJECT BIOLOGIST
BIO-02	THE CONTRACTOR SHALL IMPLEMENT BIOLOGICAL RESOURCES GENERAL AVOIDANCE AND PROTECTIVE MEASURES
BIO-03	THE PROJECT BIOLOGIST WILL DELINEATE MORRO SHOULDERBAND SNAIL (MSS) SENSITIVE HABITATS IN THE FIELD PRIOR TO CONSTRUCTION AND THE CONTRACTOR SHALL INSTALL SILT FENCING ALONG THE BOUNDARY DELINEATED. ADDITIONAL ENVIRONMENTAL TRAINING FROM THE PROJECT BIOLOGIST WILL BE REQUIRED FOR CONSTRUCTION WORKERS ADJACENT TO MSS HABITAT AREAS.
BIO-05	IMPLEMENT MITIGATION MEASURES RECOMMENDED TO AVOID OR MINIMIZE IMPACTS TO NESTING BIRD SPECIES
BIO-06	THE PROJECT BIOLOGIST WILL DELINEATE RIPARIAN HABITATS PRIOR TO CONSTRUCTION AND THE CONTRACTOR SHALL INSTALL A 3-FT CONSTRUCTION ACCESS BUFFER SAFETY FENCE ALONG THE PERIMETER DELINEATED.
BIO-08	THE CONTRACTOR SHALL IMPLEMENT AQUATIC HABITAT AVOIDANCE MEASURES IN CONJUNCTION WITH THE PROJECT SWPPP AND DEVELOP AN EROSION CONTROL PLAN AND SPILL PREVENTION PLAN
BIO-10	TREES NOT MARKED FOR REMOVAL OR TRIMMING AND IN CLOSE PROXIMITY TO CONSTRUCTION ACTIVITY LIMITS SHALL BE PROTECTED
CUL-11	THE PROJECT PALEONTOLOGIST SHALL CONDUCT PRE-CONSTRUCTION PALEONTOLOGICAL RESOURCES WORKER SENSITIVITY TRAINING
CUL-12	ALL GROUND DISTURBANCE IN EXCESS OF 5 FEET WITHIN SENSITIVE AREAS SHALL BE MONITORED ON A FULL TIME BASIS DURING THE EXCAVATION BY THE PROJECT PALEONTOLOGIST
CUL-13	IN THE EVENT PALEONTOLOGICAL RESOURCES SUCH AS FOSSILS ARE ENCOUNTERED DURING CONSTRUCTION, ALL ACTIVITY IN THE VICINITY OF THE FIND SHALL CEASE WITHIN 50 FEET AND THE PROJECT PALEONTOLOGIST SHALL BE CONTACTED. CONSTRUCTION MAY RESUME AFTER THE DISCOVERY IS EVALUATED AND RECOMMENDATIONS ARE IMPLEMENTED BY THE PROJECT PAELEONTOLOGIST
GEO-2	EROSION CONTROL: ALL SITES DISTURBED BY CONSTRUCTION ACTIVITY SHALL BE MANAGED TO CONTROL EROSION AND HYDROSEEDED PURSUANT TO THE PROJECT SWPPP
NOISE-1	NOISE REDUCTION PLAN: THE CONTRACTOR SHALL IMPLEMENT THE CITY-PREPARED CONSTRUCTION NOISE REDUCTION PLAN
USFWS	BIOLOGICAL OPINION (SEE APPENDIX B)

1

DESIGNED T LEWIS
DRAWN B TROTTER
CHECKED T LEWIS
APPROVED M FISHER

WATERWORKS ENGINEERS
2290 Douglas Blvd., Suite 105 • Roseville, CA 95661 • 916-780-2888

CITY OF MORRO BAY
WATER RECLAMATION FACILITY
LIFT STATIONS AND OFFSITE PIPELINES

GENERAL
PERMITTING GENERAL NOTES

REGISTERED PROFESSIONAL ENGINEER
No. 67194
CIVIL
STATE OF CALIFORNIA
05-29-2020

DATE MAY 2020
PROJECT NUMBER 17-082
DRAWING NUMBER G-18
SHEET NUMBER 18

FILENAME: 1782D-G018.dgn PLOT DATE: 5/23/2020 9:53:25 AM

L:\CAD\PROJECTS\17-082 MORRO BAY PS AND PIPELINE_{S}\PROJECT FILES\DELIVERABLES\1782D-05C101.DWG

CONFORMED SET - DEC 2020



NOTES:

1. SEVERAL POTENTIAL LAY DOWN / STAGING AREAS ARE LISTED IN THE ADDENDUM TO THE FINAL EIR (APPENDIX B). IT IS THE RESPONSIBILITY OF THE CONTRACTOR TO SECURE ADDITIONAL STAGING AREAS FROM PRIVATE PROPERTY OWNERS UNLESS OTHERWISE NOTED. THE CONTRACTOR MAY SUBMIT FOR APPROVAL ADDITIONAL LAY DOWN / STAGING AREAS WITHIN CITY ROW BUT LONG TERM USE OF THESE AREAS ARE NOT GUARANTEED AND SHALL BE SUBJECT TO APPROVAL BY THE CITY ENGINEER. CITY ENCROACHMENT PERMIT AND TRAFFIC CIRCULATION CONSTRAINTS

HORIZ SCALE 1"=200'

200 0 200 400 FEET

CIVIL

PROJECT OVER VIEW AND KEY MAP 1

CITY OF MORRO BAY

WATER RECLAMATION FACILITY
LIFT STATION AND OFFSITE PIPELINES

WATERWORKS ENGINEERS

2260 Douglas Blvd, Suite 105 • Roseville, CA 95661 • 916-780-2888

DESIGN	P WEBSTER
DRAWN	P WEBSTER
CHECKED	T LEWIS
APPROVED	M FISHER

DATE	MAY 2020
PROJECT NUMBER	17-082
DRAWING NUMBER	05-C-1
SHEET NUMBER	19

JOB NUMBER: 17-082

FILENAME: 1782D-05C101.DWG

PLOT DATE: 06/11/20

PLOT TIME: 09:35:11

CONFORMED SET - DEC 2020



NOTES:

1. SEVERAL POTENTIAL LAY DOWN / STAGING AREAS ARE LISTED IN THE ADDENDUM TO THE FINAL EIR (APPENDIX B). IT IS THE RESPONSIBILITY OF THE CONTRACTOR TO SECURE ADDITIONAL STAGING AREAS FROM PRIVATE PROPERTY OWNERS UNLESS OTHERWISE NOTED. THE CONTRACTOR MAY SUBMIT FOR APPROVAL ADDITIONAL LAY DOWN / STAGING AREAS WITHIN CITY ROW BUT LONG TERM USE OF THESE AREAS ARE NOT GUARANTEED AND SHALL BE SUBJECT TO PREVIOUSLY APPROVED CITY ENCROACHMENT PERMIT AND TRAFFIC CIRCULATION CONSTRAINTS.

HORIZ SCALE 1"=200'

200 0 200 400 FEET

CIVIL

PROJECT OVER VIEW AND KEY MAP 1

CITY OF MORRO BAY

WATER RECLAMATION FACILITY
LIFT STATION AND OFFSITE PIPELINES

WATERWORKS ENGINEERS

2260 Douglas Blvd, Suite 105 • Roseville, CA 95661 • 916-780-2888

DESIGN	P WEBSTER
DRAWN	P WEBSTER
CHECKED	T LEWIS
APPROVED	M FISHER

DATE	MAY 2020
PROJECT NUMBER	17-082
DRAWING NUMBER	05-C-1
SHEET NUMBER	19

JOB NUMBER: 17-082
FILENAME: 1782D-05C101.DWG
PLOT DATE: 06/11/20
PLOT TIME: 09:35:11

L:\CAD\PROJECTS\17-082 MORRO BAY PS AND PIPELINE_{S}\PROJECT FILES\DELIVERABLES\1782D-05C102.DWG

CONFORMED SET - DEC 2020



NOTES:

1. SEVERAL POTENTIAL LAY DOWN / STAGING AREAS ARE LISTED IN THE ADDENDUM TO THE FINAL EIR (APPENDIX B). IT IS THE RESPONSIBILITY OF THE CONTRACTOR TO SECURE LAY DOWN / STAGING AREAS FROM PRIVATE PROPERTY OWNERS UNLESS OTHERWISE NOTED. THE CONTRACTOR MAY SUBMIT FOR APPROVAL ADDITIONAL LAY DOWN / STAGING AREAS WITHIN CITY ROW BUT LONG TERM USE OF THESE AREAS ARE NOT GUARANTEED AND SHALL BE SUBJECT TO PERIODIC REVIEW AND APPROVED CITY ENCROACHMENT PERMIT AND TRAFFIC CIRCULATION CONSTRAINTS

HORIZ SCALE 1"=200'

200 0 200 400 FEET

REGISTERED PROFESSIONAL ENGINEER
TIMOTHY LEWIS
No. 021744
CIVIL
STATE OF CALIFORNIA
06/26/2020

CIVIL

PROJECT OVERVIEW AND KEY MAP 2

CITY OF MORRO BAY

WATER RECLAMATION FACILITY
LIFT STATION AND OFFSITE PIPELINES

WATERWORKS ENGINEERS
2260 Douglas Blvd, Suite 105 •Roseville, CA 95661 • 916-780-2888

DESIGN	P WEBSTER
DRAWN	P WEBSTER
CHECKED	T LEWIS
APPROVED	M FISHER

DATE	MAY 2020
PROJECT NUMBER	17-082
DRAWING NUMBER	05-C-2
SHEET NUMBER	20

JOB NUMBER: 17-082

FILENAME: 1782D-05C102.DWG

PLOT DATE: 06/11/20

PLOT TIME: 09:36:14

CONFORMED SET - DEC 2020



NOTES:

1. SEVERAL POTENTIAL LAY DOWN / STAGING AREAS ARE LISTED IN THE ADDENDUM TO THE FINAL EIR (APPENDIX B). IT IS THE RESPONSIBILITY OF THE CONTRACTOR TO SECURE LAY DOWN / STAGING AREAS FROM PRIVATE PROPERTY OWNERS UNLESS OTHERWISE NOTED. THE CONTRACTOR MAY SUBMIT FOR APPROVAL ADDITIONAL LAY DOWN / STAGING AREAS WITHIN CITY ROW BUT LONG TERM USE OF THESE AREAS ARE NOT GUARANTEED AND SHALL BE SUBJECT TO PERMIT APPROVED BY THE CITY ENCROACHMENT PERMIT AND TRAFFIC CIRCULATION CONSTRAINTS.

HORIZ SCALE 1"=200'

200 0 200 400 FEET

REGISTERED PROFESSIONAL ENGINEER
M. FISHER
No. 081748
CIVIL
STATE OF CALIFORNIA
06/30/2020

CIVIL

PROJECT OVERVIEW AND KEY MAP 3

CITY OF MORRO BAY

WATER RECLAMATION FACILITY
LIFT STATION AND OFFSITE PIPELINES

WATERWORKS ENGINEERS
2260 Douglas Blvd, Suite 105 • Roseville, CA 95661 • 916-780-2888

DESIGN	P WEBSTER
DRAWN	P WEBSTER
CHECKED	T LEWIS
APPROVED	M FISHER

DATE	MAY 2020
PROJECT NUMBER	17-082
DRAWING NUMBER	05-C-3
SHEET NUMBER	21

JOB NUMBER: 17-082
FILENAME: 1782D-05C103.DWG
PLOT DATE: 06/11/20
PLOT TIME: 09:37:15

CONFORMED SET - DEC 2020

CONTROL POINT LISTING

HORZ: CCS83 ZONE 5, CSRS EPOCH 2017.50 U.S. SURVEY FEET
VERT: NAVD88, U.S. SURVEY FEET

POINT	NORTHING	EASTING	ELEVATION	NOTES
P067	2400480.6413	5668473.9994	466.2	CSRS–CGPS
P523	2309260.6568	5708341.8829	252.7	CSRS–CGPS
P525	2352963.5604	5725124.1289	1005.4	CSRS–CGPS
USLO	2310304.7127	5767821.1155	556.6	CSRS–CGPS
2	2337580.2452	5708954.0743	17.93	MAG NAIL & PAINTED TARGET
3	2337709.2821	5710736.3614	70.53	MAG NAIL & PAINTED TARGET
13	2330099.9168	5719451.3161	25.54	MAG NAIL & PAINTED TARGET
14	2331349.6124	5720139.4048	71.71	1" I.P. WITH CAP "PRAXIS CONTROL"
15	2328654.9669	5711650.3489	11.23	1" I.P. WITH CAP "PRAXIS CONTROL"
16	2333213.9272	5707678.6646	15.88	1" I.P. WITH CAP "PRAXIS CONTROL"
1	2335632.260	5708644.543	19.89	MAG NAIL & PAINTED TARGET
4	2335990.088	5710886.979	28.79	MAG NAIL & PAINTED TARGET
5	2336241.418	5709882.010	20.50	MAG NAIL & PAINTED TARGET
6	2334941.073	5711010.008	20.85	MAG NAIL ON BIKE LANE STRIPE
7	2333124.056	5710475.809	15.17	MAG NAIL & PAINTED TARGET
8	2333764.028	5712066.537	39.65	MAG NAIL & PAINTED TARGET
9	2333939.395	5713409.568	145.95	MAG NAIL & PAINTED TARGET
10	2332331.739	5713337.597	115.08	MAG NAIL & PAINTED TARGET
11	2333170.002	5715521.133	177.63	SPIKE & PLASTIC TARGET
12	2331196.514	5716204.563	165.16	MAG NAIL & PAINTED TARGET

STATEMENT OF PURPOSE

THIS SURVEY WAS PERFORMED IN CONNECTION WITH THE WATER RECLAMATION FACILITY (WRF) OFFSITE PIPELINE PROJECT TO:

- ESTABLISH PRIMARY CONTROL FOR THE PROJECT
- ESTABLISH AERIAL MAPPING GROUND CONTROL (TARGETS)

ADDITIONAL SURVEYS FOR SECONDARY SURVEY CONTROL (USED AS THE BASIS FOR BOUNDARY AND RIGHT OF WAY LINES AND ENGINEERING DESIGN SURVEYS ALONG THE PIPELINE ROUTE) ARE NOT DOCUMENTED ON THIS MAP. THE SECONDARY SURVEY CONTROL WAS ESTABLISHED WITH A COMBINATION OF CONVENTIONAL (TOTAL STATION) AND HIGH PRODUCTION GNSS (RTK) EQUIPMENT AND METHODS.

SUMMARY OF SURVEY

1. PRIMARY CONTROL NETWORK SURVEY WAS PERFORMED USING STATIC GNSS TO ESTABLISH SIX PRIMARY CONTROL STATIONS AT THE EXTENTS OF THE PROJECT AREA RELATED TO THE CALIFORNIA SPATIAL REFERENCE SYSTEM (CSRS). FOUR OF THESE STATIONS ALSO SERVED AS AERIAL MAPPING GROUND CONTROL TARGETS.

2. AERIAL MAPPING GROUND CONTROL SURVEY WAS PERFORMED USING RTK GNSS TO ESTABLISH TEN ADDITIONAL AERIAL MAPPING GROUND CONTROL TARGETS.

3. THE PRIMARY CONTROL NETWORK WAS PLANNED, AND THE DATA PROCESSED IN THE OFFICE BY GUIDA SURVEYING AS A SUBCONSULTANT TO PRAXIS LAND SURVEYING. THE AERIAL MAPPING GROUND CONTROL WAS PLANNED, AND THE DATA PROCESSED IN THE OFFICE BY PRAXIS. PRAXIS PERFORMED ALL FIELD SURVEYS FOR BOTH THE PRIMARY CONTROL NETWORK AND THE AERIAL MAPPING GROUND CONTROL. ALL ADDITIONAL SURVEYS FOR SECONDARY SURVEY CONTROL WERE ALSO PERFORMED BY PRAXIS.

BASIS OF CONTROL AND DATUM NOTES

1. COORDINATES ARE REFERENCED TO THE CALIFORNIA COORDINATE SYSTEM (CCS83) ZONE 5 GRID, CSRS EPOCH 2017.50 [NAD83 (2011), EPOCH 2017.50], DEFINED LOCALLY BY CSRS STATIONS "P067", "P523", "P525", AND "USLO", THE LATITUDE AND LONGITUDE OF WHICH WERE HELD FIXED IN A SEPARATE LEAST SQUARES ADJUSTMENT TO DETERMINE HORIZONTAL POSITIONS OF PRIMARY CONTROL. COORDINATES ARE EXPRESSED IN U.S. SURVEY FEET. HTTP://SOPAC-CSRC.UCSD.EDU/INDEX.PHP/EPOCH2017/

2. ELEVATIONS ARE REFERENCED TO THE NORTH AMERICAN VERTICAL DATUM OF 1988 (NAVD88) DEFINED LOCALLY BY BENCHMARK "J693 RESET" (NGS PID FV1098), THE TRANSFERRED ELEVATION OF WHICH WAS HELD FIXED IN A SEPARATE LEAST SQUARES ADJUSTMENT TO DETERMINE ELEVATIONS OF PRIMARY CONTROL. (A LEVELING SURVEY WAS RUN BETWEEN J693 AND PRIMARY CONTROL STATION 13.) THE ELEVATIONS OF THE OTHER FIVE PRIMARY CONTROL STATIONS WERE DETERMINED USING GEOID HEIGHTS INTERPOLATED FROM THE NGS GEOID12B GEOID MODEL. ELEVATIONS ARE EXPRESSED IN U.S. SURVEY FEET.

   a. THE PUBLISHED ELEVATION OF J693 RESET IS GIVEN AS 151.79 FEET ON THE CURRENT NGS DATASHEET.

   b. TO CHECK THE NAVD88 CONNECTION, A LEVELING SURVEY WAS RUN BETWEEN BENCHMARK "P1314" (NGS PID FV1102) AND AERIAL MAPPING GROUND CONTROL STATION 8 AND ALSO BETWEEN BENCHMARK "Q1314" (NGS PID FV1103) AND PRIMARY CONTROL STATION 3.

   c. THE NAD88 LEAST SQUARES ADJUSTMENT INCLUDES THE LEVELED ELEVATION OF STATION 3, AS WELL AS THE PUBLISHED NAVD88 ELEVATION OF USLO IN THE DAT FILE, ALONG WITH THE LEVELED ELEVATION OF STATION 13. THE LST FILE SHOWS THAT ELEVATIONS AT 3 AND USLO CHANGE BY −0.35 FEET AND −0.41 FEET, RESPECTIVELY. THE ELEVATION AT STATION 8 DETERMINED BY RTK CHANGES BY −0.31 FEET. HOLDING THE ELEVATION AT STATION 13 (LEVELED FROM J693) CAUSES THREE OTHER NAVD88 ELEVATIONS TO SHIFT BY ABOUT 0.35 FEET. THE PROJECT IS ONLY NOMINALLY REFERENCED TO THE NAVD88 DATUM.

   d. THE ELEVATION OF J693 WAS HELD BECAUSE IT WAS USED AS THE BASIS OF ELEVATIONS FOR TOPOGRAPHIC MAPPING OF WRF SITE. THE DESIGN TEAMS FOR THE WRF SITE AND THE OFFSITE PIPELINE MUTUALLY AGREED THAT IT MADE SENSE TO AVOID INCONSISTENT ELEVATIONS BETWEEN THE ONSITE AND OFFSITE COMPONENTS OF THE OVERALL WRF PROJECT.

ACCURACY STATEMENT

1. THE PRIMARY CONTROL NETWORK SURVEY WAS NOT PERFORMED ACCORDING TO ANY PUBLISHED SPECIFICATIONS. THE CONTROL STATIONS TO WHICH THIS SURVEY IS REFERENCED MEET THE REQUIREMENTS FOR INCLUSION IN THE CSRS AS DEFINED IN THE PUBLIC RESOURCES CODE.

2. THE PRIMARY CONTROL NETWORK SURVEY WAS PERFORMED USING STATIC GNSS EQUIPMENT AND METHODS (TRIMBLE R8). GNSS OBSERVATION DATA WAS PROCESSED USING TRIMBLE BUSINESS CENTER V4 SOFTWARE AND ADJUSTED BY THE LEAST SQUARES METHOD USING STAR*NET V8.2 SOFTWARE. THE POSITIONS AND ELEVATIONS HELD FIXED IN THE FINAL CONSTRAINED ADJUSTMENT ARE AS LISTED IN THE BASIS OF CONTROL AND DATUM NOTES. THE RESULTANT CCS83 ZONE 3 COORDINATES ACHIEVE A 0.5 CM LOCAL ACCURACY AT THE 95% CONFIDENCE LEVEL. THE RESULTANT NAVD88 ELEVATIONS ACHIEVE A 1CM LOCAL ACCURACY AT THE 95% CONFIDENCE LEVEL.

3. THE AERIAL MAPPING GROUND CONTROL SURVEY WAS PERFORMED USING RTK GNSS (BASE AND ROVER WITH RADIO) EQUIPMENT AND METHODS (TRIMBLE R8). THE RTK SURVEY BEGAN WITH CHECKING INTO FIVE OF THE SIX PRIMARY CONTROL STATIONS (STATION 13 WAS NOT INCLUDED BECAUSE OF RADIO INTERFERENCE) AND COMPARING THE RTK COORDINATES AND ELEVATIONS AGAINST THE STAR*NET ADJUSTED COORDINATES AND ELEVATIONS. EACH TARGET WAS THEN OCCUPIED TWICE, SEPARATED BY 6 HOURS. RESULTANT COORDINATES AND ELEVATIONS OF THE TWO OCCUPATIONS VARIED BY 0.01 TO 0.06 FEET WHICH WERE AVERAGED FOR FINAL POSITION.

CSRS TIES DIAGRAM

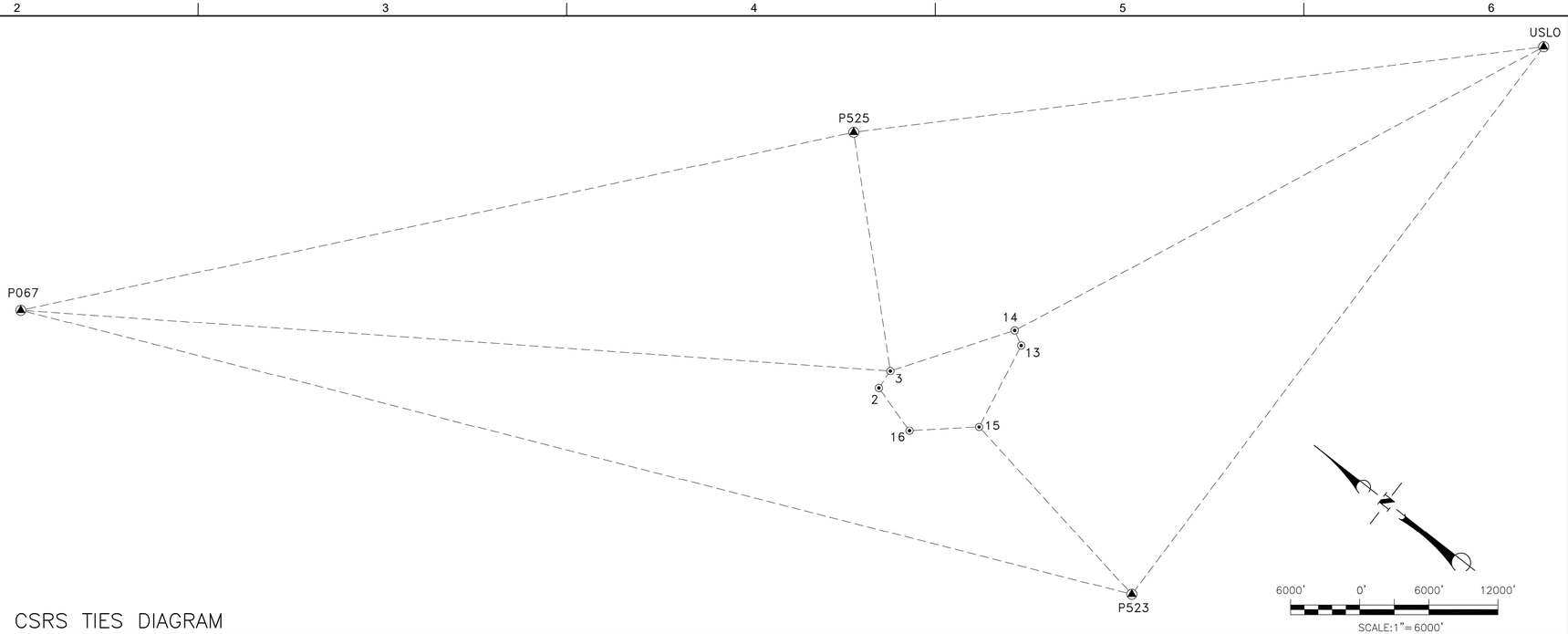

PROJECT AREA DIAGRAM



REGISTERED PROFESSIONAL ENGINEER
MICHAEL J. GRIFFIN
No. C61794
CIVIL
STATE OF CALIFORNIA
05/29/2020

DESIGN	P WEBSTER
DRAWN	P WEBSTER
CHECKED	T LEWIS
APPROVED	M FISHER

WATERWORKS ENGINEERS
2260 Douglas Blvd, Suite 105 • Roseville, CA 95661 • 916-780-2888

CITY OF MORRO BAY
WATER RECLAMATION FACILITY
LIFT STATION AND OFFSITE PIPELINES

CIVIL
HORIZONTAL CONTROL PLAN

DATE	MAY 2020
PROJECT NUMBER	17-082
DRAWING NUMBER	05-C-4
SHEET NUMBER	22

L:\CAD\PROJECTS\17-082 MORRO BAY PS AND PIPELINE_(S)\PROJECT FILES\DELIVERABLES\1782D-05C104.DWG

JOB NUMBER: 17-082 FILENAME: 1782D-05C104.DWG PLOT DATE: 06/11/20 PLOT TIME: 09:37:32

CONFORMED SET - DEC 2020

FM2 ALIGNMENT LINE TABLE

LINE	LENGTH	DIRECTION	START (N,E)	END (N,E)	START (STA)	END (STA)
L1	130.87	N6° 49' 42.69"W	5708858.90,2336561.65	5708843.34,2336691.59	9+50.00	10+80.87
L2	15.36	N38° 10' 17.31"E	5708843.34,2336691.59	5708852.83,2336703.67	10+80.87	10+96.23
L3	531.54	N82° 48' 52.95"E	5708852.83,2336703.67	5709380.20,2336770.15	10+96.23	16+27.77
L4	18.59	N37° 16' 17.31"E	5709380.20,2336770.15	5709391.45,2336784.94	16+27.77	16+46.36
L5	104.00	N82° 03' 18.29"E	5709391.45,2336784.94	5709494.45,2336799.32	16+46.36	17+50.36
L6	24.75	N37° 33' 03.75"E	5709494.45,2336799.32	5709509.54,2336818.94	17+50.36	17+75.10
L7	15.32	N82° 57' 07.63"E	5709509.54,2336818.94	5709524.75,2336820.82	17+75.10	17+90.43
L8	10.98	N85° 10' 17.31"E	5709544.01,2336822.82	5709554.94,2336823.74	18+09.79	18+20.77
L9	201.24	S84° 04' 42.69"E	5709554.94,2336823.74	5709755.11,2336802.98	18+20.77	20+22.01
L10	78.48	S61° 04' 42.69"E	5709755.11,2336802.98	5709823.80,2336765.03	20+22.01	21+00.48
L11	54.88	S83° 03' 04.83"E	5709823.80,2336765.03	5709878.28,2336758.39	21+00.48	21+55.37
L12	132.47	S82° 55' 27.98"E	5709967.65,2336743.26	5710099.11,2336726.94	22+46.04	23+78.51
L13	123.35	S80° 48' 57.05"E	5710281.26,2336700.92	5710403.03,2336681.24	25+62.52	26+85.88
L14	7.57	S57° 48' 57.05"E	5710403.03,2336681.24	5710409.44,2336677.20	26+85.88	26+93.45
L15	74.83	S12° 24' 25.18"E	5710409.44,2336677.20	5710425.52,2336604.12	26+93.45	27+68.27
L16	139.62	S15° 49' 16.07"E	5710467.87,2336445.97	5710505.94,2336311.64	29+32.08	30+71.69
L17	133.65	S5° 17' 20.36"E	5710522.75,2336221.41	5710535.07,2336088.33	31+63.60	32+97.25
L18	246.43	S17° 17' 21.48"E	5710535.07,2336088.33	5710608.31,2335853.03	32+97.25	35+43.68
L19	77.43	S22° 54' 22.12"E	5710625.14,2335807.02	5710655.28,2335735.70	35+92.70	36+70.13
L20	152.29	S18° 24' 22.12"E	5710669.13,2335698.96	5710717.22,2335554.47	37+09.40	38+61.69
L21	116.59	S21° 37' 42.35"E	5710726.84,2335528.05	5710769.81,2335419.67	38+89.81	40+06.40
L22	77.49	S44° 07' 42.35"E	5710769.81,2335419.67	5710823.76,2335364.05	40+06.40	40+83.88
L23	45.46	S21° 37' 42.35"E	5710823.76,2335364.05	5710840.52,2335321.79	40+83.88	41+29.34
L24	63.81	S27° 24' 53.22"E	5710861.47,2335275.87	5710890.85,2335219.23	41+79.83	42+43.64
L25	33.61	S19° 51' 19.72"E	5710917.27,2335158.84	5710928.69,2335127.22	43+09.61	43+43.22
L26	14.46	S31° 06' 19.72"E	5710928.69,2335127.22	5710936.16,2335114.84	43+43.22	43+57.68
L27	34.89	S42° 21' 19.72"E	5710936.16,2335114.84	5710959.67,2335089.06	43+57.68	43+92.57
L28	47.73	S30° 45' 59.41"E	5710959.67,2335089.06	5710984.08,2335048.04	43+92.57	44+40.31
L29	73.19	S8° 15' 59.41"E	5710984.08,2335048.04	5710994.61,2334975.61	44+40.31	45+13.50
L30	199.44	S30° 36' 18.83"E	5710994.61,2334975.61	5711096.14,2334803.96	45+13.50	47+12.93
L31	208.34	S25° 28' 17.06"E	5711117.20,2334764.43	5711206.80,2334576.34	47+57.74	49+66.08
L32	168.70	S34° 12' 34.05"E	5711244.70,2334510.26	5711339.55,2334370.75	50+42.33	52+11.03
L33	27.28	S45° 57' 34.05"E	5711339.55,2334370.75	5711359.16,2334351.78	52+11.03	52+38.31
L34	353.85	S43° 57' 41.27"E	5711438.50,2334280.20	5711684.13,2334025.49	53+45.23	56+99.08
L35	137.32	S36° 46' 22.71"E	5711724.74,2333977.73	5711806.94,2333867.73	57+61.81	58+99.13
L36	23.44	S81° 46' 22.71"E	5711806.94,2333867.73	5711830.15,2333864.38	58+99.13	59+22.58
L37	93.70	S36° 58' 40.48"E	5711830.15,2333864.38	5711886.51,2333789.53	59+22.58	60+16.27
L38	90.97	S50° 12' 13.68"E	5711965.91,2333706.12	5712035.81,2333647.89	61+31.69	62+22.67
L39	38.98	S49° 01' 05.38"E	5712161.97,2333538.43	5712191.40,2333512.87	63+89.85	64+28.83
L40	654.40	S71° 24' 38.05"E	5712191.40,2333512.87	5712811.66,2333304.25	64+28.83	70+83.24
L41	474.93	S60° 50' 33.70"E	5712980.08,2333229.71	5713394.83,2332998.32	72+67.68	77+42.61
L42	600.09	S53° 13' 49.59"E	5713506.22,2332926.09	5713986.92,2332566.88	78+75.47	84+75.56
L43	163.83	S50° 00' 09.56"E	5714031.08,2332531.90	5714156.58,2332426.60	85+31.89	86+95.72
L44	48.12	S27° 30' 09.56"E	5714156.58,2332426.60	5714178.80,2332383.92	86+95.72	87+43.84
L45	193.67	S18° 39' 23.38"E	5714209.03,2332312.97	5714270.99,2332129.48	88+21.04	90+14.71
L46	48.27	S29° 54' 23.38"E	5714270.99,2332129.48	5714295.06,2332087.63	90+14.71	90+62.98
L47	5.71	S41° 09' 23.38"E	5714295.06,2332087.63	5714298.81,2332083.33	90+62.98	90+68.69
L48	232.93	S47° 29' 46.85"E	5714337.45,2332043.77	5714509.18,2331886.40	91+24.02	93+56.95
L49	89.94	S70° 29' 46.85"E	5714509.18,2331886.40	5714593.95,2331856.37	93+56.95	94+46.88
L50	129.13	S48° 38' 52.30"E	5714593.95,2331856.37	5714690.89,2331771.06	94+46.88	95+76.02
L51	372.78	S60° 14' 05.75"E	5714690.89,2331771.06	5715014.48,2331585.99	95+76.02	99+48.79
L52	33.92	N74° 45' 54.25"E	5715014.48,2331585.99	5715047.21,2331594.90	99+48.79	99+82.71
L53	50.20	N29° 15' 54.25"E	5715047.21,2331594.90	5715071.75,2331638.70	99+82.71	100+32.92
L54	12.76	N51° 15' 54.25"E	5715071.75,2331638.70	5715081.70,2331646.68	100+32.92	100+45.67
L55	484.27	S84° 01' 53.25"E	5715081.70,2331646.68	5715563.35,2331596.33	100+45.67	105+29.95
L56	153.34	S82° 12' 57.27"E	5715594.81,2331592.53	5715746.73,2331571.77	105+61.63	107+14.97
L57	1024.00	S75° 46' 40.97"E	5715856.97,2331550.33	5716849.59,2331298.75	108+27.33	118+51.34
L58	265.14	S76° 22' 57.64"E	5716849.59,2331298.75	5717107.28,2331236.33	118+51.34	121+16.48
L59	378.41	S75° 48' 24.26"E	5717107.28,2331236.33	5717474.14,2331143.55	121+16.48	124+94.89
L60	372.51	S78° 46' 44.98"E	5717654.28,2331102.93	5718019.67,2331030.44	126+79.58	130+52.08

FM2 ALIGNMENT LINE TABLE

LINE	LENGTH	DIRECTION	START (N,E)	END (N,E)	START (STA)	END (STA)
L61	578.82	S72° 59' 36.50"E	5718068.61,2331018.13	5718622.13,2330848.84	131+02.57	136+81.39
L62	408.72	S51° 32' 56.45"E	5718786.81,2330762.27	5719106.89,2330508.11	138+68.53	142+77.25
L63	149.33	S35° 50' 12.25"E	5719201.31,2330409.28	5719288.74,2330288.22	144+14.37	145+63.70
L64	261.71	S50° 52' 49.79"E	5719378.62,2330193.04	5719581.66,2330027.92	146+94.98	149+56.69
L65	39.91	S62° 18' 05.26"E	5719581.66,2330027.92	5719617.00,2330009.37	149+56.69	149+96.61
L66	52.07	S84° 48' 05.26"E	5719617.00,2330009.37	5719668.86,2330004.65	149+96.61	150+48.68
L67	48.73	N50° 11' 54.74"E	5719668.86,2330004.65	5719706.30,2330035.84	150+48.68	150+97.41
L68	284.92	N27° 41' 54.74"E	5719706.30,2330035.84	5719838.74,2330288.11	150+97.41	153+82.33
L69	337.55	N12° 54' 02.15"E	5719883.41,2330408.89	5719958.78,2330737.93	155+11.47	158+49.02
L70	52.39	N14° 41' 00.34"E	5719966.19,2330768.14	5719979.47,2330818.83	158+80.14	159+32.53
L71	64.51	N5° 47' 32.05"E	5719993.25,2330895.11	5719999.76,2330959.28	160+10.12	160+74.63
L72	81.50	N26° 47' 34.14"E	5719999.76,2330959.28	5720036.50,2331032.04	160+74.63	161+56.13
L73	25.25	N14° 56' 30.66"E	5720036.50,2331032.04	5720043.01,2331056.43	161+56.13	161+81.38

FM2 ALIGNMENT CURVE TABLE

CURVE	RADIUS	LENGTH	CHORD DIRECTION	START (N,E)	END (N,E)	START (STA)	END (STA)
C1	500.0	19.37	N84° 03' 42.47"E	5709524.75,2336820.82	5709544.01,2336822.82	17+90.43	18+09.79
C2	500.0	45.89	S80° 25' 19.23"E	5709878.28,2336758.39	5709923.51,2336750.76	21+55.37	22+01.26
C3	500.0	44.78	S80° 21' 30.80"E	5709923.51,2336750.76	5709967.65,2336743.26	22+01.26	22+46.04
C4	5000.0	184.01	S81° 52' 12.51"E	5710099.11,2336726.94	5710281.26,2336700.92	23+78.51	25+62.52
C5	750.0	76.62	S15° 20' 00.91"E	5710425.52,2336604.12	5710445.77,2336530.26	27+68.27	28+44.89
C6	500.0	54.23	S15° 09' 10.17"E	5710445.77,2336530.26	5710459.94,2336477.94	28+44.89	28+99.13
C7	500.0	32.95	S13° 55' 59.88"E	5710459.94,2336477.94	5710467.87,2336445.97	28+99.13	29+32.08
C8	500.0	91.91	S10° 33' 18.21"E	5710505.94,2336311.64	5710522.75,2336221.41	30+71.69	31+63.60
C9	500.0	49.02	S20° 05' 51.80"E	5710608.31,2335853.03	5710625.14,2335807.02	35+43.68	35+92.70
C10	500.0	39.27	S20° 39' 22.12"E	5710655.28,2335735.70	5710669.13,2335698.96	36+70.13	37+09.40
C11	500.0	28.12	S20° 01' 02.24"E	5710717.22,2335554.47	5710726.84,2335528.05	38+61.69	38+89.81
C12	500.0	50.50	S24° 31' 17.79"E	5710840.52,2335321.79	5710861.47,2335275.87	41+29.34	41+79.83
C13	500.0	65.97	S23° 38' 06.47"E	5710890.85,2335219.23	5710917.27,2335158.84	42+43.64	43+09.61
C14	500.0	44.80	S28° 02' 17.95"E	5711096.14,2334803.96	5711117.20,2334764.43	47+12.93	47+57.74
C15	500.0	76.25	S29° 50' 25.55"E	5711206.80,2334576.34	5711244.70,2334510.26	49+66.08	50+42.33
C16	500.0	44.74	S48° 31' 22.85"E	5711359.16,2334351.78	5711392.67,2334322.16	52+38.31	52+83.05
C17	500.0	62.18	S47° 31' 26.45"E	5711392.67,2334322.16	5711438.50,2334280.20	52+83.05	53+45.23
C18	500.0	62.73	S40° 22' 01.99"E	5711684.13,2334025.49	5711724.74,2333977.73	56+99.08	57+61.81
C19	500.0	115.42	S43° 35' 27.08"E	5711886.51,2333789.53	5711965.91,2333706.12	60+16.27	61+31.69
C20	500.0	49.56	S47° 21' 52.09"E	5712035.81,2333647.89	5712072.25,2333614.34	62+22.67	62+72.22
C21	500.0	78.42	S49° 01' 05.38"E	5712072.25,2333614.34	5712131.39,2333562.96	62+72.22	63+50.64
C22	500.0	39.21	S51° 15' 52.82"E	5712131.39,2333562.96	5712161.97,2333538.43	63+50.64	63+89.85
C23	1000.0	184.44	S66° 07' 35.88"E	5712811.66,2333304.25	5712980.08,2333229.71	70+83.24	72+67.68
C24	1000.0	132.86	S57° 02' 11.65"E	5713394.83,2332998.32	5713506.22,2332926.09	77+42.61	78+75.47
C25	1000.0	56.34	S51° 36' 59.57"E	5713986.92,2332566.88	5714031.08,2332531.90	84+75.56	85+31.89
C26	500.0	77.20	S23° 04' 46.47"E	5714178.80,2332383.92	5714209.03,2332312.97	87+43.84	88+21.04
C27	500.0	55.33	S44° 19' 35.12"E	5714298.81,2332083.33	5714337.45,2332043.77	90+68.69	91+24.02
C28	1000.0	31.69	S83° 07' 25.26"E	5715563.35,2331596.33	5715594.81,2331592.53	105+29.95	105+61.63
C29	1000.0	112.36	S78° 59' 49.12"E	5715746.73,2331571.77	5715856.97,2331550.33	107+14.97	108+27.33
C30	3560.0	184.69	S77° 17' 34.62"E	5717474.14,2331143.55	5717654.28,2331102.93	124+94.89	126+79.58
C31	500.0	50.49	S75° 53' 10.74"E	5718019.67,2331030.44	5718068.61,2331018.13	130+52.08	131+02.57
C32	500.0	187.14	S62° 16' 16.48"E	5718622.13,2330848.84	5718786.81,2330762.27	136+81.39	138+68.53
C33	500.0	137.12	S43° 41' 34.35"E	5719106.89,2330508.11	5719201.31,2330409.28	142+77.25	144+14.37
C34	500.0	131.28	S43° 21' 31.02"E	5719288.74,2330288.22	5719378.62,2330193.04	145+63.70	146+94.98
C35	500.0	129.14	N20° 17' 58.44"E	5719838.74,2330288.11	5719883.41,2330408.89	153+82.33	155+11.47
C36	1000.0	31.12	N13° 47' 31.24"E	5719958.78,2330737.93	5719966.19,2330768.14	158+49.02	158+80.14
C37	500.0	77.59	N10° 14' 16.20"E	5719979.47,2330818.83	5719993.25,2330895.11	159+32.53	160+10.12

L:\CAD\PROJECTS\17-082 MORRO BAY PS AND PIPELINE_{S}\PROJECT FILES\DELIVERABLES\1782D-05C105.DWG

DESIGN P WEBSTER
DRAWN P WEBSTER
CHECKED T LEWIS
APPROVED M FISHER

WATERWORKS
E N G I N E E R S
2260 Douglas Blvd, Suite 105 •Roseville, CA 95661 • 916-780-2888

CITY OF MORRO BAY
WATER RECLAMATION FACILITY
LIFT STATION AND OFFSITE
PIPELINES

CIVIL
ALIGNMENT TABLES

REGISTERED PROFESSIONAL ENGINEER
MICHAEL J FISHER
No. C67194
CIVIL
STATE OF CALIFORNIA
05/29/2020

DATE MAY 2020
PROJECT NUMBER 17-082
DRAWING NUMBER 05-C-5
SHEET NUMBER 23

JOB NUMBER: 17-082 FILENAME: 1782D-05C105.DWG PLOT DATE: 06/11/20 PLOT TIME: 10:00:57

CONFORMED SET - DEC 2020

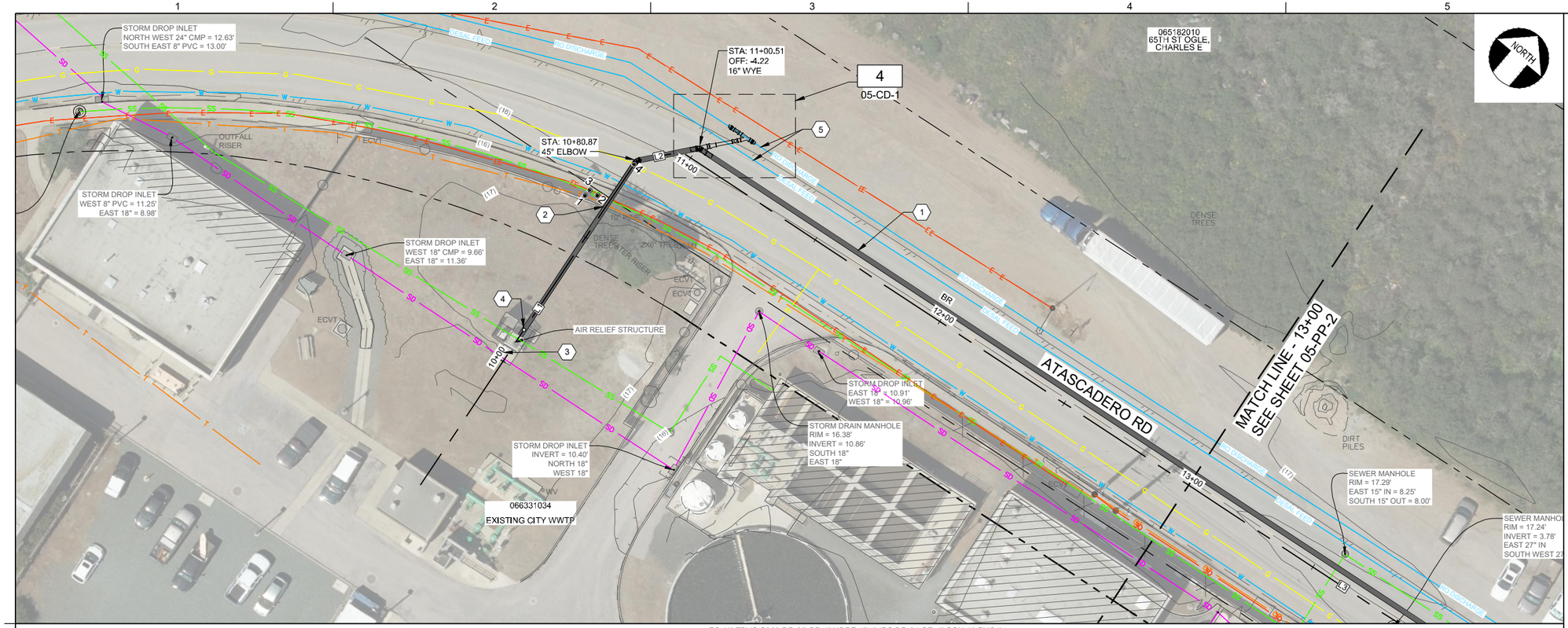

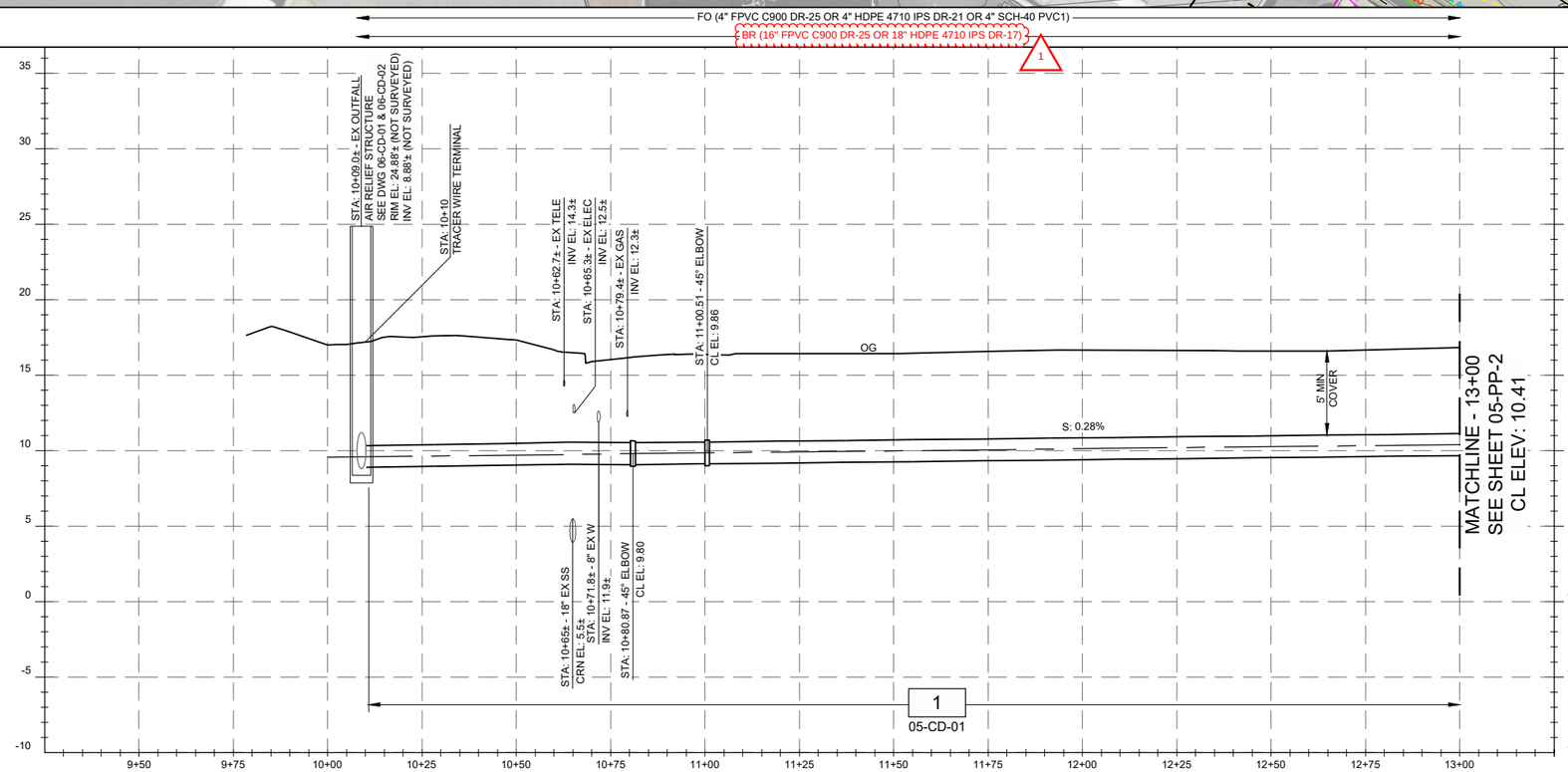

NOTES:

1. THE CONTRACTOR SHALL COMPLY WITH THE GENERAL CIVIL NOTES AND PERMITTING GENERAL NOTES.
2. HORIZONTAL ALIGNMENT AND PROFILE VERTICAL CURVES HEREIN ARE DESIGNED WITH THE MIN BENDING RADIUS OF THE LARGEST PIPELINE ASSUMING FPVC IS SELECTED. SMALLER BEND RADII MAY BE FEASIBLE DEPENDING ON THE PIPELINE MATERIAL AND LOCATION. THE CONTRACTOR MAY SUBMIT FOR APPROVAL MINOR HORIZONTAL ALIGNMENT CHANGES AND PROFILE VERTICAL CHANGES SO AS IT REDUCES FIELD CONFLICTS, REDUCES FITTINGS WHERE POSSIBLE, IS NOT ZERO SLOPED, AND DOES NOT RESULT IN A HIGH-SPOT.
3. PER SO CAL GAS REQUIREMENTS, ANY EXCAVATION WITHIN 10-FT OF A SO CAL GAS HIGH PRESSURE NATURAL GAS PIPELINE MUST BE COORDINATED THROUGH UNDERGROUND SERVICES ALERT (811) WITH A SO CAL GAS CO. STANDBY EMPLOYEE. IN ADDITION, ANY EXCAVATION, SUBGRADE REMOVAL, OR COMPACTION PERFORMED WITH 2' OF THE EDGE OF A SO CAL GAS PIPELINE BUT BE DONE UTILIZING HAND OPERATED TOOLS. ALL HIGH-PRESSURE GAS LINE EXCAVATIONS MUST HAVE A SOCAL GAS EMPLOYEE ON SITE.

CONSTRUCTION KEY NOTES:

1. INSTALL WRF OFFSITE PIPELINES, VALVES, AND APPURTENANCES PER HORIZONTAL PLAN AND VERTICAL PROFILE. ALIGNMENT IS CL OF FM2 UNLESS OTHERWISE NOTED. ORDER, PLACEMENT, AND REQUIRED CLEARANCES SHALL BE DETERMINED PER SPECIFIED TRENCH DETAIL UNDER PROFILE. SIZE & CLASS OF CARRIER AND/OR CASING PIPE MATERIALS ARE LISTED SCHEMATICALLY ABOVE PROFILE.
2. REUSE EX CHAIN LINK FENCE AND PRIVACY SLATS, REPLACE BARBED WIRE AND POSTS AS NEEDED AND MATCH EX.
3. CONNECT WITH AND MODIFY EX AIR RELIEF STRUCTURE PER DWGS DWG 06-CD-01 & 06-CD-02.
4. INSTALL TRACER WIRE TERMINAL (2060) AND GROUND ROD (16410)
5. HIGH PRIORITY UTILITY VERIFICATION REQ'D, TYP OF 2.

POTHOLING RESULTS:

EXISTING POTHOLING LOCATIONS AND RESULTS ARE APPROXIMATE, NOT SURVEYED, AND DO NOT PRECLUDE THE CONTRACTOR'S SOLE RESPONSIBILITY TO COMPLY WITH UTILITY VERIFICATION REQUIREMENTS.

1. 4" CONC PVMNT, 22" CVR, 24" DEEP, TELEPHONE.
2. 5" CONC PVMNT, EST. 11' CVR, SEWER.
3. 5" CONC PVMNT, 41" CVR, 46" DEEP, ELEC CONDUIT.
4. 4" AC PVMNT, 42" CVR, 44" DEEP, SCG GAS.

20 0 20 40 FEET
HORIZ SCALE 1"=20'

5 0 5 10 FEET
VERT SCALE 1"=5'

REGISTERED PROFESSIONAL ENGINEER
MICHAEL P. FISHER
No. C61794
CIVIL
STATE OF CALIFORNIA
05/29/2020

DESIGN P WEBSTER
DRAWN M TRUITT
CHECKED T LEWIS
APPROVED M FISHER

WATERWORKS ENGINEERS
2260 Douglas Blvd., Suite 105 • Roseville, CA 95661 • 916-780-9888

CITY OF MORRO BAY
WATER RECLAMATION FACILITY
LIFT STATION AND OFFSITE PIPELINES

PLAN AND PROFILE
FORCE MAIN PLAN AND PROFILE BEG TO STA 13+00

DATE MAY 2020
PROJECT NUMBER 17-082
DRAWING NUMBER 05-PP-1
SHEET NUMBER 24

CONFORMED SET - DEC 2020

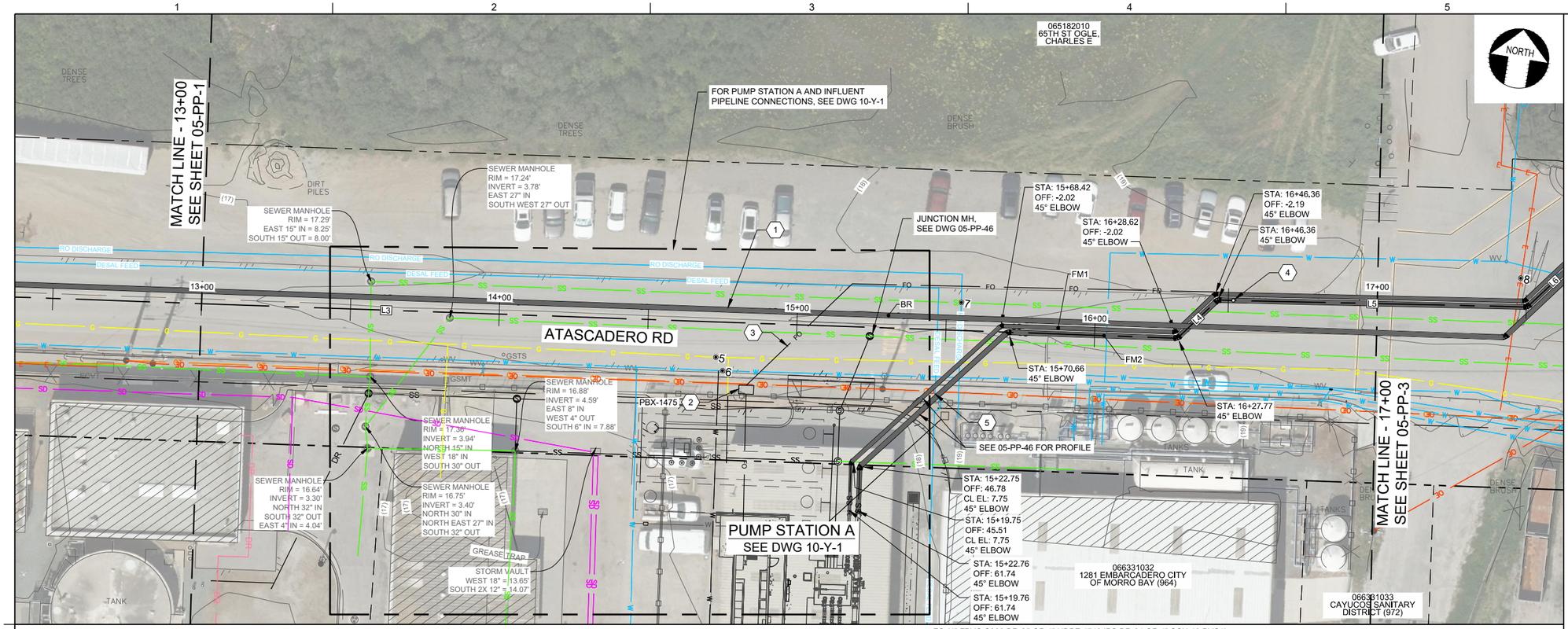

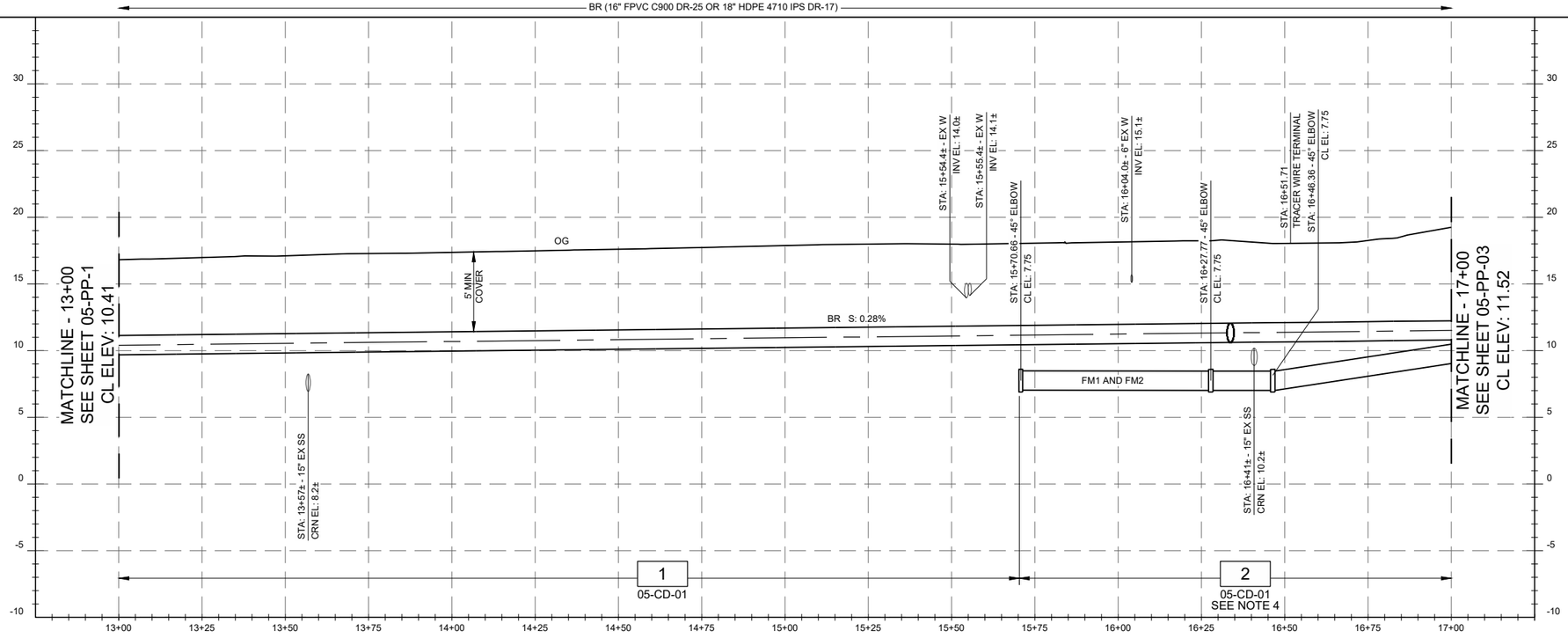

NOTES:

1. THE CONTRACTOR SHALL COMPLY WITH THE GENERAL CIVIL NOTES AND PERMITTING GENERAL NOTES.
2. HORIZONTAL ALIGNMENT AND PROFILE VERTICAL CURVES HEREIN ARE DESIGNED WITH THE MIN BENDING RADIUS OF THE LARGEST PIPELINE ASSUMING FPVC IS SELECTED. SMALLER BEND RADII MAY BE FEASIBLE DEPENDING ON THE PIPELINE MATERIAL AND LOCATION. THE CONTRACTOR MAY SUBMIT FOR APPROVAL MINOR HORIZONTAL ALIGNMENT CHANGES AND PROFILE VERTICAL CHANGES SO AS IT REDUCES FIELD CONFLICTS, REDUCES FITTINGS WHERE POSSIBLE, IS NOT ZERO SLOPED, AND DOES NOT RESULT IN A HIGH-SPOT.
3. PER SO CAL GAS REQUIREMENTS, ANY EXCAVATION WITHIN 10-FT OF A SO CAL GAS HIGH PRESSURE NATURAL GAS PIPELINE MUST BE COORDINATED THROUGH UNDERGROUND SERVICES ALERT (811) WITH A SO CAL GAS CO. STANDBY EMPLOYEE. IN ADDITION, ANY EXCAVATION, SUBGRADE REMOVAL, OR COMPACTION PERFORMED WITH 2' OF THE EDGE OF A SO CAL GAS PIPELINE BUT BE DONE UTILIZING HAND OPERATED TOOLS. ALL HIGH-PRESSURE GAS LINE EXCAVATIONS MUST HAVE A SOCAL GAS EMPLOYEE ON SITE.
4. ADAPT TRENCH DETAIL WHERE BRINE DIVERGES FROM FM1 AND FM2.

CONSTRUCTION KEY NOTES:

1. INSTALL WRF OFFSITE PIPELINES, VALVES, AND APPURTENANCES PER HORIZONTAL PLAN AND VERTICAL PROFILE. ALIGNMENT IS CL OF FM2 UNLESS OTHERWISE NOTED. ORDER, PLACEMENT, AND REQUIRED CLEARANCES SHALL BE DETERMINED PER SPECIFIED TRENCH DETAIL UNDER PROFILE. SIZE & CLASS OF CARRIER AND/OR CASING PIPE MATERIALS ARE LISTED SCHEMATICALLY ABOVE PROFILE.
2. INSTALL FIBER PULLBOX PER DWG 00-E-04/VLT SIZE S534.
3. WHERE FO DIVERGES FROM MAIN ALIGNMENT INSTALL PER DET 1/05-CD-09.
4. TRACER WIRE TERMINAL. LOCATE OVER CL FM2. 2060
5. HIGH PRIORITY UTILITY VERIFICATION REQUIRED FOR 14" DRAIN LINE FROM DESAL BUILDING TO 12" RO DISCHARGE PIPING (YELOMINE). EXPOSE BURIED MANHOLE TO UPPER BARREL.

POTHOLING RESULTS:

EXISTING POTHOLING LOCATIONS AND RESULTS ARE APPROXIMATE, NOT SURVEYED, AND DO NOT PRECLUDE THE CONTRACTOR'S SOLE RESPONSIBILITY TO COMPLY WITH UTILITY VERIFICATION REQUIREMENTS.

5. 6" A.C. PVMNT, 36" CVR, 42" DEEP, SCG GAS.
6. 6" A.C. PVMNT, 23" CVR 29" DEEP 10"W, 45° DEEP TO ADDTL 10"W.
7. 7" A.C. PVMNT, 35" CVR, 47" DEEP 12"W, 45° DEEP TO ADDTL 10"W

20 0 20 40 FEET
HORIZ SCALE 1"=20'

5 0 5 10 FEET
VERT SCALE 1"=5'

REGISTERED PROFESSIONAL ENGINEER
MICHAEL P. STEVENS
No. C67194
CIVIL
STATE OF CALIFORNIA
05/29/2020

DESIGN	P WEBSTER
DRAWN	P WEBSTER
CHECKED	T LEWIS
APPROVED	M FISHER

WATERWORKS ENGINEERS
2260 Douglas Blvd, Suite 100 • Roseville, CA 95661 • 916-780-2888

CITY OF MORRO BAY
WATER RECLAMATION FACILITY
LIFT STATION AND OFFSITE PIPELINES

PLAN AND PROFILE

FORCE MAIN PLAN AND PROFILE STA 13+00 TO STA 17+00

DATE	MAY 2020
PROJECT NUMBER	17-082
DRAWING NUMBER	05-PP-2
SHEET NUMBER	25

CONFORMED SET - DEC 2020

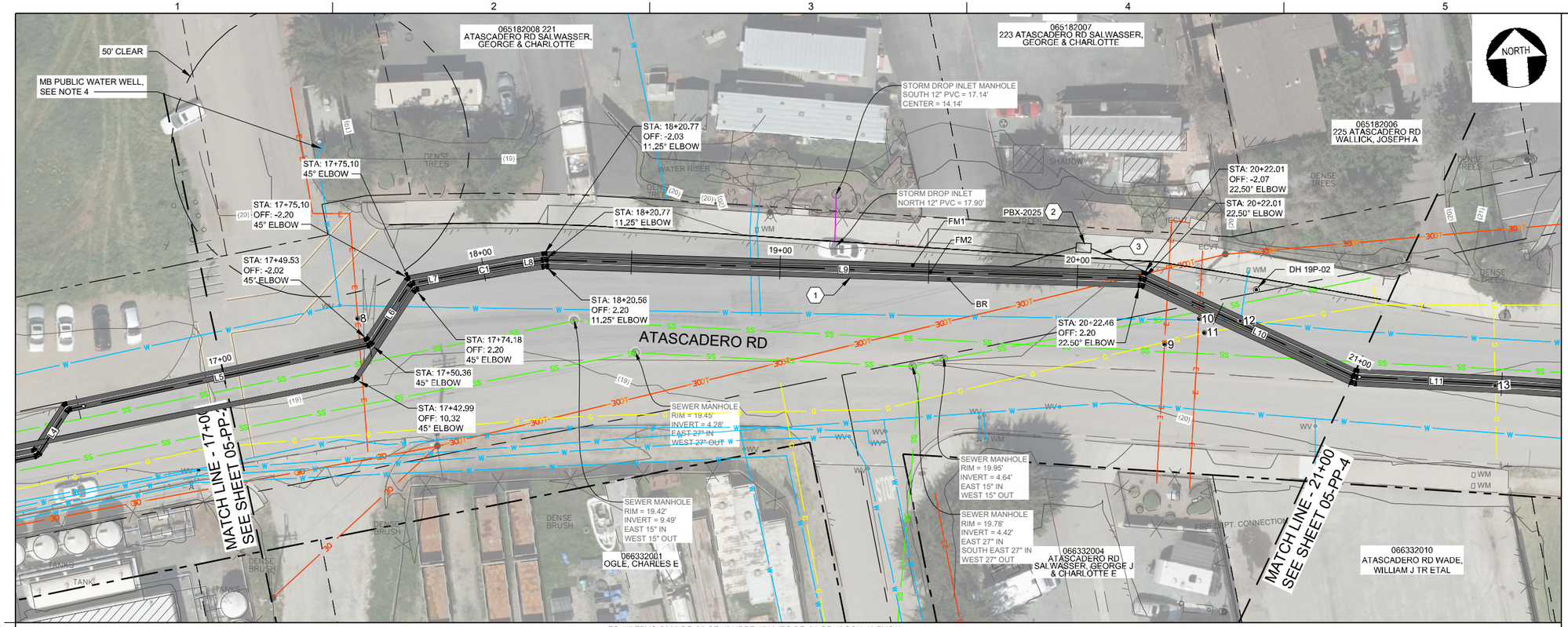

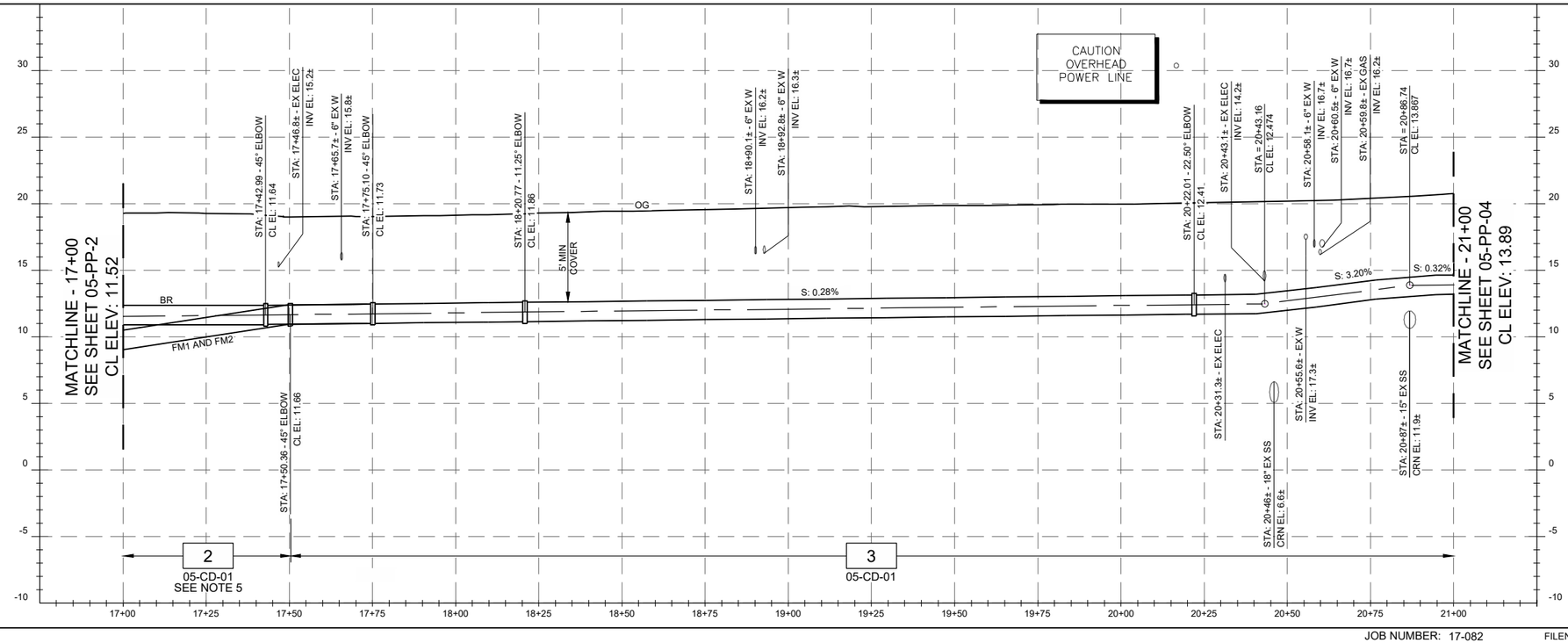

NOTES:

1. THE CONTRACTOR SHALL COMPLY WITH THE GENERAL CIVIL NOTES AND PERMITTING GENERAL NOTES.
2. HORIZONTAL ALIGNMENT AND PROFILE VERTICAL CURVES HEREIN ARE DESIGNED WITH THE MIN BENDING RADIUS OF THE LARGEST PIPELINE ASSUMING FPVC IS SELECTED. SMALLER BEND RADII MAY BE FEASIBLE DEPENDING ON THE PIPELINE MATERIAL AND LOCATION. THE CONTRACTOR MAY SUBMIT FOR APPROVAL MINOR HORIZONTAL ALIGNMENT CHANGES AND PROFILE VERTICAL CHANGES SO AS IT REDUCES FIELD CONFLICTS, REDUCES FITTINGS WHERE POSSIBLE, IS NOT ZERO SLOPED, AND DOES NOT RESULT IN A HIGH-SPOT.
3. PER SO CAL GAS REQUIREMENTS, ANY EXCAVATION WITHIN 10-FT OF A SO CAL GAS HIGH PRESSURE NATURAL GAS PIPELINE MUST BE COORDINATED THROUGH UNDERGROUND SERVICES ALERT (811) WITH A SO CAL GAS CO. STANDBY EMPLOYEE. IN ADDITION, ANY EXCAVATION, SUBGRADE REMOVAL, OR COMPACTION PERFORMED WITH 2' OF THE EDGE OF A SO CAL GAS PIPELINE BUT BE DONE UTILIZING HAND OPERATED TOOLS. ALL HIGH-PRESSURE GAS LINE EXCAVATIONS MUST HAVE A SOCAL GAS EMPLOYEE ON SITE.
4. PURSUANT TO DDW REGULATIONS, NO NON-POTABLE WATER UTILITIES SHALL BE INSTALLED WITHIN 50' OF A PUBLIC WATER WELL.
5. ADAPT TRENCH DETAIL WHERE BRINE DIVERGES FROM FM1 AND FM2.

CONSTRUCTION KEY NOTES:

1. INSTALL WRF OFFSITE PIPELINES, VALVES, AND APPURTENANCES PER HORIZONTAL PLAN AND VERTICAL PROFILE. ALIGNMENT IS CL OF FM2 UNLESS OTHERWISE NOTED. ORDER, PLACEMENT, AND REQUIRED CLEARANCES SHALL BE DETERMINED PER SPECIFIED TRENCH DETAIL UNDER PROFILE. SIZE & CLASS OF CARRIER AND/OR CASING PIPE MATERIALS ARE LISTED SCHEMATICALLY ABOVE PROFILE.
2. INSTALL FIBER PULLBOX PER DWG 00-E-04/VLT SIZE S534.
3. WHERE FO DIVERGES FROM MAIN ALIGNMENT INSTALL PER DET 1/05-CD-09.

POTHOLING RESULTS:

EXISTING POTHOLING LOCATIONS AND RESULTS ARE APPROXIMATE, NOT SURVEYED, AND DO NOT PRECLUDE THE CONTRACTOR'S SOLE RESPONSIBILITY TO COMPLY WITH UTILITY VERIFICATION REQUIREMENTS.

8. 6" A.C. PVMNT, 32" CVR, 36" DEEP, ELECTRICAL CONDUIT.
9. 4" A.C. PVMNT, 70" CVR, 75" DEEP, ELECTRICAL CONDUIT.
10. 9" A.C. PVMNT, 67" CVR, 74" DEEP, ELECTRICAL CONDUIT.
11. 4" A.C. PVMNT, 44" CVR, 46" DEEP, SCG GAS.
12. 6" A.C. PVMNT, 30" CVR, 31" DEEP, WATER.

20 0 20 40 FEET
HORIZ SCALE 1"=20'
5 0 5 10 FEET
VERT SCALE 1"=5'

REGISTERED PROFESSIONAL ENGINEER MICHAEL P. FISHER No. C61794 CIVIL STATE OF CALIFORNIA
05/29/2020

DESIGN P WEBSTER
DRAWN P WEBSTER
CHECKED T LEWIS
APPROVED M FISHER

WATERWORKS ENGINEERS
2260 Douglas Blvd., Suite 105 • Roseville, CA 95661 • 916-780-9888

CITY OF MORRO BAY
WATER RECLAMATION FACILITY LIFT STATION AND OFFSITE PIPELINES

PLAN AND PROFILE
FORCE MAIN PLAN AND PROFILE STA 17+00 TO STA 21+00

DATE MAY 2020
PROJECT NUMBER 17-082
DRAWING NUMBER 05-PP-3
SHEET NUMBER 26

CONFORMED SET - DEC 2020

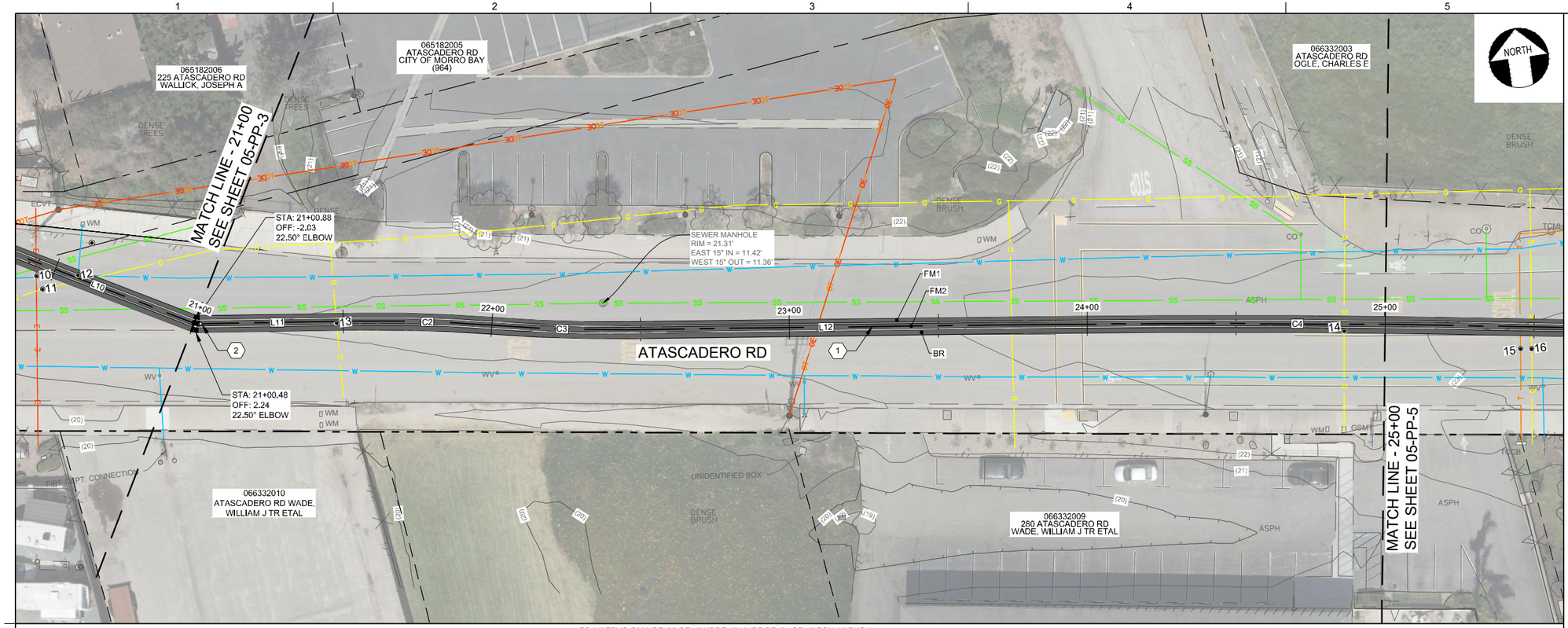

FO (4" FPVC C900 DR-25 OR 4" HDPE 4710 IPS DR-21 OR 4" SCH-40 PVC1)
FM1 (10" FPVC C900 DR-25 OR 12" HDPE 4710 IPS DR-17)
FM2 (16" FPVC C900 DR-25 OR 18" HDPE 4710 IPS DR-17)
BR (16" FPVC C900 DR-25 OR 18" HDPE 4710 IPS DR-17)

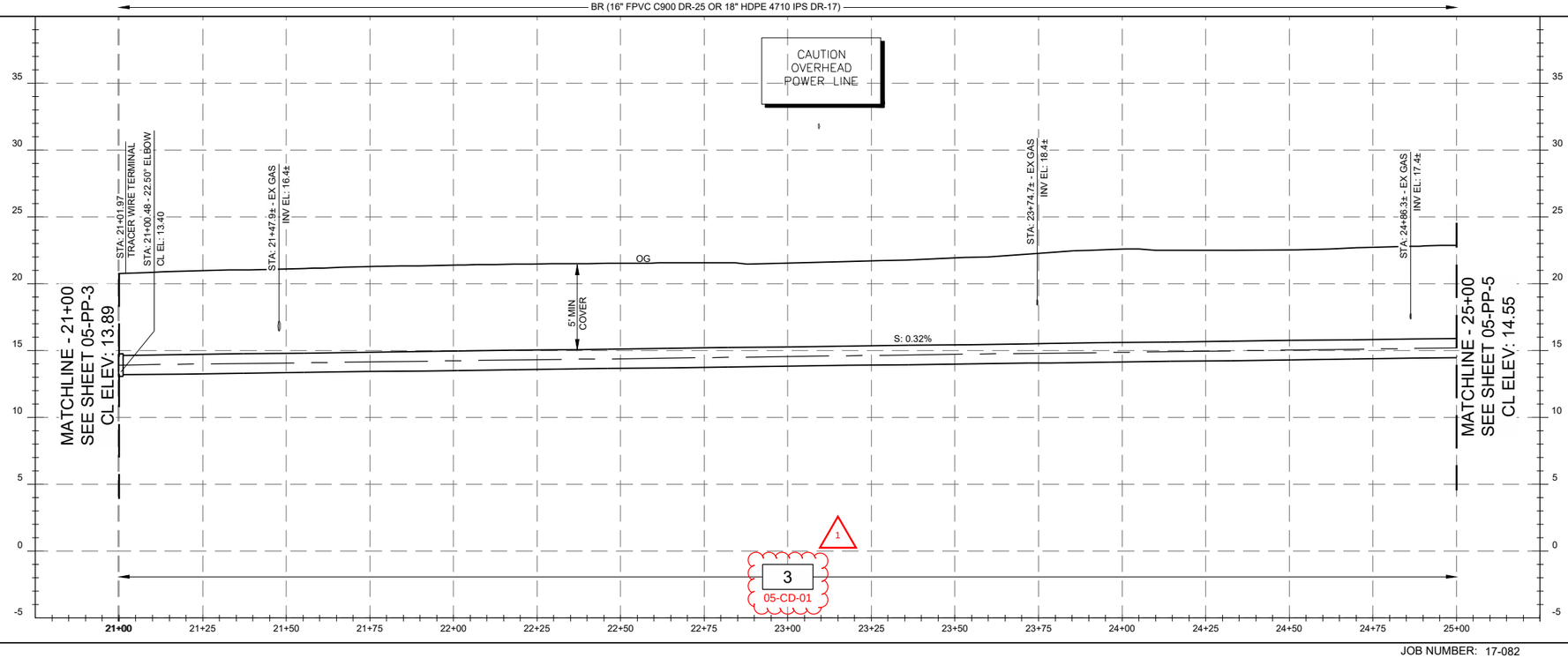

NOTES:

1. THE CONTRACTOR SHALL COMPLY WITH THE GENERAL CIVIL NOTES AND PERMITTING GENERAL NOTES.
2. HORIZONTAL ALIGNMENT AND PROFILE VERTICAL CURVES HEREIN ARE DESIGNED WITH THE MIN BENDING RADIUS OF THE LARGEST PIPELINE ASSUMING FPVC IS SELECTED. SMALLER BEND RADII MAY BE FEASIBLE DEPENDING ON THE PIPELINE MATERIAL AND LOCATION. THE CONTRACTOR MAY SUBMIT FOR APPROVAL MINOR HORIZONTAL ALIGNMENT CHANGES AND PROFILE VERTICAL CHANGES SO AS IT REDUCES FIELD CONFLICTS, REDUCES FITTINGS WHERE POSSIBLE, IS NOT ZERO SLOPED, AND DOES NOT RESULT IN A HIGH-SPOT.
3. PER SO CAL GAS REQUIREMENTS, ANY EXCAVATION WITHIN 10-FT OF A SO CAL GAS HIGH PRESSURE NATURAL GAS PIPELINE MUST BE COORDINATED THROUGH UNDERGROUND SERVICES ALERT (811) WITH A SO CAL GAS CO. STANDBY EMPLOYEE. IN ADDITION, ANY EXCAVATION, SUBGRADE REMOVAL, OR COMPACTION PERFORMED WITH 2' OF THE EDGE OF A SO CAL GAS PIPELINE BUT BE DONE UTILIZING HAND OPERATED TOOLS. ALL HIGH-PRESSURE GAS LINE EXCAVATIONS MUST HAVE A SOCAL GAS EMPLOYEE ON SITE.

CONSTRUCTION KEY NOTES:

1. INSTALL WRF OFFSITE PIPELINES, VALVES, AND APPURTENANCES PER HORIZONTAL PLAN AND VERTICAL PROFILE. ALIGNMENT IS CL OF FM2 UNLESS OTHERWISE NOTED. ORDER, PLACEMENT, AND REQUIRED CLEARANCES SHALL BE DETERMINED PER SPECIFIED TRENCH DETAIL UNDER PROFILE. SIZE & CLASS OF CARRIER AND/OR CASING PIPE MATERIALS ARE LISTED SCHEMATICALLY ABOVE PROFILE.
2. TRACER WIRE TERMINAL. LOCATE OVER CL FM2 (2060)

POTHOLING RESULTS:

EXISTING POTHOLING LOCATIONS AND RESULTS ARE APPROXIMATE, NOT SURVEYED, AND DO NOT PRECLUDE THE CONTRACTOR'S SOLE RESPONSIBILITY TO COMPLY WITH UTILITY VERIFICATION REQUIREMENTS.

13. 8" A.C. PVMNT, 38" CVR, 45" DEEP, SCG GAS.
14. 4" A.C. PVMNT, 54" CVR, 56" DEEP, SCG GAS.

20 0 20 40 FEET
HORIZ SCALE 1"=20'
5 0 5 10 FEET
VERT SCALE 1"=5'

REGISTERED PROFESSIONAL ENGINEER
MICHAEL P. FISHER
No. C61794
CIVIL
STATE OF CALIFORNIA
05/29/2020

DESIGN P WEBSTER
DRAWN P WEBSTER
CHECKED T LEWIS
APPROVED M FISHER

WATERWORKS ENGINEERS
2260 Douglas Blvd., Suite 105 • Roseville, CA 95661 • 916-780-9888

CITY OF MORRO BAY
WATER RECLAMATION FACILITY
LIFT STATION AND OFFSITE PIPELINES

PLAN AND PROFILE
FORCE MAIN PLAN AND PROFILE
STA 21+00 TO STA 25+00

DATE MAY 2020
PROJECT NUMBER 17-082
DRAWING NUMBER 05-PP-4
SHEET NUMBER 27

CONFORMED SET - DEC 2020

CALTRANS SHEET NOTES

1. CONTRACTOR SHALL PROVIDE SHORING PLANS AND CALCULATIONS FOR ALL EXCAVATIONS GREATER THAN 5' DEEP. SHORING PLANS SHALL BE SIGNED AND STAMPED BY A PROFESSIONAL CIVIL ENGINEER REGISTERED IN STATE OF CALIFORNIA.
2. PAVEMENT STRIPING/MARKING SHALL BE REPLACED IN KIND IN ACCORDANCE WITH CALTRANS STANDARDS
3. SIDEWALKS AND CURB RAMPS IMPACTED BY CONSTRUCTION SHALL BE REPLACED TO CURRENT CALTRANS STANDARDS AND ADA CERTIFICATION OF COMPLIANCE REQUIREMENTS.
4. DURING NON-WORKING HOURS, OPEN TRENCHES SHALL BE COVERED, BACKFILLED, OR PROTECTED
5. AT ANY LOCATION WHERE THE SPEED LIMIT IS 45 MPH OR GREATER, STEEL PLATING SHALL BE GROUND IN, FLUSH WITH THE ROADWAY. FOR STEEL PLATES WITH SPANS GREATER THAN 5 FEET 3 INCHES, A STRUCTURAL DESIGN SHALL BE PREPARED, SIGNED, AND STAMPED BY A PROFESSIONALCIVIL ENGINEER REGISTERED IN THE STATE OF CALIFORNIA.
6. CONTRACTOR SHALL COORDINATE WORK IN MANNER TO KEEP THE BIKE PATH OPEN AS MUCH AS POSSIBLE
7. PROTECT IN PLACE EXISTING CALTRANS LIGHTING CONDUITS AT ATASCADERO RD. IF ANY DAMAGE OCCURS, CALTRANS FAICLITIES SHALL BE REPLACED IN KIND BY THE CONTRACTOR AT NO COST TO THE STATE
8. CONTRACTOR SHALL OBTAIN A CALTRANS DOUBLE PERMIT PRIOR TO THE WORK.
9. TWO WEEKS PRIOR TO THE START OF THE WORK, CONTRACTOR SHALL CONTACT THE CALTRANS ENCROACHMENT PERMIT INSPECTOR (PETER MUTUTWA, 805-276-1570
10. CONTRACTOR SHALL PROVIDE PROTECTION PLANS FOR ALL EXISTING UTILITIES WHICH MAY BE DISTURBED DURING TRENCHING OPERATIONS. PROTECTION PLANS SHALL BE SIGNED AND STAMPED BY A PROFESSIONAL CIVIL ENGINEER REGISTERED IN THE STATE OF CALIFORNIA.

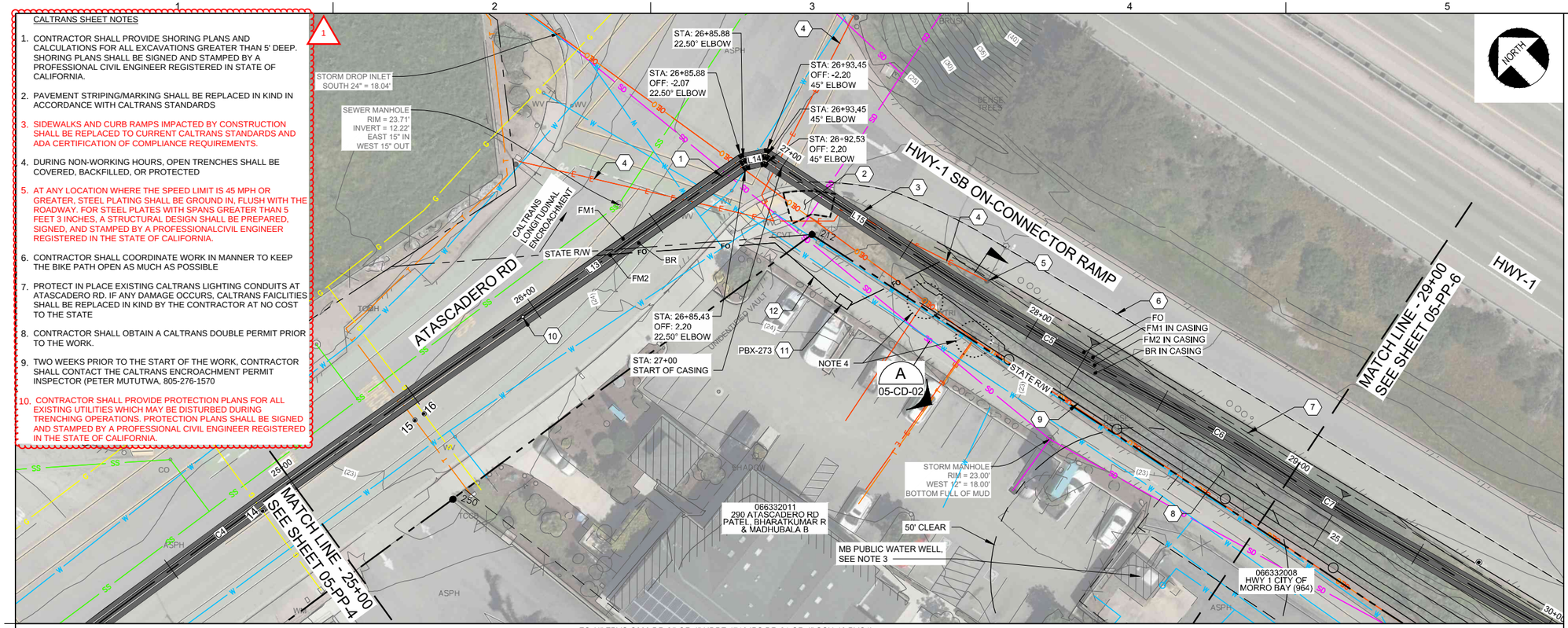

FO (4" FPVC C900 DR-25 OR 4" HDPE 4710 IPS DR-21 OR 4" SCH-40 PVC1)
FM1 (10" FPVC C900 DR-25 OR 12" HDPE 4710 IPS DR-17) — FM1 (10" FPVC C900 DR-25 OR 12" HDPE 4710 IPS DR-11) IN CASING PER DET 1/05-CD-15 (FILL ANNULUS TYPE 2 LCC)
FM2 (16" FPVC C900 DR-25 OR 18" HDPE 4710 IPS DR-17) — FM2 (16" FPVC C900 DR-25 OR 20" HDPE 4710 IPS DR-11) IN CASING PER DET 1/05-CD-15 (FILL ANNULUS TYPE 2 LCC)
BR (16" FPVC C900 DR-25 OR 18" HDPE 4710 IPS DR-17) — BR (16" FPVC C900 DR-25 OR 18" HDPE 4710 IPS DR-17) IN CASING PER DET 1/05-CD-15 (FILL ANNULUS TYPE 2 LCC)

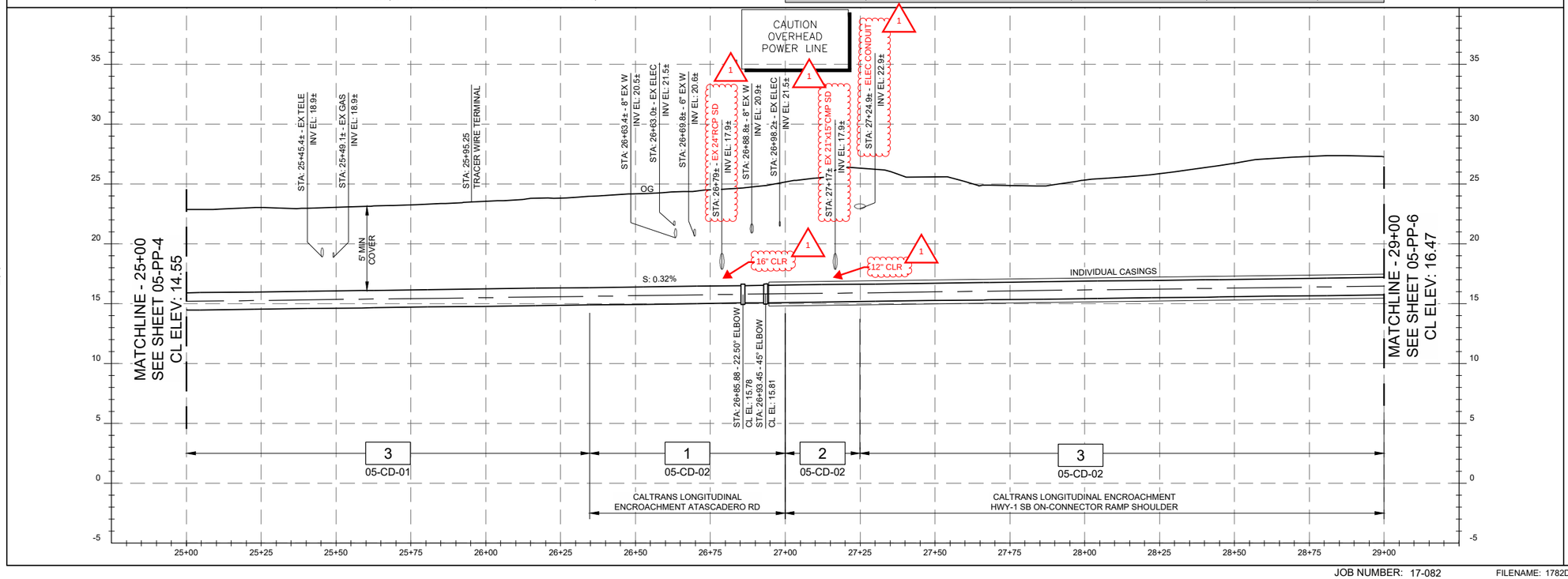

NOTES:

1. THE CONTRACTOR SHALL COMPLY WITH THE GENERAL CIVIL NOTES AND PERMITTING GENERAL NOTES.
2. HORIZONTAL ALIGNMENT AND PROFILE VERTICAL CURVES HEREIN ARE DESIGNED WITH THE MIN BENDING RADIUS OF THE LARGEST PIPELINE ASSUMING FPVC IS SELECTED. SMALLER BEND RADII MAY BE FEASIBLE DEPENDING ON THE PIPELINE MATERIAL AND LOCATION. THE CONTRACTOR MAY SUBMIT FOR APPROVAL MINOR HORIZONTAL ALIGNMENT CHANGES AND PROFILE VERTICAL CHANGES SO AS IT REDUCES FIELD CONFLICTS, REDUCES FITTINGS WHERE POSSIBLE, IS NOT ZERO SLOPED, AND DOES NOT RESULT IN A HIGH-SPOT.
3. PURSUANT TO DDW REGULATIONS, NO NON-POTABLE WATER UTILITIES SHALL BE INSTALLED WITHIN 50' OF A PUBLIC WATER WELL.
4. EXCAVATION WITHIN 6' OF PP SHALL BE COORDINATED WITH PGE AND MAY REQUIRE CONSTRUCTION PHASE SUPPORT.

CONSTRUCTION KEY NOTES:

1. INSTALL WRF OFFSITE PIPELINES, VALVES, AND APPURTENANCES PER HORIZONTAL PLAN AND VERTICAL PROFILE. ALIGNMENT IS CL OF FM2 UNLESS OTHERWISE NOTED. ORDER, PLACEMENT, AND REQUIRED CLEARANCES SHALL BE DETERMINED PER SPECIFIED TRENCH DETAIL UNDER PROFILE. SIZE & CLASS OF CARRIER AND/OR CASING PIPE MATERIALS ARE LISTED SCHEMATICALLY ABOVE PROFILE.
2. PROTECT RAMP. REPLACE SIDEWALK, CURB, & GUTTER UP TO EDGE OF RAMP PER CALTRANS STANDARD PLAN A87A.
3. TEMPORARILY RELOCATE FREEWAY ENTRANCE SIGN POST IN CONJUNCTION WITH APPROVED TEMPORARY TRAFFIC CONTROL PLAN.
4. PROTECT IN PLACE EX CALTRANS LIGHTING CONDUITS. SEE CALTRANS SHEET NOTE 7.
5. PROTECT IN PLACE EX CALTRANS STREET LIGHTING POLE, SIGN POST, AND REFLECTIVE DELINEATOR.
6. PAVEMENT REPLACEMENT PER DET 4/05-CD-02.
7. SET HINGE POINT PER DET 4/05-CD-02.
8. GRADING PER DET 4/05-CD-02.
9. REPLACE 135-LF 6'-0" CHAIN LINK FENCE PER CALTRANS STD PLAN A85.
10. TRACER WIRE TERMINAL. LOCATE OVER CL FM2. (2060)
11. INSTALL FIBER PULLBOX PER DWG 00-E-04/VLT SIZE S534.
12. WHERE FO DIVERGES FROM MAIN ALIGNMENT INSTALL PER DET 1/05-CD-09.

POTHOLING RESULTS:

EXISTING POTHOLING LOCATIONS AND RESULTS ARE APPROXIMATE, NOT SURVEYED, AND DO NOT PRECLUDE THE CONTRACTOR'S SOLE RESPONSIBILITY TO COMPLY WITH UTILITY VERIFICATION REQUIREMENTS.

15. 4" A.C. PVMNT, 36" CVR, 44" DEEP, TELEPHONE CONDUIT
16. 4" A.C. PVMNT, 43" CVR, 45" DEEP, SCG GAS

20 0 20 40 FEET
HORIZ SCALE 1"=20'
5 0 5 10 FEET
VERT SCALE 1"=5'

REGISTERED PROFESSIONAL ENGINEER — MICHAEL P. PYLMAN — No. C67194 — CIVIL — STATE OF CALIFORNIA
05/29/2020

DESIGN	P WEBSTER
DRAWN	P WEBSTER
CHECKED	T LEWIS
APPROVED	M FISHER

WATERWORKS ENGINEERS
2260 Douglas Blvd., Suite 105 • Roseville, CA 95661 • 916-780-9888

CITY OF MORRO BAY
WATER RECLAMATION FACILITY LIFT STATION AND OFFSITE PIPELINES

PLAN AND PROFILE
FORCE MAIN PLAN AND PROFILE STA 25+00 TO STA 29+00

DATE MAY 2020
PROJECT NUMBER 17-082
DRAWING NUMBER 05-PP-5
SHEET NUMBER 28

L:\CAD\PROJECTS\17-082 MORRO BAY PS AND PIPELINE_(S)\PROJECT FILES\DELIVERABLES\1782D-05PP105.DWG

JOB NUMBER: 17-082 FILENAME: 1782D-05PP105.DWG PLOT DATE: 05/23/20 PLOT TIME: 14:34:05

CONFORMED SET - DEC 2020

POTHOLING RESULTS:

EXISTING POTHOLING LOCATIONS AND RESULTS ARE APPROXIMATE, NOT SURVEYED, AND DO NOT PRECLUDE THE CONTRACTOR'S SOLE RESPONSIBILITY TO COMPLY WITH UTILITY VERIFICATION REQUIREMENTS.

17. UNPAVED, 30" CVR, 40" DEEP, W.

18. UNPAVED, 41" CVR, 52" DEEP, SD AND W (POTENTIALLY ABANDONED)

CALTRANS SHEET NOTES

1. CONTRACTOR SHALL PROVIDE SHORING PLANS AND CALCULATIONS FOR ALL EXCAVATIONS GREATER THAN 5' DEEP. SHORING PLANS SHALL BE SIGNED AND STAMPED BY A PROFESSIONAL CIVIL ENGINEER REGISTERED IN STATE OF CALIFORNIA.
2. PAVEMENT STRIPING/MARKING SHALL BE REPLACED IN KIND IN ACCORDANCE WITH CALTRANS STANDARDS
3. SIDEWALKS AND CURB RAMPS IMPACTED BY CONSTRUCTION SHALL BE REPLACED TO CURRENT CALTRANS STANDARDS AND ADA CERTIFICATION OF COMPLIANCE REQUIREMENTS.
4. DURING NON-WORKING HOURS, OPEN TRENCHES SHALL BE COVERED, BACKFILLED, OR PROTECTED
5. AT ANY LOCATION WHERE THE SPEED LIMIT IS 45 MPH OR GREATER, STEEL PLATING SHALL BE GROUND IN, FLUSH WITH THE ROADWAY. FOR STEEL PLATES WITH SPANS GREATER THAN 5 FEET 3 INCHES, A STRUCTURAL DESIGN SHALL BE PREPARED, SIGNED, AND STAMPED BY A PROFESSIONALCIVIL ENGINEER REGISTERED IN THE STATE OF CALIFORNIA.
6. CONTRACTOR SHALL COORDINATE WORK IN MANNER TO KEEP THE BIKE PATH OPEN AS MUCH AS POSSIBLE
7. PROTECT IN PLACE EXISTING CALTRANS LIGHTING CONDUITS AT ATASCADERO RD. IF ANY DAMAGE OCCURS, CALTRANS FAICLITIES SHALL BE REPLACED IN KIND BY THE CONTRACTOR AT NO COST TO THE STATE
8. CONTRACTOR SHALL OBTAIN A CALTRANS DOUBLE PERMIT PRIOR TO THE WORK.
9. TWO WEEKS PRIOR TO THE START OF THE WORK, CONTRACTOR SHALL CONTACT THE CALTRANS ENCROACHMENT PERMIT INSPECTOR (PETER MUTUTWA, 805-276-1570
10. CONTRACTOR SHALL PROVIDE PROTECTION PLANS FOR ALL EXISTING UTILITIES WHICH MAY BE DISTURBED DURING TRENCHING OPERATIONS. PROTECTION PLANS SHALL BE SIGNED AND STAMPED BY A PROFESSIONAL CIVIL ENGINEER REGISTERED IN THE STATE OF CALIFORNIA.

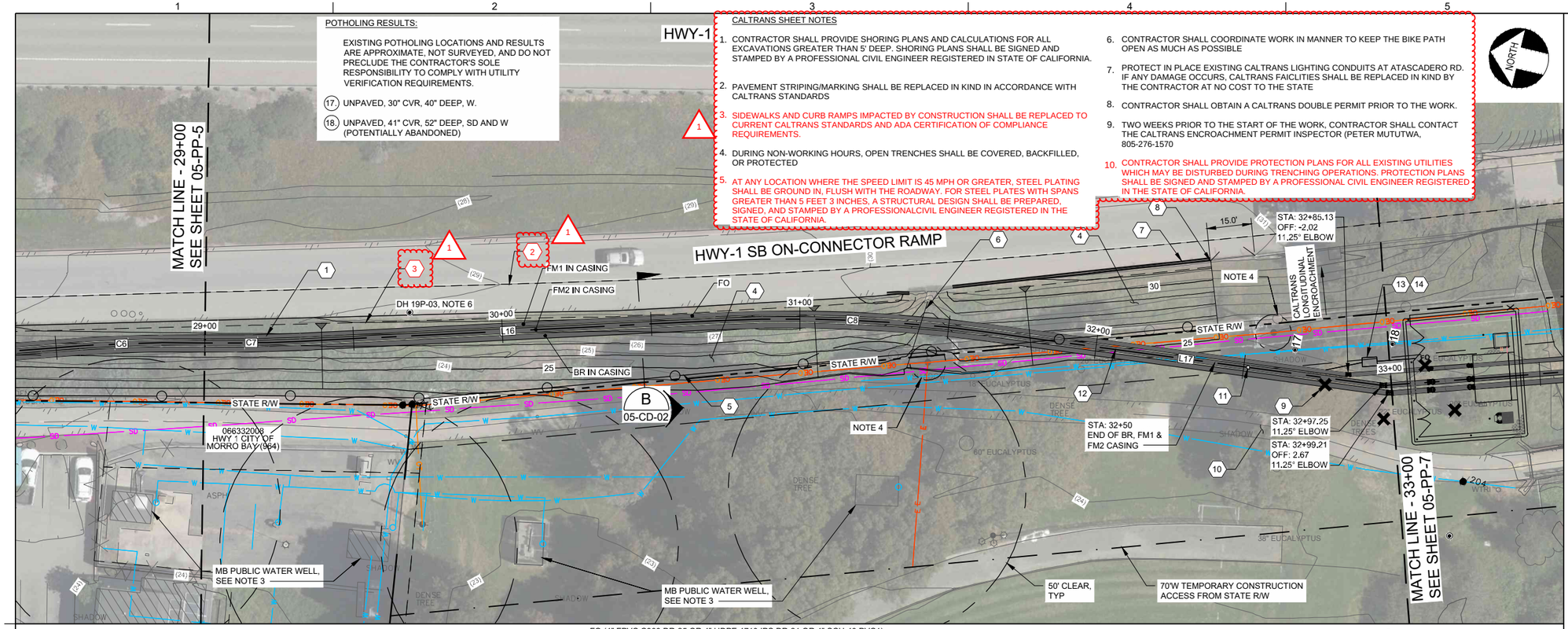

FO (4" FPVC C900 DR-25 OR 4" HDPE 4710 IPS DR-21 OR 4" SCH-40 PVC1) → FO (4" FPVC C900 DR-25 OR 4" HDPE 4710 IPS DR-21 OR 4" SCH-40 PVC1)

FM1 (10" FPVC C900 DR-25 OR 12" HDPE 4710 IPS DR-17) IN CASING PER DET 1/05-CD-15 (FILL ANNULUS TYPE 2 LCC) → FM1 (10" FPVC C900 DR-25 OR 12" HDPE 4710 IPS DR-17)

FM2 (16" FPVC C900 DR-25 OR 18" HDPE 4710 IPS DR-17) IN CASING PER DET 1/05-CD-15 (FILL ANNULUS TYPE 2 LCC) → FM2 (16" FPVC C900 DR-25 OR 18" HDPE 4710 IPS DR-17)

BR (16" FPVC C900 DR-25 OR 18" HDPE 4710 IPS DR-17) IN CASING PER DET 1/05-CD-15 (FILL ANNULUS TYPE 2 LCC) → BR (16" FPVC C900 DR-25 OR 18" HDPE 4710 IPS DR-17)

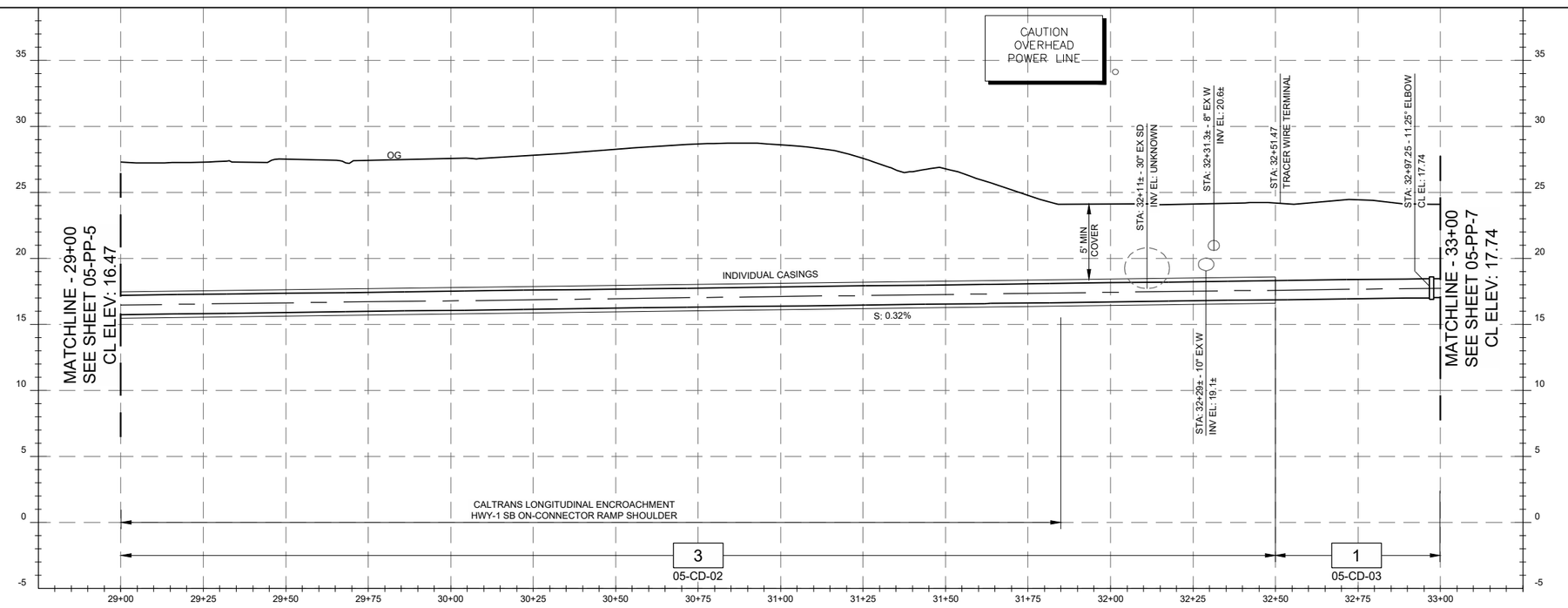

NOTES:

1. THE ONTRACTOR SHALL COMPLY WITH THE GENERAL CIVIL NOTES AND PERMITTING GENERAL NOTES.
2. HORIZONTAL ALIGNMENT AND PROFILE VERTICAL CURVES HEREIN ARE DESIGNED WITH THE MIN BENDING RADIUS OF THE LARGEST PIPELINE ASSUMING FPVC IS SELECTED. SMALLER BEND RADII MAY BE FEASIBLE DEPENDING ON THE PIPELINE MATERIAL AND LOCATION. THE CONTRACTOR MAY SUBMIT FOR APPROVAL MINOR HORIZONTAL ALIGNMENT CHANGES AND PROFILE VERTICAL CHANGES SO AS IT REDUCES FIELD CONFLICTS, REDUCES FITTINGS WHERE POSSIBLE, IS NOT ZERO SLOPED, AND DOES NOT RESULT IN A HIGH-SPOT.
3. PURSUANT TO DDW REGULATIONS, NO NON-POTABLE WATER UTILITIES SHALL BE INSTALLED WITHIN 50' OF A PUBLIC WATER WELL.
4. EXCAVATION WITHIN 6' OF PP SHALL BE COORDINATED WITH PGE AND MAY REQUIRE CONSTRUCTION PHASE SUPPORT
5. TREES NOT MARKED FOR REMOVAL WITHIN THE TEMPORARY CONTRUCTION EASEMENT LIMITS AND OVER 6" DBH SHALL BE PROTECTED IN PLACE AND MAY BE TRIMMED PER THE PROJECT ARBORISTS RECOMMENDATIONS. TREES SMALLER THAN 6" DBH MAY BE REMOVED BY THE CONTRACTOR AS PART OF CLEARING AND GRUBBING OPERATIONS WITHIN TEMPORARY CONSTRUCTION ACCESS LIMITS IN COORDINATION WITH PROJECT BIOLOGIST AND ARBORIST.
6. SEE PROJECT GEOTECHNICAL REPORT

KEY NOTES:

1. INSTALL WRF OFFSITE PIPELINES, VALVES, AND APPURTENANCES PER HORIZONTAL PLAN AND VERTICAL PROFILE. ORDER AND PLACEMENT SHALL BE DETERMINED PER SPECIFIED TRENCH DETAIL. SIZE AND CLASS OF CARRIER AND/OR CASING PIPE MATERIALS ARE LISTED ABOVE PROFILE.
2. PAVEMENT REPLACEMENT PER DET 4/05-CD-02.
3. SET HINGE POINT PER DET 4/05-CD-02.
4. GRADING PER DET 4/05-CD-02.
5. REPLACE 340-LF 6' HIGH CHAIN LINK FENCE PER CALTRANS STD PLAN A85.
6. REPLACE HMA DIKE OUTLET AND MATCH EXISTING.
7. REPLACE 100-LF HMA DIKE TYPE "E" CASE "F" PER CALTRANS STD PLAN A87B
8. LONGITUDINAL LIMIT OF AC PVMT AND DIKE REPLACEMENT, FENCE REPLACEMENT, AND SLOPE MODIFICATION. CONFORM TO EXISTING GRADE.
9. TREE REMOVAL, TYP OF 2. SEE NOTE 5.
10. PROTECT EXISTING BIKE PATH IN PLACE.
11. INSTALL TRACER WIRE TERMINAL (2060) AND GROUND ROD (16410)
12. HIGH PRIORITY UTILITY VERIFICATION REQUIRED FOR 30" SD (UNMARKED).
13. INSTALL FIBER PULLBOX PER DWG 00-E-04/VLT SIZE S534.
14. WHERE FO DIVERGES FROM MAIN ALIGNMENT INSTALL PER DET 1/05-CD-09.

HORIZ SCALE 1"=20'

VERT SCALE 1"=5'

REGISTERED PROFESSIONAL ENGINEER — MICHAEL P. WEBSTER — No. C67194 — CIVIL — STATE OF CALIFORNIA

05/29/2020

DESIGN	P WEBSTER
DRAWN	P WEBSTER
CHECKED	T LEWIS
APPROVED	M FISHER

WATERWORKS ENGINEERS
2260 Douglas Blvd. Suite 105 • Roseville, CA 95661 • 916-780-9888

CITY OF MORRO BAY
WATER RECLAMATION FACILITY
LIFT STATION AND OFFSITE PIPELINES

PLAN AND PROFILE

FORCE MAIN PLAN AND PROFILE STA 29+00 TO STA 33+00

DATE	MAY 2020
PROJECT NUMBER	17-082
DRAWING NUMBER	05-PP-6
SHEET NUMBER	29

L:\CAD\PROJECTS\17-082 MORRO BAY PS AND PIPELINE_(S)\PROJECT FILES\DELIVERABLES\1782D-05PP106.DWG

JOB NUMBER: 17-082 FILENAME: 1782D-05PP106.DWG PLOT DATE: 05/23/20 PLOT TIME: 14:34:33

CONFORMED SET - DEC 2020

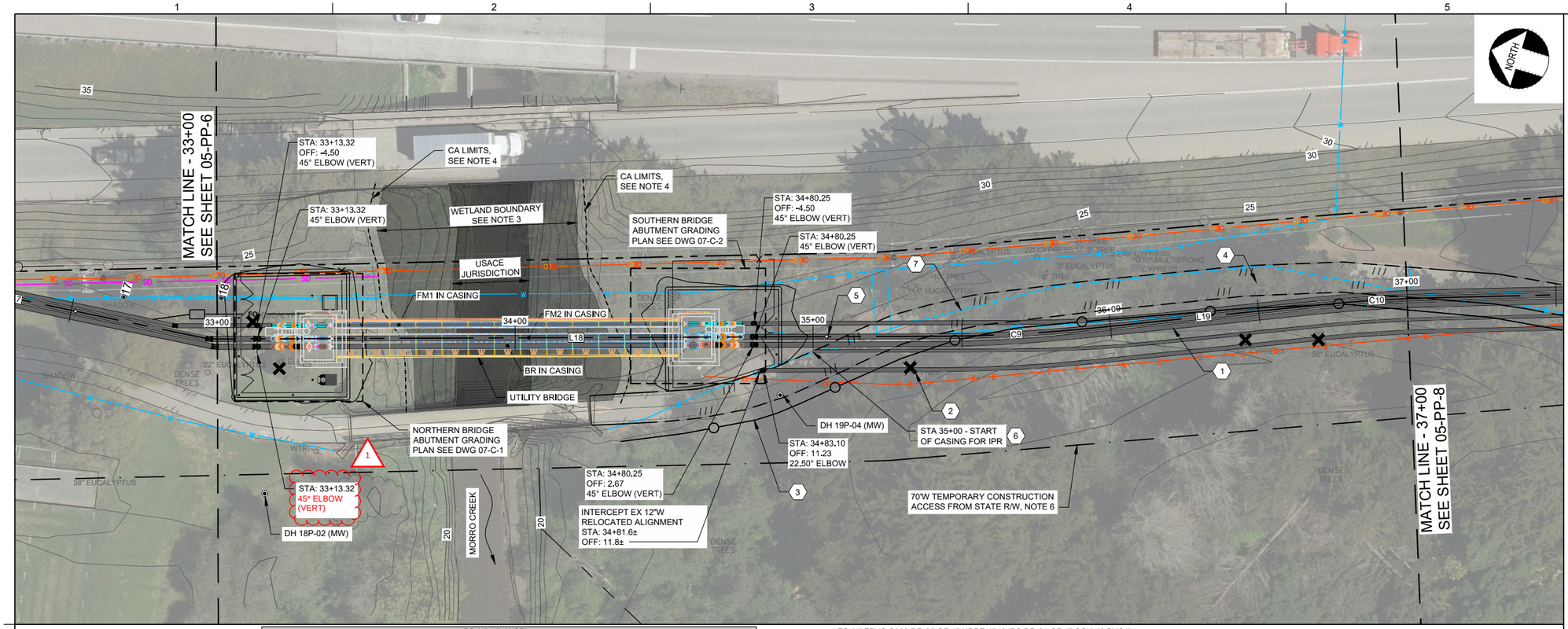

CONTINUATION SEE PREVIOUS SHEET

- FO (4" 1/8 WSP) → FO (4" FPVC C900 DR-25 OR 4" HDPE 4710 IPS DR-21 OR 4" SCH-40 PVC1)
- FM1 (10" DIP, NOTE 9) IN CASING (14" 1/8 WSP) → FM1 (10" FPVC C900 DR-25 OR 12" HDPE 4710 IPS DR-17)
- FM2 (16" DIP, NOTE 9) IN CASING (20" 1/8 WSP) → FM2 (16" FPVC C900 DR-25 OR 18" HDPE 4710 IPS DR-17)
- BR (16" DIP, NOTE 9) IN CASING (20" 1/8 WSP) → BR (16" FPVC C900 DR-25 OR 18" HDPE 4710 IPS DR-17)
- IPR (8" FPVC DR-25 OR 10" HDPE 4710 IPS DR-17) IN CASING PER DET 1/05-CD-15
- 12"W (12" FPVC C900 DR-18) IN CASING PER DET 1/05-CD-15

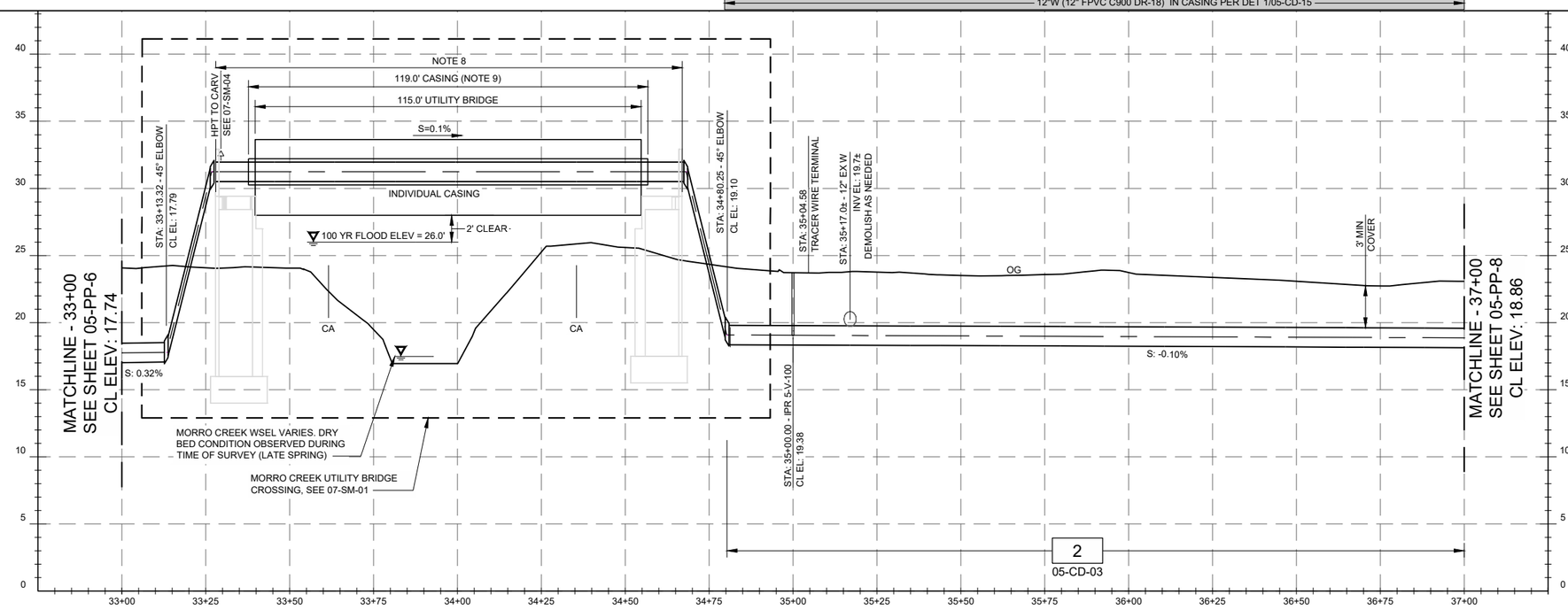

NOTES:

1. THE CONTRACTOR SHALL COMPLY WITH THE GENERAL CIVIL NOTES AND PERMITTING GENERAL NOTES.
2. HORIZONTAL ALIGNMENT AND PROFILE VERTICAL CURVES HEREIN ARE DESIGNED WITH THE MIN BENDING RADIUS OF THE LARGEST PIPELINE ASSUMING FPVC IS SELECTED. SMALLER BEND RADII MAY BE FEASIBLE DEPENDING ON THE PIPELINE MATERIAL AND LOCATION. THE CONTRACTOR MAY SUBMIT FOR APPROVAL MINOR HORIZONTAL ALIGNMENT CHANGES AND PROFILE VERTICAL CHANGES SO AS IT REDUCES FIELD CONFLICTS, REDUCES FITTINGS WHERE POSSIBLE, IS NOT ZERO SLOPED, AND DOES NOT RESULT IN A HIGH-SPOT.
3. WETLAND BOUNDARY IS REPRESENTATIVE OF CDFW/RWQCB/CCC JURISDICTION AS DELINEATED IN THE PROJECT BIOLOGICAL RESOURCES ASSESSMENT (KMA 2019).
4. CONSTRUCTION ACTIVITY (CA) LIMITS OFFSET 3' FROM EDGE OF WETLAND BOUNDARY. GROUND DISTURBING ACTIVITIES SHALL NOT EXTEND PAST CA LIMITS. SWPPP BMPS SHALL BE INSTALLED PER APPROVED SWPPP PLAN AT A MINIMUM ALONG CA LIMITS.
5. EXCAVATION WITHIN 6' OF PP SHALL BE COORDINATED WITH PGE AND MAY REQUIRE CONSTRUCTION PHASE SUPPORT.
6. CONTRACTOR SHALL PREPARE, SUBMIT FOR REVIEW, AND IMPLEMENT A SITE SECURITY PLAN WHEREBY THE VISTRA PRIVATE PROPERTY SHALL BE SECURED AT ALL TIMES VIA TEMPORARY FENCING AT THE LIMITS OF THE TEMPORARY CONSTRUCTION EASEMENT.
7. TREES NOT MARKED FOR REMOVAL WITHIN THE TEMPORARY CONTRUCTION EASEMENT LIMITS AND OVER 6" DBH SHALL BE PROTECTED IN PLACE AND MAY BE TRIMMED PER THE PROJECT ARBORISTS RECOMMENDATIONS. TREES SMALLER THAN 6" DBH MAY BE REMOVED BY THE CONTRACTOR AS PART OF CLEARING AND GRUBBING OPERATIONS WITHIN TEMPORARY CONSTRUCTION ACCESS LIMITS IN COORDINATION WITH PROJECT BIOLOGIST AND ARBORIST. IF DELINEATED, ENVIRONMENTALLY SENSITIVE AREAS SHALL BE CORDONED OFF PER BIOLOGIST'S RECOMMENDATIONS.
8. PRESSURE TESTING FOR THE CARRIER PIPELINES ALONG THE UTILITY BRIDGE AND ABUTMENTS SHALL BE CONDUCTED INDIVIDUALLY AND MAY NOT EXCEED THE FOLLOWING PRESSURES: FM1 (50 PSI), FM2 (30 PSI), BR (90 PSI).
9. ENCASED CARRIER PIPE SHALL BE PRJ DIP AND SHALL ACCOMMODATE UP TO 1.05" OF LINEAR EXPANSION OR 120-DEG THERMAL EXPANSION FROM AT A NEUTRAL SETTING, WHICHEVER IS GREATER. ANNULAR SPACE TO CASING SHALL REMAIN UNFILLED.

CONSTRUCTION KEY NOTES:

1. INSTALL WRF OFFSITE PIPELINES, VALVES, AND APPURTENANCES PER HORIZONTAL PLAN AND VERTICAL PROFILE. ALIGNMENT IS CL OF FM2 UNLESS OTHERWISE NOTED. ORDER, PLACEMENT, AND REQUIRED CLEARANCES SHALL BE DETERMINED PER SPECIFIED TRENCH DETAIL UNDER PROFILE. SIZE & CLASS OF CARRIER AND/OR CASING PIPE MATERIALS ARE LISTED SCHEMATICALLY ABOVE PROFILE.
2. TREE REMOVAL, TYP OF 5. SEE NOTE 7.
3. REPLACE 271-LF 6'-0" CHAIN LINK FENCE WITH BARBED WIRE 45-DEG ARM PER (2800) REUSE AND REINSTALL EX VISTRA ACCESS GATES WHERE PRESENT.
4. REPLACE 260-LF EX BIKE PATH PER DETAIL 1/ 05-CD-10.
5. INSTALL TRACER WIRE TERMINAL (2060) AND GROUND ROD. (16410)
6. 5-V-100 PER (2200) . TERMINATE WITH CAPPED 5'-0" SPOOL.
7. 12" PVC W TO BE ABANDONED AND FILLED WITH TYPE 2 LCC OR DEMOLISHED AS NEEDED IN CONJUNCTION WITH APPROVED BYPASS PLAN.

20 0 20 40 FEET
HORIZ SCALE 1"=20'

5 0 5 10 FEET
VERT SCALE 1"=5'

REGISTERED PROFESSIONAL ENGINEER
MICHAEL P. WEBSTER
No. C67194
CIVIL
STATE OF CALIFORNIA
05/29/2020

DESIGN	P WEBSTER
DRAWN	P WEBSTER
CHECKED	T LEWIS
APPROVED	M FISHER

WATERWORKS ENGINEERS
2260 Douglas Blvd, Suite 105 • Roseville, CA 95661 • 916-780-2888

CITY OF MORRO BAY
WATER RECLAMATION FACILITY
LIFT STATION AND OFFSITE PIPELINES

PLAN AND PROFILE
FORCE MAIN PLAN AND PROFILE
STA 33+00 TO STA 37+00

DATE	MAY 2020
PROJECT NUMBER	17-082
DRAWING NUMBER	05-PP-7
SHEET NUMBER	30

CONFORMED SET - DEC 2020

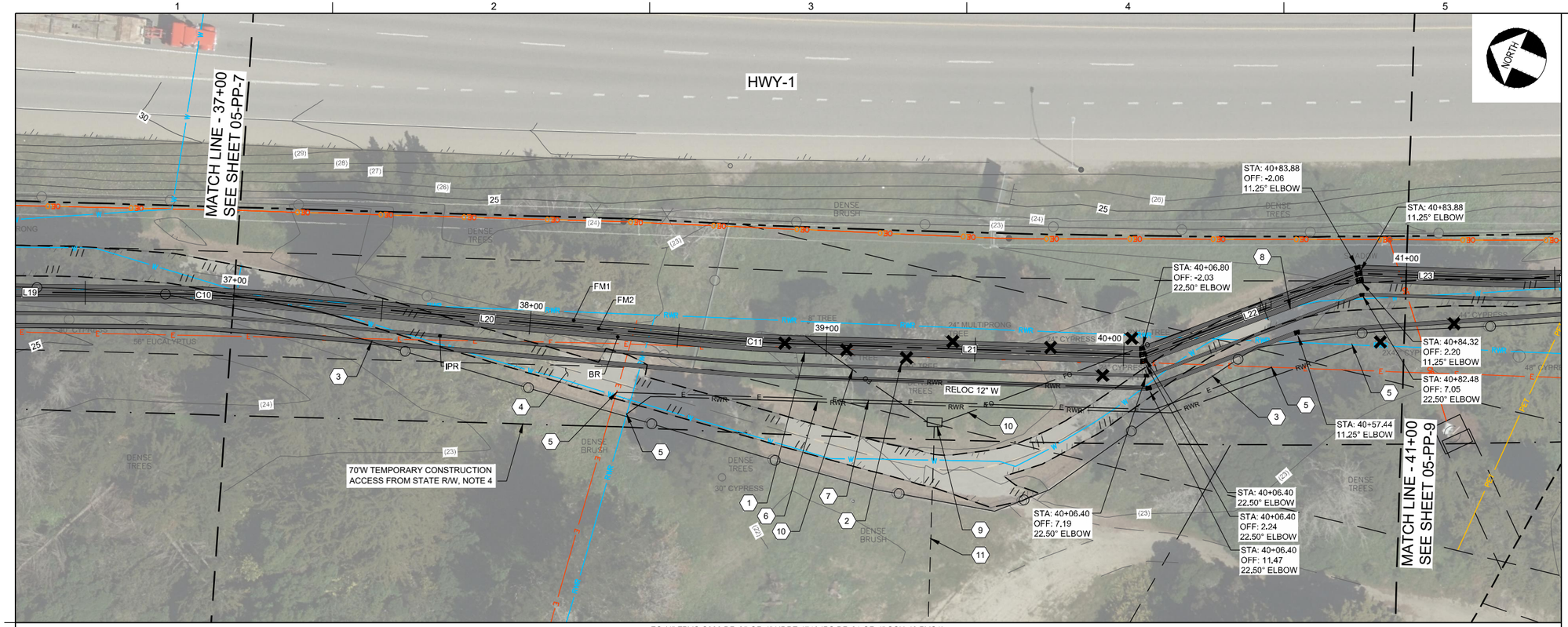

FO (4" FPVC C900 DR-25 OR 4" HDPE 4710 IPS DR-21 OR 4" SCH-40 PVC1)
FM1 (10" FPVC C900 DR-25 OR 12" HDPE 4710 IPS DR-17)
FM2 (16" FPVC C900 DR-25 OR 18" HDPE 4710 IPS DR-17)
BR (16" FPVC C900 DR-25 OR 18" HDPE 4710 IPS DR-17)
IPR (8" FPVC C900 DR-25 OR 10" HDPE 4710 IPS DR-17) IN CASING PER DET 1/05-CD-15
12"W (12" FPVC C900 DR-18) IN CASING PER DET 1/05-CD-15

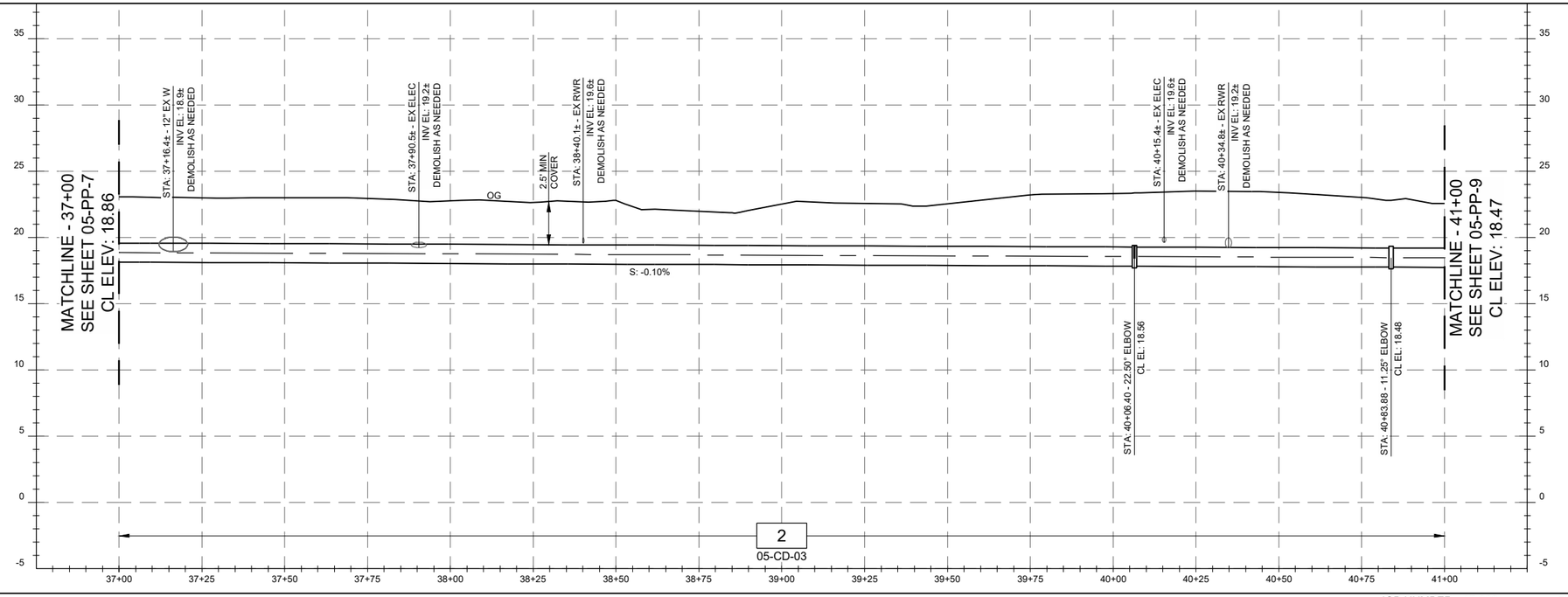

2
05-CD-03

NOTES:

1. THE CONTRACTOR SHALL COMPLY WITH THE GENERAL CIVIL NOTES AND PERMITTING GENERAL NOTES.
2. HORIZONTAL ALIGNMENT AND PROFILE VERTICAL CURVES HEREIN ARE DESIGNED WITH THE MIN BENDING RADIUS OF THE LARGEST PIPELINE ASSUMING FPVC IS SELECTED. SMALLER BEND RADII MAY BE FEASIBLE DEPENDING ON THE PIPELINE MATERIAL AND LOCATION. THE CONTRACTOR MAY SUBMIT FOR APPROVAL MINOR HORIZONTAL ALIGNMENT CHANGES AND PROFILE VERTICAL CHANGES SO AS IT REDUCES FIELD CONFLICTS, REDUCES FITTINGS WHERE POSSIBLE, IS NOT ZERO SLOPED, AND DOES NOT RESULT IN A HIGH-SPOT.
3. EXCAVATION WITHIN 6' OF PP SHALL BE COORDINATED WITH PGE AND MAY REQUIRE CONSTRUCTION PHASE SUPPORT.
4. CONTRACTOR SHALL PREPARE, SUBMIT FOR REVIEW, AND IMPLEMENT A SITE SECURITY PLAN WHEREBY THE VISTRA PRIVATE PROPERTY SHALL BE SECURED AT ALL TIMES VIA TEMPORARY FENCING AT THE LIMITS OF THE TEMPORARY CONSTRUCTION EASEMENT.
5. TREES NOT MARKED FOR REMOVAL WITHIN THE TEMPORARY CONTRUCTION EASEMENT LIMITS AND OVER 6" DBH SHALL BE PROTECTED IN PLACE AND MAY BE TRIMMED PER THE PROJECT ARBORISTS RECOMMENDATIONS. TREES SMALLER THAN 6" DBH MAY BE REMOVED BY THE CONTRACTOR AS PART OF CLEARING AND GRUBBING OPERATIONS WITHIN TEMPORARY CONSTRUCTION ACCESS LIMITS IN COORDINATION WITH PROJECT BIOLOGIST AND ARBORIST. IF DELINEATED, ENVIRONMENTALLY SENSITIVE AREAS SHALL BE CORDONED OFF PER BIOLOGIST'S RECOMMENDATIONS.

CONSTRUCTION KEY NOTES:

(1) INSTALL WRF OFFSITE PIPELINES, VALVES, AND APPURTENANCES PER HORIZONTAL PLAN AND VERTICAL PROFILE. ALIGNMENT IS CL OF FM2 UNLESS OTHERWISE NOTED. ORDER, PLACEMENT, AND REQUIRED CLEARANCES SHALL BE DETERMINED PER SPECIFIED TRENCH DETAIL UNDER PROFILE. SIZE & CLASS OF CARRIER AND/OR CASING PIPE MATERIALS ARE LISTED SCHEMATICALLY ABOVE PROFILE.

(2) TREE REMOVAL, TYP OF 10. SEE NOTE 5.

(3) REPLACE 200-LF 6'-0" CHAIN LINK FENCE WITH BARBED WIRE 45-DEG ARM PER (2800) REUSE AND REINSTALL EXISTING VISTRA ACCESS GATES WHERE PRESENT.

(4) REPLACE 415-LF EX BIKE PATH PER DETAIL 1/05-CD-10.

(5) HIGH PRIORITY UTILITY VERIFICATION REQUIRED, TYP OF 4.

(6) RELOCATE 250-LF 4" ACP RWR (4" FPVC C900 DR-25 OR 4" HDPE 4710 IPS DR-11). COORDINATE SHUTDOWN AND TIE-IN WITH CONSTRUCTION MANAGER. UTILIZE AND ADAPT TRENCH DET 2/05-CD-09. TIE IN TO ACP PIPE WITH DIP COUPLING TRANSITION. VERIFY CONNECTION.

(7) RELOCATE 220-LF ELECTRICAL CONDUIT (4" FPVC C900 DR-25 OR 4" HDPE 4710 IPS DR-21 OR SCH-40 PVC1) AND ELECTRICAL CABLE (MATCH EX NUMBER AND GAUGE). COORDINATE SHUTDOWN AND TIE-IN WITH CONSTRUCTION MANAGER. UTILIZE AND ADAPT TRENCH DETAIL 2/05-CD-09.

(8) 12"PVC W TO BE ABANDONED AND FILLED WITH TYPE 2 LCC OR DEMOLISHED AS NEEDED IN CONJUNCTION WITH APPROVED BYPASS PLAN.

(9) INSTALL FIBER PULLBOX PER DWG 00-E-04/VLT SIZE S534.

(10) WHERE FO DIVERGES FROM MAIN ALIGNMENT INSTALL PER DET 1/05-CD-09. INSTALL IN CASING PER DET 1/05-CD-15 FOR SHALLOW COVER MITIGATION.

(11) 400-LF 4" FO CONDUIT TO FUTURE INJECTION WELL SITE. ALIGNMENT TO BE DETERMINED BY CONSTRUCTION MANAGER AFTER PROJECT COMMENCEMENT. MATCH MATERIAL OF MAIN ALIGNMENT FO CONDUIT. ASSUME 20'W CONSTRUCTION ACCESS CORRIDOR AND TRENCH DETAIL 1/05-CD-09. RUN CONDUIT TO VERIFIED LOCATION OF WELL PUMP CONTROLS. STUB AND CAP CONDUIT NEAR WELL CONTROLS.

20 0 20 40 FEET
HORIZ SCALE 1"=20'

5 0 5 10 FEET
VERT SCALE 1"=5'

REGISTERED PROFESSIONAL ENGINEER
MICHAEL P. PYLMAN
No. C67194
CIVIL
STATE OF CALIFORNIA
05/29/2020

DESIGN	P WEBSTER
DRAWN	P WEBSTER
CHECKED	T LEWIS
APPROVED	M FISHER

WATERWORKS ENGINEERS
2260 Douglas Blvd. Suite 105 • Roseville, CA 95661 • 916-780-9888

CITY OF MORRO BAY
WATER RECLAMATION FACILITY
LIFT STATION AND OFFSITE PIPELINES

PLAN AND PROFILE
FORCE MAIN PLAN AND PROFILE
STA 37+00 TO STA 41+00

DATE: MAY 2020
PROJECT NUMBER: 17-082
DRAWING NUMBER: 05-PP-8
SHEET NUMBER: 31

L:\CAD\PROJECTS\17-082 MORRO BAY PS AND PIPELINE_(S)\PROJECT FILES\DELIVERABLES\1782D-05PP108.DWG

JOB NUMBER: 17-082 FILENAME: 1782D-05PP108.DWG PLOT DATE: 05/23/20 PLOT TIME: 14:35:33

CONFORMED SET - DEC 2020

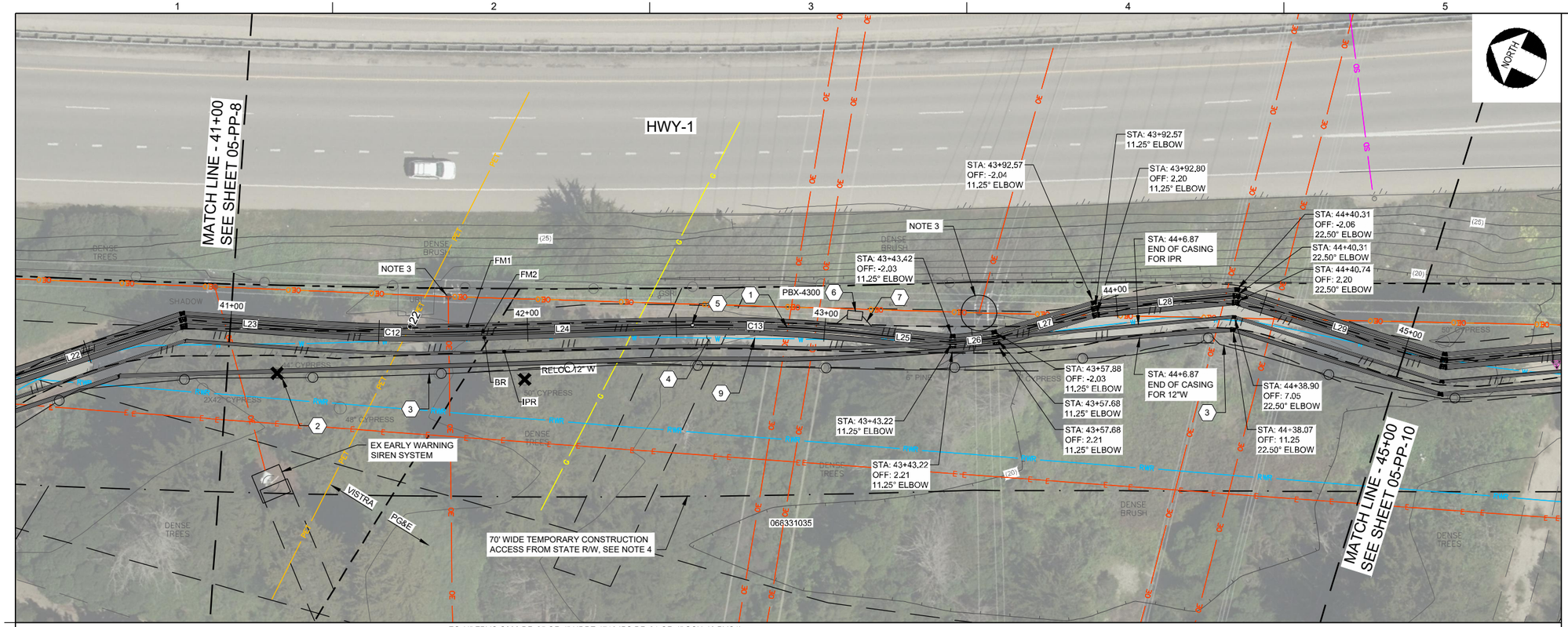

FO (4" FPVC C900 DR-25 OR 4" HDPE 4710 IPS DR-21 OR 4" SCH-40 PVC1)
FM1 (10" FPVC C900 DR-25 OR 12" HDPE 4710 IPS DR-17)
FM2 (16" FPVC C900 DR-25 OR 18" HDPE 4710 IPS DR-17)
BR (16" FPVC C900 DR-25 OR 18" HDPE 4710 IPS DR-17)
IPR (8" FPVC C900 DR-25 OR 10" HDPE 4710 IPS DR-17) IN CASING PER DET 1/05-CD-15 — IPR (8" FPVC C900 DR-25 OR 10" HDPE 4710 IPS DR-17)
12"W (12" FPVC C900 DR-18) IN CASING PER DET 1/05-CD-15 — 12"W (12" FPVC C900 DR-25)

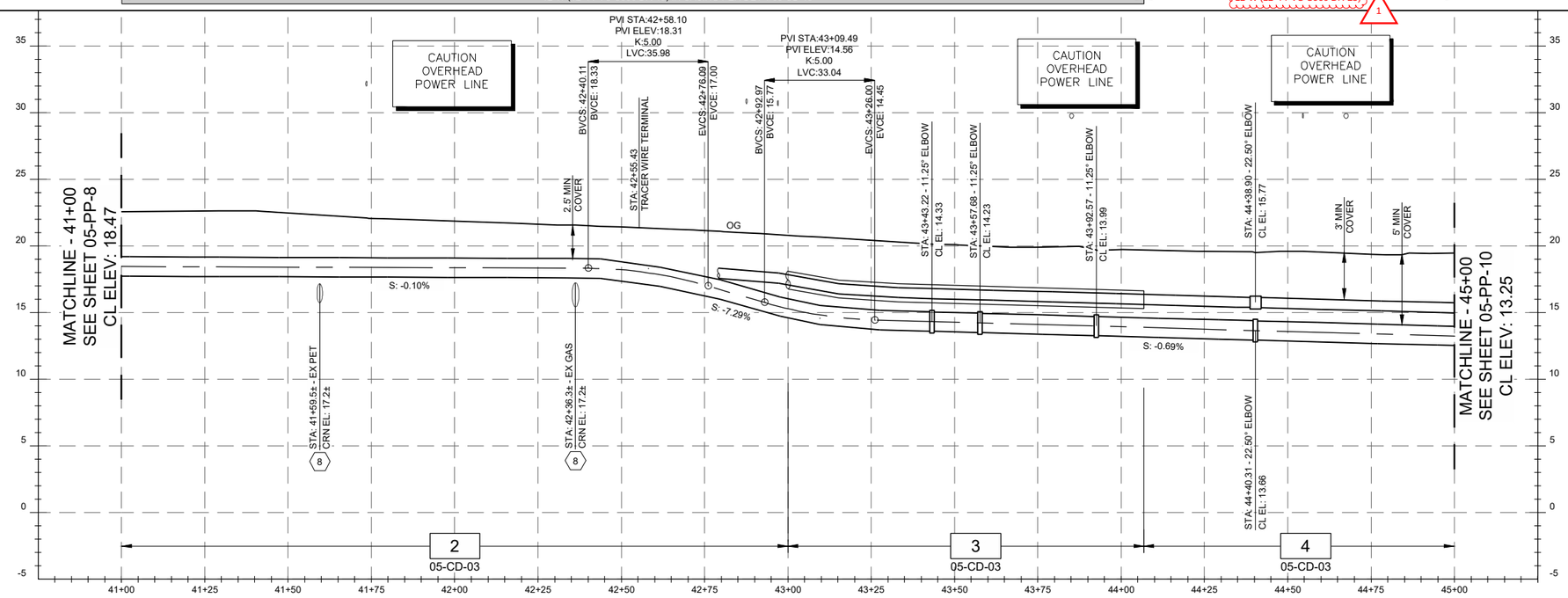

NOTES:

1. THE CONTRACTOR SHALL COMPLY WITH THE GENERAL CIVIL NOTES AND PERMITTING GENERAL NOTES.
2. HORIZONTAL ALIGNMENT AND PROFILE VERTICAL CURVES HEREIN ARE DESIGNED WITH THE MIN BENDING RADIUS OF THE LARGEST PIPELINE ASSUMING FPVC IS SELECTED. SMALLER BEND RADII MAY BE FEASIBLE DEPENDING ON THE PIPELINE MATERIAL AND LOCATION. THE CONTRACTOR MAY SUBMIT FOR APPROVAL MINOR HORIZONTAL ALIGNMENT CHANGES AND PROFILE VERTICAL CHANGES SO AS IT REDUCES FIELD CONFLICTS, REDUCES FITTINGS WHERE POSSIBLE, IS NOT ZERO SLOPED, AND DOES NOT RESULT IN A HIGH-SPOT.
3. EXCAVATION WITHIN 6' OF PP SHALL BE COORDINATED WITH PGE AND MAY REQUIRE CONSTRUCTION PHASE SUPPORT.
4. CONTRACTOR SHALL PREPARE, SUBMIT FOR REVIEW, AND IMPLEMENT A SITE SECURITY PLAN WHEREBY THE PGE PRIVATE PROPERTY SHALL BE SECURED AT ALL TIMES VIA TEMPORARY FENCING AT THE LIMITS OF THE TEMPORARY CONSTRUCTION EASEMENT.
5. TREES NOT MARKED FOR REMOVAL WITHIN THE TEMPORARY CONTRUCTION EASEMENT LIMITS AND OVER 6" DBH SHALL BE PROTECTED IN PLACE AND MAY BE TRIMMED PER THE PROJECT ARBORISTS RECOMMENDATIONS. TREES SMALLER THAN 6" DBH MAY BE REMOVED BY THE CONTRACTOR AS PART OF CLEARING AND GRUBBING OPERATIONS WITHIN TEMPORARY CONSTRUCTION ACCESS LIMITS IN COORDINATION WITH PROJECT BIOLOGIST AND ARBORIST. IF DELINEATED, ENVIRONMENTALLY SENSITIVE AREAS SHALL BE CORDONED OFF PER BIOLOGIST'S RECOMMENDATIONS.

CONSTRUCTION KEY NOTES:

1. INSTALL WRF OFFSITE PIPELINES, VALVES, AND APPURTENANCES PER HORIZONTAL PLAN AND VERTICAL PROFILE. ALIGNMENT IS CL OF FM2 UNLESS OTHERWISE NOTED. ORDER, PLACEMENT, AND REQUIRED CLEARANCES SHALL BE DETERMINED PER SPECIFIED TRENCH DETAIL UNDER PROFILE. SIZE & CLASS OF CARRIER AND/OR CASING PIPE MATERIALS ARE LISTED SCHEMATICALLY ABOVE PROFILE.
2. TREE REMOVAL, TYP OF 2. SEE NOTE 5.
3. REPLACE 405-LF 6'-0" CHAIN LINK FENCE WITH BARBED WIRE 45-DEG ARM PER (2800) REUSE AND REINSTALL EX VISTRA ACCESS GATES WHERE PRESENT.
4. REPLACE 405-LF EX BIKE PATH PER DETAIL 1/05-CD-10
5. INSTALL TERMINAL TRACER WIRE (2060) LOCATED ON CL OF FM2.
6. INSTALL FIBER PULLBOX PER DWG 00-E-04/VLT SIZE S534.
7. WHERE FO DIVERGES FROM MAIN ALIGNMENT INSTALL PER DET 1/05-CD-09.
8. GAS (PGE) AND PETROLUEM (VISTRA) CROSSING. CONTRACTOR TO SUBMIT PIPE SUPPORT PLAN TO CONSTRUCTION MANAGER AND UTILITY OWNERS.
9. 12" PVC W TO BE ABANDONED AND FILLED WITH TYPE 2 LCC OR DEMOLISHED AS NEEDED IN CONJUNCTION WITH APPROVED BYPASS PLAN.

POTHOLING RESULTS:

EXISTING POTHOLING LOCATIONS AND RESULTS ARE APPROXIMATE, NOT SURVEYED, AND DO NOT PRECLUDE THE CONTRACTOR'S SOLE RESPONSIBILITY TO COMPLY WITH UTILITY VERIFICATION REQUIREMENTS.

(22) UNPAVED, 60" CVR, 76" DEEP, PET

20 0 20 40 FEET
HORIZ SCALE 1"=20'
5 0 5 10 FEET
VERT SCALE 1"=5'

REGISTERED PROFESSIONAL ENGINEER
RAFAEL G. MEJIA
No. C87194
CIVIL
STATE OF CALIFORNIA
05/29/2020

DESIGN P WEBSTER
DRAWN P WEBSTER
CHECKED T LEWIS
APPROVED M FISHER

WATERWORKS ENGINEERS
2260 Douglas Blvd., Suite 105 • Roseville, CA 95661 • 916-780-9888

CITY OF MORRO BAY
WATER RECLAMATION FACILITY
LIFT STATION AND OFFSITE PIPELINES

PLAN AND PROFILE
FORCE MAIN PLAN AND PROFILE
STA 41+00 TO STA 45+00

DATE MAY 2020
PROJECT NUMBER 17-082
DRAWING NUMBER 05-PP-9
SHEET NUMBER 32

CONFORMED SET - DEC 2020

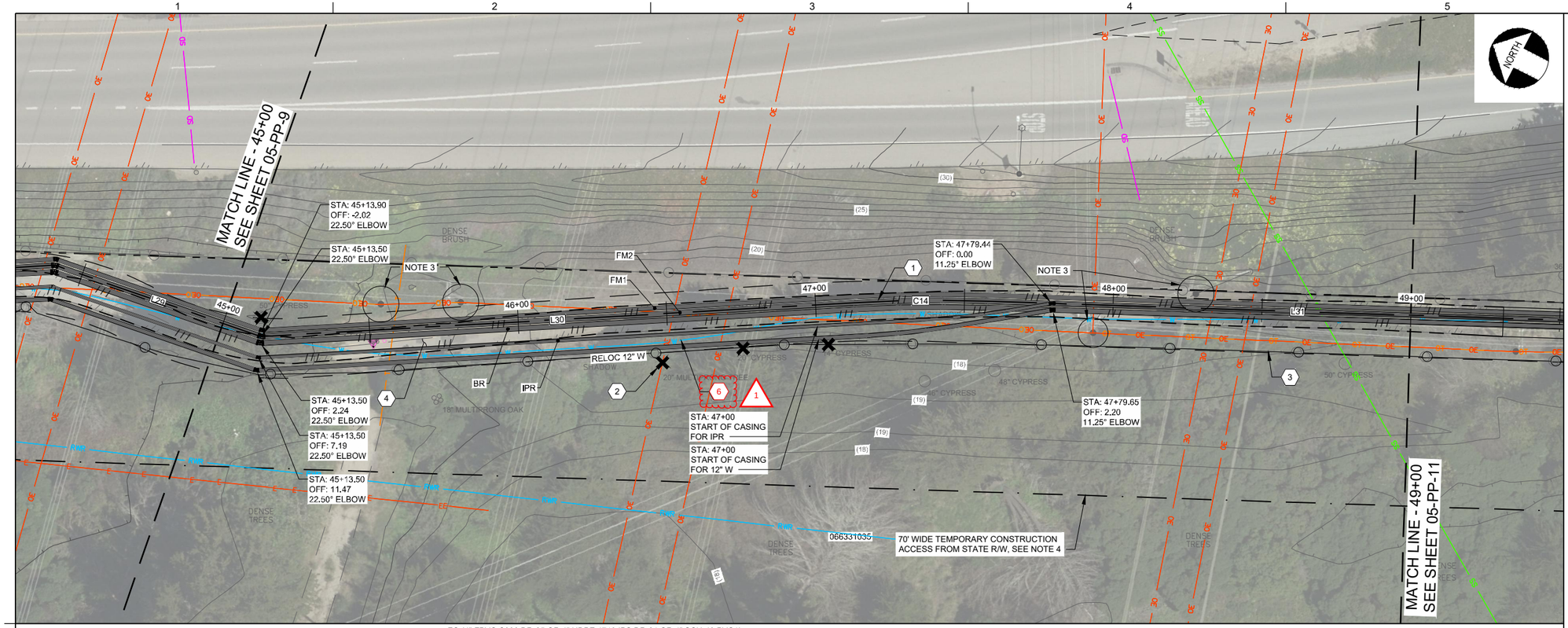

FO (4" FPVC C900 DR-25 OR 4" HDPE 4710 IPS DR-21 OR 4" SCH-40 PVC1)
FM1 (10" FPVC C900 DR-25 OR 12" HDPE 4710 IPS DR-17)
FM2 (16" FPVC C900 DR-25 OR 18" HDPE 4710 IPS DR-17)
BR (16" FPVC C900 DR-25 OR 18" HDPE 4710 IPS DR-17)
IPR (8" FPVC C900 DR-25 OR 10" HDPE 4710 IPS DR-17) — IPR (8" FPVC C900 DR-25 OR 10" HDPE 4710 IPS DR-17) IN CASING PER DET 1/05-CD-15
12"W (12" FPVC C900 DR-18) — 12"W (12" FPVC C900 DR-18) IN CASING PER DET 1/05-CD-15

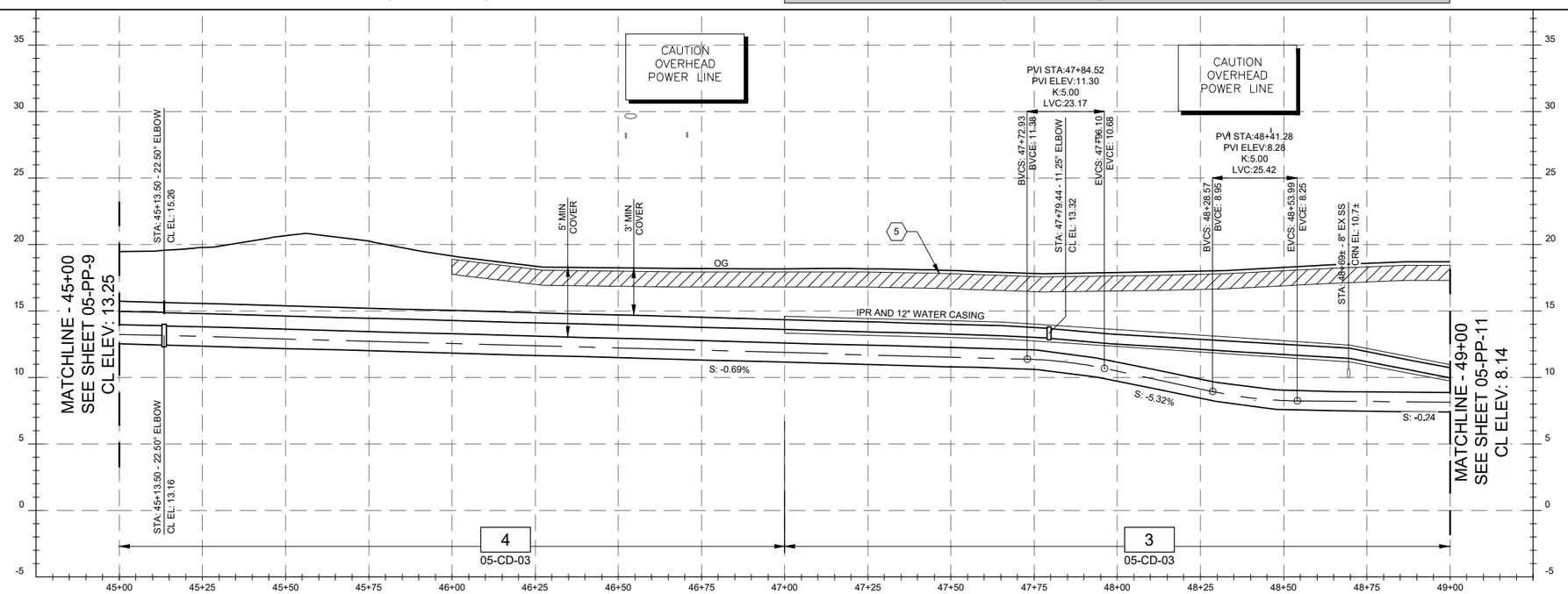

NOTES:

1. THE CONTRACTOR SHALL COMPLY WITH THE GENERAL CIVIL NOTES AND PERMITTING GENERAL NOTES.
2. HORIZONTAL ALIGNMENT AND PROFILE VERTICAL CURVES HEREIN ARE DESIGNED WITH THE MIN BENDING RADIUS OF THE LARGEST PIPELINE ASSUMING FPVC IS SELECTED. SMALLER BEND RADII MAY BE FEASIBLE DEPENDING ON THE PIPELINE MATERIAL AND LOCATION. THE CONTRACTOR MAY SUBMIT FOR APPROVAL MINOR HORIZONTAL ALIGNMENT CHANGES AND PROFILE VERTICAL CHANGES SO AS IT REDUCES FIELD CONFLICTS, REDUCES FITTINGS WHERE POSSIBLE, IS NOT ZERO SLOPED, AND DOES NOT RESULT IN A HIGH-SPOT.
3. EXCAVATION WITHIN 6' OF PP SHALL BE COORDINATED WITH PGE AND MAY REQUIRE CONSTRUCTION PHASE SUPPORT.
4. CONTRACTOR SHALL PREPARE, SUBMIT FOR REVIEW, AND IMPLEMENT A SITE SECURITY PLAN WHEREBY THE PGE PRIVATE PROPERTY SHALL BE SECURED AT ALL TIMES VIA TEMPORARY FENCING AT THE LIMITS OF THE TEMPORARY CONSTRUCTION EASEMENT.
5. TREES NOT MARKED FOR REMOVAL WITHIN THE TEMPORARY CONTRUCTION EASEMENT LIMITS AND OVER 6" DBH SHALL BE PROTECTED IN PLACE AND MAY BE TRIMMED PER THE PROJECT ARBORISTS RECOMMENDATIONS. TREES SMALLER THAN 6" DBH MAY BE REMOVED BY THE CONTRACTOR AS PART OF CLEARING AND GRUBBING OPERATIONS WITHIN TEMPORARY CONSTRUCTION ACCESS LIMITS IN COORDINATION WITH PROJECT BIOLOGIST AND ARBORIST. IF DELINEATED, ENVIRONMENTALLY SENSITIVE AREAS SHALL BE CORDONED OFF PER BIOLOGIST'S RECOMMENDATIONS.

CONSTRUCTION KEY NOTES:

(1) INSTALL WRF OFFSITE PIPELINES, VALVES, AND APPURTENANCES PER HORIZONTAL PLAN AND VERTICAL PROFILE. ALIGNMENT IS CL OF FM2 UNLESS OTHERWISE NOTED. ORDER, PLACEMENT, AND REQUIRED CLEARANCES SHALL BE DETERMINED PER SPECIFIED TRENCH DETAIL UNDER PROFILE. SIZE & CLASS OF CARRIER AND/OR CASING PIPE MATERIALS ARE LISTED SCHEMATICALLY ABOVE PROFILE.

(2) TREE REMOVAL, TYP OF 4. SEE NOTE 5.

(3) REPLACE 405-LF 6'-0" CHAIN LINK FENCE WITH BARBED WIRE 45-DEG ARM PER 2800 REUSE AND REINSTALL EX VISTRA ACCESS GATES WHERE PRESENT.

(4) REPLACE 405-LF EX BIKE PATH PER DETAIL 1/05-CD-10.

(5) INSTALL 300-LF OF BIKE PATH SUBGRADE DRAIN ROCK REINFORCEMENT PER DET 1 OR 2 /05-CD-10

(6) 12"PVC W TO BE ABANDONED AND FILLED WITH TYPE 2 LCC OR DEMOLISHED AS NEEDED IN CONJUNCTION WITH APPROVED BYPASS PLAN.

20 0 20 40 FEET
HORIZ SCALE 1"=20'
5 0 5 10 FEET
VERT SCALE 1"=5'

REGISTERED PROFESSIONAL ENGINEER
PAUL MICHAEL WEBSTER
No. C67194
CIVIL
STATE OF CALIFORNIA
05/29/2020

DESIGN	P WEBSTER
DRAWN	P WEBSTER
CHECKED	T LEWIS
APPROVED	M FISHER

WATERWORKS ENGINEERS
2260 Douglas Blvd., Suite 105 • Roseville, CA 95661 • 916-780-9888

CITY OF MORRO BAY
WATER RECLAMATION FACILITY
LIFT STATION AND OFFSITE PIPELINES

PLAN AND PROFILE
FORCE MAIN PLAN AND PROFILE
STA 45+00 TO STA 49+00

DATE	MAY 2020
PROJECT NUMBER	17-082
DRAWING NUMBER	05-PP-10
SHEET NUMBER	33

L:\CAD\PROJECTS\17-082 MORRO BAY PS AND PIPELINE_(S)\PROJECT FILES\DELIVERABLES\1782D-05PP110.DWG

JOB NUMBER: 17-082 FILENAME: 1782D-05PP110.DWG PLOT DATE: 05/23/20 PLOT TIME: 14:36:54

CONFORMED SET - DEC 2020

CALTRANS SHEET NOTES

1. CONTRACTOR SHALL PROVIDE SHORING PLANS AND CALCULATIONS FOR ALL EXCAVATIONS GREATER THAN FIVE (5') SHORING PLANS SHALL BE SIGNED AND STAMPED BY A PROFESSIONAL CIVIL ENGINEER REGISTERED IN THE STATE OF CALIFORNIA.
2. PAVEMENT STRIPING/MARKINS SHALL BE REPLACE IN KIND IN ACCORDANCE WITH CALTRANS STANDARDS.
3. SIDEWALKS AND CURB RAMPS IMPACTED BY CONSTRUCTION SHALL BE REPLACED TO CURRETN CALTRANS STANDARDS.
4. DURING NON-WORKING HOURS, OPEN TRENCHES SHALL BE COVERED BACKFILLED, OR PROTECTED.
5. AT ANY LOCATION WHERE THE SPEED LIMIT IS 45 MPH OR GREATER, STEEL PLATING SHALL BE GROUND IN, FLUSH WITH THE ROADWAY.
6. CONTRACTOR SHALL COORDINATE WORK IN A MANNER TO KEEP THE BIKE PATH OPEN AS MUCH AS POSSIBLE.
7. CONTRACTOR SHALL OBTAIN A CALTRANS DOUBLE PERMIT PRIOR TO T HE WORK.
8. TWO WEEKS PRIOR TO START OF WORK CONTRACTOR SHALL CONTACT THE CALTRANS ENCROACHMENT PERMIT INSPECTOR (PETER MUTUTWA, 805-276-1570).
9. JACKING AND RECEIVING SHAFTS SHALL CONFORM TO CALTRANS ENCROACHMENT PERMITS MANUAL, SECTION 623.15 AND ADEQUATELY SHORED TO ENSURE AGAINST GROUND MOVEMENT AND TO SAFEGUARD EX SURFACE IMPROVEMENTS AND SUBSTRUCTURES.
10. ALL SHAFTS SHALL BE FENCED AND/OR TYPE-K BARRIERPLACED FOR PROTECTION OR AS OTHERWISE DIRECTED BY CALTRANS REPRESENTATIVE. SHAFTS LEFT OPEN OVERNIGHT SHALL HAVE 6 FT HIGH FENCE WITH PANEL SECTIONS SECURELY FASTENED TOGETHER FOR PEDESTRIAN SAFETY. REFLECTORS SHALL BE SECURED TO THE SIDES OF FENCE THAT FACE TRAFFIC.

GEOTECHNICAL INSTRUMENTATION

- (G) GMMP PER DET 3/05-CD-15, TYP OF 2
- (S) SSMP PER DET 5/05-CD-15

POTHOLING RESULTS:

EXISTING POTHOLING LOCATIONS AND RESULTS ARE APPROXIMATE, NOT SURVEYED, AND DO NOT PRECLUDE THE CONTRACTOR'S SOLE RESPONSIBILITY TO COMPLY WITH UTILITY VERIFICATION REQUIREMENTS.

(23.) 6" CONCRETE, 47" CVR, 12"W

20 0 20 40 FEET
HORIZ SCALE 1"=20'
5 0 5 10 FEET
VERT SCALE 1"=5'

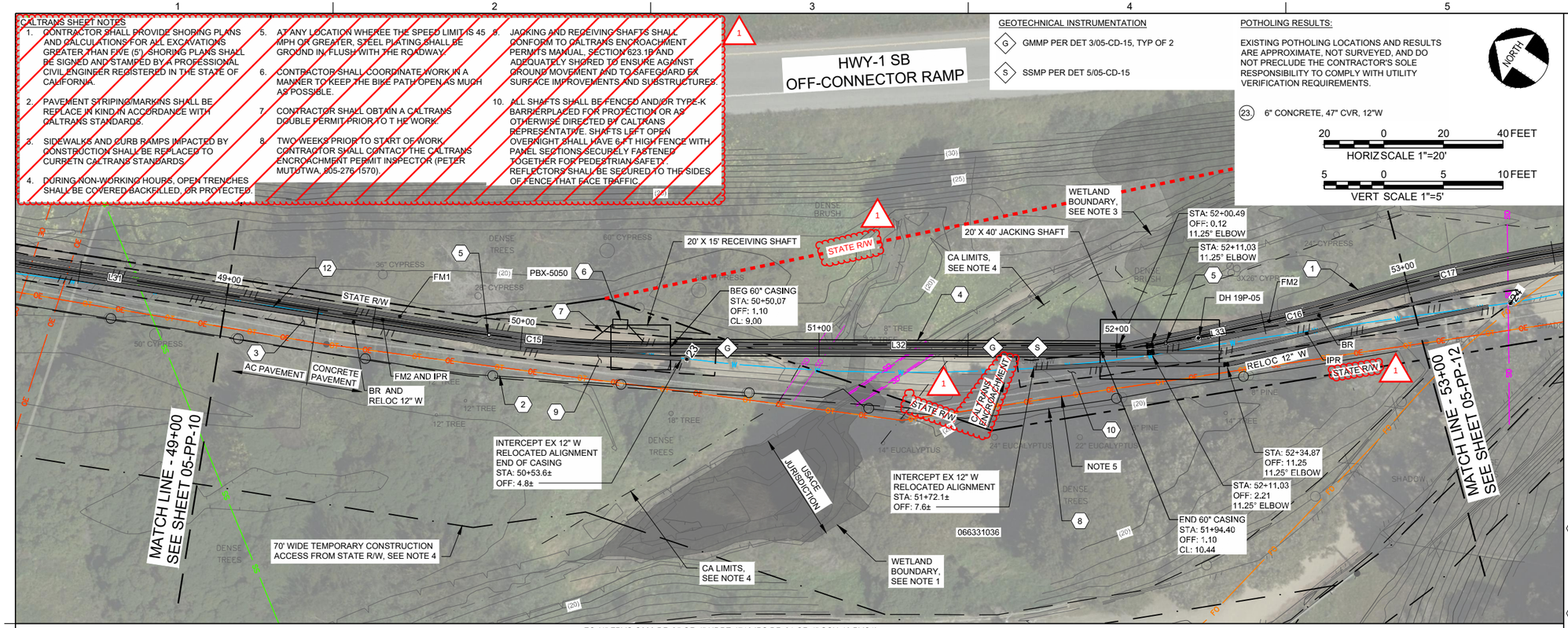

FO (4" FPVC C900 DR-25 OR 4" HDPE 4710 IPS DR-21 OR 4" SCH-40 PVC1)
FM1 (10" FPVC C900 DR-25 OR 12" HDPE 4710 IPS DR-17)
FM2 (16" FPVC C900 DR-25 OR 18" HDPE 4710 IPS DR-17)
BR (16" FPVC C900 DR-25 OR 18" HDPE 4710 IPS DR-17)
IPR (8" FPVC C900 DR-25 OR 10" HDPE 4710 IPS DR-17) IN CASING PER DET 1/05-CD-15
IPR (8" FPVC C900 DR-25 OR 10" HDPE 4710 IPS DR-17)
12" W (12" FPVC C900 DR-18) IN CASING PER DET 1/05-CD-15
12" W (12" FPVC C900 DR-18)

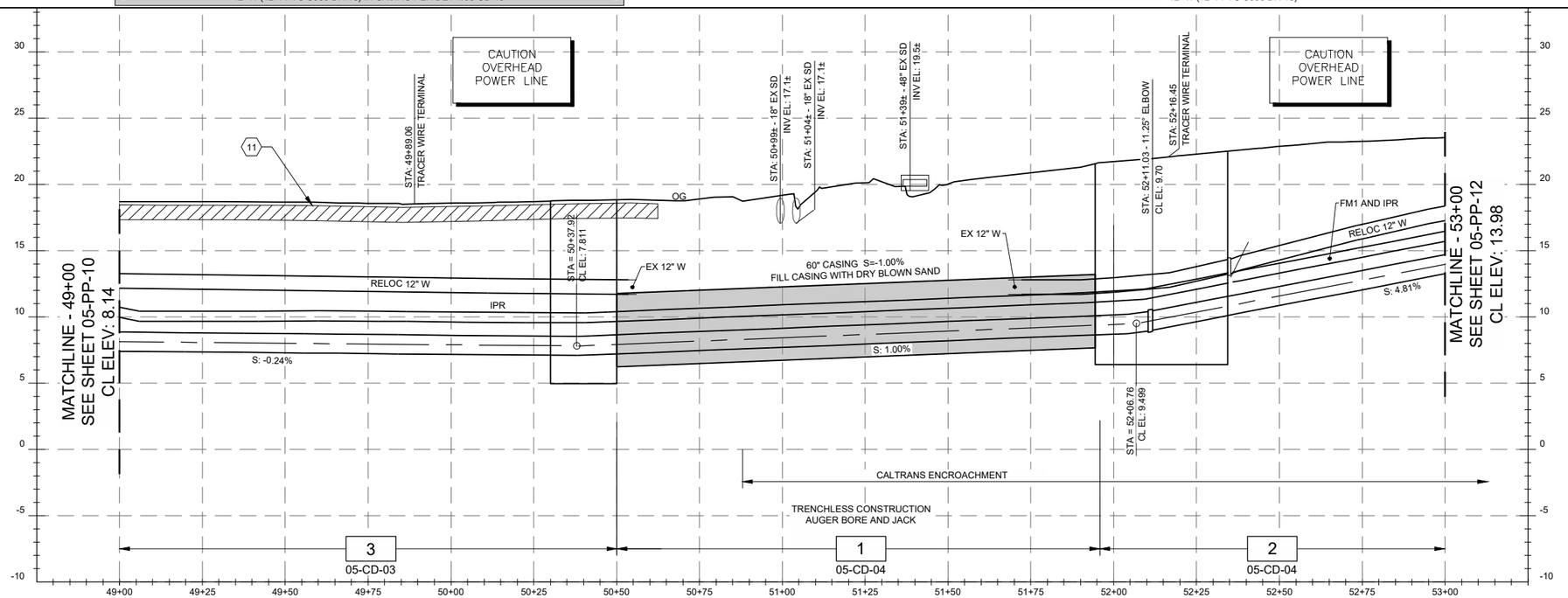

NOTES:

1. THE CONTRACTOR SHALL COMPLY WITH THE GENERAL CIVIL NOTES AND PERMITTING GENERAL NOTES.
2. HORIZONTAL ALIGNMENT AND PROFILE VERTICAL CURVES HEREIN ARE DESIGNED WITH THE MIN BENDING RADIUS OF THE LARGEST PIPELINE ASSUMING FPVC IS SELECTED. SMALLER BEND RADII MAY BE FEASIBLE DEPENDING ON THE PIPELINE MATERIAL AND LOCATION. THE CONTRACTOR MAY SUBMIT FOR APPROVAL MINOR HORIZONTAL ALIGNMENT CHANGES AND PROFILE VERTICAL CHANGES SO AS IT REDUCES FIELD CONFLICTS, REDUCES FITTINGS WHERE POSSIBLE, IS NOT ZERO SLOPED, AND DOES NOT RESULT IN A HIGH-SPOT.
3. WETLAND BOUNDARY IS REPRESENTATIVE OF CDFW/RWQCB/CCC JURISDICTION AS DELINEATED IN THE PROJECT BIOLOGICAL RESOURCES ASSESSMENT (KMA 2019).
4. CONSTRUCTION ACTIVITY (CA) LIMITS OFFSET 3' FROM EDGE OF WETLAND BOUNDARY. GROUND DISTURBING ACTIVITIES SHALL NOT EXTEND PAST CA LIMITS. SWPPP BMPS SHALL BE INSTALLED PER APPROVED SWPPP PLAN AT A MINIMUM ALONG CA LIMITS.
5. CONTRACTOR SHALL COORDINATE WITH PGE THE POTENTIAL SHUTDOWN OF OVERHEAD ELECTRIC TO FACILITATE SAFE MOB/DEMOB FOR LARGE EQUIPMENT SUCH AS A CRANE, IF UTILIZED.
6. CONTRACTOR SHALL PREPARE, SUBMIT FOR REVIEW, AND IMPLEMENT A SITE SECURITY PLAN WHEREBY THE PG&E PRIVATE PROPERTY SHALL BE SECURED AT ALL TIMES VIA TEMPORARY FENCING AT THE LIMITS OF THE TEMPORARY CONSTRUCTION EASEMENT.
7. TREES NOT MARKED FOR REMOVAL WITHIN THE TEMPORARY CONSTRUCTION EASEMENT LIMITS AND OVER 6" DBH SHALL BE PROTECTED IN PLACE AND MAY BE TRIMMED PER THE PROJECT ARBORISTS RECOMMENDATIONS. TREES SMALLER THAN 6" DBH MAY BE REMOVED BY THE CONTRACTOR AS PART OF CLEARING AND GRUBBING OPERATIONS WITHIN TEMPORARY CONSTRUCTION ACCESS LIMITS IN COORDINATION WITH PROJECT BIOLOGIST AND ARBORIST. IF DELINEATED, ENVIRONMENTALLY SENSITIVE AREAS SHALL BE CORDONED OFF PER BIOLOGIST'S RECOMMENDATIONS.

CONSTRUCTION KEY NOTES:

1. INSTALL WRF OFFSITE PIPELINES, VALVES, AND APPURTENANCES PER HORIZONTAL PLAN AND VERTICAL PROFILE. ALIGNMENT IS CL OF FM2 UNLESS OTHERWISE NOTED. ORDER, PLACEMENT, AND REQUIRED CLEARANCES SHALL BE DETERMINED PER SPECIFIED TRENCH DETAIL UNDER PROFILE. SIZE & CLASS OF CARRIER AND/OR CASING PIPE MATERIALS ARE LISTED SCHEMATICALLY ABOVE PROFILE.
2. REPLACE 200-LF 6'-0" CHAIN LINK FENCE WITH BARBED WIRE 45-DEG ARM PER (2800) REUSE AND REINSTALL EX PGE ACCESS GATES WHERE PRESENT.
3. REPLACE 32-LF EX BIKE PATH PER DETAIL 1/05-CD-10
4. INSTALL 60" DIA STEEL CASING AND ASSOCIATED CARRIER PIPES VIA AUGER BORE AND JACK TRENCHLESS CONSTRUCTION. SHAFT LIMITS SHOWN HEREIN ARE FOR REFERENCE ONLY. CONTRACTOR RESPONSIBLE FOR SIZE AND CONFIGURATION OF SHAFTS TO MEET SELECTED MEANS AND METHODS.
5. INSTALL TRACER WIRE TERMINAL (2060) AND GROUND ROD (16410)
6. INSTALL FIBER PULLBOX PER DWG 00-E-04/VLT SIZE S534.
7. WHERE FO DIVERGES FROM MAIN ALIGNMENT INSTALL PER DET 1/05-CD-09
8. REPLACE 100-LF 6'-0" CHAIN LINK FENCE PER CALTRANS STD PLAN A85.
9. REPLACE 135-LF EX BIKE PATH PER DETAIL 2/05-CD-10
10. REPLACE 135-LF EX BIKE PATH PER DETAIL 2/05-CD-10
11. INSTALL 165-LF OF BIKE PATH SUBGRADE DRAIN ROCK REINFORCEMENT PER DET 1 OR 2 /05-CD-10
12. 12"PVC W TO BE ABANDONED AND FILLED WITH TYPE 2 LCC OR DEMOLISHED AS NEEDED IN CONJUNCTION WITH APPROVED BYPASS PLAN.

DESIGN P WEBSTER
DRAWN P WEBSTER
CHECKED T LEWIS
APPROVED M FISHER

WATERWORKS ENGINEERS
2260 Douglas Blvd. Suite 105 • Roseville, CA 95661 • 916-780-9888

CITY OF MORRO BAY
WATER RECLAMATION FACILITY LIFT STATION AND OFFSITE PIPELINES

PLAN AND PROFILE
FORCE MAIN PLAN AND PROFILE STA 49+00 TO STA 53+00

REGISTERED PROFESSIONAL ENGINEER MICHAEL P. FISHER No. C61794 CIVIL STATE OF CALIFORNIA
05/29/2020

DATE MAY 2020
PROJECT NUMBER 17-082
DRAWING NUMBER 05-PP-11
SHEET NUMBER 34

JOB NUMBER: 17-082 FILENAME: 1782D-05PP111.DWG PLOT DATE: 05/23/20 PLOT TIME: 14:37:27

L:\CAD\PROJECTS\17-082 MORRO BAY PS AND PIPELINE_(S)\PROJECT FILES\DELIVERABLES\1782D-05PP111.DWG

CONFORMED SET - DEC 2020

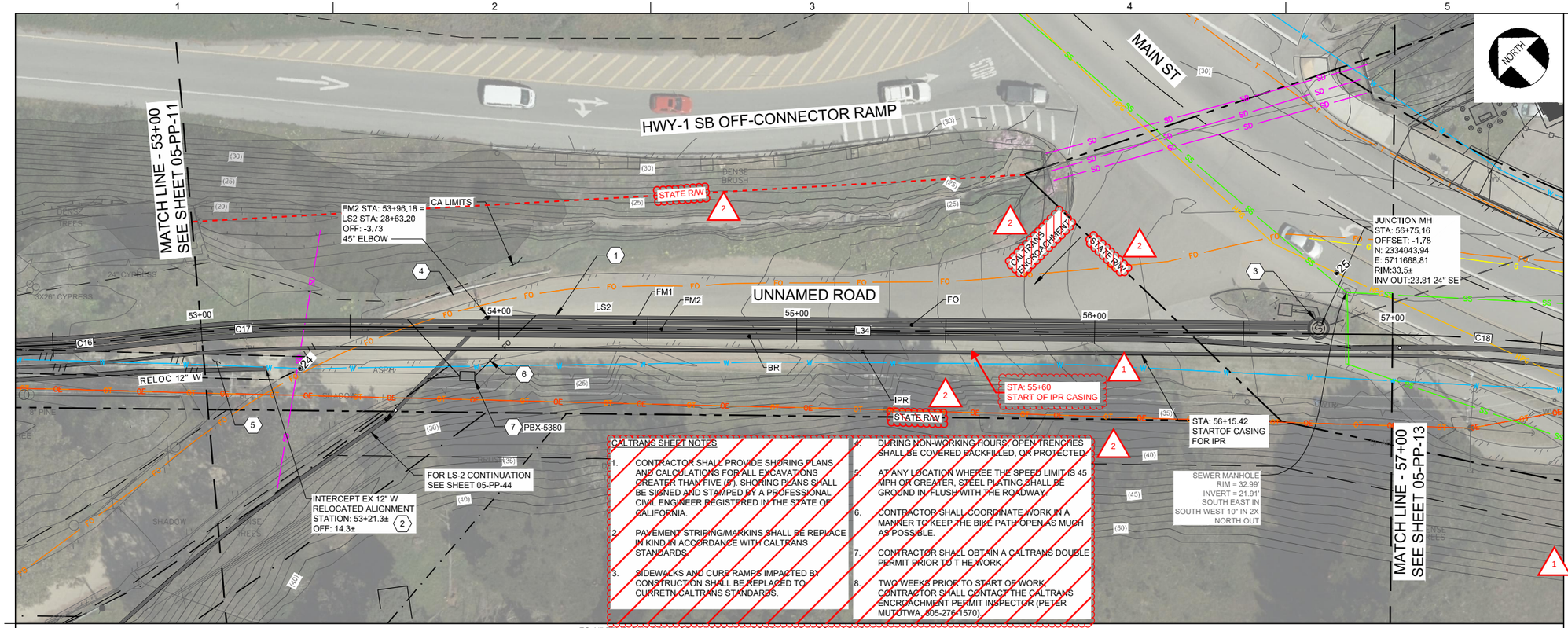

CALTRANS SHEET NOTES

1. CONTRACTOR SHALL PROVIDE SHORING PLANS AND CALCULATIONS FOR ALL EXCAVATIONS GREATER THAN FIVE (5') . SHORING PLANS SHALL BE SIGNED AND STAMPED BY A PROFESSIONAL CIVIL ENGINEER REGISTERED IN THE STATE OF CALIFORNIA.
2. PAVEMENT STRIPING/MARKINS SHALL BE REPLACE IN KIND IN ACCORDANCE WITH CALTRANS STANDARDS.
3. SIDEWALKS AND CURB RAMPS IMPACTED BY CONSTRUCTION SHALL BE REPLACED TO CURRETN CALTRANS STANDARDS.
4. DURING NON-WORKING HOURS, OPEN TRENCHES SHALL BE COVERED BACKFILLED, OR PROTECTED.
5. AT ANY LOCATION WHERE THE SPEED LIMIT IS 45 MPH OR GREATER, STEEL PLATING SHALL BE GROUND IN, FLUSH WITH THE ROADWAY.
6. CONTRACTOR SHALL COORDINATE WORK IN A MANNER TO KEEP THE BIKE PATH OPEN AS MUCH AS POSSIBLE.
7. CONTRACTOR SHALL OBTAIN A CALTRANS DOUBLE PERMIT PRIOR TO T HE WORK.
8. TWO WEEKS PRIOR TO START OF WORK, CONTRACTOR SHALL CONTACT THE CALTRANS ENCROACHMENT PERMIT INSPECTOR (PETER MUTOTWA, 805-276-1570).

NOTES:

1. THE CONTRACTOR SHALL COMPLY WITH THE GENERAL CIVIL NOTES AND PERMITTING GENERAL NOTES.
2. HORIZONTAL ALIGNMENT AND PROFILE VERTICAL CURVES HEREIN ARE DESIGNED WITH THE MIN BENDING RADIUS OF THE LARGEST PIPELINE ASSUMING FPVC IS SELECTED. SMALLER BEND RADII MAY BE FEASIBLE DEPENDING ON THE PIPELINE MATERIAL AND LOCATION. THE CONTRACTOR MAY SUBMIT FOR APPROVAL MINOR HORIZONTAL ALIGNMENT CHANGES AND PROFILE VERTICAL CHANGES SO AS IT REDUCES FIELD CONFLICTS, REDUCES FITTINGS WHERE POSSIBLE, IS NOT ZERO SLOPED, AND DOES NOT RESULT IN A HIGH-SPOT.
3. WETLAND BOUNDARY IS REPRESENTATIVE OF CDFW/RWQCB/CCC JURISDICTION AS DELINEATED IN THE PROJECT BIOLOGICAL RESOURCES ASSESSMENT (KMA 2019).
4. CONSTRUCTION ACTIVITY (CA) LIMITS OFFSET 3' FROM EDGE OF WETLAND BOUNDARY. GROUND DISTURBING ACTIVITIES SHALL NOT EXTEND PAST CA LIMITS. SWPPP BMPS SHALL BE INSTALLED PER APPROVED SWPPP PLAN AT A MINIMUM ALONG CA LIMITS.

CONSTRUCTION KEY NOTES:

1. INSTALL WRF OFFSITE PIPELINES, VALVES, AND APPURTENANCES PER HORIZONTAL PLAN AND VERTICAL PROFILE. ALIGNMENT IS CL OF FM2 UNLESS OTHERWISE NOTED. ORDER, PLACEMENT, AND REQUIRED CLEARANCES SHALL BE DETERMINED PER SPECIFIED TRENCH DETAIL UNDER PROFILE. SIZE & CLASS OF CARRIER AND/OR CASING PIPE MATERIALS ARE LISTED SCHEMATICALLY ABOVE PROFILE.
2. CONNECT RELOC 12"W TO EX 12"W PVC C900.
3. GRAVITY SEWER TO PS-B CONNECTION PER DWG 05-PP-45.
4. PROTECT GUARD RAIL IN PLACE.
5. REPLACE 35-LF EX BIKE PATH PER DET 2/05-CD-10
6. WHERE FO DIVERGES FROM MAIN ALIGNMENT INSTALL PER DET 1/05-CD-09
7. INSTALL FIBER PULLBOX PER DWG 00-E-04/VLT SIZE S534.

FO (4" FPVC C900 DR-25 OR 4" HDPE 4710 IPS DR-21 OR 4" SCH-40 PVC1)
LS2 (10" FPVC C900 DR-25 OR 12" HDPE 4710 IPS DR-17)
FM1 (10" FPVC C900 DR-25 OR 12" HDPE 4710 IPS DR-17)
FM2 (16" FPVC C900 DR-25 OR 18" HDPE 4710 IPS DR-17)
BR (16" FPVC C900 DR-25 OR 18" HDPE 4710 IPS DR-17)
IPR (8" FPVC C900 DR-25 OR 10" HDPE 4710 IPS DR-17)
12" W (12" FPVC C900 DR-18)
IPR (8" FPVC C900 DR-25 OR 10" HDPE 4710 IPS DR-17) IN CASING PER DET 1/05-CD-15

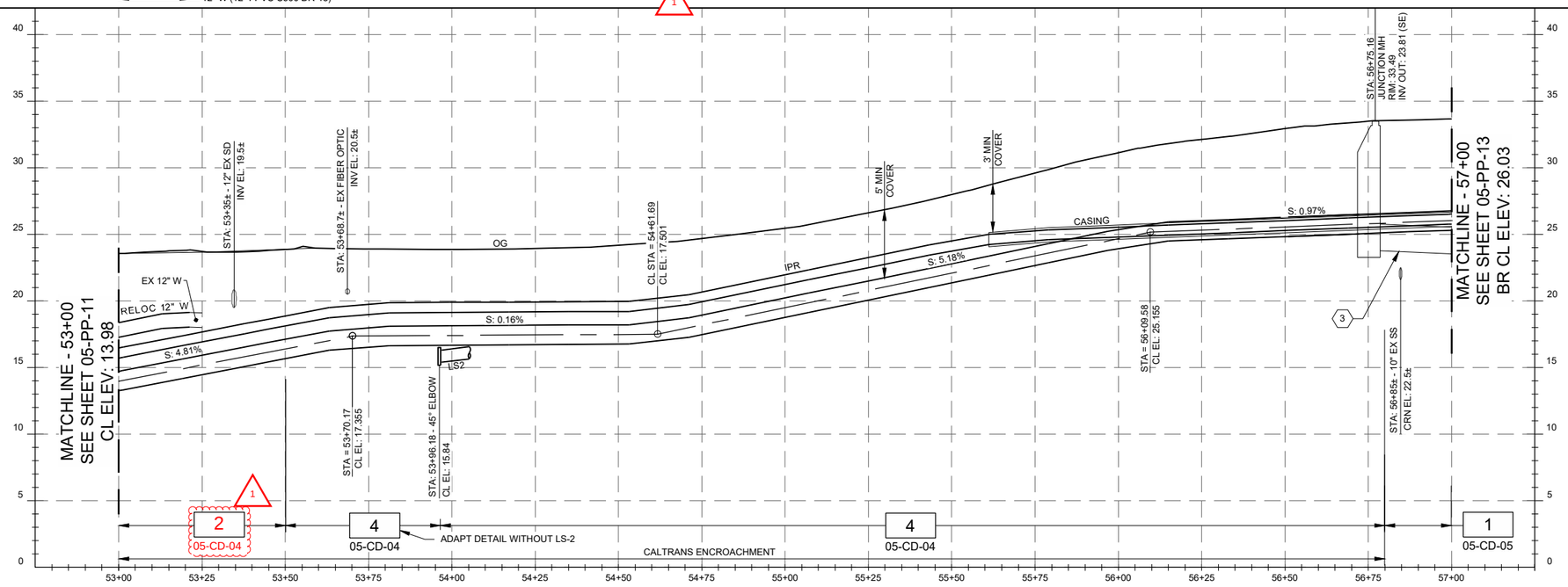

POTHOLING RESULTS:

EXISTING POTHOLING LOCATIONS AND RESULTS ARE APPROXIMATE, NOT SURVEYED, AND DO NOT PRECLUDE THE CONTRACTOR'S SOLE RESPONSIBILITY TO COMPLY WITH UTILITY VERIFICATION REQUIREMENTS.

24. 41" CVR, 12" W
25. 46" CVR, 16" HPG

20 0 20 40 FEET
HORIZ SCALE 1"=20'
5 0 5 10 FEET
VERT SCALE 1"=5'

REGISTERED PROFESSIONAL ENGINEER
RACHAEL PUTMAN
No. C67194
CIVIL
STATE OF CALIFORNIA
05/29/2020

DESIGN	P WEBSTER
DRAWN	P WEBSTER
CHECKED	T LEWIS
APPROVED	M FISHER

WATERWORKS ENGINEERS
2260 Douglas Blvd., Suite 105 • Roseville, CA 95661 • 916-780-9888

CITY OF MORRO BAY
WATER RECLAMATION FACILITY
LIFT STATION AND OFFSITE PIPELINES

PLAN AND PROFILE
FORCE MAIN PLAN AND PROFILE
STA 53+00 TO STA 57+00

DATE	MAY 2020
PROJECT NUMBER	17-082
DRAWING NUMBER	05-PP-12
SHEET NUMBER	35

L:\CAD\PROJECTS\17-082 MORRO BAY PS AND PIPELINE_(S)\PROJECT FILES\DELIVERABLES\1782D-05PP112.DWG

JOB NUMBER: 17-082 FILENAME: 1782D-05PP112.DWG PLOT DATE: 05/23/20 PLOT TIME: 14:37:55

CONFORMED SET - DEC 2020

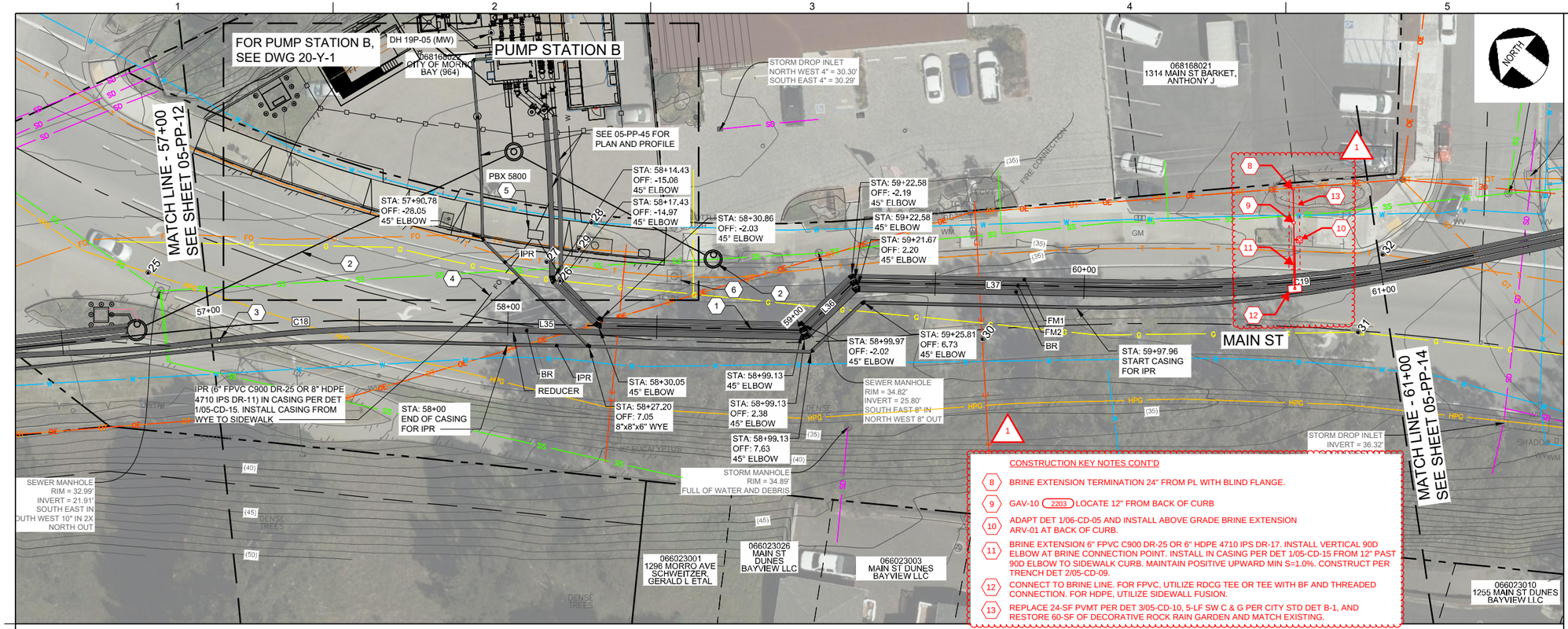

CONSTRUCTION KEY NOTES CONT'D

8. BRINE EXTENSION TERMINATION 24" FROM PL WITH BLIND FLANGE.
9. GAV-10 (2203) LOCATE 12" FROM BACK OF CURB
10. ADAPT DET 1/06-CD-05 AND INSTALL ABOVE GRADE BRINE EXTENSION ARV-01 AT BACK OF CURB.
11. BRINE EXTENSION 6" FPVC C900 DR-25 OR 6" HDPE 4710 IPS DR-17. INSTALL VERTICAL 90D ELBOW AT BRINE CONNECTION POINT. INSTALL IN CASING PER DET 1/05-CD-15 FROM 12" PAST 90D ELBOW TO SIDEWALK CURB. MAINTAIN POSITIVE UPWARD MIN S=1.0%. CONSTRUCT PER TRENCH DET 2/05-CD-09.
12. CONNECT TO BRINE LINE. FOR FPVC, UTILIZE RDCG TEE OR TEE WITH BF AND THREADED CONNECTION. FOR HDPE, UTILIZE SIDEWALL FUSION.
13. REPLACE 24-SF PVMT PER DET 3/05-CD-10, 5-LF SW C & G PER CITY STD DET B-1, AND RESTORE 60-SF OF DECORATIVE ROCK RAIN GARDEN AND MATCH EXISTING.

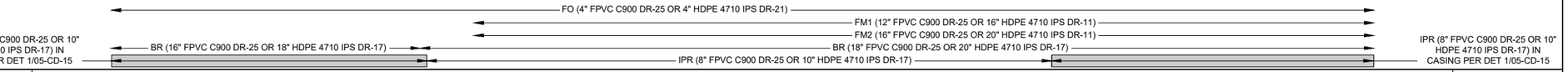

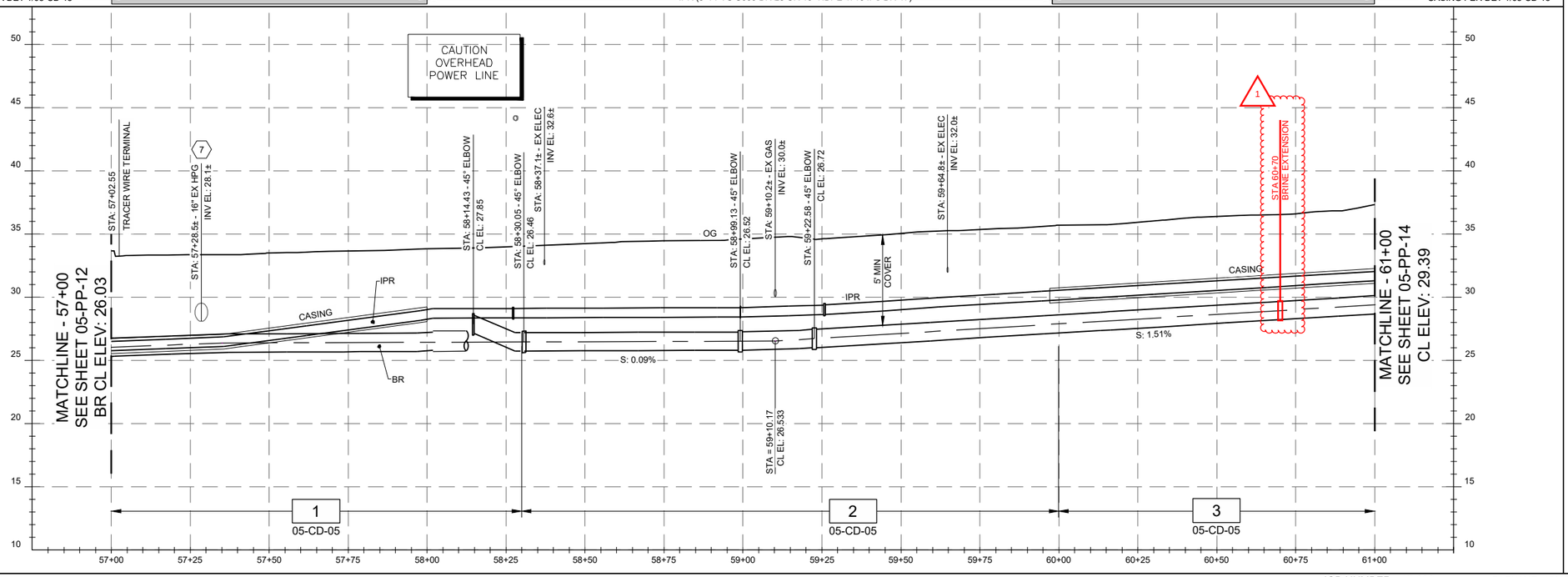

NOTES:

1. THE CONTRACTOR SHALL COMPLY WITH THE GENERAL CIVIL NOTES AND PERMITTING GENERAL NOTES.
2. HORIZONTAL ALIGNMENT AND PROFILE VERTICAL CURVES HEREIN ARE DESIGNED WITH THE MIN BENDING RADIUS OF THE LARGEST PIPELINE ASSUMING FPVC IS SELECTED. SMALLER BEND RADII MAY BE FEASIBLE DEPENDING ON THE PIPELINE MATERIAL AND LOCATION. THE CONTRACTOR MAY SUBMIT FOR APPROVAL MINOR HORIZONTAL ALIGNMENT CHANGES AND PROFILE VERTICAL CHANGES SO AS IT REDUCES FIELD CONFLICTS, REDUCES FITTINGS WHERE POSSIBLE, IS NOT ZERO SLOPED, AND DOES NOT RESULT IN A HIGH-SPOT.
3. PER SO CAL GAS REQUIREMENTS, ANY EXCAVATION WITHIN 10-FT OF A SO CAL GAS HIGH PRESSURE NATURAL GAS PIPELINE MUST BE COORDINATED THROUGH UNDERGROUND SERVICES ALERT (811) WITH A SO CAL GAS CO. STANDBY EMPLOYEE. IN ADDITION, ANY EXCAVATION, SUBGRADE REMOVAL, OR COMPACTION PERFORMED WITH 2' OF THE EDGE OF A SO CAL GAS PIPELINE BUT BE DONE UTILIZING HAND OPERATED TOOLS. ALL HIGH-PRESSURE GAS LINE EXCAVATIONS MUST HAVE A SOCAL GAS EMPLOYEE ON SITE.

CONSTRUCTION KEY NOTES:

1. INSTALL WRF OFFSITE PIPELINES, VALVES, AND APPURTENANCES PER HORIZONTAL PLAN AND VERTICAL PROFILE. ALIGNMENT IS CL OF FM2 UNLESS OTHERWISE NOTED. ORDER, PLACEMENT, AND REQUIRED CLEARANCES SHALL BE DETERMINED PER SPECIFIED TRENCH DETAIL UNDER PROFILE. SIZE & CLASS OF CARRIER AND/OR CASING PIPE MATERIALS ARE LISTED SCHEMATICALLY ABOVE PROFILE.
2. GRAVITY SEWER TO PS-B CONNECTION PER DWG 05-PP-45.
3. INSTALL TRACER WIRE TRMINAL (2060) LOCATE ON CL BR.
4. WHERE FO DIVERGES FROM MAIN ALIGNMENT INSTALL PER DET 1/05-CD-09.
5. INSTALL FIBER PULLBOX PER DWG 00-E-04/VLT SIZE S534.
6. HIGH PRIORITY UTILITY VERIFICATION REQUIRED. CONTRACTOR TO VERIFY LIMITS OF ATT MANHOLE.
7. HPG CROSSING. CONTRACTOR TO SUBMIT PIPE SUPPORT PLAN TO CONSTRUCTION MANAGER AND SOCAL GAS.

POTHOLING RESULTS:

EXISTING POTHOLING LOCATIONS AND RESULTS ARE APPROXIMATE, NOT SURVEYED, AND DO NOT PRECLUDE THE CONTRACTOR'S SOLE RESPONSIBILITY TO COMPLY WITH UTILITY VERIFICATION REQUIREMENTS.

25. 7"AC PVMNT, 46"CVR TO 16"STL HPG.
26. 9"AC PVMNT, 50"CVR TO 6"STL GAS.
27. 32" CVR, 49" DEEP, CONC ENCASE TELEPHONE.
28. 6" CONC, 30" CVR, 42" DEEP, WATER.
29. UNPAVED, 80" CVR, 85" DEEP, FO CONDUIT.
30. 7"AC PVMNT, 35" CVR, 46" DEEP, E CONDUIT 3X.
31. 7"AC PVMNT, 73"CVR TO 6"STL GAS.
32. 7"AC PVMNT, 28"CVR, 48"DEEP, 20"W CONC ENCASE TELEPHONE.

20 0 20 40 FEET
HORIZ SCALE 1"=20'
5 0 5 10 FEET
VERT SCALE 1"=5'

REGISTERED PROFESSIONAL ENGINEER PAUL HAEL FISHER No. C61794 CIVIL STATE OF CALIFORNIA
05/29/2020

DESIGN	P WEBSTER
DRAWN	P WEBSTER
CHECKED	T LEWIS
APPROVED	M FISHER

WATERWORKS ENGINEERS
2260 Douglas Blvd., Suite 105 • Roseville, CA 95661 • 916-780-9888

CITY OF MORRO BAY
WATER RECLAMATION FACILITY
LIFT STATION AND OFFSITE PIPELINES

PLAN AND PROFILE
FORCE MAIN PLAN AND PROFILE STA 57+00 TO STA 61+00

DATE MAY 2020
PROJECT NUMBER 17-082
DRAWING NUMBER 05-PP-13
SHEET NUMBER 36

L:\CAD\PROJECTS\17-082 MORRO BAY PS AND PIPELINE_(S)\PROJECT FILES\DELIVERABLES\1782D-05PP113.DWG

JOB NUMBER: 17-082 FILENAME: 1782D-05PP113.DWG PLOT DATE: 05/23/20 PLOT TIME: 14:38:25

CONFORMED SET - DEC 2020

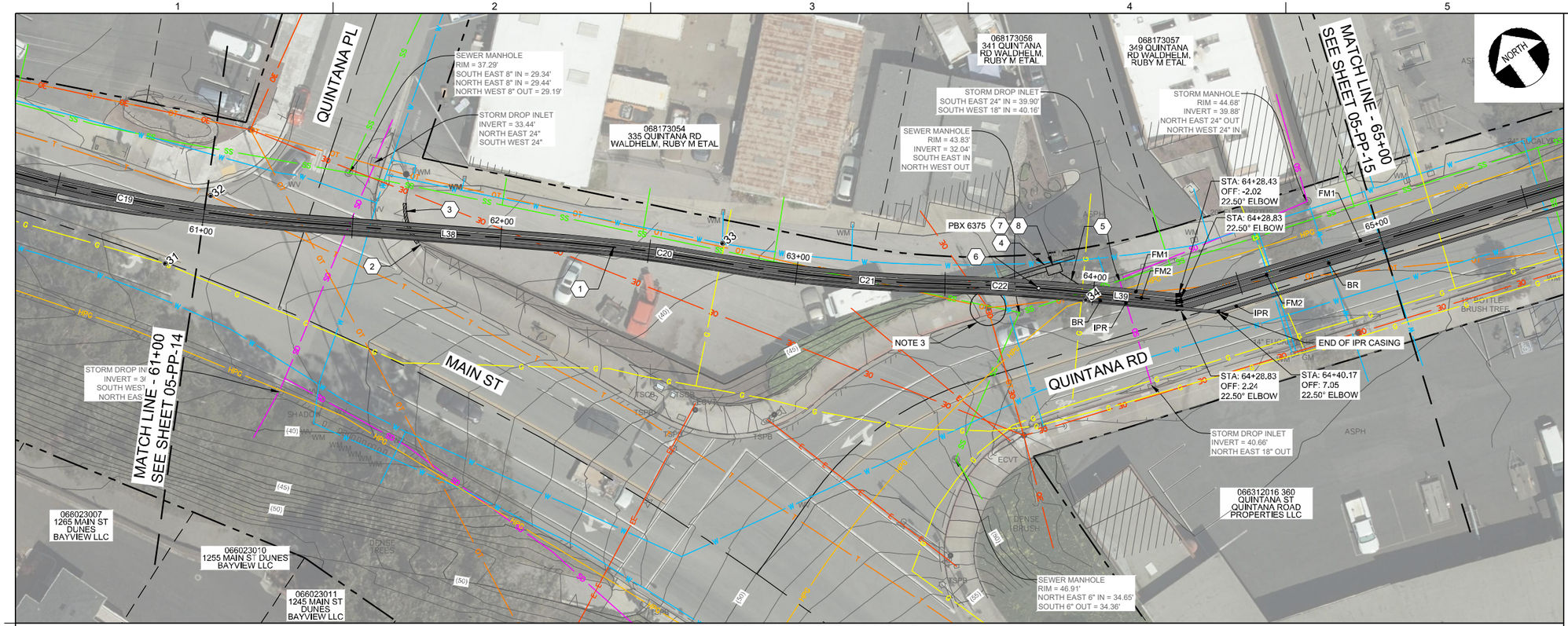

FO (4" FPVC C900 DR-25 OR 4" HDPE 4710 IPS DR-21 OR 4" SCH-40 PVC1)
FM1 (12" FPVC C900 DR-25 OR 16" HDPE 4710 IPS DR-11)
FM2 (16" FPVC C900 DR-25 OR 20" HDPE 4710 IPS DR-11)
BR (18" FPVC C900 DR-25 OR 20" HDPE 4710 IPS DR-17)
IPR (8" FPVC C900 DR-25 OR 10" HDPE 4710 IPS DR-17) IN CASING PER DET 1/05-CD-15
IPR (8" FPVC C900 DR-25 OR 10" HDPE 4710 IPS DR-17)

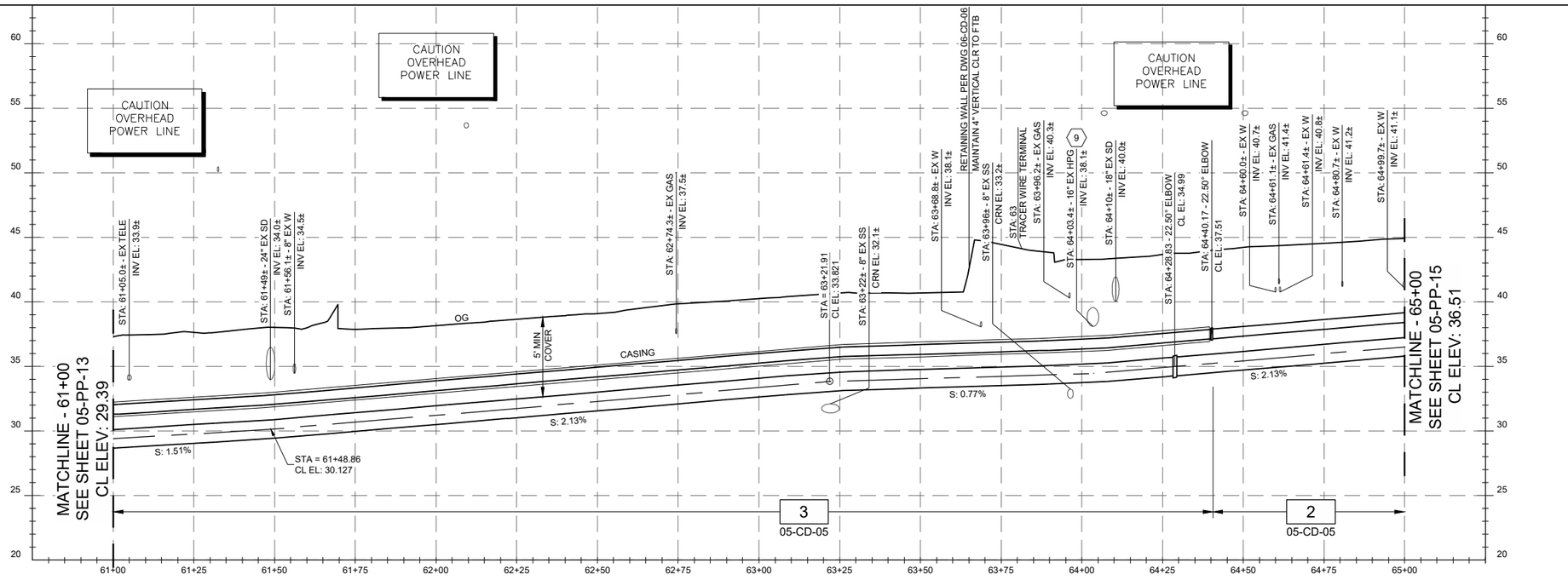

NOTES:

1. THE CONTRACTOR SHALL COMPLY WITH THE GENERAL CIVIL NOTES AND PERMITTING GENERAL NOTES.
2. HORIZONTAL ALIGNMENT AND PROFILE VERTICAL CURVES HEREIN ARE DESIGNED WITH THE MIN BENDING RADIUS OF THE LARGEST PIPELINE ASSUMING FPVC IS SELECTED. SMALLER BEND RADII MAY BE FEASIBLE DEPENDING ON THE PIPELINE MATERIAL AND LOCATION. THE CONTRACTOR MAY SUBMIT FOR APPROVAL MINOR HORIZONTAL ALIGNMENT CHANGES AND PROFILE VERTICAL CHANGES SO AS IT REDUCES FIELD CONFLICTS, REDUCES FITTINGS WHERE POSSIBLE, IS NOT ZERO SLOPED, AND DOES NOT RESULT IN A HIGH-SPOT.
3. EXCAVATION WITHIN 6' OF TELE POLE SHALL BE COORDINATED WITH OWNER AND MAY REQUIRE CONSTRUCTION PHASE SUPPORT.
4. PER SO CAL GAS REQUIREMENTS, ANY EXCAVATION WITHIN 10-FT OF A SO CAL GAS HIGH PRESSURE NATURAL GAS PIPELINE MUST BE COORDINATED THROUGH UNDERGROUND SERVICES ALERT (811) WITH A SO CAL GAS CO. STANDBY EMPLOYEE. IN ADDITION, ANY EXCAVATION, SUBGRADE REMOVAL, OR COMPACTION PERFORMED WITH 2' OF THE EDGE OF A SO CAL GAS PIPELINE BUT BE DONE UTILIZING HAND OPERATED TOOLS. ALL HIGH-PRESSURE GAS LINE EXCAVATIONS MUST HAVE A SOCAL GAS EMPLOYEE ON SITE.

CONSTRUCTION KEY NOTES:

1. INSTALL WRF OFFSITE PIPELINES, VALVES, AND APPURTENANCES PER HORIZONTAL PLAN AND VERTICAL PROFILE. ALIGNMENT IS CL OF FM2 UNLESS OTHERWISE NOTED. ORDER, PLACEMENT, AND REQUIRED CLEARANCES SHALL BE DETERMINED PER SPECIFIED TRENCH DETAIL UNDER PROFILE. SIZE & CLASS OF CARRIER AND/OR CASING PIPE MATERIALS ARE LISTED SCHEMATICALLY ABOVE PROFILE.
2. PROTECT EX CMU RETAINING WALL IN PLACE
3. REPLACE EX CMU CURB ALONG BACK OF WALK WITH MONOLITHIC CONCRETE TYPE "C" CURB PER CITY STD DETAIL B-2.
4. REPLACE 39-LF CMU RETAINING WALL PER DETAIL 1/06-CD-06.
5. REMOVE 24" EUCALYPTUS TREE.
6. INSTALL TRACER WIRE TERMINAL (2060) LOCATE ON CL BR.
7. WHERE FO DIVERGES FROM MAIN ALIGNMENT INSTALL PER DET 1/05-CD-09
8. 3'Lx5'Wx4'V TRAFFIC RATED FO UPB PER DWG UPB/E-2.
9. HPG CROSSING. CONTRACTOR TO SUBMIT PIPE SUPPORT PLAN TO CONSTRUCTION MANAGER AND SOCAL GAS.

POTHOLING RESULTS:

EXISTING OTHOLING LOCATIONS AND RESULTS ARE APPROXIMATE, NOT SURVEYED, AND DO NOT PRECLUDE THE CONTRACTOR'S SOLE RESPONSIBILITY TO COMPLY WITH UTILITY VERIFICATION REQUIREMENTS.

(33.) 3" A.C. PVMNT, 45° CVR FOR 12"W, 26"CVR TO 2"G, 20"CVR TO 2"W SERVICE LINE

(34.) 7" A.C. PVMNT, 45° CVR FOR 16"HPG

20 0 20 40 FEET
HORIZ SCALE 1"=20'

5 0 5 10 FEET
VERT SCALE 1"=5'

REGISTERED PROFESSIONAL ENGINEER
MICHAEL P. PYBURN
No. C67194
CIVIL
STATE OF CALIFORNIA
05/29/2020

DESIGN	P WEBSTER
DRAWN	P WEBSTER
CHECKED	T LEWIS
APPROVED	M FISHER

WATERWORKS ENGINEERS
2260 Douglas Blvd., Suite 105 • Roseville, CA 95661 • 916-780-9888

CITY OF MORRO BAY
WATER RECLAMATION FACILITY
LIFT STATION AND OFFSITE PIPELINES

PLAN AND PROFILE
FORCE MAIN PLAN AND PROFILE
STA 61+00 TO STA 65+00

DATE	MAY 2020
PROJECT NUMBER	17-082
DRAWING NUMBER	05-PP-14
SHEET NUMBER	37

L:\CAD\PROJECTS\17-082 MORRO BAY PS AND PIPELINE_(S)\PROJECT FILES\DELIVERABLES\1782D-05PP114.DWG

JOB NUMBER: 17-082 FILENAME: 1782D-05PP114.DWG PLOT DATE: 05/23/20 PLOT TIME: 14:38:53

CONFORMED SET - DEC 2020

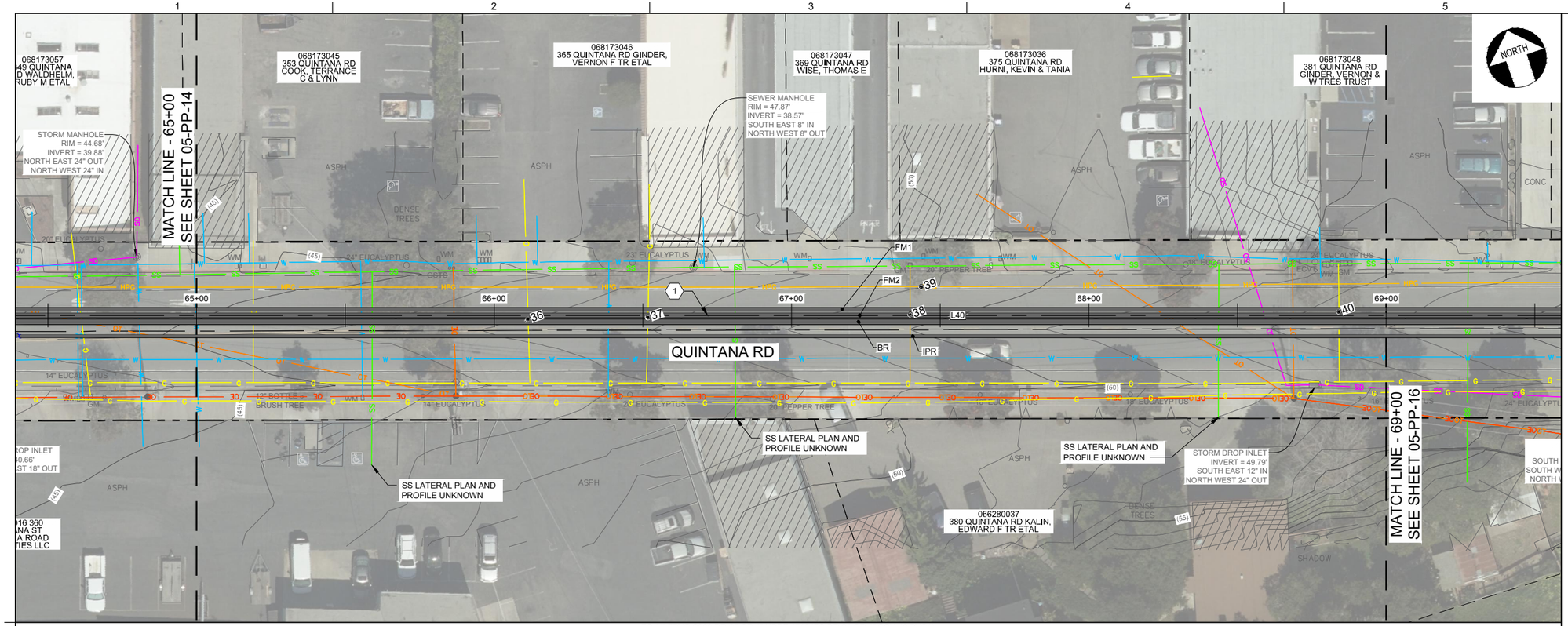

FO (4" FPVC C900 DR-25 OR 4" HDPE 4710 IPS DR-21 OR 4" SCH-40 PVC1)
FM1 (12" FPVC C900 DR-25 OR 16" HDPE 4710 IPS DR-11)
FM2 (16" FPVC C900 DR-25 OR 20" HDPE 4710 IPS DR-11)
BR (18" FPVC C900 DR-25 OR 20" HDPE 4710 IPS DR-17)
IPR (8" FPVC C900 DR-25 OR 10" HDPE 4710 IPS DR-17)

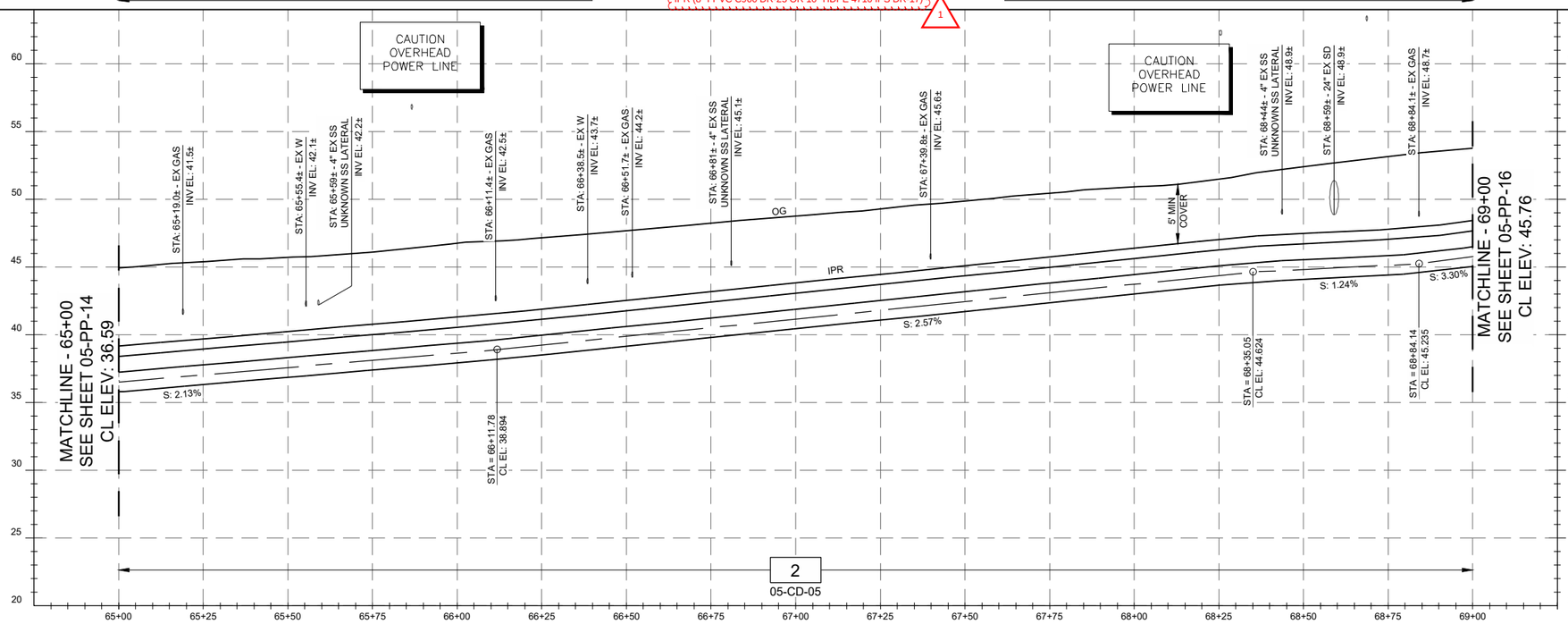

2
05-CD-05

NOTES:

1. THE CONTRACTOR SHALL COMPLY WITH THE GENERAL CIVIL NOTES AND PERMITTING GENERAL NOTES.
2. HORIZONTAL ALIGNMENT AND PROFILE VERTICAL CURVES HEREIN ARE DESIGNED WITH THE MIN BENDING RADIUS OF THE LARGEST PIPELINE ASSUMING FPVC IS SELECTED. SMALLER BEND RADII MAY BE FEASIBLE DEPENDING ON THE PIPELINE MATERIAL AND LOCATION. THE CONTRACTOR MAY SUBMIT FOR APPROVAL MINOR HORIZONTAL ALIGNMENT CHANGES AND PROFILE VERTICAL CHANGES SO AS IT REDUCES FIELD CONFLICTS, REDUCES FITTINGS WHERE POSSIBLE, IS NOT ZERO SLOPED, AND DOES NOT RESULT IN A HIGH-SPOT.
3. PER SO CAL GAS REQUIREMENTS, ANY EXCAVATION WITHIN 10-FT OF A SO CAL GAS HIGH PRESSURE NATURAL GAS PIPELINE MUST BE COORDINATED THROUGH UNDERGROUND SERVICES ALERT (811) WITH A SO CAL GAS CO. STANDBY EMPLOYEE. IN ADDITION, ANY EXCAVATION, SUBGRADE REMOVAL, OR COMPACTION PERFORMED WITH 2' OF THE EDGE OF A SO CAL GAS PIPELINE BUT BE DONE UTILIZING HAND OPERATED TOOLS. ALL HIGH-PRESSURE GAS LINE EXCAVATIONS MUST HAVE A SOCAL GAS EMPLOYEE ON SITE.

CONSTRUCTION KEY NOTES:

1. INSTALL WRF OFFSITE PIPELINES, VALVES, AND APPURTENANCES PER HORIZONTAL PLAN AND VERTICAL PROFILE. ALIGNMENT IS CL OF FM2 UNLESS OTHERWISE NOTED. ORDER, PLACEMENT, AND REQUIRED CLEARANCES SHALL BE DETERMINED PER SPECIFIED TRENCH DETAIL UNDER PROFILE. SIZE & CLASS OF CARRIER AND/OR CASING PIPE MATERIALS ARE LISTED SCHEMATICALLY ABOVE PROFILE.

POTHOLING RESULTS:

EXISTING POTHOLING LOCATIONS AND RESULTS ARE APPROXIMATE, NOT SURVEYED, AND DO NOT PRECLUDE THE CONTRACTOR'S SOLE RESPONSIBILITY TO COMPLY WITH UTILITY VERIFICATION REQUIREMENTS.

36. 6" A.C. PVMNT, 39" CVR, 41" DEPTH, GAS.
37. 6" A.C. PVMNT, 34" CVR, 36" DEEP, GAS.
38. 6" A.C. PVMNT, 36" CVR, 37" DEEP, GAS.
39. 6" A.C. PVMNT, 47" CVR, 16" HPG.
40. 6" A.C. PVMNT, 38" CVR, 39" DEEP, GAS.

20 0 20 40 FEET
HORIZ SCALE 1"=20'

5 0 5 10 FEET
VERT SCALE 1"=5'

REGISTERED PROFESSIONAL ENGINEER
MICHAEL P. PEARCE
No. C 67194
CIVIL
STATE OF CALIFORNIA
05/29/2020

DESIGN	P WEBSTER
DRAWN	P WEBSTER
CHECKED	T LEWIS
APPROVED	M FISHER

WATERWORKS ENGINEERS
2260 Douglas Blvd., Suite 105 • Roseville, CA 95661 • 916-780-9888

CITY OF MORRO BAY
WATER RECLAMATION FACILITY
LIFT STATION AND OFFSITE PIPELINES

PLAN AND PROFILE
FORCE MAIN PLAN AND PROFILE
STA 65+00 TO STA 69+00

DATE	MAY 2020
PROJECT NUMBER	17-082
DRAWING NUMBER	05-PP-15
SHEET NUMBER	38

L:\CAD\PROJECTS\17-082 MORRO BAY PS AND PIPELINE_(S)\PROJECT FILES\DELIVERABLES\1782D-05PP115.DWG

JOB NUMBER: 17-082 FILENAME: 1782D-05PP115.DWG PLOT DATE: 05/23/20 PLOT TIME: 14:39:23

CONFORMED SET - DEC 2020

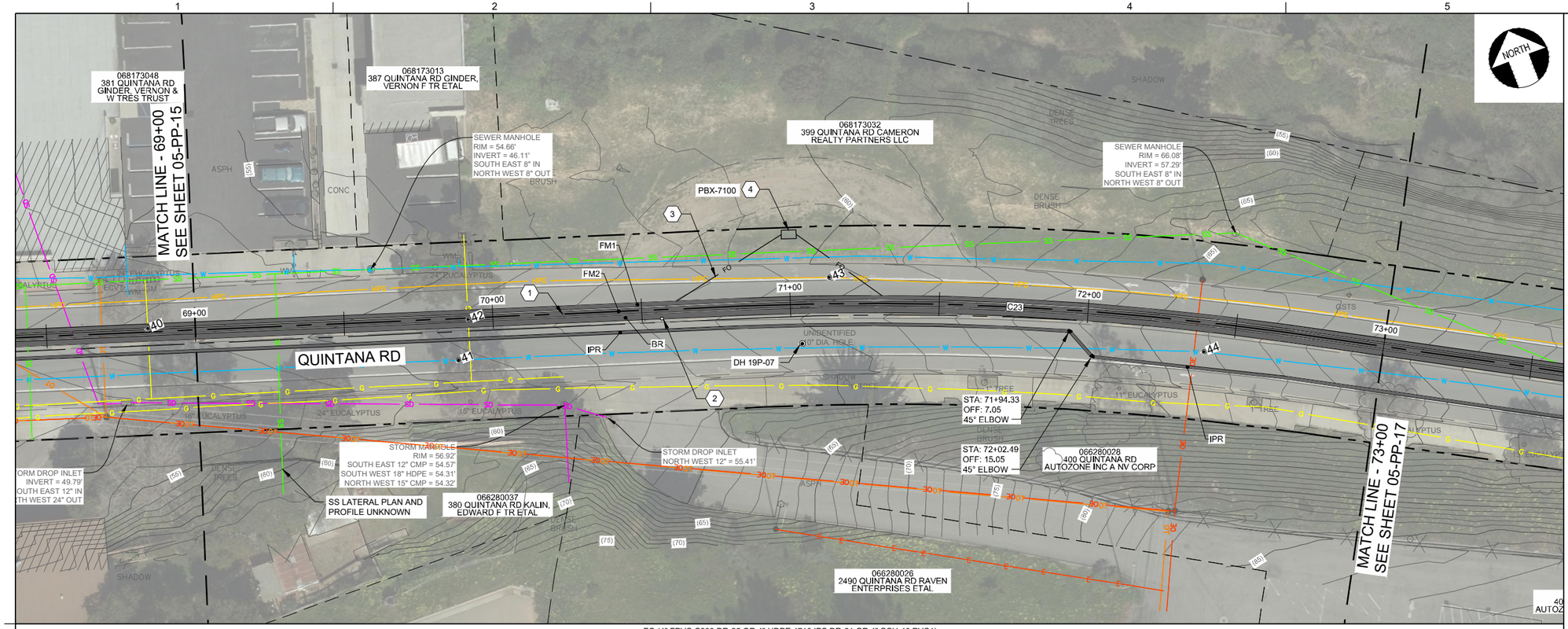

FO (4" FPVC C900 DR-25 OR 4" HDPE 4710 IPS DR-21 OR 4" SCH-40 PVC1)
FM1 (12" FPVC C900 DR-25 OR 16" HDPE 4710 IPS DR-11)
FM2 (16" FPVC C900 DR-25 OR 20" HDPE 4710 IPS DR-11)
BR (18" FPVC C900 DR-25 OR 20" HDPE 4710 IPS DR-17)
IPR (8" FPVC C900 DR-25 OR 10" HDPE 4710 IPS DR-17) 1

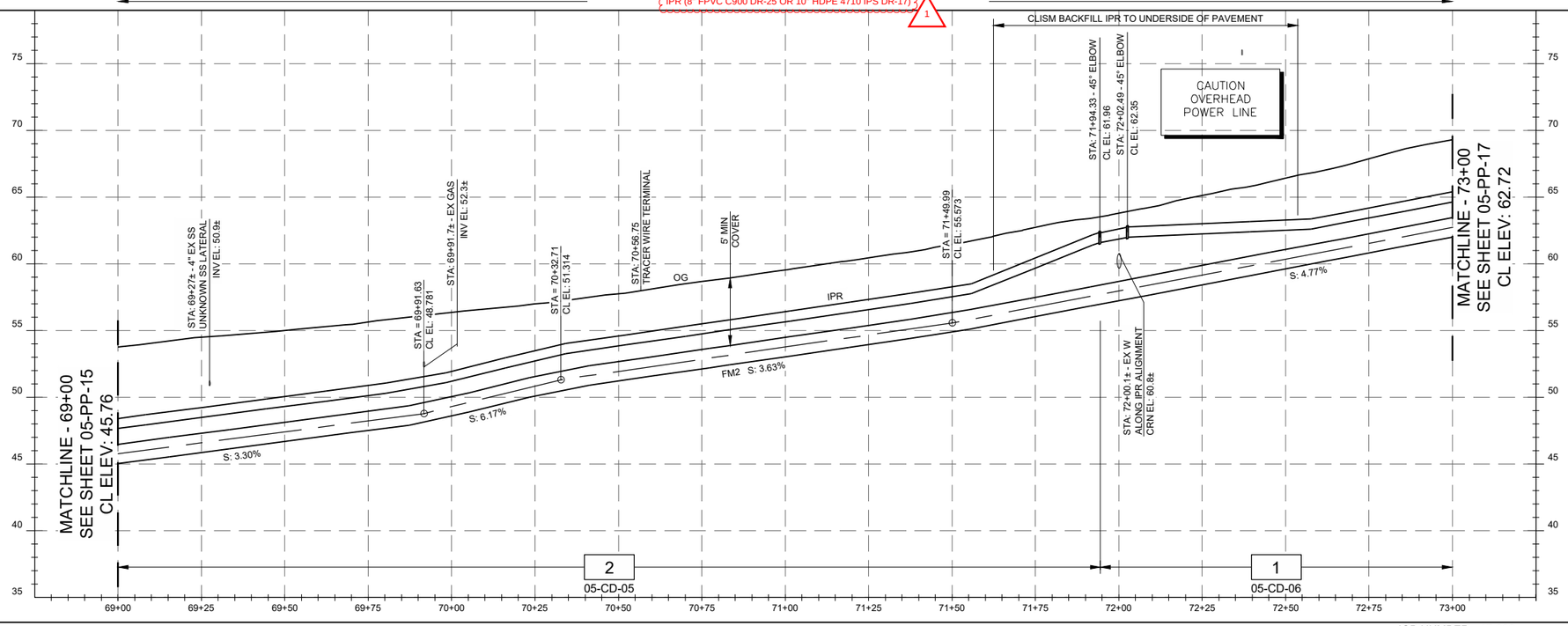

NOTES:

1. THE CONTRACTOR SHALL COMPLY WITH THE GENERAL CIVIL NOTES AND PERMITTING GENERAL NOTES.
2. HORIZONTAL ALIGNMENT AND PROFILE VERTICAL CURVES HEREIN ARE DESIGNED WITH THE MIN BENDING RADIUS OF THE LARGEST PIPELINE ASSUMING FPVC IS SELECTED. SMALLER BEND RADII MAY BE FEASIBLE DEPENDING ON THE PIPELINE MATERIAL AND LOCATION. THE CONTRACTOR MAY SUBMIT FOR APPROVAL MINOR HORIZONTAL ALIGNMENT CHANGES AND PROFILE VERTICAL CHANGES SO AS IT REDUCES FIELD CONFLICTS, REDUCES FITTINGS WHERE POSSIBLE, IS NOT ZERO SLOPED, AND DOES NOT RESULT IN A HIGH-SPOT.
3. PER SO CAL GAS REQUIREMENTS, ANY EXCAVATION WITHIN 10-FT OF A SO CAL GAS HIGH PRESSURE NATURAL GAS PIPELINE MUST BE COORDINATED THROUGH UNDERGROUND SERVICES ALERT (811) WITH A SO CAL GAS CO. STANDBY EMPLOYEE. IN ADDITION, ANY EXCAVATION, SUBGRADE REMOVAL, OR COMPACTION PERFORMED WITH 2' OF THE EDGE OF A SO CAL GAS PIPELINE BUT BE DONE UTILIZING HAND OPERATED TOOLS. ALL HIGH-PRESSURE GAS LINE EXCAVATIONS MUST HAVE A SOCAL GAS EMPLOYEE ON SITE.

CONSTRUCTION KEY NOTES:

1. INSTALL WRF OFFSITE PIPELINES, VALVES, AND APPURTENANCES PER HORIZONTAL PLAN AND VERTICAL PROFILE. ALIGNMENT IS CL OF FM2 UNLESS OTHERWISE NOTED. ORDER, PLACEMENT, AND REQUIRED CLEARANCES SHALL BE DETERMINED PER SPECIFIED TRENCH DETAIL UNDER PROFILE. SIZE & CLASS OF CARRIER AND/OR CASING PIPE MATERIALS ARE LISTED SCHEMATICALLY ABOVE PROFILE.
2. INSTALL TRACER WIRE TERMINAL (2060) LOCATE OFF-3.0' FROM CL FM2 ADJACENT TO ROAD CL.
3. WHERE FO DIVERGES FROM MAIN ALIGNMENT INSTALL PER DET 1/05-CD-09.
4. INSTALL FIBER PULLBOX PER DWG 00-E-04/VLT SIZE S534.

POTHOLING RESULTS:

EXISTING POTHOLING LOCATIONS AND RESULTS ARE APPROXIMATE, NOT SURVEYED, AND DO NOT PRECLUDE THE CONTRACTOR'S SOLE RESPONSIBILITY TO COMPLY WITH UTILITY VERIFICATION REQUIREMENTS.

41. 7" A.C. PVMNT, 41" CVR, 12"W.
42. 6" A.C. PVMNT, 39" CVR, 40" DEEP, GAS.
43. 12"A.C. PVMNT, 47" CVR, 16"HPG.
44. 7"A.C. PVMNT, 48" CVR, 12"W.

20 0 20 40 FEET
HORIZ SCALE 1"=20'
5 0 5 10 FEET
VERT SCALE 1"=5'

REGISTERED PROFESSIONAL ENGINEER
PAUL MICHAEL WEBSTER
No. C67194
CIVIL
STATE OF CALIFORNIA
05/29/2020

DESIGN P WEBSTER
DRAWN P WEBSTER
CHECKED T LEWIS
APPROVED M FISHER

WATERWORKS ENGINEERS
2260 Douglas Blvd., Suite 105 • Roseville, CA 95661 • 916-780-9888

CITY OF MORRO BAY
WATER RECLAMATION FACILITY
LIFT STATION AND OFFSITE PIPELINES

PLAN AND PROFILE
FORCE MAIN PLAN AND PROFILE
STA 69+00 TO STA 73+00

DATE MAY 2020
PROJECT NUMBER 17-082
DRAWING NUMBER 05-PP-16
SHEET NUMBER 39

L:\CAD\PROJECTS\17-082 MORRO BAY PS AND PIPELINE_(S)\PROJECT FILES\DELIVERABLES\1782D-05PP116.DWG

JOB NUMBER: 17-082 FILENAME: 1782D-05PP116.DWG PLOT DATE: 05/23/20 PLOT TIME: 14:39:53

CONFORMED SET - DEC 2020

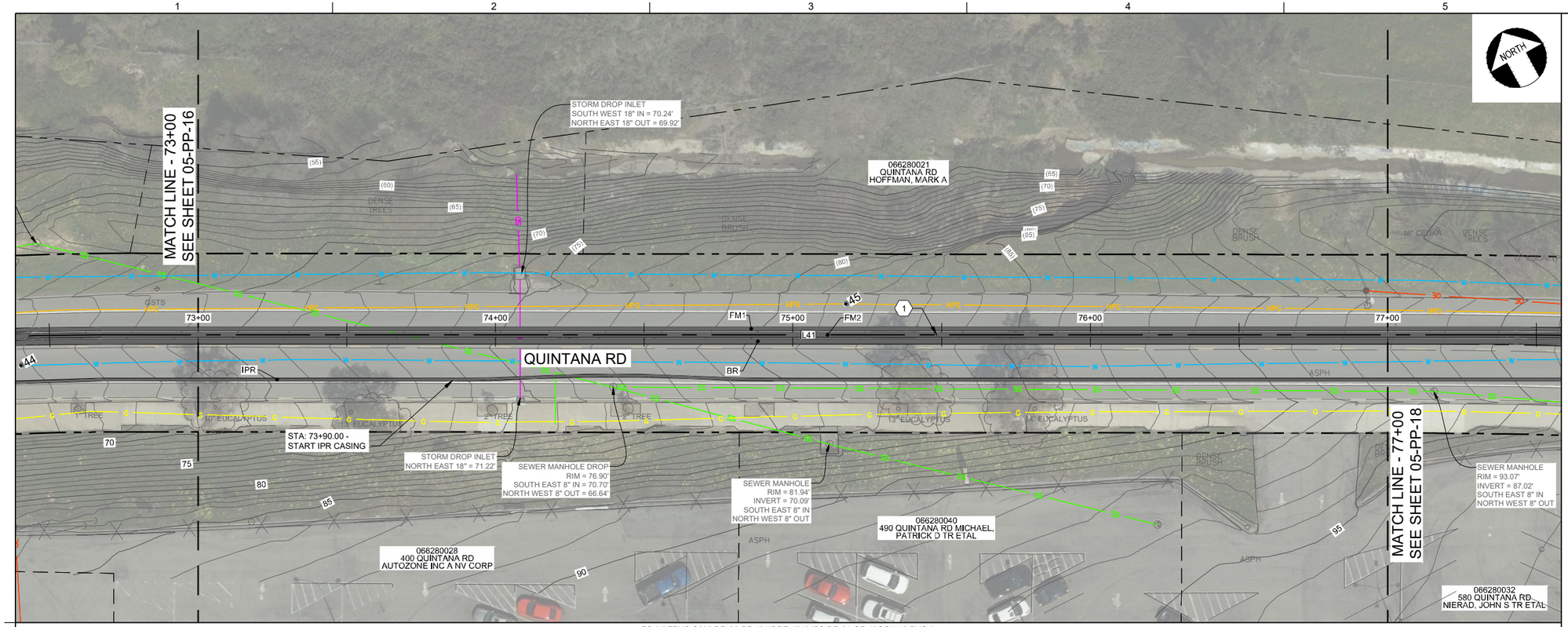

FO (4" FPVC C900 DR-25 OR 4" HDPE 4710 IPS DR-21 OR 4" SCH-40 PVC1)
FM1 (12" FPVC C900 DR-25 OR 16" HDPE 4710 IPS DR-11)
FM2 (16" FPVC C900 DR-25 OR 20" HDPE 4710 IPS DR-11)
BR (18" FPVC C900 DR-25 OR 20" HDPE 4710 IPS DR-17)
IPR (8" FPVC C900 DR-25 OR 10" HDPE 4710 IPS DR-17)
IPR (8" FPVC C900 DR-25 OR 10" HDPE 4710 IPS DR-17) IN CASING PER DET 1/05-CD-15

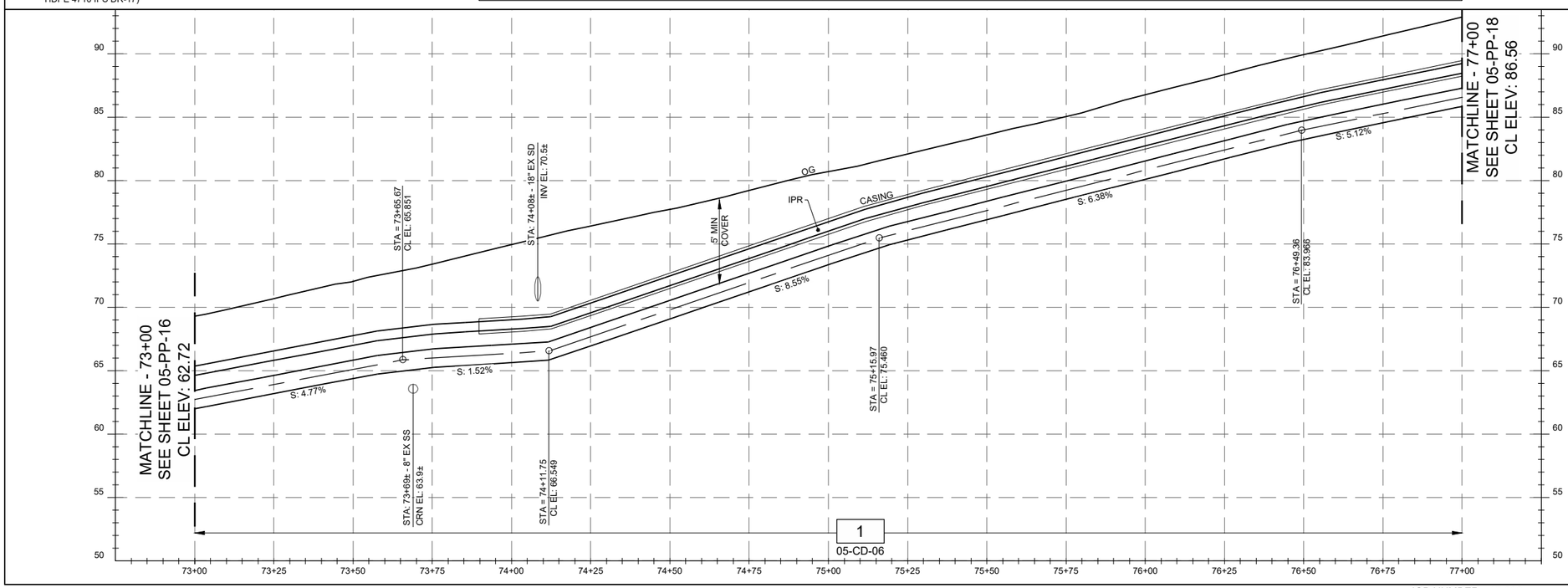

NOTES:

1. THE CONTRACTOR SHALL COMPLY WITH THE GENERAL CIVIL NOTES AND PERMITTING GENERAL NOTES.
2. HORIZONTAL ALIGNMENT AND PROFILE VERTICAL CURVES HEREIN ARE DESIGNED WITH THE MIN BENDING RADIUS OF THE LARGEST PIPELINE ASSUMING FPVC IS SELECTED. SMALLER BEND RADII MAY BE FEASIBLE DEPENDING ON THE PIPELINE MATERIAL AND LOCATION. THE CONTRACTOR MAY SUBMIT FOR APPROVAL MINOR HORIZONTAL ALIGNMENT CHANGES AND PROFILE VERTICAL CHANGES SO AS IT REDUCES FIELD CONFLICTS, REDUCES FITTINGS WHERE POSSIBLE, IS NOT ZERO SLOPED, AND DOES NOT RESULT IN A HIGH-SPOT.
3. PER SO CAL GAS REQUIREMENTS, ANY EXCAVATION WITHIN 10-FT OF A SO CAL GAS HIGH PRESSURE NATURAL GAS PIPELINE MUST BE COORDINATED THROUGH UNDERGROUND SERVICES ALERT (811) WITH A SO CAL GAS CO. STANDBY EMPLOYEE. IN ADDITION, ANY EXCAVATION, SUBGRADE REMOVAL, OR COMPACTION PERFORMED WITH 2' OF THE EDGE OF A SO CAL GAS PIPELINE BUT BE DONE UTILIZING HAND OPERATED TOOLS. ALL HIGH-PRESSURE GAS LINE EXCAVATIONS MUST HAVE A SOCAL GAS EMPLOYEE ON SITE.

CONSTRUCTION KEY NOTES:

(1.) INSTALL WRF OFFSITE PIPELINES, VALVES, AND APPURTENANCES PER HORIZONTAL PLAN AND VERTICAL PROFILE. ALIGNMENT IS CL OF FM2 UNLESS OTHERWISE NOTED. ORDER, PLACEMENT, AND REQUIRED CLEARANCES SHALL BE DETERMINED PER SPECIFIED TRENCH DETAIL UNDER PROFILE. SIZE & CLASS OF CARRIER AND/OR CASING PIPE MATERIALS ARE LISTED SCHEMATICALLY ABOVE PROFILE.

POTHOLING RESULTS:

EXISTING POTHOLING LOCATIONS AND RESULTS ARE APPROXIMATE, NOT SURVEYED, AND DO NOT PRECLUDE THE CONTRACTOR'S SOLE RESPONSIBILITY TO COMPLY WITH UTILITY VERIFICATION REQUIREMENTS.

(45.) 9" A.C. PVMNT, 47" CVR, 16"HPG.

20 0 20 40 FEET
HORIZ SCALE 1"=20'
5 0 5 10 FEET
VERT SCALE 1"=5'

REGISTERED PROFESSIONAL ENGINEER
PETER MICHAEL WEBSTER
No. C67194
CIVIL
STATE OF CALIFORNIA
05/29/2020

DESIGN	P WEBSTER
DRAWN	P WEBSTER
CHECKED	T LEWIS
APPROVED	M FISHER

WATERWORKS ENGINEERS
2260 Douglas Blvd. Suite 105 • Roseville, CA 95661 • 916-780-9888

CITY OF MORRO BAY
WATER RECLAMATION FACILITY
LIFT STATION AND OFFSITE PIPELINES

PLAN AND PROFILE
FORCE MAIN PLAN AND PROFILE
STA 73+00 TO STA 77+00

DATE	MAY 2020
PROJECT NUMBER	17-082
DRAWING NUMBER	05-PP-17
SHEET NUMBER	40

L:\CAD\PROJECTS\17-082 MORRO BAY PS AND PIPELINE_(S)\PROJECT FILES\DELIVERABLES\1782D-05PP117.DWG

CONFORMED SET - DEC 2020

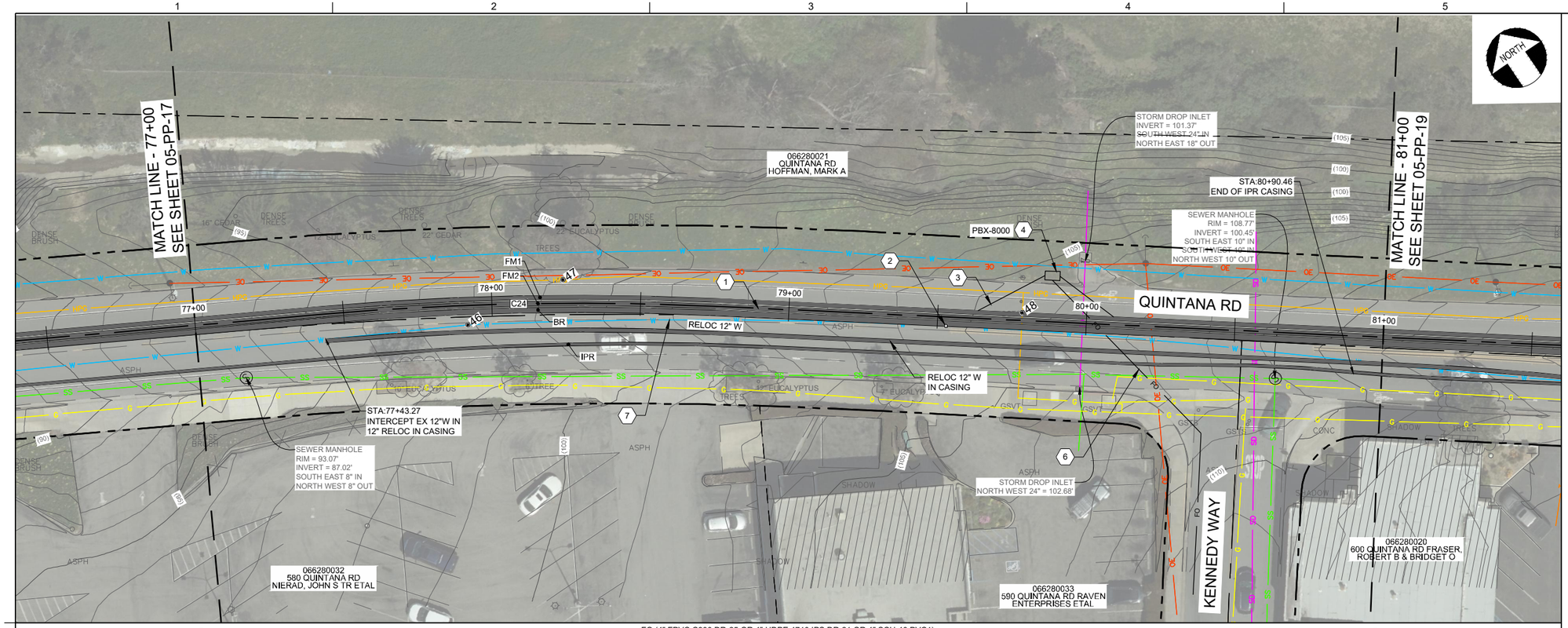

FO (4" FPVC C900 DR-25 OR 4" HDPE 4710 IPS DR-21 OR 4" SCH-40 PVC1)
FM1 (12" FPVC C900 DR-25 OR 16" HDPE 4710 IPS DR-11)
FM2 (16" FPVC C900 DR-25 OR 20" HDPE 4710 IPS DR-11)
BR (18" FPVC C900 DR-25 OR 20" HDPE 4710 IPS DR-17)
12"W (12" FPVC C900 DR-18) IN CASING PER DET 1/05-CD-15
IPR (8" FPVC C900 DR-25 OR 10" HDPE 4710 IPS DR-11) IN CASING PER DET 1/05-CD-15
IPR (8" FPVC C900 DR-25 OR 10" HDPE 4710 IPS DR-17)

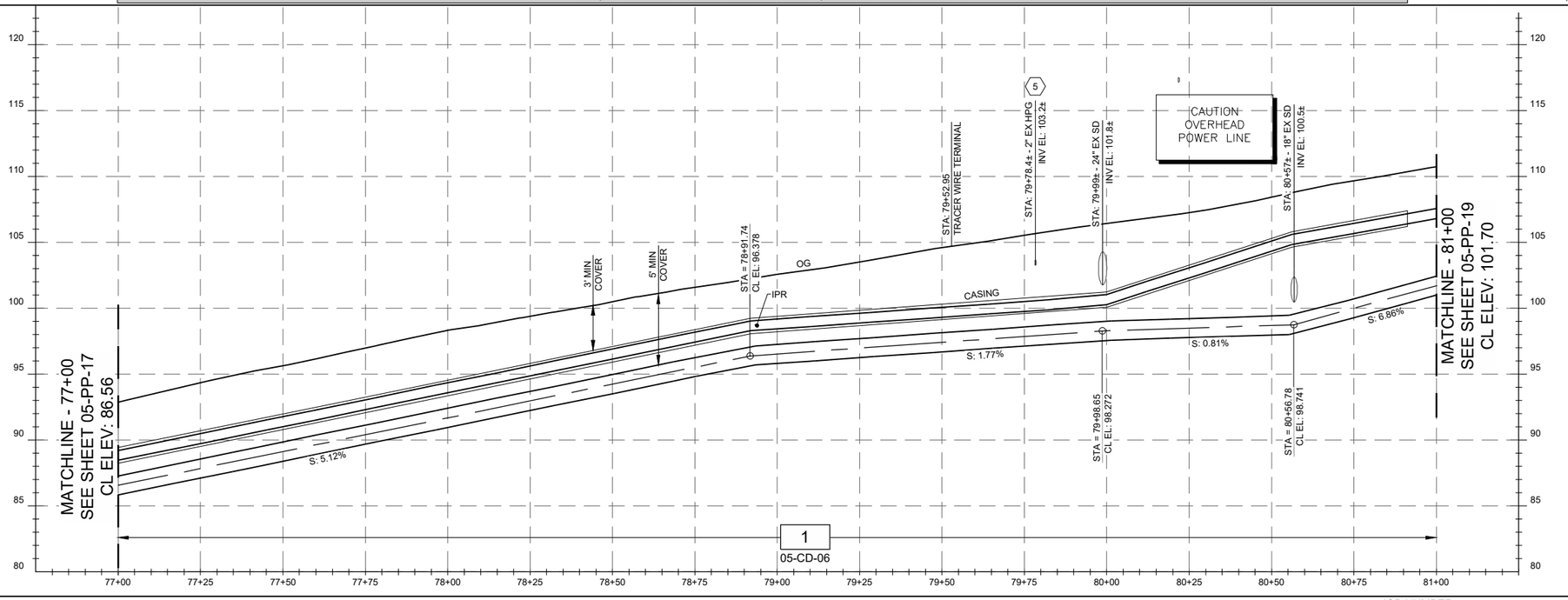

NOTES:

1. THE CONTRACTOR SHALL COMPLY WITH THE GENERAL CIVIL NOTES AND PERMITTING GENERAL NOTES.
2. HORIZONTAL ALIGNMENT AND PROFILE VERTICAL CURVES HEREIN ARE DESIGNED WITH THE MIN BENDING RADIUS OF THE LARGEST PIPELINE ASSUMING FPVC IS SELECTED. SMALLER BEND RADII MAY BE FEASIBLE DEPENDING ON THE PIPELINE MATERIAL AND LOCATION. THE CONTRACTOR MAY SUBMIT FOR APPROVAL MINOR HORIZONTAL ALIGNMENT CHANGES AND PROFILE VERTICAL CHANGES SO AS IT REDUCES FIELD CONFLICTS, REDUCES FITTINGS WHERE POSSIBLE, IS NOT ZERO SLOPED, AND DOES NOT RESULT IN A HIGH-SPOT.
3. PER SO CAL GAS REQUIREMENTS, ANY EXCAVATION WITHIN 10-FT OF A SO CAL GAS HIGH PRESSURE NATURAL GAS PIPELINE MUST BE COORDINATED THROUGH UNDERGROUND SERVICES ALERT (811) WITH A SO CAL GAS CO. STANDBY EMPLOYEE. IN ADDITION, ANY EXCAVATION, SUBGRADE REMOVAL, OR COMPACTION PERFORMED WITH 2' OF THE EDGE OF A SO CAL GAS PIPELINE BUT BE DONE UTILIZING HAND OPERATED TOOLS. ALL HIGH-PRESSURE GAS LINE EXCAVATIONS MUST HAVE A SOCAL GAS EMPLOYEE ON SITE.

CONSTRUCTION KEY NOTES:

1. INSTALL WRF OFFSITE PIPELINES, VALVES, AND APPURTENANCES PER HORIZONTAL PLAN AND VERTICAL PROFILE. ALIGNMENT IS CL OF FM2 UNLESS OTHERWISE NOTED. ORDER, PLACEMENT, AND REQUIRED CLEARANCES SHALL BE DETERMINED PER SPECIFIED TRENCH DETAIL UNDER PROFILE. SIZE & CLASS OF CARRIER AND/OR CASING PIPE MATERIALS ARE LISTED SCHEMATICALLY ABOVE PROFILE.
2. INSTALL TRACER WIRE TERMINAL (2060) LOCATE OFF-3.0' FROM CL FM2 ADJACENT TO ROAD CL.
3. WHERE FO DIVERGES FROM MAIN ALIGNMENT INSTALL PER DET 1/05-CD-09.
4. INSTALL FIBER PULLBOX PER DWG 00-E-04/VLT SIZE S534.
5. HPG CROSSING. CONTRACTOR TO SUBMIT PIPE SUPPORT PLAN TO CONSTRUCTION MANAGER AND SOCAL GAS.
6. 500-LF 4" FO CONDUIT TO 1001 KENNEDY WAY (CITY COMMUNITY CENTER). ALIGNMENT TO BE DETERMINED BY CONSTRUCTION MANAGER AFTER PROJECT COMMENCEMENT. MATCH MATERIAL OF MAIN ALIGNMENT FO CONDUIT. ASSUME WORK WITHIN QUINTANA AND KENNEDY WAY ROADWAY, ASSUME THE SAME PAVEMENT ZONE AS THE MAIN ALIGNMENT, AND USE TRENCH DETAIL 1/05-CD-09. RUN CONDUIT TO LOCATION AT COMMUNITY CENTER SELECTED BY CONSTRUCTION MANAGER.
7. 12"PVC W TO BE ABANDONED AND FILLED WITH TYPE 2 LCC OR DEMOLISHED AS NEEDED IN CONJUNCTION WITH APPROVED BYPASS PLAN.

POTHOLING RESULTS:

EXISTING POTHOLING LOCATIONS AND RESULTS ARE APPROXIMATE, NOT SURVEYED, AND DO NOT PRECLUDE THE CONTRACTOR'S SOLE RESPONSIBILITY TO COMPLY WITH UTILITY VERIFICATION REQUIREMENT.

46. 8" A.C. PVMNT, 46" CVR, 12"W.
47. 9" A.C. PVMNT, 45 CVR, 16"HPG.
48. 5" A.C. PVMNT, 42 CVR, 2"HPG.

20 0 20 40 FEET
HORIZ SCALE 1"=20'
5 0 5 10 FEET
VERT SCALE 1"=5'

REGISTERED PROFESSIONAL ENGINEER
MICHAEL P. PYBURN
No. C67194
CIVIL
STATE OF CALIFORNIA
05/29/2020

DESIGN P WEBSTER
DRAWN P WEBSTER
CHECKED T LEWIS
APPROVED M FISHER

WATERWORKS ENGINEERS
2260 Douglas Blvd. Suite 105 • Roseville, CA 95661 • 916-780-9888

CITY OF MORRO BAY
WATER RECLAMATION FACILITY
LIFT STATION AND OFFSITE PIPELINES

PLAN AND PROFILE
FORCE MAIN PLAN AND PROFILE
STA 77+00 TO STA 81+00

DATE MAY 2020
PROJECT NUMBER 17-082
DRAWING NUMBER 05-PP-18
SHEET NUMBER 41

L:\CAD\PROJECTS\17-082 MORRO BAY PS AND PIPELINE_(S)\PROJECT FILES\DELIVERABLES\1782D-05PP118.DWG

CONFORMED SET - DEC 2020

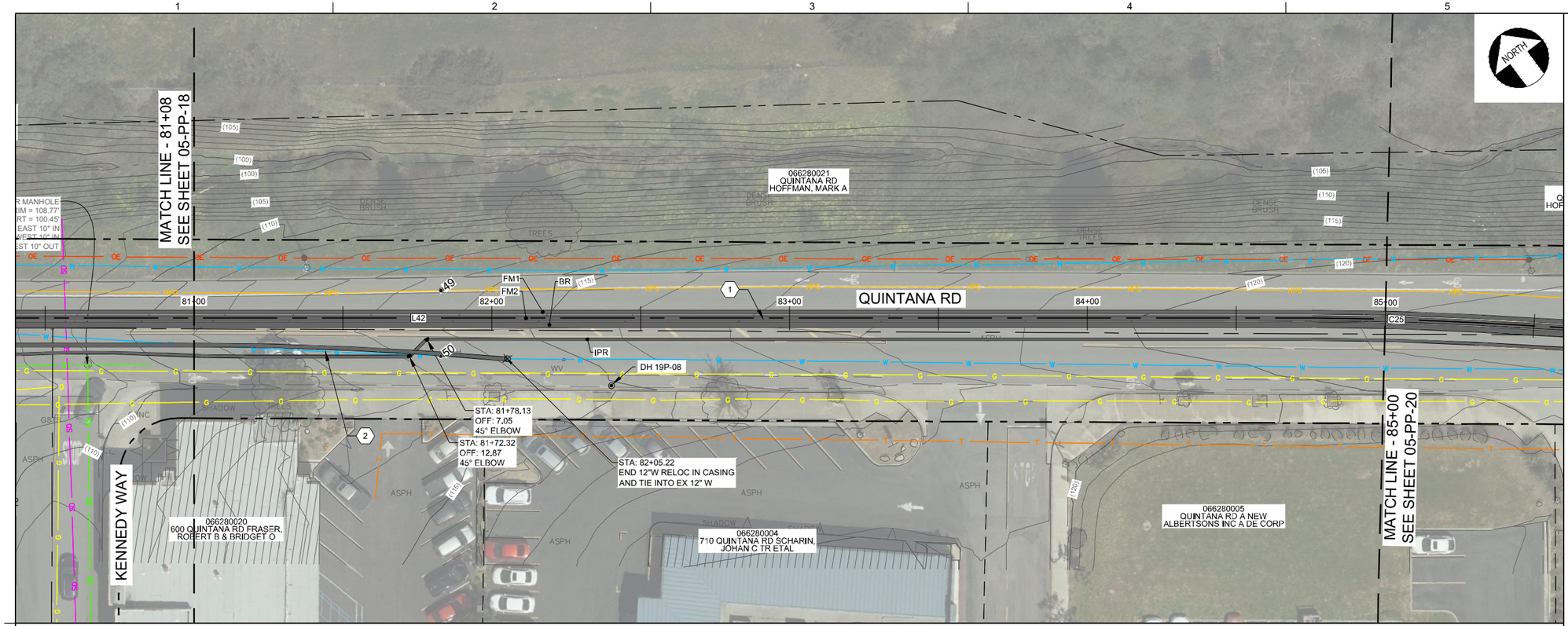

FO (4" FPVC C900 DR-25 OR 4" HDPE 4710 IPS DR-21 OR 4" SCH-40 PVC1)
FM1 (12" FPVC C900 DR-25 OR 16" HDPE 4710 IPS DR-11)
FM2 (16" FPVC C900 DR-25 OR 20" HDPE 4710 IPS DR-11)
BR (18" FPVC C900 DR-25 OR 20" HDPE 4710 IPS DR-17)
12"W (12" FPVC C900 DR-18) IN CASING IN CASING PER DET 1/5-CD-15
IPR (8" FPVC C900 DR-25 OR 10" HDPE 4710 IPS DR-17)

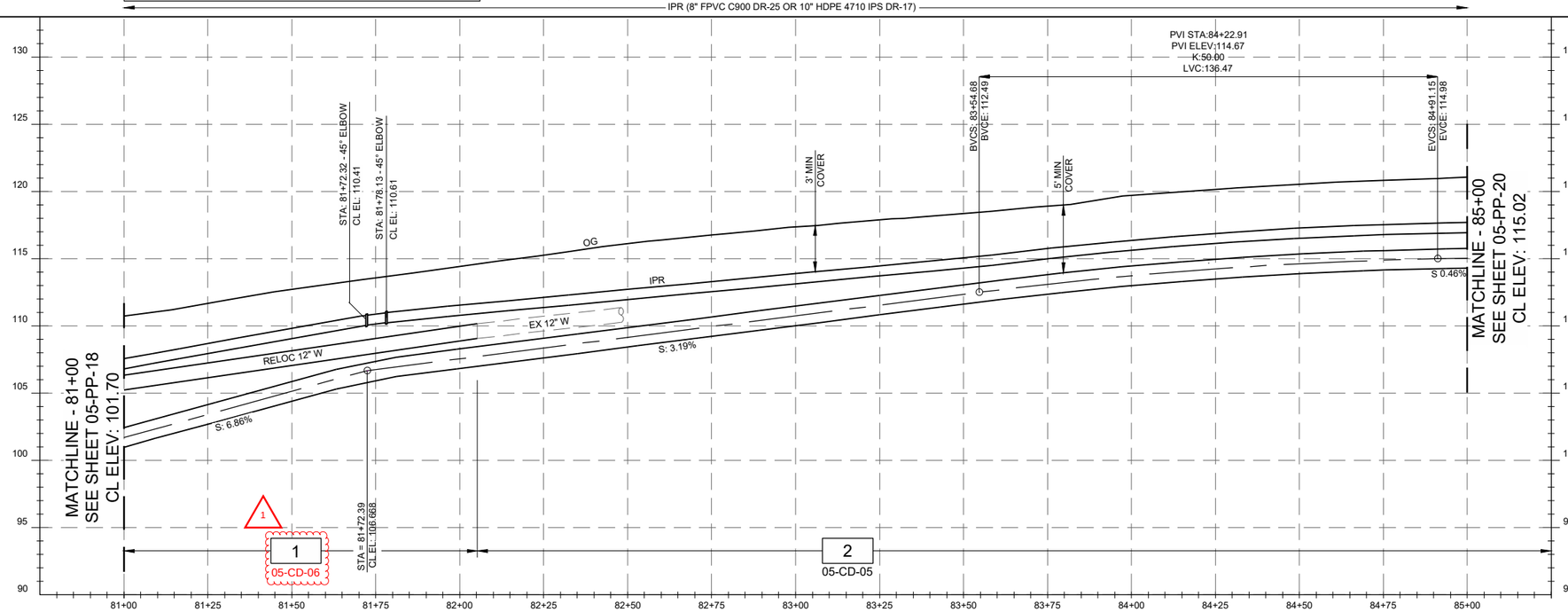

NOTES:

1. THE CONTRACTOR SHALL COMPLY WITH THE GENERAL CIVIL NOTES AND PERMITTING GENERAL NOTES.
2. HORIZONTAL ALIGNMENT AND PROFILE VERTICAL CURVES HEREIN ARE DESIGNED WITH THE MIN BENDING RADIUS OF THE LARGEST PIPELINE ASSUMING FPVC IS SELECTED. SMALLER BEND RADII MAY BE FEASIBLE DEPENDING ON THE PIPELINE MATERIAL AND LOCATION. THE CONTRACTOR MAY SUBMIT FOR APPROVAL MINOR HORIZONTAL ALIGNMENT CHANGES AND PROFILE VERTICAL CHANGES SO AS IT REDUCES FIELD CONFLICTS, REDUCES FITTINGS WHERE POSSIBLE, IS NOT ZERO SLOPED, AND DOES NOT RESULT IN A HIGH-SPOT.
3. PER SO CAL GAS REQUIREMENTS, ANY EXCAVATION WITHIN 10-FT OF A SO CAL GAS HIGH PRESSURE NATURAL GAS PIPELINE MUST BE COORDINATED THROUGH UNDERGROUND SERVICES ALERT (811) WITH A SO CAL GAS CO. STANDBY EMPLOYEE. IN ADDITION, ANY EXCAVATION, SUBGRADE REMOVAL, OR COMPACTION PERFORMED WITH 2' OF THE EDGE OF A SO CAL GAS PIPELINE BUT BE DONE UTILIZING HAND OPERATED TOOLS. ALL HIGH-PRESSURE GAS LINE EXCAVATIONS MUST HAVE A SOCAL GAS EMPLOYEE ON SITE.

CONSTRUCTION KEY NOTES:

(1.) INSTALL WRF OFFSITE PIPELINES, VALVES, AND APPURTENANCES PER HORIZONTAL PLAN AND VERTICAL PROFILE. ALIGNMENT IS CL OF FM2 UNLESS OTHERWISE NOTED. ORDER, PLACEMENT, AND REQUIRED CLEARANCES SHALL BE DETERMINED PER SPECIFIED TRENCH DETAIL UNDER PROFILE. SIZE & CLASS OF CARRIER AND/OR CASING PIPE MATERIALS ARE LISTED SCHEMATICALLY ABOVE PROFILE.

2. 12"PVC W TO BE ABANDONED AND FILLED WITH TYPE 2 LCC OR DEMOLISHED AS NEEDED IN CONJUNCTION WITH APPROVED BYPASS PLAN.

POTHOLING RESULTS:

EXISTING POTHOLING LOCATIONS AND RESULTS ARE APPROXIMATE, NOT SURVEYED, AND DO NOT PRECLUDE THE CONTRACTOR'S SOLE RESPONSIBILITY TO COMPLY WITH UTILITY VERIFICATION REQUIREMENTS.

(49.) 9" A.C. PVMNT, 48" CVR, 16"HPG.
(50.) 8" A.C. PVMNT, 50" CVR, 12"W

20 0 20 40 FEET
HORIZ SCALE 1"=20'
5 0 5 10 FEET
VERT SCALE 1"=5'

REGISTERED PROFESSIONAL ENGINEER
MICHAEL P. PLAN
No. C67194
CIVIL
STATE OF CALIFORNIA
05/29/2020

DESIGN	P WEBSTER
DRAWN	P WEBSTER
CHECKED	T LEWIS
APPROVED	M FISHER

WATERWORKS ENGINEERS
2260 Douglas Blvd. Suite 105 • Roseville, CA 95661 • 916-780-9888

CITY OF MORRO BAY
WATER RECLAMATION FACILITY
LIFT STATION AND OFFSITE PIPELINES

PLAN AND PROFILE
FORCE MAIN PLAN AND PROFILE
STA 81+00 TO STA 85+00

DATE MAY 2020
PROJECT NUMBER 17-082
DRAWING NUMBER 05-PP-19
SHEET NUMBER 42

L:\CAD\PROJECTS\17-082 MORRO BAY PS AND PIPELINE_(S)\PROJECT FILES\DELIVERABLES\1782D-05PP119.DWG

JOB NUMBER: 17-082 FILENAME: 1782D-05PP119.DWG PLOT DATE: 05/23/20 PLOT TIME: 14:41:24

CONFORMED SET - DEC 2020

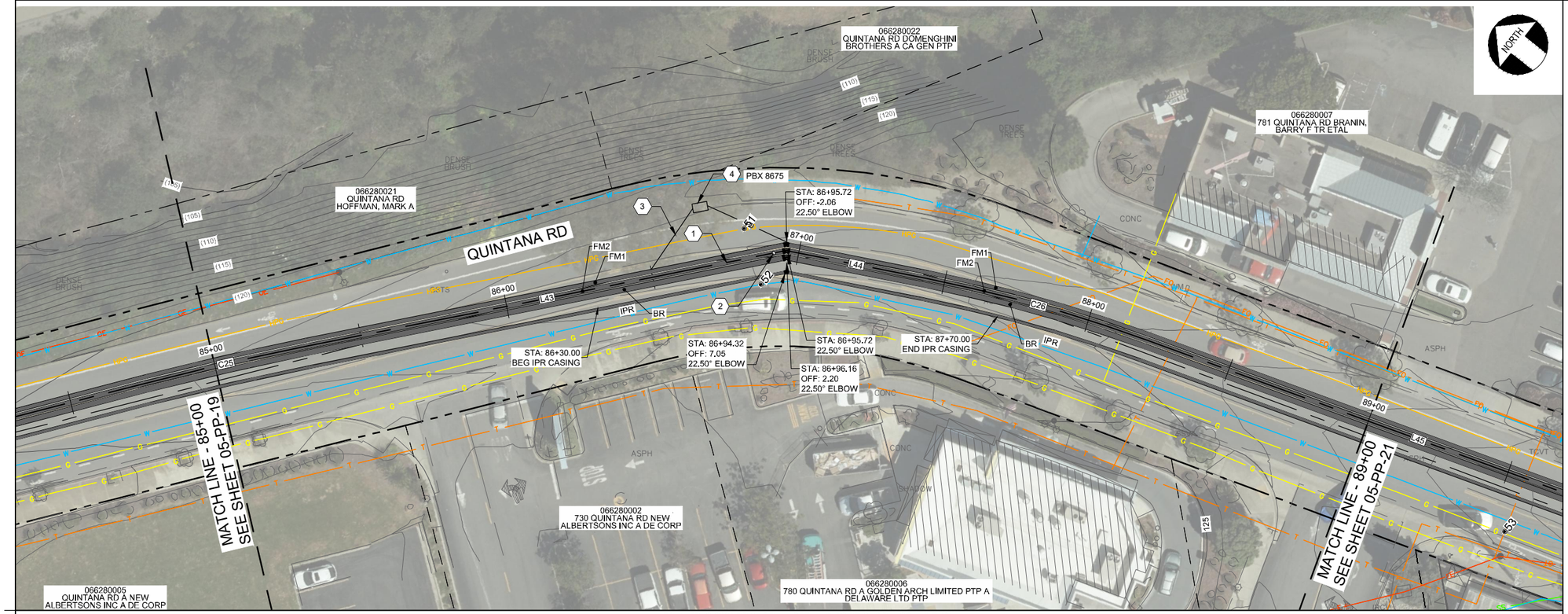

FO (4" FPVC C900 DR-25 OR 4" HDPE 4710 IPS DR-21 OR 4" SCH-40 PVC1)
FM1 (12" FPVC C900 DR-25 OR 16" HDPE 4710 IPS DR-11)
FM2 (16" FPVC C900 DR-25 OR 20" HDPE 4710 IPS DR-11)
BR (18" FPVC C900 DR-25 OR 20" HDPE 4710 IPS DR-17)
IPR (8" FPVC C900 DR-25 OR 10" HDPE 4710 IPS DR-17) — IPR (8" FPVC C900 DR-17 OR 10" HDPE 4710 IPS DR-17) IN CASING PER DET 1/05-CD-15 — IPR (8" FPVC C900 DR-25 OR 10" HDPE 4710 IPS DR-17)

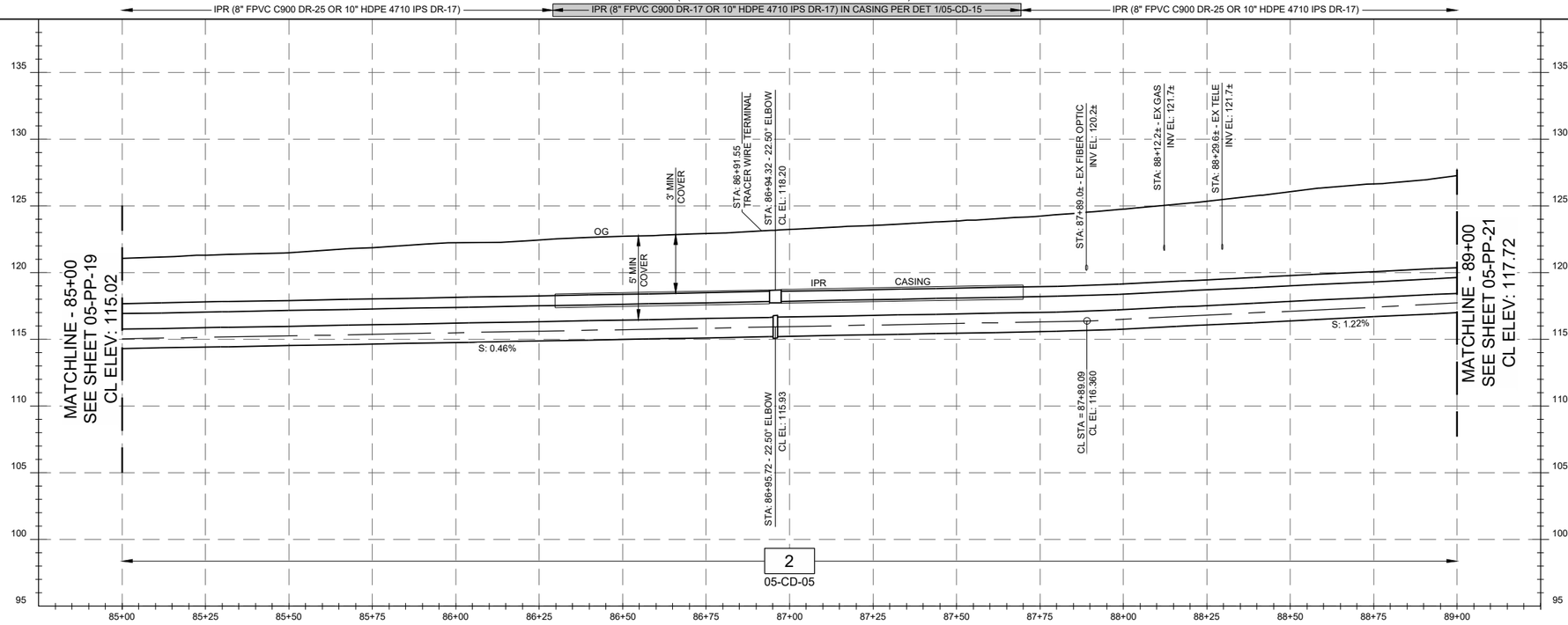

2
05-CD-05

NOTES:

1. THE CONTRACTOR SHALL COMPLY WITH THE GENERAL CIVIL NOTES AND PERMITTING GENERAL NOTES.
2. HORIZONTAL ALIGNMENT AND PROFILE VERTICAL CURVES HEREIN ARE DESIGNED WITH THE MIN BENDING RADIUS OF THE LARGEST PIPELINE ASSUMING FPVC IS SELECTED. SMALLER BEND RADII MAY BE FEASIBLE DEPENDING ON THE PIPELINE MATERIAL AND LOCATION. THE CONTRACTOR MAY SUBMIT FOR APPROVAL MINOR HORIZONTAL ALIGNMENT CHANGES AND PROFILE VERTICAL CHANGES SO AS IT REDUCES FIELD CONFLICTS, REDUCES FITTINGS WHERE POSSIBLE, IS NOT ZERO SLOPED, AND DOES NOT RESULT IN A HIGH-SPOT.
3. PER SO CAL GAS REQUIREMENTS, ANY EXCAVATION WITHIN 10-FT OF A SO CAL GAS HIGH PRESSURE NATURAL GAS PIPELINE MUST BE COORDINATED THROUGH UNDERGROUND SERVICES ALERT (811) WITH A SO CAL GAS CO. STANDBY EMPLOYEE. IN ADDITION, ANY EXCAVATION, SUBGRADE REMOVAL, OR COMPACTION PERFORMED WITH 2' OF THE EDGE OF A SO CAL GAS PIPELINE BUT BE DONE UTILIZING HAND OPERATED TOOLS. ALL HIGH-PRESSURE GAS LINE EXCAVATIONS MUST HAVE A SOCAL GAS EMPLOYEE ON SITE.

CONSTRUCTION KEY NOTES:

1. INSTALL WRF OFFSITE PIPELINES, VALVES, AND APPURTENANCES PER HORIZONTAL PLAN AND VERTICAL PROFILE. ALIGNMENT IS CL OF FM2 UNLESS OTHERWISE NOTED. ORDER, PLACEMENT, AND REQUIRED CLEARANCES SHALL BE DETERMINED PER SPECIFIED TRENCH DETAIL UNDER PROFILE. SIZE & CLASS OF CARRIER AND/OR CASING PIPE MATERIALS ARE LISTED SCHEMATICALLY ABOVE PROFILE.
2. INSTALL TRACER WIRE TERMINAL (2060) LOCATE ON CL OF FM2
3. WHERE FO DIVERGES FROM MAIN ALIGNMENT INSTALL PER DET 1/05-CD-09.
4. INSTALL FIBER PULLBOX PER DWG 00-E-04/VLT SIZE S534

POTHOLING RESULTS:

EXISTING PPOTHOLING LOCATIONS AND RESULTS ARE APPROXIMATE, NOT SURVEYED, AND DO NOT PRECLUDE THE CONTRACTOR'S SOLE RESPONSIBILITY TO COMPLY WITH UTILITY VERIFICATION REQUIREMENT.

(51.) 7" A.C. PVMNT, 48" CVR, 16"HPG.
(52.) 8" A.C. PVMNT, 43" CVR, 12"W.

20 0 20 40 FEET
HORIZ SCALE 1"=20'
5 0 5 10 FEET
VERT SCALE 1"=5'

REGISTERED PROFESSIONAL ENGINEER
MICHAEL P. FISHER
No. C61794
CIVIL
STATE OF CALIFORNIA
05/29/2020

DESIGN	P WEBSTER
DRAWN	P WEBSTER
CHECKED	T LEWIS
APPROVED	M FISHER

WATERWORKS ENGINEERS
2260 Douglas Blvd. Suite 105 • Roseville, CA 95661 • 916-780-9888

CITY OF MORRO BAY
WATER RECLAMATION FACILITY
LIFT STATION AND OFFSITE PIPELINES

PLAN AND PROFILE
FORCE MAIN PLAN AND PROFILE
STA 85+00 TO STA 89+00

DATE	MAY 2020
PROJECT NUMBER	17-082
DRAWING NUMBER	05-PP-20
SHEET NUMBER	43

CONFORMED SET - DEC 2020

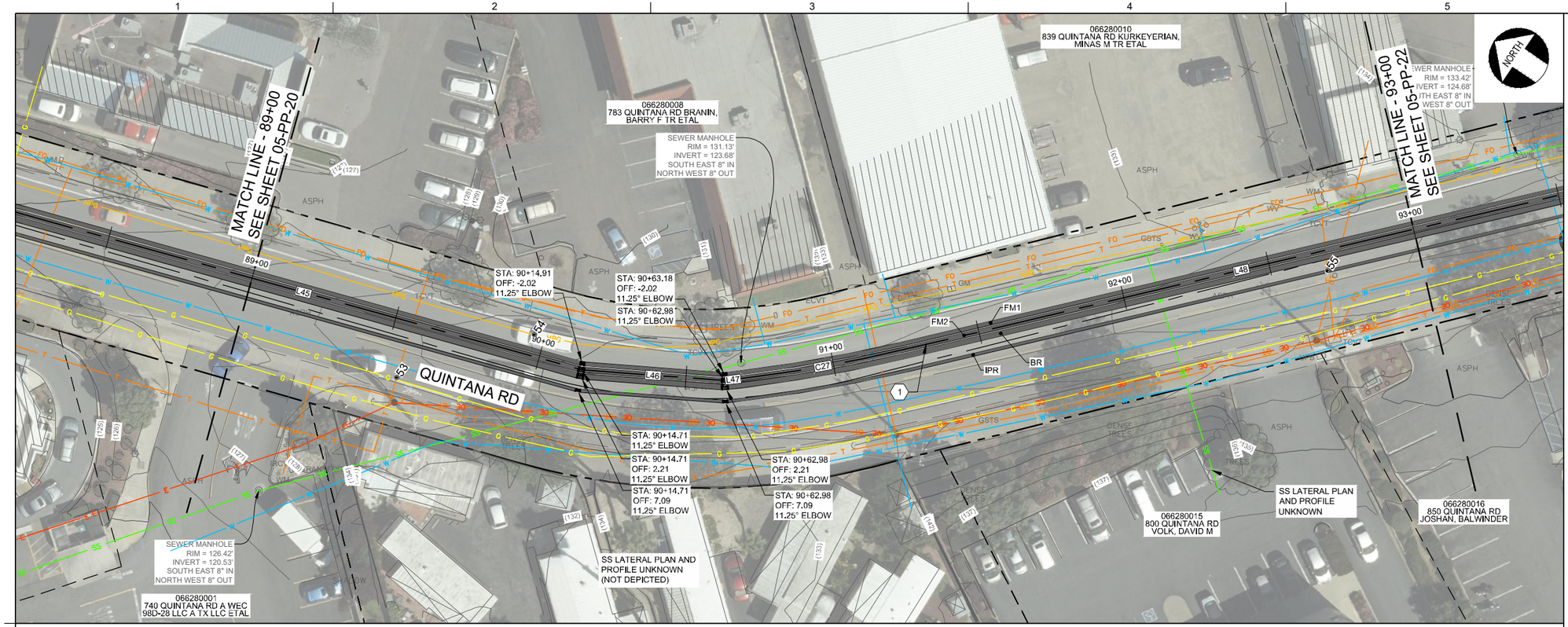

FO (4" FPVC C900 DR-25 OR 4" HDPE 4710 IPS DR-21 OR 4" SCH-40 PVC1)
FM1 (12" FPVC C900 DR-25 OR 16" HDPE 4710 IPS DR-11)
FM2 (16" FPVC C900 DR-25 OR 20" HDPE 4710 IPS DR-11)
BR (18" FPVC C900 DR-25 OR 20" HDPE 4710 IPS DR-17)
IPR (8" FPVC C900 DR-25 OR 10" HDPE 4710 IPS DR-17)

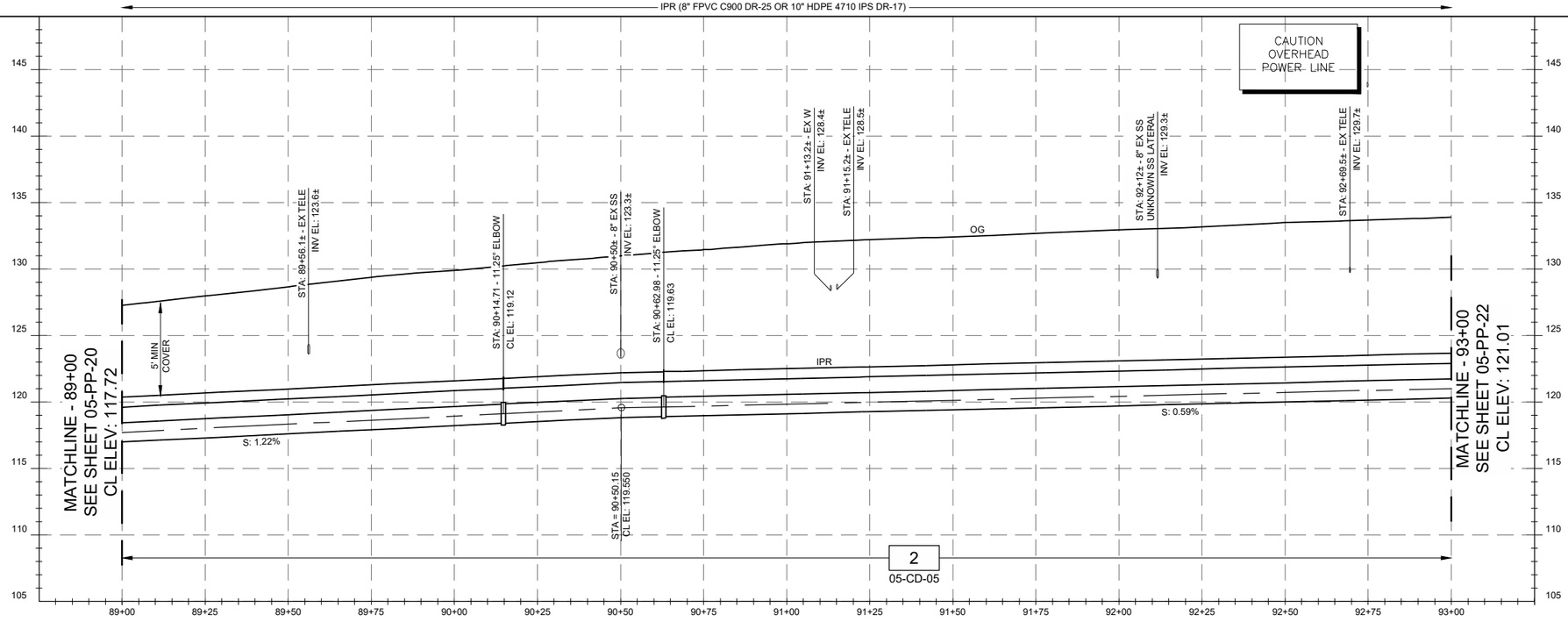

2
05-CD-05

NOTES:

1. THE CONTRACTOR SHALL COMPLY WITH THE GENERAL CIVIL NOTES AND PERMITTING GENERAL NOTES.
2. HORIZONTAL ALIGNMENT AND PROFILE VERTICAL CURVES HEREIN ARE DESIGNED WITH THE MIN BENDING RADIUS OF THE LARGEST PIPELINE ASSUMING FPVC IS SELECTED. SMALLER BEND RADII MAY BE FEASIBLE DEPENDING ON THE PIPELINE MATERIAL AND LOCATION. THE CONTRACTOR MAY SUBMIT FOR APPROVAL MINOR HORIZONTAL ALIGNMENT CHANGES AND PROFILE VERTICAL CHANGES SO AS IT REDUCES FIELD CONFLICTS, REDUCES FITTINGS WHERE POSSIBLE, IS NOT ZERO SLOPED, AND DOES NOT RESULT IN A HIGH-SPOT.
3. PER SO CAL GAS REQUIREMENTS, ANY EXCAVATION WITHIN 10-FT OF A SO CAL GAS HIGH PRESSURE NATURAL GAS PIPELINE MUST BE COORDINATED THROUGH UNDERGROUND SERVICES ALERT (811) WITH A SO CAL GAS CO. STANDBY EMPLOYEE. IN ADDITION, ANY EXCAVATION, SUBGRADE REMOVAL, OR COMPACTION PERFORMED WITH 2' OF THE EDGE OF A SO CAL GAS PIPELINE BUT BE DONE UTILIZING HAND OPERATED TOOLS. ALL HIGH-PRESSURE GAS LINE EXCAVATIONS MUST HAVE A SOCAL GAS EMPLOYEE ON SITE.

CONSTRUCTION KEY NOTES:

(1.) INSTALL WRF OFFSITE PIPELINES, VALVES, AND APPURTENANCES PER HORIZONTAL PLAN AND VERTICAL PROFILE. ALIGNMENT IS CL OF FM2 UNLESS OTHERWISE NOTED. ORDER, PLACEMENT, AND REQUIRED CLEARANCES SHALL BE DETERMINED PER SPECIFIED TRENCH DETAIL UNDER PROFILE. SIZE & CLASS OF CARRIER AND/OR CASING PIPE MATERIALS ARE LISTED SCHEMATICALLY ABOVE PROFILE.

POTHOLING RESULTS:

EXISTING POTHOLING LOCATIONS AND RESULTS ARE APPROXIMATE, NOT SURVEYED, AND DO NOT PRECLUDE THE CONTRACTOR'S SOLE RESPONSIBILITY TO COMPLY WITH UTILITY VERIFICATION REQUIREMENTS.

(53.) 5" A.C. PVMNT, 57" CVR, 65"DEPTH, TELE CONDUIT.
(54.) 7"A.C. PVMNT, 50" CVR, 16" HPG.
(55.) 8" A.C. PVMNT, 43" CVR, 53" DEPTH, TELE CONDUIT.

20 0 20 40 FEET
HORIZ SCALE 1"=20'
5 0 5 10 FEET
VERT SCALE 1"=5'

REGISTERED PROFESSIONAL ENGINEER
MICHAEL P. WEBSTER
No. C67194
CIVIL
STATE OF CALIFORNIA
05/29/2020

DESIGN	P WEBSTER
DRAWN	P WEBSTER
CHECKED	T LEWIS
APPROVED	M FISHER

WATERWORKS ENGINEERS
2260 Douglas Blvd., Suite 105 • Roseville, CA 95661 • 916-780-9888

CITY OF MORRO BAY
WATER RECLAMATION FACILITY
LIFT STATION AND OFFSITE PIPELINES

PLAN AND PROFILE
FORCE MAIN PLAN AND PROFILE
STA 89+00 TO STA 93+00

DATE	MAY 2020
PROJECT NUMBER	17-082
DRAWING NUMBER	05-PP-21
SHEET NUMBER	44

L:\CAD\PROJECTS\17-082 MORRO BAY PS AND PIPELINE_(S)\PROJECT FILES\DELIVERABLES\1782D-05PP121.DWG

JOB NUMBER: 17-082 FILENAME: 1782D-05PP121.DWG PLOT DATE: 05/23/20 PLOT TIME: 14:42:24

CONFORMED SET - DEC 2020

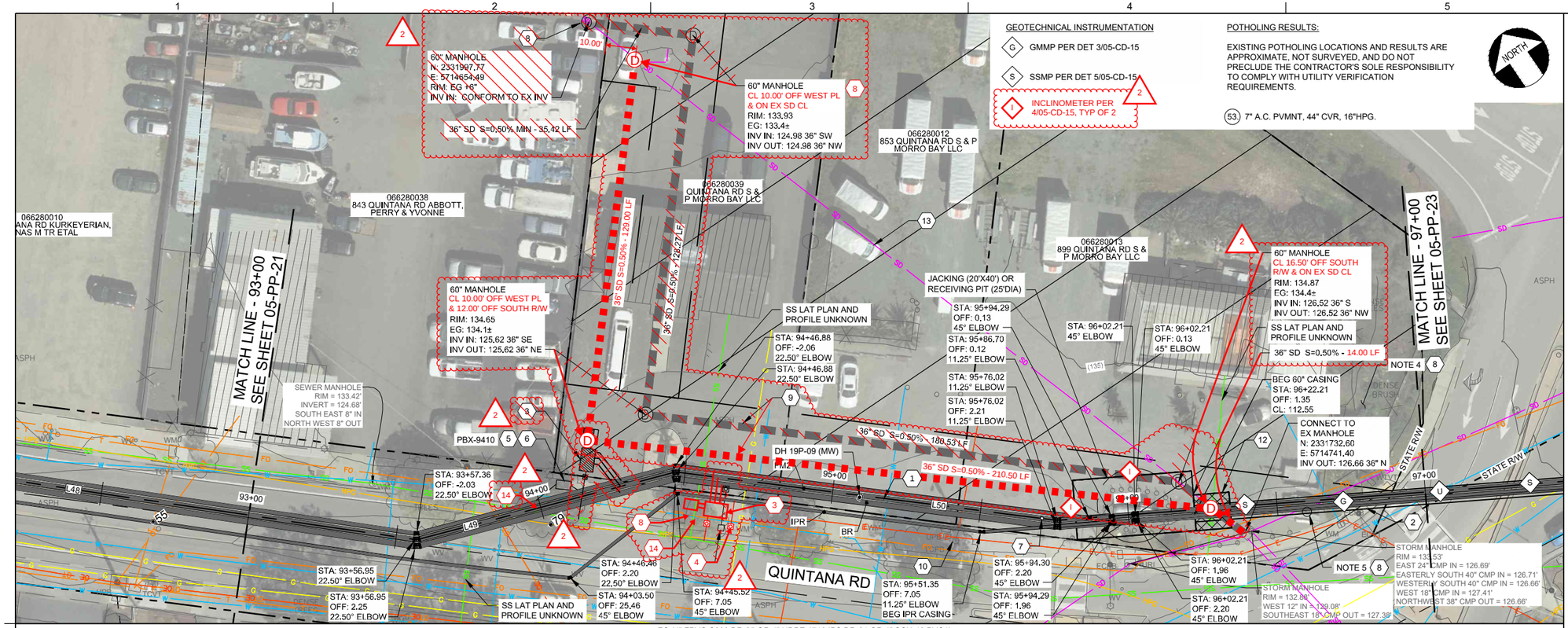

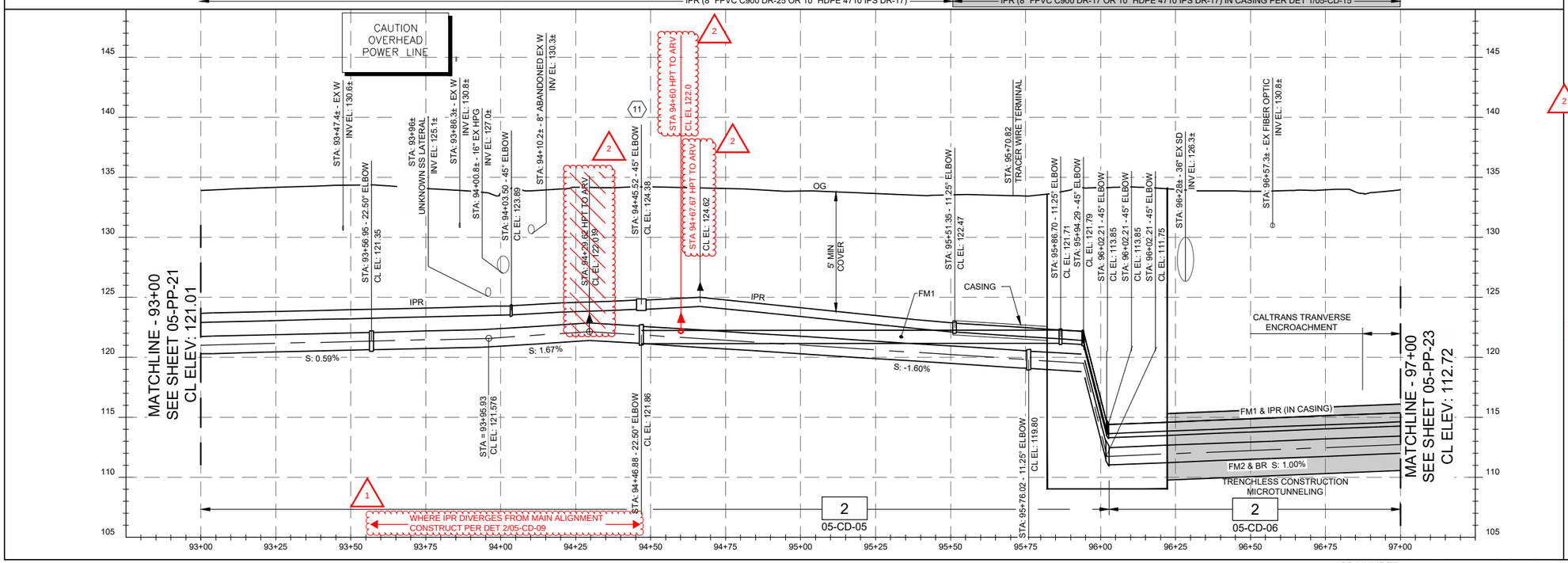

NOTES:

1. THE CONTRACTOR SHALL COMPLY WITH THE GENERAL CIVIL NOTES AND PERMITTING GENERAL NOTES.
2. HORIZONTAL ALIGNMENT AND PROFILE VERTICAL CURVES HEREIN ARE DESIGNED WITH THE MIN BENDING RADIUS OF THE LARGEST PIPELINE ASSUMING FPVC IS SELECTED. SMALLER BEND RADII MAY BE FEASIBLE DEPENDING ON THE PIPELINE MATERIAL AND LOCATION. THE CONTRACTOR MAY SUBMIT FOR APPROVAL MINOR HORIZONTAL ALIGNMENT CHANGES AND PROFILE VERTICAL CHANGES SO AS IT REDUCES FIELD CONFLICTS, REDUCES FITTINGS WHERE POSSIBLE, IS NOT ZERO SLOPED, AND DOES NOT RESULT IN A HIGH-SPOT.
3. PER SO CAL GAS REQUIREMENTS, ANY EXCAVATION WITHIN 10-FT OF A SO CAL GAS HIGH PRESSURE NATURAL GAS PIPELINE MUST BE COORDINATED THROUGH UNDERGROUND SERVICES ALERT (811) WITH A SO CAL GAS CO. STANDBY EMPLOYEE. IN ADDITION, ANY EXCAVATION, SUBGRADE REMOVAL, OR COMPACTION PERFORMED WITH 2' OF THE EDGE OF A SO CAL GAS PIPELINE BUT BE DONE UTILIZING HAND OPERATED TOOLS. ALL HIGH-PRESSURE GAS LINE EXCAVATIONS MUST HAVE A SOCAL GAS EMPLOYEE ON SITE.
4. 13" DIA STEEL CASED WATER WELL UNKNOWN. REPORTED AS ABANDONED IN SOUTHEST CORNER OF PROPERTY PER DOMENGHINI 2003: CASING CAPPED WITH STEEL PLATE IN LARGE CONCRETE FOOTING. STEEL CASING ASSUMED INTACT. MAY BE PARTIALLY BURIED.
5. MONITORING WELL "MW3". REPORTED AS DESTROYED PER GEORESEARCH 1993: SEAL REMOVED, WELL CASING PULLED, WELLBORE REAMED, HIGH YIELD BENTONITE GROUT INSTALLED 5' BGS TO DEPTH, CONCRETE FROM EG TO 5' BGS. MAY BE PARTIALLY BURIED.
6. EXISTING SS, W, AND GAS CROSSINGS TO APN# 066280039, 066280012, 066280013 ARE NOT DEPICTED IN PROFILE. STATUS OF SAID UTILITIES SHALL BE COORDINATED WITH CONSTRUCTION MANAGER

CONSTRUCTION KEY NOTES:

1. INSTALL WRF OFFSITE PIPELINES, VALVES, AND APPURTENANCES PER HORIZONTAL PLAN AND VERTICAL PROFILE. ALIGNMENT IS CL OF FM2 UNLESS OTHERWISE NOTED. ORDER, PLACEMENT, AND REQUIRED CLEARANCES SHALL BE DETERMINED PER SPECIFIED TRENCH DETAIL UNDER PROFILE. SIZE & CLASS OF CARRIER AND/OR CASING PIPE MATERIALS ARE LISTED SCHEMATICALLY ABOVE PROFILE.
2. INSTALL 60" DIA STEEL CASING AND ASSOCIATED CARRIER PIPES VIA MICROTUNNELING TRENCHLESS CONSTRUCTION. SHAFT LIMITS SHOWN HEREIN ARE FOR REFERENCE ONLY. CONTRACTOR RESPONSIBLE FOR SIZE AND CONFIGURATION OF SHAFTS TO MEET SELECTED MEANS AND METHODS.
3. ARV VAULT AND ODOR CONTROL PER DWG 06-CD-03
4. IPR ARV ENCLOSURE PER DWG DET 1/06-CD-5.
5. INSTALL FIBER PULLBOX PER DWG 00-E-04/VLT SIZE S534.
6. WHERE FO DIVERGES FROM MAIN ALIGNMENT INSTALL PER DET 1/05-CD-09.
7. INSTALL TRACER WIRE TERMINAL 2060 AND GROUND ROD 16410
8. HIGH PRIORITY UTILITY VERIFICATION REQUIRED, TYP OF 4 (STORM DRAIN, MW3 WELL CASING REMOVAL, UNKNOWN IRR WELL CASING , & FO IN SW)
9. INSTALL 353.5LF RELOCATED 36" CORRUGATED HDPE SD AND THREE (3) SD JUNCTION BOXES PER CITY STD DET C-9. MATCH AND GROUT IN UPSTREAM INVERT IN EX SDMH. MATCH DOWNSTREAM INVERT CONNECT. LAY RELOCATED SD AT CONSTANT SLOPE.
10. DEMOLISH LIGHT POLE.
11. HPG CROSSING. CONTRACTOR TO SUBMIT PIPE SUPPORT PLAN TO CONSTRUCTION MANAGER AND SOCAL GAS.
12. TUNNEL PORTAL STABILIZATION AREA.
13. ABANDON AND FILL 250-LF OF EX 38" SD WITH TYPE 2 LCC.
14. TREE REMOVAL, TYP OF 2

20 0 20 40 FEET
HORIZ SCALE 1"=20'
5 0 5 10 FEET
VERT SCALE 1"=5'

REGISTERED PROFESSIONAL ENGINEER
MICHAEL P. HAN
No. C67194
CIVIL
STATE OF CALIFORNIA
05/29/2020

DESIGN P WEBSTER
DRAWN P WEBSTER
CHECKED T LEWIS
APPROVED M FISHER

WATERWORKS ENGINEERS
2260 Douglas Blvd. | Suite 105 | Roseville, CA 95661 | 916-780-9888

CITY OF MORRO BAY
WATER RECLAMATION FACILITY
LIFT STATION AND OFFSITE PIPELINES

PLAN AND PROFILE
FORCE MAIN PLAN AND PROFILE
STA 93+00 TO STA 97+00

DATE MAY 2020
PROJECT NUMBER 17-082
DRAWING NUMBER 05-PP-22
SHEET NUMBER 45

L:\CAD\PROJECTS\17-082 MORRO BAY PS AND PIPELINE_(S)\PROJECT FILES\DELIVERABLES\1782D-05PP122.DWG

JOB NUMBER: 17-082 FILENAME: 1782D-05PP122.DWG PLOT DATE: 05/23/20 PLOT TIME: 14:42:55

CONFORMED SET - DEC 2020

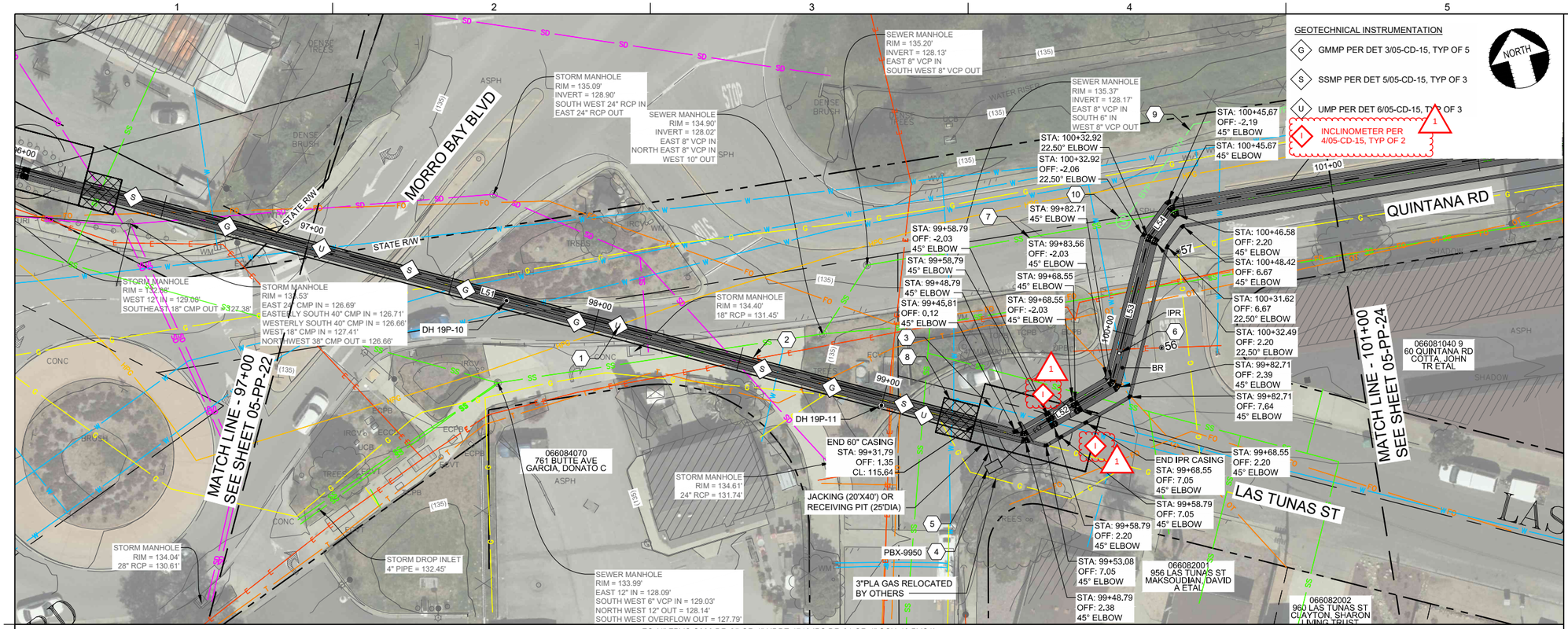

FO (4" FPVC C900 DR-25 OR 4" HDPE 4710 IPS DR-21 OR 4" SCH-40 PVC1)
FM1 (12" FPVC C900 DR-25 OR 16" HDPE 4710 IPS DR-11)
FM2 (16" FPVC C900 DR-25 OR 20" HDPE 4710 IPS DR-11)
BR (18" FPVC C900 DR-25 OR 20" HDPE 4710 IPS DR-17)
IPR (8" FPVC C900 DR-17 OR 10" HDPE 4710 IPS DR-17) IN CASING PER DET 1/05-CD-15
IPR (8" FPVC C900 DR-25 OR 10" HDPE 4710 IPS DR-17)

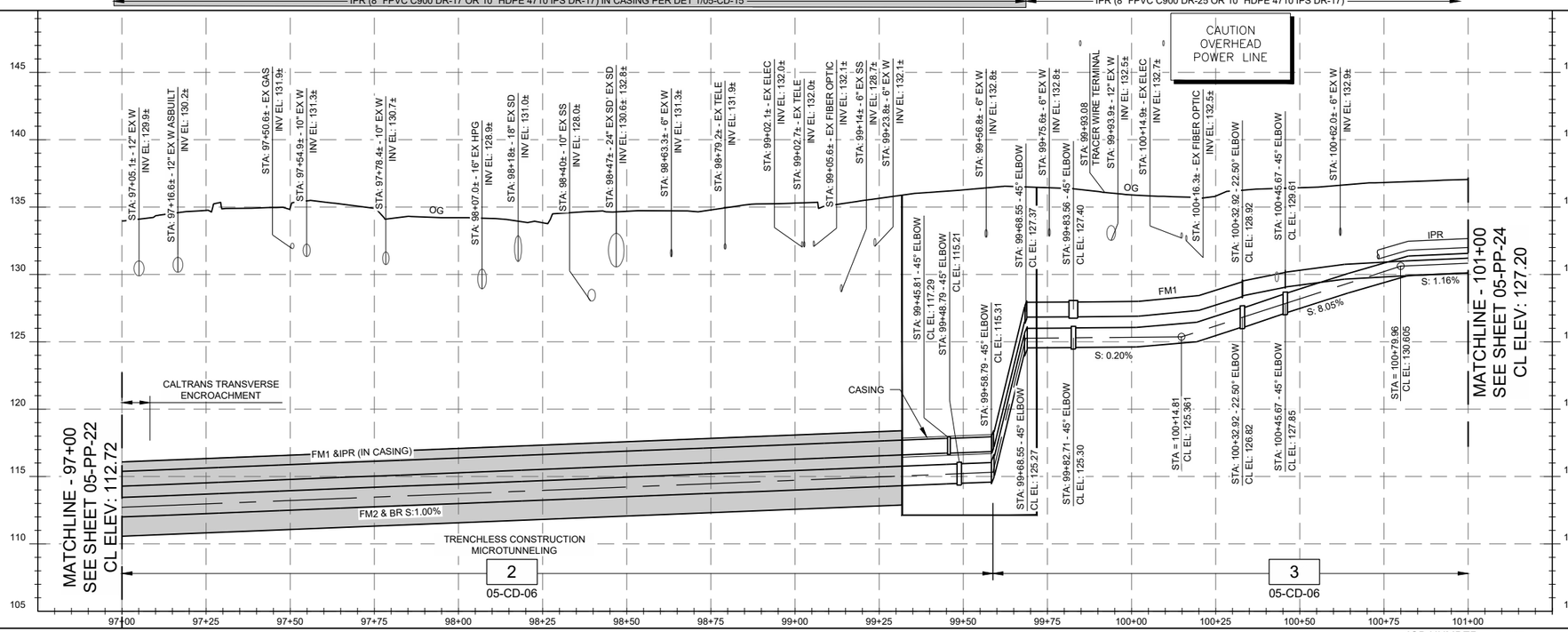

NOTES:

1. THE CONTRACTOR SHALL COMPLY WITH THE GENERAL CIVIL NOTES AND PERMITTING GENERAL NOTES.
2. HORIZONTAL ALIGNMENT AND PROFILE VERTICAL CURVES HEREIN ARE DESIGNED WITH THE MIN BENDING RADIUS OF THE LARGEST PIPELINE ASSUMING FPVC IS SELECTED. SMALLER BEND RADII MAY BE FEASIBLE DEPENDING ON THE PIPELINE MATERIAL AND LOCATION. THE CONTRACTOR MAY SUBMIT FOR APPROVAL MINOR HORIZONTAL ALIGNMENT CHANGES AND PROFILE VERTICAL CHANGES SO AS IT REDUCES FIELD CONFLICTS, REDUCES FITTINGS WHERE POSSIBLE, IS NOT ZERO SLOPED, AND DOES NOT RESULT IN A HIGH-SPOT.
3. PER SO CAL GAS REQUIREMENTS, ANY EXCAVATION WITHIN 10-FT OF A SO CAL GAS HIGH PRESSURE NATURAL GAS PIPELINE MUST BE COORDINATED THROUGH UNDERGROUND SERVICES ALERT (811) WITH A SO CAL GAS CO. STANDBY EMPLOYEE. IN ADDITION, ANY EXCAVATION, SUBGRADE REMOVAL, OR COMPACTION PERFORMED WITH 2' OF THE EDGE OF A SO CAL GAS PIPELINE BUT BE DONE UTILIZING HAND OPERATED TOOLS. ALL HIGH-PRESSURE GAS LINE EXCAVATIONS MUST HAVE A SOCAL GAS EMPLOYEE ON SITE.
4. GEOTECHNICAL BOREHOLES IN QUINTANA FROM EARTH SYSTEMS PACIFIC 2008 NOT DEPICTED.

CONSTRUCTION KEY NOTES:

1. INSTALL WRF OFFSITE PIPELINES, VALVES, AND APPURTENANCES PER HORIZONTAL PLAN AND VERTICAL PROFILE. ALIGNMENT IS CL OF FM2 UNLESS OTHERWISE NOTED. ORDER, PLACEMENT, AND REQUIRED CLEARANCES SHALL BE DETERMINED PER SPECIFIED TRENCH DETAIL UNDER PROFILE. SIZE & CLASS OF CARRIER AND/OR CASING PIPE MATERIALS ARE LISTED SCHEMATICALLY ABOVE PROFILE.
2. INSTALL 60" STEEL CASING AND ASSOCIATED CARRIER PIPES VIA MICROTUNNELING TRENCHLESS CONSTRUCTION. SHAFT LIMITS SHOWN HEREIN ARE FOR REFERENCE ONLY. CONTRACTOR RESPONSIBLE FOR SIZE AND CONFIGURATION OF PITS TO MEET SELECTED MEANS AND METHODS.
3. DEMOLISH, BYPASS, AND REPLACE 55-LF 6"W W/ 6" C900 DR-18 PVC (PVC2).
4. INSTALL FIBER PULLBOX PER DWG 00-E-04/VLT SIZE S534.
5. WHERE FO DIVERGES FROM MAIN ALIGNMENT INSTALL PER DET 1/05-CD-09
6. INSTALL TRACER WIRE TERMINAL (2060) AND GROUND WIRE (16410)
7. 8"SS FROM LS-3 TO BE ABANDONED AND FILLED WITH TYPE 2 LCC OR DEMOLISHED AS NEEDED IN CONJUNCTION WITH APPROVED LS-3 BYPASS PLAN. ABANDONED MANHOLES TO BE FILLED WITH TYPE 2 LCC AND CONE, GRADE RINGS, AND COVER REMOVED.
8. TUNNEL PORTAL STABILIZATION AREA
9. 8" LS-3 PASSIVE BYPASS LINE POTENTIAL ALIGNMENT ROUTE PER APPROVED BYPASS PLAN. LOCATE PIPE AS FAR FROM VEHICULAR TRAFFIC AS FEASIBLE WHILE WITHIN CITY R/W. PROTECT PIPE FROM VEHICULAR TRAFFIC. BURIED PIPE IN QUINTANA RD SHALL BE INSTALLED PER SEE DET 2 / 05-CD-09 AND MAY BE ABANDONED IN PLACE AND FILLED WITH TYPE 2 LCC. SEE SPEC 01550.
10. INSTALL LS-3 BYP SSMH PER CITY STD DET S-3.
    RIM: 136.3±
    INV 8"SS OUT: 129.4±

POTHOLING RESULTS:

EXISTING POTHOLING LOCATIONS AND RESULTS ARE APPROXIMATE, NOT SURVEYED, AND DO NOT PRECLUDE THE CONTRACTOR'S SOLE RESPONSIBILITY TO COMPLY WITH UTILITY VERIFICATION REQUIREMENTS.

56. 4" A.C. PVMNT, 25" CVR, 27" DEPTH, ELEC CONDUIT
57. 6" A.C. PVMNT, 29" CVR, 33" DEPTH, GAS

20 0 20 40 FEET
HORIZ SCALE 1"=20'
5 0 5 10 FEET
VERT SCALE 1"=5'

REGISTERED PROFESSIONAL ENGINEER PAUL MICHAEL WEBSTER No. C67194 CIVIL STATE OF CALIFORNIA
05/29/2020

DESIGN P WEBSTER
DRAWN P WEBSTER
CHECKED T LEWIS
APPROVED M FISHER

WATERWORKS ENGINEERS
2260 Douglas Blvd, Suite 100 • Roseville, CA 95661 • 916-780-2888

CITY OF MORRO BAY
WATER RECLAMATION FACILITY
LIFT STATION AND OFFSITE PIPELINES

PLAN AND PROFILE
FORCE MAIN PLAN AND PROFILE
STA 97+00 TO STA 101+00

DATE MAY 2020
PROJECT NUMBER 17-082
DRAWING NUMBER 05-PP-23
SHEET NUMBER 46

L:\CAD\PROJECTS\17-082 MORRO BAY PS AND PIPELINE_(S)\PROJECT FILES\DELIVERABLES\1782D-05PP123.DWG

JOB NUMBER: 17-082 FILENAME: 1782D-05PP123.DWG PLOT DATE: 06/8/20 PLOT TIME: 08:21:33

CONFORMED SET - DEC 2020

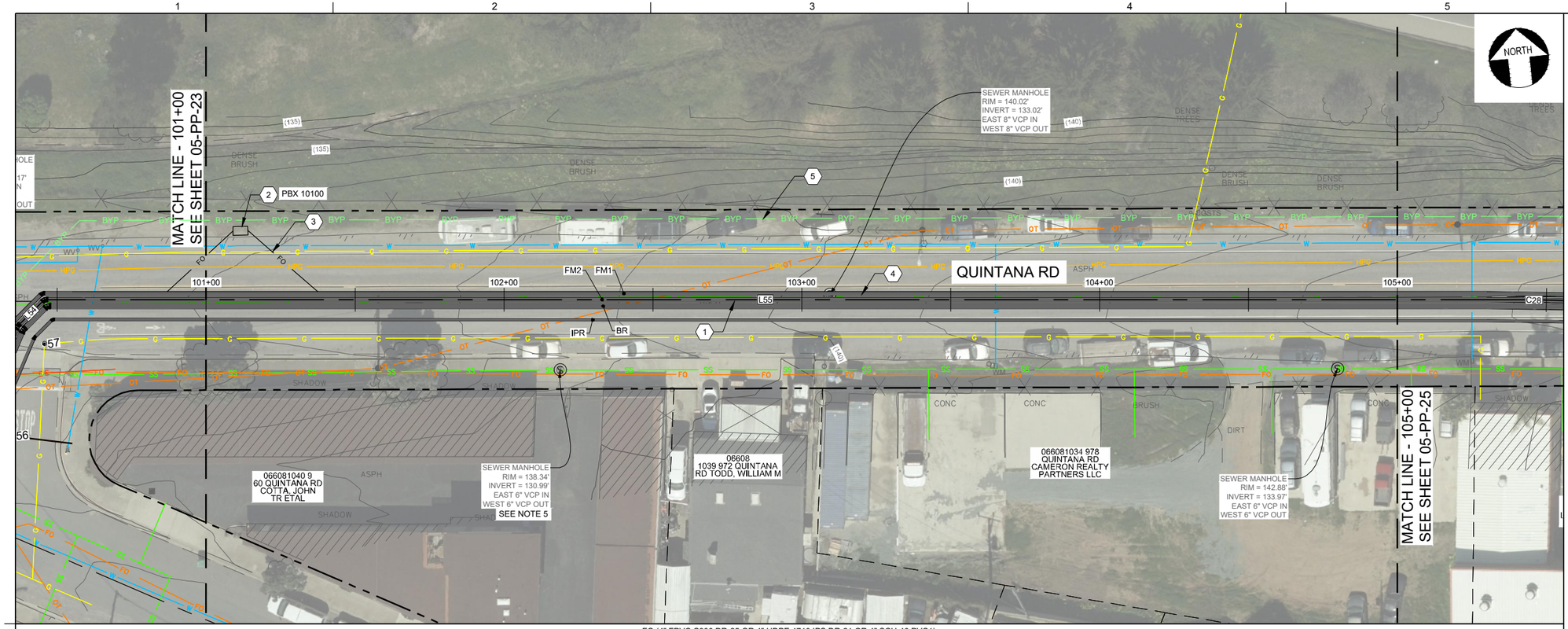

FO (4" FPVC C900 DR-25 OR 4" HDPE 4710 IPS DR-21 OR 4" SCH-40 PVC1)
FM1 (12" FPVC C900 DR-25 OR 16" HDPE 4710 IPS DR-11)
FM2 (16" FPVC C900 DR-25 OR 20" HDPE 4710 IPS DR-11)
BR (18" FPVC C900 DR-25 OR 20" HDPE 4710 IPS DR-17)
IPR (8" FPVC C900 DR-25 OR 10" HDPE 4710 IPS DR-17)

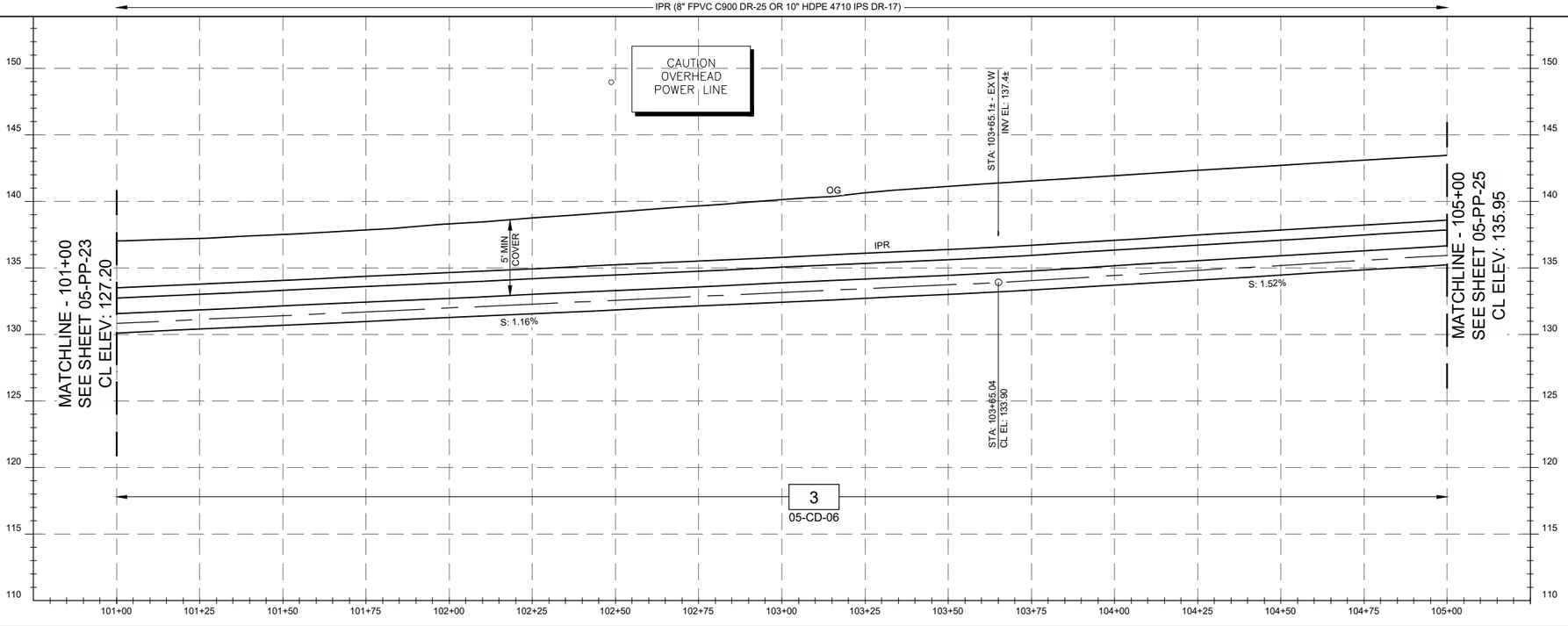

NOTES:

1. THE CONTRACTOR SHALL COMPLY WITH THE GENERAL CIVIL NOTES AND PERMITTING GENERAL NOTES.
2. HORIZONTAL ALIGNMENT AND PROFILE VERTICAL CURVES HEREIN ARE DESIGNED WITH THE MIN BENDING RADIUS OF THE LARGEST PIPELINE ASSUMING FPVC IS SELECTED. SMALLER BEND RADII MAY BE FEASIBLE DEPENDING ON THE PIPELINE MATERIAL AND LOCATION. THE CONTRACTOR MAY SUBMIT FOR APPROVAL MINOR HORIZONTAL ALIGNMENT CHANGES AND PROFILE VERTICAL CHANGES SO AS IT REDUCES FIELD CONFLICTS, REDUCES FITTINGS WHERE POSSIBLE, IS NOT ZERO SLOPED, AND DOES NOT RESULT IN A HIGH-SPOT.
3. PER SO CAL GAS REQUIREMENTS, ANY EXCAVATION WITHIN 10-FT OF A SO CAL GAS HIGH PRESSURE NATURAL GAS PIPELINE MUST BE COORDINATED THROUGH UNDERGROUND SERVICES ALERT (811) WITH A SO CAL GAS CO. STANDBY EMPLOYEE. IN ADDITION, ANY EXCAVATION, SUBGRADE REMOVAL, OR COMPACTION PERFORMED WITH 2' OF THE EDGE OF A SO CAL GAS PIPELINE BUT BE DONE UTILIZING HAND OPERATED TOOLS. ALL HIGH-PRESSURE GAS LINE EXCAVATIONS MUST HAVE A SOCAL GAS EMPLOYEE ON SITE.
4. GEOTECHNICAL BOREHOLES IN QUINTANA FROM EARTH SYSTEMS PACIFIC 2008 NOT DEPICTED.
5. LS-3 PASSIVE BYP DISCHARGE INTO EXISTING 6"SS ALONG SOUTH SIDE OF QUINTANA ONLY PERMITTED BETWEEN MAY 1 AND SEPTEMBER 31 AND REQUIRES OWNER APPROVAL.

CONSTRUCTION KEY NOTES:

1. INSTALL WRF OFFSITE PIPELINES, VALVES, AND APPURTENANCES PER HORIZONTAL PLAN AND VERTICAL PROFILE. ALIGNMENT IS CL OF FM2 UNLESS OTHERWISE NOTED. ORDER, PLACEMENT, AND REQUIRED CLEARANCES SHALL BE DETERMINED PER SPECIFIED TRENCH DETAIL UNDER PROFILE. SIZE & CLASS OF CARRIER AND/OR CASING PIPE MATERIALS ARE LISTED SCHEMATICALLY ABOVE PROFILE.
2. INSTALL FIBER PULLBOX PER DWG 00-E-04/VLT SIZE S534.
3. WHERE FO DIVERGES FROM MAIN ALIGNMENT INSTALL PER DET 1/05-CD-09.
4. 8"SS FROM LS-3 TO BE ABANDONED AND FILLED WITH TYPE 2 LCC OR DEMOLISHED AS NEEDED IN CONJUNCTION WITH APPROVED LS-3 BYPASS PLAN. ABANDONED MANHOLES TO BE FILLED WITH TYPE 2 LCC AND CONE, GRADE RINGS, AND COVER REMOVED.
5. 8" LS-3 PASSIVE BYPASS LINE POTENTIAL ALIGNMENT ROUTE PER APPROVED BYPASS PLAN. LOCATE PIPE AS FAR FROM VEHICULAR TRAFFIC AS FEASIBLE WHILE WITHIN CITY R/W. PROTECT PIPE FROM VEHICULAR TRAFFIC. SEE SPEC 01550.

20 0 20 40 FEET
HORIZ SCALE 1"=20'
5 0 5 10 FEET
VERT SCALE 1"=5'

REGISTERED PROFESSIONAL ENGINEER
MICHAEL P. PYBURN
No. C67194
CIVIL
STATE OF CALIFORNIA
05/29/2020

DESIGN P WEBSTER
DRAWN P WEBSTER
CHECKED T LEWIS
APPROVED M FISHER

WATERWORKS ENGINEERS
2260 Douglas Blvd., Suite 105 • Roseville, CA 95661 • 916-780-9888

CITY OF MORRO BAY
WATER RECLAMATION FACILITY
LIFT STATION AND OFFSITE PIPELINES

PLAN AND PROFILE
FORCE MAIN PLAN AND PROFILE
STA 101+00 TO STA 105+00

DATE MAY 2020
PROJECT NUMBER 17-082
DRAWING NUMBER 05-PP-24
SHEET NUMBER 47

L:\CAD\PROJECTS\17-082 MORRO BAY PS AND PIPELINE_(S)\PROJECT FILES\DELIVERABLES\1782D-05PP124.DWG

JOB NUMBER: 17-082 FILENAME: 1782D-05PP124.DWG PLOT DATE: 05/23/20 PLOT TIME: 14:43:53

CONFORMED SET - DEC 2020

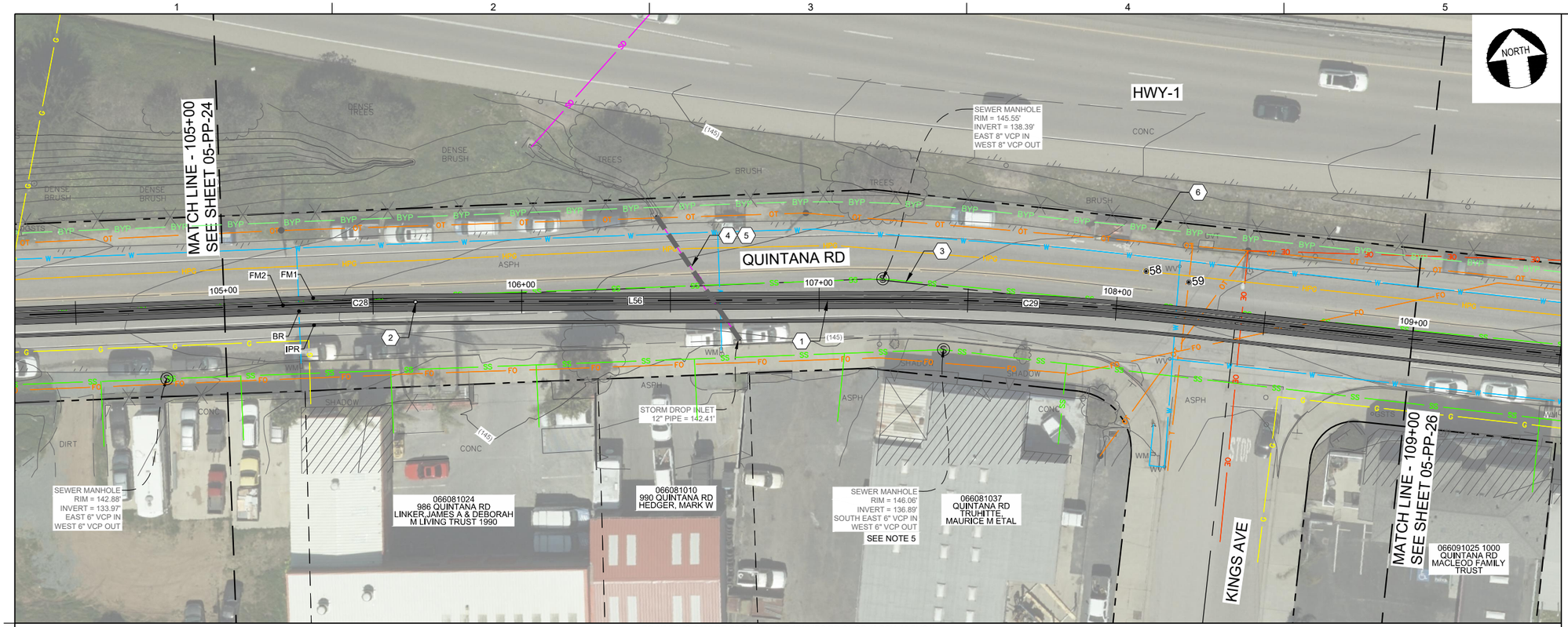

FO (4" FPVC C900 DR-25 OR 4" HDPE 4710 IPS DR-21 OR 4" SCH-40 PVC1)
FM1 (12" FPVC C900 DR-25 OR 16" HDPE 4710 IPS DR-11)
FM2 (16" FPVC C900 DR-25 OR 20" HDPE 4710 IPS DR-11)
BR (18" FPVC C900 DR-25 OR 20" HDPE 4710 IPS DR-17)
IPR (8" FPVC C900 DR-25 OR 10" HDPE 4710 IPS DR-17)

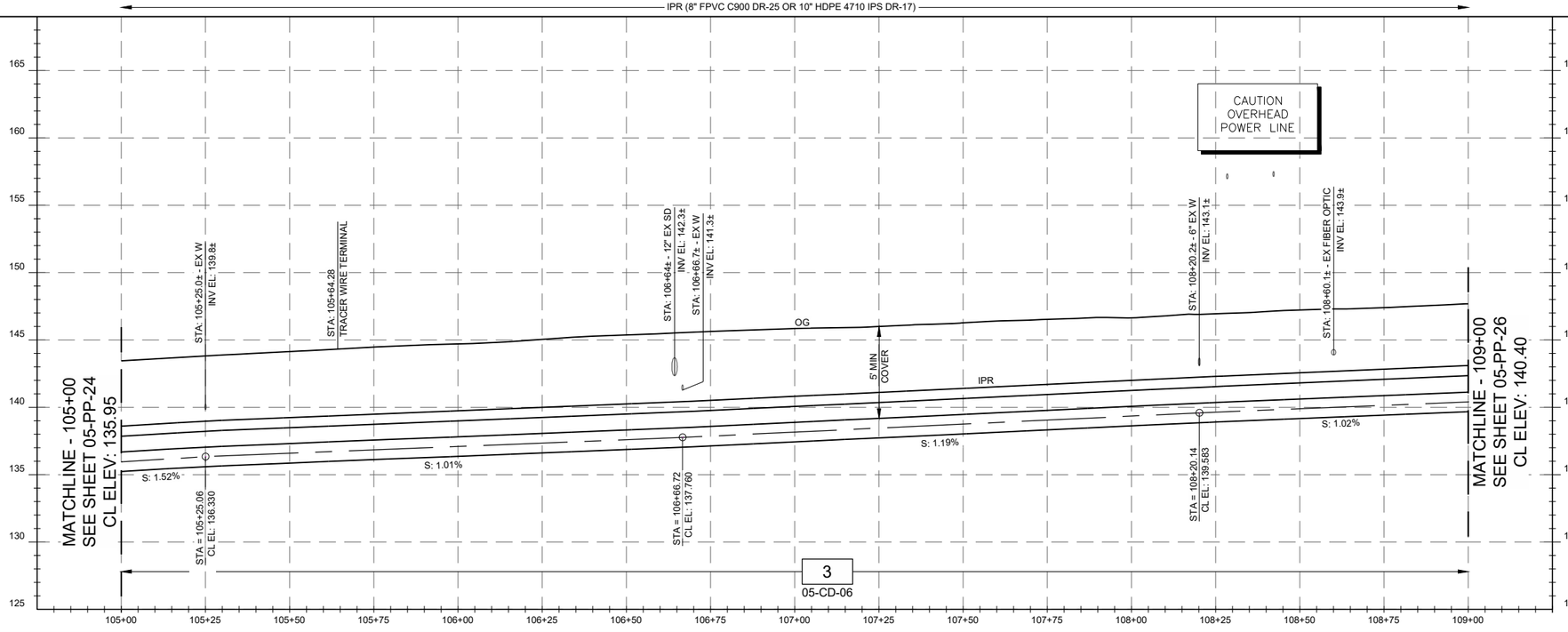

NOTES:

1. THE CONTRACTOR SHALL COMPLY WITH THE GENERAL CIVIL NOTES AND PERMITTING GENERAL NOTES.
2. HORIZONTAL ALIGNMENT AND PROFILE VERTICAL CURVES HEREIN ARE DESIGNED WITH THE MIN BENDING RADIUS OF THE LARGEST PIPELINE ASSUMING FPVC IS SELECTED. SMALLER BEND RADII MAY BE FEASIBLE DEPENDING ON THE PIPELINE MATERIAL AND LOCATION. THE CONTRACTOR MAY SUBMIT FOR APPROVAL MINOR HORIZONTAL ALIGNMENT CHANGES AND PROFILE VERTICAL CHANGES SO AS IT REDUCES FIELD CONFLICTS, REDUCES FITTINGS WHERE POSSIBLE, IS NOT ZERO SLOPED, AND DOES NOT RESULT IN A HIGH-SPOT.
3. PER SO CAL GAS REQUIREMENTS, ANY EXCAVATION WITHIN 10-FT OF A SO CAL GAS HIGH PRESSURE NATURAL GAS PIPELINE MUST BE COORDINATED THROUGH UNDERGROUND SERVICES ALERT (811) WITH A SO CAL GAS CO. STANDBY EMPLOYEE. IN ADDITION, ANY EXCAVATION, SUBGRADE REMOVAL, OR COMPACTION PERFORMED WITH 2' OF THE EDGE OF A SO CAL GAS PIPELINE BUT BE DONE UTILIZING HAND OPERATED TOOLS. ALL HIGH-PRESSURE GAS LINE EXCAVATIONS MUST HAVE A SOCAL GAS EMPLOYEE ON SITE.
4. GEOTECHNICAL BOREHOLES IN QUINTANA FROM EARTH SYSTEMS PACIFIC 2008 NOT DEPICTED.
5. LS-3 PASSIVE BYP DISCHARGE INTO EXISTING 6"SS ALONG SOUTH SIDE OF QUINTANA ONLY PERMITTED BETWEEN MAY 1 AND SEPTEMBER 31 AND REQUIRES OWNER APPROVAL..

CONSTRUCTION KEY NOTES:

1. INSTALL WRF OFFSITE PIPELINES, VALVES, AND APPURTENANCES PER HORIZONTAL PLAN AND VERTICAL PROFILE. ALIGNMENT IS CL OF FM2 UNLESS OTHERWISE NOTED. ORDER, PLACEMENT, AND REQUIRED CLEARANCES SHALL BE DETERMINED PER SPECIFIED TRENCH DETAIL UNDER PROFILE. SIZE & CLASS OF CARRIER AND/OR CASING PIPE MATERIALS ARE LISTED SCHEMATICALLY ABOVE PROFILE.
2. INSTALL TRACER WIRE TERMINAL (2060) LOCATE ON CL FM2.
3. 8"SS FROM LS-3 TO BE ABANDONED AND FILLED WITH TYPE 2 LCC OR DEMOLISHED AS NEEDED IN CONJUNCTION WITH APPROVED LS-3 BYPASS PLAN. ABANDONED MANHOLES TO BE FILLED WITH TYPE 2 LCC AND CONE, GRADE RINGS, AND COVER REMOVED.
4. AS DIRECTED BY CITY ENGINEER, REMOVE 50-LF EX CMP STORM DRAIN AND INSTALL 18" DIA CORRUGATED HDPE PIPE. MODIFY EX STORM DRAIN INLET/MH. GROUNT NEW HDPE INTO EX DRAIN STRUCTURE.
5. HPG CROSSING. CONTRACTOR TO SUBMIT PIPE SUPPORT PLAN TO CONSTRUCTION MANAGER AND SOCAL GAS.
6. 8" LS-3 PASSIVE BYPASS LINE POTENTIAL ALIGNMENT ROUTE PER APPROVED BYPASS PLAN. LOCATE PIPE AS FAR FROM VEHICULAR TRAFFIC AS FEASIBLE WHILE WITHIN CITY R/W. PROTECT PIPE FROM VEHICULAR TRAFFIC. SEE SPEC 01550.

POTHOLING RESULTS:

EXISTING POTHOLING LOCATIONS AND RESULTS ARE APPROXIMATE, NOT SURVEYED, AND DO NOT PRECLUDE THE CONTRACTOR'S SOLE RESPONSIBILITY TO COMPLY WITH UTILITY VERIFICATION REQUIREMENT.

58. 8" A.C. PVMNT, 48" CVR, 16"HPG
59. 6"A.C. PVMNT, 39"CVR, 43"DEPTH, TELE CONDUIT

20 0 20 40 FEET
HORIZ SCALE 1"=20'
5 0 5 10 FEET
VERT SCALE 1"=5'

REGISTERED PROFESSIONAL ENGINEER
No. C61794
CIVIL
STATE OF CALIFORNIA
05/29/2020

DESIGN	P WEBSTER
DRAWN	P WEBSTER
CHECKED	T LEWIS
APPROVED	M FISHER

WATERWORKS ENGINEERS
2260 Douglas Blvd, Suite 105 • Roseville, CA 95661 • 916-780-2888

CITY OF MORRO BAY
WATER RECLAMATION FACILITY
LIFT STATION AND OFFSITE PIPELINES

PLAN AND PROFILE
FORCE MAIN PLAN AND PROFILE
STA 105+00 TO STA 109+00

DATE	MAY 2020
PROJECT NUMBER	17-082
DRAWING NUMBER	05-PP-25
SHEET NUMBER	48

CONFORMED SET - DEC 2020

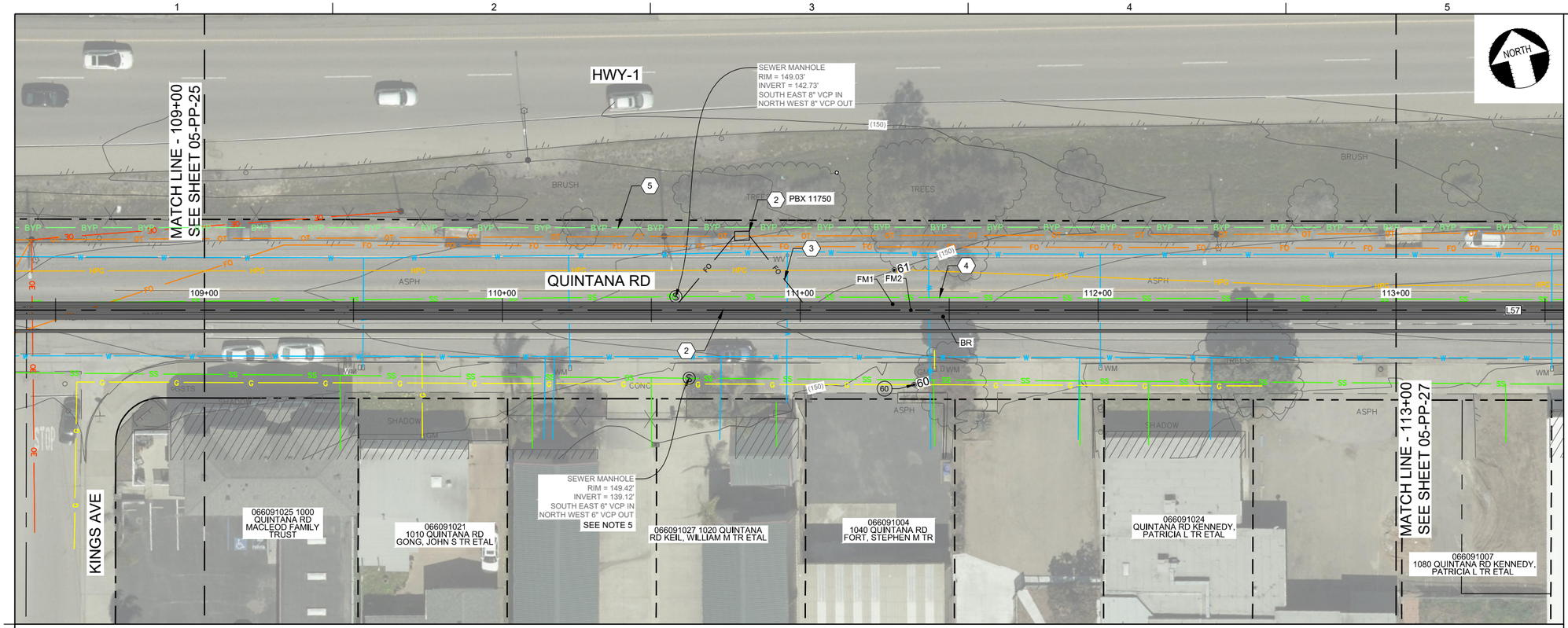

FO (4" FPVC C900 DR-25 OR 4" HDPE 4710 IPS DR-21 OR 4" SCH-40 PVC1)
FM1 (12" FPVC C900 DR-25 OR 16" HDPE 4710 IPS DR-11)
FM2 (16" FPVC C900 DR-25 OR 20" HDPE 4710 IPS DR-11)
BR (18" FPVC C900 DR-25 OR 20" HDPE 4710 IPS DR-17)
IPR (8" FPVC C900 DR-25 OR 10" HDPE 4710 IPS DR-17)

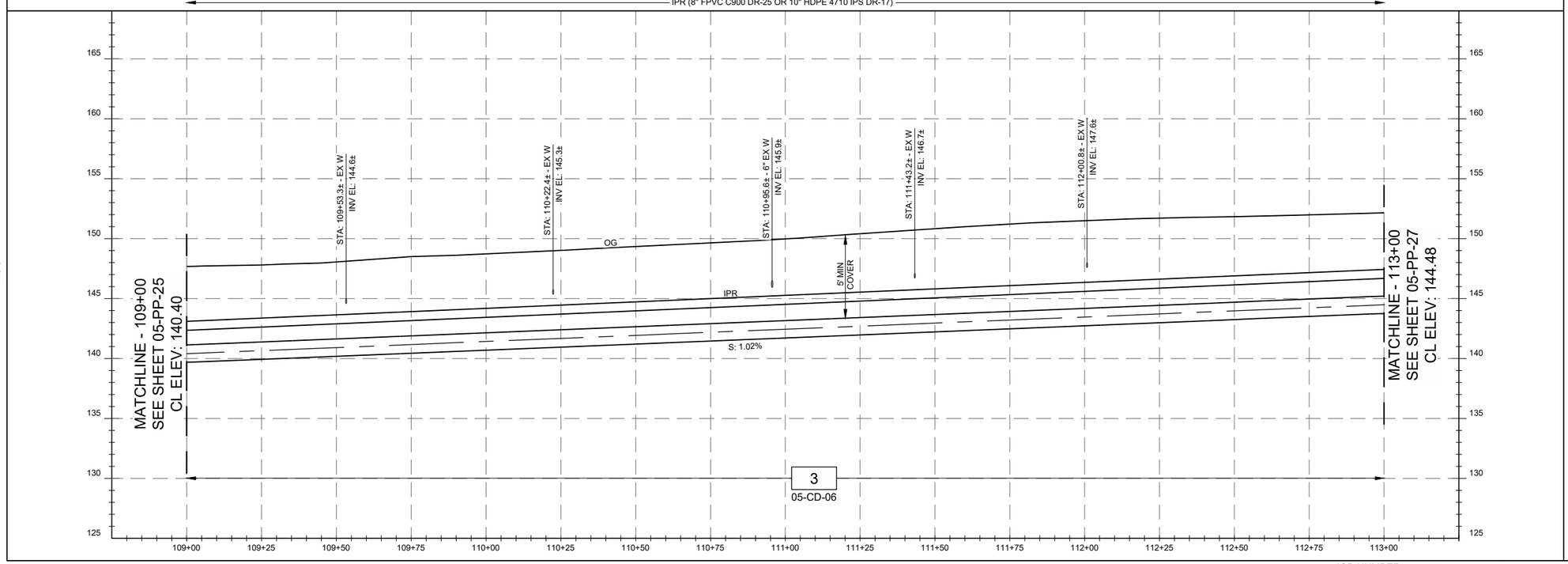

NOTES:

1. THE CONTRACTOR SHALL COMPLY WITH THE GENERAL CIVIL NOTES AND PERMITTING GENERAL NOTES.
2. HORIZONTAL ALIGNMENT AND PROFILE VERTICAL CURVES HEREIN ARE DESIGNED WITH THE MIN BENDING RADIUS OF THE LARGEST PIPELINE ASSUMING FPVC IS SELECTED. SMALLER BEND RADII MAY BE FEASIBLE DEPENDING ON THE PIPELINE MATERIAL AND LOCATION. THE CONTRACTOR MAY SUBMIT FOR APPROVAL MINOR HORIZONTAL ALIGNMENT CHANGES AND PROFILE VERTICAL CHANGES SO AS IT REDUCES FIELD CONFLICTS, REDUCES FITTINGS WHERE POSSIBLE, IS NOT ZERO SLOPED, AND DOES NOT RESULT IN A HIGH-SPOT.
3. PER SO CAL GAS REQUIREMENTS, ANY EXCAVATION WITHIN 10-FT OF A SO CAL GAS HIGH PRESSURE NATURAL GAS PIPELINE MUST BE COORDINATED THROUGH UNDERGROUND SERVICES ALERT (811) WITH A SO CAL GAS CO. STANDBY EMPLOYEE. IN ADDITION, ANY EXCAVATION, SUBGRADE REMOVAL, OR COMPACTION PERFORMED WITH 2' OF THE EDGE OF A SO CAL GAS PIPELINE BUT BE DONE UTILIZING HAND OPERATED TOOLS. ALL HIGH-PRESSURE GAS LINE EXCAVATIONS MUST HAVE A SOCAL GAS EMPLOYEE ON SITE.
4. GEOTECHNICAL BOREHOLES IN QUINTANA FROM EARTH SYSTEMS PACIFIC 2008 NOT DEPICTED.
5. LS-3 PASSIVE BYP DISCHARGE INTO EXISTING 6"SS ALONG SOUTH SIDE OF QUINTANA ONLY PERMITTED BETWEEN MAY 1 AND SEPTEMBER 31 AND REQUIRES OWNER APPROVAL.

CONSTRUCTION KEY NOTES:

1. INSTALL WRF OFFSITE PIPELINES, VALVES, AND APPURTENANCES PER HORIZONTAL PLAN AND VERTICAL PROFILE. ALIGNMENT IS CL OF FM2 UNLESS OTHERWISE NOTED. ORDER, PLACEMENT, AND REQUIRED CLEARANCES SHALL BE DETERMINED PER SPECIFIED TRENCH DETAIL UNDER PROFILE. SIZE & CLASS OF CARRIER AND/OR CASING PIPE MATERIALS ARE LISTED SCHEMATICALLY ABOVE PROFILE.
2. INSTALL FIBER PULLBOX PER DWG 00-E-04/VLT SIZE S534.
3. WHERE FO DIVERGES FROM MAIN ALIGNMENT INSTALL PER DET 1/05-CD-09.
4. 8"SS FROM LS-3 TO BE ABANDONED AND FILLED WITH TYPE 2 LCC OR DEMOLISHED AS NEEDED IN CONJUNCTION WITH APPROVED LS-3 BYPASS PLAN. ABANDONED MANHOLES TO BE FILLED WITH TYPE 2 LCC AND CONE, GRADE RINGS, AND COVER REMOVED.
5. 8" LS-3 PASSIVE BYPASS LINE POTENTIAL ALIGNMENT ROUTE PER APPROVED BYPASS PLAN. LOCATE PIPE AS FAR FROM VEHICULAR TRAFFIC AS FEASIBLE WHILE WITHIN CITY R/W. PROTECT PIPE FROM VEHICULAR TRAFFIC. SEE SPEC 01550.

POTHOLING RESULTS:

EXISTING POTHOLING LOCATIONS AND RESULTS ARE APPROXIMATE, NOT SURVEYED, AND DO NOT PRECLUDE THE CONTRACTOR'S SOLE RESPONSIBILITY TO COMPLY WITH UTILITY VERIFICATION REQUIREMENT.

60 5" CONC, 48" CVR, 51"DEEP, GAS

61 7" A.C., PVMNT, 43" CVR, 16"HPG

20 0 20 40 FEET
HORIZ SCALE 1"=20'

5 0 5 10 FEET
VERT SCALE 1"=5'

REGISTERED PROFESSIONAL ENGINEER
PAUL W. WEBSTER
No. C67194
CIVIL
STATE OF CALIFORNIA
05/29/2020

DESIGN	P WEBSTER
DRAWN	P WEBSTER
CHECKED	T LEWIS
APPROVED	M FISHER

WATERWORKS ENGINEERS
2260 Douglas Blvd, Suite 100 • Roseville, CA 95661 • 916-780-2888

CITY OF MORRO BAY
WATER RECLAMATION FACILITY
LIFT STATION AND OFFSITE PIPELINES

PLAN AND PROFILE

FORCE MAIN PLAN AND PROFILE STA 109+00 TO STA 113+00

DATE	MAY 2020
PROJECT NUMBER	17-082
DRAWING NUMBER	05-PP-26
SHEET NUMBER	49

CONFORMED SET - DEC 2020

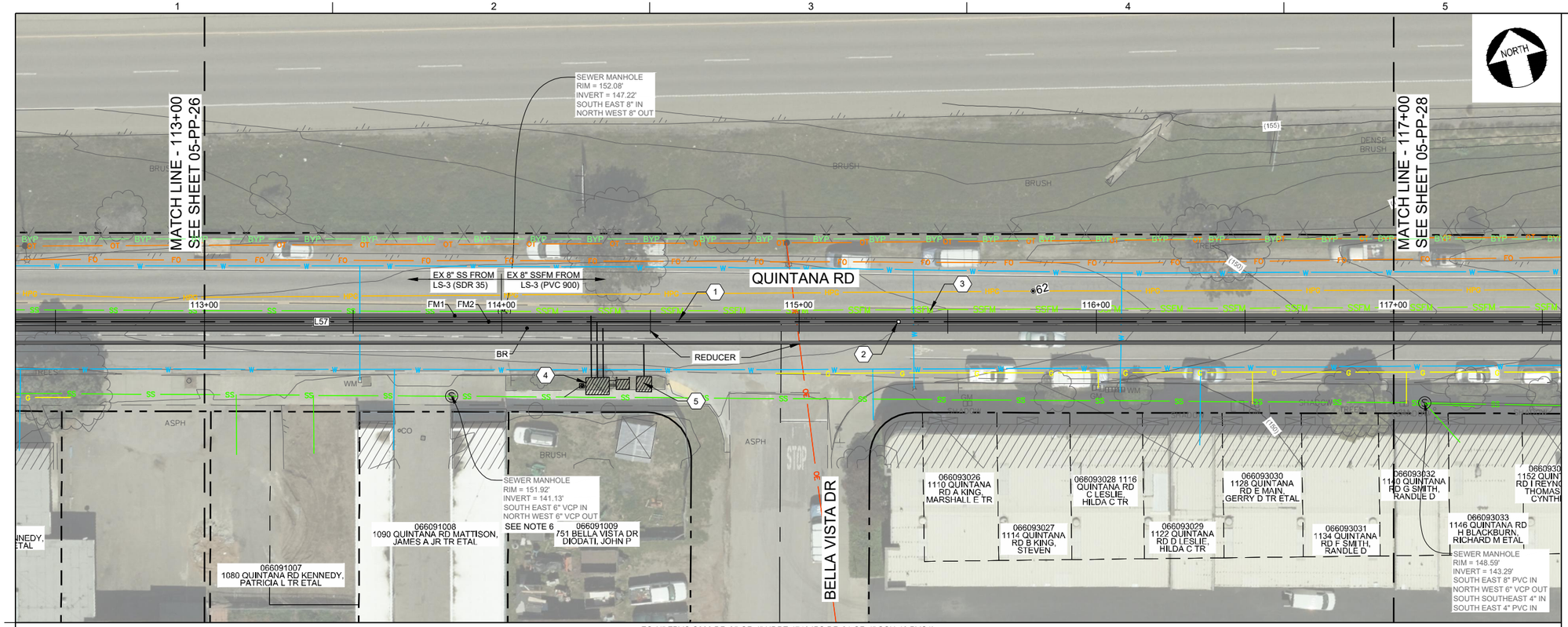

FO (4" FPVC C900 DR-25 OR 4" HDPE 4710 IPS DR-21 OR 4" SCH-40 PVC1)
FM1 (12" FPVC C900 DR-25 OR 16" HDPE 4710 IPS DR-11)
FM2 (16" FPVC C900 DR-25 OR 20" HDPE 4710 IPS DR-11)
BR (18" FPVC C900 DR-25 OR 20" HDPE 4710 IPS DR-17)
BR (20" FPVC C900 DR-25 OR 24" HDPE 4710 IPS DR-11)
IPR (8" FPVC C900 DR-25 OR 10" HDPE 4710 IPS DR-17)
IPR (10" FPVC C900 DR-25 OR 12" HDPE 4710 IPS DR-11)

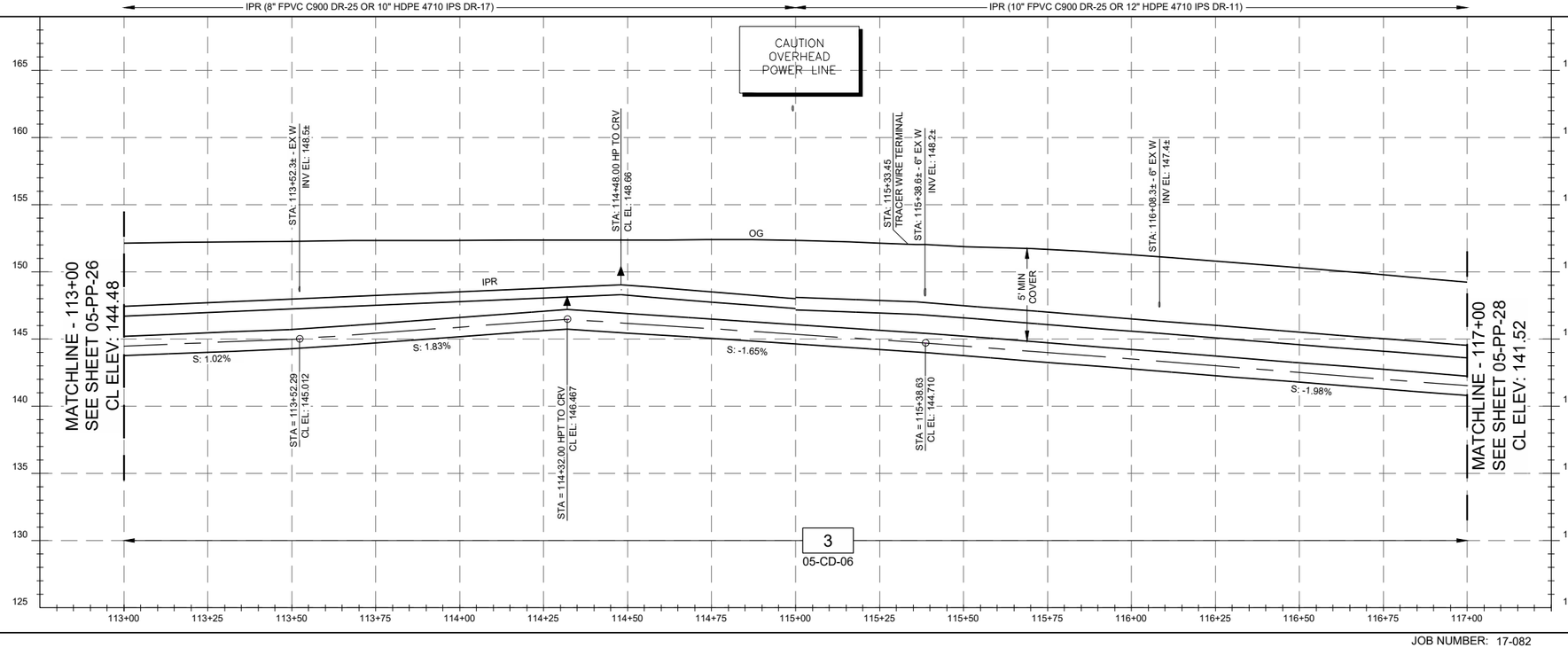

NOTES:

1. THE CONTRACTOR SHALL COMPLY WITH THE GENERAL CIVIL NOTES AND PERMITTING GENERAL NOTES.
2. HORIZONTAL ALIGNMENT AND PROFILE VERTICAL CURVES HEREIN ARE DESIGNED WITH THE MIN BENDING RADIUS OF THE LARGEST PIPELINE ASSUMING FPVC IS SELECTED. SMALLER BEND RADII MAY BE FEASIBLE DEPENDING ON THE PIPELINE MATERIAL AND LOCATION. THE CONTRACTOR MAY SUBMIT FOR APPROVAL MINOR HORIZONTAL ALIGNMENT CHANGES AND PROFILE VERTICAL CHANGES SO AS IT REDUCES FIELD CONFLICTS, REDUCES FITTINGS WHERE POSSIBLE, IS NOT ZERO SLOPED, AND DOES NOT RESULT IN A HIGH-SPOT.
3. PER SO CAL GAS REQUIREMENTS, ANY EXCAVATION WITHIN 10-FT OF A SO CAL GAS HIGH PRESSURE NATURAL GAS PIPELINE MUST BE COORDINATED THROUGH UNDERGROUND SERVICES ALERT (811) WITH A SO CAL GAS CO. STANDBY EMPLOYEE. IN ADDITION, ANY EXCAVATION, SUBGRADE REMOVAL, OR COMPACTION PERFORMED WITH 2' OF THE EDGE OF A SO CAL GAS PIPELINE BUT BE DONE UTILIZING HAND OPERATED TOOLS. ALL HIGH-PRESSURE GAS LINE EXCAVATIONS MUST HAVE A SOCAL GAS EMPLOYEE ON SITE.
4. GEOTECHNICAL BOREHOLES IN QUINTANA FROM EARTH SYSTEMS PACIFIC 2008 NOT DEPICTED.
5. QUINTANA RD FROM APPROXIMATELY STA 115+00 TO 150+50 INCLUDES OLD PORTLAND CEMENT CONCRETE OVERLAIN BY AC PAVEMENT. THE HORIZONTAL LIMITS OF PCC ARE UNKNOWN, BUT WERE REMOVED WITHIN THE 2008 LS-3 SSFM PROJECT EXCAVATION AND MAY HAVE BEEN REMOVED OVER SO CAL GAS FACILITIES.
6. LS-3 PASSIVE BYP DISCHARGE INTO EXISTING 6"SS ALONG SOUTH SIDE OF QUINTANA ONLY PERMITTED BETWEEN MAY 1 AND SEPTEMBER 31 AND REQUIRES OWNER APPROVAL.

CONSTRUCTION KEY NOTES:

1. INSTALL WRF OFFSITE PIPELINES, VALVES, AND APPURTENANCES PER HORIZONTAL PLAN AND VERTICAL PROFILE. ALIGNMENT IS CL OF FM2 UNLESS OTHERWISE NOTED. ORDER, PLACEMENT, AND REQUIRED CLEARANCES SHALL BE DETERMINED PER SPECIFIED TRENCH DETAIL UNDER PROFILE. SIZE & CLASS OF CARRIER AND/OR CASING PIPE MATERIALS ARE LISTED SCHEMATICALLY ABOVE PROFILE.
2. INSTALL TRACER WIRE TERMINAL (2060) LOCATE ON CL FM2.
3. 8"SS FROM LS-3 TO BE ABANDONED AND FILLED WITH TYPE 2 LCC OR DEMOLISHED AS NEEDED IN CONJUNCTION WITH APPROVED LS-3 BYPASS PLAN. ABANDONED MANHOLES TO BE FILLED WITH TYPE 2 LCC AND CONE, GRADE RINGS, AND COVER REMOVED.
4. CARV VAULT AND ODOR CONTROL PER DWG 06-CD-04.
5. IPR CARV VAULT PER DET 2/06-CD-05.
6. 8" LS-3 PASSIVE BYPASS LINE POTENTIAL ALIGNMENT ROUTE PER APPROVED BYPASS PLAN. LOCATE PIPE AS FAR FROM VEHICULAR TRAFFIC AS FEASIBLE WHILE WITHIN CITY R/W. PROTECT PIPE FROM VEHICULAR TRAFFIC. SEE SPEC 01550.

POTHOLING RESULTS:

EXISTING POTHOLING LOCATIONS AND RESULTS ARE APPROXIMATE, NOT SURVEYED, AND DO NOT PRECLUDE THE CONTRACTOR'S SOLE RESPONSIBILITY TO COMPLY WITH UTILITY VERIFICATION REQUIREMENTS.

(62) 7" A.C. PVMNT, 51" CVR, 16"HPG

20 0 20 40 FEET
HORIZ SCALE 1"=20'
5 0 5 10 FEET
VERT SCALE 1"=5'

REGISTERED PROFESSIONAL ENGINEER
MICHAEL P. FISHER
No. C61194
CIVIL
STATE OF CALIFORNIA
05/29/2020

DESIGN	P WEBSTER
DRAWN	P WEBSTER
CHECKED	T LEWIS
APPROVED	M FISHER

WATERWORKS ENGINEERS
2260 Douglas Blvd., Suite 105 • Roseville, CA 95661 • 916-780-9888

CITY OF MORRO BAY
WATER RECLAMATION FACILITY
LIFT STATION AND OFFSITE PIPELINES

PLAN AND PROFILE
FORCE MAIN PLAN AND PROFILE
STA 113+00 TO STA 117+00

DATE	MAY 2020
PROJECT NUMBER	17-082
DRAWING NUMBER	05-PP-27
SHEET NUMBER	50

CONFORMED SET - DEC 2020

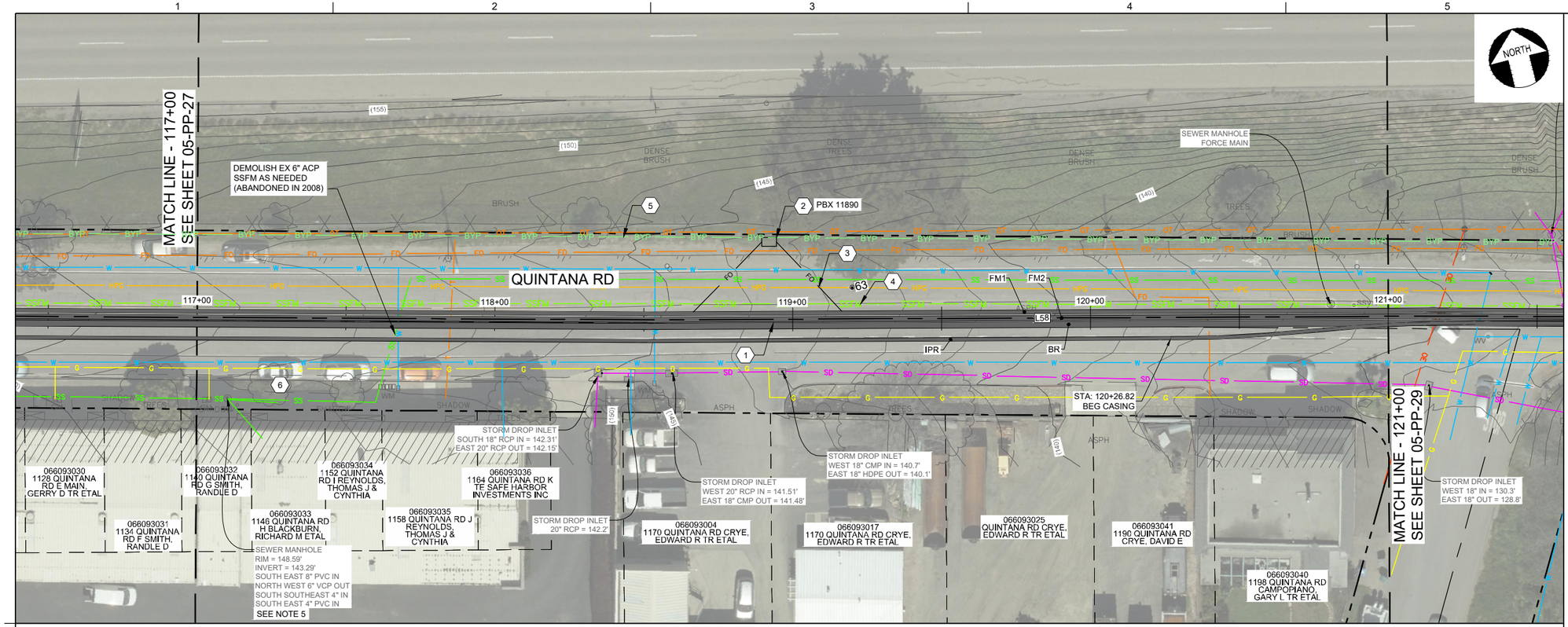

FO (4" FPVC C900 DR-25 OR 4" HDPE 4710 IPS DR-21 OR 4" SCH-40 PVC1)
FM1 (12" FPVC C900 DR-25 OR 16" HDPE 4710 IPS DR-11)
FM2 (16" FPVC C900 DR-25 OR 20" HDPE 4710 IPS DR-11)
BR (20" FPVC C900 DR-25 OR 24" HDPE 4710 IPS DR-11)
IPR (10" FPVC C900 DR-25 OR 12" HDPE 4710 IPS DR-11)

IPR (10" FPVC C900 DR-25 OR 12" HDPE 4710 DR-11) IN CASING PER DET 1/05-CD-15

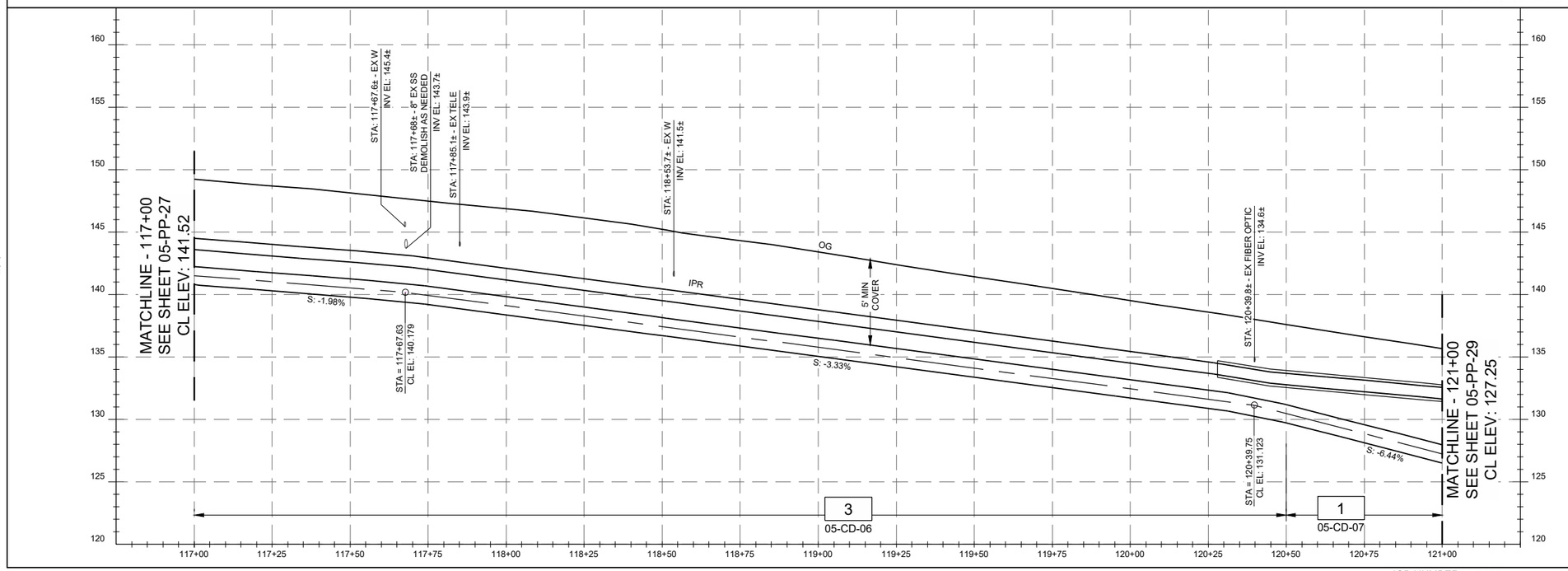

NOTES:

1. THE CONTRACTOR SHALL COMPLY WITH THE GENERAL CIVIL NOTES AND PERMITTING GENERAL NOTES.
2. HORIZONTAL ALIGNMENT AND PROFILE VERTICAL CURVES HEREIN ARE DESIGNED WITH THE MIN BENDING RADIUS OF THE LARGEST PIPELINE ASSUMING FPVC IS SELECTED. SMALLER BEND RADII MAY BE FEASIBLE DEPENDING ON THE PIPELINE MATERIAL AND LOCATION. THE CONTRACTOR MAY SUBMIT FOR APPROVAL MINOR HORIZONTAL ALIGNMENT CHANGES AND PROFILE VERTICAL CHANGES SO AS IT REDUCES FIELD CONFLICTS, REDUCES FITTINGS WHERE POSSIBLE, IS NOT ZERO SLOPED, AND DOES NOT RESULT IN A HIGH-SPOT.
3. PER SO CAL GAS REQUIREMENTS, ANY EXCAVATION WITHIN 10-FT OF A SO CAL GAS HIGH PRESSURE NATURAL GAS PIPELINE MUST BE COORDINATED THROUGH UNDERGROUND SERVICES ALERT (811) WITH A SO CAL GAS CO. STANDBY EMPLOYEE. IN ADDITION, ANY EXCAVATION, SUBGRADE REMOVAL, OR COMPACTION PERFORMED WITH 2' OF THE EDGE OF A SO CAL GAS PIPELINE BUT BE DONE UTILIZING HAND OPERATED TOOLS. ALL HIGH-PRESSURE GAS LINE EXCAVATIONS MUST HAVE A SOCAL GAS EMPLOYEE ON SITE.
4. GEOTECHNICAL BOREHOLES IN QUINTANA FROM EARTH SYSTEMS PACIFIC 2008 NOT DEPICTED.
5. QUINTANA RD FROM APPROXIMATELY STA 115+00 TO 150+50 INCLUDES OLD PORTLAND CEMENT CONCRETE OVERLAIN BY AC PAVEMENT. THE HORIZONTAL LIMITS OF PCC ARE UNKNOWN, BUT WERE REMOVED WITHIN THE 2008 LS-3 SSFM PROJECT EXCAVATION AND MAY HAVE BEEN REMOVED OVER SO CAL GAS FACILITIES.
6. LS-3 PASSIVE BYP DISCHARGE INTO EXISTING 6"SS ALONG SOUTH SIDE OF QUINTANA ONLY PERMITTED BETWEEN MAY 1 AND SEPTEMBER 31 AND REQUIRES OWNER APPROVAL.

CONSTRUCTION KEY NOTES:

1. INSTALL WRF OFFSITE PIPELINES, VALVES, AND APPURTENANCES PER HORIZONTAL PLAN AND VERTICAL PROFILE. ALIGNMENT IS CL OF FM2 UNLESS OTHERWISE NOTED. ORDER, PLACEMENT, AND REQUIRED CLEARANCES SHALL BE DETERMINED PER SPECIFIED TRENCH DETAIL UNDER PROFILE. SIZE & CLASS OF CARRIER AND/OR CASING PIPE MATERIALS ARE LISTED SCHEMATICALLY ABOVE PROFILE.
2. INSTALL FIBER PULLBOX PER DWG 00-E-04/VLT SIZE S534.
3. WHERE FO DIVERGES FROM MAIN ALIGNMENT INSTALL PER DET 1/05-CD-09.
4. 8"SS FROM LS-3 TO BE ABANDONED AND FILLED WITH TYPE 2 LCC OR DEMOLISHED AS NEEDED IN CONJUNCTION WITH APPROVED LS-3 BYPASS PLAN. ABANDONED MANHOLES TO BE FILLED WITH TYPE 2 LCC AND CONE, GRADE RINGS, AND COVER REMOVED.
5. 8" LS-3 PASSIVE BYPASS LINE POTENTIAL ALIGNMENT ROUTE PER APPROVED BYPASS PLAN. LOCATE PIPE AS FAR FROM VEHICULAR TRAFFIC AS FEASIBLE WHILE WITHIN CITY R/W. PROTECT PIPE FROM VEHICULAR TRAFFIC. SEE SPEC 01550.

POTHOLING RESULTS:

EXISTING POTHOLING LOCATIONS AND RESULTS ARE APPROXIMATE, NOT SURVEYED, AND DO NOT PRECLUDE THE CONTRACTOR'S SOLE RESPONSIBILITY TO COMPLY WITH UTILITY VERIFICATION REQUIREMENTS.

63 11" A.C. PVMNT, 48" CVR, 16"HPG

20 0 20 40 FEET
HORIZ SCALE 1"=20'
5 0 5 10 FEET
VERT SCALE 1"=5'

REGISTERED PROFESSIONAL ENGINEER MICHAEL P. WEBSTER No. C67194 CIVIL STATE OF CALIFORNIA
05/29/2020

DESIGN P WEBSTER
DRAWN P WEBSTER
CHECKED T LEWIS
APPROVED M FISHER

WATERWORKS ENGINEERS
2260 Douglas Blvd., Suite 105 • Roseville, CA 95661 • 916-780-9888

CITY OF MORRO BAY
WATER RECLAMATION FACILITY LIFT STATION AND OFFSITE PIPELINES

PLAN AND PROFILE
FORCE MAIN PLAN AND PROFILE STA 117+00 TO STA 121+00

DATE MAY 2020
PROJECT NUMBER 17-082
DRAWING NUMBER 05-PP-28
SHEET NUMBER 51

L:\CAD\PROJECTS\17-082 MORRO BAY PS AND PIPELINE_(S)\PROJECT FILES\DELIVERABLES\1782D-05PP128.DWG

JOB NUMBER: 17-082 FILENAME: 1782D-05PP128.DWG PLOT DATE: 05/23/20 PLOT TIME: 14:45:48

CONFORMED SET - DEC 2020

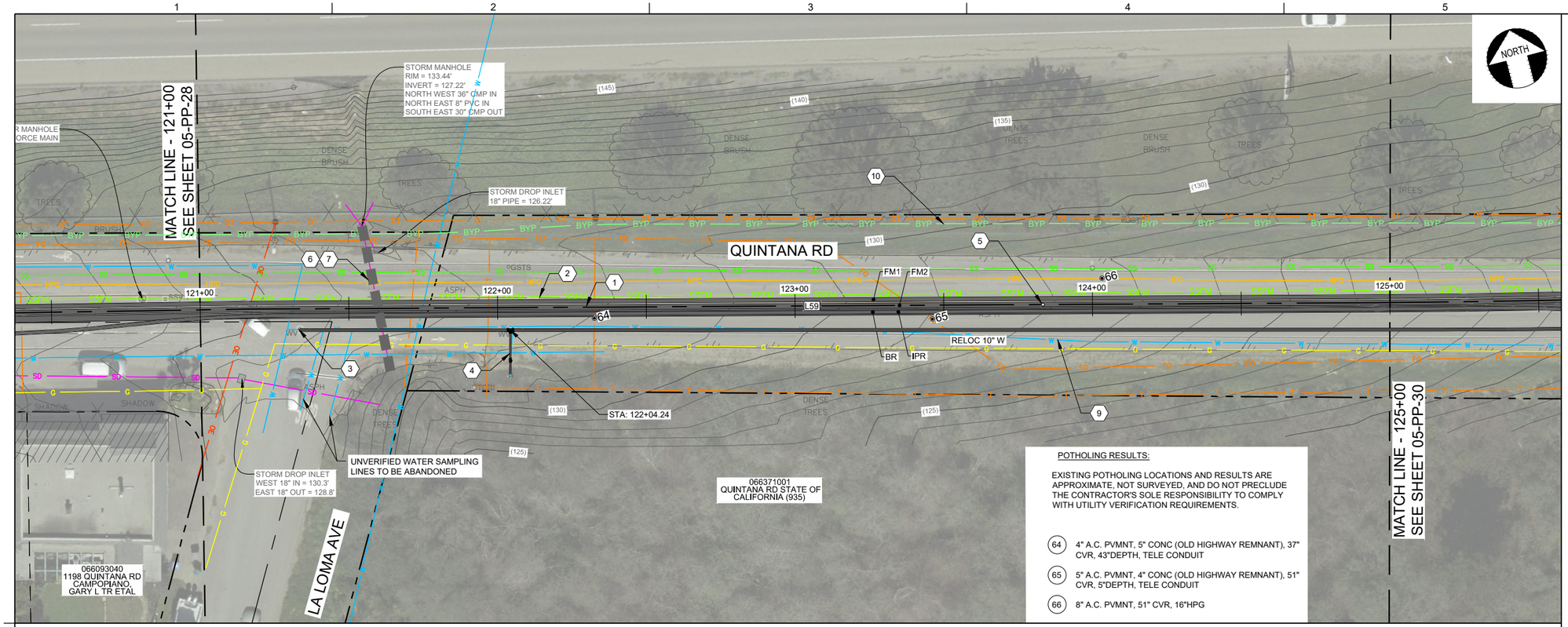

FO (4" FPVC C900 DR-25 OR 4" HDPE 4710 IPS DR-21 OR 4" SCH-40 PVC1)
FM1 (12" FPVC C900 DR-25 OR 16" HDPE 4710 IPS DR-11)
FM2 (16" FPVC C900 DR-25 OR 20" HDPE 4710 IPS DR-11)
BR (20" FPVC C900 DR-25 OR 24" HDPE 4710 IPS DR-11)
IPR (10" FPVC C900 DR-25 OR 12" HDPE 4710 DR-11) IN CASING PER DET 1/05-CD-15
RELOC 10"W (10" FPVC C900 DR-18)

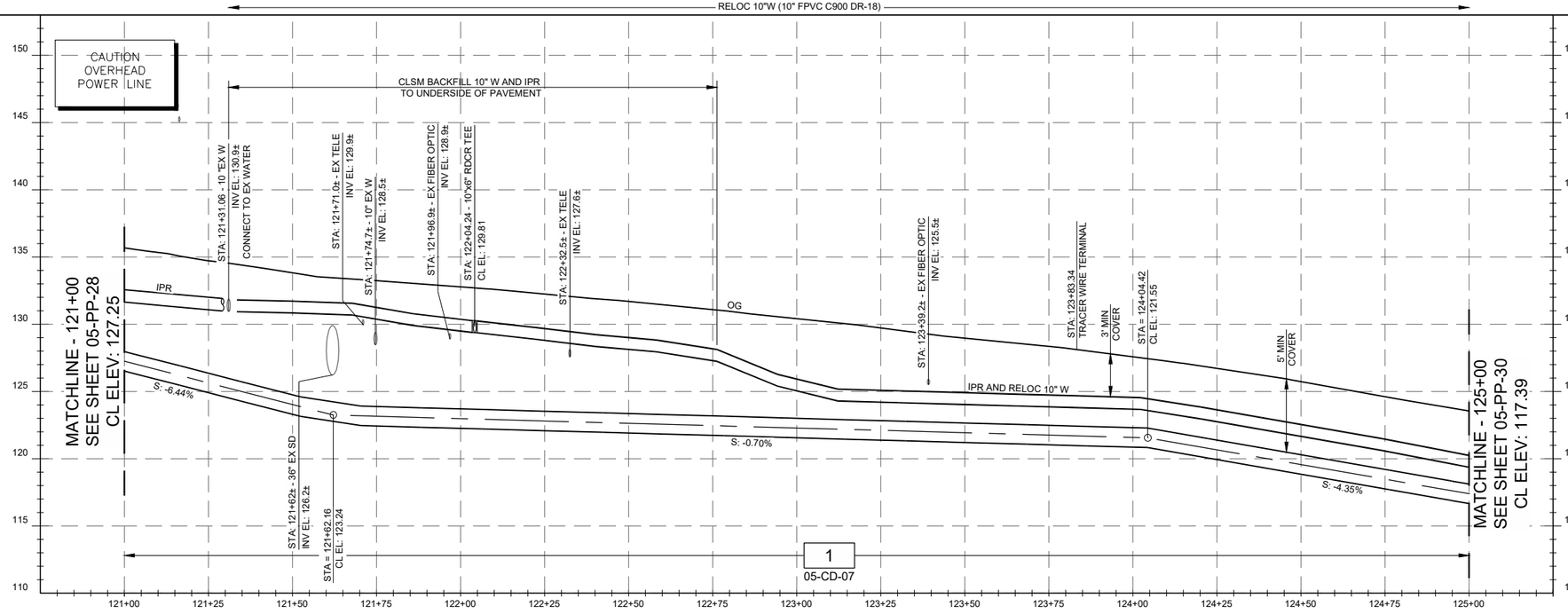

POTHOLING RESULTS:

EXISTING POTHOLING LOCATIONS AND RESULTS ARE APPROXIMATE, NOT SURVEYED, AND DO NOT PRECLUDE THE CONTRACTOR'S SOLE RESPONSIBILITY TO COMPLY WITH UTILITY VERIFICATION REQUIREMENTS.

(64) 4" A.C. PVMNT, 5" CONC (OLD HIGHWAY REMNANT), 37" CVR, 43"DEPTH, TELE CONDUIT

(65) 5" A.C. PVMNT, 4" CONC (OLD HIGHWAY REMNANT), 51" CVR, 5"DEPTH, TELE CONDUIT

(66) 8" A.C. PVMNT, 51" CVR, 16"HPG

NOTES:

1. THE CONTRACTOR SHALL COMPLY WITH THE GENERAL CIVIL NOTES AND PERMITTING GENERAL NOTES.
2. HORIZONTAL ALIGNMENT AND PROFILE VERTICAL CURVES HEREIN ARE DESIGNED WITH THE MIN BENDING RADIUS OF THE LARGEST PIPELINE ASSUMING FPVC IS SELECTED. SMALLER BEND RADII MAY BE FEASIBLE DEPENDING ON THE PIPELINE MATERIAL AND LOCATION. THE CONTRACTOR MAY SUBMIT FOR APPROVAL MINOR HORIZONTAL ALIGNMENT CHANGES AND PROFILE VERTICAL CHANGES SO AS IT REDUCES FIELD CONFLICTS, REDUCES FITTINGS WHERE POSSIBLE, IS NOT ZERO SLOPED, AND DOES NOT RESULT IN A HIGH-SPOT.
3. PER SO CAL GAS REQUIREMENTS, ANY EXCAVATION WITHIN 10-FT OF A SO CAL GAS HIGH PRESSURE NATURAL GAS PIPELINE MUST BE COORDINATED THROUGH UNDERGROUND SERVICES ALERT (811) WITH A SO CAL GAS CO. STANDBY EMPLOYEE. IN ADDITION, ANY EXCAVATION, SUBGRADE REMOVAL, OR COMPACTION PERFORMED WITH 2' OF THE EDGE OF A SO CAL GAS PIPELINE BUT BE DONE UTILIZING HAND OPERATED TOOLS. ALL HIGH-PRESSURE GAS LINE EXCAVATIONS MUST HAVE A SOCAL GAS EMPLOYEE ON SITE.
4. GEOTECHNICAL BOREHOLES IN QUINTANA FROM EARTH SYSTEMS PACIFIC 2008 NOT DEPICTED. CONTRACTOR SHALL NOTE THE PRESENCE OF FRANCISCAN MELANGE FROM AT 2'-5' BGS IN BH#6.
5. QUINTANA RD FROM APPROXIMATELY STA 115+00 TO 150+50 INCLUDES OLD PORTLAND CEMENT CONCRETE OVERLAIN BY AC PAVEMENT. CONTRACTOR SHALL ASSUME 8" DEPTH OF PCC ACROSS WIDTH OF QUINTANA RD. CONTRACTOR SHALL ASSUME A 30" WIDE SECTION OF PCC ROADWAY WAS REMOVED AS PART OF PREVIOUS 2008 LS-3 8"SSFM/8"SS ALONG THE EXISTING 8"SS ALIGNMENT DEPICTED ON THE PLANS.

CONSTRUCTION KEY NOTES:

(1.) INSTALL WRF OFFSITE PIPELINES, VALVES, AND APPURTENANCES PER HORIZONTAL PLAN AND VERTICAL PROFILE. ALIGNMENT IS CL OF FM2 UNLESS OTHERWISE NOTED. ORDER, PLACEMENT, AND REQUIRED CLEARANCES SHALL BE DETERMINED PER SPECIFIED TRENCH DETAIL UNDER PROFILE. SIZE & CLASS OF CARRIER AND/OR CASING PIPE MATERIALS ARE LISTED SCHEMATICALLY ABOVE PROFILE.

(2.) 8"SS FROM LS-3 TO BE ABANDONED AND FILLED WITH TYPE 2 LCC OR DEMOLISHED AS NEEDED IN CONJUNCTION WITH APPROVED LS-3 BYPASS PLAN. ABANDONED MANHOLES TO BE FILLED WITH TYPE 2 LCC AND CONE, GRADE RINGS, AND COVER REMOVED.

(3.) INSTALL THRUST BLOCK ON EAST SIDE OF EX GATE VALVE. CONNECT EX 6"PVC TO RELOC 10"W WITH 6"x10" MJ RDCR.

(4.) INSTALL 10"x6" MJ RDCNG TEE. REPLACE HYDRANT CONNECTION PIPING AND 6" V-5-101 UP TO EX HYDRANT PER (2200) USING (2203) VALVE BOX. REUSE EX HYDRANT AS DIRECTED BY CITY ENGINEER.

(5.) INSTALL TRACER WIRE TERMINAL (2060) LOCATE ON CL FM2.

(6.) AS DIRECTED BY CITY ENGINEER, REMOVE 45-LF EX CMP STORM DRAIN AND INSTALL EQUIVALENT SIZE CORRUGATED HDPE PIPE FROM EX NORTH DRAIN INLET TO SOUTHERN EDGE OF PAVEMENT. GROUT NEW HDPE IN EX DRAIN STRUCTURE TO REMAIN. USE APPROPRIATE REPAIR COUPLING AND/OR CONCRETE COLLAR (3323) AND CONNECT TO EDGE OF PIPE THAT DISCHARGES SOUTH INTO ENVIRONMENTALLY SENSITIVE AREA.

(7.) HIGH PRIORITY UTILITY VERIFICATION REQUIRED, TYP OF 2.

(8.) HPG CROSSING. CONTRACTOR TO SUBMIT PIPE SUPPORT PLAN TO CONSTRUCTION MANAGER AND SOCAL GAS.

(9.) 6" ACP W TO BE ABANDONED AND FILLED WITH TYPE 2 LCC OR DEMOLISH AS NEEDED IN CONJUNCTION WITH APPROVED BYPASS PLAN.

(10) 8" LS-3 PASSIVE BYPASS LINE POTENTIAL ALIGNMENT ROUTE PER APPROVED BYPASS PLAN. LOCATE PIPE AS FAR FROM VEHICULAR TRAFFIC AS FEASIBLE WHILE WITHIN CITY R/W. PROTECT PIPE FROM VEHICULAR TRAFFIC. SEE SPEC 01550.

20 0 20 40 FEET
HORIZ SCALE 1"=20'

5 0 5 10 FEET
VERT SCALE 1"=5'

REGISTERED PROFESSIONAL ENGINEER
MICHAEL P. MCGUIRE
No. C 67194
CIVIL
STATE OF CALIFORNIA
05/29/2020

DESIGN	P WEBSTER
DRAWN	P WEBSTER
CHECKED	T LEWIS
APPROVED	M FISHER

WATERWORKS ENGINEERS
2380 Douglas Blvd, Suite 100 • Roseville, CA 95661 • 916-780-2888

CITY OF MORRO BAY

WATER RECLAMATION FACILITY
LIFT STATION AND OFFSITE PIPELINES

PLAN AND PROFILE

FORCE MAIN PLAN AND PROFILE
STA 121+00 TO STA 125+00

DATE	MAY 2020
PROJECT NUMBER	17-082
DRAWING NUMBER	05-PP-29
SHEET NUMBER	52

L:\CAD\PROJECTS\17-082 MORRO BAY PS AND PIPELINE_(S)\PROJECT FILES\DELIVERABLES\1782D-05PP129.DWG

CONFORMED SET - DEC 2020

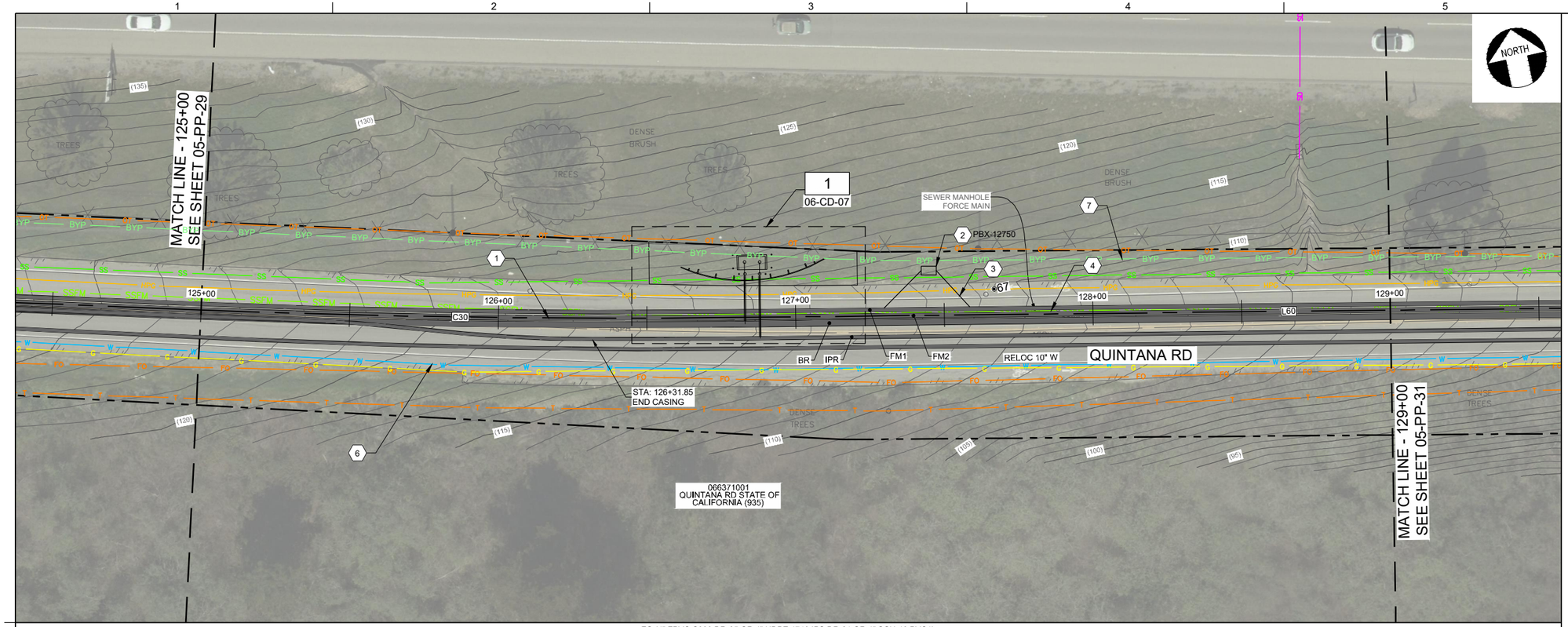

FO (4" FPVC C900 DR-25 OR 4" HDPE 4710 IPS DR-21 OR 4" SCH-40 PVC1)
FM1 (12" FPVC C900 DR-25 OR 16" HDPE 4710 IPS DR-11)
FM2 (16" FPVC C900 DR-25 OR 20" HDPE 4710 IPS DR-11)
BR (20" FPVC C900 DR-25 OR 24" HDPE 4710 IPS DR-11)
IPR (10" FPVC C900 DR-25 OR 12" HDPE 4710 DR-11) IN CASING PER DET 1/05-CD-15
IPR (10" FPVC C900 DR-25 OR 12" HDPE 4710 IPS DR-11)
RELOC 10"W (10" FPVC C900 DR-18)

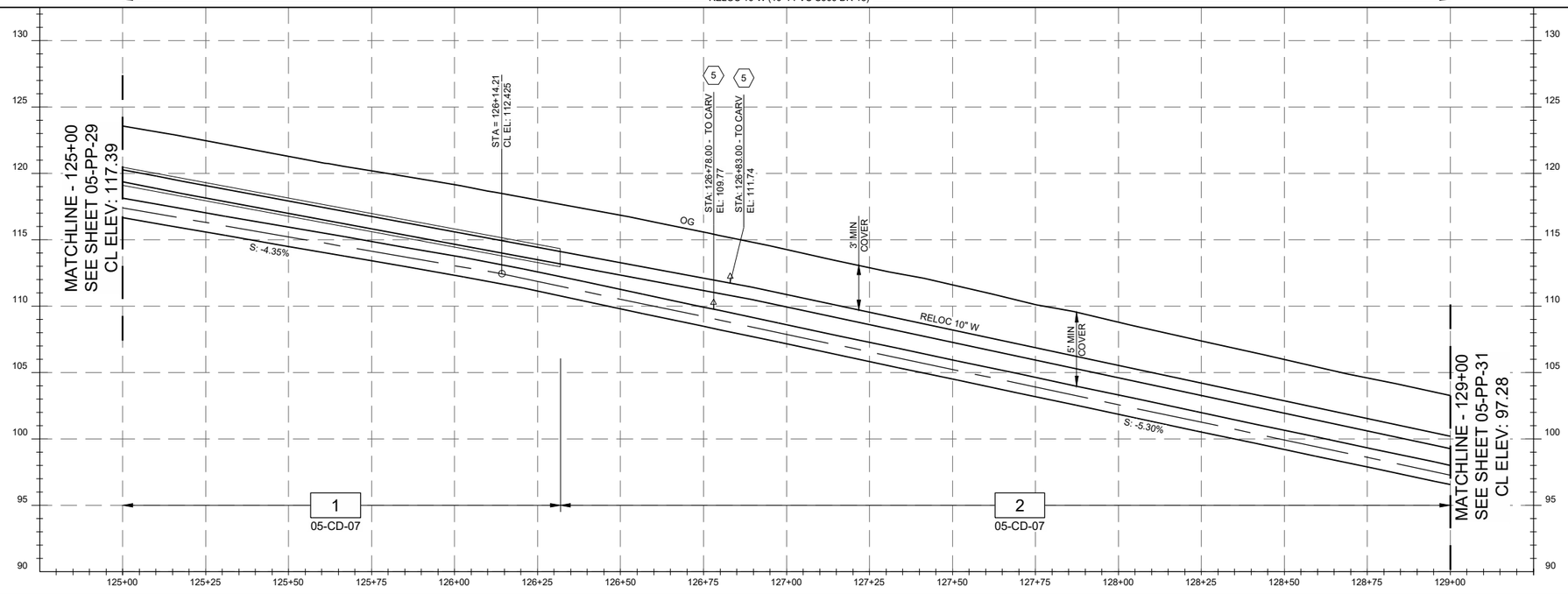

NOTES:

1. THE CONTRACTOR SHALL COMPLY WITH THE GENERAL CIVIL NOTES AND PERMITTING GENERAL NOTES.
2. HORIZONTAL ALIGNMENT AND PROFILE VERTICAL CURVES HEREIN ARE DESIGNED WITH THE MIN BENDING RADIUS OF THE LARGEST PIPELINE ASSUMING FPVC IS SELECTED. SMALLER BEND RADII MAY BE FEASIBLE DEPENDING ON THE PIPELINE MATERIAL AND LOCATION. THE CONTRACTOR MAY SUBMIT FOR APPROVAL MINOR HORIZONTAL ALIGNMENT CHANGES AND PROFILE VERTICAL CHANGES SO AS IT REDUCES FIELD CONFLICTS, REDUCES FITTINGS WHERE POSSIBLE, IS NOT ZERO SLOPED, AND DOES NOT RESULT IN A HIGH-SPOT.
3. PER SO CAL GAS REQUIREMENTS, ANY EXCAVATION WITHIN 10-FT OF A SO CAL GAS HIGH PRESSURE NATURAL GAS PIPELINE MUST BE COORDINATED THROUGH UNDERGROUND SERVICES ALERT (811) WITH A SO CAL GAS CO. STANDBY EMPLOYEE. IN ADDITION, ANY EXCAVATION, SUBGRADE REMOVAL, OR COMPACTION PERFORMED WITH 2' OF THE EDGE OF A SO CAL GAS PIPELINE BUT BE DONE UTILIZING HAND OPERATED TOOLS. ALL HIGH-PRESSURE GAS LINE EXCAVATIONS MUST HAVE A SOCAL GAS EMPLOYEE ON SITE.
4. GEOTECHNICAL BOREHOLES IN QUINTANA FROM EARTH SYSTEMS PACIFIC 2008 NOT DEPICTED.
5. QUINTANA RD FROM APPROXIMATELY STA 115+00 TO 150+50 INCLUDES OLD PORTLAND CEMENT CONCRETE OVERLAIN BY AC PAVEMENT. CONTRACTOR SHALL ASSUME 8" DEPTH OF PCC ACROSS WIDTH OF QUINTANA RD. CONTRACTOR SHALL ASSUME A 30" WIDE SECTION OF PCC ROADWAY WAS REMOVED AS PART OF PREVIOUS 2008 LS-3 8"SSFM/8"SS ALONG THE EXISTING 8"SS ALIGNMENT DEPICTED ON THE PLANS.

CONSTRUCTION KEY NOTES:

1. INSTALL WRF OFFSITE PIPELINES, VALVES, AND APPURTENANCES PER HORIZONTAL PLAN AND VERTICAL PROFILE. ALIGNMENT IS CL OF FM2 UNLESS OTHERWISE NOTED. ORDER, PLACEMENT, AND REQUIRED CLEARANCES SHALL BE DETERMINED PER SPECIFIED TRENCH DETAIL UNDER PROFILE. SIZE & CLASS OF CARRIER AND/OR CASING PIPE MATERIALS ARE LISTED SCHEMATICALLY ABOVE PROFILE.
2. INSTALL FIBER PULLBOX PER DWG 00-E-04/VLT SIZE S534.
3. WHERE FO DIVERGES FROM MAIN ALIGNMENT INSTALL PER DET 1/05-CD-09.
4. 8" SS FROM LS-3 TO BE ABANDONED AND FILLED WITH TYPE 2 LCC OR DEMOLISHED AS NEEDED IN CONJUNCTION WITH APPROVED LS-3 BYPASS PLAN. ABANDONED MANHOLES TO BE FILLED WITH TYPE 2 LCC AND CONE, GRADE RINGS, AND COVER REMOVED.
5. HPG CROSSING. CONTRACTOR TO SUBMIT PIPE SUPPORT PLAN TO CONSTRUCTION MANAGER AND SOCAL GAS.
6. 6" ACP W TO BE ABANDONED AND FILLED WITH TYPE 2 LCC OR DEMOLISH AS NEEDED IN CONJUNCTION WITH APPROVED BYPASS PLAN.
7. 8" LS-3 PASSIVE BYPASS LINE POTENTIAL ALIGNMENT ROUTE PER APPROVED BYPASS PLAN. LOCATE PIPE AS FAR FROM VEHICULAR TRAFFIC AS FEASIBLE WHILE WITHIN CITY R/W. PROTECT PIPE FROM VEHICULAR TRAFFIC. SEE SPEC 01550.

POTHOLING RESULTS:

EXISTING POTHOLING LOCATIONS AND RESULTS ARE APPROXIMATE, NOT SURVEYED, AND DO NOT PRECLUDE THE CONTRACTOR'S SOLE RESPONSIBILITY TO COMPLY WITH UTILITY VERIFICATION REQUIREMENTS.

(67) 4" A.C. PVMNT, 49" CVR, 16"HPG

20 0 20 40 FEET
HORIZ SCALE 1"=20'

5 0 5 10 FEET
VERT SCALE 1"=5'

REGISTERED PROFESSIONAL ENGINEER
MICHAEL P. PLAN
No. C67194
CIVIL
STATE OF CALIFORNIA
05/29/2020

DESIGN	P WEBSTER
DRAWN	P WEBSTER
CHECKED	T LEWIS
APPROVED	M FISHER

WATERWORKS ENGINEERS
2260 Douglas Blvd., Suite 105 • Roseville, CA 95661 • 916-780-9888

CITY OF MORRO BAY
WATER RECLAMATION FACILITY
LIFT STATION AND OFFSITE PIPELINES

PLAN AND PROFILE
FORCE MAIN PLAN AND PROFILE
STA 125+00 TO STA 129+00

DATE	MAY 2020
PROJECT NUMBER	17-082
DRAWING NUMBER	05-PP-30
SHEET NUMBER	53

CONFORMED SET - DEC 2020

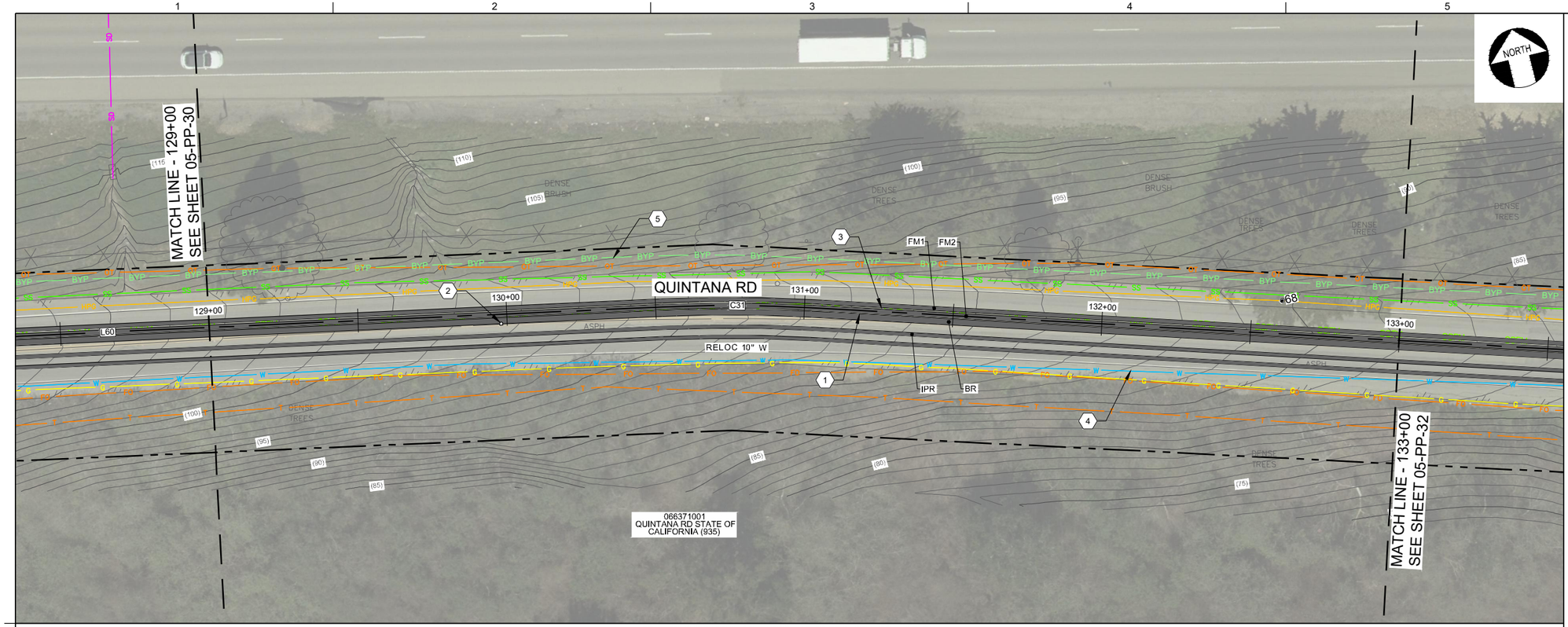

FO (4" FPVC C900 DR-25 OR 4" HDPE 4710 IPS DR-21 OR 4" SCH-40 PVC1)
FM1 (12" FPVC C900 DR-25 OR 16" HDPE 4710 IPS DR-11)
FM2 (16" FPVC C900 DR-25 OR 20" HDPE 4710 IPS DR-11)
BR (20" FPVC C900 DR-25 OR 24" HDPE 4710 IPS DR-11)
IPR (10" FPVC C900 DR-25 OR 12" HDPE 4710 IPS DR-11)
RELOC 10"W (10" FPVC C900 DR-18)

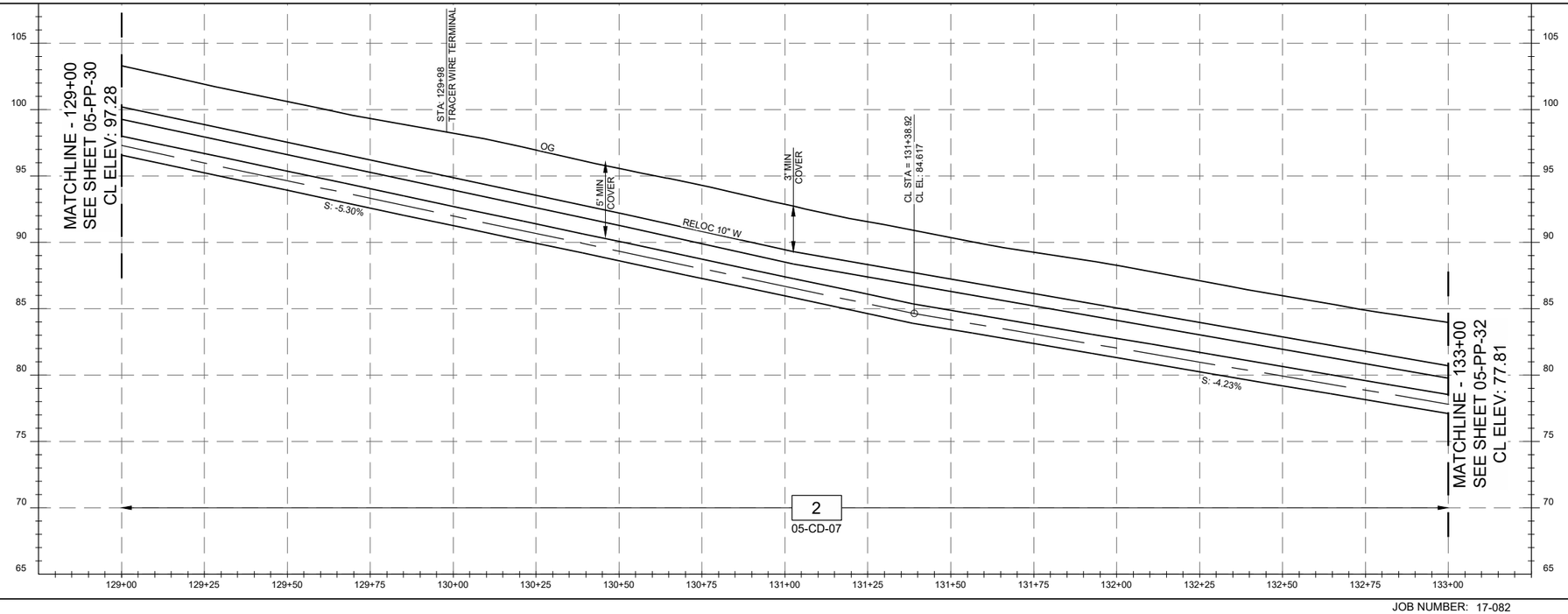

2
05-CD-07

NOTES:

1. THE CONTRACTOR SHALL COMPLY WITH THE GENERAL CIVIL NOTES AND PERMITTING GENERAL NOTES.
2. HORIZONTAL ALIGNMENT AND PROFILE VERTICAL CURVES HEREIN ARE DESIGNED WITH THE MIN BENDING RADIUS OF THE LARGEST PIPELINE ASSUMING FPVC IS SELECTED. SMALLER BEND RADII MAY BE FEASIBLE DEPENDING ON THE PIPELINE MATERIAL AND LOCATION. THE CONTRACTOR MAY SUBMIT FOR APPROVAL MINOR HORIZONTAL ALIGNMENT CHANGES AND PROFILE VERTICAL CHANGES SO AS IT REDUCES FIELD CONFLICTS, REDUCES FITTINGS WHERE POSSIBLE, IS NOT ZERO SLOPED, AND DOES NOT RESULT IN A HIGH-SPOT.
3. PER SO CAL GAS REQUIREMENTS, ANY EXCAVATION WITHIN 10-FT OF A SO CAL GAS HIGH PRESSURE NATURAL GAS PIPELINE MUST BE COORDINATED THROUGH UNDERGROUND SERVICES ALERT (811) WITH A SO CAL GAS CO. STANDBY EMPLOYEE. IN ADDITION, ANY EXCAVATION, SUBGRADE REMOVAL, OR COMPACTION PERFORMED WITH 2' OF THE EDGE OF A SO CAL GAS PIPELINE BUT BE DONE UTILIZING HAND OPERATED TOOLS. ALL HIGH-PRESSURE GAS LINE EXCAVATIONS MUST HAVE A SOCAL GAS EMPLOYEE ON SITE.
4. GEOTECHNICAL BOREHOLES IN QUINTANA FROM EARTH SYSTEMS PACIFIC 2008 NOT DEPICTED.
5. QUINTANA RD FROM APPROXIMATELY STA 115+00 TO 150+50 INCLUDES OLD PORTLAND CEMENT CONCRETE OVERLAIN BY AC PAVEMENT. CONTRACTOR SHALL ASSUME 8" DEPTH OF PCC ACROSS WIDTH OF QUINTANA RD. CONTRACTOR SHALL ASSUME A 30" WIDE SECTION OF PCC ROADWAY WAS REMOVED AS PART OF PREVIOUS 2008 LS-3 8"SSFM/8"SS ALONG THE EXISTING 8"SS ALIGNMENT DEPICTED ON THE PLANS.

CONSTRUCTION KEY NOTES:

1. INSTALL WRF OFFSITE PIPELINES, VALVES, AND APPURTENANCES PER HORIZONTAL PLAN AND VERTICAL PROFILE. ALIGNMENT IS CL OF FM2 UNLESS OTHERWISE NOTED. ORDER, PLACEMENT, AND REQUIRED CLEARANCES SHALL BE DETERMINED PER SPECIFIED TRENCH DETAIL UNDER PROFILE. SIZE & CLASS OF CARRIER AND/OR CASING PIPE MATERIALS ARE LISTED SCHEMATICALLY ABOVE PROFILE.
2. INSTALL TRACER WIRE TERMINAL (2060) LOCATE OFF =3.0' FROM CL FM2.
3. 8" SS FROM LS-3 TO BE ABANDONED AND FILLED WITH TYPE 2 LCC OR DEMOLISHED AS NEEDED IN CONJUNCTION WITH APPROVED LS-3 BYPASS PLAN. ABANDONED MANHOLES TO BE FILLED WITH TYPE 2 LCC AND CONE, GRADE RINGS, AND COVER REMOVED.
4. 6" ACP W TO BE ABANDONED AND FILLED WITH TYPE 2 LCC OR DEMOLISH AS NEEDED IN CONJUNCTION WITH APPROVED BYPASS PLAN.
5. 8" LS-3 PASSIVE BYPASS LINE POTENTIAL ALIGNMENT ROUTE PER APPROVED BYPASS PLAN. LOCATE PIPE AS FAR FROM VEHICULAR TRAFFIC AS FEASIBLE WHILE WITHIN CITY R/W. PROTECT PIPE FROM VEHICULAR TRAFFIC. SEE SPEC 01550.

POTHOLING RESULTS:

EXISTING POTHOLING LOCATIONS AND RESULTS ARE APPROXIMATE, NOT SURVEYED, AND DO NOT PRECLUDE THE CONTRACTOR'S SOLE RESPONSIBILITY TO COMPLY WITH UTILITY VERIFICATION REQUIREMENTS.

(68) 4" A.C. PVMNT, 49" CVR, 16"HPG

20 0 20 40 FEET
HORIZ SCALE 1"=20'

5 0 5 10 FEET
VERT SCALE 1"=5'

REGISTERED PROFESSIONAL ENGINEER
MICHAEL P. FISHER
No. C61794
CIVIL
STATE OF CALIFORNIA
05/29/2020

DESIGN P WEBSTER
DRAWN P WEBSTER
CHECKED T LEWIS
APPROVED M FISHER

WATERWORKS ENGINEERS
2260 Douglas Blvd., Suite 105 • Roseville, CA 95661 • 916-780-9888

CITY OF MORRO BAY
WATER RECLAMATION FACILITY
LIFT STATION AND OFFSITE PIPELINES

PLAN AND PROFILE
FORCE MAIN PLAN AND PROFILE
STA 129+00 TO STA 133+00

DATE MAY 2020
PROJECT NUMBER 17-082
DRAWING NUMBER 05-PP-31
SHEET NUMBER 54

L:\CAD\PROJECTS\17-082 MORRO BAY PS AND PIPELINE_(S)\PROJECT FILES\DELIVERABLES\1782D-05PP131.DWG

JOB NUMBER: 17-082 FILENAME: 1782D-05PP131.DWG PLOT DATE: 05/23/20 PLOT TIME: 14:41:27

CONFORMED SET - DEC 2020

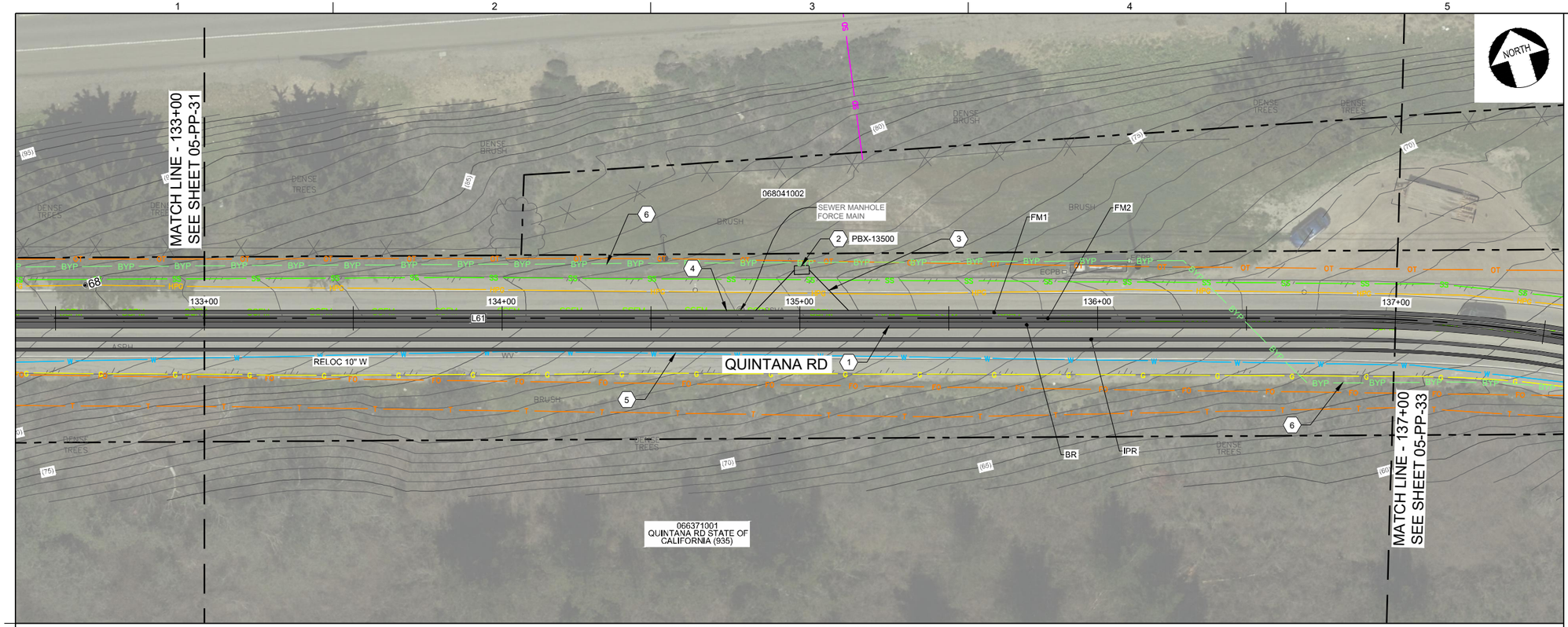

FO (4" FPVC C900 DR-25 OR 4" HDPE 4710 IPS DR-21 OR 4" SCH-40 PVC1)
FM1 (12" FPVC C900 DR-25 OR 16" HDPE 4710 IPS DR-11)
FM2 (16" FPVC C900 DR-25 OR 20" HDPE 4710 IPS DR-11)
BR (20" FPVC C900 DR-25 OR 24" HDPE 4710 IPS DR-11)
IPR (10" FPVC C900 DR-25 OR 12" HDPE 4710 IPS DR-11)
RELOC 10"W (10" FPVC C900 DR-18)

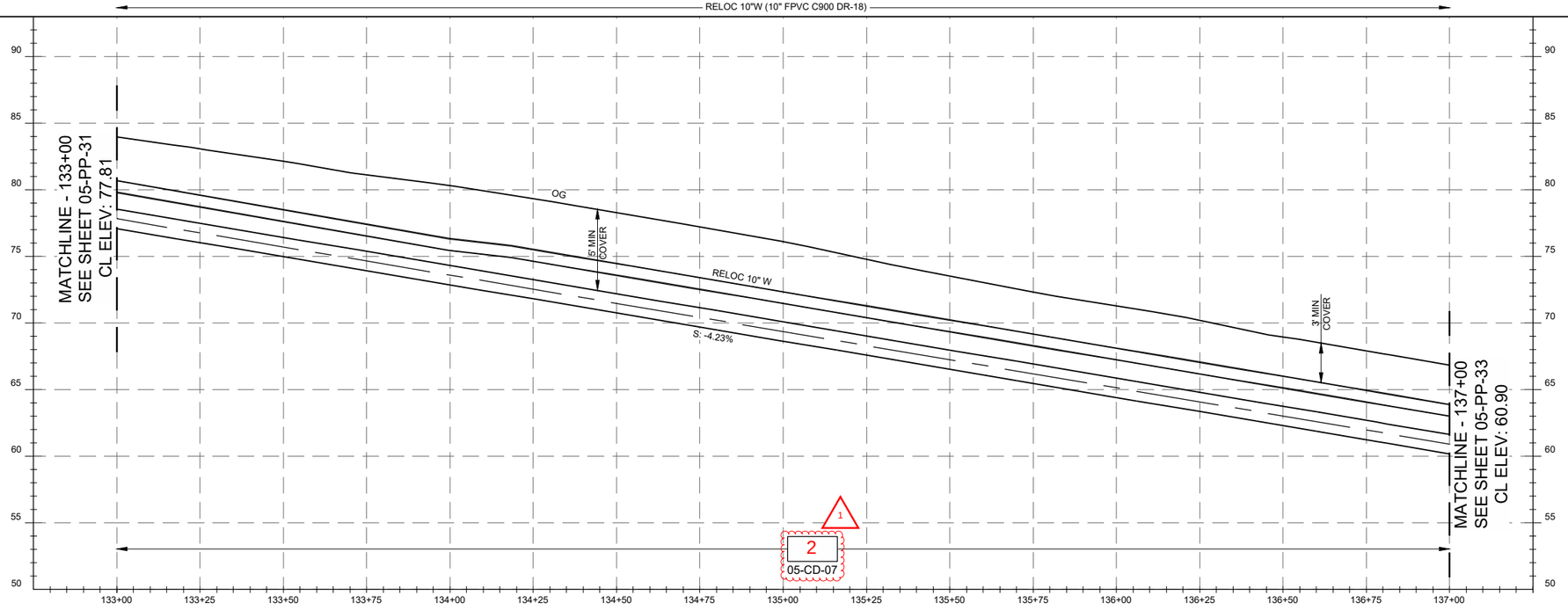

1
2
05-CD-07

NOTES:

1. THE CONTRACTOR SHALL COMPLY WITH THE GENERAL NOTES, CONSTRUCTION WORK PLANS, REGULATORY PERMITS, AND ENVIRONMENTAL MITIGATION MEASURES LISTED ON DWG G-16 & G-17.
2. HORIZONTAL ALIGNMENT AND PROFILE VERTICAL CURVES HEREIN ARE DESIGNED WITH THE MIN BENDING RADIUS OF THE LARGEST PIPELINE ASSUMING FPVC IS SELECTED. SMALLER BEND RADII MAY BE FEASIBLE DEPENDING ON THE PIPELINE MATERIAL AND LOCATION. THE CONTRACTOR MAY SUBMIT FOR APPROVAL MINOR HORIZONTAL ALIGNMENT CHANGES AND PROFILE VERTICAL CHANGES SO AS IT REDUCES FIELD CONFLICTS, REDUCES FITTINGS WHERE POSSIBLE, IS NOT ZERO SLOPED, AND DOES NOT RESULT IN A HIGH-SPOT.
3. PER SO CAL GAS REQUIREMENTS, ANY EXCAVATION WITHIN 10-FT OF A SO CAL GAS HIGH PRESSURE NATURAL GAS PIPELINE MUST BE COORDINATED THROUGH UNDERGROUND SERVICES ALERT (811) WITH A SO CAL GAS CO. STANDBY EMPLOYEE. IN ADDITION, ANY EXCAVATION, SUBGRADE REMOVAL, OR COMPACTION PERFORMED WITH 2' OF THE EDGE OF A SO CAL GAS PIPELINE BUT BE DONE UTILIZING HAND OPERATED TOOLS. ALL HIGH-PRESSURE GAS LINE EXCAVATIONS MUST HAVE A SOCAL GAS EMPLOYEE ON SITE.

CONSTRUCTION KEY NOTES:

1. INSTALL WRF OFFSITE PIPELINES, VALVES, AND APPURTENANCES PER HORIZONTAL PLAN AND VERTICAL PROFILE. ALIGNMENT IS CL OF FM2 UNLESS OTHERWISE NOTED. ORDER, PLACEMENT, AND REQUIRED CLEARANCES SHALL BE DETERMINED PER SPECIFIED TRENCH DETAIL UNDER PROFILE. SIZE & CLASS OF CARRIER AND/OR CASING PIPE MATERIALS ARE LISTED SCHEMATICALLY ABOVE PROFILE.
2. INSTALL FIBER PULLBOX PER DWG 00-E-04/VLT SIZE S534.
3. WHERE FO DIVERGES FROM MAIN ALIGNMENT INSTALL PER DET 1/05-CD-09.
4. 8"SS FROM LS-3 TO BE ABANDONED OR DEMOLISHED AS NEEDED IN JUNCTION WITH APPROVED LS-3 BYPASS PLAN.
5. 6" ACP W TO BE ABANDONED AND FILLED WITH TYPE 2 LCC OR DEMOLISH AS NEEDED IN CONJUNCTION WITH APPROVED BYPASS PLAN.
6. 8" LS-3 PASSIVE BYPASS LINE POTENTIAL ALIGNMENT ROUTE PER APPROVED BYPASS PLAN. LOCATE PIPE AS FAR FROM VEHICULAR TRAFFIC AS FEASIBLE WHILE WITHIN CITY R/W. PROTECT PIPE FROM VEHICULAR TRAFFIC. SEE SPEC 01550.

20 0 20 40 FEET
HORIZ SCALE 1"=20'
5 0 5 10 FEET
VERT SCALE 1"=5'

REGISTERED PROFESSIONAL ENGINEER
MICHAEL P. FISHER
No. C071194
CIVIL
STATE OF CALIFORNIA
05/29/2020

DESIGN	P WEBSTER
DRAWN	P WEBSTER
CHECKED	T LEWIS
APPROVED	M FISHER

WATERWORKS ENGINEERS
2260 Douglas Blvd., Suite 105 • Roseville, CA 95661 • 916-780-9888

CITY OF MORRO BAY
WATER RECLAMATION FACILITY
LIFT STATION AND OFFSITE PIPELINES

PLAN AND PROFILE

FORCE MAIN PLAN AND PROFILE STA 133+00 TO STA 137+00

DATE	MAY 2020
PROJECT NUMBER	17-082
DRAWING NUMBER	05-PP-32
SHEET NUMBER	55

L:\CAD\PROJECTS\17-082 MORRO BAY PS AND PIPELINE_(S)\PROJECT FILES\DELIVERABLES\1782D-05PP132.DWG

JOB NUMBER: 17-082 FILENAME: 1782D-05PP132.DWG PLOT DATE: 05/23/20 PLOT TIME: 14:42:11

CONFORMED SET - DEC 2020

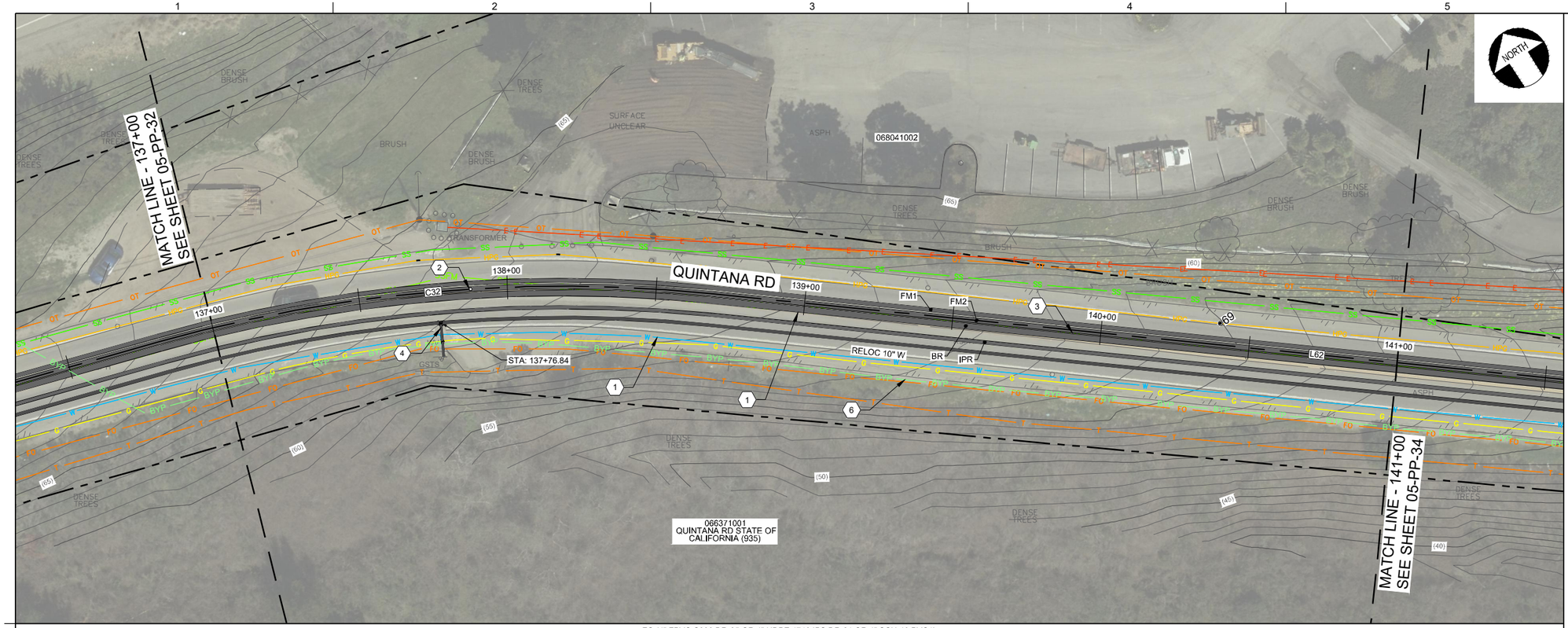

FO (4" FPVC C900 DR-25 OR 4" HDPE 4710 IPS DR-21 OR 4" SCH-40 PVC1)
FM1 (12" FPVC C900 DR-25 OR 16" HDPE 4710 IPS DR-11)
FM2 (16" FPVC C900 DR-25 OR 20" HDPE 4710 IPS DR-11)
BR (20" FPVC C900 DR-25 OR 24" HDPE 4710 IPS DR-11)
IPR (10" FPVC C900 DR-25 OR 12" HDPE 4710 IPS DR-11)
RELOC 10" W (10" FPVC C900 DR-18)

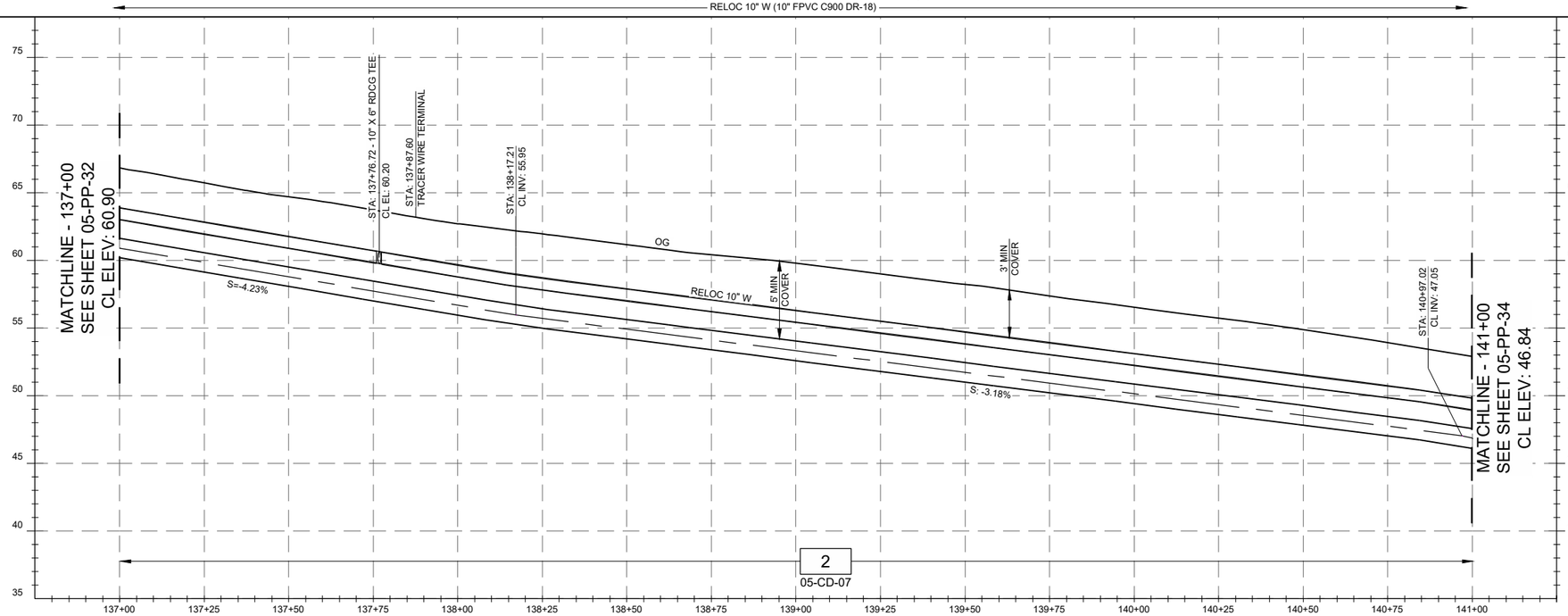

NOTES:

1. THE CONTRACTOR SHALL COMPLY WITH THE GENERAL CIVIL NOTES AND PERMITTING GENERAL NOTES.
2. HORIZONTAL ALIGNMENT AND PROFILE VERTICAL CURVES HEREIN ARE DESIGNED WITH THE MIN BENDING RADIUS OF THE LARGEST PIPELINE ASSUMING FPVC IS SELECTED. SMALLER BEND RADII MAY BE FEASIBLE DEPENDING ON THE PIPELINE MATERIAL AND LOCATION. THE CONTRACTOR MAY SUBMIT FOR APPROVAL MINOR HORIZONTAL ALIGNMENT CHANGES AND PROFILE VERTICAL CHANGES SO AS IT REDUCES FIELD CONFLICTS, REDUCES FITTINGS WHERE POSSIBLE, IS NOT ZERO SLOPED, AND DOES NOT RESULT IN A HIGH-SPOT.
3. PER SO CAL GAS REQUIREMENTS, ANY EXCAVATION WITHIN 10-FT OF A SO CAL GAS HIGH PRESSURE NATURAL GAS PIPELINE MUST BE COORDINATED THROUGH UNDERGROUND SERVICES ALERT (811) WITH A SO CAL GAS CO. STANDBY EMPLOYEE. IN ADDITION, ANY EXCAVATION, SUBGRADE REMOVAL, OR COMPACTION PERFORMED WITH 2' OF THE EDGE OF A SO CAL GAS PIPELINE BUT BE DONE UTILIZING HAND OPERATED TOOLS. ALL HIGH-PRESSURE GAS LINE EXCAVATIONS MUST HAVE A SOCAL GAS EMPLOYEE ON SITE.
4. GEOTECHNICAL BOREHOLES IN QUINTANA FROM EARTH SYSTEMS PACIFIC 2008 NOT DEPICTED.
5. QUINTANA RD FROM APPROXIMATELY STA 115+00 TO 150+50 INCLUDES OLD PORTLAND CEMENT CONCRETE OVERLAIN BY AC PAVEMENT. CONTRACTOR SHALL ASSUME 8" DEPTH OF PCC ACROSS WIDTH OF QUINTANA RD. CONTRACTOR SHALL ASSUME A 30" WIDE SECTION OF PCC ROADWAY WAS REMOVED AS PART OF PREVIOUS 2008 LS-3 8"SSFM/8"SS ALONG THE EXISTING 8"SS ALIGNMENT DEPICTED ON THE PLANS.

CONSTRUCTION KEY NOTES:

1. INSTALL WRF OFFSITE PIPELINES, VALVES, AND APPURTENANCES PER HORIZONTAL PLAN AND VERTICAL PROFILE. ALIGNMENT IS CL OF FM2 UNLESS OTHERWISE NOTED. ORDER, PLACEMENT, AND REQUIRED CLEARANCES SHALL BE DETERMINED PER SPECIFIED TRENCH DETAIL UNDER PROFILE. SIZE & CLASS OF CARRIER AND/OR CASING PIPE MATERIALS ARE LISTED SCHEMATICALLY ABOVE PROFILE.
2. INSTALL TRACER WIRE TERMINAL (2060) LOCATE OFF =3.0' FROM CL FM2.
3. 8"SS FROM LS-3 TO BE ABANDONED AND FILLED WITH TYPE 2 LCC OR DEMOLISHED AS NEEDED IN CONJUNCTION WITH APPROVED LS-3 BYPASS PLAN. ABANDONED MANHOLES TO BE FILLED WITH TYPE 2 LCC AND CONE, GRADE RINGS, AND COVER REMOVED.
4. INSTALL 10"X6" MJ RDCNG TEE. REPLACE HYDRANT CONNECTION PIPING AND 6" V-5-102 UP TO EX HYDRANT PER (2200) USING (2203) VALVE BOX. REUSE EX HYDRANT AS DIRECTED BY CITY ENGINEER.
5. 6" ACP W TO BE ABANDONED AND FILLED WITH TYPE 2 LCC OR DEMOLISH AS NEEDED IN CONJUNCTION WITH APPROVED BYPASS PLAN.
6. 8" LS-3 PASSIVE BYPASS LINE POTENTIAL ALIGNMENT ROUTE PER APPROVED BYPASS PLAN. LOCATE PIPE AS FAR FROM VEHICULAR TRAFFIC AS FEASIBLE WHILE WITHIN CITY R/W. PROTECT PIPE FROM VEHICULAR TRAFFIC. SEE SPEC 01550.

POTHOLING RESULTS:

EXISTING POTHOLING LOCATIONS AND RESULTS ARE APPROXIMATE, NOT SURVEYED, AND DO NOT PRECLUDE THE CONTRACTOR'S SOLE RESPONSIBILITY TO COMPLY WITH UTILITY VERIFICATION REQUIREMENTS.

(69) 9" A.C. PVMNT, 50" CVR, 16"HPG

20 0 20 40 FEET
HORIZ SCALE 1"=20'

5 0 5 10 FEET
VERT SCALE 1"=5'

REGISTERED PROFESSIONAL ENGINEER
MICHAEL P. PYBURN
No. C67194
CIVIL
STATE OF CALIFORNIA
05/29/2020

DESIGN	P WEBSTER
DRAWN	P WEBSTER
CHECKED	T LEWIS
APPROVED	M FISHER

WATERWORKS ENGINEERS
2260 Douglas Blvd., Suite 105 • Roseville, CA 95661 • 916-780-9888

CITY OF MORRO BAY
WATER RECLAMATION FACILITY
LIFT STATION AND OFFSITE PIPELINES

PLAN AND PROFILE
FORCE MAIN PLAN AND PROFILE
STA 137+00 TO STA 141+00

DATE: MAY 2020
PROJECT NUMBER: 17-082
DRAWING NUMBER: 05-PP-33
SHEET NUMBER: 56

L:\CAD\PROJECTS\17-082 MORRO BAY PS AND PIPELINE_(S)\PROJECT FILES\DELIVERABLES\1782D-05PP133.DWG

JOB NUMBER: 17-082 FILENAME: 1782D-05PP133.DWG PLOT DATE: 05/23/20 PLOT TIME: 14:42:52

CONFORMED SET - DEC 2020

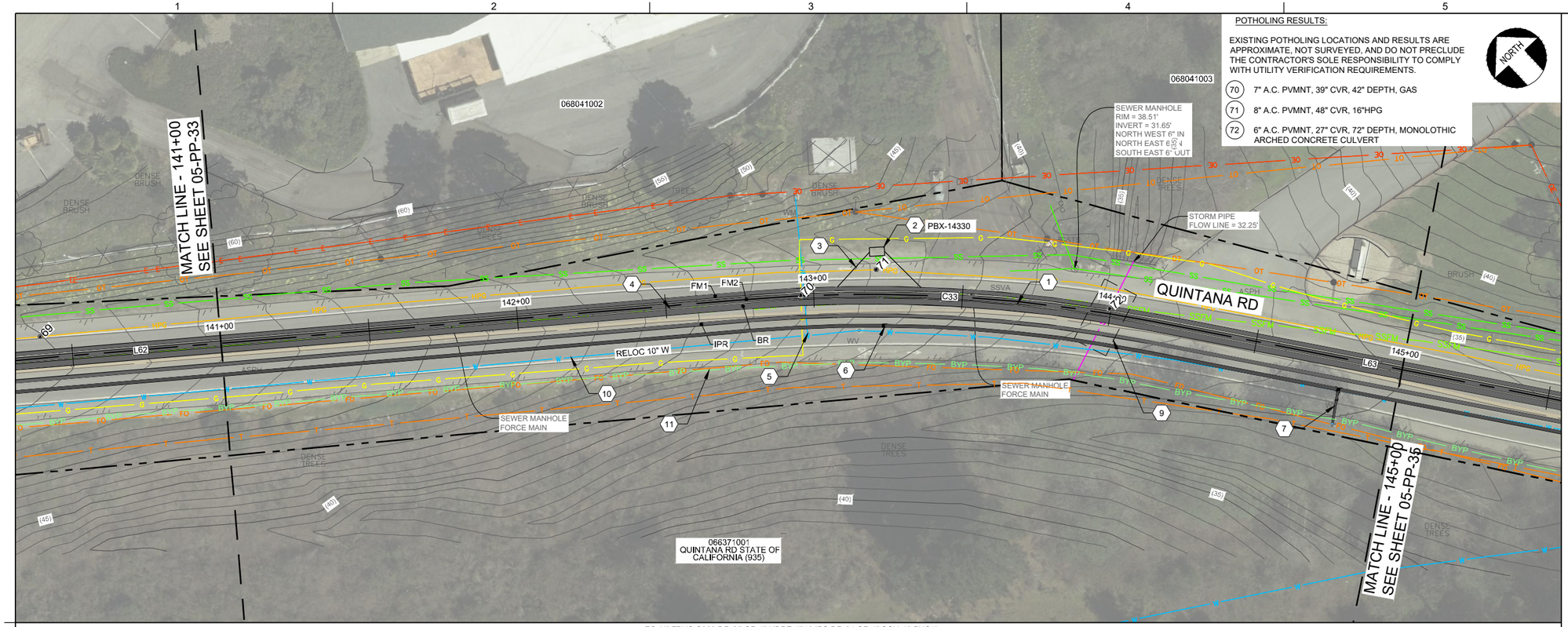

POTHOLING RESULTS:

EXISTING POTHOLING LOCATIONS AND RESULTS ARE APPROXIMATE, NOT SURVEYED, AND DO NOT PRECLUDE THE CONTRACTOR'S SOLE RESPONSIBILITY TO COMPLY WITH UTILITY VERIFICATION REQUIREMENTS.

70 7" A.C. PVMNT, 39" CVR, 42" DEPTH, GAS

71 8" A.C. PVMNT, 48" CVR, 16"HPG

72 6" A.C. PVMNT, 27" CVR, 72" DEPTH, MONOLOTHIC ARCHED CONCRETE CULVERT

FO (4" FPVC C900 DR-25 OR 4" HDPE 4710 IPS DR-21 OR 4" SCH-40 PVC1)
FM1 (12" FPVC C900 DR-25 OR 16" HDPE 4710 IPS DR-11)
FM2 (16" FPVC C900 DR-25 OR 20" HDPE 4710 IPS DR-11)
BR (20" FPVC C900 DR-25 OR 24" HDPE 4710 IPS DR-11)
IPR (10" FPVC C900 DR-25 OR 12" HDPE 4710 IPS DR-11)
RELOC 10" W (10" FPVC C900 DR-18)

CASING PER DET 1/05-CD-15

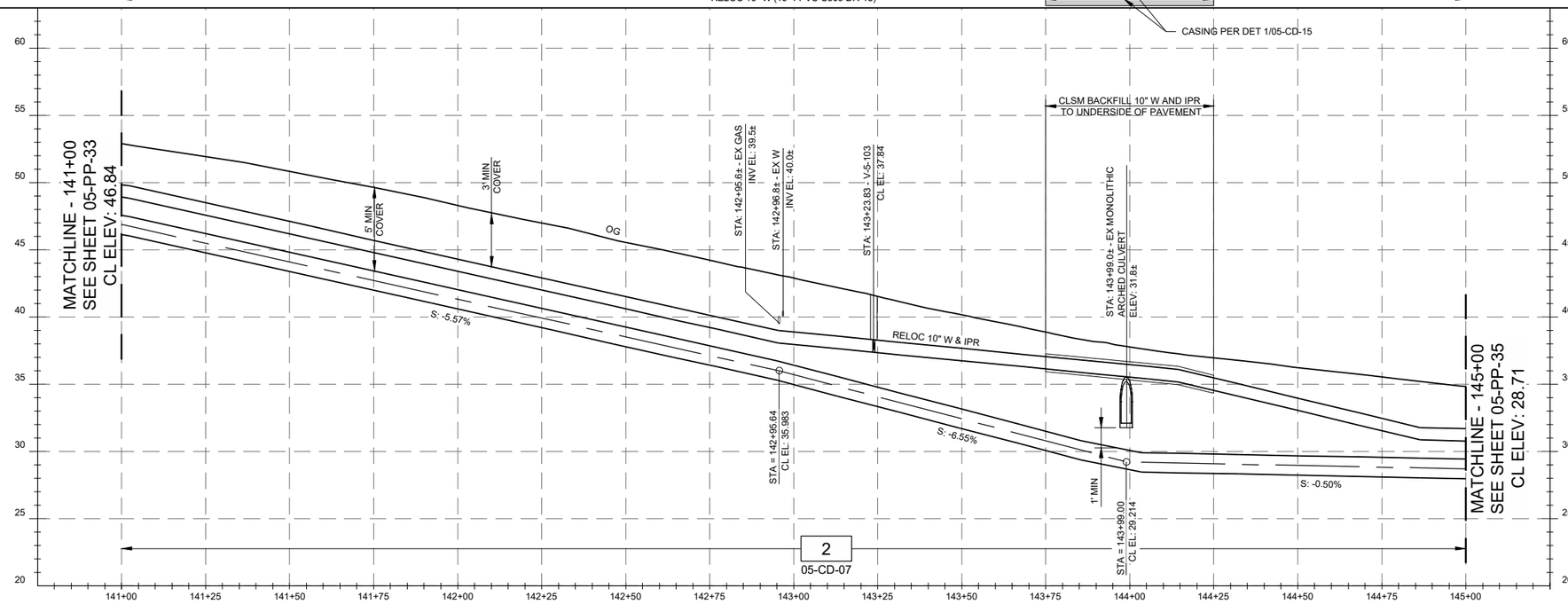

NOTES:

1. THE CONTRACTOR SHALL COMPLY WITH THE GENERAL CIVIL NOTES AND PERMITTING GENERAL NOTES.
2. HORIZONTAL ALIGNMENT AND PROFILE VERTICAL CURVES HEREIN ARE DESIGNED WITH THE MIN BENDING RADIUS OF THE LARGEST PIPELINE ASSUMING FPVC IS SELECTED. SMALLER BEND RADII MAY BE FEASIBLE DEPENDING ON THE PIPELINE MATERIAL AND LOCATION. THE CONTRACTOR MAY SUBMIT FOR APPROVAL MINOR HORIZONTAL ALIGNMENT CHANGES AND PROFILE VERTICAL CHANGES SO AS IT REDUCES FIELD CONFLICTS, REDUCES FITTINGS WHERE POSSIBLE, IS NOT ZERO SLOPED, AND DOES NOT RESULT IN A HIGH-SPOT.
3. PER SO CAL GAS REQUIREMENTS, ANY EXCAVATION WITHIN 10-FT OF A SO CAL GAS HIGH PRESSURE NATURAL GAS PIPELINE MUST BE COORDINATED THROUGH UNDERGROUND SERVICES ALERT (811) WITH A SO CAL GAS CO. STANDBY EMPLOYEE. IN ADDITION, ANY EXCAVATION, SUBGRADE REMOVAL, OR COMPACTION PERFORMED WITH 2' OF THE EDGE OF A SO CAL GAS PIPELINE BUT BE DONE UTILIZING HAND OPERATED TOOLS. ALL HIGH-PRESSURE GAS LINE EXCAVATIONS MUST HAVE A SOCAL GAS EMPLOYEE ON SITE.
4. GEOTECHNICAL BOREHOLES IN QUINTANA FROM EARTH SYSTEMS PACIFIC 2008 NOT DEPICTED.
5. QUINTANA RD FROM APPROXIMATELY STA 115+00 TO 150+50 INCLUDES OLD PORTLAND CEMENT CONCRETE OVERLAIN BY AC PAVEMENT. CONTRACTOR SHALL ASSUME 8" DEPTH OF PCC ACROSS WIDTH OF QUINTANA RD. CONTRACTOR SHALL ASSUME A 30" WIDE SECTION OF PCC ROADWAY WAS REMOVED AS PART OF PREVIOUS 2008 LS-3 8"SSFM/8"SS ALONG THE EXISTING 8"SS ALIGNMENT DEPICTED ON THE PLANS.

CONSTRUCTION KEY NOTES:

1. INSTALL WRF OFFSITE PIPELINES, VALVES, AND APPURTENANCES PER HORIZONTAL PLAN AND VERTICAL PROFILE. ALIGNMENT IS CL OF FM2 UNLESS OTHERWISE NOTED. ORDER, PLACEMENT, AND REQUIRED CLEARANCES SHALL BE DETERMINED PER SPECIFIED TRENCH DETAIL UNDER PROFILE. SIZE & CLASS OF CARRIER AND/OR CASING PIPE MATERIALS ARE LISTED SCHEMATICALLY ABOVE PROFILE.
2. INSTALL FIBER PULLBOX PER DWG 00-E-04/VLT SIZE S534.
3. WHERE FO DIVERGES FROM MAIN ALIGNMENT INSTALL PER DET 1/05-CD-09.
4. 8"SS FROM LS-3 TO BE ABANDONED AND FILLED WITH TYPE 2 LCC OR DEMOLISHED AS NEEDED IN CONJUNCTION WITH APPROVED LS-3 BYPASS PLAN. ABANDONED MANHOLES TO BE FILLED WITH TYPE 2 LCC AND CONE, GRADE RINGS, AND COVER REMOVED.
5. CUT EX WATER SERVICVE LINE, INSTALL NEW CORP STOP AND SERVICE SADDLE AND REINSTATE WATER SERVICE LINE PER CITY STD DET W-3.
6. INSTALL V-5-103 (2203)
7. INSTALL 10"X6" MJ RDCNG TEE. REPLACE HYDRANT CONNECTION PIPING AND V-5-104 UP TO EX HYDRANT PER (2200) USING (2203) VALVE BOX. REUSE EX HYDRANT AS DIRECTED BY CITY ENGINEER.
8. CUT EX WATER SERVICE LINE, INSTALL NEW CORP STOP AND SERVICE SADDLE AND REINSTATE WATER SERVICE LINE PER CITY STD DET W-3.
9. CONTRACTOR TO SUBMIT FOR APPROVAL OPEN CUT CONSTRUCTION CULVERT CROSSING AND CULVERT PROTECTION PLAN. CONTRACTOR MAY SUBMIT FOR APPROVAL A TRENCHLESS CONSTRUCTION ALTERNATIVE.
10. 6" ACP W TO BE ABANDONED AND FILLED WITH TYPE 2 LCC OR DEMOLISH AS NEEDED IN CONJUNCTION WITH APPROVED BYPASS PLAN.
11. 8" LS-3 PASSIVE BYPASS LINE POTENTIAL ALIGNMENT ROUTE PER APPROVED BYPASS PLAN. LOCATE PIPE AS FAR FROM VEHICULAR TRAFFIC AS FEASIBLE WHILE WITHIN CITY R/W. PROTECT PIPE FROM VEHICULAR TRAFFIC. SEE SPEC 01550.

20 0 20 40 FEET
HORIZ SCALE 1"=20'

5 0 5 10 FEET
VERT SCALE 1"=5'

REGISTERED PROFESSIONAL ENGINEER
MICHAEL P. PYBURN
No. C67194
CIVIL
STATE OF CALIFORNIA
05/29/2020

DESIGN	P WEBSTER
DRAWN	P WEBSTER
CHECKED	T LEWIS
APPROVED	M FISHER

WATERWORKS ENGINEERS
2260 Douglas Blvd., Suite 105 • Roseville, CA 95661 • 916-780-9888

CITY OF MORRO BAY
WATER RECLAMATION FACILITY
LIFT STATION AND OFFSITE PIPELINES

PLAN AND PROFILE
FORCE MAIN PLAN AND PROFILE
STA 141+00 TO STA 145+00

DATE: MAY 2020
PROJECT NUMBER: 17-082
DRAWING NUMBER: 05-PP-34
SHEET NUMBER: 57

L:\CAD\PROJECTS\17-082 MORRO BAY PS AND PIPELINE_(S)\PROJECT FILES\DELIVERABLES\1782D-05PP134.DWG

JOB NUMBER: 17-082 FILENAME: 1782D-05PP134.DWG PLOT DATE: 05/23/20 PLOT TIME: 14:43:39

CONFORMED SET - DEC 2020

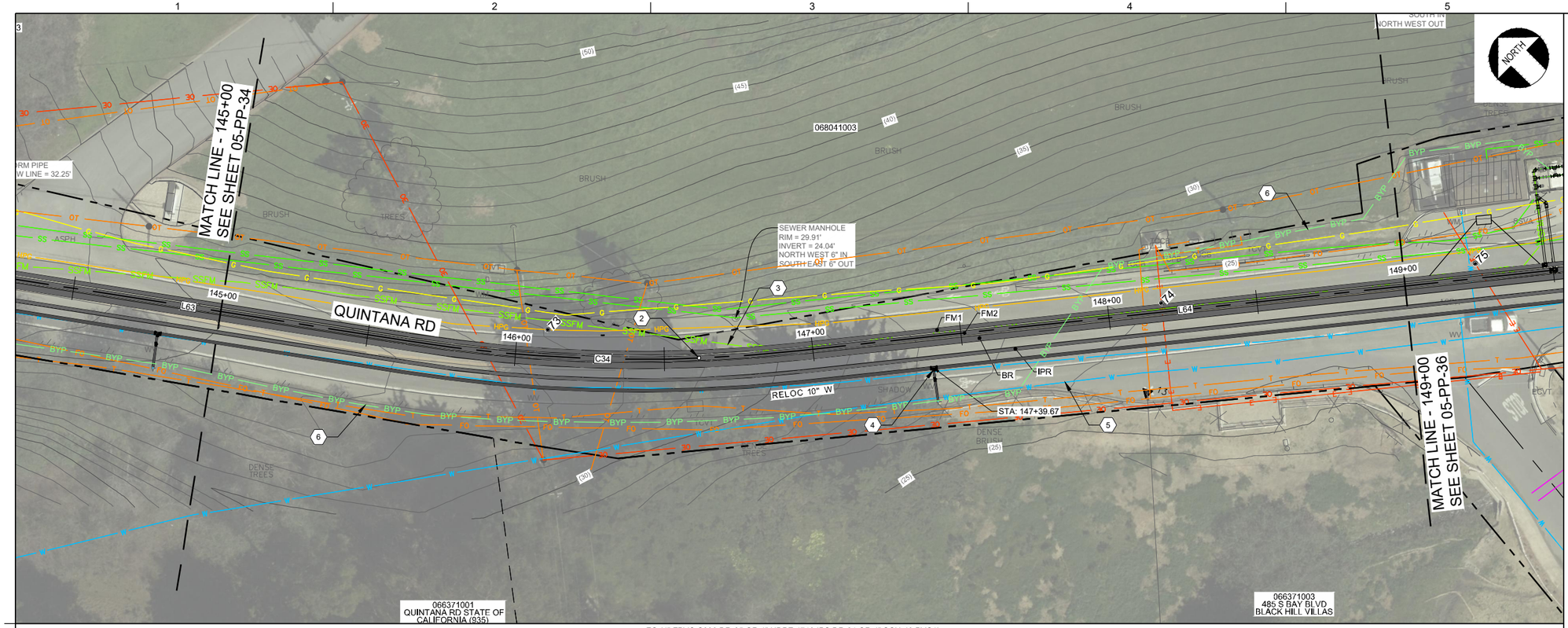

FO (4" FPVC C900 DR-25 OR 4" HDPE 4710 IPS DR-21 OR 4" SCH-40 PVC1)
FM1 (12" FPVC C900 DR-25 OR 16" HDPE 4710 IPS DR-11)
FM2 (16" FPVC C900 DR-25 OR 20" HDPE 4710 IPS DR-11)
BR (20" FPVC C900 DR-25 OR 24" HDPE 4710 IPS DR-11)
IPR (10" FPVC C900 DR-25 OR 12" HDPE 4710 IPS DR-11)
RELOC 10" W (10" FPVC C900 DR-18)

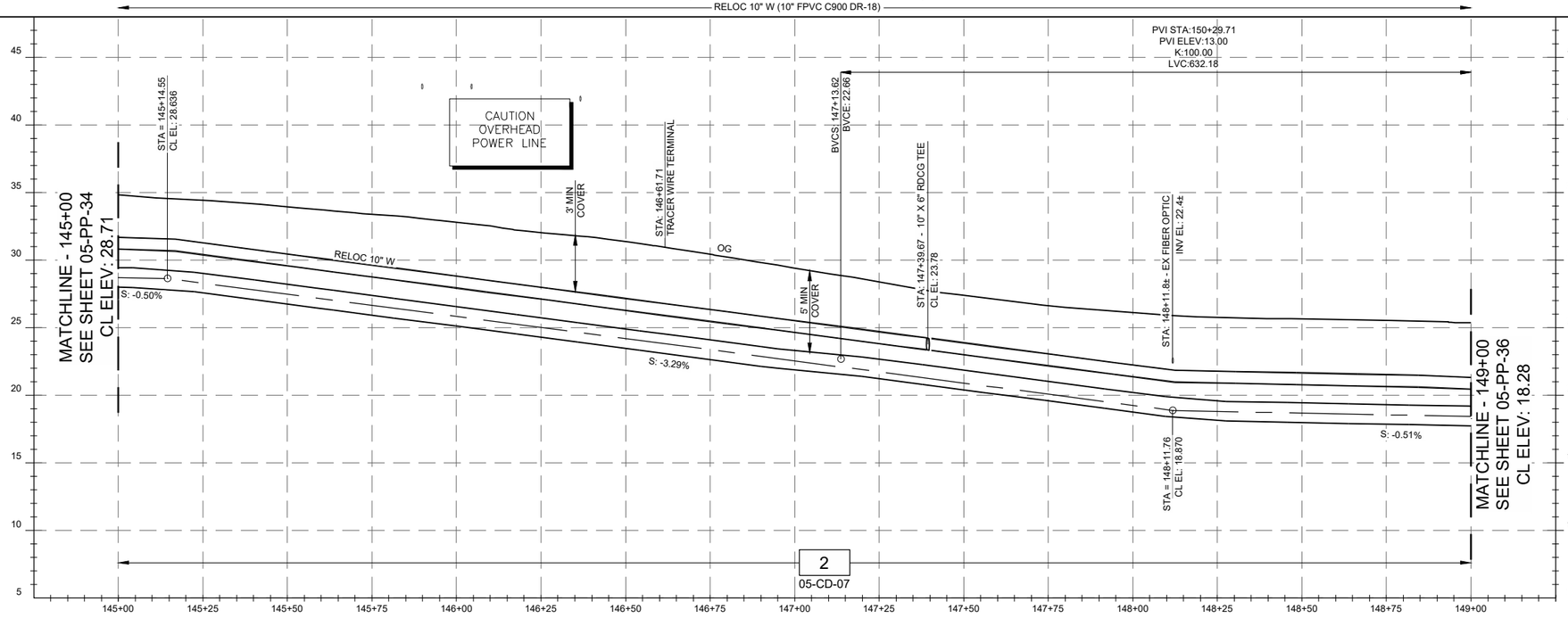

NOTES:

1. THE CONTRACTOR SHALL COMPLY WITH THE GENERAL CIVIL NOTES AND PERMITTING GENERAL NOTES.
2. HORIZONTAL ALIGNMENT AND PROFILE VERTICAL CURVES HEREIN ARE DESIGNED WITH THE MIN BENDING RADIUS OF THE LARGEST PIPELINE ASSUMING FPVC IS SELECTED. SMALLER BEND RADII MAY BE FEASIBLE DEPENDING ON THE PIPELINE MATERIAL AND LOCATION. THE CONTRACTOR MAY SUBMIT FOR APPROVAL MINOR HORIZONTAL ALIGNMENT CHANGES AND PROFILE VERTICAL CHANGES SO AS IT REDUCES FIELD CONFLICTS, REDUCES FITTINGS WHERE POSSIBLE, IS NOT ZERO SLOPED, AND DOES NOT RESULT IN A HIGH-SPOT.
3. PER SO CAL GAS REQUIREMENTS, ANY EXCAVATION WITHIN 10-FT OF A SO CAL GAS HIGH PRESSURE NATURAL GAS PIPELINE MUST BE COORDINATED THROUGH UNDERGROUND SERVICES ALERT (811) WITH A SO CAL GAS CO. STANDBY EMPLOYEE. IN ADDITION, ANY EXCAVATION, SUBGRADE REMOVAL, OR COMPACTION PERFORMED WITH 2' OF THE EDGE OF A SO CAL GAS PIPELINE BUT BE DONE UTILIZING HAND OPERATED TOOLS. ALL HIGH-PRESSURE GAS LINE EXCAVATIONS MUST HAVE A SOCAL GAS EMPLOYEE ON SITE.
4. GEOTECHNICAL BOREHOLES IN QUINTANA FROM EARTH SYSTEMS PACIFIC 2008 NOT DEPICTED.
5. QUINTANA RD FROM APPROXIMATELY STA 115+00 TO 150+50 INCLUDES OLD PORTLAND CEMENT CONCRETE OVERLAIN BY AC PAVEMENT. CONTRACTOR SHALL ASSUME 8" DEPTH OF PCC ACROSS WIDTH OF QUINTANA RD. CONTRACTOR SHALL ASSUME A 30" WIDE SECTION OF PCC ROADWAY WAS REMOVED AS PART OF PREVIOUS 2008 LS-3 8"SSFM/8"SS ALONG THE EXISTING 8"SS ALIGNMENT DEPICTED ON THE PLANS.

CONSTRUCTION KEY NOTES:

(1.) INSTALL WRF OFFSITE PIPELINES, VALVES, AND APPURTENANCES PER HORIZONTAL PLAN AND VERTICAL PROFILE. ALIGNMENT IS CL OF FM2 UNLESS OTHERWISE NOTED. ORDER, PLACEMENT, AND REQUIRED CLEARANCES SHALL BE DETERMINED PER SPECIFIED TRENCH DETAIL UNDER PROFILE. SIZE & CLASS OF CARRIER AND/OR CASING PIPE MATERIALS ARE LISTED SCHEMATICALLY ABOVE PROFILE.

(2.) INSTALL TRACER WIRE TERMINAL (2060) LOCATE ON CL FM2.

(3.) 8"SS FROM LS-3 TO BE ABANDONED AND FILLED WITH TYPE 2 LCC OR DEMOLISHED AS NEEDED IN CONJUNCTION WITH APPROVED LS-3 BYPASS PLAN. ABANDONED MANHOLES TO BE FILLED WITH TYPE 2 LCC AND CONE, GRADE RINGS, AND COVER REMOVED.

(4.) INSTALL 10"X6" MJ RDCNG TEE. REPLACE HYDRANT CONNECTION PIPING AND V-5-105 UP TO HYDRANT PER (2200) USING (2203) VALVE BOX. REUSE EX HYDRANT AS DIRECTED BY CITY ENGINEER.

(5.) 6" ACP W TO BE ABANDONED AND FILLED WITH TYPE 2 LCC OR DEMOLISH AS NEEDED IN CONJUNCTION WITH APPROVED BYPASS PLAN.

(6.) 8" LS-3 PASSIVE BYPASS LINE POTENTIAL ALIGNMENT ROUTE PER APPROVED BYPASS PLAN. LOCATE PIPE AS FAR FROM VEHICULAR TRAFFIC AS FEASIBLE WHILE WITHIN CITY R/W. PROTECT PIPE FROM VEHICULAR TRAFFIC. SEE SPEC 01550.

POTHOLING RESULTS:

EXISTING POTHOLING LOCATIONS AND RESULTS ARE APPROXIMATE, NOT SURVEYED, AND DO NOT PRECLUDE THE CONTRACTOR'S SOLE RESPONSIBILITY TO COMPLY WITH UTILITY VERIFICATION REQUIREMENTS.

(73) 9" A.C. PVMNT, 47" CVR, 16"HPG

(74) 4" A.C. PVMNT, 33" CVR, 36" DEEP, ELEC CONDUIT

20 0 20 40 FEET
HORIZ SCALE 1"=20'

5 0 5 10 FEET
VERT SCALE 1"=5'

REGISTERED PROFESSIONAL ENGINEER
MICHAEL P. PYLMAN
No. C67194
CIVIL
STATE OF CALIFORNIA
05/29/2020

DESIGN	P WEBSTER
DRAWN	P WEBSTER
CHECKED	T LEWIS
APPROVED	M FISHER

WATERWORKS ENGINEERS
2260 Douglas Blvd. Suite 105 • Roseville, CA 95661 • 916-780-9888

CITY OF MORRO BAY
WATER RECLAMATION FACILITY
LIFT STATION AND OFFSITE PIPELINES

PLAN AND PROFILE
FORCE MAIN PLAN AND PROFILE
STA 145+00 TO STA 149+00

DATE
MAY 2020
PROJECT NUMBER
17-082
DRAWING NUMBER
05-PP-35
SHEET NUMBER 58

L:\CAD\PROJECTS\17-082 MORRO BAY PS AND PIPELINE_(S)\PROJECT FILES\DELIVERABLES\1782D-05PP135.DWG

JOB NUMBER: 17-082 FILENAME: 1782D-05PP135.DWG PLOT DATE: 05/23/20 PLOT TIME: 14:44:24

CONFORMED SET - DEC 2020

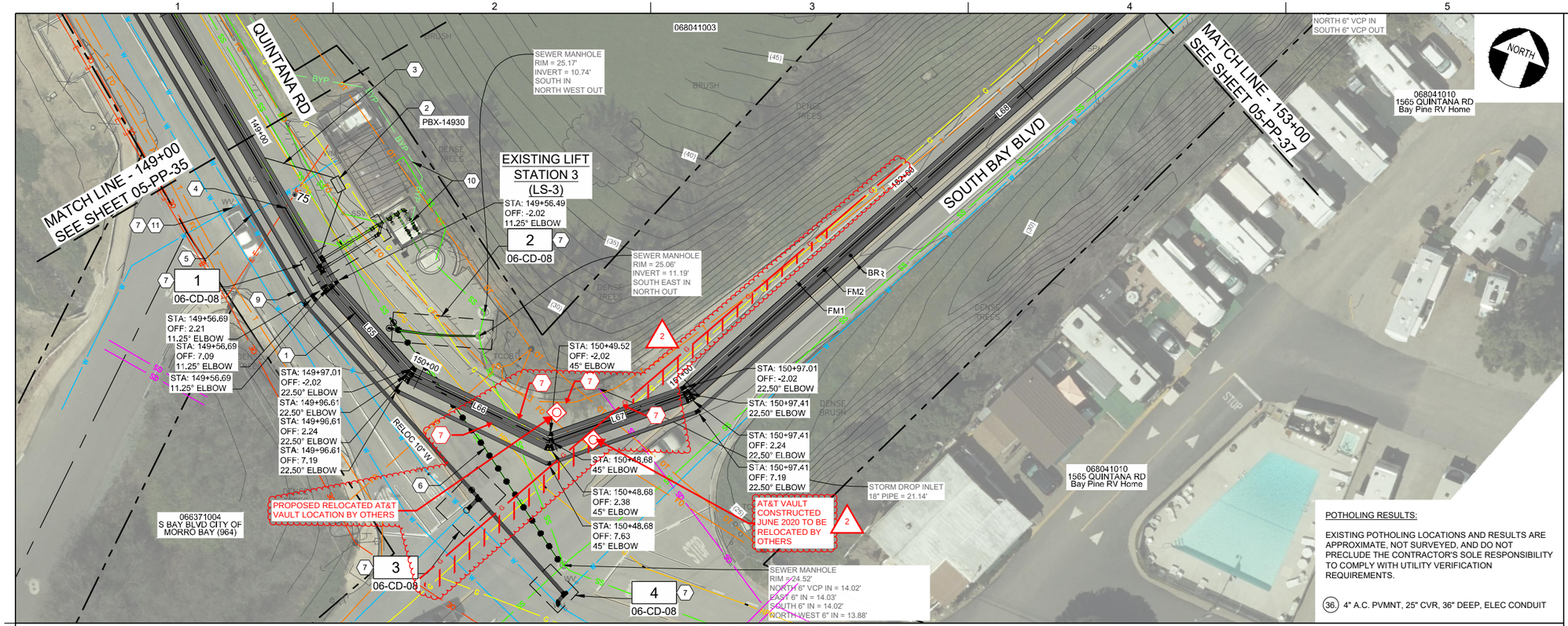

POTHOLING RESULTS:

EXISTING POTHOLING LOCATIONS AND RESULTS ARE APPROXIMATE, NOT SURVEYED, AND DO NOT PRECLUDE THE CONTRACTOR'S SOLE RESPONSIBILITY TO COMPLY WITH UTILITY VERIFICATION REQUIREMENTS.

(36) 4" A.C. PVMNT, 25" CVR, 36" DEEP, ELEC CONDUIT

FO (4" FPVC C900 DR-25 OR 4" HDPE 4710 IPS DR-21 OR 4" SCH-40 PVC1)
FM1 (12" FPVC C900 DR-25 OR 16" HDPE 4710 IPS DR-11)
FM2 (16" FPVC C900 DR-25 OR 20" HDPE 4710 IPS DR-11)
BR (20" FPVC C900 DR-25 OR 24" HDPE 4710 IPS DR-11)
IPR (10" FPVC C900 DR-25 OR 12" HDPE 4710 IPS DR-11)
RELOC 10" W (10" FPVC C900 DR-18)

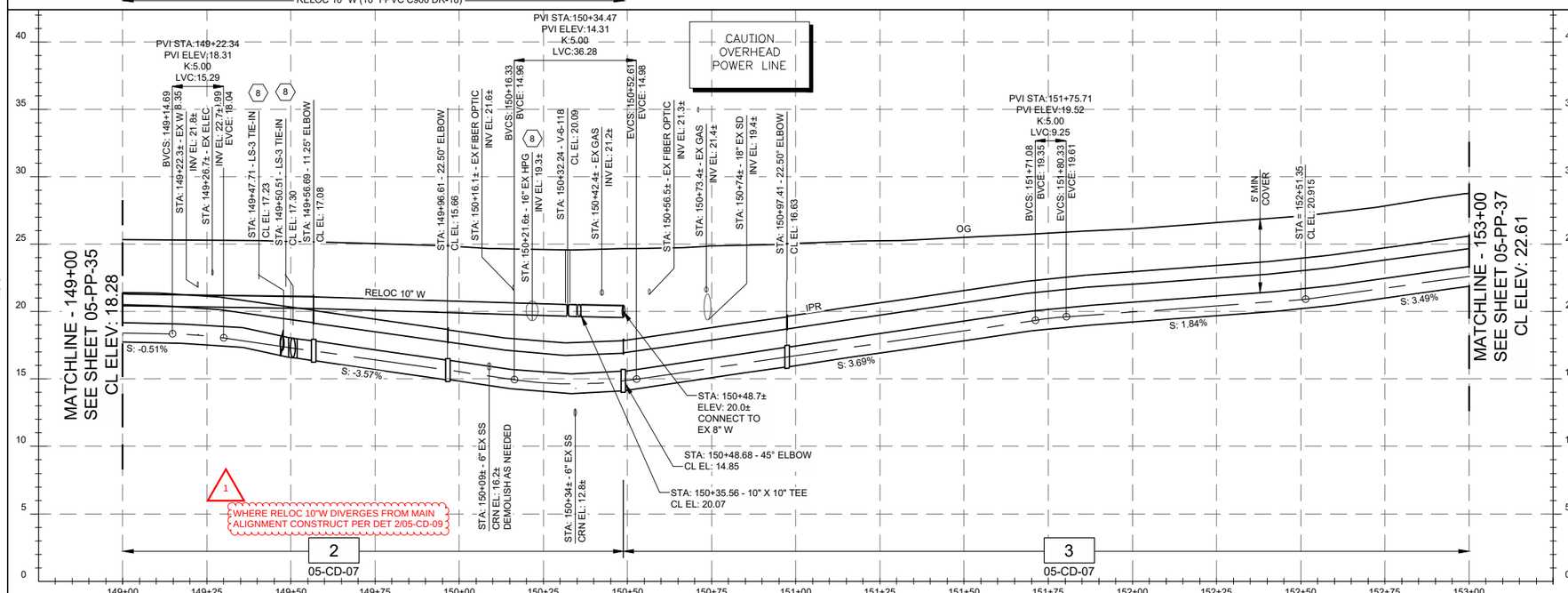

NOTES:

1. THE CONTRACTOR SHALL COMPLY WITH THE GENERAL CIVIL NOTES AND PERMITTING GENERAL NOTES.
2. HORIZONTAL ALIGNMENT AND PROFILE VERTICAL CURVES HEREIN ARE DESIGNED WITH THE MIN BENDING RADIUS OF THE LARGEST PIPELINE ASSUMING FPVC IS SELECTED. SMALLER BEND RADII MAY BE FEASIBLE DEPENDING ON THE PIPELINE MATERIAL AND LOCATION. THE CONTRACTOR MAY SUBMIT FOR APPROVAL MINOR HORIZONTAL ALIGNMENT CHANGES AND PROFILE VERTICAL CHANGES SO AS IT REDUCES FIELD CONFLICTS, REDUCES FITTINGS WHERE POSSIBLE, IS NOT ZERO SLOPED, AND DOES NOT RESULT IN A HIGH-SPOT.
3. PER SO CAL GAS REQUIREMENTS, ANY EXCAVATION WITHIN 10-FT OF A SO CAL GAS HIGH PRESSURE NATURAL GAS PIPELINE MUST BE COORDINATED THROUGH UNDERGROUND SERVICES ALERT (811) WITH A SO CAL GAS CO. STANDBY EMPLOYEE. IN ADDITION, ANY EXCAVATION, SUBGRADE REMOVAL, OR COMPACTION PERFORMED WITH 2' OF THE EDGE OF A SO CAL GAS PIPELINE BUT BE DONE UTILIZING HAND OPERATED TOOLS. ALL HIGH-PRESSURE GAS LINE EXCAVATIONS MUST HAVE A SOCAL GAS EMPLOYEE ON SITE.
4. GEOTECHNICAL BOREHOLES IN QUINTANA FROM EARTH SYSTEMS PACIFIC 2008 NOT DEPICTED.
5. QUINTANA RD FROM APPROXIMATELY STA 115+00 TO 150+50 INCLUDES OLD PORTLAND CEMENT CONCRETE OVERLAIN BY AC PAVEMENT. CONTRACTOR SHALL ASSUME 8" DEPTH OF PCC ACROSS WIDTH OF QUINTANA RD. CONTRACTOR SHALL ASSUME A 30" WIDE SECTION OF PCC ROADWAY WAS REMOVED AS PART OF PREVIOUS 2008 LS-3 8"SSFM/8"SS ALONG THE EXISTING 8" SS ALIGNMENT DEPICTED ON THE PLANS.

CONSTRUCTION KEY NOTES:

1. INSTALL WRF OFFSITE PIPELINES, VALVES, AND APPURTENANCES PER HORIZONTAL PLAN AND VERTICAL PROFILE. ALIGNMENT IS CL OF FM2 UNLESS OTHERWISE NOTED. ORDER, PLACEMENT, AND REQUIRED CLEARANCES SHALL BE DETERMINED PER SPECIFIED TRENCH DETAIL UNDER PROFILE. SIZE & CLASS OF CARRIER AND/OR CASING PIPE MATERIALS ARE LISTED SCHEMATICALLY ABOVE PROFILE.
2. INSTALL FIBER PULLBOX PER DWG 00-E-04/VLT SIZE S534.
3. WHERE FO DIVERGES FROM MAIN ALIGNMENT INSTALL PER DET 1/05-CD-09
4. 8" SS FROM LS-3 TO BE ABANDONED AND FILLED WITH TYPE 2 LCC OR DEMOLISHED AS NEEDED IN CONJUNCTION WITH APPROVED LS-3 BYPASS PLAN. ABANDONED MANHOLES TO BE FILLED WITH TYPE 2 LCC AND CONE, GRADE RINGS, AND COVER REMOVED.
5. CUT EX WATER SERVICE LINE. INSTALL NEW CORP STOP AND SERVICE SADDLE AND REINSTATE WATER SERVICE LINE PER CITY STD DET W-3.
6. 6" SS TO BE ABANDONED AND FILLED WITH TYPE 2 LCC OR DEMOLISHED AS NEEDED. DOWNSTREAM INLET AT MANHOLE TO BE PLUGGED WITH MECHANICAL PLUG AND GROUTED IN PLACE.
7. HIGH PRIORITY UTILITY VERIFICATION REQUIRED, TYP OF 9
8. HPG CROSSING. CONTRACTOR TO SUBMIT PIPE SUPPORT PLAN TO CONSTRUCTION MANAGER AND SOCAL GAS.
9. 6" ACP W TO BE ABANDONED AND FILLED WITH TYPE 2 LCC OR DEMOLISH AS NEEDED IN CONJUNCTION WITH APPROVED BYPASS PLAN.
10. 8" LS-3 PASSIVE BYPASS LINE POTENTIAL ALIGNMENT ROUTE PER APPROVED BYPASS PLAN. LOCATE PIPE AS FAR FROM VEHICULAR TRAFFIC AS FEASIBLE WHILE WITHIN CITY R/W. PROTECT PIPE FROM VEHICULAR TRAFFIC. SEE SPEC 01550. COORDINATE BYPASS TIE-IN LOCATION AT LS-3 WITH CONSTRUCTION MANAGER.
11. CONNECT 10"W RELOC W TO EX GATE VALVE ON WATER SERVICE LINE. VERIFY SIZE AND CONNECTION LOCATION. INSTALL THRUST BLOCK AT FACE OF EXISTING VALVE IN COORDINATION WITH OWNER.

20 0 20 40 FEET
HORIZ SCALE 1"=20'

5 0 5 10 FEET
VERT SCALE 1"=5'

REGISTERED PROFESSIONAL ENGINEER
MICHAEL P. STEIN
No. C61794
CIVIL
STATE OF CALIFORNIA
05/29/2020

DESIGN	P WEBSTER
DRAWN	P WEBSTER
CHECKED	T LEWIS
APPROVED	M FISHER

WATERWORKS ENGINEERS
2260 Douglas Blvd., Suite 105 • Roseville, CA 95661 • 916-780-9888

CITY OF MORRO BAY
WATER RECLAMATION FACILITY
LIFT STATION AND OFFSITE PIPELINES

PLAN AND PROFILE
FORCE MAIN PLAN AND PROFILE
STA 149+00 TO STA 153+00

DATE
MAY 2020
PROJECT NUMBER
17-082
DRAWING NUMBER
05-PP-36
SHEET NUMBER 59

L:\CAD\PROJECTS\17-082 MORRO BAY PS AND PIPELINE_(S)\PROJECT FILES\DELIVERABLES\1782D-05PP136.DWG

JOB NUMBER: 17-082 FILENAME: 1782D-05PP136.DWG PLOT DATE: 05/23/20 PLOT TIME: 14:45:08

CONFORMED SET - DEC 2020

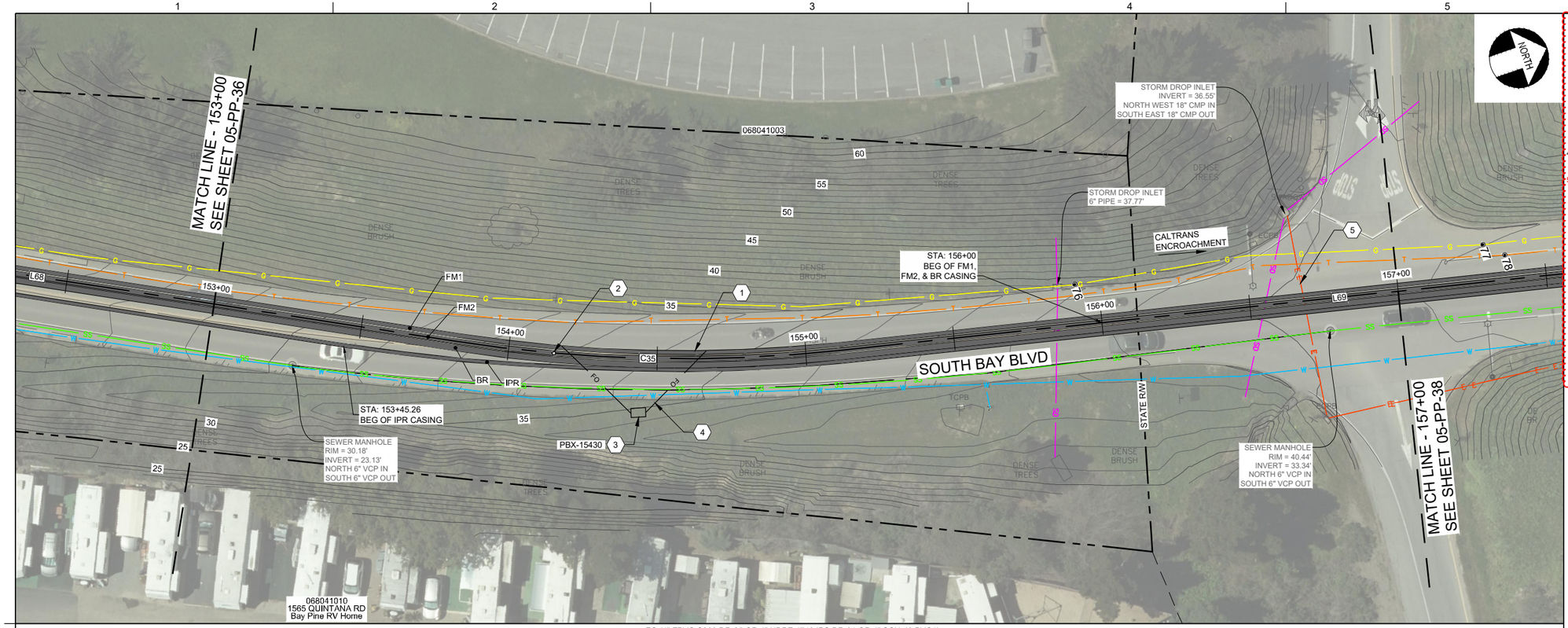

FO (4" FPVC C900 DR-25 OR 4" HDPE 4710 IPS DR-21 OR 4" SCH-40 PVC1)
FM1 (12" FPVC C900 DR-25 OR 16 HDPE 4710 IPS DR-11)
FM1 (12" FPVC C900 DR-25 OR 16" HDPE 4710 IPS DR-11) IN CASING PER DET 1/05-CD-15 (FILL ANNULUS TYPE 2 LCC)
FM2 (16" FPVC C900 DR-25 OR 20" HDPE 4710 IPS DR-11)
FM2 (16" FPVC C900 DR-25 OR 20" HDPE 4710 IPS DR-11) IN CASING PER DET 1/05-CD-15 (FILL ANNULUS TYPE 2 LCC)
BR (20" FPVC C900 DR-25 OR 24" HDPE 4710 IPS DR-11)
BR (20" FPVC C900 DR-25 OR 24" HDPE 4710 IPS DR-11) IN CASING PER DET 1/05-CD-15 (FILL ANNULUS TYPE 2 LCC)
IPR (10" FPVC C900 DR-25 OR 12" HDPE 4710 DR-11)
IPR (10" FPVC C900 DR-25 OR 12" HDPE 4710 DR-11) IN CASING PER DET 1/05-CD-15 (FILL ANNULUS TYPE 2 LCC)

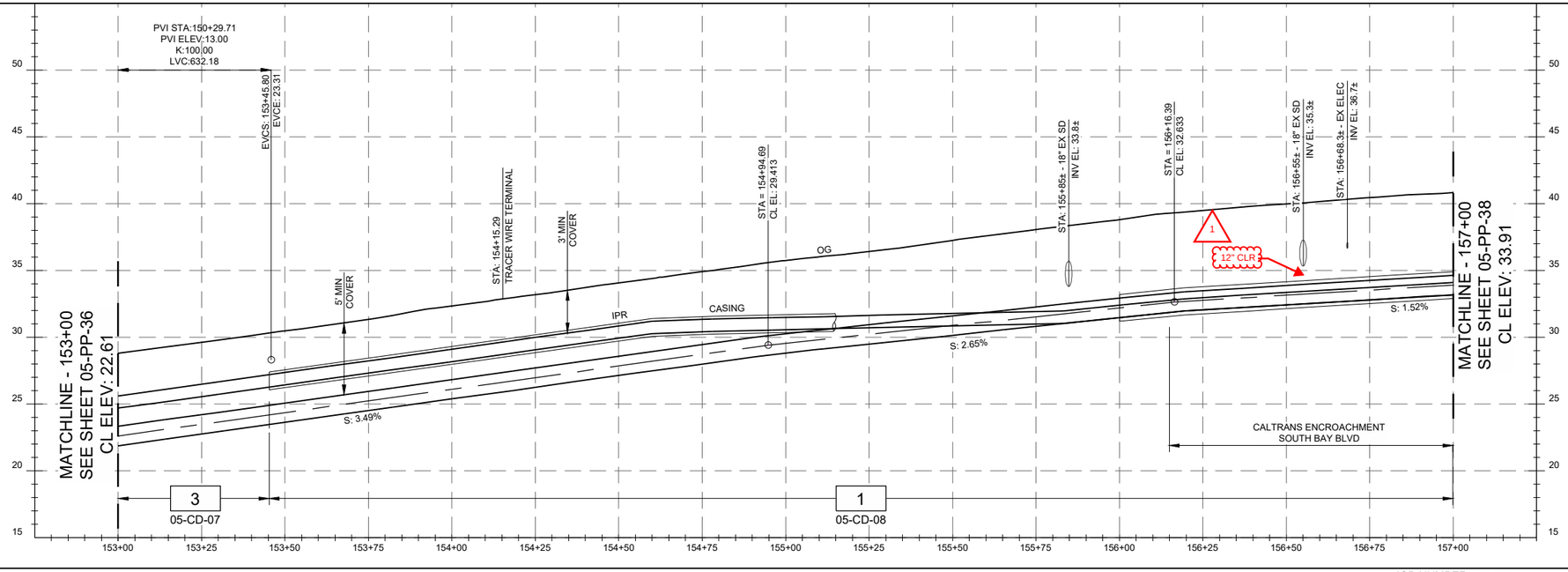

CALTRANS SHEET NOTES

1. CONTRACTOR SHALL PROVIDE SHORING PLANS AND CALCULATIONS FOR ALL EXCAVATIONS GREATER THAN 5' DEEP. SHORING PLANS SHALL BE SIGNED AND STAMPED BY A PROFESSIONAL CIVIL ENGINEER REGISTERED IN STATE OF CALIFORNIA.
2. PAVEMENT STRIPING/MARKING SHALL BE REPLACED IN KIND IN ACCORDANCE WITH CALTRANS STANDARDS
3. SIDEWALKS AND CURB RAMPS IMPACTED BY CONSTRUCTION SHALL BE REPLACED TO CURRENT CALTRANS STANDARDS AND ADA CERTIFICATION OF COMPLIANCE REQUIREMENTS.
4. DURING NON-WORKING HOURS, OPEN TRENCHES SHALL BE COVERED, BACKFILLED, OR PROTECTED
5. AT ANY LOCATION WHERE THE SPEED LIMIT IS 45 MPH OR GREATER, STEEL PLATING SHALL BE GROUND IN, FLUSH WITH THE ROADWAY. FOR STEEL PLATES WITH SPANS GREATER THAN 5 FEET 3 INCHES, A STRUCTURAL DESIGN SHALL BE PREPARED, SIGNED, AND STAMPED BY A PROFESSIONALCIVIL ENGINEER REGISTERED IN THE STATE OF CALIFORNIA.
6. PROTECT IN PLACE EXISTING CALTRANS LIGHTING CONDUITS AT SOUTH BAY BLVD. IF ANY DAMAGE OCCURS, CALTRANS FAICLITIES SHALL BE REPLACED IN KIND BY THE CONTRACTOR AT NO COST TO THE STATE
7. CONTRACTOR SHALL OBTAIN A CALTRANS DOUBLE PERMIT PRIOR TO THE WORK.
8. TWO WEEKS PRIOR TO THE START OF THE WORK, CONTRACTOR SHALL CONTACT THE CALTRANS ENCROACHMENT PERMIT INSPECTOR (PETER MUTUTWA, 805-276-1570)
9. CONTRACTOR SHALL PROVIDE PROTECTION PLANS FOR ALL EXISTING UTILITIES WHICH MAY BE DISTURBED DURING TRENCHING OPERATIONS. PROTECTION PLANS SHALL BE SIGNED AND STAMPED BY A PROFESSIONAL CIVIL ENGINEER REGISTERED IN THE STATE OF CALIFORNIA.

NOTES:

1. THE CONTRACTOR SHALL COMPLY WITH THE GENERAL CIVIL NOTES AND PERMITTING GENERAL NOTES.
2. HORIZONTAL ALIGNMENT AND PROFILE VERTICAL CURVES HEREIN ARE DESIGNED WITH THE MIN BENDING RADIUS OF THE LARGEST PIPELINE ASSUMING FPVC IS SELECTED. SMALLER BEND RADII MAY BE FEASIBLE DEPENDING ON THE PIPELINE MATERIAL AND LOCATION. THE CONTRACTOR MAY SUBMIT FOR APPROVAL MINOR HORIZONTAL ALIGNMENT CHANGES AND PROFILE VERTICAL CHANGES SO AS IT REDUCES FIELD CONFLICTS, REDUCES FITTINGS WHERE POSSIBLE, IS NOT ZERO SLOPED, AND DOES NOT RESULT IN A HIGH-SPOT.
3. PER SO CAL GAS REQUIREMENTS, ANY EXCAVATION WITHIN 10-FT OF A SO CAL GAS HIGH PRESSURE NATURAL GAS PIPELINE MUST BE COORDINATED THROUGH UNDERGROUND SERVICES ALERT (811) WITH A SO CAL GAS CO. STANDBY EMPLOYEE. IN ADDITION, ANY EXCAVATION, SUBGRADE REMOVAL, OR COMPACTION PERFORMED WITH 2' OF THE EDGE OF A SO CAL GAS PIPELINE BUT BE DONE UTILIZING HAND OPERATED TOOLS. ALL HIGH-PRESSURE GAS LINE EXCAVATIONS MUST HAVE A SOCAL GAS EMPLOYEE ON SITE.

CONSTRUCTION KEY NOTES:

1. INSTALL WRF OFFSITE PIPELINES, VALVES, AND APPURTENANCES PER HORIZONTAL PLAN AND VERTICAL PROFILE. ALIGNMENT IS CL OF FM2 UNLESS OTHERWISE NOTED. ORDER, PLACEMENT, AND REQUIRED CLEARANCES SHALL BE DETERMINED PER SPECIFIED TRENCH DETAIL UNDER PROFILE. SIZE & CLASS OF CARRIER AND/OR CASING PIPE MATERIALS ARE LISTED SCHEMATICALLY ABOVE PROFILE.
2. INSTALL TRACER WIRE TERMINAL (2060) LOCATE ON CL FM2.
3. INSTALL FIBER PULLBOX PER DWG 00-E-04/VLT SIZE S534.
4. WHERE FO DIVERGES FROM MAIN ALIGNMENT INSTALL PER DET 1/05-CD-09.
5. PROTECT IN PLACE EX CALTRANS LIGHTING CONDUITS. SEE CALTRANS SHEET NOTE 6.

POTHOLING RESULTS:

EXISTING POTHOLING LOCATIONS AND RESULTS ARE APPROXIMATE, NOT SURVEYED, AND DO NOT PRECLUDE THE CONTRACTOR'S SOLE RESPONSIBILITY TO COMPLY WITH UTILITY VERIFICATION REQUIREMENTS.

(76) UNPAVED, 30" CVR, 34" DEPTH, GAS

20 0 20 40 FEET
HORIZ SCALE 1"=20'
5 0 5 10 FEET
VERT SCALE 1"=5'

REGISTERED PROFESSIONAL ENGINEER
MICHAEL P. HALEY
No. C071194
CIVIL
STATE OF CALIFORNIA
05/29/2020

DESIGN	P WEBSTER
DRAWN	P WEBSTER
CHECKED	T LEWIS
APPROVED	M FISHER

WATERWORKS ENGINEERS
2260 Douglas Blvd., Suite 105 • Roseville, CA 95661 • 916-780-9888

CITY OF MORRO BAY
WATER RECLAMATION FACILITY
LIFT STATION AND OFFSITE PIPELINES

PLAN AND PROFILE
FORCE MAIN PLAN AND PROFILE
STA 153+00 TO STA 157+00

DATE	MAY 2020
PROJECT NUMBER	17-082
DRAWING NUMBER	05-PP-37
SHEET NUMBER	60

L:\CAD\PROJECTS\17-082 MORRO BAY PS AND PIPELINE_(S)\PROJECT FILES\DELIVERABLES\1782D-05PP137.DWG

JOB NUMBER: 17-082 FILENAME: 1782D-05PP137.DWG PLOT DATE: 05/23/20 PLOT TIME: 14:45:54

CONFORMED SET - DEC 2020

CALTRANS SHEET NOTES

1. CONTRACTOR SHALL PROVIDE SHORING PLANS AND CALCULATIONS FOR ALL EXCAVATIONS GREATER THAN 5' DEEP. SHORING PLANS SHALL BE SIGNED AND STAMPED BY A PROFESSIONAL CIVIL ENGINEER REGISTERED IN STATE OF CALIFORNIA.
2. PAVEMENT STRIPING/MARKING SHALL BE REPLACED IN KIND IN ACCORDANCE WITH CALTRANS STANDARDS
3. SIDEWALKS AND CURB RAMPS IMPACTED BY CONSTRUCTION SHALL BE REPLACED TO CURRENT CALTRANS STANDARDS AND ADA CERTIFICATION OF COMPLIANCE REQUIREMENTS.
4. DURING NON-WORKING HOURS, OPEN TRENCHES SHALL BE COVERED, BACKFILLED, OR PROTECTED
5. AT ANY LOCATION WHERE THE SPEED LIMIT IS 45 MPH OR GREATER, STEEL PLATING SHALL BE GROUND IN, FLUSH WITH THE ROADWAY. FOR STEEL PLATES WITH SPANS GREATER THAN 5 FEET 3 INCHES, A STRUCTURAL DESIGN SHALL BE PREPARED, SIGNED, AND STAMPED BY A PROFESSIONALCIVIL ENGINEER REGISTERED IN THE STATE OF CALIFORNIA.
6. PROTECT IN PLACE EXISTING CALTRANS LIGHTING CONDUITS AT SOUTH BAY BLVD. IF ANY DAMAGE OCCURS, CALTRANS FAICLITIES SHALL BE REPLACED IN KIND BY THE CONTRACTOR AT NO COST TO THE STATE
7. CONTRACTOR SHALL OBTAIN A CALTRANS DOUBLE PERMIT PRIOR TO THE WORK.
8. TWO WEEKS PRIOR TO THE START OF THE WORK, CONTRACTOR SHALL CONTACT THE CALTRANS ENCROACHMENT PERMIT INSPECTOR (PETER MUTUTWA, 805-276-1570)
9. CONTRACTOR SHALL PROVIDE PROTECTION PLANS FOR ALL EXISTING UTILITIES WHICH MAY BE DISTURBED DURING TRENCHING OPERATIONS. PROTECTION PLANS SHALL BE SIGNED AND STAMPED BY A PROFESSIONAL CIVIL ENGINEER REGISTERED IN THE STATE OF CALIFORNIA.

BR 49-0177 BAYWOOD PARK ROAD UNDERCROSSING
LOCATION: 05-SLO-001-27.88
KEY DIMENSIONS: 40'-0" CLR SPAN, 14'-10" OVERHEAD CLR
STRUCTURE DESCRIPTION: RC SLAB, RC DIAPHRAGM ABUTMENTS W/ NON MONOLITHIC RETAINING WALLS, RC SPREAD FOOTINGS

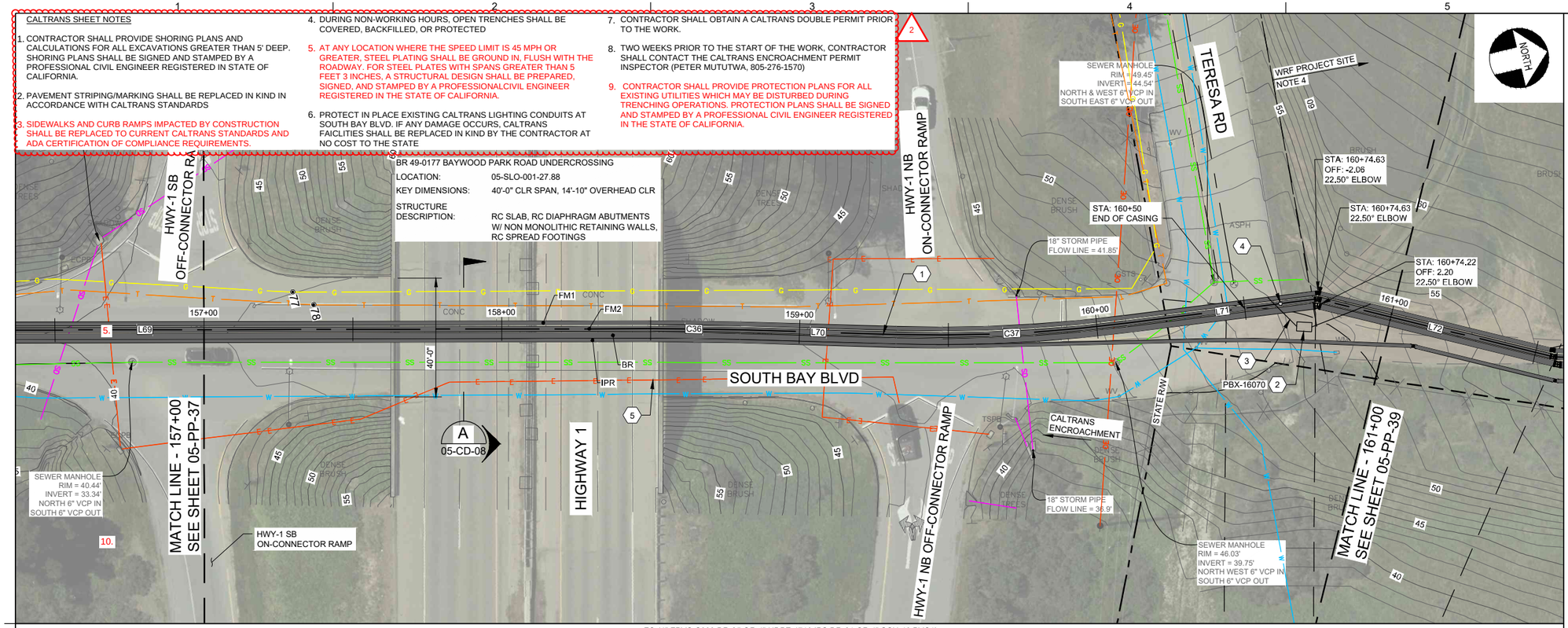

NOTES:

1. THE CONTRACTOR SHALL COMPLY WITH THE GENERAL CIVIL NOTES AND PERMITTING GENERAL NOTES.
2. HORIZONTAL ALIGNMENT AND PROFILE VERTICAL CURVES HEREIN ARE DESIGNED WITH THE MIN BENDING RADIUS OF THE LARGEST PIPELINE ASSUMING FPVC IS SELECTED. SMALLER BEND RADII MAY BE FEASIBLE DEPENDING ON THE PIPELINE MATERIAL AND LOCATION. THE CONTRACTOR MAY SUBMIT FOR APPROVAL MINOR HORIZONTAL ALIGNMENT CHANGES AND PROFILE VERTICAL CHANGES SO AS IT REDUCES FIELD CONFLICTS, REDUCES FITTINGS WHERE POSSIBLE, IS NOT ZERO SLOPED, AND DOES NOT RESULT IN A HIGH-SPOT.
3. PER SO CAL GAS REQUIREMENTS, ANY EXCAVATION WITHIN 10-FT OF A SO CAL GAS HIGH PRESSURE NATURAL GAS PIPELINE MUST BE COORDINATED THROUGH UNDERGROUND SERVICES ALERT (811) WITH A SO CAL GAS CO. STANDBY EMPLOYEE. IN ADDITION, ANY EXCAVATION, SUBGRADE REMOVAL, OR COMPACTION PERFORMED WITH 2' OF THE EDGE OF A SO CAL GAS PIPELINE BUT BE DONE UTILIZING HAND OPERATED TOOLS. ALL HIGH-PRESSURE GAS LINE EXCAVATIONS MUST HAVE A SOCAL GAS EMPLOYEE ON SITE.
4. THE WRF PROJECT SITE IS CURRENTLY IN CONSTRUCTION AND MAY APPEAR SUBSTANTIALLY DIFFERENT THAN WHAT IS DEPICTED IN THE DESIGN DRAWING ORTHOIMAGERY. CONSTRUCTION ACCESS LIMITS AND OTHER ITEMS SUCH AS ACCESSIBILITY AND LAYDOWN CONSTRAINTS SHALL BE PROVIDED BY THE CONSTRUCTION MANAGER AFTER PROJECT COMMENCEMENT IN COORDINATION WITH WRF CONSTRUCTION ACTIVITIES.

CONSTRUCTION KEY NOTES:

1. INSTALL WRF OFFSITE PIPELINES, VALVES, AND APPURTENANCES PER HORIZONTAL PLAN AND VERTICAL PROFILE. ALIGNMENT IS CL OF FM2 UNLESS OTHERWISE NOTED. ORDER, PLACEMENT, AND REQUIRED CLEARANCES SHALL BE DETERMINED PER SPECIFIED TRENCH DETAIL UNDER PROFILE. SIZE & CLASS OF CARRIER AND/OR CASING PIPE MATERIALS ARE LISTED SCHEMATICALLY ABOVE PROFILE.
2. INSTALL FIBER PULLBOX PER DWG 00-E-04/VLT SIZE S534.
3. WHERE FO DIVERGES FROM MAIN ALIGNMENT INSTALL PER DET 1/05-CD-09.
4. INSTALL TRACER WIRE TERMINAL (2060) AND GROUND ROD (16410)
5. PROTECT IN PLACE EX CALTRANS LIGHTING CONDUITS. SEE CALTRANS SHEET NOTE 7.

FO (4" FPVC C900 DR-25 OR 4" HDPE 4710 IPS DR-21 OR 4" SCH-40 PVC1)
FM1 (12" FPVC C900 DR-25 OR 16" HDPE 4710 IPS DR-11) IN CASING PER DET 1/05-CD-15 (FILL ANNULUS TYPE 2 LCC)
FM2 (16" FPVC C900 DR-25 OR 20" HDPE 4710 IPS DR-11) IN CASING PER DET 1/05-CD-15 (FILL ANNULUS TYPE 2 LCC)
BR (20" FPVC C900 DR-25 OR 24" HDPE 4710 IPS DR-11) IN CASING PER DET 1/05-CD-15 (FILL ANNULUS TYPE 2 LCC)
IPR (10" FPVC C900 DR-25 OR 12" HDPE 4710 IPS DR-11) IN CASING PER DET 1/05-CD-15 (FILL ANNULUS TYPE 2 LCC)
FM1 (12" FPVC C900 DR-25 OR 16" HDPE 4710 IPS DR-11)
FM2 (16" FPVC C900 DR-25 OR 20" HDPE 4710 IPS DR-11)
BR (20" FPVC C900 DR-25 OR 24" HDPE 4710 IPS DR-11)

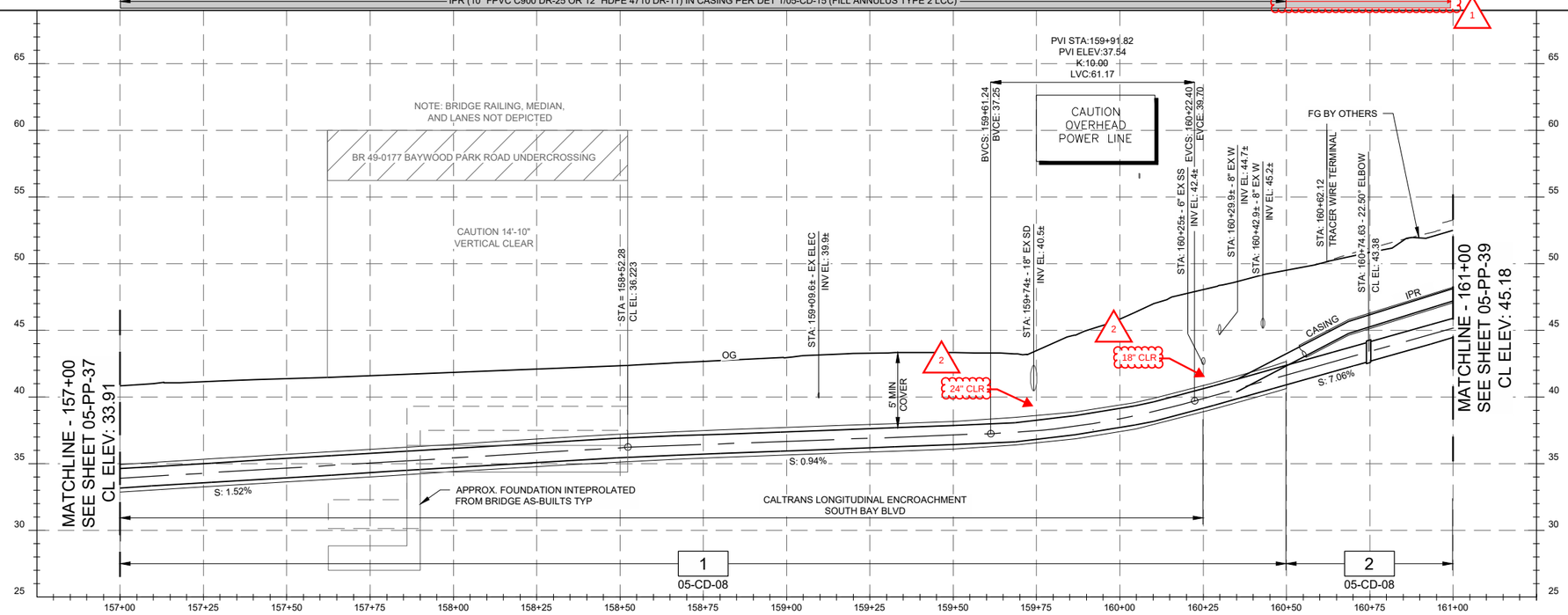

POTHOLING RESULTS:

EXISTING POTHOLING LOCATIONS AND RESULTS ARE APPROXIMATE, NOT SURVEYED, AND DO NOT PRECLUDE THE CONTRACTOR'S SOLE RESPONSIBILITY TO COMPLY WITH UTILITY VERIFICATION REQUIREMENTS.

(77) 7" A.C. PVMNT, 33" CVR, 37" DEPTH, GAS

(78) 8" A.C. PVMNT, 37" CVR, 45" DEPTH, TELE CONDUIT

20 0 20 40 FEET
HORIZ SCALE 1"=20'
5 0 5 10 FEET
VERT SCALE 1"=5'

REGISTERED PROFESSIONAL ENGINEER MICHAEL P. STEIN No. C61794 CIVIL STATE OF CALIFORNIA
05/29/2020

DESIGN P WEBSTER
DRAWN P WEBSTER
CHECKED T LEWIS
APPROVED M FISHER

WATERWORKS ENGINEERS
2260 Douglas Blvd., Suite 105 • Roseville, CA 95661 • 916-780-9888

CITY OF MORRO BAY
WATER RECLAMATION FACILITY
LIFT STATION AND OFFSITE PIPELINES

PLAN AND PROFILE
FORCE MAIN PLAN AND PROFILE
STA 157+00 TO STA 161+00

DATE MAY 2020
PROJECT NUMBER 17-082
DRAWING NUMBER 05-PP-38
SHEET NUMBER 61

L:\CAD\PROJECTS\17-082 MORRO BAY PS AND PIPELINE_(S)\PROJECT FILES\DELIVERABLES\1782D-05PP138.DWG

JOB NUMBER: 17-082 FILENAME: 1782D-05PP138.DWG PLOT DATE: 05/23/20 PLOT TIME: 14:46:45

CONFORMED SET - DEC 2020

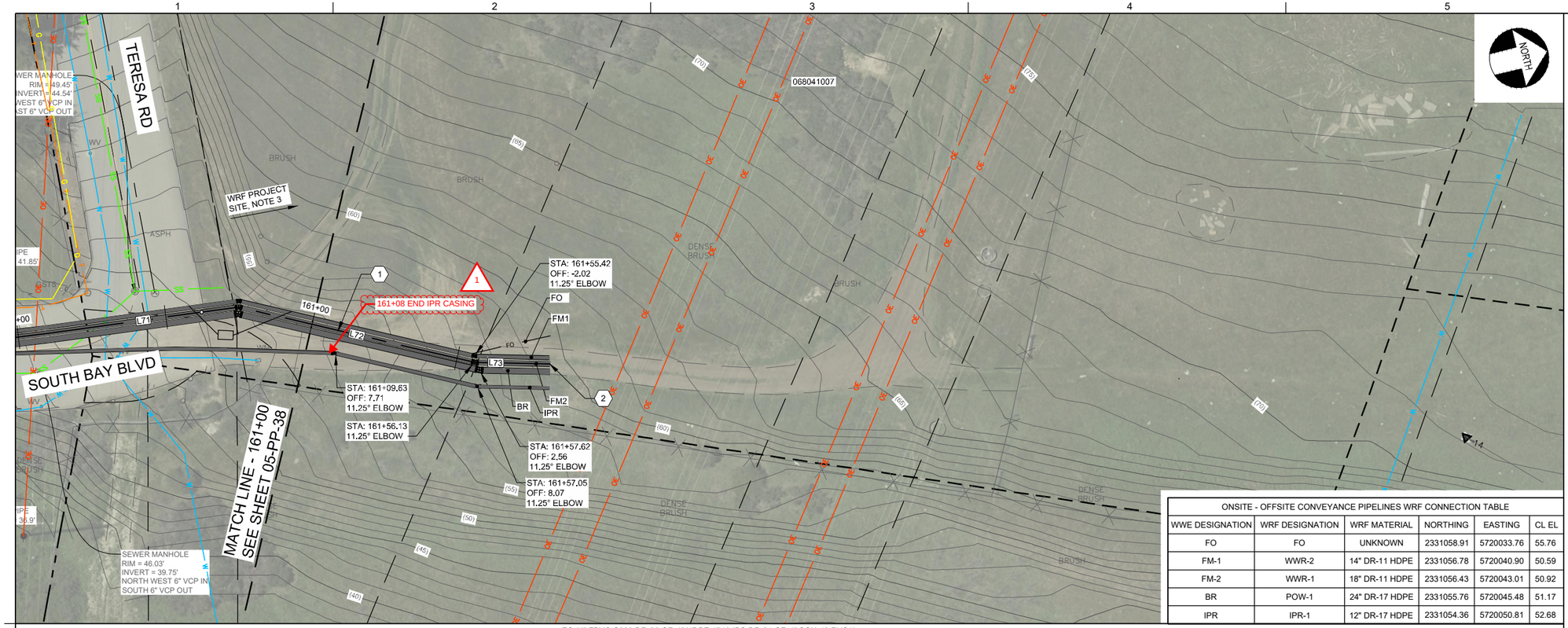

ONSITE - OFFSITE CONVEYANCE PIPELINES WRF CONNECTION TABLE					
WWE DESIGNATION	WRF DESIGNATION	WRF MATERIAL	NORTHING	EASTING	CL EL
FO	FO	UNKNOWN	2331058.91	5720033.76	55.76
FM-1	WWR-2	14" DR-11 HDPE	2331056.78	5720040.90	50.59
FM-2	WWR-1	18" DR-11 HDPE	2331056.43	5720043.01	50.92
BR	POW-1	24" DR-17 HDPE	2331055.76	5720045.48	51.17
IPR	IPR-1	12" DR-17 HDPE	2331054.36	5720050.81	52.68

NOTES:

1. THE CONTRACTOR SHALL COMPLY WITH THE GENERAL CIVIL NOTES AND PERMITTING GENERAL NOTES.
2. HORIZONTAL ALIGNMENT AND PROFILE VERTICAL CURVES HEREIN ARE DESIGNED WITH THE MIN BENDING RADIUS OF THE LARGEST PIPELINE ASSUMING FPVC IS SELECTED. SMALLER BEND RADII MAY BE FEASIBLE DEPENDING ON THE PIPELINE MATERIAL AND LOCATION. THE CONTRACTOR MAY SUBMIT FOR APPROVAL MINOR HORIZONTAL ALIGNMENT CHANGES AND PROFILE VERTICAL CHANGES SO AS IT REDUCES FIELD CONFLICTS, REDUCES FITTINGS WHERE POSSIBLE, IS NOT ZERO SLOPED, AND DOES NOT RESULT IN A HIGH-SPOT.
3. THE WRF PROJECT SITE IS CURRENTLY IN CONSTRUCTION AND MAY APPEAR SUBSTANTIALLY DIFFERENT THAN WHAT IS DEPICTED IN THE DESIGN DRAWING ORTHOIMAGERY. CONSTRUCTION ACCESS LIMITS AND OTHER ITEMS SUCH AS ACCESSIBILITY AND LAYDOWN CONSTRAINTS SHALL BE PROVIDED BY THE CONSTRUCTION MANAGER AFTER PROJECT COMMENCEMENT IN COORDINATION WITH WRF CONSTRUCTION ACTIVITIES.

CONSTRUCTION KEY NOTES:

1. INSTALL WRF OFFSITE PIPELINES, VALVES, AND APPURTENANCES PER HORIZONTAL PLAN AND VERTICAL PROFILE. ALIGNMENT IS CL OF FM2 UNLESS OTHERWISE NOTED. ORDER, PLACEMENT, AND REQUIRED CLEARANCES SHALL BE DETERMINED PER SPECIFIED TRENCH DETAIL UNDER PROFILE. SIZE & CLASS OF CARRIER AND/OR CASING PIPE MATERIALS ARE LISTED SCHEMATICALLY ABOVE PROFILE.
2. CONNECT TO WRF ONSITE YARD PIPING AND MATCH HORIZONTAL PLAN AND ELEVATIONS LISTED IN CONNECTION TABLE BELOW. COORDINATE TIE-IN PROCEDURES, TESTING, AND DISINFECTION WITH PROJECT MANAGER. SEE WRF CONNECTION TABLE. FOR FPVC USE (15850). FOR HDPE, USE USE AN APPROPRIATELY SIZED HDPE ECCENTRIC REDUCER WHERE APPLICABLE, AND ENSURE A SMOOTH CONTINUATION OF INNER DIAMETER AND MATCH CROWNS.

FO (4" FPVC C900 DR-25 OR 4" HDPE 4710 IPS DR-21 OR 4" SCH-40 PVC1)
FM1 (12" FPVC C900 DR-25 OR 16" HDPE 4710 IPS DR-11)
FM2 (16" FPVC C900 DR-25 OR 20" HDPE 4710 IPS DR-11)
BR (20" FPVC C900 DR-25 OR 24" HDPE 4710 IPS DR-11)
IPR (10" FPVC C900 DR-25 OR 12" HDPE 4710 DR-11)

IPR (10" FPVC C900 DR-25 OR 12" HDPE 4710 DR-11) IN CASING PER DET 1/05-CD-15 (FILL ANNULUS TYPE 2 LCC)

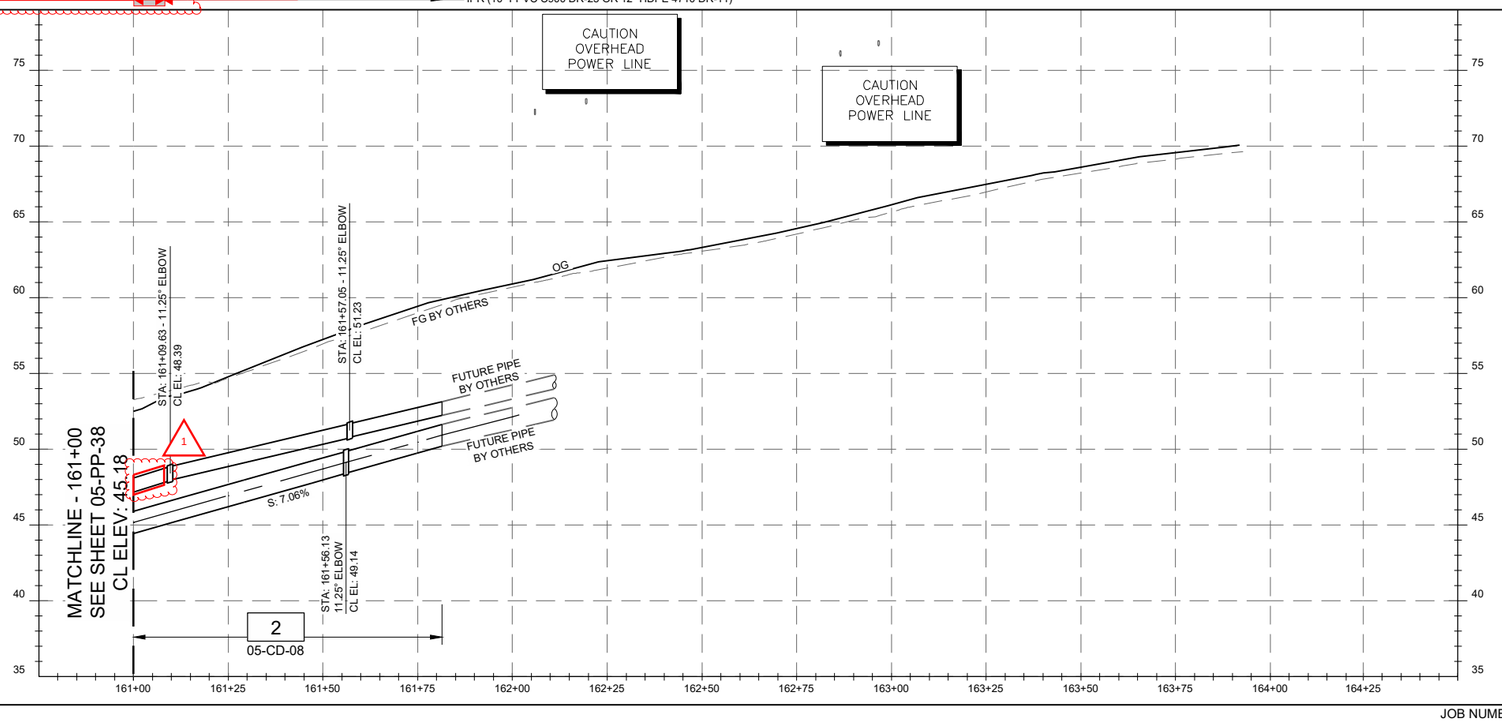

20 0 20 40 FEET
HORIZ SCALE 1"=20'
5 0 5 10 FEET
VERT SCALE 1"=5'

REGISTERED PROFESSIONAL ENGINEER — MICHAEL P. FISHER — No. C61794 — CIVIL — STATE OF CALIFORNIA
05/29/2020

DESIGN P WEBSTER
DRAWN P WEBSTER
CHECKED T LEWIS
APPROVED M FISHER

WATERWORKS ENGINEERS
2260 Douglas Blvd., Suite 105 • Roseville, CA 95661 • 916-780-9888

CITY OF MORRO BAY
WATER RECLAMATION FACILITY
LIFT STATION AND OFFSITE PIPELINES

PLAN AND PROFILE
FORCE MAIN PLAN AND PROFILE
STA 161+00 TO END

DATE MAY 2020
PROJECT NUMBER 17-082
DRAWING NUMBER 05-PP-39
SHEET NUMBER 62

CONFORMED SET - DEC 2020

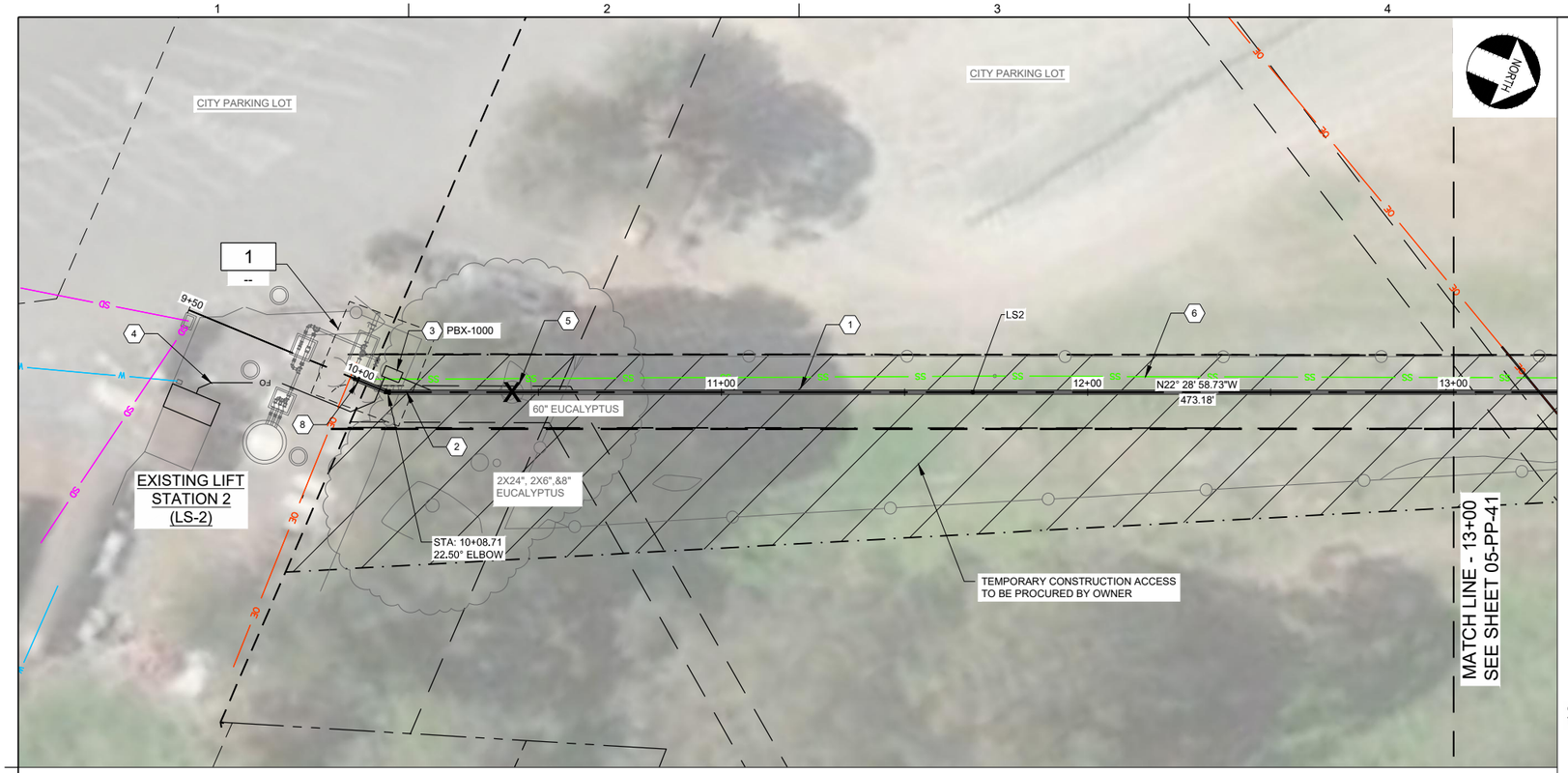

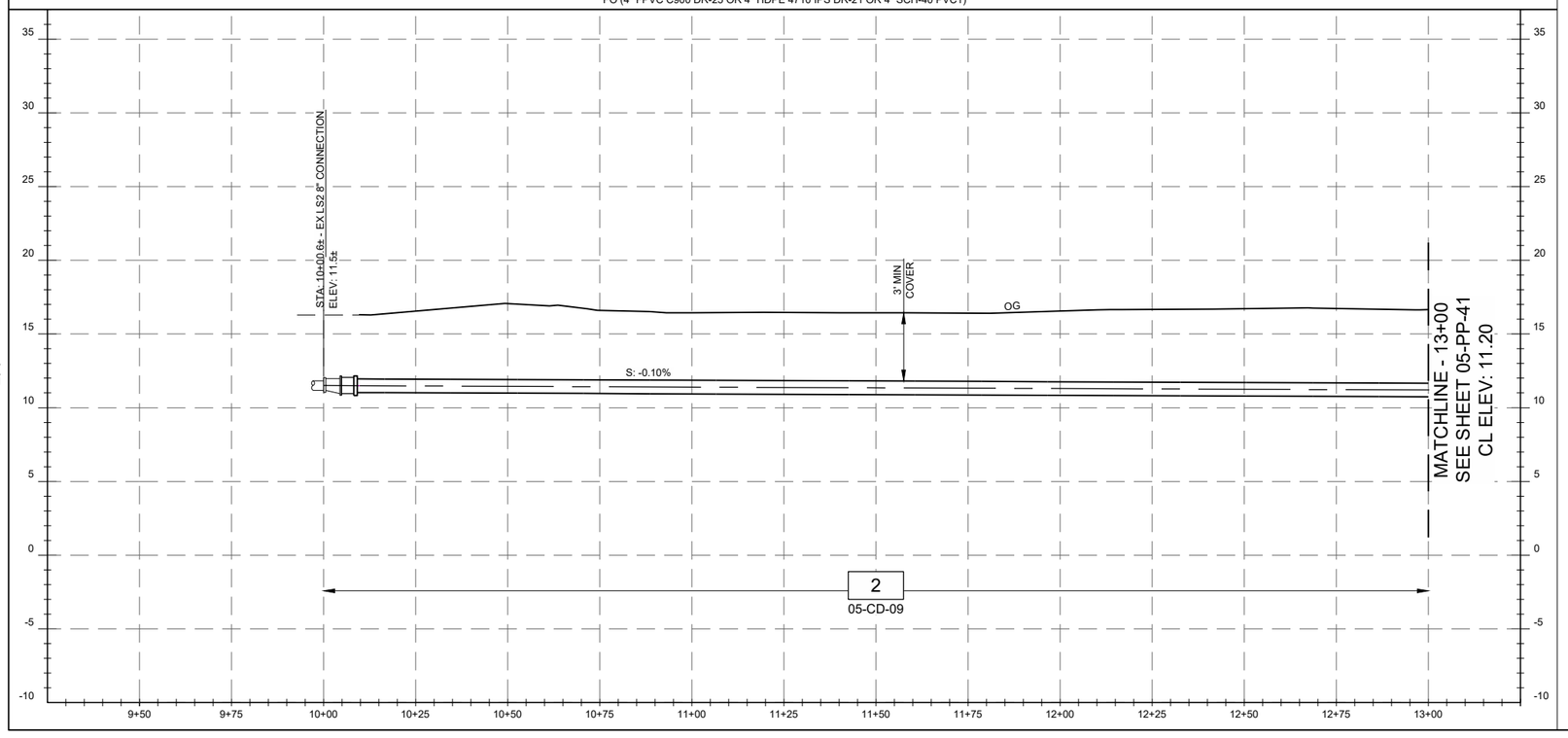

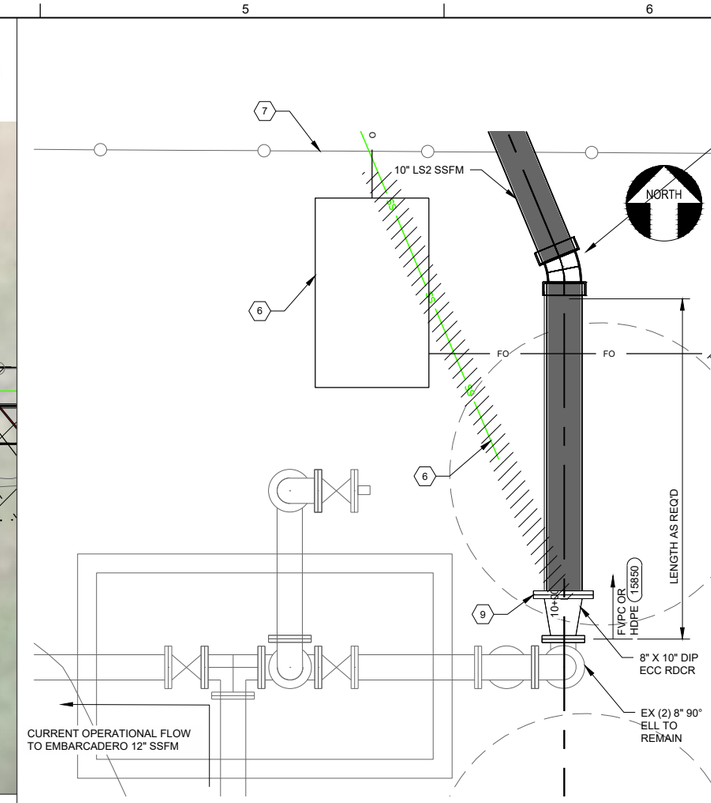

1 CONNECTION DETAIL

- 1/2" = 1'

NOTES:

1. THE CONTRACTOR SHALL COMPLY WITH THE GENERAL CIVIL NOTES AND PERMITTING GENERAL NOTES.
2. HORIZONTAL ALIGNMENT AND PROFILE VERTICAL CURVES HEREIN ARE DESIGNED WITH THE MIN BENDING RADIUS OF THE LARGEST PIPELINE ASSUMING FPVC IS SELECTED. SMALLER BEND RADII MAY BE FEASIBLE DEPENDING ON THE PIPELINE MATERIAL AND LOCATION. THE CONTRACTOR MAY SUBMIT FOR APPROVAL MINOR HORIZONTAL ALIGNMENT CHANGES AND PROFILE VERTICAL CHANGES SO AS IT REDUCES FIELD CONFLICTS, REDUCES FITTINGS WHERE POSSIBLE, IS NOT ZERO SLOPED, AND DOES NOT RESULT IN A HIGH-SPOT.
3. CONTRACTOR SHALL PREPARE, SUBMIT FOR REVIEW, AND IMPLEMENT A SITE SECURITY PLAN WHEREBY THE VISTRA PRIVATE PROPERTY SHALL BE SECURED AT ALL TIMES VIA TEMPORARY FENCING AT THE LIMITS OF THE TEMPORARY CONSTRUCTION EASEMENT.

CONSTRUCTION KEY NOTES:

1. INSTALL LS-2 SSFM, VALVES, AND APPURTENANCES PER HORIZONTAL PLAN AND VERTICAL PROFILE. ALIGNMENT IS CL OF LS2 UNLESS OTHERWISE NOTED. TRENCH DETAIL IS SPECIFICED UNDER PROFILE.
2. INSTALL TRACER WIRE TERMINAL 2060 AND GROUND ROD 16410
3. INSTALL FIBER PULLBOX PER DWG 00-E-04/VLT SIZE S534.
4. INSTALL FO PER 1/05-CD-09. UTILIZE CLOSE PROXIMITY UTILITY CROSSING MITIGATION 2210 2055 WHERE REQ'D. RESTORE PAVEMENT W/ 4" CONC.
5. REMOVE TREE
6. 8" ACP SSFM FROM LS-2 TO BE ABANDONED AND FILLED WITH TYPE 2 LCC OR DEMOLISHED AS NEEDED.
7. TEMPORARILY STOW AND REUSE CHAIN LINK FENCE.
8. HIGH PRIORITY UTILITY VERIFICATION REQUIRED.
9. REMOVE EXISTING 8" GATE VALVE AND 8" X 10" REDUCER.

20 0 20 40 FEET
HORIZ SCALE 1"=20'

5 0 5 10 FEET
VERT SCALE 1"=5'

REGISTERED PROFESSIONAL ENGINEER
MICHAEL A. FISHER
No. C67194
CIVIL
STATE OF CALIFORNIA
05/29/2020

DESIGN P WEBSTER
DRAWN P WEBSTER
CHECKED T LEWIS
APPROVED M FISHER

WATERWORKS ENGINEERS
2260 Douglas Blvd, Suite 105 • Roseville, CA 95661 • 916-780-2888

CITY OF MORRO BAY
WATER RECLAMATION FACILITY
LIFT STATION AND OFFSITE PIPELINES

PLAN AND PROFILE
LS-2 FORCE MAIN PLAN AND PROFILE
BEG TO STA 13+00

DATE MAY 2020
PROJECT NUMBER 17-082
DRAWING NUMBER 05-PP-40
SHEET NUMBER 63

L:\CAD\PROJECTS\17-082 MORRO BAY PS AND PIPELINE_{S}\PROJECT FILES\DELIVERABLES\1782D-05PP140.DWG

JOB NUMBER: 17-082 FILENAME: 1782D-05PP140.DWG PLOT DATE: 05/26/20 PLOT TIME: 12:50:51

CONFORMED SET - DEC 2020

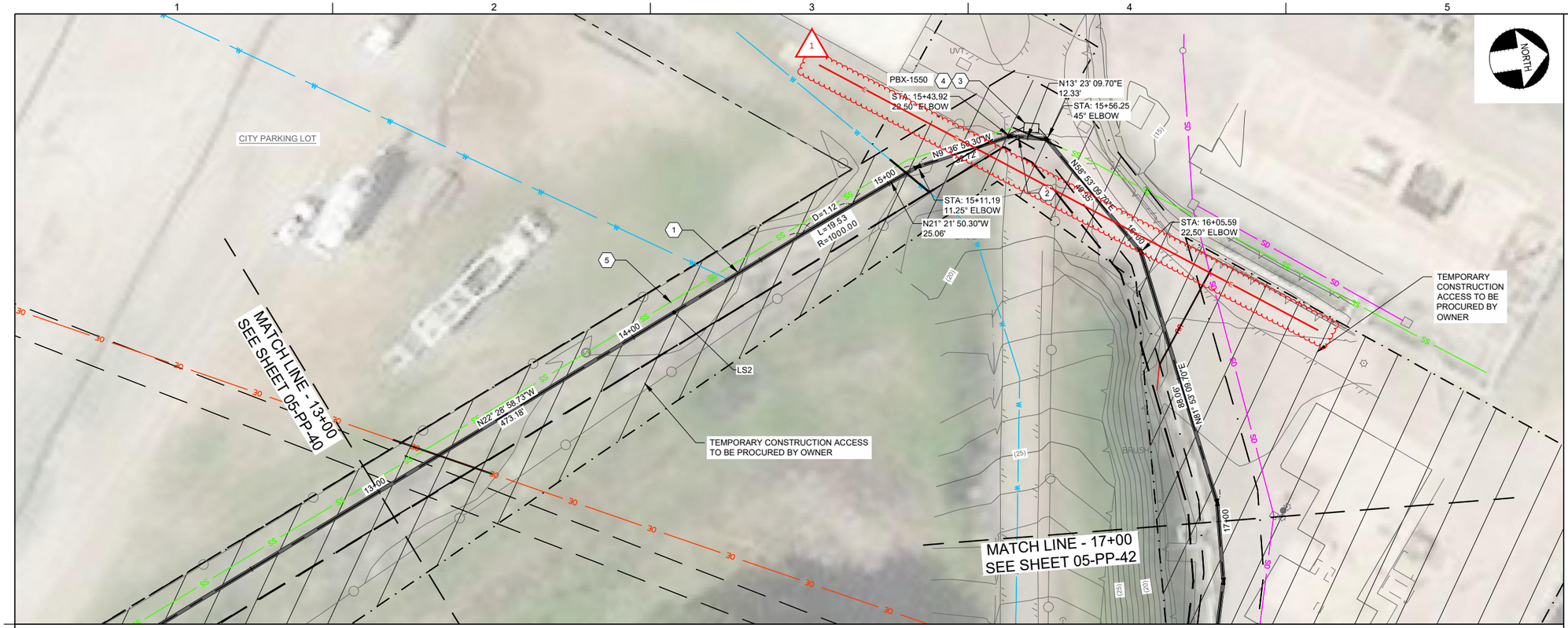

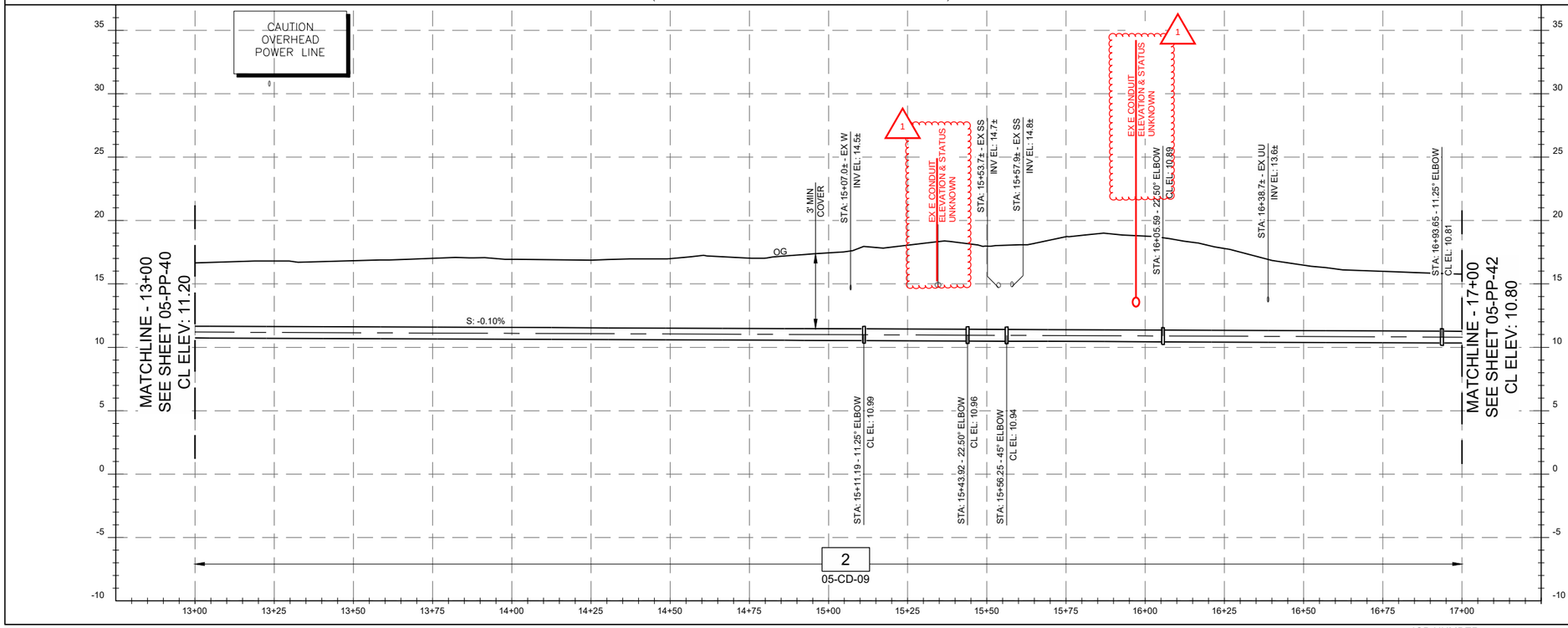

NOTES:

1. THE CONTRACTOR SHALL COMPLY WITH THE GENERAL CIVIL NOTES AND PERMITTING GENERAL NOTES.
2. HORIZONTAL ALIGNMENT AND PROFILE VERTICAL CURVES HEREIN ARE DESIGNED WITH THE MIN BENDING RADIUS OF THE LARGEST PIPELINE ASSUMING FPVC IS SELECTED. SMALLER BEND RADII MAY BE FEASIBLE DEPENDING ON THE PIPELINE MATERIAL AND LOCATION. THE CONTRACTOR MAY SUBMIT FOR APPROVAL MINOR HORIZONTAL ALIGNMENT CHANGES AND PROFILE VERTICAL CHANGES SO AS IT REDUCES FIELD CONFLICTS, REDUCES FITTINGS WHERE POSSIBLE, IS NOT ZERO SLOPED, AND DOES NOT RESULT IN A HIGH-SPOT.
3. CONTRACTOR SHALL PREPARE, SUBMIT FOR REVIEW, AND IMPLEMENT A SITE SECURITY PLAN WHEREBY THE VISTRA PRIVATE PROPERTY SHALL BE SECURED AT ALL TIMES VIA TEMPORARY FENCING AT THE LIMITS OF THE TEMPORARY CONSTRUCTION EASEMENT.
4. UNMARKED PRIVATE UTILITIES ARE LOCATED ON THE VISTRA PROPERTY AND MAY CROSS THE ALIGNMENT. THE CONTRACTOR SHALL COORDINATE WITH THE PROPERTY OWNER TO IDENTIFY THESE UTILITIES.

CONSTRUCTION KEY NOTES:

1. INSTALL LS2 SSFM, VALVES, AND APPURTENANCES PER HORIZONTAL PLAN AND VERTICAL PROFILE. ALIGNMENT IS CL OF LS2 UNLESS OTHERWISE NOTED. TRENCH DETAIL IS SPECIFICED UNDER PROFILE.
2. INSTALL TRACER WIRE TERMINAL (2060)
3. INSTALL FIBER PULLBOX PER DWG 00-E-04/VLT SIZE S534.
4. INSTALL FO PER 1/05-CD-09.
5. 8" ACP SSFM FROM LS-2 TO BE ABANDONED AND FILLED WITH TYPE 2 LCC OR DEMOLISHED AS NEEDED.

20 0 20 40 FEET
HORIZ SCALE 1"=20'

5 0 5 10 FEET
VERT SCALE 1"=5'

REGISTERED PROFESSIONAL ENGINEER
THOMAS E. FISHER
No. C61194
CIVIL
STATE OF CALIFORNIA
05/29/2020

DESIGN	P WEBSTER
DRAWN	P WEBSTER
CHECKED	T LEWIS
APPROVED	M FISHER

WATERWORKS ENGINEERS
2260 Douglas Blvd, Suite 100 • Roseville, CA 95661 • 916-780-2888

CITY OF MORRO BAY
WATER RECLAMATION FACILITY
LIFT STATION AND OFFSITE PIPELINES

PLAN AND PROFILE
LS-2 FORCE MAIN PLAN AND PROFILE
STA 13+00 TO STA 17+00

DATE	MAY 2020
PROJECT NUMBER	17-082
DRAWING NUMBER	05-PP-41
SHEET NUMBER	64

L:\CAD\PROJECTS\17-082 MORRO BAY PS AND PIPELINE_(S)\PROJECT FILES\DELIVERABLES\1782D-05PP141.DWG

JOB NUMBER: 17-082 FILENAME: 1782D-05PP141.DWG PLOT DATE: 08/3/20 PLOT TIME: 15:58:39

CONFORMED SET - DEC 2020

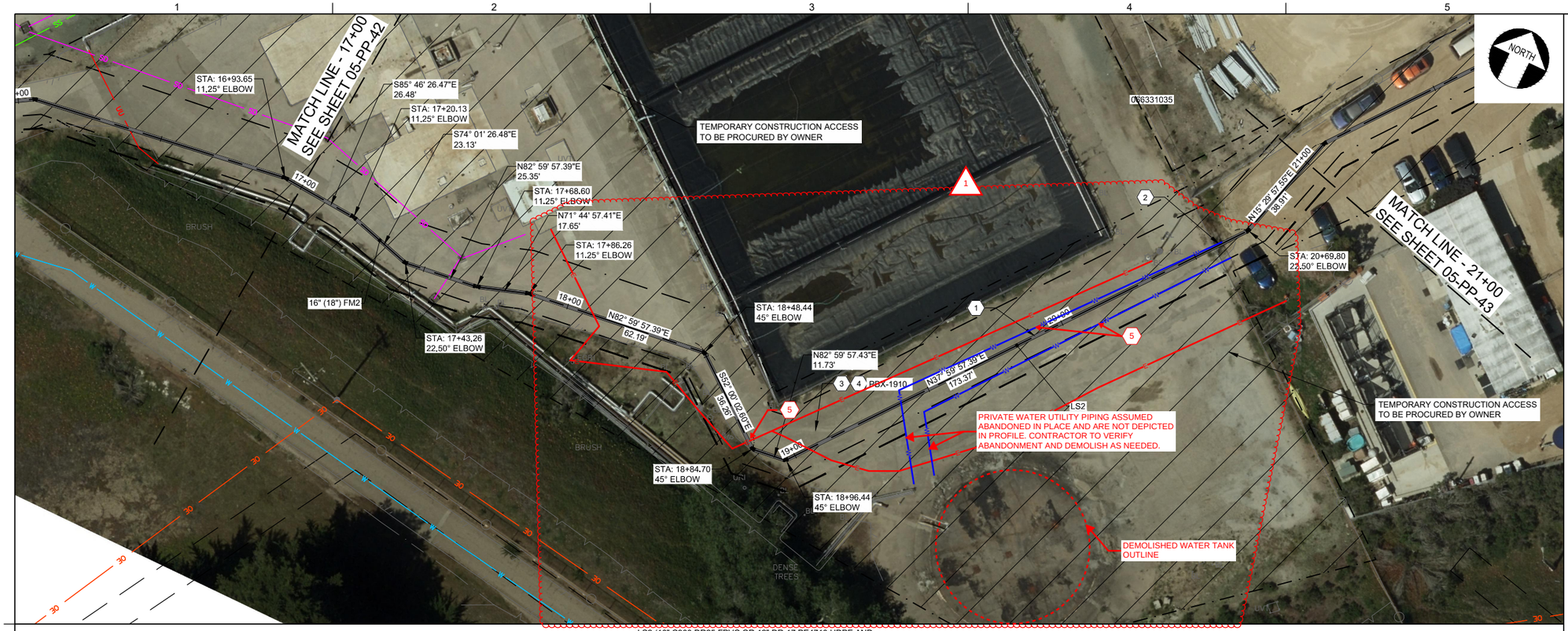

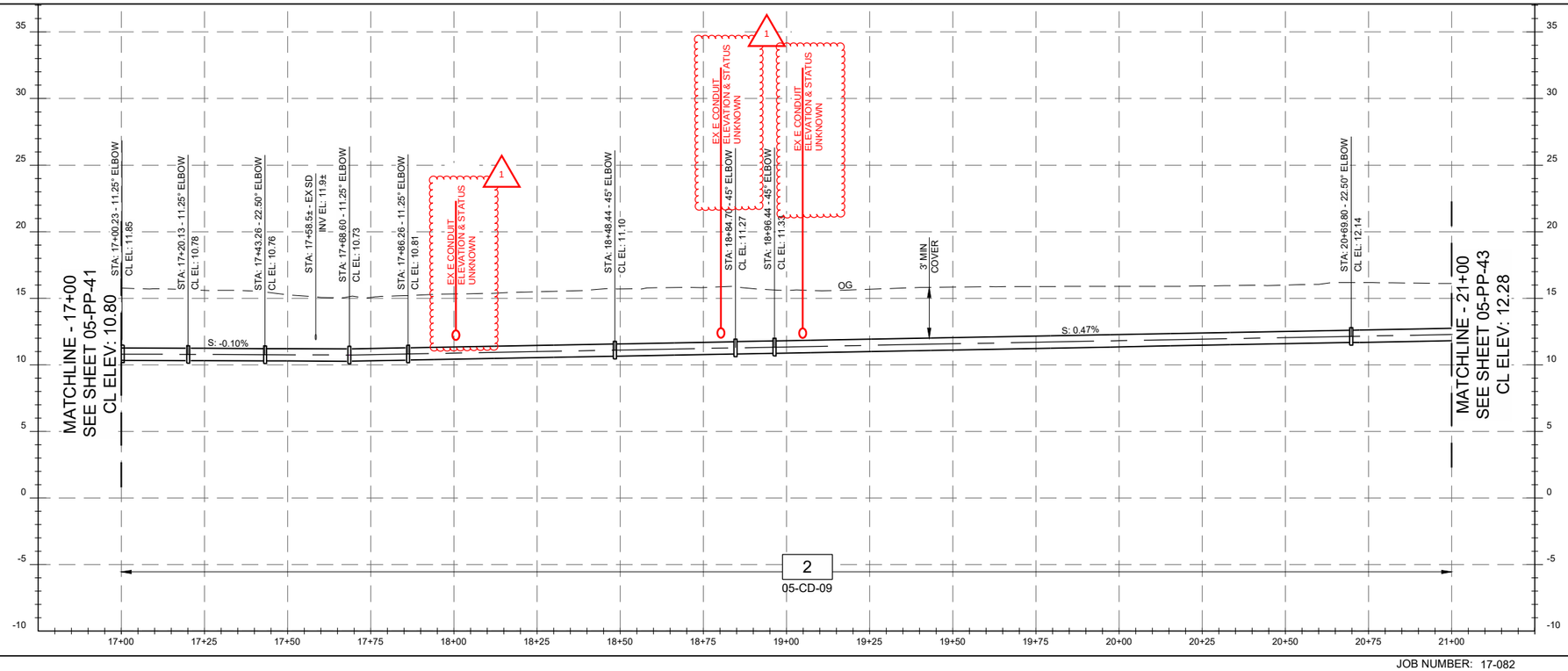

NOTES:

1. THE CONTRACTOR SHALL COMPLY WITH THE GENERAL CIVIL NOTES AND PERMITTING GENERAL NOTES.
2. HORIZONTAL ALIGNMENT AND PROFILE VERTICAL CURVES HEREIN ARE DESIGNED WITH THE MIN BENDING RADIUS OF THE LARGEST PIPELINE ASSUMING FPVC IS SELECTED. SMALLER BEND RADII MAY BE FEASIBLE DEPENDING ON THE PIPELINE MATERIAL AND LOCATION. THE CONTRACTOR MAY SUBMIT FOR APPROVAL MINOR HORIZONTAL ALIGNMENT CHANGES AND PROFILE VERTICAL CHANGES SO AS IT REDUCES FIELD CONFLICTS, REDUCES FITTINGS WHERE POSSIBLE, IS NOT ZERO SLOPED, AND DOES NOT RESULT IN A HIGH-SPOT.
3. CONTRACTOR SHALL PREPARE, SUBMIT FOR REVIEW, AND IMPLEMENT A SITE SECURITY PLAN WHEREBY THE VISTRA PRIVATE PROPERTY SHALL BE SECURED AT ALL TIMES VIA TEMPORARY FENCING AT THE LIMITS OF THE TEMPORARY CONSTRUCTION EASEMENT.
4. UNMARKED PRIVATE UTILITIES ARE LOCATED ON THE VISTRA PROPERTY AND MAY CROSS THE ALIGNMENT. THE CONTRACTOR SHALL COORDINATE WITH THE PROPERTY OWNER TO IDENTIFY THESE UTILITIES.

CONSTRUCTION KEY NOTES:

1. INSTALL LS2 SSFM, VALVES, AND APPURTENANCES PER HORIZONTAL PLAN AND VERTICAL PROFILE. ALIGNMENT IS CL OF LS2 UNLESS OTHERWISE NOTED. TRENCH DETAIL IS SPECIFICED UNDER PROFILE.
2. INSTALL TRACER WIRE TERMINAL (2060)
3. INSTALL FIBER PULLBOX PER DWG 00-E-04/VLT SIZE S534.
4. INSTALL FO PER 1/05-CD-09.
5. HIGH PRIORITY UTILITY VERIFICATION, TYP OF 3.

20 0 20 40 FEET
HORIZ SCALE 1"=20'

5 0 5 10 FEET
VERT SCALE 1"=5'



05/29/2020

DESIGN	P WEBSTER
DRAWN	P WEBSTER
CHECKED	T LEWIS
APPROVED	M FISHER

WATERWORKS ENGINEERS
2260 Douglas Blvd, Suite 103 • Roseville, CA 95661 • 916-780-2888

CITY OF MORRO BAY
WATER RECLAMATION FACILITY
LIFT STATION AND OFFSITE PIPELINES

PLAN AND PROFILE
LS-2 FORCE MAIN PLAN AND PROFILE
STA 17+00 TO STA 21+00

DATE	MAY 2020
PROJECT NUMBER	17-082
DRAWING NUMBER	05-PP-42
SHEET NUMBER	65

L:\CAD\PROJECTS\17-082 MORRO BAY PS AND PIPELINE_(S)\PROJECT FILES\DELIVERABLES\1782D-05PP142.DWG

CONFORMED SET - DEC 2020

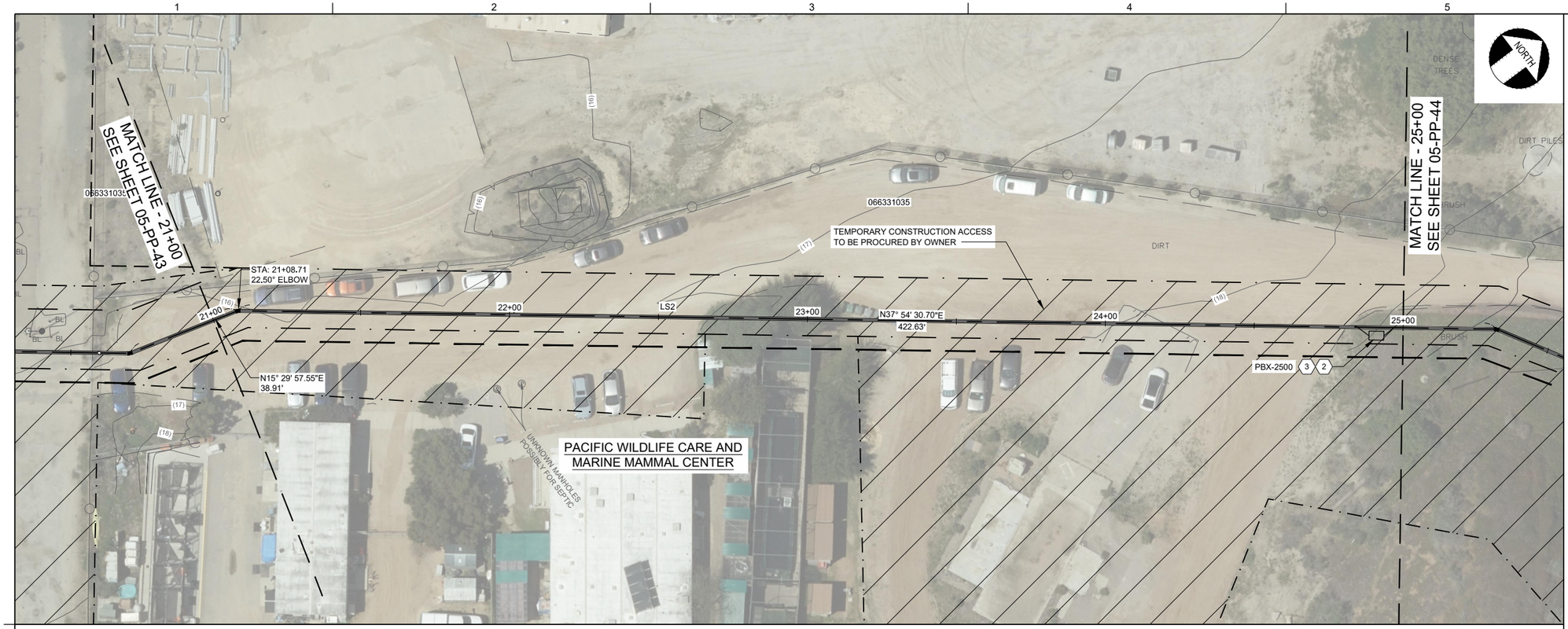

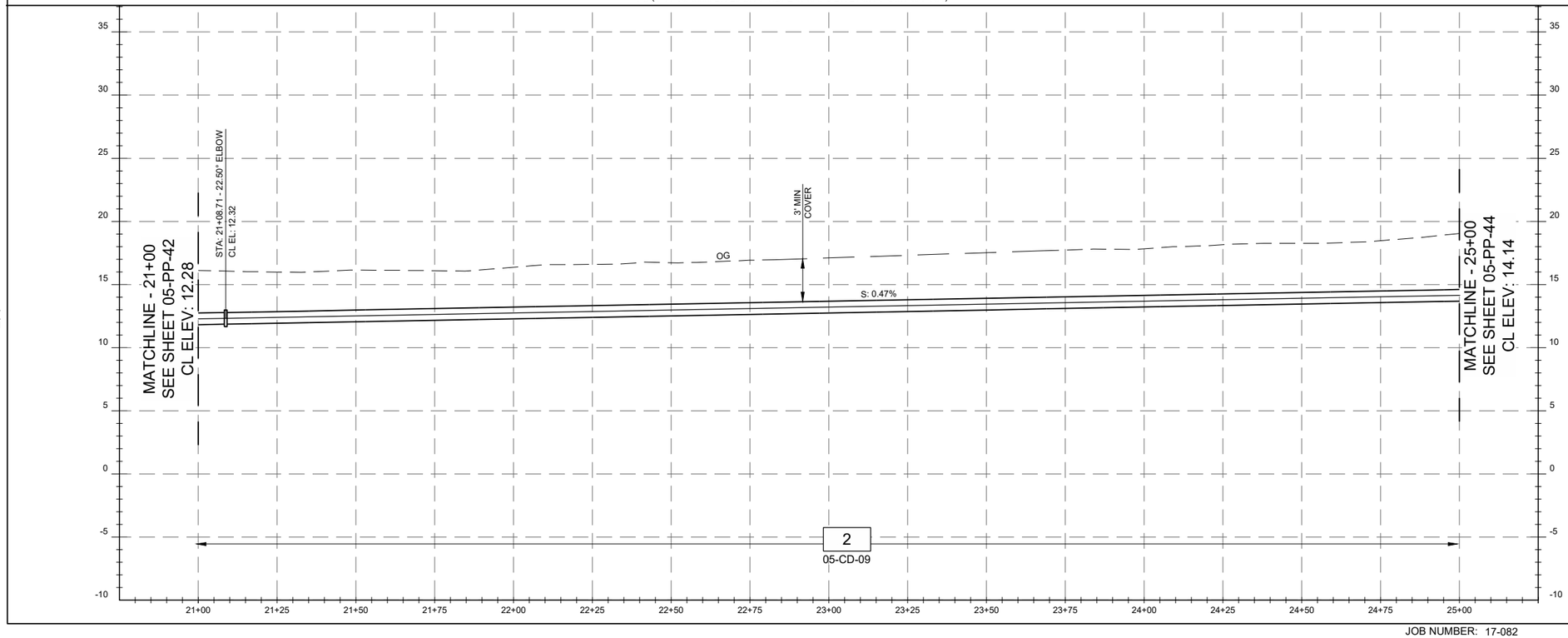

L:\CAD\PROJECTS\17-082 MORRO BAY PS AND PIPELINE_(S)\PROJECT FILES\DELIVERABLES\1782D-05PP143.DWG

NOTES:

1. THE CONTRACTOR SHALL COMPLY WITH THE GENERAL CIVIL NOTES AND PERMITTING GENERAL NOTES.
2. HORIZONTAL ALIGNMENT AND PROFILE VERTICAL CURVES HEREIN ARE DESIGNED WITH THE MIN BENDING RADIUS OF THE LARGEST PIPELINE ASSUMING FPVC IS SELECTED. SMALLER BEND RADII MAY BE FEASIBLE DEPENDING ON THE PIPELINE MATERIAL AND LOCATION. THE CONTRACTOR MAY SUBMIT FOR APPROVAL MINOR HORIZONTAL ALIGNMENT CHANGES AND PROFILE VERTICAL CHANGES SO AS IT REDUCES FIELD CONFLICTS, REDUCES FITTINGS WHERE POSSIBLE, IS NOT ZERO SLOPED, AND DOES NOT RESULT IN A HIGH-SPOT.
3. CONTRACTOR SHALL PREPARE, SUBMIT FOR REVIEW, AND IMPLEMENT A SITE SECURITY PLAN WHEREBY THE VISTRA PRIVATE PROPERTY SHALL BE SECURED AT ALL TIMES VIA TEMPORARY FENCING AT THE LIMITS OF THE TEMPORARY CONSTRUCTION EASEMENT.
4. UNMARKED PRIVATE UTILITIES ARE LOCATED ON THE VISTRA PROPERTY AND MAY CROSS THE ALIGNMENT. THE CONTRACTOR SHALL COORDINATE WITH THE PROPERTY OWNER TO IDENTIFY THESE UTILITIES.

CONSTRUCTION KEY NOTES:

1. INSTALL LS2 SSFM, VALVES, AND APPURTENANCES PER HORIZONTAL PLAN AND VERTICAL PROFILE. ALIGNMENT IS CL OF LS2 UNLESS OTHERWISE NOTED. TRENCH DETAIL IS SPECIFICED UNDER PROFILE.
2. INSTALL FIBER PULLBOX PER DWG 00-E-04/VLT SIZE S534.
3. INSTALL FO PER 1/05-CD-09.

20 0 20 40 FEET
HORIZ SCALE 1"=20'

5 0 5 10 FEET
VERT SCALE 1"=5'

REGISTERED PROFESSIONAL ENGINEER
MICHAEL P. WEBSTER
No. C67194
CIVIL
STATE OF CALIFORNIA
05/29/2020

DESIGN	P WEBSTER
DRAWN	P WEBSTER
CHECKED	T LEWIS
APPROVED	M FISHER

WATERWORKS ENGINEERS
2380 Douglas Blvd, Suite 100 • Roseville, CA 95661 • 916-780-2888

CITY OF MORRO BAY
WATER RECLAMATION FACILITY
LIFT STATION AND OFFSITE PIPELINES

PLAN AND PROFILE

LS-2 FORCE MAIN PLAN AND PROFILE STA 21+00 TO STA 25+00

DATE	MAY 2020
PROJECT NUMBER	17-082
DRAWING NUMBER	05-PP-43
SHEET NUMBER	66

CONFORMED SET - DEC 2020

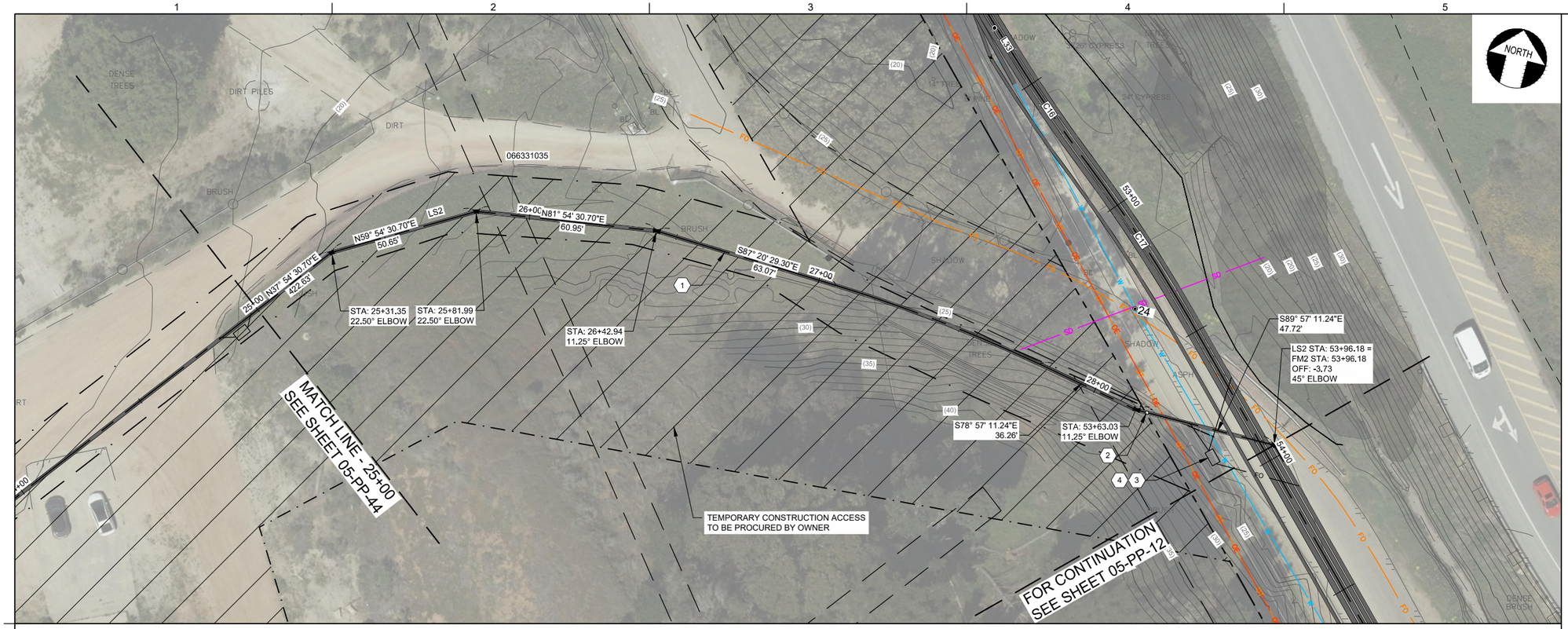

LS2 (10" C900 DR25 FPVC OR 12" DR-17 PE4710 HDPE AND
FO (4" FPVC C900 DR-25 OR 4" HDPE 4710 IPS DR-21 OR 4" SCH-40 PVC1)

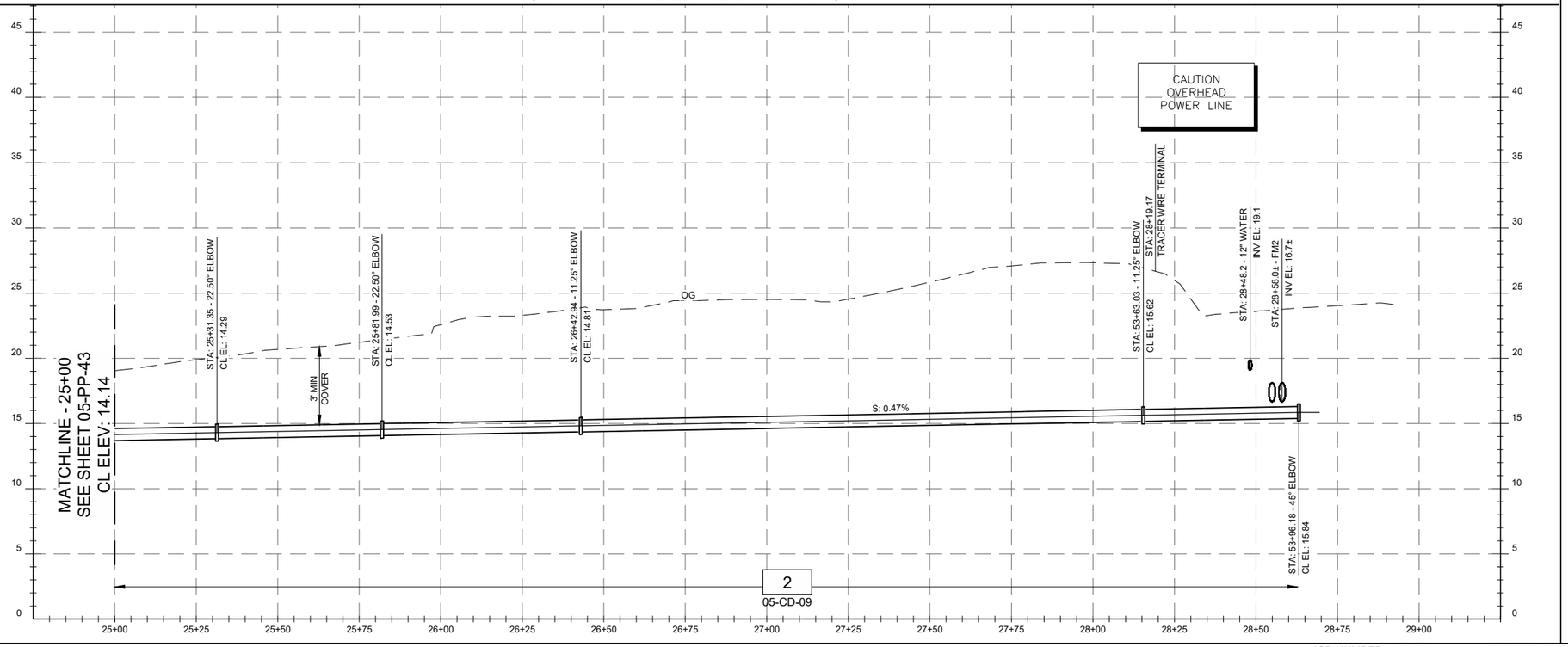

NOTES:

1. THE CONTRACTOR SHALL COMPLY WITH THE GENERAL CIVIL NOTES AND PERMITTING GENERAL NOTES.
2. HORIZONTAL ALIGNMENT AND PROFILE VERTICAL CURVES HEREIN ARE DESIGNED WITH THE MIN BENDING RADIUS OF THE LARGEST PIPELINE ASSUMING FPVC IS SELECTED. SMALLER BEND RADII MAY BE FEASIBLE DEPENDING ON THE PIPELINE MATERIAL AND LOCATION. THE CONTRACTOR MAY SUBMIT FOR APPROVAL MINOR HORIZONTAL ALIGNMENT CHANGES AND PROFILE VERTICAL CHANGES SO AS IT REDUCES FIELD CONFLICTS, REDUCES FITTINGS WHERE POSSIBLE, IS NOT ZERO SLOPED, AND DOES NOT RESULT IN A HIGH-SPOT.
3. CONTRACTOR SHALL PREPARE, SUBMIT FOR REVIEW, AND IMPLEMENT A SITE SECURITY PLAN WHEREBY THE VISTRA PRIVATE PROPERTY SHALL BE SECURED AT ALL TIMES VIA TEMPORARY FENCING AT THE LIMITS OF THE TEMPORARY CONSTRUCTION EASEMENT.
4. UNMARKED PRIVATE UTILITIES ARE LOCATED ON THE VISTRA PROPERTY AND MAY CROSS THE ALIGNMENT. THE CONTRACTOR SHALL COORDINATE WITH THE PROPERTY OWNER TO IDENTIFY THESE UTILITIES.

CONSTRUCTION KEY NOTES:

1. INSTALL LS-2 SSFM, VALVES, AND APPURTENANCES PER HORIZONTAL PLAN AND VERTICAL PROFILE. ALIGNMENT IS CL OF LS2 UNLESS OTHERWISE NOTED. TRENCH DETAIL IS SPECIFICED UNDER PROFILE.
2. INSTALL TRACER WIRE TERMINAL (2060) AND GROUND ROD. (16410)
3. INSTALL FIBER PULLBOX PER DWG 00-E-04/VLTSIZE S534.
4. INSTALL FO PER 1/05-CD-09.

20 0 20 40 FEET
HORIZ SCALE 1"=20'

5 0 5 10 FEET
VERT SCALE 1"=5'

REGISTERED PROFESSIONAL ENGINEER
MICHAEL P. WEBSTER
No. C67194
CIVIL
STATE OF CALIFORNIA
05/29/2020

DESIGN	P WEBSTER
DRAWN	P WEBSTER
CHECKED	T LEWIS
APPROVED	M FISHER

WATERWORKS ENGINEERS
2360 Douglas Blvd, Suite 100 • Roseville, CA 95661 • 916-780-2888

CITY OF MORRO BAY
WATER RECLAMATION FACILITY
LIFT STATION AND OFFSITE PIPELINES

PLAN AND PROFILE
LS-2 FORCE MAIN PLAN AND PROFILE
STA 25+00 TO END

DATE	MAY 2020
PROJECT NUMBER	17-082
DRAWING NUMBER	05-PP-44
SHEET NUMBER	67

L:\CAD\PROJECTS\17-082 MORRO BAY PS AND PIPELINE_(S)\PROJECT FILES\DELIVERABLES\1782D-05PP144.DWG

CONFORMED SET - DEC 2020

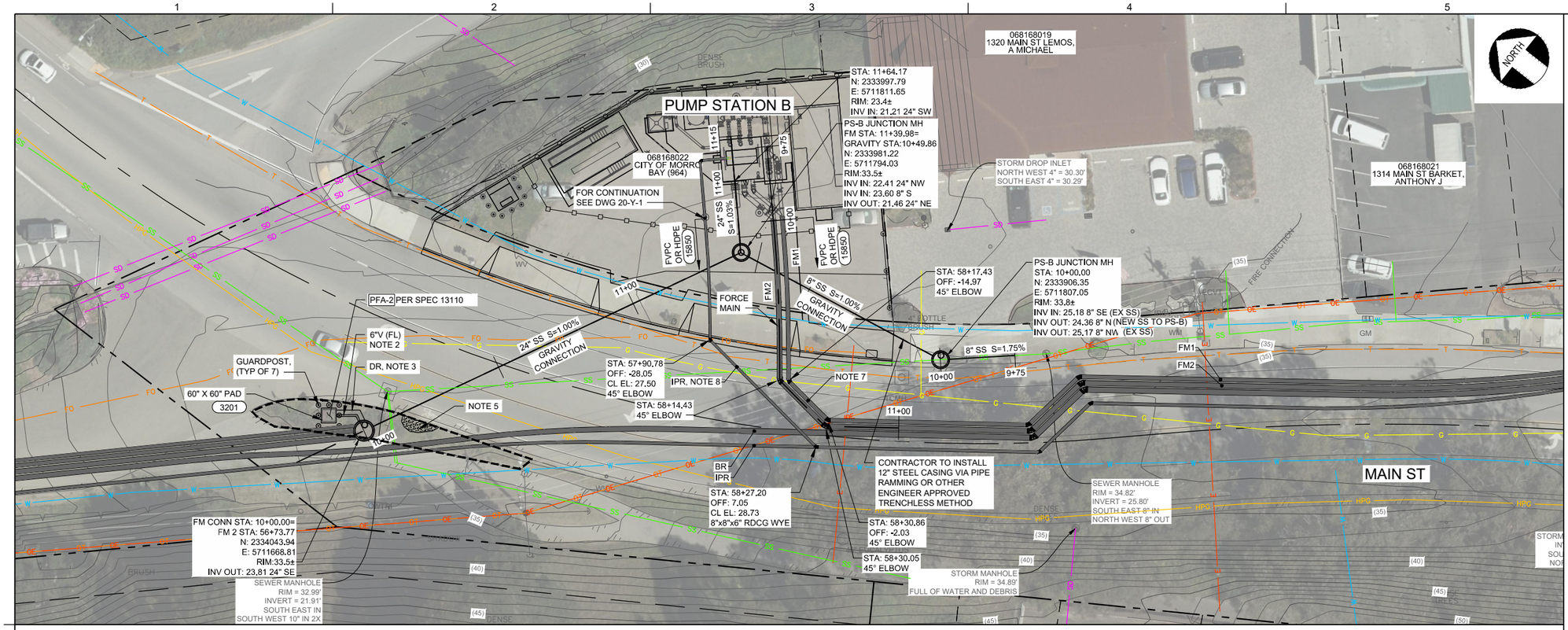

NOTES:

1. SEE DWG 20-Y-1 FOR PUMP STATION B YARD PIPING PLAN AND DETAILS.
2. CONTRACTOR TO CONNECT 6"V (FL) TO OUTDOOR PASSIVE ODOR CONTROL SYSTEM PER MANUFACTURER'S RECOMMENDATION.
3. CONTRACTOR TO INSTALL SMALL DIAMETER DRAIN FROM OUTDOOR PASSIVE ODOR CONTROL SYSTEM PER MANUFACTURER'S RECOMMENDATION.
4. THE CONTRACTOR SHALL COMPLY WITH THE GENERAL CIVIL NOTES AND PERMITTING GENERAL NOTES.
5. RESTORE 780-SF LANDSCAPING AND MATCH PRE-CONSTRUCTION CONDITIONS.
6. CONSTRUCT GRAVITY SS PIPELINES PER TRENCH DETAIL 3/05-CD-09.
7. CONSTRUCT DUAL FM-1 AND FM-2 PER TRENCH DETAIL 2/05-CD-05. REFERENCE PLAN AND PROFILE FOR MATERIAL SIZE AND CLASS.
8. 6" FPVC C900 DR-25 OR 8" HDPE 4710 DR-17. 50-LF CASING PER DET 1/05-CD-15 FROM WYE TO SIDEWALK. INSTALL PER TRENCH DETAIL 2/05-CD-09.
9. HPG CROSSING. CONTRACTOR TO SUBMIT PIPE SUPPORT PLAN TO CONSTRUCTION MANAGER AND SOCAL GAS.
10. ACTIVE TEMPORARY SEWER BYPASS PUMPING ANTICIPATED FOR 8" GRAVITY CONNECTION DIVERSIONS. CONTRACTOR SHALL SUBMIT BYPASS PUMPING PLAN IN ACCORDANCE WITH SPEC 01550.

24" GRAVITY CONNECTION

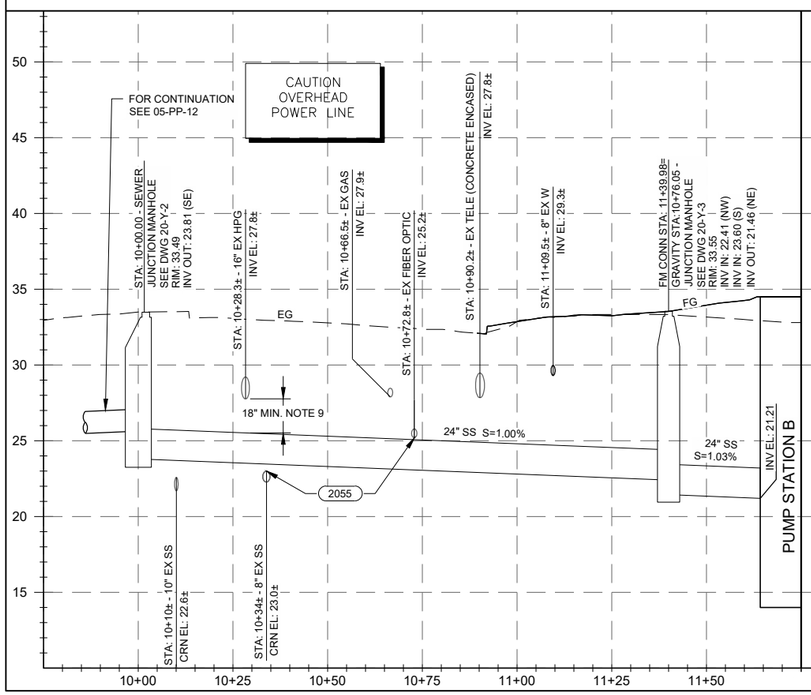

8" GRAVITY CONNECTION

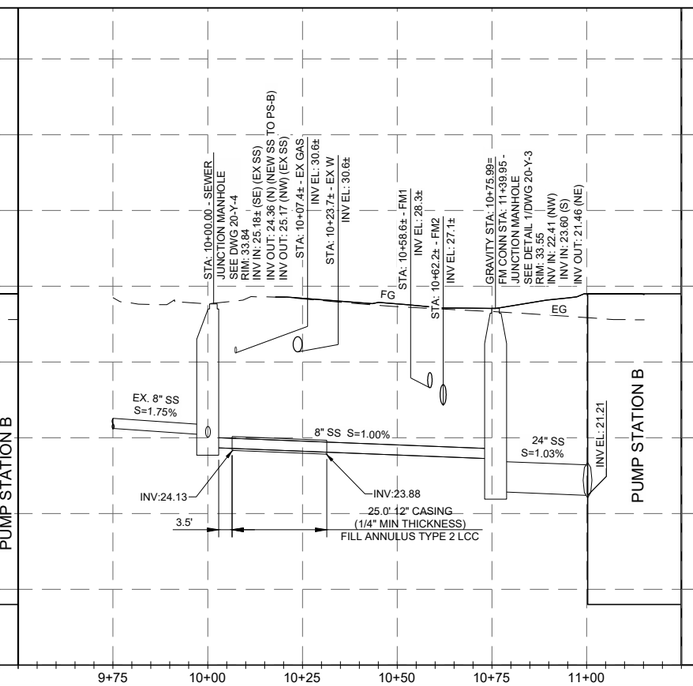

FORCE MAIN

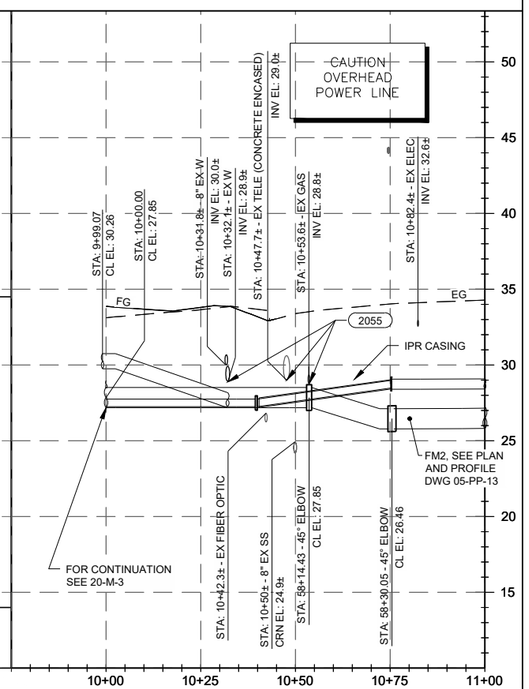

20 0 20 40 FEET
HORIZ SCALE 1"=20'

5 0 5 10 FEET
VERT SCALE 1"=5'

REGISTERED PROFESSIONAL ENGINEER
No. C067194
CIVIL
STATE OF CALIFORNIA
05/29/2020

DESIGN	P WEBSTER
DRAWN	P WEBSTER
CHECKED	T LEWIS
APPROVED	M FISHER

WATERWORKS ENGINEERS
2260 Douglas Blvd, Suite 105 • Roseville, CA 95661 • 916-780-2888

CITY OF MORRO BAY

WATER RECLAMATION FACILITY
LIFT STATION AND OFFSITE PIPELINES

PLAN AND PROFILE

PS-B SANITARY SEWER

DATE MAY 2020
PROJECT NUMBER 17-082
DRAWING NUMBER 05-PP-45
SHEET NUMBER 68

L:\CAD\PROJECTS\17-082 MORRO BAY PS AND PIPELINE_(S)\PROJECT FILES\DELIVERABLES\1782D-05PP145.DWG

JOB NUMBER: 17-082 FILENAME: 1782D-05PP145.DWG PLOT DATE: 05/26/20 PLOT TIME: 13:43:38

CONFORMED SET - DEC 2020

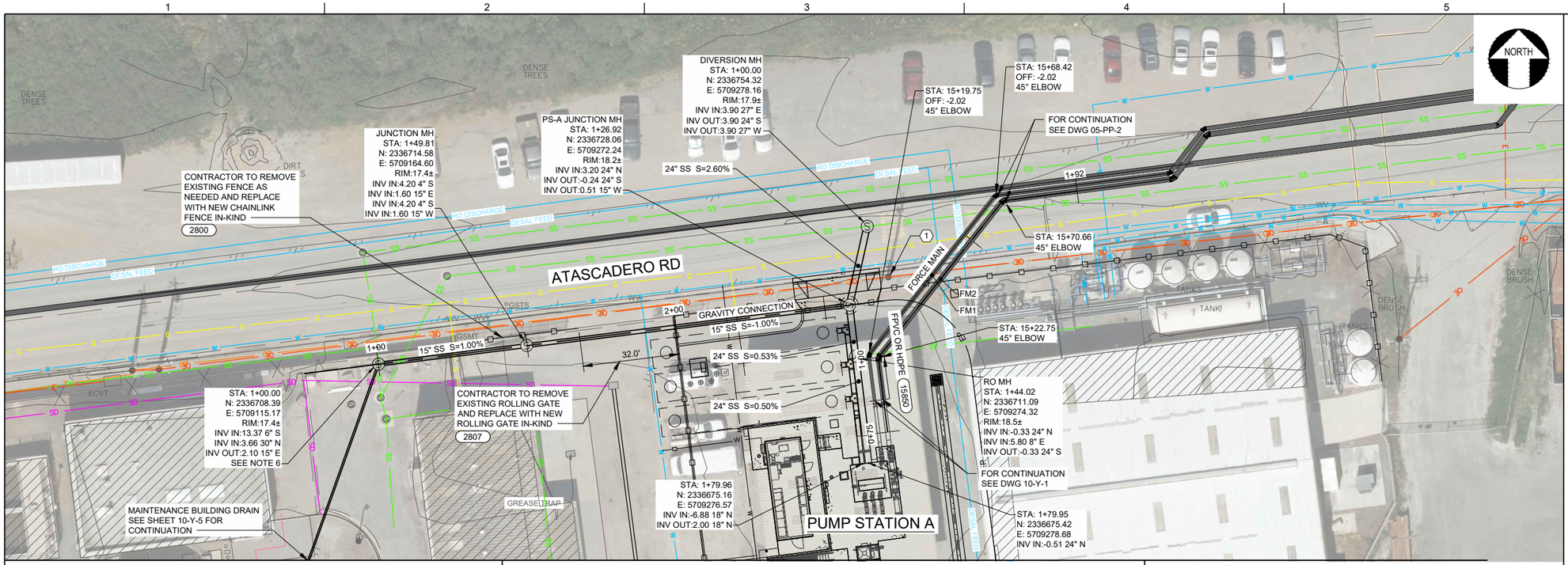

24" GRAVITY CONNECTION

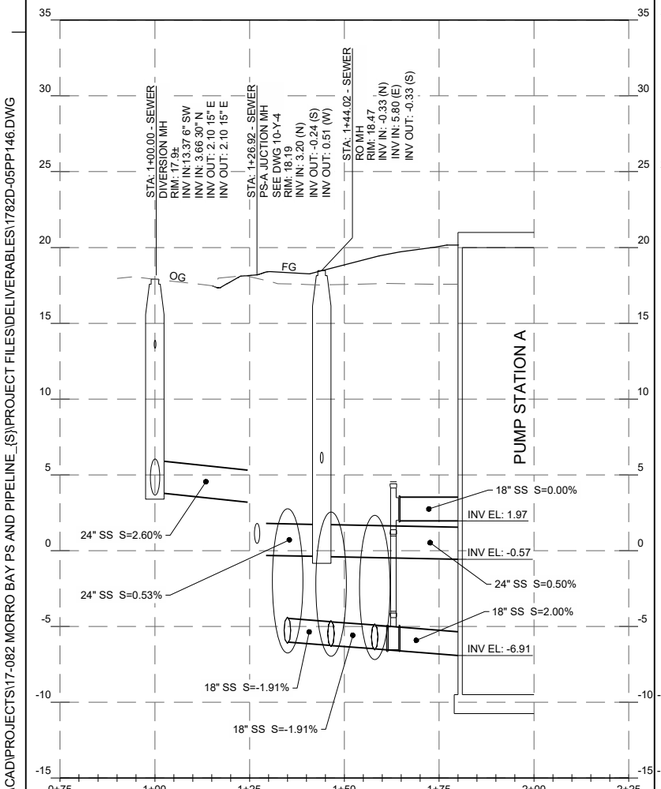

15" GRAVITY CONNECTION

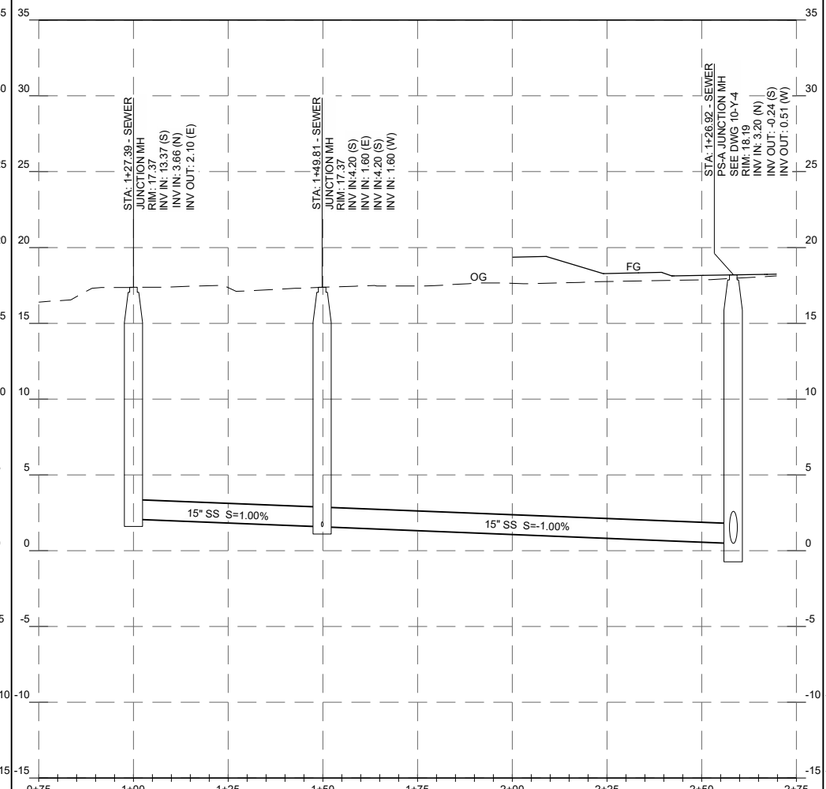

FORCE MAIN

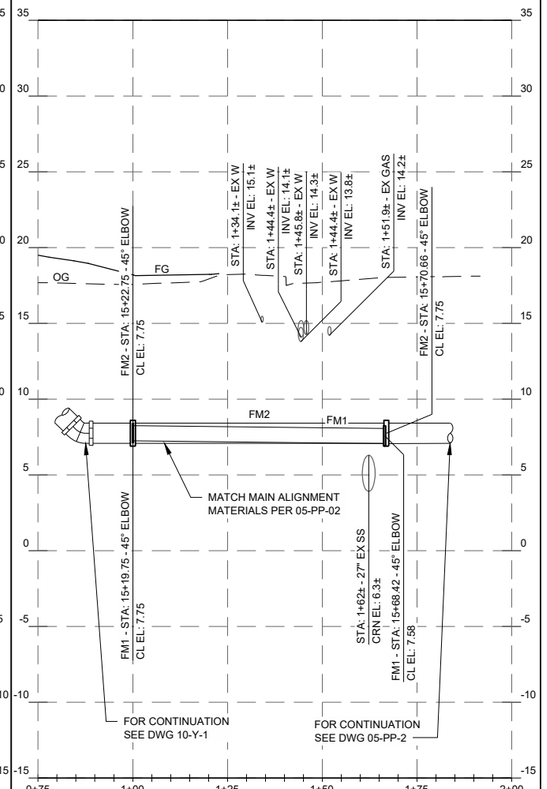

20 0 20 40 FEET
HORIZ SCALE 1"=20'

5 0 5 10 FEET
VERT SCALE 1"=5'

NOTES:

1. SEE DWG 10-Y-1 FOR PUMP STATION A YARD PIPING PLAN AND DETAILS.
2. THE CONTRACTOR SHALL COMPLY WITH THE GENERAL CIVIL NOTES AND PERMITTING GENERAL NOTES.
3. CONSTRUCT GRAVITY SS PIPELINES PER TRENCH DETAIL 3/05-CD-09.
4. CONSTRUCT DUAL FM-1 AND FM-2 PER TRENCH DETAIL 2/05-CD-05. REFERENCE PLAN AND PROFILE FOR MATERIAL SIZE AND CLASS.
5. SEWER MANHOLES SHALL BE PER CITY OF MORRO BAY STANDARD DETAIL S-3 UNLESS OTHERWISE NOTED.
6. CONNECTION TO EXISTING 30" SS SHALL NOT BE MADE UNTIL JUNE 2021.
7. ACTIVE TEMPORARY SEWER BYPASS PUMPING ANTICIPATED FOR 24" AND 15" GRAVITY CONNECTION DIVERSIONS. CONTRACTOR SHALL SUBMIT BYPASS PUMPING PLAN IN ACCORDANCE WITH SPEC 01550.

CONSTRUCTION KEY NOTES:

1. CONTRACTOR TO HOLD EXISTING UTILITY POLE DURING CONSTRUCTION. COORDINATE WITH PGE.

DESIGN	P WEBSTER
DRAWN	P WEBSTER
CHECKED	T LEWIS
APPROVED	M FISHER

WATERWORKS ENGINEERS
2260 Douglas Blvd, Suite 105 • Roseville, CA 95661 • 916-780-2888

CITY OF MORRO BAY
WATER RECLAMATION FACILITY
LIFT STATION AND OFFSITE PIPELINES

PLAN AND PROFILE

PS-A SANITARY SEWER

REGISTERED PROFESSIONAL ENGINEER
MICHAEL P. FISHER
No. C67194
CIVIL
STATE OF CALIFORNIA
05/29/2020

DATE	MAY 2020
PROJECT NUMBER	17-082
DRAWING NUMBER	05-PP-46
SHEET NUMBER	69

CONFORMED SET - DEC 2020



GENERAL NOTES:

1. THESE DRAWINGS PRESENT THE GENERAL TRAFFIC HANDLING APPROACH DEVELOPED BY THE CITY AND ARE NOT INTENDED TO DIRECT THE CONTRACTOR'S MEANS AND METHODS FOR TRAFFIC CONTROL. THE STAGES ARE SHOWN TO GENERALLY DEFINE WORK AREAS THAT MINIMIZE IMPACT TO ADJACENT BUSINESSES AND RESIDENCES AND MAINTAIN ACCESS DURING CONSTRUCTION. THE FOOTPRINT OF THE TRAFFIC CONTROL COMPONENTS AND WORK ZONES DELINEATED HEREIN ARE APPROXIMATE, MAY BE INCOMPLETE, AND MAY EXTEND BEYOND THE LIMITS OF INDIVIDUAL PLAN SHEETS. CONTRACTOR SHALL NOT IMPLEMENT TRAFFIC CONTROL AND PERFORM WORK IN MULTIPLE STAGES WITHOUT PRIOR APPROVAL FROM THE CONSTRUCTION MANAGER. SPECIFIC EXCEPTIONS ARE NOTED ON THE DRAWINGS.
2. THE CONTRACTOR SHALL SUBMIT TRAFFIC CONTROL PLANS PREPARED BY A LICENSED TRAFFIC ENGINEER OR A QUALIFIED TRAFFIC CONTROL CONTRACTOR TO THE CITY OF MORRO BAY AND THE CALIFORNIA DEPARTMENT OF TRANSPORTATION TO ACQUIRE ENCROACHMENT PERMITS AND IMPLEMENT TRAFFIC CONTROL IN CITY AND STATE R/W THAT CONFORM, AT A MINIMUM, WITH CURRENT EDITION MUTCD AND MUTCD CALIFORNIA SUPPLEMENT REQUIREMENTS AND SECTION 12 OF CALTRANS STANDARD SPECIFICATIONS, AND CA ADA REQUIREMENTS. CONTRACTOR SHALL PROVIDE CALTRANS LANE CLOSURE SYSTEM (LCS) COMPLIANCE.
3. CONTRACTOR SHALL WORK IN ONE TRAFFIC HANDLING WORK ZONE AT A TIME, AND CONTRACTOR SHALL BE LIMITED TO ONE (1) WEEK TO TRANSITION BETWEEN CONTIGUOUS TRAFFIC HANDLING WORK ZONES.
4. THE CONTRACTOR SHALL AT ALL TIMES PROVIDE ACCESS FOR EMERGENCY VEHICLES, INCLUDING BUT NOT LIMITED TO PARAMEDICS, FIRE DEPARTMENT, AND LAW ENFORCEMENT.
5. THE TRAFFIC CONTROL PLANS SHALL ACCOMMODATE PUBLIC SERVICES SUCH AS GARBAGE COLLECTION, MAIL/PARCEL DELIVERY, PUBLIC TRANSPORTATION, AND SCHOOL TRAFFIC. THE TRAFFIC CONTROL PLANS SHALL ACCOMMODATE AND DIRECT LOCAL TRAFFIC FOR RESIDENTIAL AND BUSINESS ACCESS WHEN ACCESS IS IMPACTED BY CONSTRUCTION AND ADDRESS SIDEWALK CLOSURES AND PEDESTRIAN ACCESS TO RESIDENCES AND BUSINESSES.
6. THE CITY HAS DESIGNATED A PROGRAM OUTREACH TEAM THAT SHALL FACILITATE AND TRACK ALL COMMUNICATION WITH THE COMMUNITY ON CONSTRUCTION IMPACTS. THE CONTRACTOR SHALL COORDINATE ALL OUTREACH AND COMMUNITY ENGAGEMENT ACTIVITIES THROUGH THE CONSTRUCTION MANAGER AND IN COORDINATION WITH THE PROGRAM OUTREACH TEAM. THE CONSTRUCTION MANAGER WILL ESTABLISH THE COMMUNICATION PLAN BETWEEN THE CONTRACTOR AND PROGRAM OUTREACH TEAM PRIOR TO THE START OF CONSTRUCTION. ALL REFERENCES ON THESE DRAWINGS TO COORDINATION WITH THE CONSTRUCTION MANAGER ARE ASSUMED TO BE IN COORDINATION WITH THE COMMUNICATION PLAN.
7. THE CONTRACTOR SHALL PROVIDE A MINIMUM OF ONE CONTINUOUS INGRESS/EGRESS TO PROPERTIES TO ACCOMMODATE RESIDENTIAL ACCESS AND/OR BUSINESS OPERATIONS DURING BUSINESS HOURS. COORDINATE ALL COMMUNICATION WITH PROPERTY AND BUSINESS OWNERS WITH THE CONSTRUCTION MANAGER. THESE DRAWINGS IDENTIFY PROPERTIES THAT WILL REQUIRE COORDINATION TO ACCOMMODATE LARGE VEHICLES, HIGH TRAFFIC VOLUMES, SINGLE-DIRECTION INGRESS/EGRESS, OR SINGLE ENTRANCES. THE CONTRACTOR IS RESPONSIBLE FOR COORDINATING WITH THE CONSTRUCTION MANAGER AND PROPERTY OWNERS TO PROVIDE FOR ACCESS TO ALL PROPERTIES AFFECTED BY CONSTRUCTION.
8. WORK ACROSS OR IMPEDING SINGLE ACCESS DRIVEWAYS PRIVATE PROPERTIES SHALL BE COMPLETED OUTSIDE OF BUSINESS HOURS FOR THE AFFECTED PROPERTY AND BEFORE 10:00 PM.
9. CONTRACTOR SHALL COORDINATE CONSTRUCTION NOTICES WITH THE CONSTRUCTION MANAGER. IDENTIFY PROPERTIES THAT WILL BE IMPACTED BY CONSTRUCTION IN THE THREE-WEEK LOOKAHEAD TO COORDINATE PROPERTY AND BUSINESS OWNER NOTIFICATIONS. THE PROGRAM OUTREACH TEAM WILL NOTIFY AFFECTED PROPERTIES TWO WEEKS PRIOR TO IMPLEMENTING TRAFFIC CONTROL AS THE WORK PROGRESSES. THE CONTRACTOR SHALL NOTIFY PROPERTY OWNERS, RESIDENTS, AND BUSINESS OWNERS PRIOR TO ANY CONSTRUCTION ACTIVITIES THAT IMPACT INGRESS/EGRESS IN COORDINATION WITH THE CONSTRUCTION MANAGER, AND SUCH NOTIFICATION SHALL BE MADE 7 DAYS PRIOR AND 24 HOURS PRIOR TO CLOSURE OR IMPACT OF INGRESS/EGRESS POINTS. THE PROGRAM OUTREACH TEAM WILL DEVELOP ALL NOTIFICATIONS, AND THE CONTRACTOR SHALL BE RESPONSIBLE FOR PRINTING THE MATERIALS. THE CONTRACTOR SHALL DESIGNATE A LEAD THAT WILL COORDINATE ALL COMMUNICATION WITH THE PUBLIC THROUGH THE CONSTRUCTION MANAGER.
10. SENSITIVE NOISE RECEPTORS SUCH AS MOBILE HOMES, PERMANENT RESIDENCES, HOTELS, AND PLACES OF WORSHIP MAY BE PRESENT ALONG THE WORK CORRIDOR. THE CONTRACTOR SHALL COORDINATE WITH THE CONSTRUCTION MANAGER AND IMPLEMENT CONSTRUCTION NOISE REDUCTION MEASURES/PLAN. CONSTRUCTION WORK WITHIN A CERTAIN MINIMUM DISTANCE FROM SENSITIVE NOISE RECEPTORS MAY BE RESTRICTED DURING OFF-WORK-HOURS.
11. THESE DRAWINGS INCLUDE NOTES SPECIFIC TO EACH STAGE ON EACH SHEET (STAGE SPECIFIC NOTES). THE STAGE SPECIFIC NOTES ARE INTENDED TO IDENTIFY SPECIFIC OR UNIQUE CONDITIONS THAT THE CONTRACTOR SHALL CONSIDER IN PREPARING TRAFFIC CONTROL PLANS. CONTRACTOR SHALL CONFIRM ALL TRAFFIC CONDITIONS TO PREPARE THE TRAFFIC CONTROL PLANS.

REGISTERED PROFESSIONAL ENGINEER
MICHAEL P. WEBSTER
No. C61194
CIVIL
STATE OF CALIFORNIA
05/29/2020

DESIGN	P WEBSTER
DRAWN	P WEBSTER
CHECKED	T LEWIS
APPROVED	M FISHER

WATERWORKS ENGINEERS
2380 Douglas Blvd, Suite 100 • Roseville, CA 95661 • 916-780-2888

CITY OF MORRO BAY
WATER RECLAMATION FACILITY
LIFT STATION AND OFFSITE PIPELINES

TRAFFIC HANDLING
PROJECT OVERVIEW AND KEY MAP 1

DATE	MAY 2020
PROJECT NUMBER	17-082
DRAWING NUMBER	05-TH-1
SHEET NUMBER	70

CONFORMED SET - DEC 2020

L:\CAD\PROJECTS\17-082 MORRO BAY PS AND PIPELINE_{S}\PROJECT FILES\DELIVERABLES\1782D-05TC101.DWG



HORIZSCALE 1"=200'

200 0 200 400 FEET

JOB NUMBER: 17-082

FILENAME: 1782D-05TC101.DWG

PLOT DATE: 06/2/20

PLOT TIME: 11:06:35

SHEET NUMBER 71

DATE	MAY 2020
PROJECT NUMBER	17-082
DRAWING NUMBER	05-TH-2

TRAFFIC HANDLING

PROJECT OVERVIEW AND KEY MAP 2

CITY OF MORRO BAY

WATER RECLAMATION FACILITY
LIFT STATION AND OFFSITE PIPELINES

WATERWORKS ENGINEERS
2260 Douglas Blvd, Suite 105 •Roseville, CA 95661 • 916-780-2888

DESIGN	P WEBSTER
DRAWN	P WEBSTER
CHECKED	T LEWIS
APPROVED	M FISHER

CONFORMED SET - DEC 2020

L:\CAD\PROJECTS\17-082 MORRO BAY PS AND PIPELINE_{S}\PROJECT FILES\DELIVERABLES\1782D-05TC102.DWG



HORIZ SCALE 1"=200'

200 0 200 400 FEET

JOB NUMBER: 17-082

FILENAME: 1782D-05TC102.DWG

PLOT DATE: 06/2/20

PLOT TIME: 11:09:00

TRAFFIC HANDLING

PROJECT OVERVIEW AND KEY MAP 3

CITY OF MORRO BAY

WATER RECLAMATION FACILITY
LIFT STATION AND OFFSITE PIPELINES

WATERWORKS ENGINEERS

2260 Douglas Blvd, Suite 105 •Roseville, CA 95661 • 916-780-2888

DESIGN	P WEBSTER
DRAWN	P WEBSTER
CHECKED	T LEWIS
APPROVED	M FISHER

DATE	MAY 2020
PROJECT NUMBER	17-082
DRAWING NUMBER	05-TH-3
SHEET NUMBER	72

CONFORMED SET - DEC 2020

ATASCADERO RD

OUTFALL RISER

ECVT

SS

10" DIP

DENSE TREES

2X6" TREE GMT

ECVT

ECVT

10+00

11+00

12+00

DWY

9+50

WV

066331034
EXST CITY WWTP

065182010
65TH ST OGLE, CHARLES E

DENSE TREES

DENSE BRUSH

MATCH LINE - 13+00
SEE BELOW

DIRT PILES

ECVT

13+00

NORTH

NOTES:

1. THE CONTRACTOR SHALL COMPLY WITH THE GENERAL TRAFFIC CONTROL NOTES LISTED ON DWG 05-TC-01.

KEY NOTES:

1. ACCOMMODATE HIGH SCHOOL ACCESS. COORDINATE COMMUNICATION WITH PROGRAM OUTREACH TEAM.

LEGEND:

- DELINEATOR/CONES
- WORK ZONE
- BARRICADE
- DIRECTION OF TRAFFIC
- BARRIER

DESIGN	P. WEBSTER
DRAWN	P. WEBSTER
CHECKED	T. LEWIS
APPROVED	M. FISHER

WATERWORKS ENGINEERS
2280 Douglas Blvd, Suite 100 • Roseville, CA 95661 • 916-780-2888

CITY OF MORRO BAY

WATER RECLAMATION FACILITY
LIFT STATION AND OFFSITE PIPELINES

TRAFFIC HANDLING

STAGE 1

065182010
65TH ST OGLE, CHARLES E

NORTH

MATCH LINE - 13+00
SEE ABOVE

DENSE TREES

DENSE BRUSH

DIRT PILES

13+00

14+00

15+00

16+00

17+00

ATASCADERO RD

DWY

1

WV

SS

GSMT

OHW

EXST CITY CORP. YARD

GREASE TRAP

TANK

TANKS

066331032
1281 EMBARCADERO CITY OF MORRO BAY (964)

066331033
CAYUCOS SANITARY DISTRICT (972)

20 0 20 40 FEET
HORIZ SCALE 1"=20'

REGISTERED PROFESSIONAL ENGINEER
RICHARD C. PHILLIPS
No. C071194
CIVIL
STATE OF CALIFORNIA

05/29/2020

DATE	MAY 2020
PROJECT NUMBER	17-082
DRAWING NUMBER	05-TC-4
SHEET NUMBER	73

L:\CAD\PROJECTS\17-082 MORRO BAY PS AND PIPELINE_(S)\PROJECT FILES\DELIVERABLES\1782D-05TC103.DWG

JOB NUMBER: 17-082 FILENAME: 1782D-05TC103.DWG PLOT DATE: 06/2/20 PLOT TIME: 11:12:19

CONFORMED SET - DEC 2020

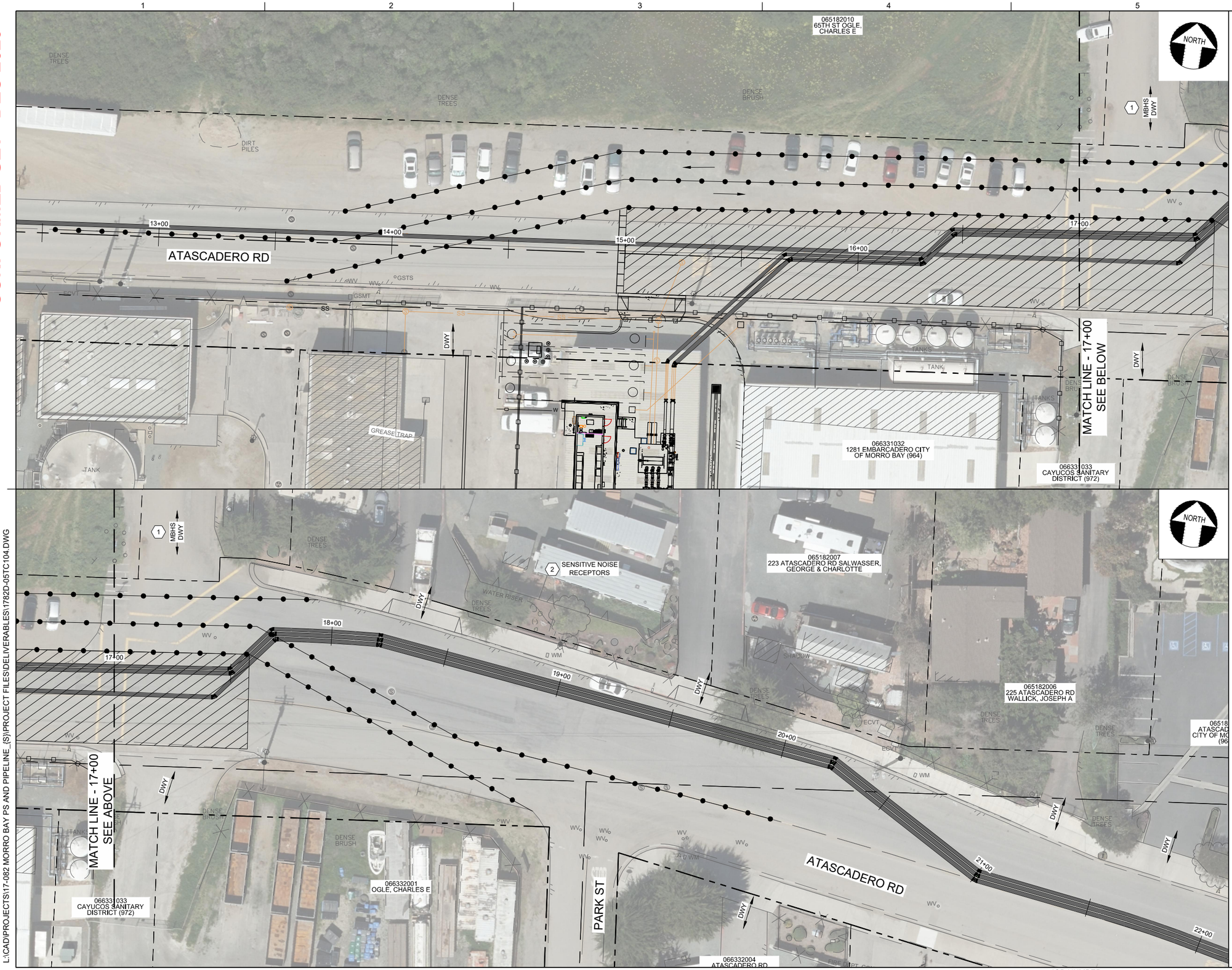

NOTES:

1. THE CONTRACTOR SHALL COMPLY WITH THE GENERAL TRAFFIC CONTROL NOTES LISTED ON DWG 05-TH-01.

CONSTRUCTION KEY NOTES:

1. ACCOMMODATE HIGH SCHOOL ACCESS. COORDINATE COMMUNICATION WITH PROGRAM OUTREACH TEAM.
2. ACCOMMODATE LARGE VEHICLE TRAFFIC.

LEGEND:

- DELINEATOR/CONES
- WORK ZONE
- BARRICADE
- DIRECTION OF TRAFFIC
- BARRIER

20 0 20 40 FEET
HORIZ SCALE 1"=20'

05/29/2020

DESIGN	P. WEBSTER
DRAWN	P. WEBSTER
CHECKED	T. LEWIS
APPROVED	M. FISHER

WATERWORKS ENGINEERS
2360 Douglas Blvd, Suite 100 • Roseville, CA 95661 • 916-780-2888

CITY OF MORRO BAY
WATER RECLAMATION FACILITY
LIFT STATION AND OFFSITE PIPELINES

TRAFFIC HANDLING
STAGE 2

DATE	MAY 2020
PROJECT NUMBER	17-082
DRAWING NUMBER	05-TH-5
SHEET NUMBER	74

L:\CAD\PROJECTS\17-082 MORRO BAY PS AND PIPELINE_(S)\PROJECT FILES\DELIVERABLES\1782D-05TC104.DWG

JOB NUMBER: 17-082 FILENAME: 1782D-05TC104.DWG PLOT DATE: 06/2/20 PLOT TIME: 11:16:34

CONFORMED SET - DEC 2020

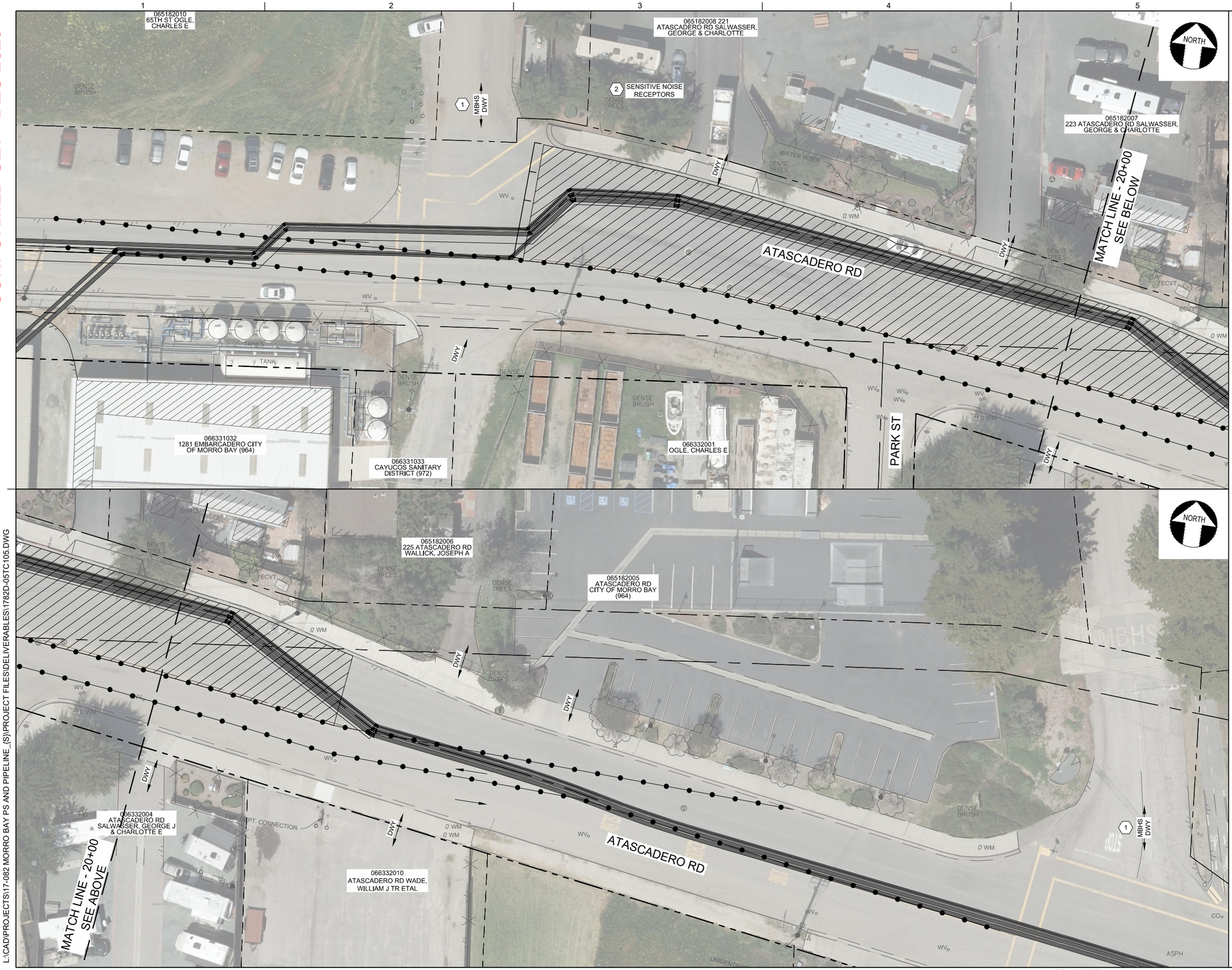

NOTES:

1. THE CONTRACTOR SHALL COMPLY WITH THE GENERAL TRAFFIC CONTROL NOTES LISTED ON DWG 05-TH-01.

CONSTRUCTION KEY NOTES:

1. ACCOMMODATE HIGH SCHOOL ACCESS. COORDINATE COMMUNICATION WITH CONSTRUCTION MANAGER.
2. ACCOMMODATE LARGE VEHICLE TRAFFIC.

LEGEND:

- DELINEATOR/CONES
- WORK ZONE
- BARRICADE
- DIRECTION OF TRAFFIC
- BARRIER

20 0 20 40 FEET
HORIZ SCALE 1"=20'

05/29/2020

DESIGN	P. WEBSTER
DRAWN	P. WEBSTER
CHECKED	T. LEWIS
APPROVED	M. FISHER

WATERWORKS ENGINEERS
2260 Douglas Blvd, Suite 100 • Roseville, CA 95661 • 916-780-2888

CITY OF MORRO BAY
WATER RECLAMATION FACILITY
LIFT STATION AND OFFSITE PIPELINES

TRAFFIC HANDLING
STAGE 3

DATE	MAY 2020
PROJECT NUMBER	17-082
DRAWING NUMBER	05-TH-6
SHEET NUMBER	75

L:\CAD\PROJECTS\17-082 MORRO BAY PS AND PIPELINE_(S)\PROJECT FILES\DELIVERABLES\1782D-05TC105.DWG

JOB NUMBER: 17-082 FILENAME: 1782D-05TC105.DWG PLOT DATE: 05/26/20 PLOT TIME: 16:11:13

CONFORMED SET - DEC 2020

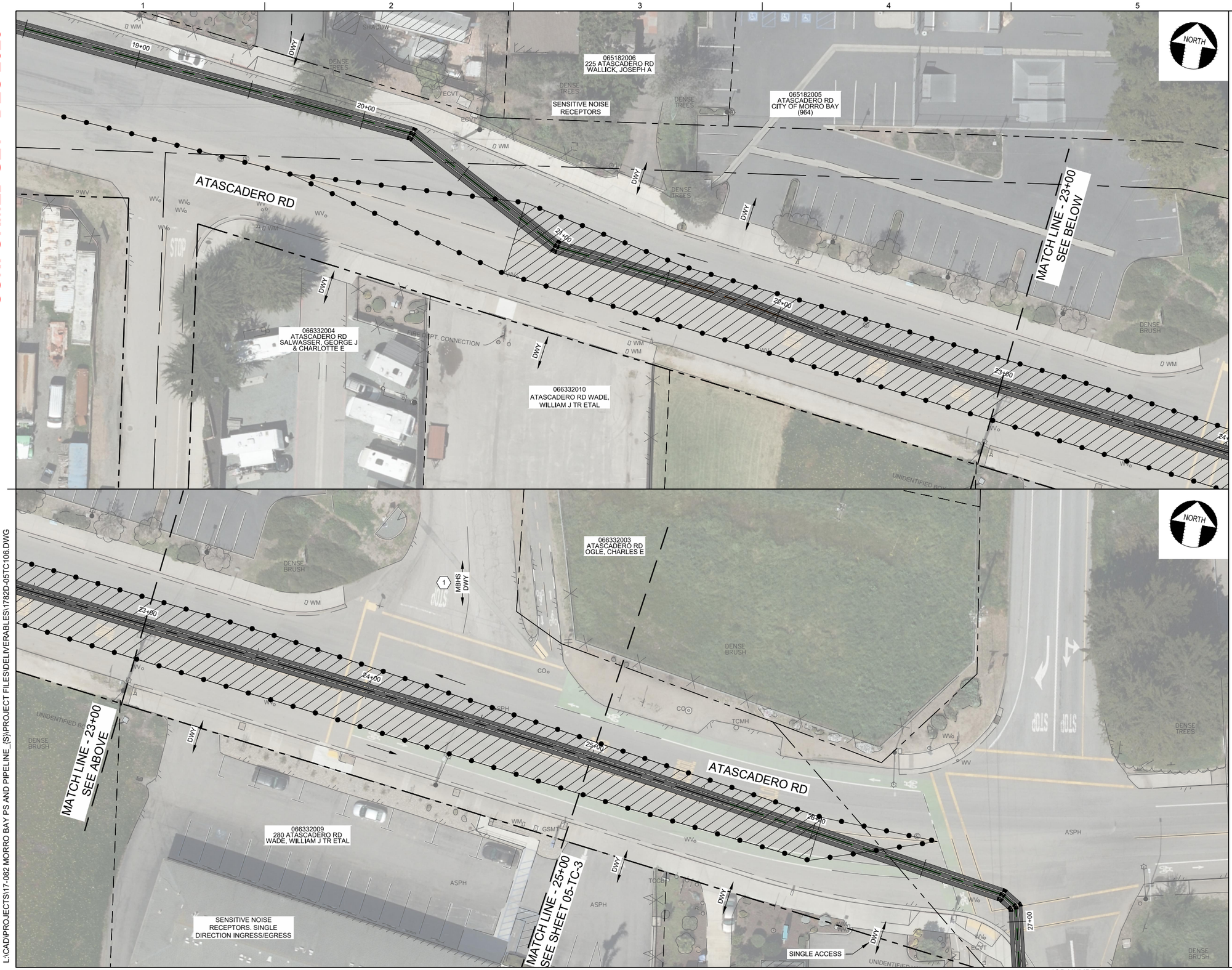

NOTES:

1. THE CONTRACTOR SHALL COMPLY WITH THE GENERAL TRAFFIC CONTROL NOTES LISTED ON DWG 05-TH-01.

CONSTRUCTION KEY NOTES:

1. PEDESTRIAN AND BICYCLE TRAFFIC TO BE DIVERTED AROUND WORK ZONE IN ACCORDANCE WITH CALTRANS EP/TCP.
2. ACCOMMODATE PEDESTRIANS AND BICYCLE TRAFFIC PER CA MUTCD 2014 ED SECTION 6D.01 AND INSTALL/MAINTAIN A 60"W SMOOTH, CONTINUOUS HARD SURFACE.
3. PEDESTRIAN AND BICYCLE TRAFFIC TO BE DIVERTED AROUND WORK ZONE IN ACCORDANCE WITH CITY EP/TCP.
4. CLOSE BIKE PATH AND PREPARE BIKE TRAFFIC DIVERSION PLAN IN COORDINATION WITH THE CONSTRUCTION MANAGER.

LEGEND:

- DELINEATOR/CONES
- WORK ZONE
- BARRICADE
- DIRECTION OF TRAFFIC
- BARRIER

20 0 20 40 FEET
HORIZ SCALE 1"=20'

REGISTERED PROFESSIONAL ENGINEER
MICHAEL J. FISHER
No. C67194
CIVIL
STATE OF CALIFORNIA
05/29/2020

DESIGN P. WEBSTER
DRAWN P. WEBSTER
CHECKED T. LEWIS
APPROVED M. FISHER

WATERWORKS ENGINEERS
2260 Douglas Blvd, Suite 105 • Roseville, CA 95661 • 916-780-2888

CITY OF MORRO BAY
WATER RECLAMATION FACILITY
LIFT STATION AND OFFSITE
PIPELINES

TRAFFIC HANDLING
STAGE 4

DATE MAY 2020
PROJECT NUMBER 17-082
DRAWING NUMBER 05-TH-7
SHEET NUMBER 76

L:\CAD\PROJECTS\17-082 MORRO BAY PS AND PIPELINE_{S}\PROJECT FILES\DELIVERABLES\1782D-05TC106.DWG

JOB NUMBER: 17-082 FILENAME: 1782D-05TC106.DWG PLOT DATE: 05/26/20 PLOT TIME: 16:18:14

CONFORMED SET - DEC 2020

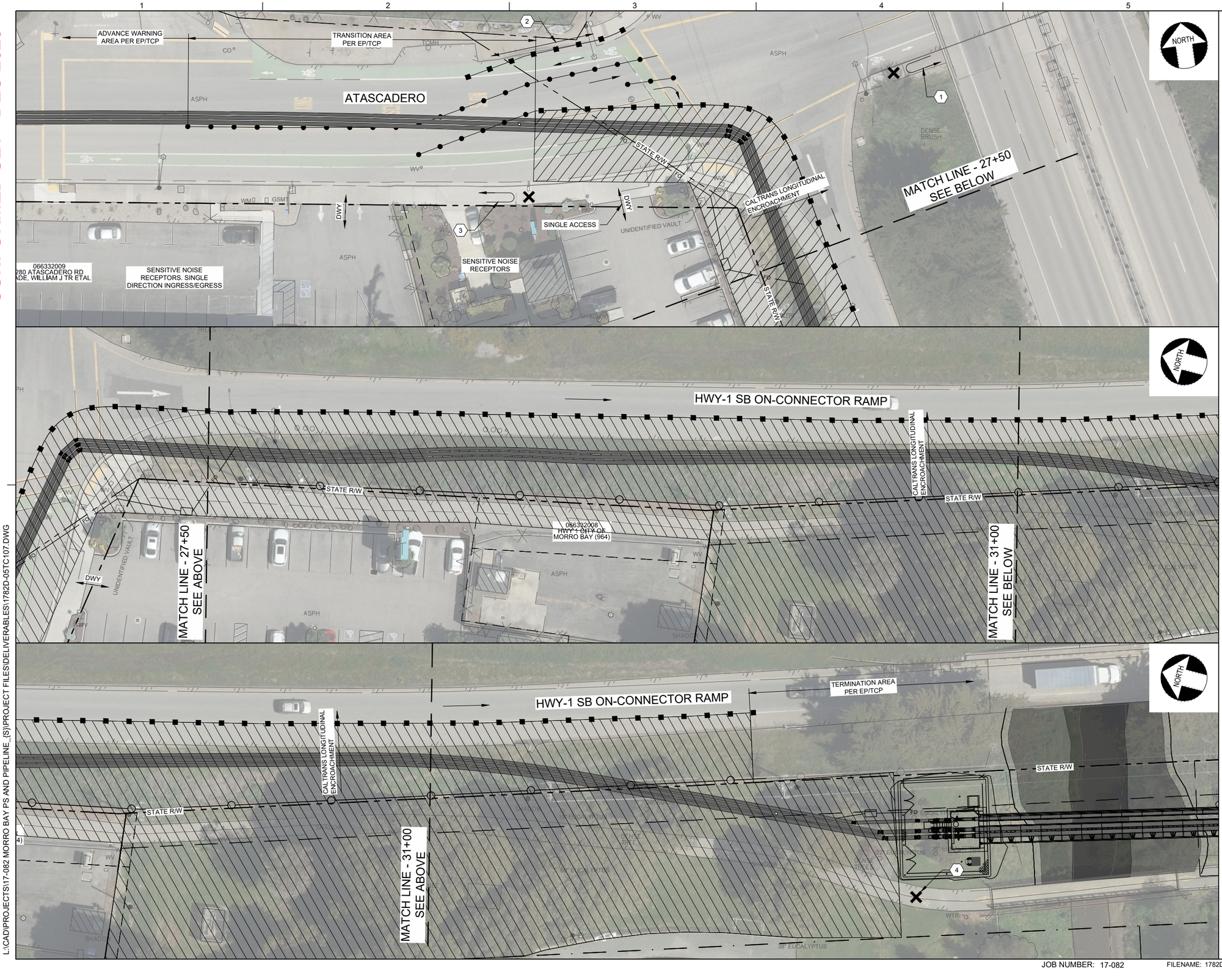

NOTES:

1. 1. THE CONTRACTOR SHALL COMPLY WITH THE GENERAL TRAFFIC CONTROL NOTES LISTED ON DWG 05-TH-01

KEY NOTES:

1. PEDESTRIAN AND BICYCLE TRAFFIC TO BE DIVERTED AROUND WORK ZONE TO NORTH SIDE OF ATASCADERO PER CALTRANS EP/TCP.
2. ACCOMMODATE PEDESTRIANS AND BICYCLE TRAFFIC PER CA MUTCD 2014 ED SECTION 6D.01 AND INSTALL/MAINTAIN A 60"W SMOOTH, CONTINUOUS HARD SURFACE.
3. PEDESTRIAN AND BICYCLE TRAFFIC TO BE DIVERTED AROUND WORK ZONE TO NORTH SIDE OF ATASCADERO PER CITY EP/TCP.
4. 4. SHUT DOWN BIKE PATH AND INSTALL DIVERSION SIGNEAGE IN COORDINATION WITH CONSTRUCTION MANAGER.

LEGEND:

- DELINEATOR/CONES
- WORK ZONE
- BARRICADE
- DIRECTION OF TRAFFIC
- BARRIER

20 0 20 40 FEET
HORIZ SCALE 1"=20'

DESIGN P. WEBSTER
DRAWN P. WEBSTER
CHECKED T. LEWIS
APPROVED M. FISHER

WATERWORKS ENGINEERS
2260 Douglas Blvd, Suite 105 • Roseville, CA 95661 • 916-780-2888

CITY OF MORRO BAY
WATER RECLAMATION FACILITY
LIFT STATION AND OFFSITE PIPELINES

TRAFFIC HANDLING
STAGE 5

REGISTERED PROFESSIONAL ENGINEER
MICHAEL J. FISHER
No. C67194
CIVIL
STATE OF CALIFORNIA
05/29/2020

DATE MAY 2020
PROJECT NUMBER 17-082
DRAWING NUMBER 05-TH-8
SHEET NUMBER 77

L:\CAD\PROJECTS\17-082 MORRO BAY PS AND PIPELINE_{S}\PROJECT FILES\DELIVERABLES\1782D-05TC107.DWG

JOB NUMBER: 17-082 FILENAME: 1782D-05TC107.DWG PLOT DATE: 06/2/20 PLOT TIME: 11:38:20

CONFORMED SET - DEC 2020

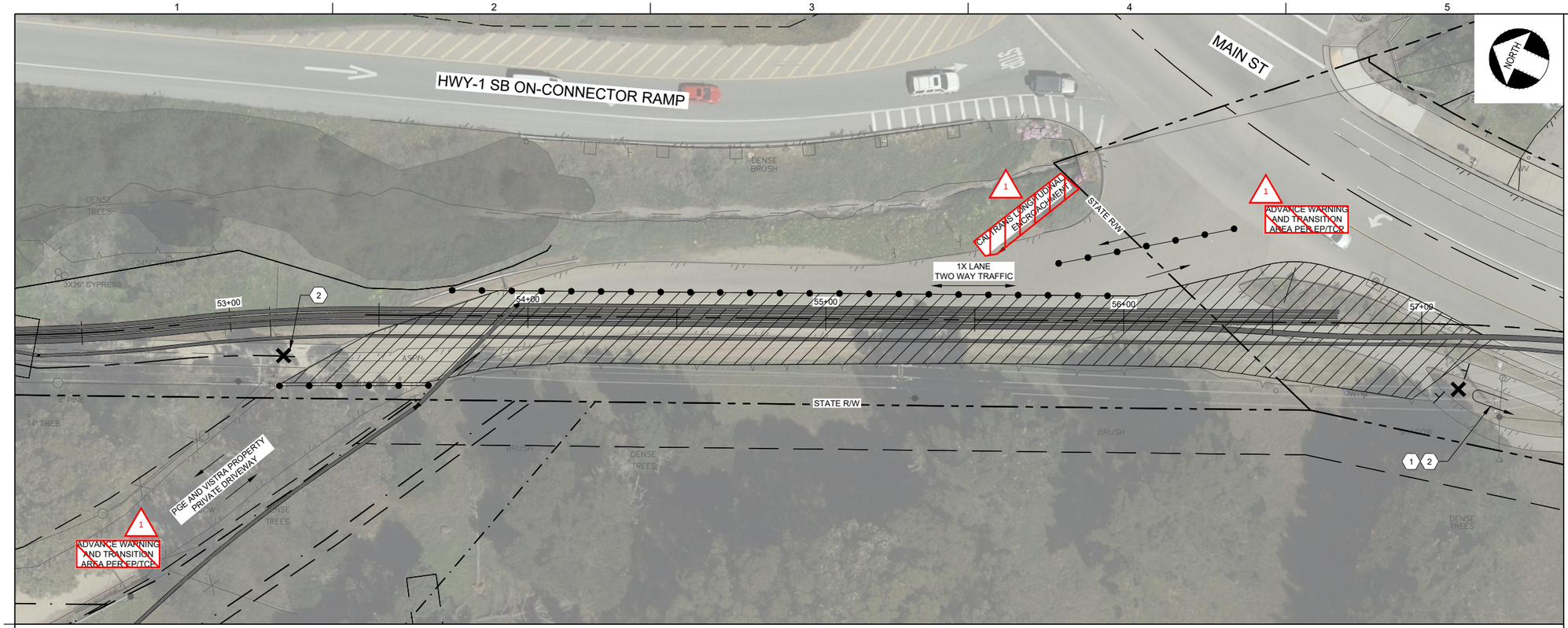

NOTES:

1. THE CONTRACTOR SHALL COMPLY WITH THE GENERAL TRAFFIC CONTROL NOTES LISTED ON DWG 05-TH-01.

KEY NOTES:

1. PEDESTRIAN AND BICYCLE TRAFFIC TO BE DIVERTED AROUND WORK ZONE IN ACCORDANCE WITH EP/TCP.
2. CLOSE BIKE PATH AND PREPARE BIKE TRAFFIC DIVERSION PLAN IN COORDINATION WITH THE CONSTRUCTION MANAGER.

LEGEND:

- DELINEATOR/CONES
- WORK ZONE
- BARRICADE
- DIRECTION OF TRAFFIC
- BARRIER

20 0 20 40 FEET
HORIZ SCALE 1"=20'

REGISTERED PROFESSIONAL ENGINEER
No. C67194
CIVIL
STATE OF CALIFORNIA
05/29/2020

DESIGN	P. WEBSTER
DRAWN	P. WEBSTER
CHECKED	T. LEWIS
APPROVED	M. FISHER

WATERWORKS ENGINEERS
2260 Douglas Blvd, Suite 105 • Roseville, CA 95661 • 916-780-2888

CITY OF MORRO BAY
WATER RECLAMATION FACILITY
LIFT STATION AND OFFSITE PIPELINES

TRAFFIC HANDLING
STAGE 6

DATE: MAY 2020
PROJECT NUMBER: 17-082
DRAWING NUMBER: 05-TH-9
SHEET NUMBER: 78

L:\CAD\PROJECTS\17-082 MORRO BAY PS AND PIPELINE_(S)\PROJECT FILES\DELIVERABLES\1782D-05TC108.DWG

JOB NUMBER: 17-082 FILENAME: 1782D-05TC108.DWG PLOT DATE: 06/2/20 PLOT TIME: 11:38:50

CONFORMED SET - DEC 2020



NOTES:

1. THE CONTRACTOR SHALL COMPLY WITH THE GENERAL TRAFFIC CONTROL NOTES LISTED ON DWG 05-TH-01.

KEY NOTES:

1. CONTRACTOR SHALL PREPARE TRAFFIC CONTROL PLAN FOR TRAFFIC HANDLING DURING PS-B CONSTRUCTION.
2. CONTRACTOR SHALL ACCOMMODATE LARGE VEHICLE TRAFFIC AND COORDINATE WITH THE CONSTRUCTION MANAGER ON NOTIFICATION.

LEGEND:

- DELINEATOR/CONES
- WORK ZONE
- BARRICADE
- DIRECTION OF TRAFFIC
- BARRIER

20 0 20 40 FEET
HORIZ SCALE 1"=20'

REGISTERED PROFESSIONAL ENGINEER
PAUL HALEY PRICE
No. C 67194
CIVIL
STATE OF CALIFORNIA
05/29/2020

DESIGN	P. WEBSTER
DRAWN	P. WEBSTER
CHECKED	T. LEWIS
APPROVED	M. FISHER

WATERWORKS ENGINEERS
2260 Douglas Blvd, Suite 105 • Roseville, CA 95661 • 916-780-2888

CITY OF MORRO BAY
WATER RECLAMATION FACILITY
LIFT STATION AND OFFSITE PIPELINES

TRAFFIC HANDLING
STAGE 7

DATE	MAY 2020
PROJECT NUMBER	17-082
DRAWING NUMBER	05-TH-10
SHEET NUMBER	79

L:\CAD\PROJECTS\17-082 MORRO BAY PS AND PIPELINE_(S)\PROJECT FILES\DELIVERABLES\1782D-05TC109.DWG

JOB NUMBER: 17-082 FILENAME: 1782D-05TC109.DWG PLOT DATE: 06/2/20 PLOT TIME: 11:39:59

CONFORMED SET - DEC 2020

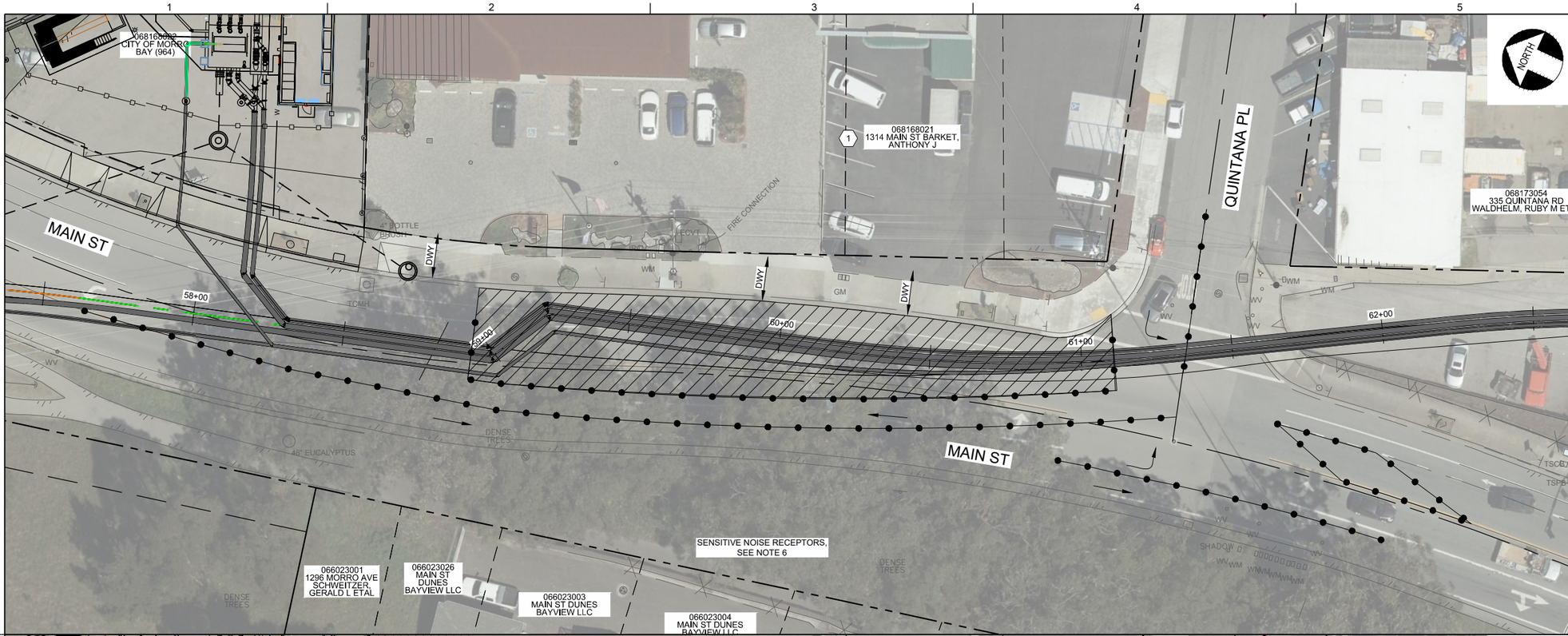

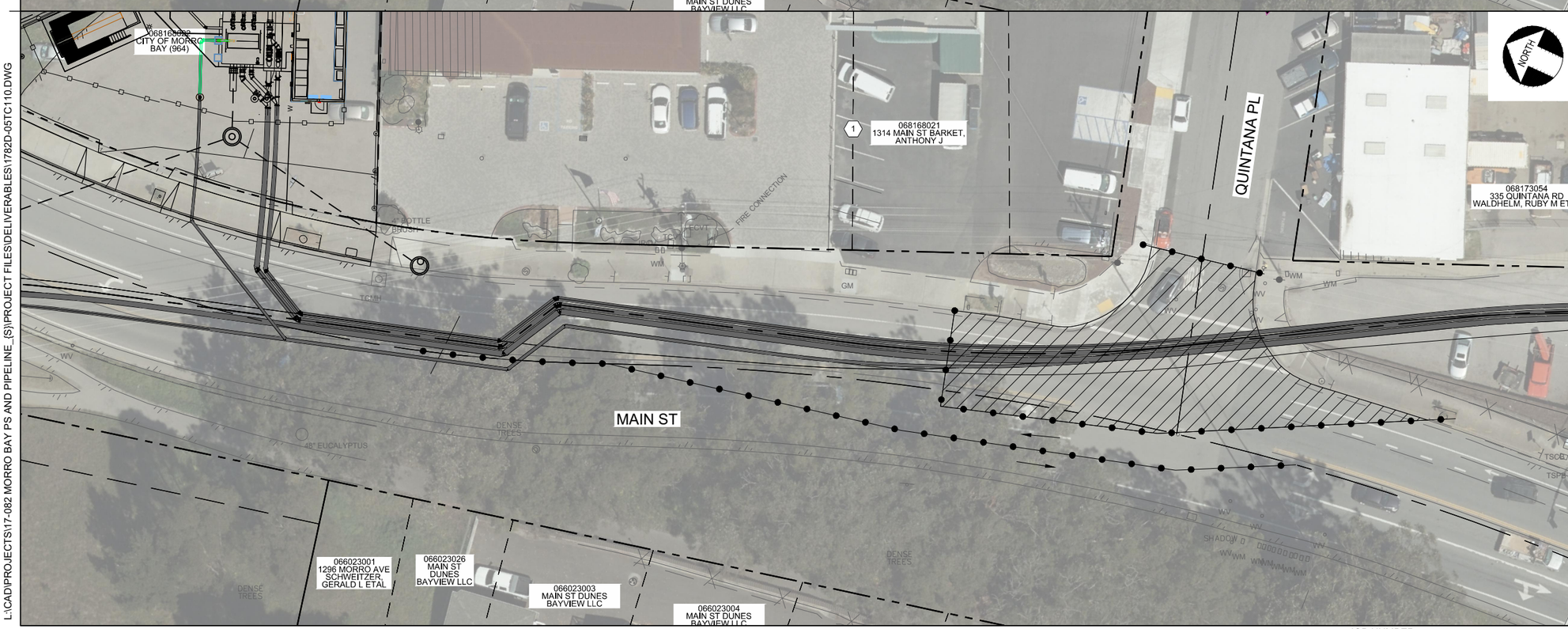

NOTES:

1. THE CONTRACTOR SHALL COMPLY WITH THE GENERAL TRAFFIC CONTROL NOTES LISTED ON DWG 05-TH-01.

KEY NOTES:

1. CONTRACTOR SHALL ACCOMMODATE LARGE TRUCK DELIVERY TRAFFIC FOR BUSINESS AT 355 QUINTANA PLACE IN COORDINATION WITH THE CONSTRUCTION MANAGER. CONTRACTOR MAY BE REQUIRED TO INSTALL PIPELINES ACROSS QUINTANA PLACE OUTSIDE OF BUSINESS HOURS AND BEFORE 10 PM TO ENSURE NO INTERRUPTION IN SERVICE FOR LARGE TRUCK DELIVERIES.

LEGEND:

- DELINEATOR/CONES
- WORK ZONE
- BARRICADE
- DIRECTION OF TRAFFIC
- BARRIER

20 0 20 40 FEET
HORIZ SCALE 1"=20'

REGISTERED PROFESSIONAL ENGINEER
MICHAEL J. FISHER
No. C67194
CIVIL
STATE OF CALIFORNIA
05/29/2020

DESIGN P. WEBSTER
DRAWN P. WEBSTER
CHECKED T. LEWIS
APPROVED M. FISHER

WATERWORKS ENGINEERS
2260 Douglas Blvd, Suite 105 • Roseville, CA 95661 • 916-780-2888

CITY OF MORRO BAY
WATER RECLAMATION FACILITY
LIFT STATION AND OFFSITE PIPELINES

TRAFFIC HANDLING
STAGE 7

DATE MAY 2020
PROJECT NUMBER 17-082
DRAWING NUMBER 05-TH-11
SHEET NUMBER 80

L:\CAD\PROJECTS\17-082 MORRO BAY PS AND PIPELINE_{S}\PROJECT FILES\DELIVERABLES\1782D-05TC110.DWG

JOB NUMBER: 17-082 FILENAME: 1782D-05TC110.DWG PLOT DATE: 06/2/20 PLOT TIME: 11:40:34

CONFORMED SET - DEC 2020

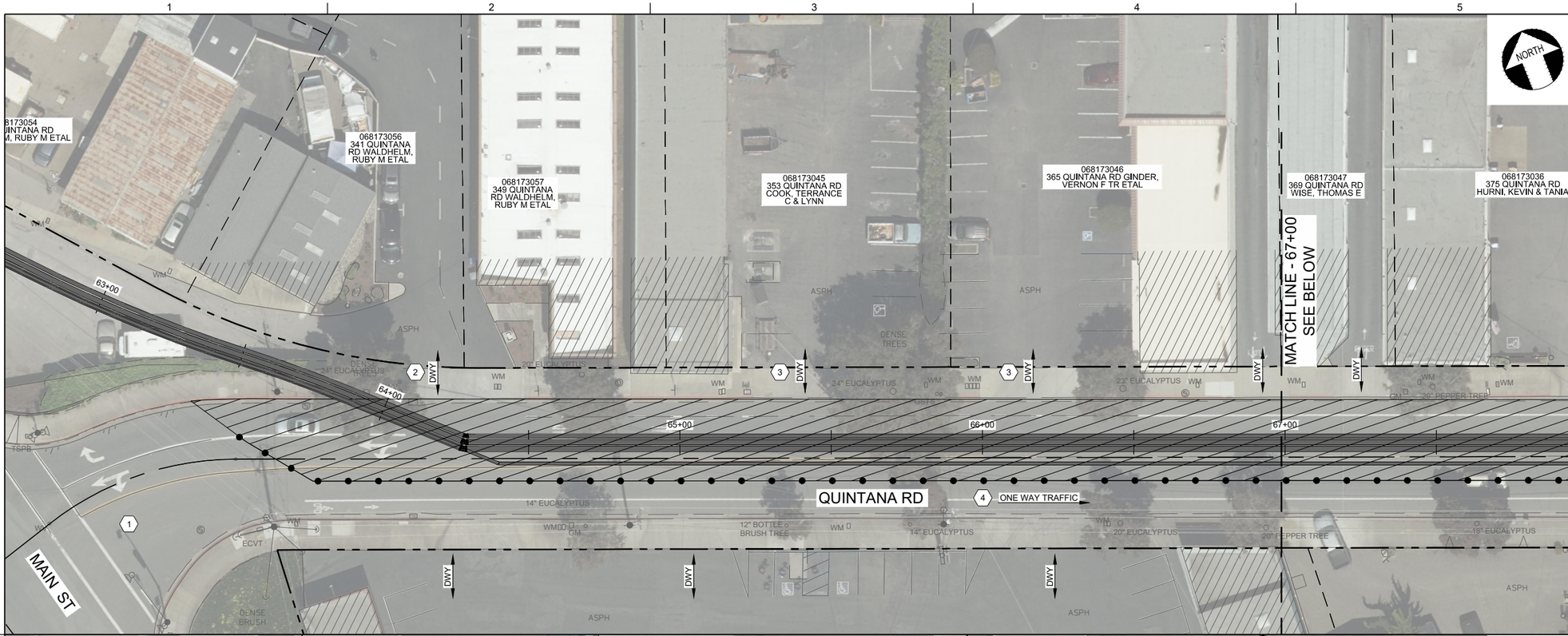

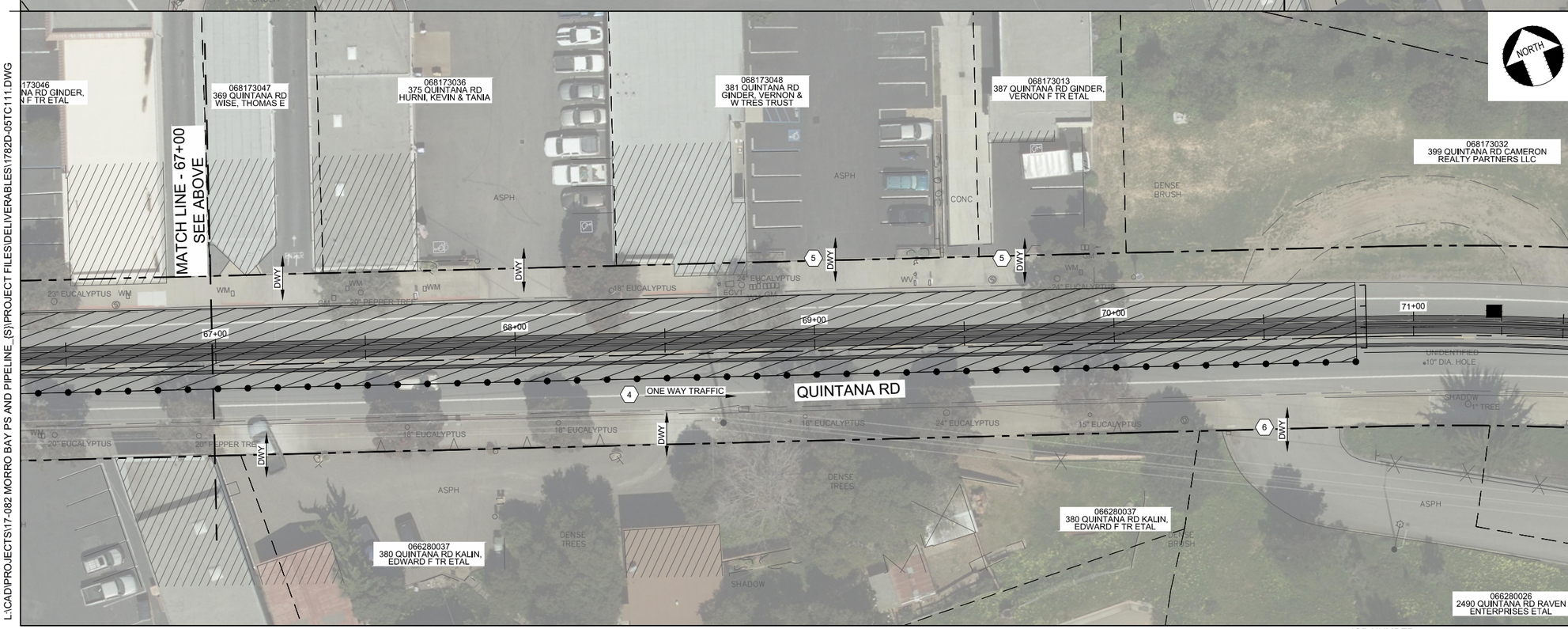

NOTES:

1. THE CONTRACTOR SHALL COMPLY WITH THE GENERAL TRAFFIC CONTROL NOTES LISTED ON DWG 05-TH-01.

KEY NOTES:

1. CONTRACTOR MAY IMPLEMENT THE STAGE 9 WORK ZONE SHOWN ON DRAWING 05-TC 13 DURING CONSTRUCTION IN STAGE 8. TRAFFIC CONTROL PLANS SHALL BE PREPARED TO ACCOMMODATE TRAFFIC IN THIS AREA DURING CONSTRUCTION. COORDINATE SPECIFIC PLANS, CONSTRUCTION STAGING, WORK AREAS, AND NOTIFICATIONS WITH CONSTRUCTION MANAGER.
2. COORDINATE NOTIFICATIONS ON BUSINESSES ACCESS WITH THE CONSTRUCTION MANAGER.
3. CONTRACTOR SHALL ACCOMMODATE SINGLE ENTRANCES.
4. CONTRACTOR SHALL MAINTAIN ONE-WAY TRAFFIC FOR LOCAL BUSINESS ACCESS. COORDINATE CONSTRUCTION DETOUR SIGNAGE AND COMMUNITY NOTIFICATION WITH THE CONSTRUCTION MANAGER DURING PREPARATION OF TRAFFIC CONTROL PLAN.
5. CONTRACTOR SHALL ACCOMMODATE LARGE TRUCK DELIVERY TRAFFIC FOR BUSINESS AT 381 QUINTANA ROAD DURING CONSTRUCTION IN THIS STAGE AND IN ADJACENT PHASES. CONTRACTOR MAY BE REQUIRED TO INSTALL PIPELINES ACROSS ACCESS POINTS OUTSIDE OF BUSINESS HOURS AND BEFORE 10 PM TO ENSURE NO INTERRUPTION IN SERVICE FOR LARGE TRUCK DELIVERIES. COORDINATE SCHEDULE AND TRAFFIC HANDLING WITH THE CONSTRUCTION MANAGER.
6. DRIVEWAY TO 400 QUINTANA ROAD SHALL ONLY BE USED FOR ACCESS TO BUSINESSES IN SHOPPING PLAZA AT 400 QUINTANA ROAD.

LEGEND:

- DELINEATOR/CONES
- WORK ZONE
- BARRICADE
- DIRECTION OF TRAFFIC
- BARRIER

20 0 20 40 FEET
HORIZ SCALE 1"=20'

REGISTERED PROFESSIONAL ENGINEER
MICHAEL J. FISHER
No. C67194
CIVIL
STATE OF CALIFORNIA
05/29/2020

DESIGN P. WEBSTER
DRAWN P. WEBSTER
CHECKED T. LEWIS
APPROVED M. FISHER

WATERWORKS ENGINEERS
2260 Douglas Blvd, Suite 105 • Roseville, CA 95661 • 916-780-2888

CITY OF MORRO BAY
WATER RECLAMATION FACILITY
LIFT STATION AND OFFSITE PIPELINES

TRAFFIC HANDLING
STAGE 8

DATE MAY 2020
PROJECT NUMBER 17-082
DRAWING NUMBER 05-TH-12
SHEET NUMBER 81

L:\CAD\PROJECTS\17-082 MORRO BAY PS AND PIPELINE_{S}\PROJECT FILES\DELIVERABLES\1782D-05TC111.DWG

JOB NUMBER: 17-082 FILENAME: 1782D-05TC111.DWG PLOT DATE: 06/2/20 PLOT TIME: 11:48:44

CONFORMED SET - DEC 2020



NOTES:

1. THE CONTRACTOR SHALL COMPLY WITH THE GENERAL TRAFFIC CONTROL NOTES LISTED ON DWG 05-TH-01.

KEY NOTES:

1. DRIVEWAY TO 400 QUINTANA ROAD SHALL ONLY BE USED FOR ACCESS TO BUSINESSES IN SHOPPING PLAZA AT 400 QUINTANA ROAD.
2. THE CONTRACTOR WILL BE PERMITTED TO CLOSE QUINTANA ROAD BETWEEN THE DRIVEWAY ACCESS FOR 400 QUINTANA ROAD AND KENNEDY WAY AS A WORK ZONE FOR CONSTRUCTION IN ADJACENT STAGES. TRAFFIC CONTROL PLANS MUST ACCOMMODATE LOCAL BUSINESS TRAFFIC AND ALLOW FOR EMERGENCY ACCESS THROUGH WORK ZONE. THIS SECTION OF QUINTANA SHALL NOT BE CLOSED DURING CONSTRUCTION IN THE INTERSECTION OF QUINTANA ROAD AND KENNEDY WAY.
3. COORDINATE QUINTANA ROAD/KENNEDY WAY INTERSECTION CONSTRUCTION SCHEDULE AND SEQUENCING WITH CONSTRUCTION MANAGER. CONTRACTOR SHALL SEQUENCE CONSTRUCTION TO ACCOMMODATE LOCAL TRAFFIC. CONTRACTOR SHALL NOT BE PERMITTED TO DIVERT TRAFFIC ONTO PRIVATE PROPERTY DURING INTERSECTION CONSTRUCTION. MAINTAIN ONE-WAY TRAFFIC ON QUINTANA DURING INTERSECTION CONSTRUCTION TO ACCOMMODATE EMERGENCY ACCESS.
4. CONTRACTOR WILL NOT BE PERMITTED TO CLOSE QUINTANA ROAD BETWEEN KENNEDY WAY AND MORRO BAY BOULEVARD DURING CONSTRUCTION IN THE INTERSECTION OF QUINTANA ROAD AND KENNEDY WAY.
5. TRAFFIC CONTROL PLAN SHALL NOT DIVERT TRAFFIC ONTO PRIVATE PROPERTY DURING CONSTRUCTION.

LEGEND:

- DELINEATOR/CONES
- WORK ZONE
- BARRICADE
- DIRECTION OF TRAFFIC
- BARRIER

20 0 20 40 FEET
HORIZ SCALE 1"=20'

REGISTERED PROFESSIONAL ENGINEER
No. C67194
CIVIL
STATE OF CALIFORNIA
05/29/2020

DESIGN	P. WEBSTER
DRAWN	P. WEBSTER
CHECKED	T. LEWIS
APPROVED	M. FISHER

WATERWORKS ENGINEERS
2260 Douglas Blvd, Suite 100 • Roseville, CA 95661 • 916-780-2888

CITY OF MORRO BAY
WATER RECLAMATION FACILITY
LIFT STATION AND OFFSITE PIPELINES

TRAFFIC HANDLING
STAGE 9, 10, & 11

DATE	MAY 2020
PROJECT NUMBER	17-082
DRAWING NUMBER	05-TH-13
SHEET NUMBER	82

L:\CAD\PROJECTS\17-082 MORRO BAY PS AND PIPELINE_(S)\PROJECT FILES\DELIVERABLES\1782D-05TC112.DWG

JOB NUMBER: 17-082 FILENAME: 1782D-05TC112.DWG PLOT DATE: 06/2/20 PLOT TIME: 11:52:50

CONFORMED SET - DEC 2020



NOTES:

1. THE CONTRACTOR SHALL COMPLY WITH THE GENERAL TRAFFIC CONTROL NOTES LISTED ON DWG 05-TH-01.

KEY NOTES:

1. TRAFFIC CONTROL PLAN SHALL NOT DIVERT TRAFFIC ONTO PRIVATE PROPERTY DURING CONSTRUCTION IN STAGE 11.
2. CONTRACTOR SHALL MAINTAIN ONE-WAY TRAFFIC FOR EMERGENCY ACCESS DURING CONSTRUCTION BETWEEN DRIVEWAY FOR 740 QUINTANA ROAD AND KENNEDY WAY.
3. CONTRACTOR SHALL MAINTAIN ONE-WAY TRAFFIC FOR BUSINESS ACCESS DURING CONSTRUCTION BETWEEN DRIVEWAY FOR 740 QUINTANA ROAD AND MORRO BAY BOULEVARD.
4. CONTRACTOR SHALL ACCOMMODATE TRAFFIC FROM URGENT CARE CLINIC. COORDINATE NOTIFICATION AND TRAFFIC HANDLING WITH THE CONSTRUCTION MANAGER.

LEGEND:

- DELINEATOR/CONES
- WORK ZONE
- BARRICADE
- DIRECTION OF TRAFFIC
- BARRIER

20 0 20 40 FEET
HORIZ SCALE 1"=20'

DESIGN P. WEBSTER
DRAWN P. WEBSTER
CHECKED T. LEWIS
APPROVED M. FISHER

WATERWORKS ENGINEERS
2260 Douglas Blvd, Suite 105 • Roseville, CA 95661 • 916-780-2888

CITY OF MORRO BAY
WATER RECLAMATION FACILITY
LIFT STATION AND OFFSITE PIPELINES

TRAFFIC HANDLING
STAGE 11

REGISTERED PROFESSIONAL ENGINEER
MICHAEL A. FISHER
No. C67194
CIVIL
STATE OF CALIFORNIA
05/29/2020

DATE MAY 2020
PROJECT NUMBER 17-082
DRAWING NUMBER 05-TH-14
SHEET NUMBER 83

L:\CAD\PROJECTS\17-082 MORRO BAY PS AND PIPELINE_{S}\PROJECT FILES\DELIVERABLES\1782D-05TC113.DWG

JOB NUMBER: 17-082 FILENAME: 1782D-05TC113.DWG PLOT DATE: 06/2/20 PLOT TIME: 12:00:07

CONFORMED SET - DEC 2020



NOTES:

1. THE CONTRACTOR SHALL COMPLY WITH THE GENERAL TRAFFIC CONTROL NOTES LISTED ON DWG 05-TH-01.

KEY NOTES:

1. TRAFFIC CONTROL PLAN SHALL NOT DIVERT TRAFFIC ONTO PRIVATE PROPERTY DURING CONSTRUCTION IN STAGE 11.
2. CONTRACTOR SHALL ACCOMMODATE TRAFFIC FROM URGENT CARE CLINIC. COORDINATE NOTIFICATION AND TRAFFIC HANDLING WITH THE CONSTRUCTION MANAGER.
3. TRAFFIC CONTROL PLAN SHALL ACCOMMODATE SINGLE PROPERTY ENTRANCES.
4. TRAFFIC CONTROL PLAN SHALL ACCOMMODATE AND DIRECT LOCAL BUSINESS TRAFFIC IN THIS STAGE.

LEGEND:

- DELINEATOR/CONES
- WORK ZONE
- BARRICADE
- DIRECTION OF TRAFFIC
- BARRIER

20 0 20 40 FEET
HORIZ SCALE 1"=20'

REGISTERED PROFESSIONAL ENGINEER
MICHAEL J. FISHER
No. C67194
CIVIL
STATE OF CALIFORNIA
05/29/2020

DESIGN P. WEBSTER
DRAWN P. WEBSTER
CHECKED T. LEWIS
APPROVED M. FISHER

WATERWORKS ENGINEERS
2260 Douglas Blvd, Suite 105 • Roseville, CA 95661 • 916-780-2888

CITY OF MORRO BAY
WATER RECLAMATION FACILITY
LIFT STATION AND OFFSITE PIPELINES

TRAFFIC HANDLING
STAGE 11, CONT'D

DATE MAY 2020
PROJECT NUMBER 17-082
DRAWING NUMBER 05-TH-15
SHEET NUMBER 84

L:\CAD\PROJECTS\17-082 MORRO BAY PS AND PIPELINE_{S}\PROJECT FILES\DELIVERABLES\1782D-05TC114.DWG

JOB NUMBER: 17-082 FILENAME: 1782D-05TC114.DWG PLOT DATE: 06/2/20 PLOT TIME: 12:03:54

CONFORMED SET - DEC 2020



NOTES:

1. THE CONTRACTOR SHALL COMPLY WITH THE GENERAL TRAFFIC CONTROL NOTES LISTED ON DWG 05-TH-01.
2. IF CONTRACTOR UTILIZES LAS TUNAS FOR RECEIVING PORTAL (SHAFT) END OF TRENCHLESS CROSSING, CONTRACTOR SHALL LIMIT CLOSURE OF LAS TUNAS STREET TO ONLY THOSE TIMES DURING CONTINUOUS CONSTRUCTION ACTIVITIES IN STAGE 12 (I.E. RECEIVING PIT CONSTRUCTION, PIPELINE CONSTRUCTION, UTILITY RELOCATION, PAVING, ETC.) LAS TUNAS SHALL REMAIN OPEN FOR TYPICAL PUBLIC USE, INCLUDING VEHICULAR, BICYCLE AND PEDESTRIAN TRAVEL, DURING PERIODS OF LIMITED CONSTRUCTION ACTIVITIES (I.E. NON WORK HOURS, TUNNELING, ETC.). IF CONTRACTOR UTILIZES LAS TUNAS FOR LAUNCHING PORTAL (SHAFT) END OF TRENCHLESS CROSSING, CONTRACTOR MAY CLOSE LAS TUNAS FOR THE DURATION OF TUNNELING ACTIVITIES.

KEY NOTES:

1. CONTRACTOR SHALL COMPLETE CONSTRUCTION IN STAGE 12 AND PROVIDE A DRIVABLE SURFACE BEFORE PROCEEDING WITH CONSTRUCTION IN STAGE 13.

LEGEND:

- DELINEATOR/CONES
- WORK ZONE
- BARRICADE
- DIRECTION OF TRAFFIC
- BARRIER

20 0 20 40 FEET
HORIZ SCALE 1"=20'

REGISTERED PROFESSIONAL ENGINEER
PATRICHA EL FISHER
No. C67194
CIVIL
STATE OF CALIFORNIA
05/29/2020

DESIGN P. WEBSTER
DRAWN P. WEBSTER
CHECKED T. LEWIS
APPROVED M. FISHER

WATERWORKS ENGINEERS
2260 Douglas Blvd, Suite 105 • Roseville, CA 95661 • 916-780-2888

CITY OF MORRO BAY
WATER RECLAMATION FACILITY
LIFT STATION AND OFFSITE PIPELINES

TRAFFIC HANDLING
STAGE 12

DATE MAY 2020
PROJECT NUMBER 17-082
DRAWING NUMBER 05-TH-16
SHEET NUMBER 85

L:\CAD\PROJECTS\17-082 MORRO BAY PS AND PIPELINE_{S}\PROJECT FILES\DELIVERABLES\1782D-05TC115.DWG

JOB NUMBER: 17-082 FILENAME: 1782D-05TC115.DWG PLOT DATE: 06/2/20 PLOT TIME: 12:26:49

CONFORMED SET - DEC 2020



NOTES:

1. THE CONTRACTOR SHALL COMPLY WITH THE GENERAL TRAFFIC CONTROL NOTES LISTED ON DWG 05-TH-01.

KEY NOTES:

1. CONTRACTOR SHALL SUBMIT A CONSTRUCTION SEQUENCING PLAN TO THE CONSTRUCTION MANAGER FOR PIPELINE AND APPURTENANCE CONSTRUCTION AROUND THE HIGH POINT.
2. TRAFFIC CONTROL PLAN SHALL ACCOMMODATE SINGLE PROPERTY ENTRANCES.
3. COORDINATE QUINTANA ROAD/KINGS WAY INTERSECTION CONSTRUCTION SCHEDULE AND SEQUENCING WITH CONSTRUCTION MANAGER. CONTRACTOR SHALL SEQUENCE CONSTRUCTION TO ACCOMMODATE LOCAL TRAFFIC. MAINTAIN ONE-WAY TRAFFIC ON QUINTANA DURING INTERSECTION CONSTRUCTION TO ACCOMMODATE EMERGENCY ACCESS

LEGEND:

- DELINEATOR/CONES
- WORK ZONE
- BARRICADE
- DIRECTION OF TRAFFIC
- BARRIER

20 0 20 40 FEET
HORIZ SCALE 1"=20'



05/29/2020

DESIGN	P. WEBSTER
DRAWN	P. WEBSTER
CHECKED	T. LEWIS
APPROVED	M. FISHER

WATERWORKS ENGINEERS
2260 Douglas Blvd, Suite 100 • Roseville, CA 95661 • 916-780-2888

CITY OF MORRO BAY
WATER RECLAMATION FACILITY
LIFT STATION AND OFFSITE PIPELINES

TRAFFIC HANDLING

STAGE 13, 14, & 15

DATE	MAY 2020
PROJECT NUMBER	17-082
DRAWING NUMBER	05-TH-17
SHEET NUMBER	86

L:\CAD\PROJECTS\17-082 MORRO BAY PS AND PIPELINE_(S)\PROJECT FILES\DELIVERABLES\1782D-05TC116.DWG

25.1000

JOB NUMBER: 17-082 FILENAME: 1782D-05TC116.DWG PLOT DATE: 06/2/20 PLOT TIME: 12:27:33

CONFORMED SET - DEC 2020



NOTES:

1. THE CONTRACTOR SHALL COMPLY WITH THE GENERAL TRAFFIC CONTROL NOTES LISTED ON DWG 05-TH-01.

KEY NOTES:

1. CONTRACTOR SHALL PREPARE TRAFFIC CONTROL PLAN FOR TRAFFIC HANDLING DURING APPURTENANCE CONSTRUCTION.
2. TRAFFIC CONTROL PLAN SHALL ACCOMMODATE SINGLE PROPERTY ENTRANCES.
3. COORDINATE QUINTANA ROAD/BELLA VISTA INTERSECTION CONSTRUCTION SCHEDULE AND SEQUENCING WITH CONSTRUCTION MANAGER. CONTRACTOR SHALL SEQUENCE CONSTRUCTION TO ACCOMMODATE LOCAL TRAFFIC. MAINTAIN ONE-WAY TRAFFIC ON QUINTANA DURING INTERSECTION CONSTRUCTION TO ACCOMMODATE EMERGENCY ACCESS.

LEGEND:

- DELINEATOR/CONES
- WORK ZONE
- BARRICADE
- DIRECTION OF TRAFFIC
- BARRIER

20 0 20 40 FEET
HORIZ SCALE 1"=20'

REGISTERED PROFESSIONAL ENGINEER
MICHAEL A. FISHER
No. C67194
CIVIL
STATE OF CALIFORNIA
05/29/2020

DESIGN P. WEBSTER
DRAWN P. WEBSTER
CHECKED T. LEWIS
APPROVED M. FISHER

WATERWORKS ENGINEERS
2260 Douglas Blvd, Suite 105 • Roseville, CA 95661 • 916-780-2888

CITY OF MORRO BAY
WATER RECLAMATION FACILITY
LIFT STATION AND OFFSITE PIPELINES

TRAFFIC HANDLING
STAGE 15, 16, & 17

DATE MAY 2020
PROJECT NUMBER 17-082
DRAWING NUMBER 05-TH-18
SHEET NUMBER 87

L:\CAD\PROJECTS\17-082 MORRO BAY PS AND PIPELINE_(S)\PROJECT FILES\DELIVERABLES\1782D-05TC117.DWG

JOB NUMBER: 17-082 FILENAME: 1782D-05TC117.DWG PLOT DATE: 06/2/20 PLOT TIME: 12:28:19

CONFORMED SET - DEC 2020





NOTES:

1. THE CONTRACTOR SHALL COMPLY WITH THE GENERAL TRAFFIC CONTROL NOTES LISTED ON DWG 05-TH-01.

LEGEND:

- DELINEATOR/CONES
- WORK ZONE
- BARRICADE
- DIRECTION OF TRAFFIC
- BARRIER

20 0 20 40 FEET
HORIZ SCALE 1"=20'

DESIGN	P. WEBSTER
DRAWN	P. WEBSTER
CHECKED	T. LEWIS
APPROVED	M. FISHER

WATERWORKS ENGINEERS
2380 Douglas Blvd, Suite 105 • Roseville, CA 95661 • 916-780-2888

CITY OF MORRO BAY
WATER RECLAMATION FACILITY
LIFT STATION AND OFFSITE PIPELINES

TRAFFIC HANDLING
STAGE 18

REGISTERED PROFESSIONAL ENGINEER
TRAVIS HALEY PRICE
No. C 91194
CIVIL
STATE OF CALIFORNIA
05/29/2020

DATE	MAY 2020
PROJECT NUMBER	17-082
DRAWING NUMBER	05-TH-19
SHEET NUMBER	88

L:\CAD\PROJECTS\17-082 MORRO BAY PS AND PIPELINE_(S)\PROJECT FILES\DELIVERABLES\1782D-05TC118.DWG

JOB NUMBER: 17-082 FILENAME: 1782D-05TC118.DWG PLOT DATE: 06/2/20 PLOT TIME: 12:29:07

CONFORMED SET - DEC 2020



NOTES:

1. THE CONTRACTOR SHALL COMPLY WITH THE GENERAL TRAFFIC CONTROL NOTES LISTED ON DWG 05-TH-01.

LEGEND:

- DELINEATOR/CONES
- WORK ZONE
- BARRICADE
- DIRECTION OF TRAFFIC
- BARRIER

20 0 20 40 FEET
HORIZ SCALE 1"=20'

REGISTERED PROFESSIONAL ENGINEER
MICHAEL J. FISHER
No. C67194
CIVIL
STATE OF CALIFORNIA
05/29/2020

DESIGN P. WEBSTER
DRAWN P. WEBSTER
CHECKED T. LEWIS
APPROVED M. FISHER

WATERWORKS ENGINEERS
2260 Douglas Blvd, Suite 105 • Roseville, CA 95661 • 916-780-2888

CITY OF MORRO BAY
WATER RECLAMATION FACILITY
LIFT STATION AND OFFSITE PIPELINES

TRAFFIC HANDLING
STAGE 18, CONT'D

DATE MAY 2020
PROJECT NUMBER 17-082
DRAWING NUMBER 05-TH-20
SHEET NUMBER 89

L:\CAD\PROJECTS\17-082 MORRO BAY PS AND PIPELINE_{S}\PROJECT FILES\DELIVERABLES\1782D-05TC119.DWG

JOB NUMBER: 17-082 FILENAME: 1782D-05TC119.DWG PLOT DATE: 06/2/20 PLOT TIME: 12:30:09

CONFORMED SET - DEC 2020





NOTES:

1. THE CONTRACTOR SHALL COMPLY WITH THE GENERAL TRAFFIC CONTROL NOTES LISTED ON DWG 05-TH-01.

KEY NOTES:

1. TRAFFIC CONTROL PLAN SHALL LEAVE AT LEAST ONE PROPERTY ENTRANCE OPEN.
2. TRAFFIC CONTROL PLAN SHALL ACCOMMODATE SINGLE PROPERTY ENTRANCES.

LEGEND:

- DELINEATOR/CONES
- WORK ZONE
- BARRICADE
- DIRECTION OF TRAFFIC
- BARRIER

20 0 20 40 FEET
HORIZ SCALE 1"=20'



05/29/2020

DESIGN	P. WEBSTER
DRAWN	P. WEBSTER
CHECKED	T. LEWIS
APPROVED	M. FISHER

WATERWORKS ENGINEERS
2260 Douglas Blvd, Suite 105 • Roseville, CA 95661 • 916-780-2888

CITY OF MORRO BAY

WATER RECLAMATION FACILITY
LIFT STATION AND OFFSITE PIPELINES

TRAFFIC HANDLING

STAGE 18, CONT'D

DATE	MAY 2020
PROJECT NUMBER	17-082
DRAWING NUMBER	05-TH-21
SHEET NUMBER	90

L:\CAD\PROJECTS\17-082 MORRO BAY PS AND PIPELINE_(S)\PROJECT FILES\DELIVERABLES\1782D-05TC120.DWG

JOB NUMBER: 17-082 FILENAME: 1782D-05TC120.DWG PLOT DATE: 06/2/20 PLOT TIME: 12:43:09

CONFORMED SET - DEC 2020

NOTES:

1. THE CONTRACTOR SHALL COMPLY WITH THE GENERAL TRAFFIC CONTROL NOTES LISTED ON DWG 05-TH-01.

LEGEND:

- DELINEATOR/CONES
- WORK ZONE
- BARRICADE
- DIRECTION OF TRAFFIC
- BARRIER

QUINTANA RD

1X LANE TWO WAY TRAFFIC

MATCH LINE - 144+00 SEE SHEET O5-PP-18

066371001 QUINTANA RD STATE OF CALIFORNIA (935)

068041003

MATCH LINE - 147+50 SEE BELOW

MATCH LINE - 147+50 SEE ABOVE

SOUTH BAY BLVD

20 0 20 40 FEET

HORIZ SCALE 1"=20'

05/29/2020

DESIGN	P. WEBSTER
DRAWN	P. WEBSTER
CHECKED	T. LEWIS
APPROVED	M. FISHER

WATERWORKS ENGINEERS

2280 Douglas Blvd, Suite 100 • Roseville, CA 95661 • 916-780-2888

CITY OF MORRO BAY

WATER RECLAMATION FACILITY LIFT STATION AND OFFSITE PIPELINES

TRAFFIC HANDLING

STAGE 18, CONT'D

DATE	MAY 2020
PROJECT NUMBER	17-082
DRAWING NUMBER	05-TH-22
SHEET NUMBER	91

L:\CAD\PROJECTS\17-082 MORRO BAY PS AND PIPELINE_(S)\PROJECT FILES\DELIVERABLES\1782D-05TC121.DWG

JOB NUMBER: 17-082 FILENAME: 1782D-05TC121.DWG PLOT DATE: 06/2/20 PLOT TIME: 12:45:51

CONFORMED SET - DEC 2020

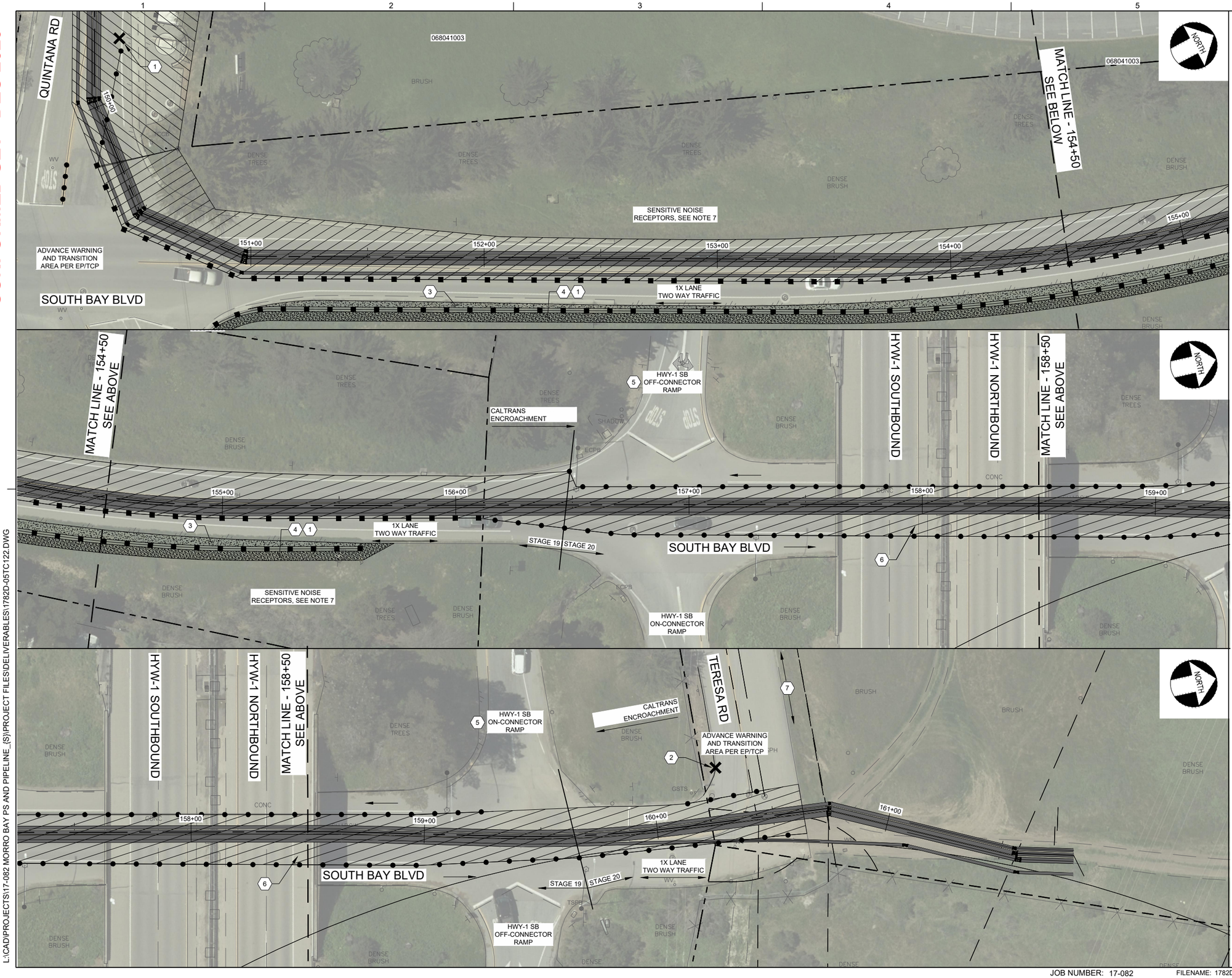

NOTES:

1. THE CONTRACTOR SHALL COMPLY WITH THE GENERAL TRAFFIC CONTROL NOTES LISTED ON DWG 05-TH-01.

KEY NOTES:

1. PEDESTRIAN AND BICYCLE TRAFFIC TO BE DIVERTED AROUND WORK ZONE TO SOUTH SIDE OF QUINTANA AND EAST SIDE OF SOUTH BAY BLVD PER EP/TCP.
2. PEDESTRIAN AND BICYCLE TRAFFIC TO BE DIVERTED AROUND WORK ZONE TO SOUTH SIDE OF SOUTH BAY BLVD PER EP/TCP.
3. INSTALL A TEMPORARY PAVED SHOULDER IF NECESSARY TO PROVIDE THE MINIMUM LANE WIDTH REQUIRED BY THE EP/TCP. THE CONTRACTOR SHALL NOTE THE PRESENCE OF CONCRETE CURB AND GUTTER FOR A PORTION OF SOUTH BAY BLVD CLOSE TO QUINTANA.
4. ACCOMMODATE PEDESTRIANS AND BICYCLE TRAFFIC PER CA MUTCD 2014 ED SECTION 6D.01 AND INSTALL/MAINTAIN A 48"W SMOOTH, CONTINUOUS HARD SURFACE AT A MAXIMUM 2% CROSS SLOPE. INSTALL 60" x 60" PASSING SPACES EVERY 200-LF.
5. THE CONTRACTOR SHALL BE AWARE THAT TEMPORARY OFF-CONNECTOR RAMP CLOSURES OR TURN LANE CLOSURES MAY BE REQUIRED PER CALTRANS EP/TCP.
6. THE CONTRACTOR SHALL BE AWARE THAT LONGITUDINAL OPEN EXCAVATION LIMITS, TEMPORARY PLATING, AND/OR NIGHT WORK MAY BE REQUIRED PER CALTRANS EP/TCP.
7. THE CONTRACTOR SHALL BE AWARE OF AMBULATORY SERVICES THAT FREQUENTLY ACCESS THE ASSISTED LIVING FACILITY AND NURSING HOME ON TERESA RD. THE CONTRACTOR SHALL COORDINATE WITH THE CONSTRUCTION MANAGER AND ACCOMMODATE TRAFFIC TO THESE FACILITIES.

LEGEND:

- DELINEATOR/CONES
- WORK ZONE
- BARRICADE
- DIRECTION OF TRAFFIC
- BARRIER
- TEMPORARY PAVED SHOULDER
- 48" PEDESTRIAN PATH

20 0 20 40 FEET
HORIZ SCALE 1"=20'

05/29/2020

DESIGN	P. WEBSTER
DRAWN	P. WEBSTER
CHECKED	T. LEWIS
APPROVED	M. FISHER

WATERWORKS ENGINEERS
2260 Douglas Blvd, Suite 105 • Roseville, CA 95661 • 916-780-2888

CITY OF MORRO BAY
WATER RECLAMATION FACILITY
LIFT STATION AND OFFSITE PIPELINES

TRAFFIC HANDLING
STAGE 19, 20, & 21

DATE	MAY 2020
PROJECT NUMBER	17-082
DRAWING NUMBER	05-TH-23
SHEET NUMBER	92

L:\CAD\PROJECTS\17-082 MORRO BAY PS AND PIPELINE_(S)\PROJECT FILES\DELIVERABLES\1782D-05TC122.DWG

JOB NUMBER: 17-082 FILENAME: 1782D-05TC122.DWG PLOT DATE: 06/2/20 PLOT TIME: 12:47:16

CONFORMED SET - DEC 2020

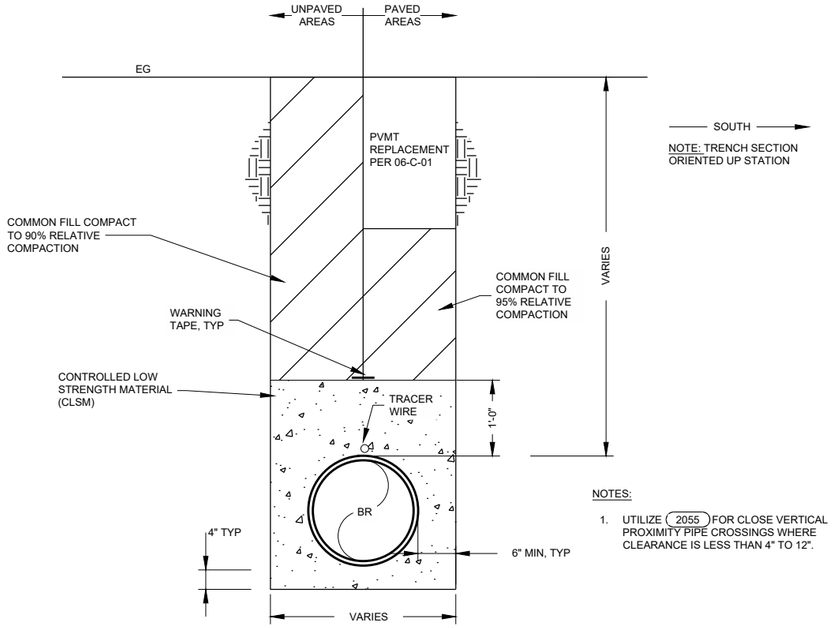

1 TYP TRENCH DETAIL: STA 10+00 TO STA 15+70

05-PP-01 NTS
05-PP-02

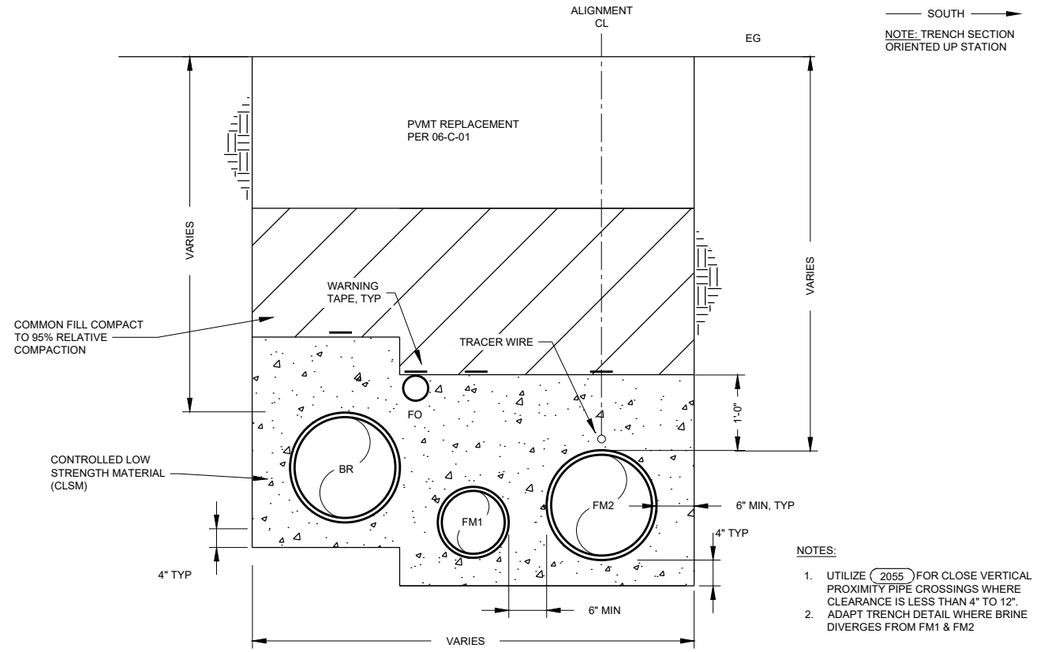

2 TYP PAVED TRENCH DETAIL: STA 15+70 TO STA 17+50

05-PP-02 NTS
05-PP-03

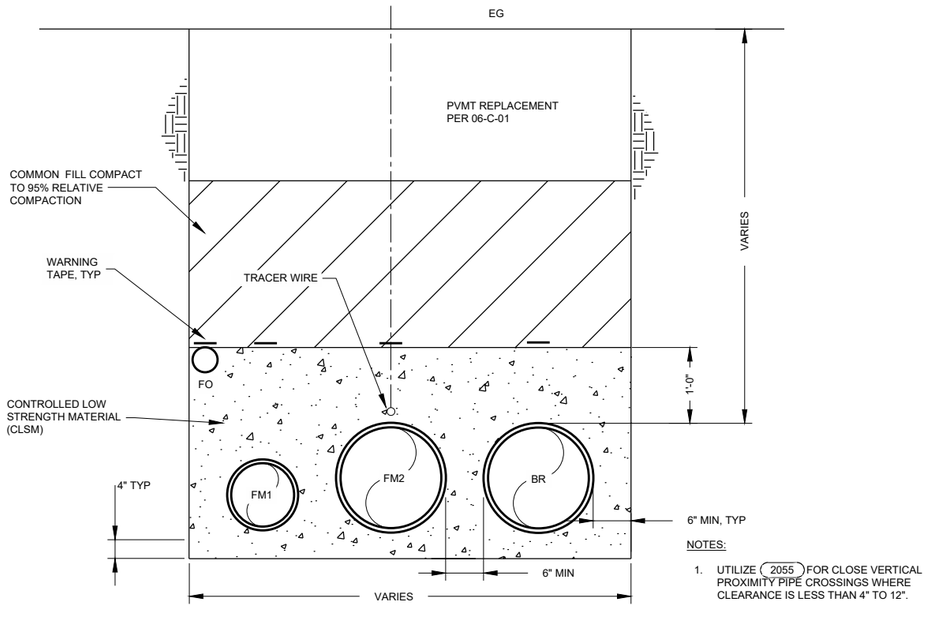

3 TYP PAVED TRENCH DETAIL: STA 17+50 TO STA 26+30

05-PP-03 NTS
05-PP-04
05-PP-05

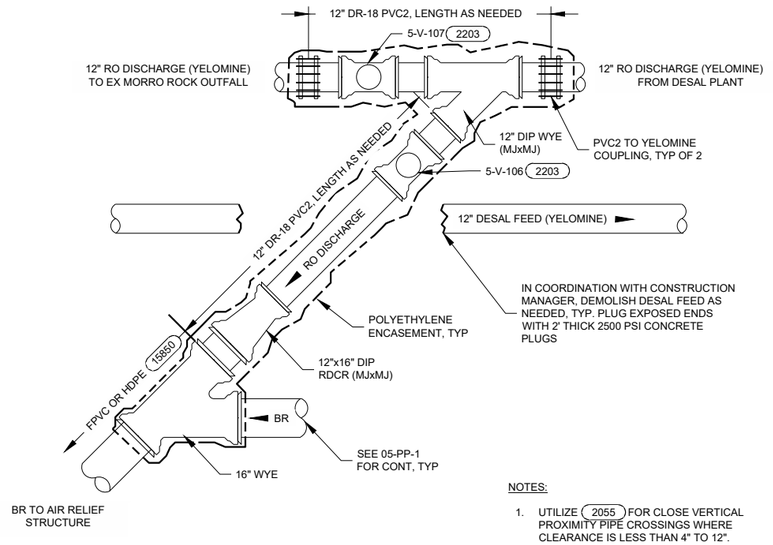

4 RO DISCHARGE TO BR CONNECTION

05-PP-01 NTS

DESIGN T LEWIS
DRAWN M KARBAKHSH
CHECKED T LEWIS
APPROVED M FISHER

WATERWORKS ENGINEERS
2260 Douglas Blvd, Suite 105 • Roseville, CA 95661 • 916-780-2888

CITY OF MORRO BAY
WATER RECLAMATION FACILITY
LIFT STATION AND OFFSITE PIPELINES

CIVIL DETAILS
TRENCH SECTIONS AND SURFACE RESTORATION
STA 10+00 TO STA 26+30

REGISTERED PROFESSIONAL ENGINEER
No. C 71194
CIVIL
STATE OF CALIFORNIA
05/29/2020

DATE MAY 2020
PROJECT NUMBER 17-082
DRAWING NUMBER 05-CD-01
SHEET NUMBER 93

L:\CAD\PROJECTS\17-082 MORRO BAY PS AND PIPELINE_(S)\PROJECT FILES\DELIVERABLES\1782-05CD01.DWG

JOB NUMBER: 17-082 FILENAME: 1782-05CD01.DWG PLOT DATE: 05/28/20 PLOT TIME: 14:23:30

CONFORMED SET - DEC 2020

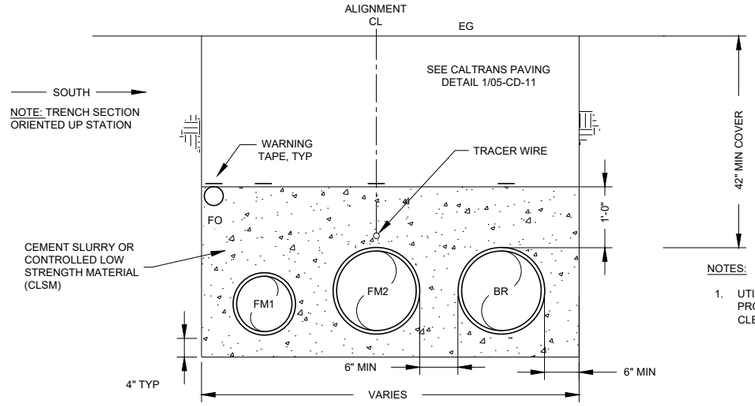

1 TYP PAVED TRENCH DETAIL STA: 26+30 TO STA 27+00
05-PP-05 NTS

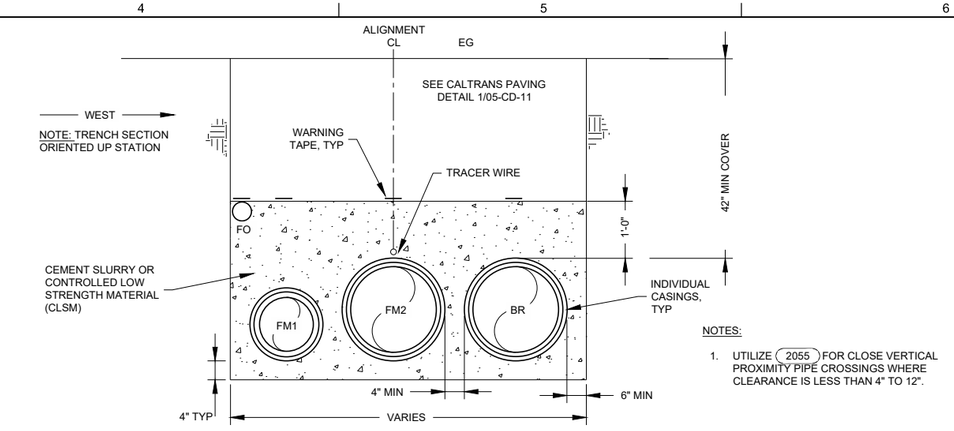

2 TYP PAVED TRENCH DETAIL W/ CASINGS STA: 27+00 TO STA 27+25
05-PP-05 NTS

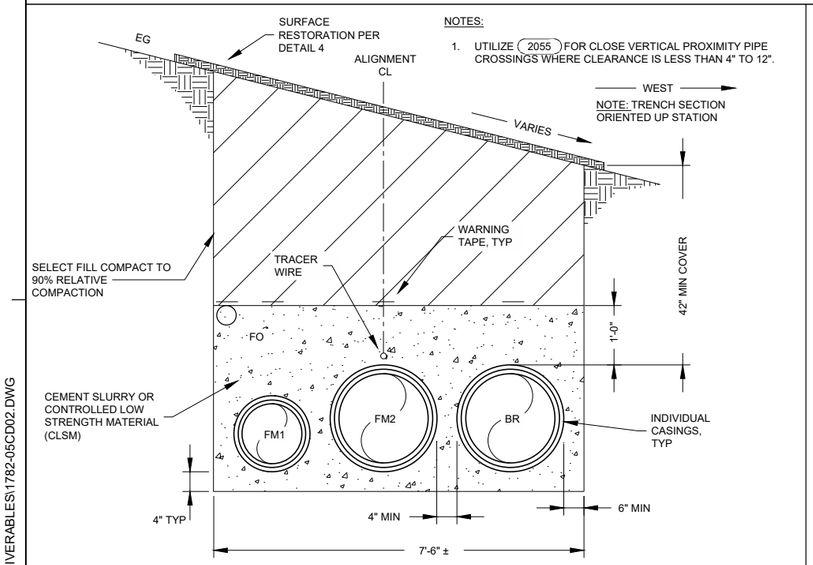

3 TYP UNPAVED TRENCH DETAIL W/ CASINGS STA:27+25 TO STA 32+50
05-PP-05 NTS
05-PP-06

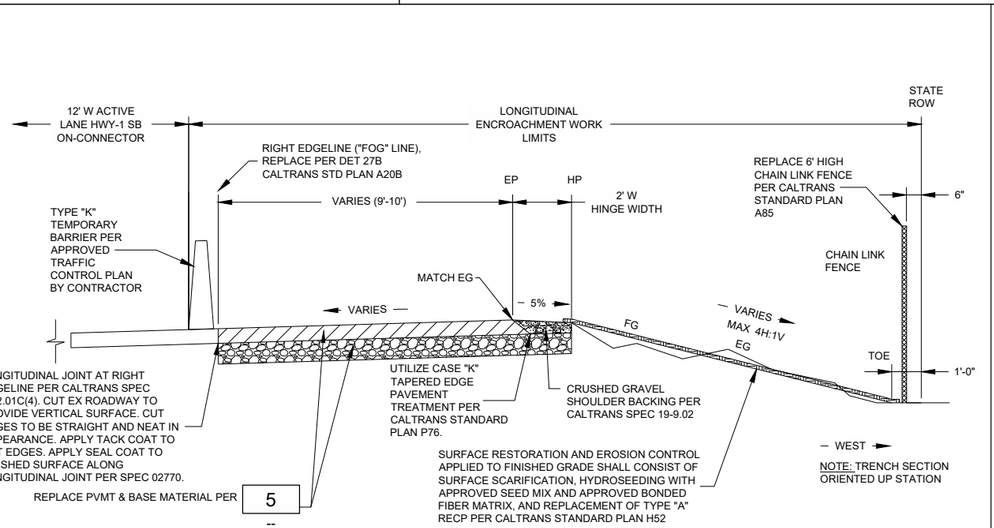

GRADING & PAVING DETAIL
HW-1 SB ON-CONNECTOR RAMP SHOULDER
4 STA:27+25 TO STA 32+35 (1)
05-PP-05 NTS
05-PP-06

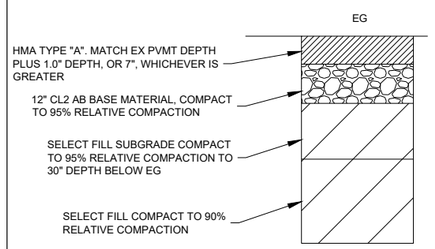

5 FLEXIBLE PAVEMENT DETAIL
- NTS

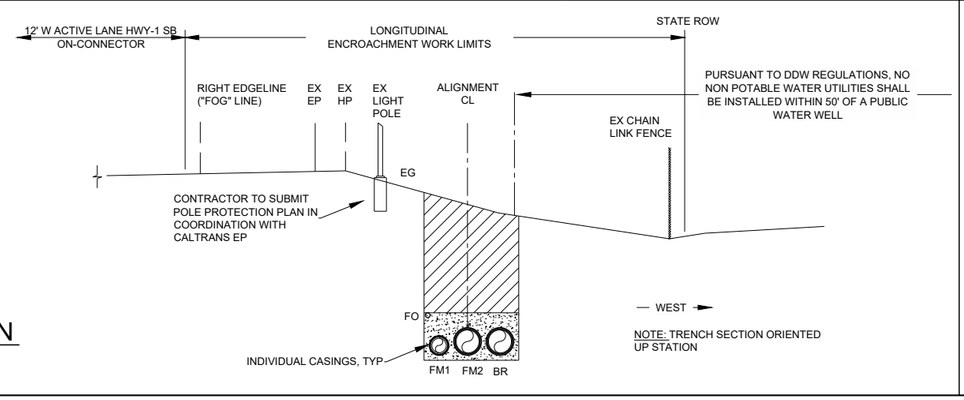

A SECTION
05-PP-05 NTS
STA 27+75

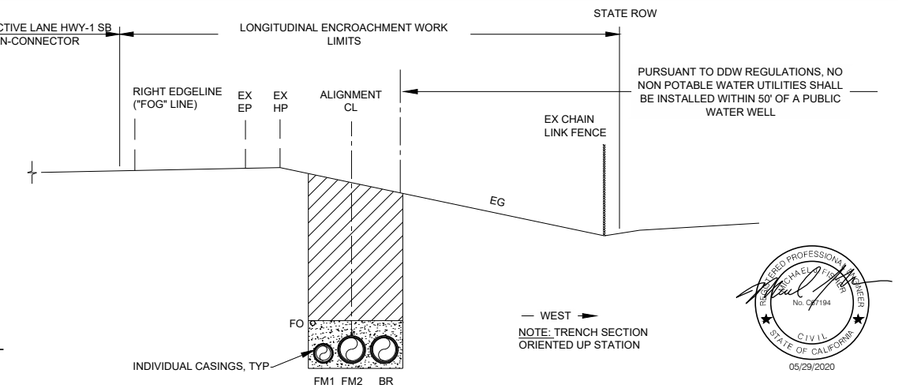

B SECTION
05-PP-06 NTS
STA 30+25

DESIGN T LEWIS
DRAWN M KARBAKHSH
CHECKED T LEWIS
APPROVED M FISHER

WATERWORKS ENGINEERS
2260 Douglas Blvd, Suite 105 • Roseville, CA 95661 • 916-780-2888

CITY OF MORRO BAY
WATER RECLAMATION FACILITY
LIFT STATION AND OFFSITE PIPELINES

CIVIL DETAILS
TRENCH SECTIONS AND SURFACE RESTORATION
STA 26+30 TO STA 32+50

REGISTERED PROFESSIONAL ENGINEER
MICHAEL J. PHILLIPS
No. C67194
CIVIL
STATE OF CALIFORNIA
05/29/2020

DATE MAY 2020
PROJECT NUMBER 17-082
DRAWING NUMBER 05-CD-02
SHEET NUMBER 94

JOB NUMBER: 17-082 FILENAME: 1782-05CD02.DWG PLOT DATE: 05/28/20 PLOT TIME: 14:24:42

L:\CAD\PROJECTS\17-082 MORRO BAY PS AND PIPELINE_(S)\PROJECT FILES\DELIVERABLES\1782-05CD02.DWG

CONFORMED SET - DEC 2020

WEST

NOTE: TRENCH SECTION ORIENTED UP STATION

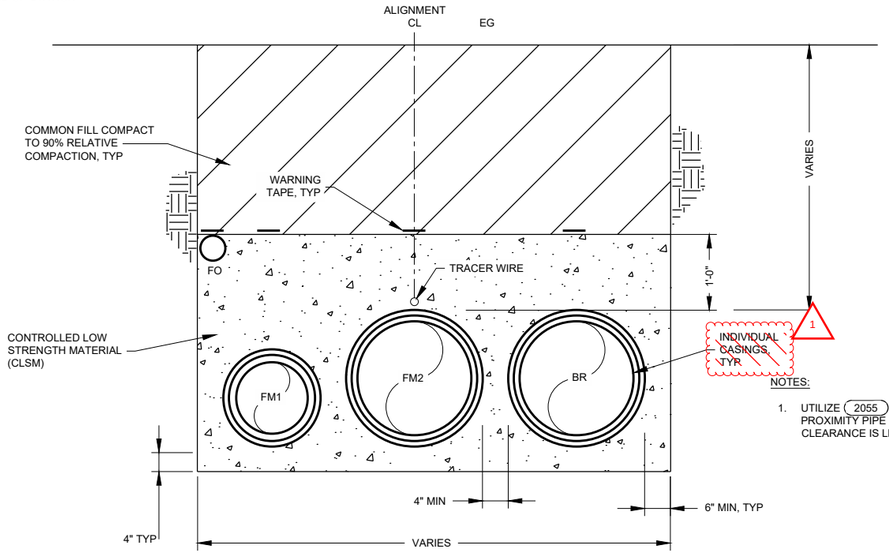

NOTES:

1. UTILIZE (2055) FOR CLOSE VERTICAL PROXIMITY PIPE CROSSINGS WHERE CLEARANCE IS LESS THAN 4" TO 12".

1 TYP TRENCH DETAIL W/ CASINGS STA: 32+50 TO STA 33+20

05-PP-06 05-PP-07 NTS

WEST

NOTE: TRENCH SECTION ORIENTED UP STATION

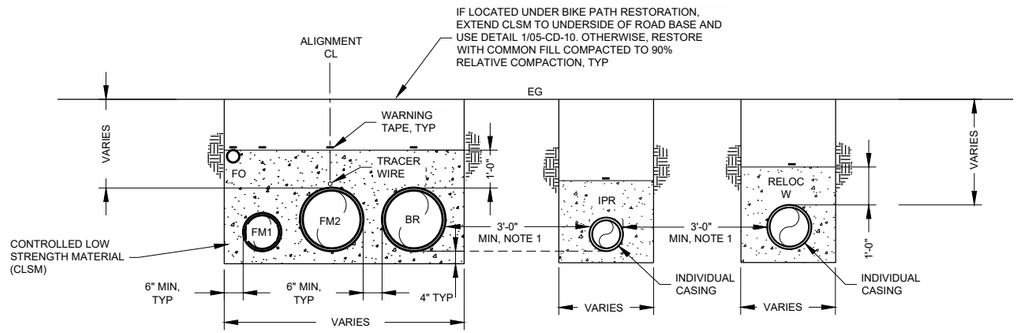

NOTES:

1. NON-ENCASED IPR MAY NOT BE INSTALLED IN SAME TRENCH AS NON-ENCASED SANITARY UTILITIES OR NON-ENCASED POTABLE WATER UTILITIES. PER PROJECT-SPECIFIC DDW PERMIT REQUIREMENTS, IPR MAY BE LOCATED A MIN 3'-0" FROM SANITARY UTILITIES IF 1'-0" VERTICAL SEPARATION IS PROVIDED. IN ADDITION, IPR MAY BE LOCATED A MIN 3'-0" AWAY FROM PARALLEL POTABLE WATER UTILITIES.
2. UTILIZE (2055) FOR CLOSE VERTICAL PROXIMITY PIPE CROSSING WHERE CLEARANCE IS LESS THAN 4" TO 12".

2 TYP TRENCH DETAIL: STA 34+80 TO STA 43+00

05-PP-06, 05-PP-07 NTS
05-PP-08, 05-PP-09

WEST

NOTE: TRENCH SECTION ORIENTED UP STATION

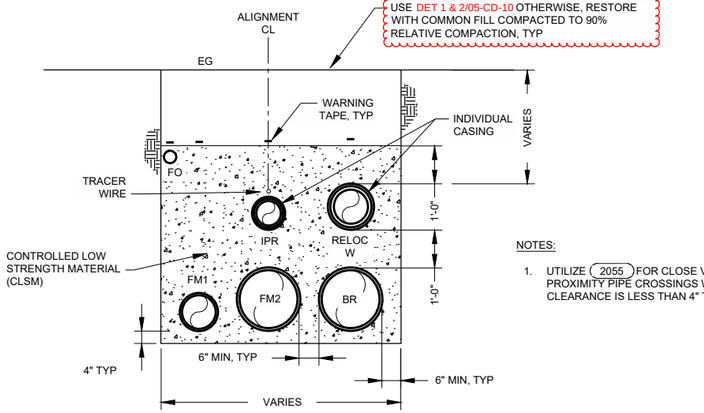

NOTES:

1. UTILIZE (2055) FOR CLOSE VERTICAL PROXIMITY PIPE CROSSINGS WHERE CLEARANCE IS LESS THAN 4" TO 12".

3 TYP TRENCH DETAIL: STA 43+00 TO STA 44+05 AND STA 47+00 TO 50+50

05-PP-09 05-PP-10 05-PP-11 NTS

WEST

NOTE: TRENCH SECTION ORIENTED UP STATION

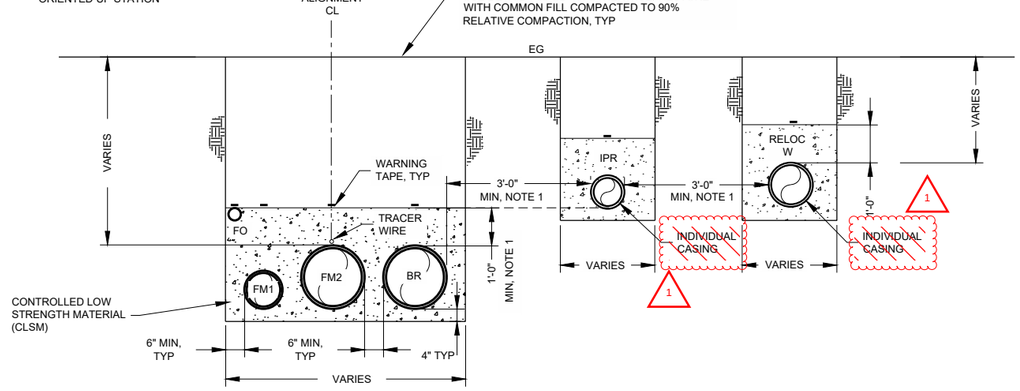

NOTES:

1. NON-ENCASED IPR MAY NOT BE INSTALLED IN SAME TRENCH AS NON-ENCASED SANITARY UTILITIES OR NON-ENCASED POTABLE WATER UTILITIES. PER PROJECT-SPECIFIC DDW PERMIT REQUIREMENTS, IPR MAY BE LOCATED A MIN 3'-0" FROM SANITARY UTILITIES IF 1'-0" VERTICAL SEPARATION IS PROVIDED. IN ADDITION, IPR MAY BE LOCATED A MIN 3'-0" AWAY FROM PARALLEL POTABLE WATER UTILITIES.
2. UTILIZE (2055) FOR CLOSE VERTICAL PROXIMITY PIPE CROSSING WHERE CLEARANCE IS LESS THAN 4" TO 12".

4 TYP PAVED TRENCH DETAIL: STA 44+00 TO STA 47+00

05-PP-06, 05-PP-07 NTS
05-PP-08, 05-PP-09
05-PP-10

REGISTERED PROFESSIONAL ENGINEER — No. C71794 — CIVIL — STATE OF CALIFORNIA
05/29/2020

DESIGN T LEWIS
DRAWN M KARBAKHSH
CHECKED T LEWIS
APPROVED M FISHER

WATERWORKS ENGINEERS
2290 Douglas Blvd, Suite 105 • Roseville, CA 95661 • 916-780-2888

CITY OF MORRO BAY
WATER RECLAMATION FACILITY
LIFT STATION AND OFFSITE PIPELINES

CIVIL DETAILS
TRENCH SECTIONS AND SURFACE RESTORATION
STA 32+00 TO STA 47+50

DATE MAY 2020
PROJECT NUMBER 17-082
DRAWING NUMBER 05-CD-03
SHEET NUMBER 95

CONFORMED SET - DEC 2020

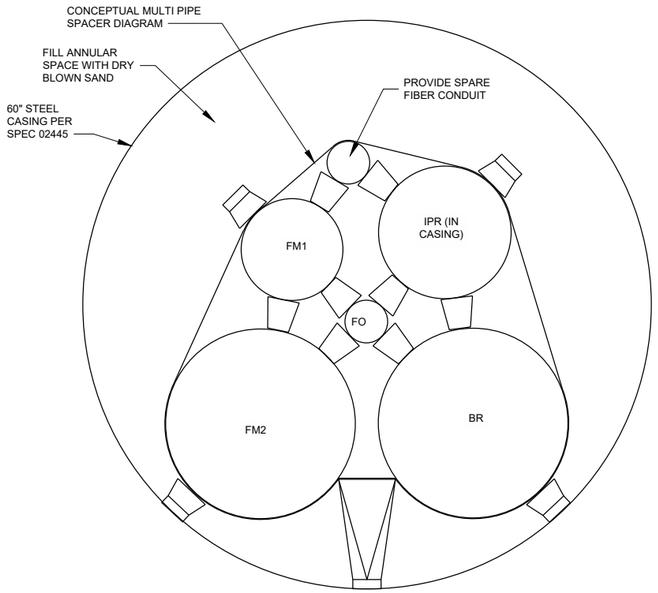

CASING SPACERS

1. CONTRACTOR SHALL INSTALL CARRIER PIPELINES IN A RIGID MULTI PIPE SPACER SYSTEM CONSISTING OF INDIVIDUAL SPACER SHELLS, STRUCTURAL RISERS, BEARING SURFACES (RUNNERS), AND REINFORCING PLATES.
2. THE SPACER ASSEMBLY SHALL BE CONFIGURED TO REDUCE ECCENTRICITY AND PROMOTE OVERALL STABILITY DURING INSTALLATION.
3. THE STRUCTURAL RISERS SHALL BE MADE OF T304 SST OF A MAXIMUM 10 GAUGE WITH BOLT HEADS WELDED TO THE INSIDE OF THE RISER FOR ADDED STRENGTH. BOTTOM RISERS 6" AND OVER IN HEIGHT SHALL BE REINFORCED WITH 10 GAUGE T304 SST AND SHALL BE MIG WELDED TO MATING PARTS. SPECIAL REINFORCING PLATES MAY BE REQUIRED TO STABILIZE AND SUPPORT THE SPACER ASSEMBLY.
4. CASING SPACERS SHALL BE A MINIMUM 12" WIDE TWO-PIECE SHELL PER PIPE MADE FROM T304 STAINLESS STEEL OF A MINIMUM 14-GAUGE THICKNESS. EACH SHELL SECTION SHALL BE LINED WITH A 0.090"T RIBBED PVC OR EPDM EXTRUSION (85-90 DUROMETER HARDNESS) AND WITH A RESTRAINING SECTION THAT OVERLAPS THE EDGES OF THE SHEEL AND PREVENTS SLIPPAGE
5. ALL WELDMENTS SHALL BE FULLY CHEMICALLY PASSIVATED IN ACCORDANCE WITH ASTM A380
6. SST 5/16"-18 BOLTS AND 5/16" SST HEX NUTS SHALL BE UTILIZED AT A MINIMUM.
7. LONGITUDINAL SPACING SHALL PER MANUFACTURER'S RECOMMENDATION, AND AT A MINIMUM SHALL BE 5-FT FOR FPVC CARRIER PIPES AND 4-FT FOR HDPE CARRIER PIPES.
8. MANUFACTURERS: CALPICO M-12-SS, ADVANCED PRODUCT SYSTEMS MODEL SSI, GPT INDUSTRIES INFRACHOICE SILVERTIPS SS, CASCADE WATERWORKS MFG CCS, BWM COMPANY SS, OR APPROVED EQUAL

QUALITY CONTROL

1. CARRIER PIPELINES SHALL BE DOCUMENTED AT THE ENDS OF THE CASINGS PRIOR TO CLOSURE OF THE CASING AND SHALL BE INSPECTED FOR LINE (CENTERED ALIGNMENT WITHIN CASING), GRADE, AND BOWING FROM DEFORMED OR FAILED SPACER ASSEMBLIES.

1 WILLOW CAMP CREEK 60" BORE AND JACK CASING

05-PP-11 NTS

WEST

NOTE: TRENCH SECTION ORIENTED UP STATION

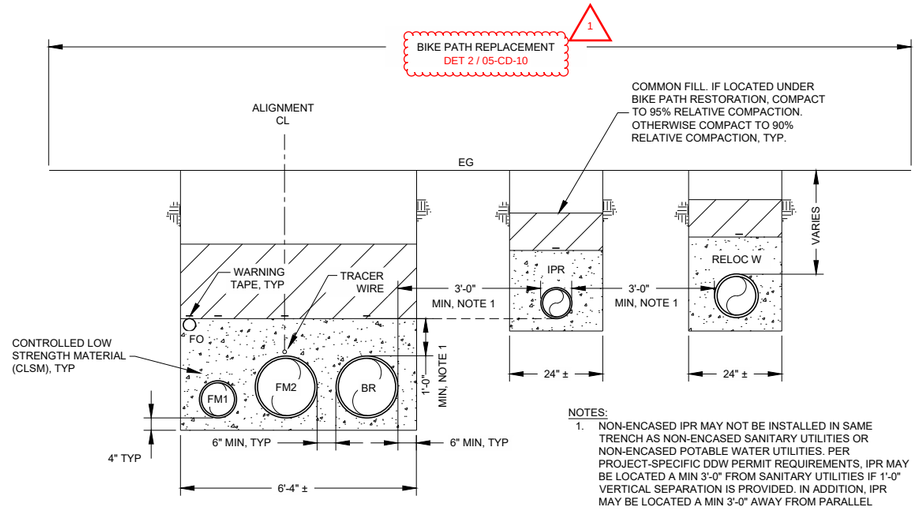

NOTES:

1. NON-ENCASED IPR MAY NOT BE INSTALLED IN SAME TRENCH AS NON-ENCASED SANITARY UTILITIES OR NON-ENCASED POTABLE WATER UTILITIES. PER PROJECT-SPECIFIC DDW PERMIT REQUIREMENTS, IPR MAY BE LOCATED A MIN 3'-0" FROM SANITARY UTILITIES IF 1'-0" VERTICAL SEPARATION IS PROVIDED. IN ADDITION, IPR MAY BE LOCATED A MIN 3'-0" AWAY FROM PARALLEL POTABLE WATER UTILITIES.
2. UTILIZE (2055) FOR CLOSE VERTICAL PROXIMITY PIPE CROSSING WHERE CLEARANCE IS LESS THAN 4" TO 12".

2 TYP TRENCH DETAIL STA: 51+90 TO STA 53+50

05-PP-11 NTS
05-PP-12

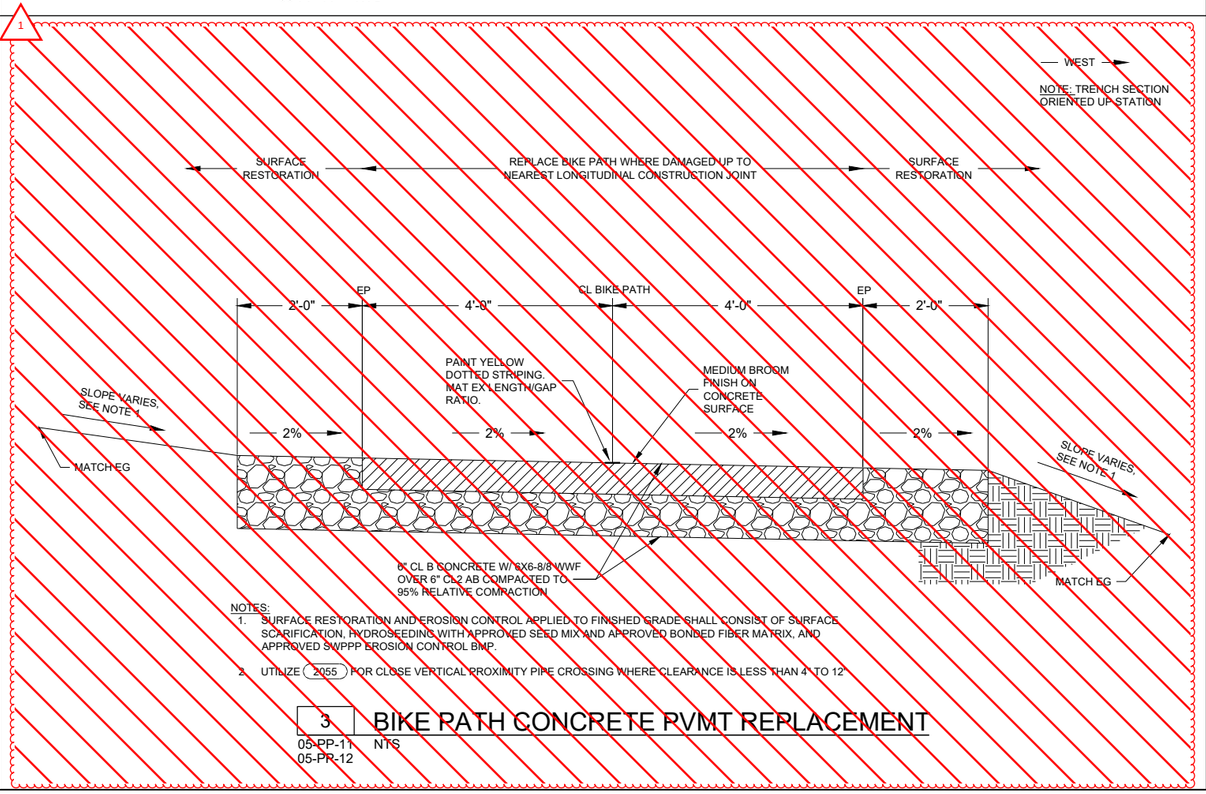

NOTES:

1. SURFACE RESTORATION AND EROSION CONTROL APPLIED TO FINISHED GRADE SHALL CONSIST OF SURFACE SCARIFICATION, HYDROSEEDING WITH APPROVED SEED MIX AND APPROVED BONDED FIBER MATRIX, AND APPROVED SWPPP EROSION CONTROL BMP.
2. UTILIZE (2055) FOR CLOSE VERTICAL PROXIMITY PIPE CROSSING WHERE CLEARANCE IS LESS THAN 4" TO 12"

3 BIKE PATH CONCRETE PVMT REPLACEMENT

05-PP-11 NTS
05-PP-12

WEST

NOTE: TRENCH SECTION ORIENTED UP STATION

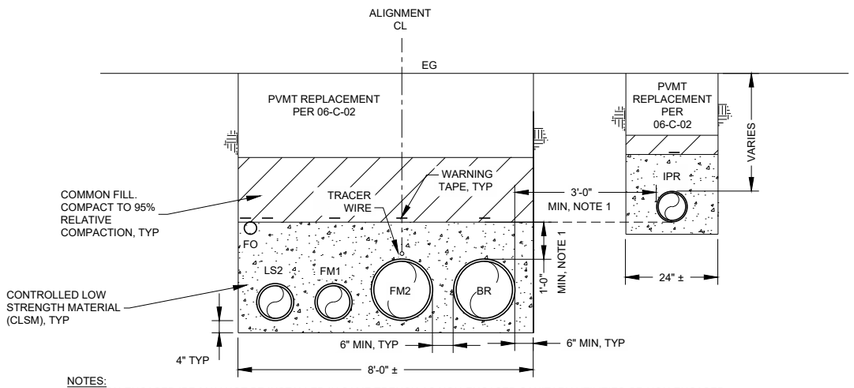

NOTES:

1. NON-ENCASED IPR MAY NOT BE INSTALLED IN SAME TRENCH AS NON-ENCASED SANITARY UTILITIES OR NON-ENCASED POTABLE WATER UTILITIES. PER PROJECT-SPECIFIC DDW PERMIT REQUIREMENTS, IPR MAY BE LOCATED A MIN 3'-0" FROM SANITARY UTILITIES IF 1'-0" VERTICAL SEPARATION IS PROVIDED. IN ADDITION, IPR MAY BE LOCATED A MIN 3'-0" AWAY FROM PARALLEL POTABLE WATER UTILITIES.
2. CUT EX ROADWAY TO PROVIDE VERTICAL SURFACES. CUT EDGES TO BE STRAIGHT AND NEAT IN APPEARANCE. APPLY TACK COAT TO CUT EDGES. APPLY SEAL COAT TO FINISHED SURFACE ALONG LONGITUDINAL JOINT PER SPEC 02770.
3. UTILIZE (2055) FOR CLOSE VERTICAL PROXIMITY PIPE CROSSING WHERE CLEARANCE IS LESS THAN 4" TO 12"

4 TYP PAVED TRENCH DETAIL STA: 53+50 TO STA 56+80

05-PP-12 NTS

REGISTERED PROFESSIONAL ENGINEER — MICHAEL P. FISHER — No. C 67194 — CIVIL — STATE OF CALIFORNIA
05/29/2020

DESIGN T LEWIS
DRAWN M KARBAKHSH
CHECKED T LEWIS
APPROVED M FISHER

WATERWORKS ENGINEERS
2290 Douglas Blvd, Suite 105 • Roseville, CA 95661 • 916-780-2888

CITY OF MORRO BAY
WATER RECLAMATION FACILITY
LIFT STATION AND OFFSITE PIPELINES

CIVIL DETAILS
TRENCH SECTIONS AND SURFACE RESTORATION
STA 51+90 TO STA 56+80

DATE MAY 2020
PROJECT NUMBER 17-082
DRAWING NUMBER 05-CD-04
SHEET NUMBER 96

L:\CAD\PROJECTS\17-082 MORRO BAY PS AND PIPELINE_{S}\PROJECT FILES\DELIVERABLES\1782-05CD04.DWG

JOB NUMBER: JOB_NO FILENAME: 1782-05CD04.DWG PLOT DATE: 05/28/20 PLOT TIME: 14:27:37

CONFORMED SET - DEC 2020

WEST

NOTE: TRENCH SECTION ORIENTED UP STATION

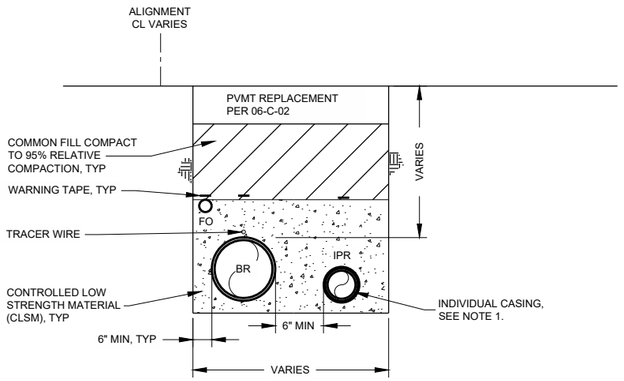

NOTES:

1. NON-ENCASED IPR MAY NOT BE INSTALLED IN SAME TRENCH AS NON-ENCASED SANITARY UTILITIES OR NON-ENCASED POTABLE WATER UTILITIES. PER PROJECT-SPECIFIC DDW PERMIT REQUIREMENTS, IPR MAY BE LOCATED A MIN 3'-0" FROM SANITARY UTILITIES IF 1'-0" VERTICAL SEPARATION IS PROVIDED. IN ADDITION, IPR MAY BE LOCATED A MIN 3'-0" AWAY FROM PARALLEL POTABLE WATER UTILITIES.
2. UTILIZE (2055) FOR CLOSE VERTICAL PROXIMITY PIPE CROSSING WHERE CLEARANCE IS LESS THAN 4" TO 12".
3. ADAPT DETAIL AND TRANSITION IPR INTO SEPARATE TRENCH WITH PROPER VERTICAL AND HORIZONTAL CLEARANCES CONSISTENT PER NOTE 1 PRIOR TO TERMINATING IPR CASING.

1 TYP PAVED TRENCH DETAIL: STA 56+75 TO STA 58+30

05-PP-12 NTS
05-PP-13

WEST

NOTE: TRENCH SECTION ORIENTED UP STATION

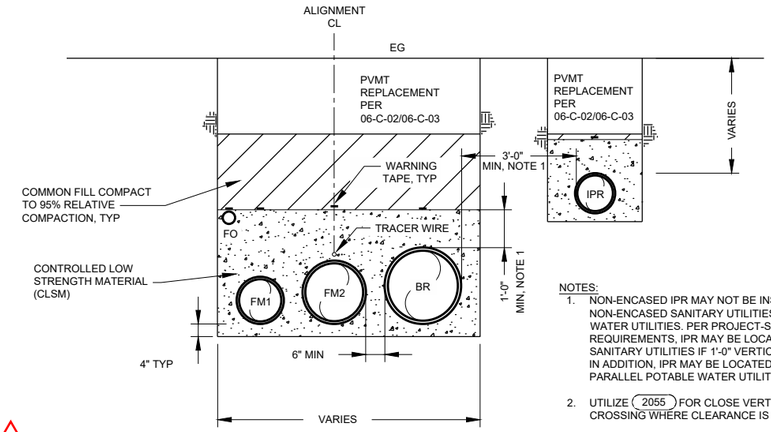

NOTES:

1. NON-ENCASED IPR MAY NOT BE INSTALLED IN SAME TRENCH AS NON-ENCASED SANITARY UTILITIES OR NON-ENCASED POTABLE WATER UTILITIES. PER PROJECT-SPECIFIC DDW PERMIT REQUIREMENTS, IPR MAY BE LOCATED A MIN 3'-0" FROM SANITARY UTILITIES IF 1'-0" VERTICAL SEPARATION IS PROVIDED. IN ADDITION, IPR MAY BE LOCATED A MIN 3'-0" AWAY FROM PARALLEL POTABLE WATER UTILITIES.
2. UTILIZE (2055) FOR CLOSE VERTICAL PROXIMITY PIPE CROSSING WHERE CLEARANCE IS LESS THAN 4" TO 12".

1

TYP PAVED TRENCH DETAIL: STA 58+30 TO STA 60+00
2 AND STA 64+30 TO STA 71+90 AND STA 82+05 TO STA 96+00

05-PP-13, 05-PP-14 NTS
05-PP-20, 05-PP-21
05-PP-22

WEST

NOTE: TRENCH SECTION ORIENTED UP STATION

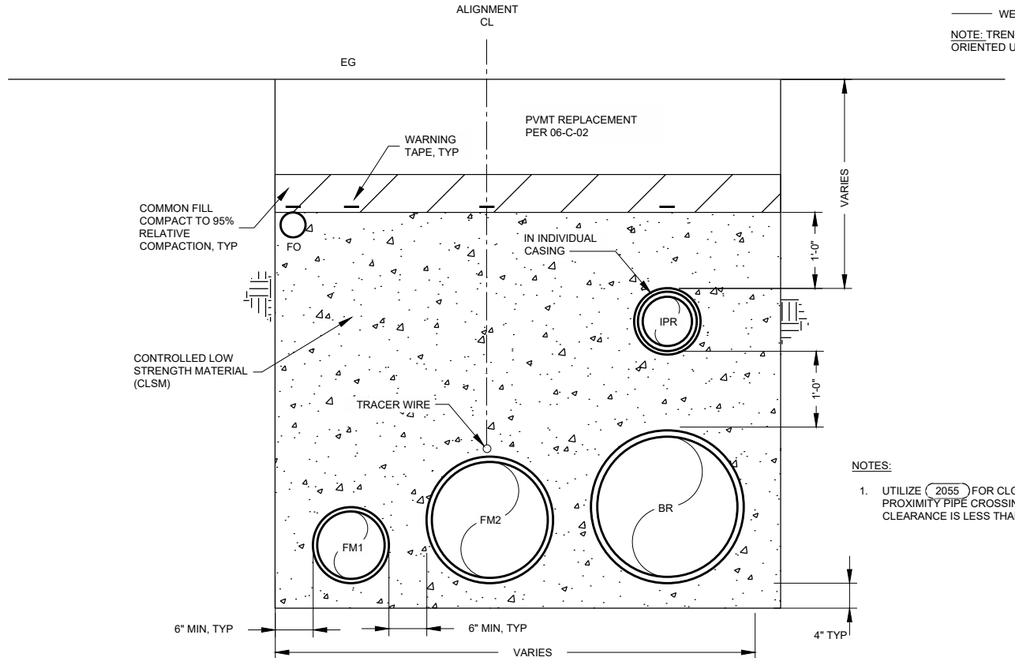

NOTES:

1. UTILIZE (2055) FOR CLOSE VERTICAL PROXIMITY PIPE CROSSINGS WHERE CLEARANCE IS LESS THAN 4" TO 12".

3 TYP PAVED TRENCH DETAIL: STA 60+00 TO STA 64+40

05-PP-13 NTS
05-PP-14

WEST

NOTE: TRENCH SECTION ORIENTED UP STATION

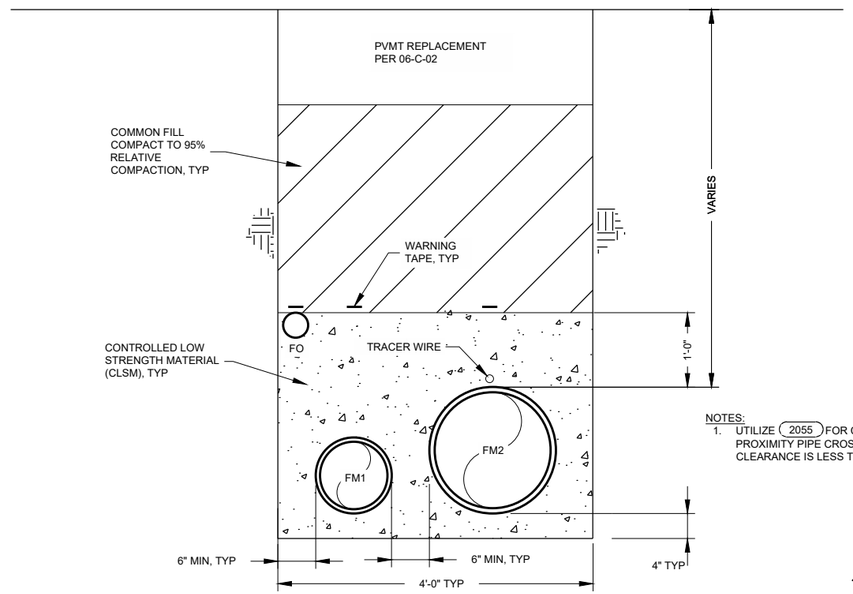

NOTES:

1. UTILIZE (2055) FOR CLOSE VERTICAL PROXIMITY PIPE CROSSINGS WHERE CLEARANCE IS LESS THAN 4" TO 12".

4 TYP PAVED TRENCH DETAIL

05-PP-13 NTS

REGISTERED PROFESSIONAL ENGINEER
MICHAEL FISHER
No. C61194
CIVIL
STATE OF CALIFORNIA
05/29/2020

DESIGN T LEWIS
DRAWN M KARBAKHSH
CHECKED T LEWIS
APPROVED M FISHER

WATERWORKS ENGINEERS
2260 Douglas Blvd, Suite 105 • Roseville, CA 95661 • 916-780-2888

CITY OF MORRO BAY
WATER RECLAMATION FACILITY
LIFT STATION AND OFFSITE PIPELINES

CIVIL DETAILS
TRENCH SECTIONS AND SURFACE RESTORATION
STA 56+75 TO STA 64+30

DATE MAY 2020
PROJECT NUMBER 17-082
DRAWING NUMBER 05-CD-05
SHEET NUMBER 97

L:\CAD\PROJECTS\17-082 MORRO BAY PS AND PIPELINE_(S)\PROJECT FILES\DELIVERABLES\11782-05CD05.DWG

JOB NUMBER: 17-082 FILENAME: 1782-05CD05.DWG PLOT DATE: 05/28/20 PLOT TIME: 14:28:46

CONFORMED SET - DEC 2020

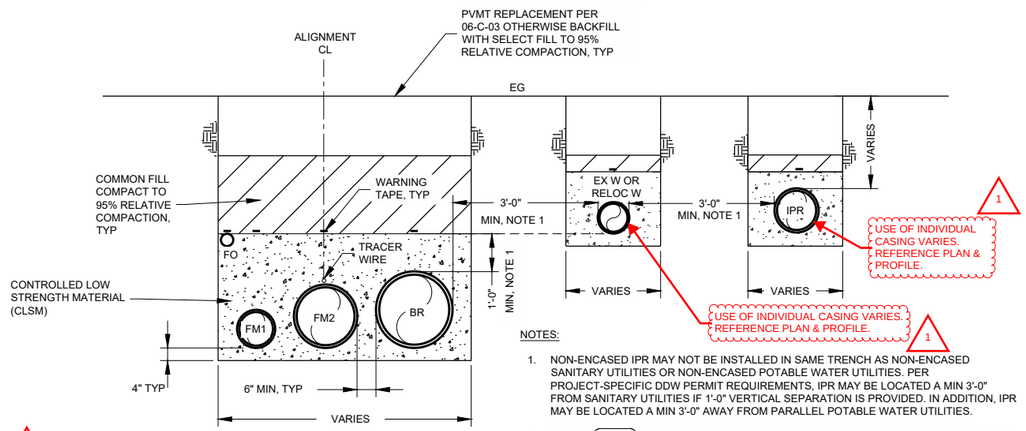

NOTES:

1. NON-ENCASED IPR MAY NOT BE INSTALLED IN SAME TRENCH AS NON-ENCASED SANITARY UTILITIES OR NON-ENCASED POTABLE WATER UTILITIES. PER PROJECT-SPECIFIC DDW PERMIT REQUIREMENTS, IPR MAY BE LOCATED A MIN 3'-0" FROM SANITARY UTILITIES IF 1'-0" VERTICAL SEPARATION IS PROVIDED. IN ADDITION, IPR MAY BE LOCATED A MIN 3'-0" AWAY FROM PARALLEL POTABLE WATER UTILITIES.
2. UTILIZE (2055) FOR CLOSE VERTICAL PROXIMITY PIPE CROSSING WHERE CLEARANCE IS LESS THAN 4" TO 12".

1

1 TYP PAVED TRENCH DETAIL: STA 71+95 TO STA 82+05

05-PP-16, 05-PP-17 NTS
05-PP-18, 05-PP-19

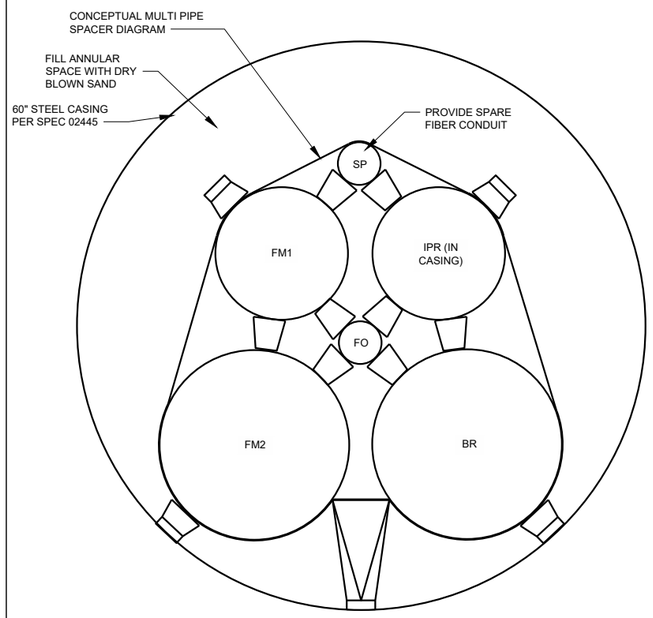

CASING SPACERS

1. CONTRACTOR SHALL INSTALL CARRIER PIPELINES IN A RIGID MULTI PIPE SPACER SYSTEM CONSISTING OF INDIVIDUAL SPACER SHELLS, STRUCTURAL RISERS, BEARING SURFACES (RUNNERS), AND REINFORCING PLATES.
2. THE SPACER ASSEMBLY SHALL BE CONFIGURED TO REDUCE ECCENTRICITY AND PROMOTE OVERALL STABILITY DURING INSTALLATION.
3. THE STRUCTURAL RISERS SHALL BE MADE OF T304 SST OF A MAXIMUM 10 GAUGE WITH BOLT HEADS WELDED TO THE INSIDE OF THE RISER FOR ADDED STRENGTH. BOTTOM RISERS 6" AND OVER IN HEIGHT SHALL BE REINFORCED WITH 10 GAUGE T304 SST AND SHALL BE MIG WELDED TO MATING PARTS. SPECIAL REINFORCING PLATES MAY BE REQUIRED TO STABILIZE AND SUPPORT THE SPACER ASSEMBLY.
4. CASING SPACERS SHALL BE A MINIMUM 12" WIDE TWO-PIECE SHELL PER PIPE MADE FROM T304 STAINLESS STEEL OF A MINIMUM 14-GAUGE THICKNESS. EACH SHELL SECTION SHALL BE LINED WITH A 0.090"T RIBBED PVC OR EPDM EXTRUSION (85-90 DUROMETER HARDNESS) AND WITH A RESTRAINING SECTION THAT OVERLAPS THE EDGES OF THE SHEEL AND PREVENTS SLIPPAGE
5. ALL WELDMENTS SHALL BE FULLY CHEMICALLY PASSIVATED IN ACCORDANCE WITH ASTM A380
6. SST 5/16"-18 BOLTS AND 5/16" SST HEX NUTS SHALL BE UTILIZED AT A MINIMUM.
7. LONGITUDINAL SPACING SHALL PER MANUFACTURER'S RECOMMENDATION, AND AT A MINIMUM SHALL BE 5-FT FOR FPVC CARRIER PIPES AND 4-FT FOR HDPE CARRIER PIPES.
8. MANUFACTURERS: CALPICO M-12-SS, ADVANCED PRODUCT SYSTEMS MODEL SSI, GPT INDUSTRIES INFRACHOICE SILVERTIPS SS, CASCADE WATERWORKS MFG CCS, BWM COMPANY SS, OR APPROVED EQUAL

QUALITY CONTROL

1. CARRIER PIPELINES SHALL BE DOCUMENTED AT THE ENDS OF THE CASINGS PRIOR TO CLOSURE OF THE CASING AND SHALL BE INSPECTED FOR LINE (CENTERED ALIGNMENT WITHIN CASING), GRADE, AND BOWING FROM DEFORMED OR FAILED SPACER ASSEMBLIES.

2 ROUNDABOUT 60" MICROTUNNELING CASING

05-PP-22, 05-PP-23 NTS

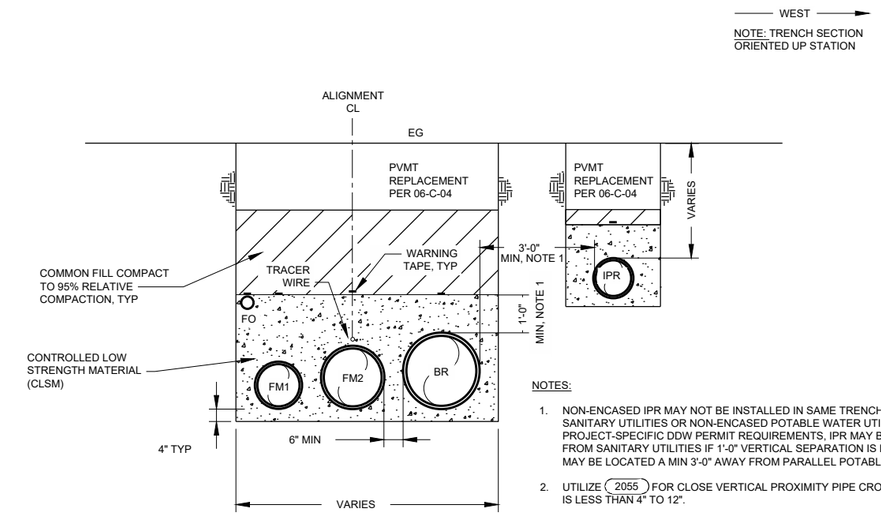

NOTES:

1. NON-ENCASED IPR MAY NOT BE INSTALLED IN SAME TRENCH AS NON-ENCASED SANITARY UTILITIES OR NON-ENCASED POTABLE WATER UTILITIES. PER PROJECT-SPECIFIC DDW PERMIT REQUIREMENTS, IPR MAY BE LOCATED A MIN 3'-0" FROM SANITARY UTILITIES IF 1'-0" VERTICAL SEPARATION IS PROVIDED. IN ADDITION, IPR MAY BE LOCATED A MIN 3'-0" AWAY FROM PARALLEL POTABLE WATER UTILITIES.
2. UTILIZE (2055) FOR CLOSE VERTICAL PROXIMITY PIPE CROSSING WHERE CLEARANCE IS LESS THAN 4" TO 12".

1

3 TYP PAVED TRENCH DETAIL: STA 99+70 TO STA 120+50

05-PP-23, 05-PP-24 NTS
05-PP-25, 05-PP-26
05-PP-27, 05-PP-28



05/29/2020

DESIGN T LEWIS
DRAWN M KARBAKHSH
CHECKED T LEWIS
APPROVED M FISHER

WATERWORKS ENGINEERS
2260 Douglas Blvd, Suite 105 • Roseville, CA 95661 • 916-780-2888

CITY OF MORRO BAY
WATER RECLAMATION FACILITY
LIFT STATION AND OFFSITE PIPELINES

CIVIL DETAILS
TRENCH SECTIONS AND SURFACE RESTORATION
STA 72+20 TO STA 120+50

DATE MAY 2020
PROJECT NUMBER 17-082
DRAWING NUMBER 05-CD-06
SHEET NUMBER 98

CONFORMED SET - DEC 2020

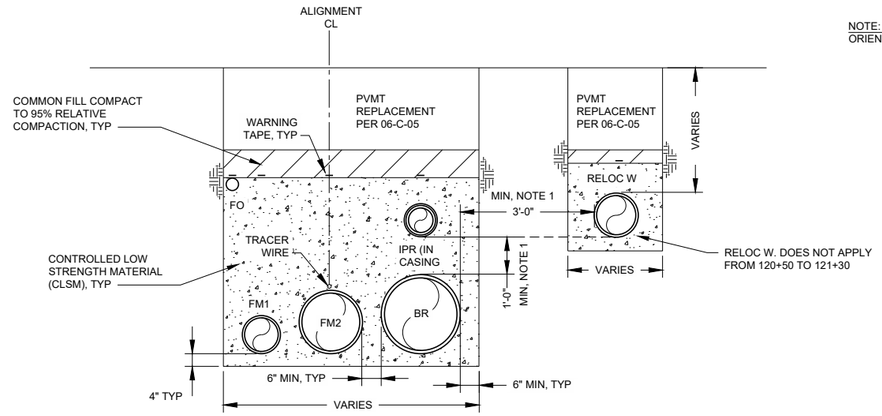

NOTE: TRENCH SECTION ORIENTED UP STATION

NOTES:
1. NON-ENCASED IPR MAY NOT BE INSTALLED IN SAME TRENCH AS NON-ENCASED SANITARY UTILITIES OR NON-ENCASED POTABLE WATER UTILITIES. PER PROJECT-SPECIFIC DDW PERMIT REQUIREMENTS, IPR MAY BE LOCATED A MIN 3'-0" FROM SANITARY UTILITIES IF 1'-0" VERTICAL SEPARATION IS PROVIDED. IN ADDITION, IPR MAY BE LOCATED A MIN 3'-0" AWAY FROM PARALLEL POTABLE WATER UTILITIES.
2. UTILIZE (2055) FOR CLOSE VERTICAL PROXIMITY PIPE CROSSING WHERE CLEARANCE IS LESS THAN 4" TO 12".

1 TYP PAVED TRENCH DETAIL: STA 120+50 TO STA 126+30

05-PP-29, 05-PP-30 NTS

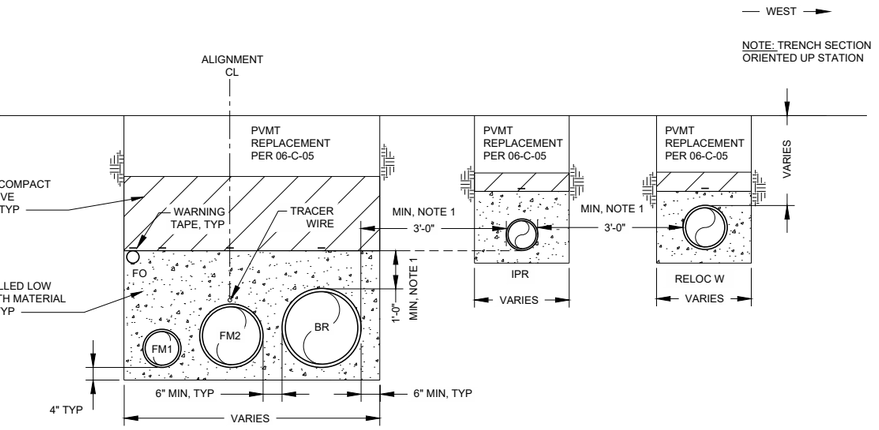

NOTE: TRENCH SECTION ORIENTED UP STATION

NOTES:
1. NON-ENCASED IPR MAY NOT BE INSTALLED IN SAME TRENCH AS NON-ENCASED SANITARY UTILITIES OR NON-ENCASED POTABLE WATER UTILITIES. PER PROJECT-SPECIFIC DDW PERMIT REQUIREMENTS, IPR MAY BE LOCATED A MIN 3'-0" FROM SANITARY UTILITIES IF 1'-0" VERTICAL SEPARATION IS PROVIDED. IN ADDITION, IPR MAY BE LOCATED A MIN 3'-0" AWAY FROM PARALLEL POTABLE WATER UTILITIES.
2. UTILIZE (2055) FOR CLOSE VERTICAL PROXIMITY PIPE CROSSING WHERE CLEARANCE IS LESS THAN 4" TO 12".

2 TYP PAVED TRENCH DETAIL: STA 126+30 TO STA 150+50

05-PP-32, 05-PP-33 NTS
05-PP-34, 05-PP-35
05-PP-36

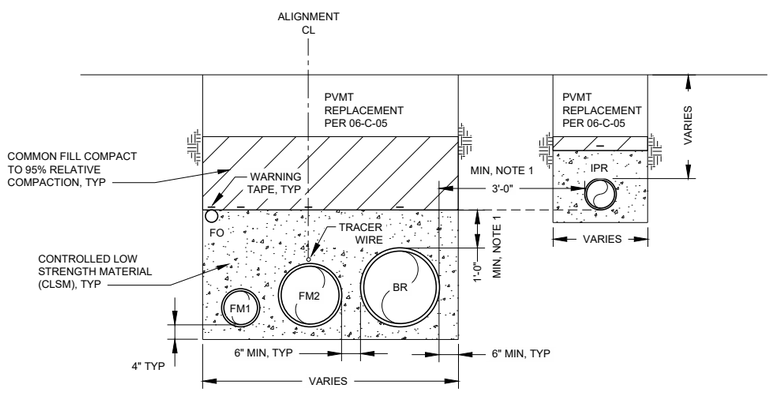

NOTE: TRENCH SECTION ORIENTED UP STATION

NOTES:
1. NON-ENCASED IPR MAY NOT BE INSTALLED IN SAME TRENCH AS NON-ENCASED SANITARY UTILITIES OR NON-ENCASED POTABLE WATER UTILITIES. PER PROJECT-SPECIFIC DDW PERMIT REQUIREMENTS, IPR MAY BE LOCATED A MIN 3'-0" FROM SANITARY UTILITIES IF 1'-0" VERTICAL SEPARATION IS PROVIDED. IN ADDITION, IPR MAY BE LOCATED A MIN 3'-0" AWAY FROM PARALLEL POTABLE WATER UTILITIES.
2. UTILIZE (2055) FOR CLOSE VERTICAL PROXIMITY PIPE CROSSING WHERE CLEARANCE IS LESS THAN 4" TO 12".

3 TYP PAVED TRENCH DETAIL: STA 150+50 TO STA 155+80

05-PP-36, 05-PP-37 NTS



05/29/2020

DESIGN T LEWIS
DRAWN M KARBAKHSH
CHECKED T LEWIS
APPROVED M FISHER

WATERWORKS ENGINEERS
2260 Douglas Blvd, Suite 105 • Roseville, CA 95661 • 916-780-2888

CITY OF MORRO BAY
WATER RECLAMATION FACILITY
LIFT STATION AND OFFSITE PIPELINES

CIVIL DETAILS
TRENCH SECTIONS AND SURFACE RESTORATION
STA 120+50 TO STA 155+80

DATE MAY 2020
PROJECT NUMBER 17-082
DRAWING NUMBER 05-CD-07
SHEET NUMBER 99

CONFORMED SET - DEC 2020

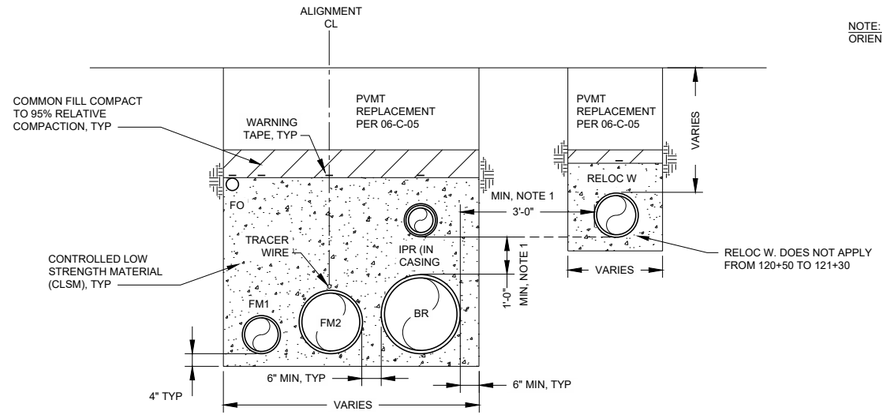

NOTE: TRENCH SECTION ORIENTED UP STATION

NOTES:
1. NON-ENCASED IPR MAY NOT BE INSTALLED IN SAME TRENCH AS NON-ENCASED SANITARY UTILITIES OR NON-ENCASED POTABLE WATER UTILITIES. PER PROJECT-SPECIFIC DDW PERMIT REQUIREMENTS, IPR MAY BE LOCATED A MIN 3'-0" FROM SANITARY UTILITIES IF 1'-0" VERTICAL SEPARATION IS PROVIDED. IN ADDITION, IPR MAY BE LOCATED A MIN 3'-0" AWAY FROM PARALLEL POTABLE WATER UTILITIES.
2. UTILIZE (2055) FOR CLOSE VERTICAL PROXIMITY PIPE CROSSING WHERE CLEARANCE IS LESS THAN 4" TO 12".

1 TYP PAVED TRENCH DETAIL: STA 120+50 TO STA 126+30

05-PP-29
05-PP-30

NTS

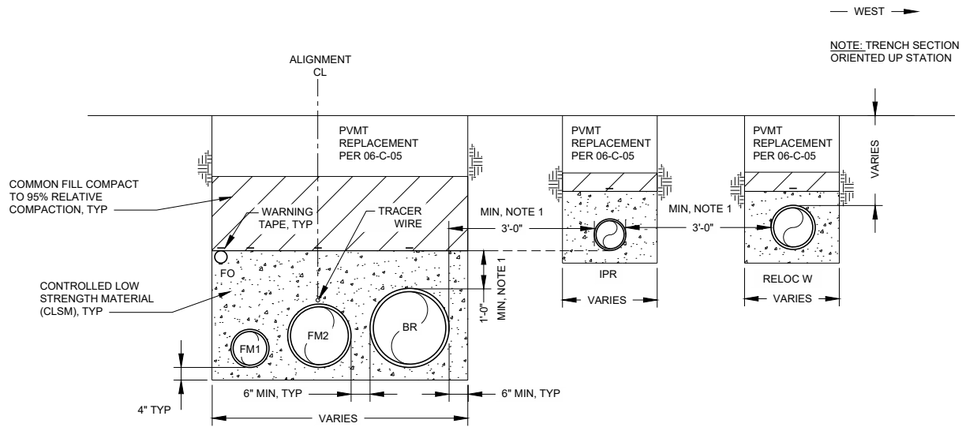

NOTE: TRENCH SECTION ORIENTED UP STATION

NOTES:
1. NON-ENCASED IPR MAY NOT BE INSTALLED IN SAME TRENCH AS NON-ENCASED SANITARY UTILITIES OR NON-ENCASED POTABLE WATER UTILITIES. PER PROJECT-SPECIFIC DDW PERMIT REQUIREMENTS, IPR MAY BE LOCATED A MIN 3'-0" FROM SANITARY UTILITIES IF 1'-0" VERTICAL SEPARATION IS PROVIDED. IN ADDITION, IPR MAY BE LOCATED A MIN 3'-0" AWAY FROM PARALLEL POTABLE WATER UTILITIES.
2. UTILIZE (2055) FOR CLOSE VERTICAL PROXIMITY PIPE CROSSING WHERE CLEARANCE IS LESS THAN 4" TO 12".

1

2 TYP PAVED TRENCH DETAIL: STA 126+30 TO STA 150+50

05-PP-30, 05-PP-31
05-PP-32, 05-PP-33
05-PP-34, 05-PP-35
05-PP-36

NTS

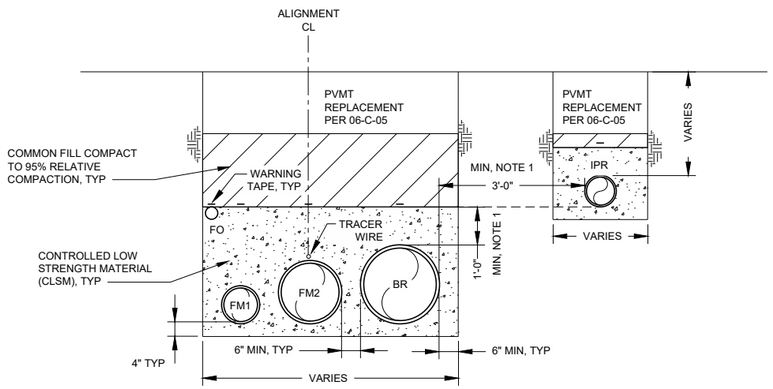

NOTE: TRENCH SECTION ORIENTED UP STATION

NOTES:
1. NON-ENCASED IPR MAY NOT BE INSTALLED IN SAME TRENCH AS NON-ENCASED SANITARY UTILITIES OR NON-ENCASED POTABLE WATER UTILITIES. PER PROJECT-SPECIFIC DDW PERMIT REQUIREMENTS, IPR MAY BE LOCATED A MIN 3'-0" FROM SANITARY UTILITIES IF 1'-0" VERTICAL SEPARATION IS PROVIDED. IN ADDITION, IPR MAY BE LOCATED A MIN 3'-0" AWAY FROM PARALLEL POTABLE WATER UTILITIES.
2. UTILIZE (2055) FOR CLOSE VERTICAL PROXIMITY PIPE CROSSING WHERE CLEARANCE IS LESS THAN 4" TO 12".

1

3 TYP PAVED TRENCH DETAIL: STA 150+50 TO STA 153+45

05-PP-36, 05-PP-37 NTS

DESIGN T LEWIS
DRAWN M KARBAKHSH
CHECKED T LEWIS
APPROVED M FISHER

WATERWORKS ENGINEERS
2260 Douglas Blvd, Suite 105 • Roseville, CA 95661 • 916-780-2888

CITY OF MORRO BAY

WATER RECLAMATION FACILITY
LIFT STATION AND OFFSITE PIPELINES

CIVIL DETAILS

TRENCH SECTIONS AND SURFACE RESTORATION
STA 120+50 TO STA 155+80

REGISTERED PROFESSIONAL ENGINEER
MICHAEL FISHER
No. C67194
CIVIL
STATE OF CALIFORNIA
05/29/2020

DATE
MAY 2020

PROJECT NUMBER
17-082

DRAWING NUMBER
05-CD-07

SHEET NUMBER 99

JOB NUMBER: 17-082 FILENAME: 1782-05CD07.DWG PLOT DATE: 05/29/20 PLOT TIME: 09:11:06

L:\CAD\PROJECTS\17-082 MORRO BAY PS AND PIPELINE_(S)\PROJECT FILES\DELIVERABLES\1782-05CD07.DWG

CONFORMED SET - DEC 2020

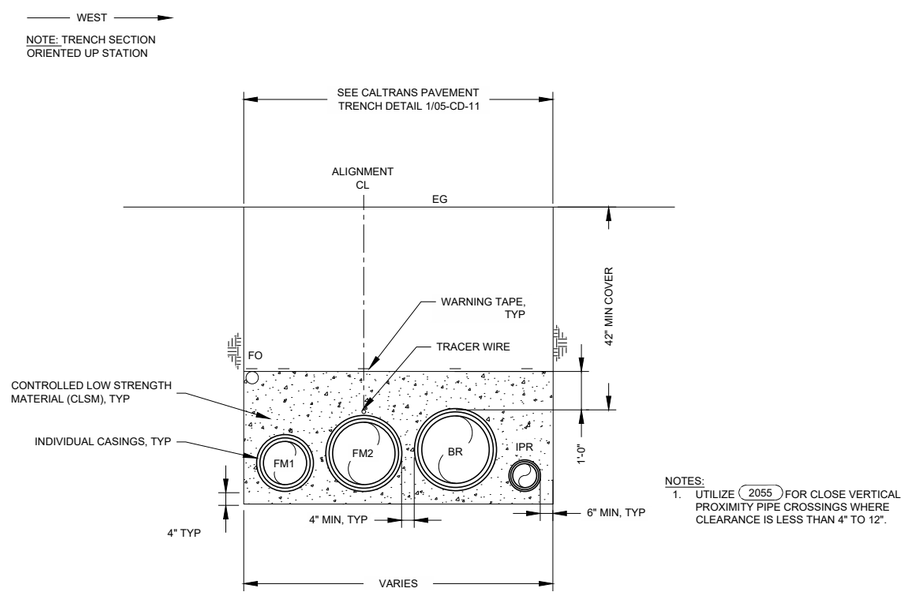

NOTES:
1. UTILIZE (2055) FOR CLOSE VERTICAL PROXIMITY PIPE CROSSINGS WHERE CLEARANCE IS LESS THAN 4" TO 12".

1 TYP PAVED TRENCH DETAIL W/ CASINGS STA: 153+45 TO STA 160+50

05-PP-38 NTS
05-PP-39

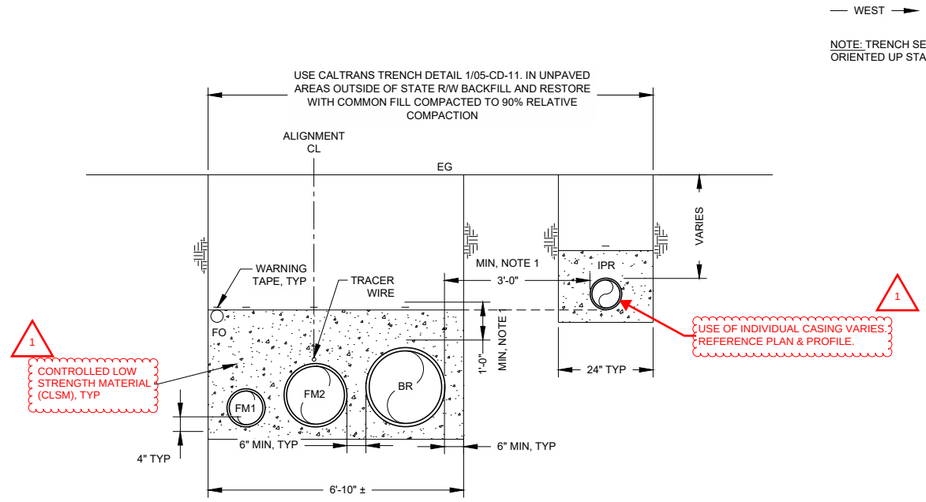

NOTES:
1. NON-ENCASED IPR MAY NOT BE INSTALLED IN SAME TRENCH AS NON-ENCASED SANITARY UTILITIES OR NON-ENCASED POTABLE WATER UTILITIES. PER PROJECT-SPECIFIC DDW PERMIT REQUIREMENTS, IPR MAY BE LOCATED A MIN 3'-0" FROM SANITARY UTILITIES IF 1'-0" VERTICAL SEPARATION IS PROVIDED. IN ADDITION, IPR MAY BE LOCATED A MIN 3'-0" AWAY FROM PARALLEL POTABLE WATER UTILITIES.
2. UTILIZE (2055) FOR CLOSE VERTICAL PROXIMITY PIPE CROSSING WHERE CLEARANCE IS LESS THAN 4" TO 12".

2 TYP PAVED TRENCH DETAIL: STA 160+50 TO END

05-PP-38 NTS
05-PP-39

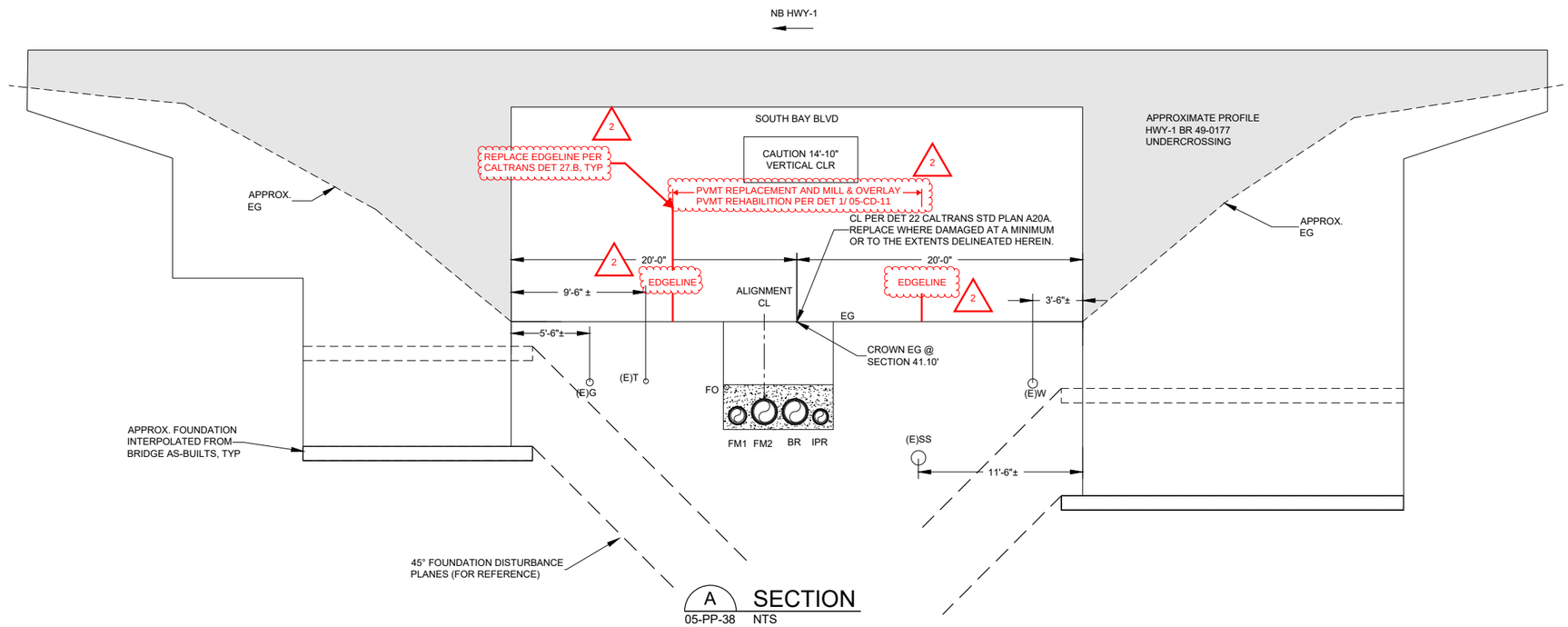

A SECTION

05-PP-38 NTS
STA 157+66

DESIGN	T LEWIS
DRAWN	M KARBAKHSH
CHECKED	T LEWIS
APPROVED	M FISHER

WATERWORKS ENGINEERS
2260 Douglas Blvd, Suite 105 • Roseville, CA 95661 • 916-780-2888

CITY OF MORRO BAY
WATER RECLAMATION FACILITY
LIFT STATION AND OFFSITE PIPELINES

CIVIL DETAILS
TRENCH SECTIONS AND SURFACE RESTORATION
STA 153+45 TO END



05/29/2020

DATE	MAY 2020
PROJECT NUMBER	17-082
DRAWING NUMBER	05-CD-08
SHEET NUMBER	100

JOB NUMBER: 17-082 FILENAME: 1782-05CD08.DWG PLOT DATE: 05/28/20 PLOT TIME: 14:41:17

L:\CAD\PROJECTS\17-082 MORRO BAY PS AND PIPELINE_(S)\PROJECT FILES\DELIVERABLES\1782-05CD08.DWG

CONFORMED SET - DEC 2020

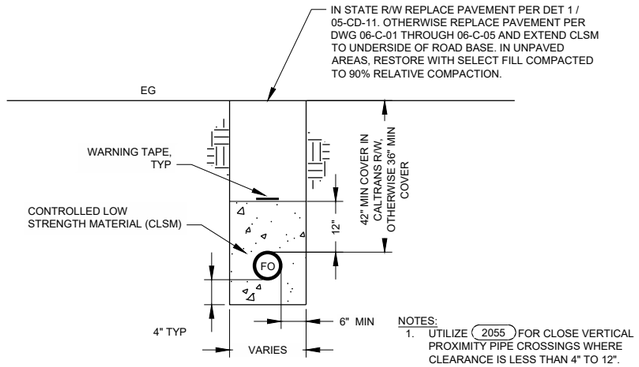

NOTES:
1. UTILIZE 2055 FOR CLOSE VERTICAL PROXIMITY PIPE CROSSINGS WHERE CLEARANCE IS LESS THAN 4" TO 12".

1 FO CONDUIT SINGLE TRENCH DETAIL
-- NTS

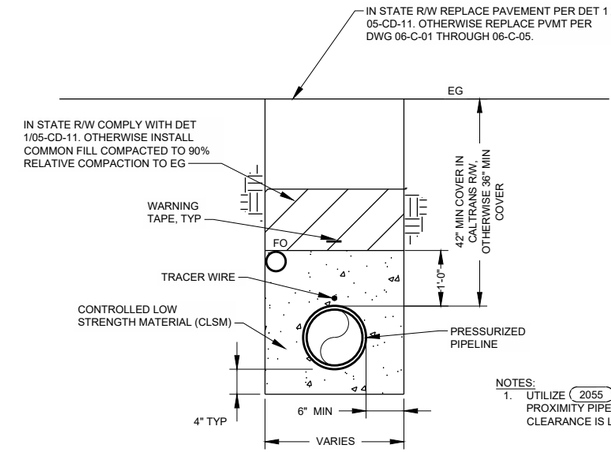

NOTES:
1. UTILIZE 2055 FOR CLOSE VERTICAL PROXIMITY PIPE CROSSINGS WHERE CLEARANCE IS LESS THAN 4" TO 12".

2 SINGLE PRESSURE PIPE TYP TRENCH DETAIL
-- NTS

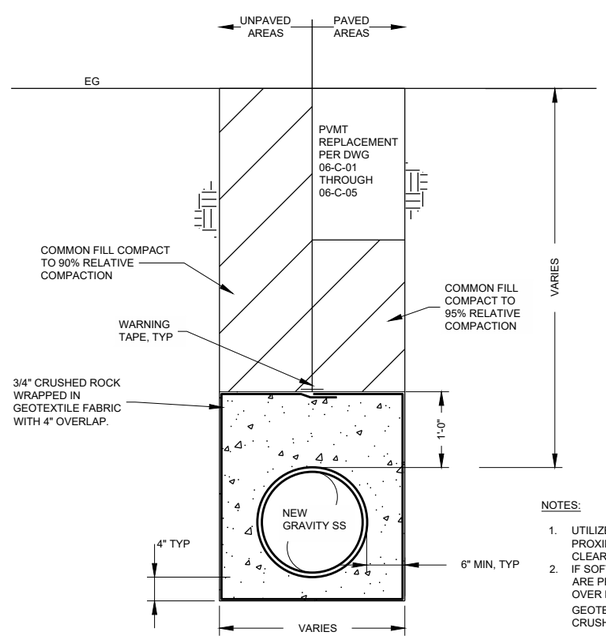

NOTES:
1. UTILIZE 2055 FOR CLOSE VERTICAL PROXIMITY PIPE CROSSINGS WHERE CLEARANCE IS LESS THAN 4" TO 12".
2. IF SOFT AND UNSUITABLE MATERIALS ARE PRESENT IN TRENCH BOTTOM, OVER EXCAVATE 18" AND FILL WITH GEOTEXTILE FABRIC WRAPPED ¾" CRUSHED ROCK.

3 TYP GRAVITY SS TRENCH DETAIL
-- NTS

W:\CAD\PROJECTS\17-082 MORRO BAY PS AND PIPELINE_{S}\PROJECT FILES\DELIVERABLES\1782-05CD09.DWG

DESIGN T LEWIS
DRAWN M KARBAKHSH
CHECKED T LEWIS
APPROVED M FISHER

WATERWORKS ENGINEERS
2260 Douglas Blvd, Suite 105 • Roseville, CA 95661 • 916-780-2888

CITY OF MORRO BAY
WATER RECLAMATION FACILITY
LIFT STATION AND OFFSITE PIPELINES

CIVIL DETAILS
MISC TRENCH SECTIONS AND SURFACE RESTORATION

REGISTERED PROFESSIONAL ENGINEER
No. C-67194
CIVIL
STATE OF CALIFORNIA
05/29/2020

DATE MAY 2020
PROJECT NUMBER 17-082
DRAWING NUMBER 05-CD-09
SHEET NUMBER 101

JOB NUMBER: 17-082 FILENAME: 1782-05CD09.DWG PLOT DATE: 06/2/20 PLOT TIME: 00:16:49

CONFORMED SET - DEC 2020

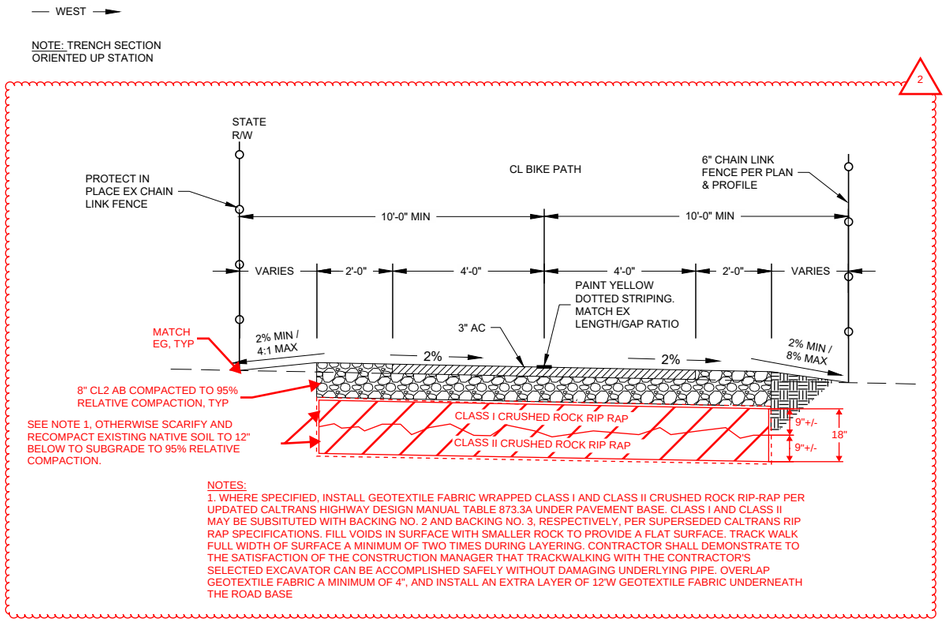

NOTES:
1. WHERE SPECIFIED, INSTALL GEOTEXTILE FABRIC WRAPPED CLASS I AND CLASS II CRUSHED ROCK RIP-RAP PER UPDATED CALTRANS HIGHWAY DESIGN MANUAL TABLE 873.3A UNDER PAVEMENT BASE. CLASS I AND CLASS II MAY BE SUBSITUTED WITH BACKING NO. 2 AND BACKING NO. 3, RESPECTIVELY, PER SUPERSEDED CALTRANS RIP RAP SPECIFICATIONS. FILL VOIDS IN SURFACE WITH SMALLER ROCK TO PROVIDE A FLAT SURFACE. TRACK WALK FULL WIDTH OF SURFACE A MINIMUM OF TWO TIMES DURING LAYERING. CONTRACTOR SHALL DEMONSTRATE TO THE SATISFACTION OF THE CONSTRUCTION MANAGER THAT TRACKWALKING WITH THE CONTRACTOR'S SELECTED EXCAVATOR CAN BE ACCOMPLISHED SAFELY WITHOUT DAMAGING UNDERLYING PIPE. OVERLAP GEOTEXTILE FABRIC A MINIMUM OF 4", AND INSTALL AN EXTRA LAYER OF 12'W GEOTEXTILE FABRIC UNDERNEATH THE ROAD BASE

1 BIKE PATH PAVEMENT (A.C.) REPLACEMENT

05-PP-07, 05-PP-08 NTS
05-PP-09, 05-PP-10
05-PP-11

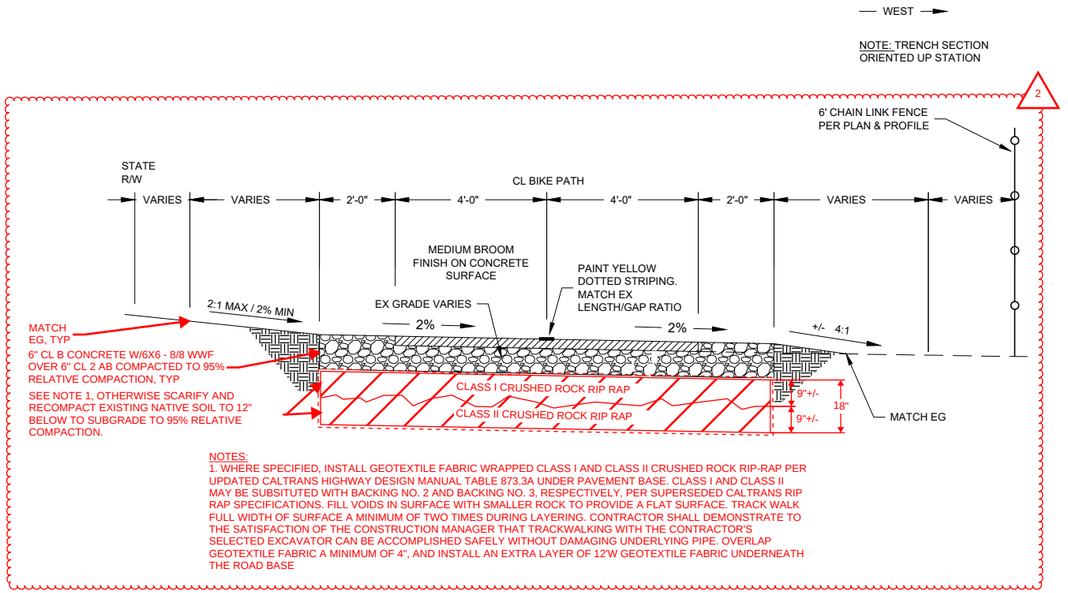

NOTES:
1. WHERE SPECIFIED, INSTALL GEOTEXTILE FABRIC WRAPPED CLASS I AND CLASS II CRUSHED ROCK RIP-RAP PER UPDATED CALTRANS HIGHWAY DESIGN MANUAL TABLE 873.3A UNDER PAVEMENT BASE. CLASS I AND CLASS II MAY BE SUBSITUTED WITH BACKING NO. 2 AND BACKING NO. 3, RESPECTIVELY, PER SUPERSEDED CALTRANS RIP RAP SPECIFICATIONS. FILL VOIDS IN SURFACE WITH SMALLER ROCK TO PROVIDE A FLAT SURFACE. TRACK WALK FULL WIDTH OF SURFACE A MINIMUM OF TWO TIMES DURING LAYERING. CONTRACTOR SHALL DEMONSTRATE TO THE SATISFACTION OF THE CONSTRUCTION MANAGER THAT TRACKWALKING WITH THE CONTRACTOR'S SELECTED EXCAVATOR CAN BE ACCOMPLISHED SAFELY WITHOUT DAMAGING UNDERLYING PIPE. OVERLAP GEOTEXTILE FABRIC A MINIMUM OF 4", AND INSTALL AN EXTRA LAYER OF 12'W GEOTEXTILE FABRIC UNDERNEATH THE ROAD BASE

1 → 2 BIKE PATH PAVEMENT (CONCRETE) REPLACEMENT

05-PP-11 NTS
05-PP-12

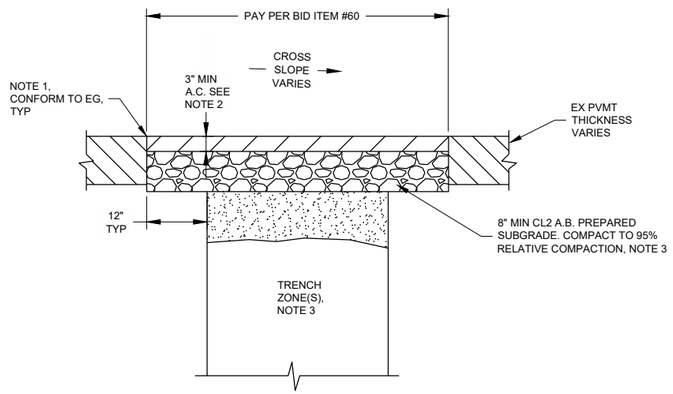

NOTES

1. CUT EX ROADWAY TO PROVIDE VERTICAL SURFACES. CUT EDGES TO BE STRAIGHT AND NEAT IN APPEARANCE. APPLY TACK COAT TO CUT EDGES. APPLY SEAL COAT TO FINISHED SURFACE ALONG LONGITUDINAL JOINT PER SPEC 02770.
2. HOT MIX A.C. PER SPEC 02770. PAVEMENT DEPTH AND CL2 A.B. ROAD BASE SPECIFIC TO PAVEMENT ZONE AND MAY EXTEND OVER MULTIPLE TRENCHES AS LISTED ON DWGS 06-C-01, 06-C-02, 06-C-03, 06-C-04, AND 06-C-05
3. SEE DWG 05-CD-01 THROUGH 09 FOR TRENCH SIZES, CLEARANCES, AND BACKFILL REQUIREMENTS.
4. CONTRACTOR SHALL INSTALL AND MAINTAIN TEMPORARY PAVEMENT FOR 2 WEEKS PRIOR TO INSTALLATION OF PERMANENT HOT-MIX PAVEMENT.

3 PVMT REPLACEMENT WITH NO PVMT REHABILITATION

- NTS

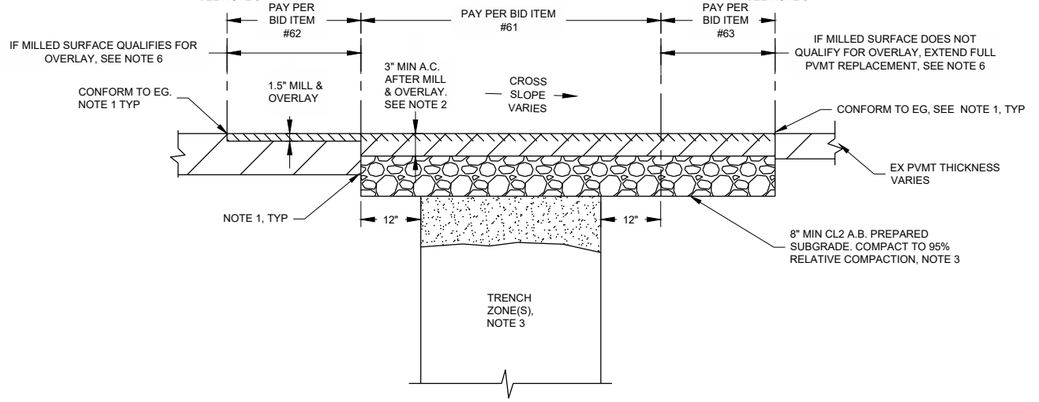

NOTES
1. CUT EX ROADWAY TO PROVIDE VERTICAL SURFACES. CUT EDGES TO BE STRAIGHT AND NEAT IN APPEARANCE. APPLY TACK COAT TO CUT EDGES. APPLY SEAL COAT TO FINISHED SURFACE ALONG LONGITUDINAL JOINT PER SPEC 02770.
2. HOT MIX A.C. PER SPEC 02770. PAVEMENT DEPTH AND CL2 A.B. ROAD BASE SPECIFIC TO PAVEMENT ZONE AND MAY EXTEND OVER MULTIPLE TRENCHES AS LISTED ON DWGS 06-C-01, 06-C-02, 06-C-03, 06-C-04, AND 06-C-05
3. SEE DWG 05-CD-01 THROUGH 09 FOR TRENCH SIZES, CLEARANCES, AND BACKFILL REQUIREMENTS.
4. CONTRACTOR SHALL INSTALL AND MAINTAIN TEMPORARY PAVEMENT FOR 2 WEEKS PRIOR TO INSTALLATION OF PERMANENT HOT-MIX PAVEMENT.
5. EXTEND OVER TRENCH ZONES TO CLOSEST CONCRETE C&G EDGE, PAVEMENT EDGE TERMINATION, LANE LINE, OR CENTER OF VEHICULAR TRAVEL LANE WHEN BOUNDED BY LANE LINES. IF VEHICULAR TRAVEL LANE IS NOT DEFINED BY LANE LINES, THE CENTER OF VEHICULAR TRAVEL LANE IS ASSUMED TO EXTEND 6'-0" BEYOND THE ROADWAY CL OR EDGE OF MEDIAN STRIPING. IF VEHICULAR TRAVEL LANE IS NOT DEFINED BY LANE LINES, THE VEHICULAR TRAVEL LANE LIMIT IS ASSUMED TO EXTEND 12'-0" BEYOND THE ROADWAY CL OR EDGE OF MEDIAN STRIPING. IF TRENCH LIMITS EXTEND PAST INNER BIKE LANE LINE, THEN EXTEND TO CLOSEST CONCRETE C&G EDGE LINE OR PAVEMENT EDGE TERMINATION.
6. MILL & OVERLAY PER SPEC 02775 WHEN EXISTING PAVEMENT QUALIFIES, WHICH IS DEFINED AS EXISTING PAVEMENT THAT IS 2" THICKER THAN PROPOSED MILL DEPTH AND IF MILLED SURFACE CAN BE PROPERLY PREPARED PER SPEC 02770.

4 PVMT REPLACEMENT WITH MILL & & OVERLAY PVMT REHABILITATION

- NTS

REGISTERED PROFESSIONAL ENGINEER — MICHAEL MORRIS — No. C67194 — CIVIL — STATE OF CALIFORNIA
05/29/2020

DESIGN T LEWIS
DRAWN M KARBAKHSH
CHECKED T LEWIS
APPROVED M FISHER

WATERWORKS ENGINEERS
2260 Douglas Blvd, Suite 105 • Roseville, CA 95661 • 916-780-2888

CITY OF MORRO BAY
WATER RECLAMATION FACILITY
LIFT STATION AND OFFSITE PIPELINES

CIVIL DETAILS
PAVEMENT REPLACEMENT AND REHABILITATION DETAILS IN CITY R/W

DATE MAY 2020
PROJECT NUMBER 17-082
DRAWING NUMBER 05-CD-10
SHEET NUMBER 102

W:\CAD\PROJECTS\17-082 MORRO BAY PS AND PIPELINE_(S)\PROJECT FILES\DELIVERABLES\1782-05CD10.DWG

JOB NUMBER: 17-082 FILENAME: 1782-05CD10.DWG PLOT DATE: 06/2/20 PLOT TIME: 00:23:35

CONFORMED SET - DEC 2020

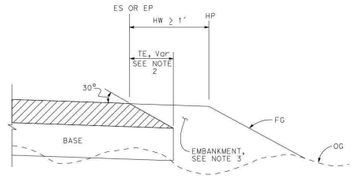

CASE K
Tapered Edge - Fill Section, HW ≥ 1'

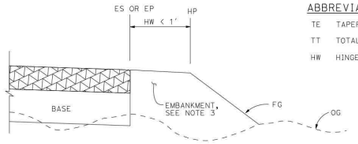

CASE L
Vertical Edge - Fill Section, HW < 1'

FILL SECTION

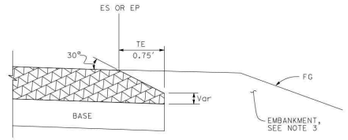

DETAIL "B"
For HMA pavement thickness more than 0.43' or concrete pavement

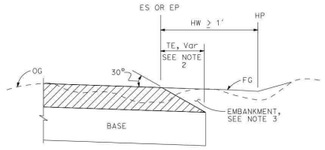

CASE M
Tapered Edge - Cut Section, HW ≥ 1'

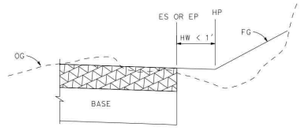

CASE N
Vertical Edge - Cut Section, HW < 1'

CUT SECTION

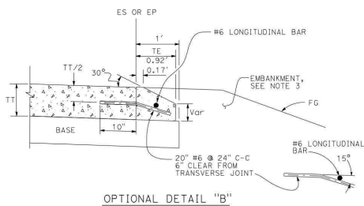

OPTIONAL DETAIL "B"
For concrete pavement
See Note 4

LEGEND:

- HMA PAVEMENT
- HMA OR CONCRETE PAVEMENT
- CONCRETE PAVEMENT

ABBREVIATIONS:

TE TAPERED EDGE
TT TOTAL THICKNESS OF TE
HW HINGE WIDTH, DISTANCE FROM ES OR EP TO HP

NOTES:

1. For limits of tapered edge and vertical edge treatments, see Standard Plan P74
2. Details shown for HMA pavement thickness less than 0.43'. See Detail "B" for HMA pavement thickness more than 0.43' or concrete pavement.
3. For locations and limits of embankment see project plans.
4. Tapered edge transverse joint must match pavement transverse joint. End of #6 longitudinal bar must be 2" ±½" clear from transverse joint.
5. Tapered edge is not needed in the area of MGS, barrier, right turn lane and acceleration lane. See Standard Plan P74.

DIST	COUNTY	ROUTE	POST MILES TOTAL PROJECT	SHEET NO.	TOTAL SHEETS

REGISTERED CIVIL ENGINEER
May 31, 2018
PLANS APPROVAL DATE
REGISTERED PROFESSIONAL ENGINEER Srikanth S. Raviprakash No. C56426 6-30-19 CIVIL STATE OF CALIFORNIA
THE STATE OF CALIFORNIA OR ITS OFFICERS OR AGENTS SHALL NOT BE RESPONSIBLE FOR THE ACCURACY OR COMPLETENESS OF SCANNED COPIES OF THIS PLAN SHEET.

STATE OF CALIFORNIA
DEPARTMENT OF TRANSPORTATION

PAVEMENT EDGE TREATMENTS-NEW CONSTRUCTION

NO SCALE

P76

2018 STANDARD PLAN P76

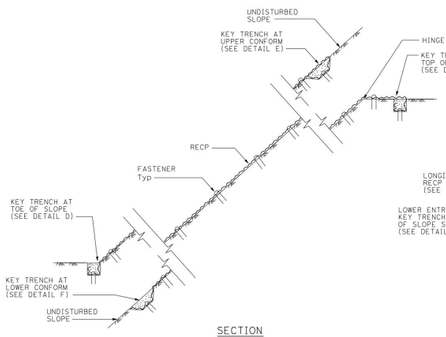

SECTION
ROLLED EROSION CONTROL PRODUCT ON SLOPE WITH VARIOUS KEY ENTRENCHMENTS

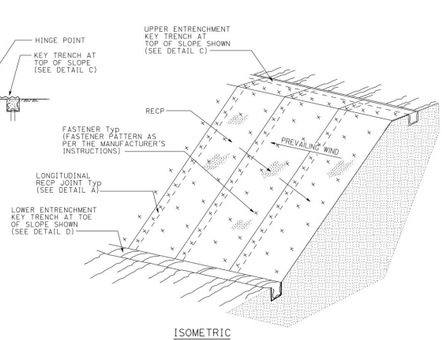

ISOMETRIC
ROLLED EROSION CONTROL PRODUCT ON SLOPE

DIST	COUNTY	ROUTE	POST MILES TOTAL PROJECT	SHEET NO.	TOTAL SHEETS

LICENSED LANDSCAPE ARCHITECT
May 31, 2018
PLANS APPROVAL DATE
REGISTERED LANDSCAPE ARCHITECT Richard Bowen No. 3893 RENEWAL 08/31/2019 STATE OF CALIFORNIA
THE STATE OF CALIFORNIA OR ITS OFFICERS OR AGENTS SHALL NOT BE RESPONSIBLE FOR THE ACCURACY OR COMPLETENESS OF SCANNED COPIES OF THIS PLAN SHEET.

NOTES:

1. Fiber Roll/Compost Sock shown for reference purposes only.
2. If transverse rolled erosion control product joints are required on slopes, see Detail B.

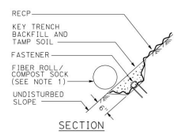

SECTION
DETAIL F
KEY TRENCH AT LOWER CONFORM

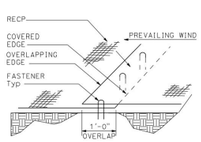

PERSPECTIVE
DETAIL A
LONGITUDINAL ROLLED EROSION CONTROL PRODUCT JOINT

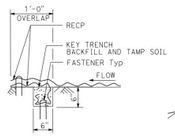

SECTION
DETAIL B
TRANSVERSE ROLLED EROSION CONTROL PRODUCT JOINT

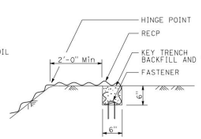

SECTION
DETAIL C
KEY TRENCH AT TOP OF SLOPE

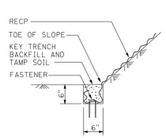

SECTION
DETAIL D
KEY TRENCH AT TOE OF SLOPE

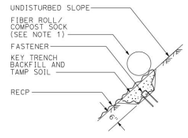

SECTION
DETAIL E
KEY TRENCH AT UPPER CONFORM

STATE OF CALIFORNIA
DEPARTMENT OF TRANSPORTATION

ROLLED EROSION CONTROL PRODUCT

NO SCALE

H52

2018 STANDARD PLAN H52

STATE OF CALIFORNIA - DEPARTMENT OF TRANSPORTATION
ENCROACHMENT PERMIT TRENCH DETAIL
TR – 0153 (Rev. 11/2019) Page 1 of 2

TYPICAL TRENCH DETAIL (NOT TO SCALE)

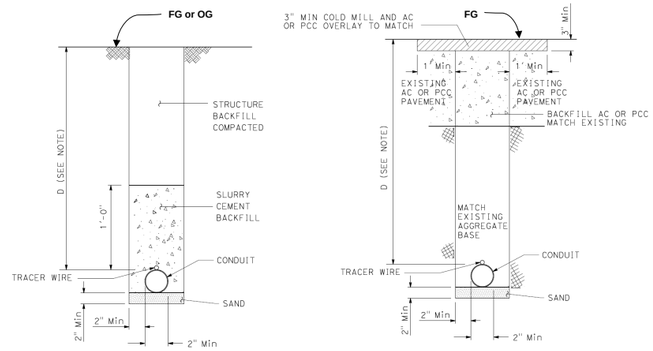

TRENCH IN SOIL

TRENCH IN PAVEMENT (PCC OR ASPHALT)

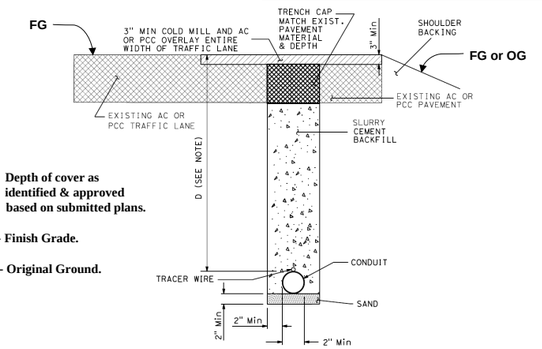

LONGITUDINAL TRENCH IN PAVEMENT (PCC OR ASPHALT)

Notes: D - Depth of cover as identified & approved based on submitted plans.

FG - Finish Grade.

OG - Original Ground.

- **All work must be authorized by the encroachment permit, and/or as directed by the State's representative.**
- **A tracer wire must be placed on top of the conduit unless specified not to.**
- **Clearance between the trench wall and encroachment work less than 6 inches in width shall be a minimum of 2 inches. Clearance between the trench wall and encroachment work greater than 6 inches width shall be a minimum of 6 inches.**
- **When the trench width is less than 2' the backfill for subgrade must consist of either slurry cement or Controlled Low-Strength Material (CLSM).**
- **When trench width is greater than 2' compacted aggregate base may be used for backfill.**
- **Structure backfill must conform to Section 19-3.02C of the Standard Specifications.**
- **For trench located under unimproved surface, structure backfill can use the original soil. Soil must be compacted by mechanical means. Ponding, jetting or flooding are not allowed. Slurry cement backfill is optional at the discretion of the Caltrans District.**
- **Slurry cement backfill must conform to Section 19-3.02E of the Standard Specifications.**
- **Aggregate base shall conform to Section 26 of the Standard Specifications.**
- **CLSM must conform to Section 19-3.02G of the Standard Specifications. When CLSM is utilized the mix design and test results must be submitted to the State's representative. See Appendix H of the Encroachment Permits Manual for additional information.**
- **Cold planed surface and overlay shall be to the nearest lane line for the entire length of the trench/disturbed areas, and/or as directed by the State's representative.**
- **A paving notch ("T" Cut) shall be cold planed in exist asphalt concrete to a minimum width of 1.0' beyond each side of the trench and to a depth of 3" for the final layer of HMA.**
- **HMA or PCC to replace pavement section shall match existing pavement depth, unless directed otherwise by the State's representative.**
- **Hot mix asphalt must conform to Section 39 of the Standard Specifications.**
- **A tack coat of asphaltic emulsion conforming to Section 39-2.01C (3) (f) shall be applied.**
- **When the trench is within 4' of curb and gutter, additional cold planing may be required at the discretion of the State's representative.**
- **Pavement markings and/or striping removed or damaged during construction must be replaced as directed by the State's representative.**
- **Other trench related details are shown in Chapter 6 of the Encroachment Permits Manual as well as the Trenching and Shoring Manual. Both publications can be found on the State of California, Department of Transportation's website.**

1 CALTRANS TRENCH & PVMT REPLACEMENT DETAIL
- NTS

REGISTERED PROFESSIONAL ENGINEER MICHAEL P. FISHER No. C67194 CIVIL STATE OF CALIFORNIA
05/29/2020

DESIGN T LEWIS
DRAWN M KARBAKHSH
CHECKED T LEWIS
APPROVED M FISHER

WATERWORKS ENGINEERS
2260 Douglas Blvd, Suite 105 • Roseville, CA 95661 • 916-780-2888

CITY OF MORRO BAY
WATER RECLAMATION FACILITY
LIFT STATION AND OFFSITE PIPELINES

CIVIL DETAILS
CALTRANS STANDARD PLANS

DATE MAY 2020
PROJECT NUMBER 17-082
DRAWING NUMBER 05-CD-11
SHEET NUMBER 103

JOB NUMBER: 17-082 FILENAME: 1782-05CD11.DWG PLOT DATE: 05/28/20 PLOT TIME: 14:45:12

L:\CAD\PROJECTS\17-082 MORRO BAY PS AND PIPELINE_(S)\PROJECT FILES\DELIVERABLES\1782-05CD11.DWG

CONFORMED SET - DEC 2020

© 2018 California Department of Transportation
All Rights Reserved

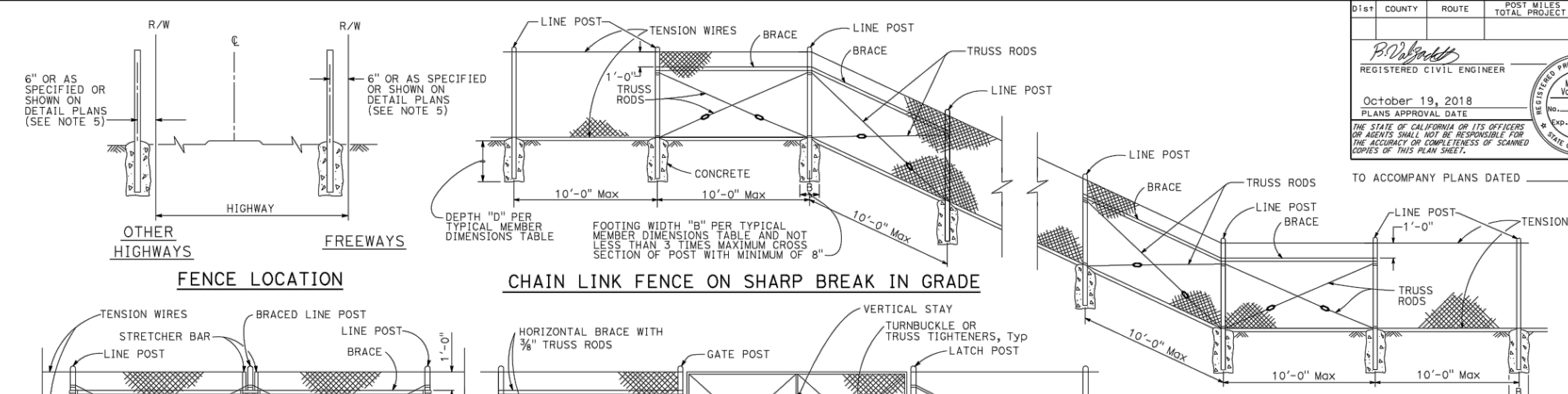

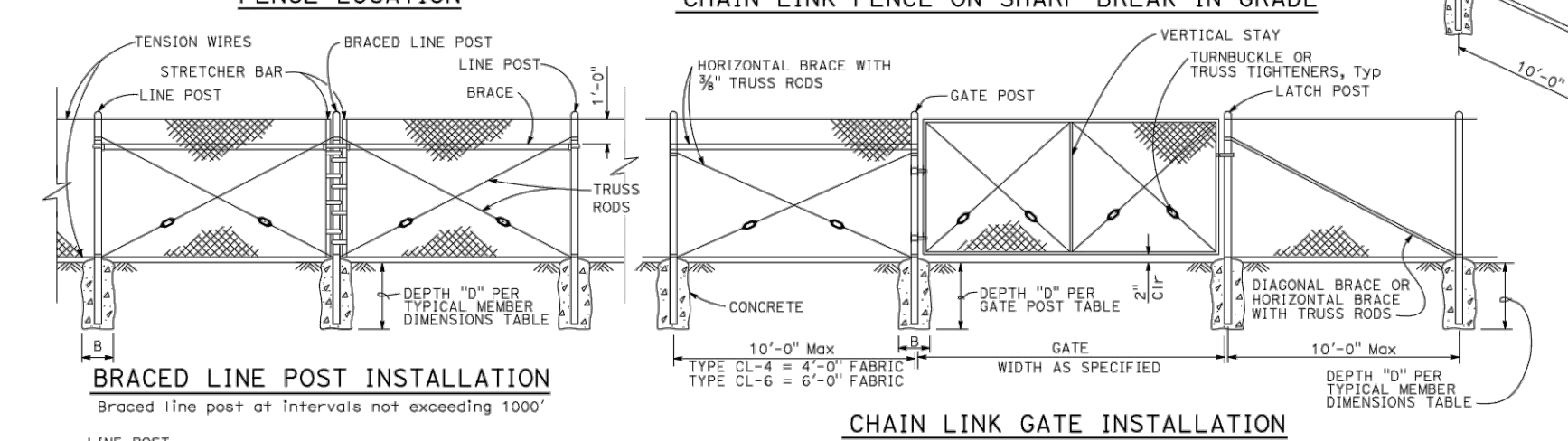

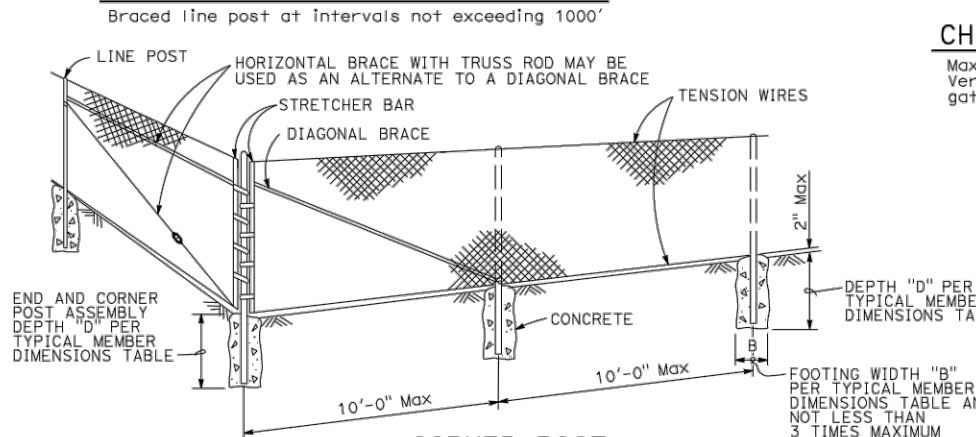

GATE POST

FENCE HEIGHT (Max)	SLATTED	B (in)	D (ft)	ROUND PIPE: ROUND OD PIPE	GROUP 1A WEIGHT (lb/ft)	GROUP 1C WEIGHT (lb/ft)
5'-0"	NO	12"	2'-6"	3.50"	7.58	5.71
6'-0"	NO	12"	2'-6"	3.50"	7.58	5.71
8'-0"	NO	12"	3'-0"	3.50"	7.58	5.71
10'-0"	NO	14"	3'-6"	3.50"	7.58	5.71
5'-0"	YES	12"	3'-0"	4.00"	9.12	6.56
6'-0"	YES	14"	3'-6"	4.50"	10.80	-
8'-0"	YES	18"	3'-6"	5.56"	14.60	-
10'-0"	YES	20"	4'-0"	6.63"	19.00	-

Above post dimensions and weights are minimums.
Larger sizes may be used upon approval.

TYPICAL MEMBER DIMENSIONS (See Notes)

FENCE HEIGHT (Max)	SLATTED	B (in)	D (ft)	LINE POSTS: ROUND OD PIPE	LINE POSTS: GROUP 1A WEIGHT (lb/ft)	LINE POSTS: GROUP 1C WEIGHT (lb/ft)	LINE POSTS: ROLL FORMED SECTION	LINE POSTS: ROLL FORMED WEIGHT (lb/ft)	BRACES: ROUND OD PIPE	BRACES: GROUP 1A WEIGHT (lb/ft)	BRACES: GROUP 1C WEIGHT (lb/ft)	BRACES: ROLL FORMED SECTION	BRACES: ROLL FORMED WEIGHT (lb/ft)
5'-0"	NO	8"	2'-6"	1.90"	2.72	2.28	1.875" x 1.625"	1.85	1.90"	2.72	2.28	1.625" x 1.250"	1.35
6'-0"	NO	10"	2'-6"	2.38"	3.66	3.12	1.875" x 1.625"	2.40	2.38"	3.66	3.12	1.625" x 1.250"	1.35
8'-0"	NO	12"	3'-0"	2.88"	5.80	4.64	3.250" x 2.500"	4.50	2.38"	3.66	3.12	1.625" x 1.250"	1.35
10'-0"	NO	14"	3'-6"	3.50"	7.58	5.71	3.250" x 2.500"	4.50	2.88"	5.80	4.64	1.625" x 1.250"	1.35
5'-0"	YES	12"	3'-0"	4.00"	9.12	6.56	N/A	-	2.38"	3.66	3.12	N/A	-
6'-0"	YES	14"	3'-0"	4.50"	10.80	-	N/A	-	2.38"	3.66	3.12	N/A	-
8'-0"	YES	18"	3'-6"	5.56"	14.60	-	N/A	-	2.38"	3.66	3.12	N/A	-
10'-0"	YES	20"	4'-0"	6.63"	19.00	-	N/A	-	2.88"	5.80	4.64	N/A	-

NOTES:

1. The table to the right shows minimum sized posts and braces complying with the specifications. Larger or heavier post and brace sizes may be used upon approval.
2. Sections shown in the tables must also comply with the strength requirements and other provisions of the Specifications.
3. Other sections which comply with the strength requirements and other provisions of the Specifications may be used upon approval.
4. Options exercised shall be uniform on any one project.
5. Offset to be 2'-0" at monument locations, measured at right angles to R/W lines. Taper to achieve offset to be at least 20'-0" long.
6. See Standard Plan A85B for Brace, Stretcher Bar, and Truss Tightener Details.

Dist	COUNTY	ROUTE	POST MILES TOTAL PROJECT	SHEET No.	TOTAL SHEETS

REGISTERED CIVIL ENGINEER
October 19, 2018
PLANS APPROVAL DATE
M. Reza Valizadeh No. C51902 Exp. 6-30-20 CIVIL
THE STATE OF CALIFORNIA OR ITS OFFICERS OR AGENTS SHALL NOT BE RESPONSIBLE FOR THE ACCURACY OR COMPLETENESS OF SCANNED COPIES OF THIS PLAN SHEET.

TO ACCOMPANY PLANS DATED ______

STATE OF CALIFORNIA
DEPARTMENT OF TRANSPORTATION

CHAIN LINK FENCE

NO SCALE

RSP A85 DATED OCTOBER 19, 2018 SUPERSEDES STANDARD PLAN A85 DATED MAY 31, 2018 - PAGE 140 OF THE STANDARD PLANS BOOK DATED 2018.

REVISED STANDARD PLAN RSP A85

2018 REVISED STANDARD PLAN RSP A85

2-1-18

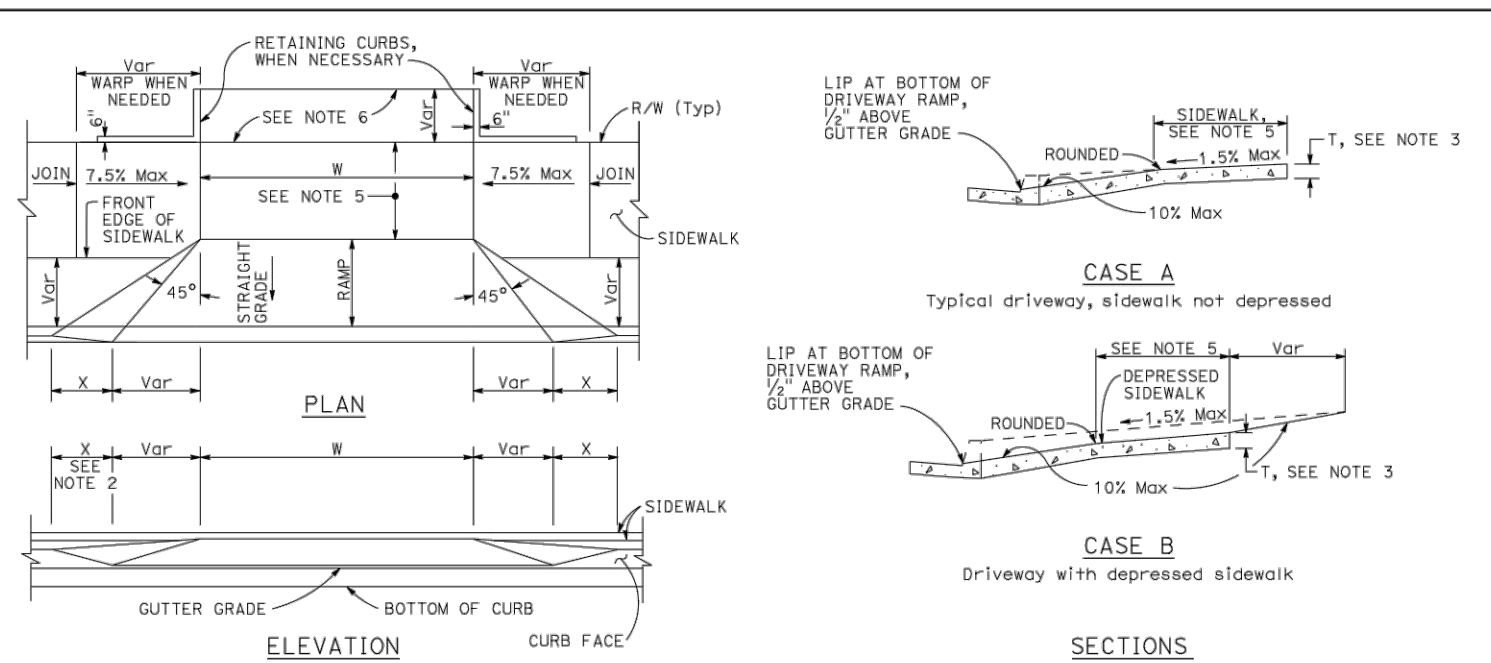

TABLE A

CURB TYPE	DIMENSIONS "H1"	"H2"	"W1"	"W2"
A1-6	1'-2"	6"	7½"	1½"
A1-8	1'-4"	8"	8"	2"
A2-6	1'-0"	6"	2'-7½"	1½"
A2-8	1'-2"	8"	2'-8"	2"
A3-6	6"	5"	7¼"	1¼"
A3-8	8"	7"	7¾"	1¾"
B1-4	1'-0"	4"	7½"	2½"
B1-6	1'-2"	6"	9"	4"
B2-4	10"	4"	2'-7½"	2½"
B2-6	1'-0"	6"	2'-9"	4"
B3-4	4"	3"	7"	2"
B3-6	6"	5"	8½"	3½"
D-4	10"	4"	1'-6"	1'-1"
D-6	1'-0"	6"	2'-2"	1'-9"

CURB QUANTITIES

TYPE	CUBIC YARDS PER LINEAR FOOT
A1-6	0.02585
A1-8	0.03084
A2-6	0.05903
A2-8	0.06379
A3-6	0.01036
A3-8	0.01435
B1-4	0.02185
B1-6	0.02930
B2-4	0.05515
B2-6	0.06171
B3-4	0.00641
B3-6	0.01074
B4	0.05709
D-4	0.04083
D-6	0.06804
E	0.06661

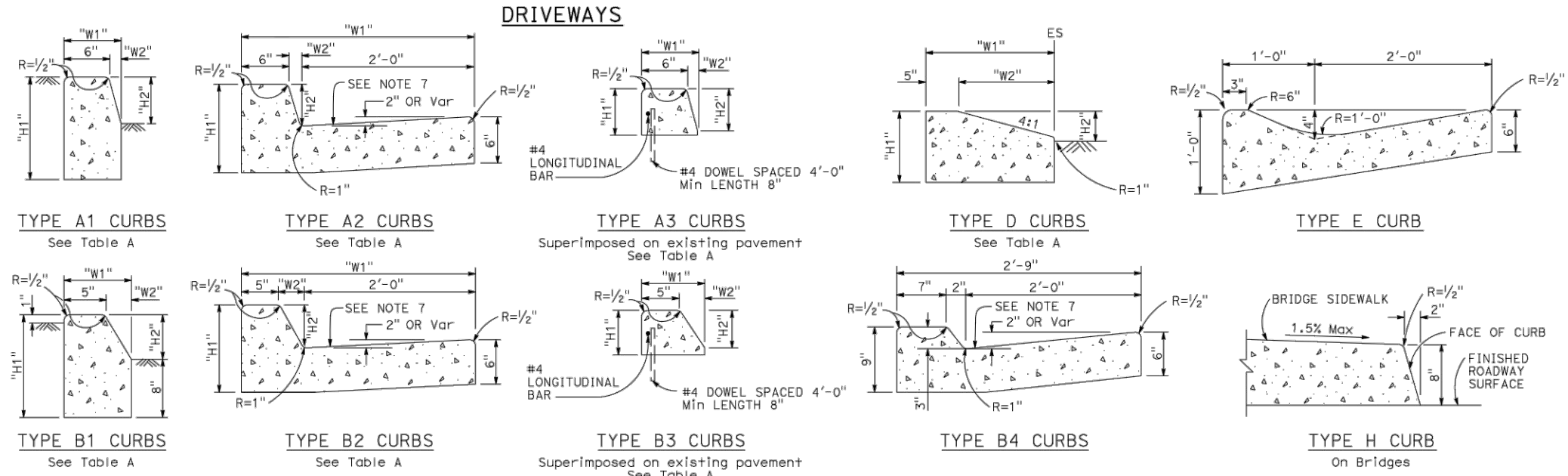

NOTES:

1. Case A driveway section typically applies.
2. X=3'-0" except for curb heights over 10" where 4:1 slopes shall be used on curb slope.
3. Sidewalk and ramp thickness "T" at driveway shall be 4" for residental and 6" for commercial.
4. Difference in slope of the driveway ramp and the slope of a line between the gutter and a point on the roadway 5'-0" from gutter line shall not exceed 15%. Reduce driveway ramp slope, not gutter slope, where required.
5. Minimum width of clear passageway for sidewalk shall be 4'-2".
6. Retaining curbs and acquisition of construction easement may be necessary for narrow sidewalks or curb heights in excess of 6".
7. Across the pedestrian route at curb ramp locations, the gutter pan slope shall not exceed 1" of depth for each 2'-0" of width.

Dist	COUNTY	ROUTE	POST MILES TOTAL PROJECT	SHEET No.	TOTAL SHEETS

REGISTERED CIVIL ENGINEER
May 31, 2018
PLANS APPROVAL DATE
Hector David Cordova No. C41957 Exp. 3-31-20 CIVIL
THE STATE OF CALIFORNIA OR ITS OFFICERS OR AGENTS SHALL NOT BE RESPONSIBLE FOR THE ACCURACY OR COMPLETENESS OF SCANNED COPIES OF THIS PLAN SHEET.

STATE OF CALIFORNIA
DEPARTMENT OF TRANSPORTATION

CURBS AND DRIVEWAYS

NO SCALE

A87A

2018 STANDARD PLAN A87A

1-29-18

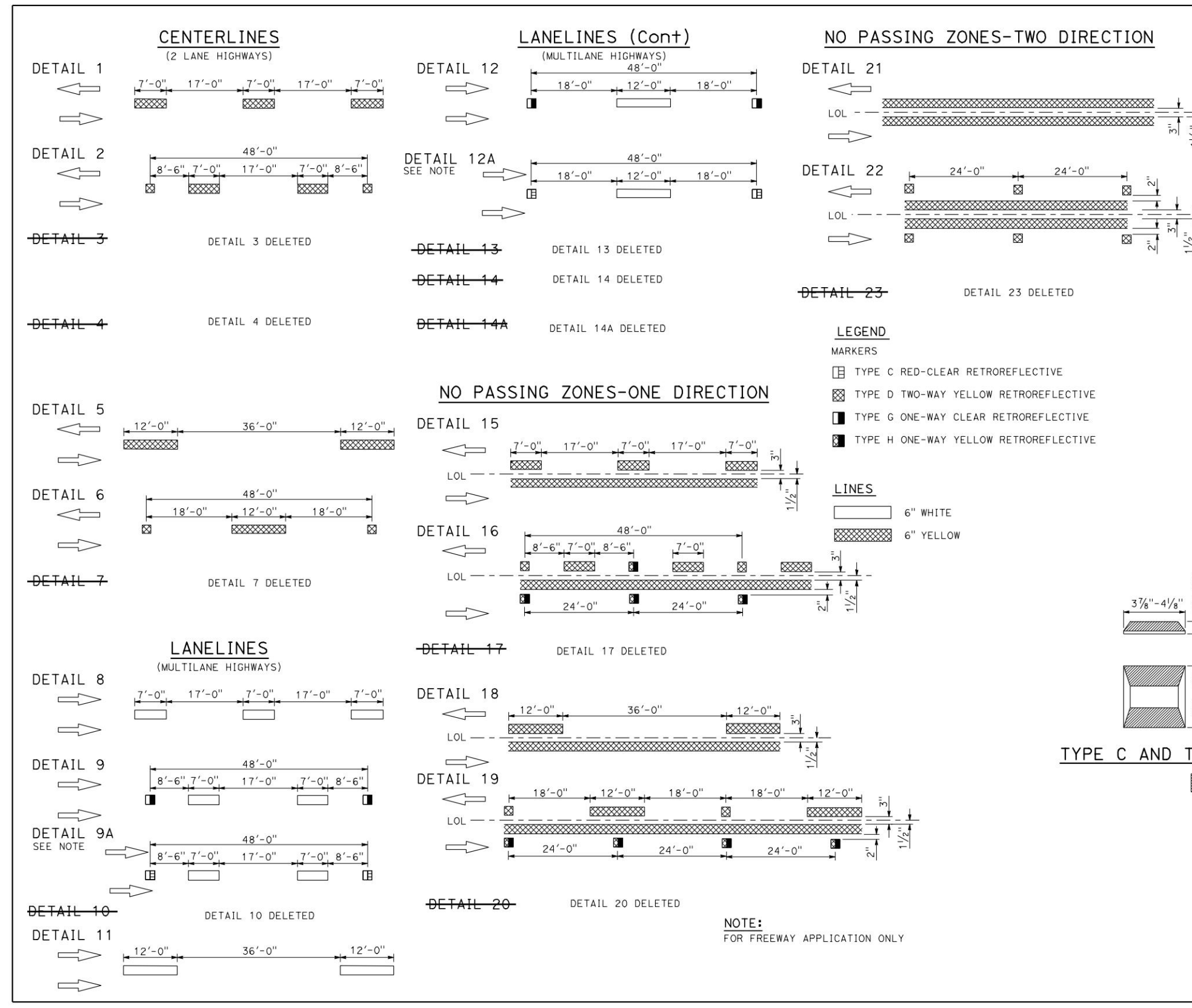

LEGEND

MARKERS

- TYPE C RED-CLEAR RETROREFLECTIVE
- TYPE D TWO-WAY YELLOW RETROREFLECTIVE
- TYPE G ONE-WAY CLEAR RETROREFLECTIVE
- TYPE H ONE-WAY YELLOW RETROREFLECTIVE

LINES

- 6" WHITE
- 6" YELLOW

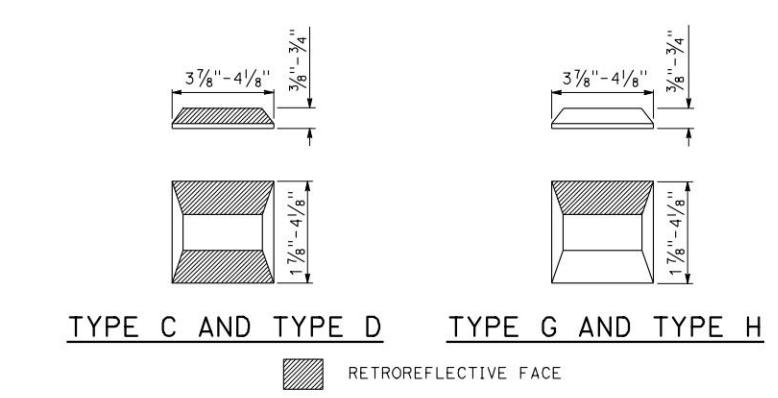

NOTE:
FOR FREEWAY APPLICATION ONLY

Dist	COUNTY	ROUTE	POST MILES TOTAL PROJECT	SHEET No.	TOTAL SHEETS

REGISTERED CIVIL ENGINEER
May 31, 2018
PLANS APPROVAL DATE
Atifa Ferouz No. C80402 Exp. 3-31-19 CIVIL
THE STATE OF CALIFORNIA OR ITS OFFICERS OR AGENTS SHALL NOT BE RESPONSIBLE FOR THE ACCURACY OR COMPLETENESS OF SCANNED COPIES OF THIS PLAN SHEET.

STATE OF CALIFORNIA
DEPARTMENT OF TRANSPORTATION

PAVEMENT MARKERS AND TRAFFIC LINES TYPICAL DETAILS

NO SCALE

A20A

2018 STANDARD PLAN A20A

LEGEND

MARKERS

- TYPE D TWO-WAY YELLOW RETROREFLECTIVE
- TYPE H ONE-WAY YELLOW RETROREFLECTIVE
- TYPE RY RED-YELLOW RETROREFLECTIVE

LINES

- 6" WHITE
- 6" YELLOW

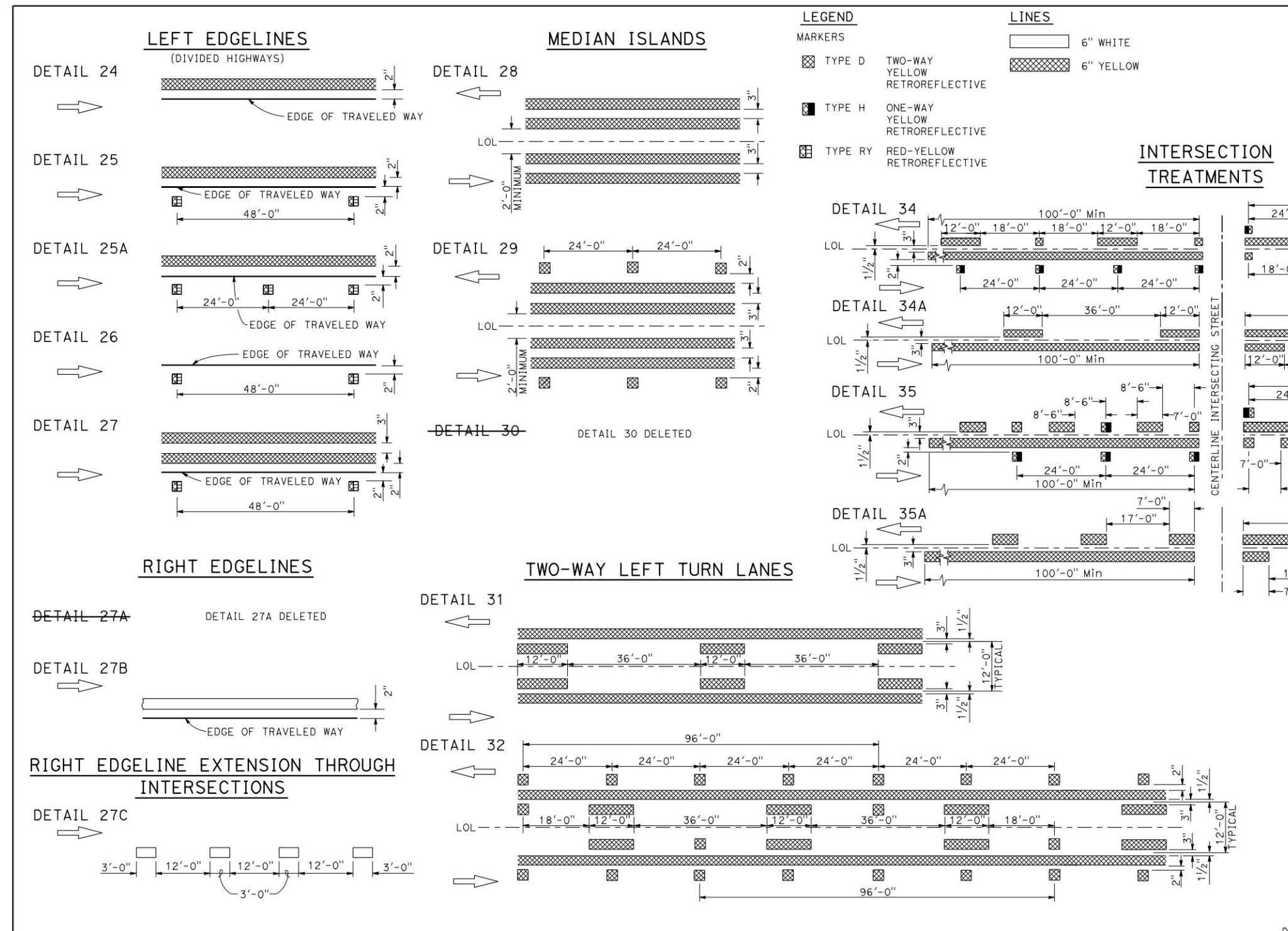

MARKER DETAILS

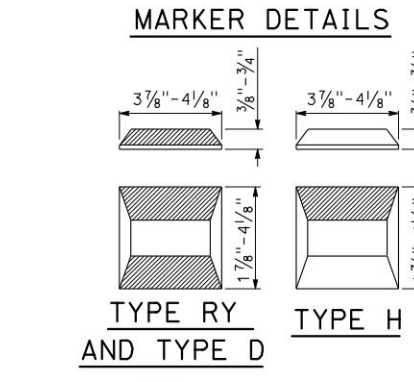

Dist	COUNTY	ROUTE	POST MILES TOTAL PROJECT	SHEET No.	TOTAL SHEETS

REGISTERED CIVIL ENGINEER
May 31, 2018
PLANS APPROVAL DATE
Atifa Ferouz No. C80402 Exp. 3-31-19 CIVIL
THE STATE OF CALIFORNIA OR ITS OFFICERS OR AGENTS SHALL NOT BE RESPONSIBLE FOR THE ACCURACY OR COMPLETENESS OF SCANNED COPIES OF THIS PLAN SHEET.

STATE OF CALIFORNIA
DEPARTMENT OF TRANSPORTATION

PAVEMENT MARKERS AND TRAFFIC LINES TYPICAL DETAILS

NO SCALE

A20B

2018 STANDARD PLAN A20B

05/29/2020

DESIGN T LEWIS
DRAWN M KARBAKHSH
CHECKED T LEWIS
APPROVED M FISHER

WATERWORKS ENGINEERS
2260 Douglas Blvd, Suite 105 •Roseville, CA 95661 • 916-780-2888

CITY OF MORRO BAY
WATER RECLAMATION FACILITY
LIFT STATION AND OFFSITE
PIPELINES

CIVIL DETAILS
CALTRANS STANDARD PLANS

DATE MAY 2020
PROJECT NUMBER 17-082
DRAWING NUMBER 05-CD-12
SHEET NUMBER 104

148

L:\CAD\PROJECTS\17-082 MORRO BAY PS AND PIPELINE_{S}\PROJECT FILES\DELIVERABLES\1782-05CD12.DWG

JOB NUMBER: JOB_NO FILENAME: 1782-05CD12.DWG PLOT DATE: 05/28/20 PLOT TIME: 14:46:33

CONFORMED SET - DEC 2020

CHANNELIZING LINE

DETAIL 38 — 8" WHITE LINE
24'-0" 24'-0" THROUGH TRAFFIC

DETAIL 38A — 8" WHITE LINE

DETAIL 38B — 8" WHITE LINE
24'-0" 24'-0"

~~DETAIL 38C~~ DETAIL 38C DELETED

BIKE LANE LINE

DETAIL 39 — 6" WHITE LINE

INTERSECTION LINE BIKE LANE

DETAIL 39A — 200'-0" INTERSECTION
8'-0" 4'-0" 6" WHITE LINE

LANE LINE EXTENSIONS THROUGH INTERSECTIONS

DETAIL 40 — ~~DETAIL 40A~~ DETAIL 40A DELETED
1'-0" 6'-0" 6" WHITE LINE

CENTER LINE EXTENSIONS THROUGH INTERSECTIONS

DETAIL 41 — ~~DETAIL 41A~~ DETAIL 41A DELETED
1'-0" 6'-0" 6" YELLOW LINE

LEGEND
MARKERS
TYPE C RED-CLEAR RETROREFLECTIVE
TYPE G ONE-WAY CLEAR RETROREFLECTIVE
6" YELLOW LINE

MARKER DETAILS

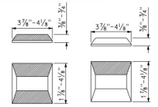

RETROREFLECTIVE FACE

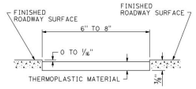

DETAIL FOR RECESSED THERMOPLASTIC TRAFFIC STRIPE

See Notes A and B.

RECESSED THERMOPLASTIC NOTES

A. See typical traffic line details for pavement marking patterns.

B. The top of the thermoplastic installed in recessed pavement shall be 0 to 3/16" below the pavement surface.

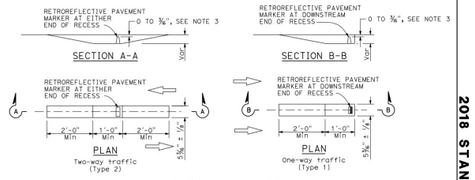

RECESS DETAIL FOR RETROREFLECTIVE PAVEMENT MARKER

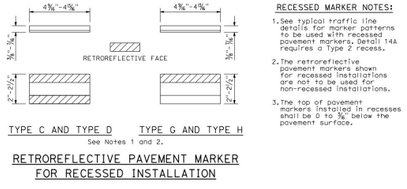

RECESSED MARKER NOTES:

1. See typical traffic line details for marker patterns to be used with recessed pavement markers. Detail 14A requires a Type 2 recess.
2. The retroreflective pavement markers shown for recessed installations are not to be used for non-recessed installations.
3. The top of pavement markers installed in recesses shall be 0 to 3/16" below the pavement surface.

RETROREFLECTIVE PAVEMENT MARKER FOR RECESSED INSTALLATION

STATE OF CALIFORNIA
DEPARTMENT OF TRANSPORTATION

PAVEMENT MARKERS AND TRAFFIC LINES TYPICAL DETAILS

NO SCALE

A20D

2018 STANDARD PLAN A20D

DIST	COUNTY	ROUTE	POST MILES TOTAL PROJECT	SHEET NO.	TOTAL SHEETS

Attila Fernos — REGISTERED CIVIL ENGINEER — May 31, 2018 — PLANS APPROVAL DATE
Attila Fernos C 80402 Exp. 3-31-19 CIVIL STATE OF CALIFORNIA
REGISTERED PROFESSIONAL ENGINEER
THE STATE OF CALIFORNIA OR ITS OFFICERS OR AGENTS SHALL NOT BE RESPONSIBLE FOR THE ACCURACY OR COMPLETENESS OF SCANNED COPIES OF THIS PLAN SHEET.

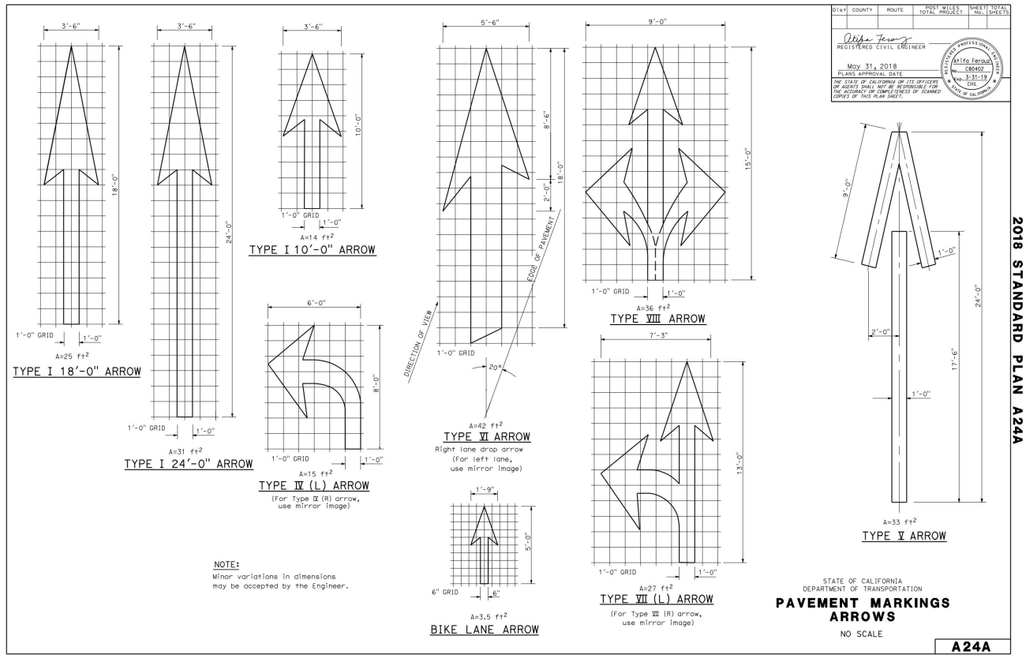

NOTE:
Minor variations in dimensions may be accepted by the Engineer.

STATE OF CALIFORNIA
DEPARTMENT OF TRANSPORTATION

PAVEMENT MARKINGS ARROWS

NO SCALE

A24A

2018 STANDARD PLAN A24A

DIST	COUNTY	ROUTE	POST MILES TOTAL PROJECT	SHEET NO.	TOTAL SHEETS

Attila Fernos — REGISTERED CIVIL ENGINEER — May 31, 2018 — PLANS APPROVAL DATE
Attila Fernos C 80402 Exp. 3-31-19 CIVIL STATE OF CALIFORNIA
REGISTERED PROFESSIONAL ENGINEER
THE STATE OF CALIFORNIA OR ITS OFFICERS OR AGENTS SHALL NOT BE RESPONSIBLE FOR THE ACCURACY OR COMPLETENESS OF SCANNED COPIES OF THIS PLAN SHEET.

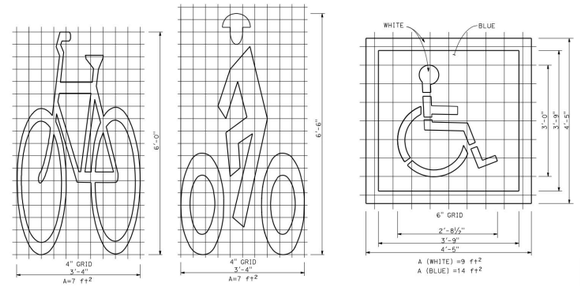

BIKE LANE SYMBOL WITHOUT PERSON

BIKE LANE SYMBOL WITH PERSON

INTERNATIONAL SYMBOL OF ACCESSIBILITY (ISA) MARKING

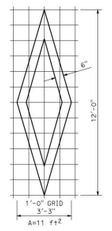

DIAMOND SYMBOL

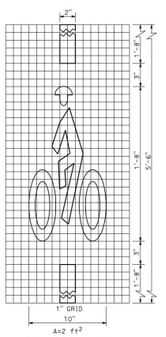

BICYCLE LOOP DETECTOR SYMBOL

NOTE:
Minor variations in dimensions may be accepted by the Engineer.

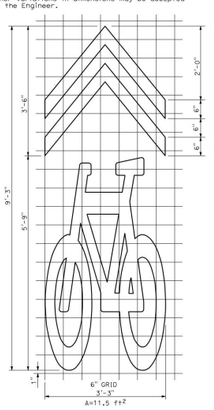

SHARED ROADWAY BICYCLE MARKING

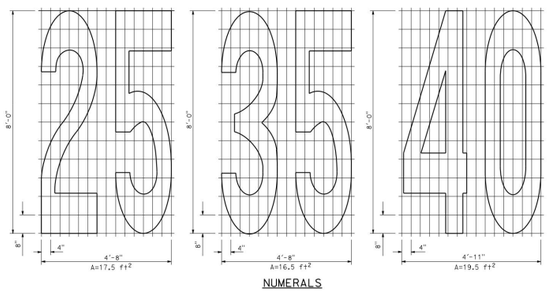

NUMERALS

STATE OF CALIFORNIA
DEPARTMENT OF TRANSPORTATION

PAVEMENT MARKINGS SYMBOLS AND NUMERALS

NO SCALE

A24C

2018 STANDARD PLAN A24C

DIST	COUNTY	ROUTE	POST MILES TOTAL PROJECT	SHEET NO.	TOTAL SHEETS

Attila Fernos — REGISTERED CIVIL ENGINEER — May 31, 2018 — PLANS APPROVAL DATE
Attila Fernos C 80402 Exp. 3-31-19 CIVIL STATE OF CALIFORNIA
REGISTERED PROFESSIONAL ENGINEER
THE STATE OF CALIFORNIA OR ITS OFFICERS OR AGENTS SHALL NOT BE RESPONSIBLE FOR THE ACCURACY OR COMPLETENESS OF SCANNED COPIES OF THIS PLAN SHEET.

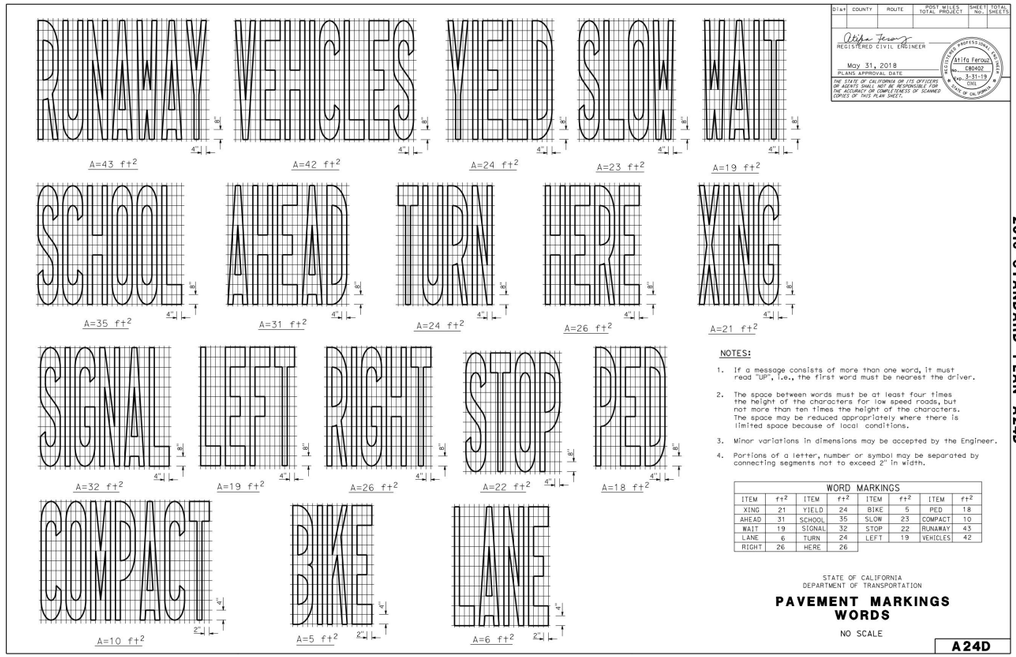

NOTES:

1. If a message consists of more than one word, it must read "UP", i.e., the first word must be nearest the driver.
2. The space between words must be at least four times the height of the characters for low speed roads, but not more than ten times the height of the characters. The space may be reduced appropriately where there is limited space because of local conditions.
3. Minor variations in dimensions may be accepted by the Engineer.
4. Portions of a letter, number or symbol may be separated by connecting segments not to exceed 2" in width.

WORD MARKINGS

ITEM	ft²	ITEM	ft²	ITEM	ft²	ITEM	ft²
XING	21	YIELD	24	BIKE	5	PED	18
AHEAD	31	SCHOOL	35	SLOW	23	COMPACT	10
WAIT	19	SIGNAL	32	STOP	22	RUNAWAY	43
LANE	6	TURN	24	LEFT	19	VEHICLES	42
RIGHT	26	HERE	26				

STATE OF CALIFORNIA
DEPARTMENT OF TRANSPORTATION

PAVEMENT MARKINGS WORDS

NO SCALE

A24D

2018 STANDARD PLAN A24D

DESIGN T LEWIS
DRAWN M KARBAKHSH
CHECKED T LEWIS
APPROVED M FISHER

WATERWORKS ENGINEERS
2260 Douglas Blvd, Suite 105 • Roseville, CA 95661 • 916-780-2888

CITY OF MORRO BAY
WATER RECLAMATION FACILITY
LIFT STATION AND OFFSITE PIPELINES

CIVIL DETAILS
CALTRANS STANDARD PLANS

REGISTERED PROFESSIONAL ENGINEER
MICHAEL J. [illegible]
No. C 71194
CIVIL
STATE OF CALIFORNIA
05/29/2020

DATE MAY 2020
PROJECT NUMBER 17-082
DRAWING NUMBER 05-CD-13
SHEET NUMBER 105

L:\CAD\PROJECTS\17-082 MORRO BAY PS AND PIPELINE_(S)\PROJECT FILES\DELIVERABLES\1782-05CD13.DWG

JOB NUMBER: JOB_NO FILENAME: 1782-05CD13.DWG PLOT DATE: 05/28/20 PLOT TIME: 14:48:23

CONFORMED SET - DEC 2020

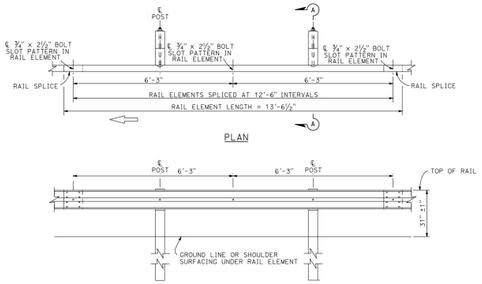

PLAN

ELEVATION

MIDWEST GUARDRAIL SYSTEM WITH WOOD POST AND BLOCKS

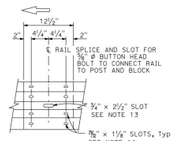

ELEVATION

RAIL ELEMENT SPLICE DETAIL

a) Connect the overlapped end of the rail elements with ⅞" ø x 1⅞" button head oval shoulder splice bolts inserted into the ⅞" x 1⅛" slots and bolted together with ⅞" ø recessed hex nuts. Recess of hex nut points toward rail element. A total of 8 bolts and nuts are to be used at each rail splice connection.

b) The ends of the rail elements are to be overlapped in the direction of traffic (see detail).

c) Where end cap is to be attached to the end of a rail element, a total of 4 of the above described splice bolts and nuts are to be used.

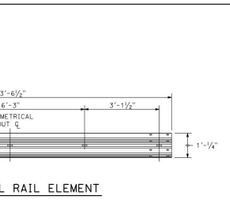

SECTION THRU RAIL ELEMENT

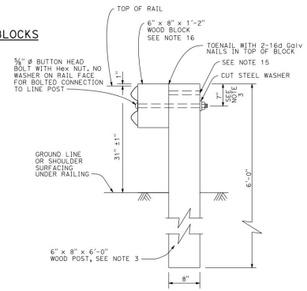

SECTION A-A

TYPICAL WOOD LINE POST INSTALLATION

See Note 4

NOTES:

1. For details of steel post installations, see Revised Standard Plan RSP A77L2.
2. For details of standard hardware used to construct MGS, see Standard Plan A77M1.
3. For details of wood posts and wood blocks used to construct MGS, see Standard Plan A77N1.
4. For additional installation details, see Standard Plan A77N3.
5. MGS post spacing to be 6'-3" center to center, except as otherwise noted.
6. For MGS typical layouts, see the A77P, A77Q and A77R Series of Standard Plans.
7. If railing is connected to terminal system end treatment, use 31" height terminal system end treatment.
8. For MGS end anchor details, see Standard Plans A77S1 and A77T2.
9. For details of MGS transition to bridge railing, see Revised Standard Plan RSP A77U4.
10. For additional details of MGS connection to bridge railing, see Standard Plans A77U1, A77U2 and A77V1.
11. For MGS connection details to abutments and walls, see Standard Plan A77U3.
12. For typical MGS delineation and dike positioning details, see Revised Standard Plan RSP A77N4.
13. Slotted hole for bolted connection of rail element to block and post.
14. Slotted holes for splice bolts to overlap ends of rail element.
15. Additional hole in uppermost portion of line post is for potential future adjustments of railing height. See Standard Plan A77N7.
16. 6" x 12" x 1'-2" block must be used with 6" dike.
17. Install posts in soil.

STATE OF CALIFORNIA
DEPARTMENT OF TRANSPORTATION

MIDWEST GUARDRAIL SYSTEM STANDARD RAILING SECTION (WOOD POST WITH WOOD BLOCK)

NO SCALE

RSP A77L1 DATED APRIL 19, 2019 SUPERSEDES STANDARD PLAN A77L1 DATED MAY 31, 2018 - PAGE 57 OF THE STANDARD PLANS BOOK DATED 2018.

REVISED STANDARD PLAN RSP A77L1

2018 REVISED STANDARD PLAN RSP A77L1

Dist	COUNTY	ROUTE	POST MILES TOTAL PROJECT	SHEET TOTAL No. SHEETS

Randall D. Hiatt
REGISTERED CIVIL ENGINEER
April 19, 2019
PLANS APPROVAL DATE
Randall D. Hiatt No. C50200 Exp. 6-30-19 CIVIL STATE OF CALIFORNIA
THE STATE OF CALIFORNIA OR ITS OFFICERS OR AGENTS SHALL NOT BE RESPONSIBLE FOR THE ACCURACY OR COMPLETENESS OF SCANNED COPIES OF THIS PLAN SHEET.

TO ACCOMPANY PLANS DATED

TYPICAL RAIL ELEMENT

NOTE:

1. Slotted holes for splice bolts to overlap ends of rail element.

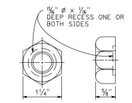

⅝" ø RECESS NUT

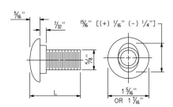

⅝" ø BUTTON HEAD BOLT

BUTTON HEAD BOLT

L	THREAD LENGTH
1⅜"	FULL THREAD LENGTH
2"	FULL THREAD LENGTH
10"	4" Min THREAD LENGTH
18"	4" Min THREAD LENGTH
20"	4" Min THREAD LENGTH
22"	4" Min THREAD LENGTH
26"	4" Min THREAD LENGTH
36"	4" Min THREAD LENGTH
** 2¾"	2" Min THREAD LENGTH
** 19"	4" Min THREAD LENGTH

** For nested rail applications.



PLAN

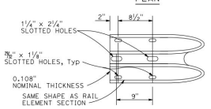

ELEVATION

END CAP (TYPE A)

STATE OF CALIFORNIA
DEPARTMENT OF TRANSPORTATION

MIDWEST GUARDRAIL SYSTEM STANDARD HARDWARE

NO SCALE

A77M1

2018 STANDARD PLAN A77M1

Dist	COUNTY	ROUTE	POST MILES TOTAL PROJECT	SHEET TOTAL No. SHEETS

Randall D. Hiatt
REGISTERED CIVIL ENGINEER
May 31, 2018
PLANS APPROVAL DATE
Randall D. Hiatt No. C50200 Exp. 6-30-19 CIVIL STATE OF CALIFORNIA
THE STATE OF CALIFORNIA OR ITS OFFICERS OR AGENTS SHALL NOT BE RESPONSIBLE FOR THE ACCURACY OR COMPLETENESS OF SCANNED COPIES OF THIS PLAN SHEET.

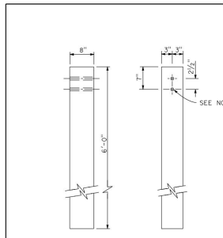

6" x 8" WOOD POST

See Note 3

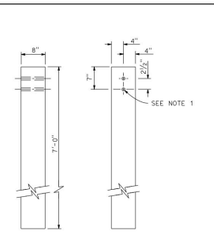

8" x 8" WOOD POST

See Note 4

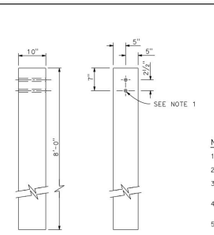

10" x 10" WOOD POST

See Note 5

NOTES:

1. All holes in wood posts and blocks shall be ¾" Dia ± ⅛".
2. Dimensions shown for wood post are nominal.
3. This post and block combination used for standard line post sections of MGS.
4. This post and 8" x 8" block combination used for line post sections of MGS on narrow roadways.
5. This post and 8" x 8" block combination is typically used where strengthened line post sections of MGS are warranted to shield fixed objects.
6. See Standard Plan A77L3 for use of 6" x 8" and 8" x 8" wood blocks.
7. To be used with 8" x 8" x 7'-0" wood post if installed with 6" height dike.
8. To be used with 6" x 8" x 6'-0" wood post if installed with 6" height dike.

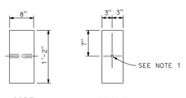

6" x 8" WOOD BLOCK

See Note 6 and Note 3

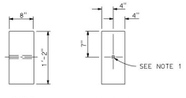

8" x 8" WOOD BLOCK

See Note 6 and Note 4

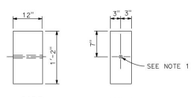

6" x 12" WOOD BLOCK

See Note 8

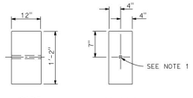

8" x 12" WOOD BLOCK

See Note 7

STATE OF CALIFORNIA
DEPARTMENT OF TRANSPORTATION

MIDWEST GUARDRAIL SYSTEM WOOD POST AND WOOD BLOCK DETAILS

NO SCALE

RSP A77N1 DATED OCTOBER 18, 2019 SUPERSEDES STANDARD PLAN A77N1 DATED MAY 31, 2018 - PAGE 61 OF THE STANDARD PLANS BOOK DATED 2018.

REVISED STANDARD PLAN RSP A77N1

2018 REVISED STANDARD PLAN RSP A77N1

Dist	COUNTY	ROUTE	POST MILES TOTAL PROJECT	SHEET TOTAL No. SHEETS

Randall D. Hiatt
REGISTERED CIVIL ENGINEER
October 18, 2019
PLANS APPROVAL DATE
Randall D. Hiatt No. C50200 Exp. 6-30-21 CIVIL STATE OF CALIFORNIA
THE STATE OF CALIFORNIA OR ITS OFFICERS OR AGENTS SHALL NOT BE RESPONSIBLE FOR THE ACCURACY OR COMPLETENESS OF SCANNED COPIES OF THIS PLAN SHEET.

TO ACCOMPANY PLANS DATED

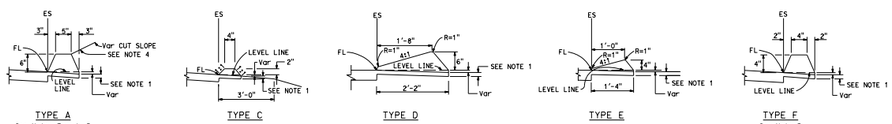

DIKES

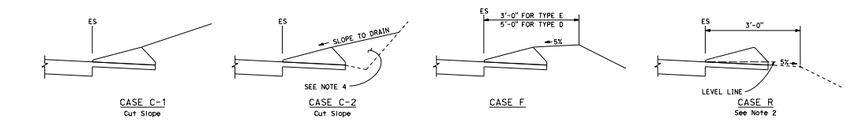

TYPE D AND E BACKFILL DETAILS

NOTES:

1. For HMA shoulders only, extend top layer of HMA placed on the shoulder under dike with no joint at the ES. For projects with OGFC shoulders, do not extend OGFC under dike. See project plans for modified dike detail.
2. Case R applies to retrofit only projects where restrictive conditions do not provide enough width for Case F backfill.
3. Type A dike only to be used where restrictive slope conditions do not provide enough width to use Type D or Type E dike.
4. Fill and compact with excavated material to top of dike.
5. Use Type A or F dike, where dike is required with guardrail installations. See Standard Plan A77N4 for dike positioning details. See Standard Plan A77N3 for hinge point offsets with guardrail.

DIKE QUANTITIES

TYPE	CUBIC YARDS PER LINEAR FOOT
A	0.0135
C	0.0038
D	0.0293
E	0.0150
F	0.0066

Quantities based on 5% cross slope.

STATE OF CALIFORNIA
DEPARTMENT OF TRANSPORTATION

HOT MIX ASPHALT DIKES

NO SCALE

A87B

2018 STANDARD PLAN A87B

149



05/29/2020

DESIGN T LEWIS
DRAWN M KARBAKHSH
CHECKED T LEWIS
APPROVED M FISHER

WATERWORKS ENGINEERS
2260 Douglas Blvd, Suite 105 • Roseville, CA 95661 • 916-780-2888

CITY OF MORRO BAY
WATER RECLAMATION FACILITY
LIFT STATION AND OFFSITE PIPELINES

CIVIL DETAILS
CALTRANS STANDARD PLANS

DATE MAY 2020
PROJECT NUMBER 17-082
DRAWING NUMBER 05-CD-14
SHEET NUMBER 106

L:\CAD\PROJECTS\17-082 MORRO BAY PS AND PIPELINE_(S)\PROJECT FILES\DELIVERABLES\1782-05CD14.DWG

CONFORMED SET - DEC 2020

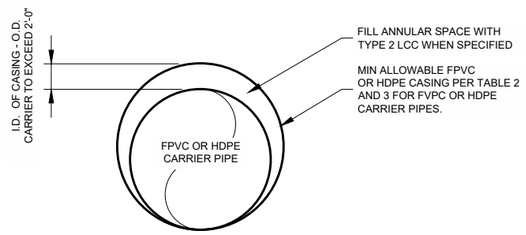

1 OPEN CUT CONSTRUCTION CASING

- NTS

TABLE 2: MINIMUM ALLOWABLE CASING FOR FPVC CARRIERS (DIPS)

USING FPVC CARRIER (DIPS)		MINIMUM ALLOWABLE DR-21 HDPE CASING (IPS)		
Nom. Size	O.D. (in)	Nom. Size	I.D. (in)	I.D. - O.D. >2 (in)
4"	4.80	8"	7.75	2.95
6"	6.90	10"	9.66	2.76
8"	9.05	12.00	11.46	2.41
10"	11.10	16.00	14.38	3.28
12"	13.20	18.00	16.18	2.98
16"	17.40	22.00	19.78	2.38
18"	19.50	24.00	21.58	2.08
20"	21.60	28.00	25.17	3.57

TABLE 3: MINIMUM ALLOWABLE CASING FOR HDPE CARRIERS (IPS)

USING HDPE CARRIER (IPS)		MINIMUM ALLOWABLE DR-21 HDPE CASING (IPS)		
Nom. Size	O.D. (in)	Nom. Size	I.D. (in)	I.D. - O.D. >2 (in)
4"	4.50	8"	7.75	3.25
6"	6.63	10"	9.66	3.03
10"	10.75	16.00	14.38	3.63
12"	12.75	18.00	16.18	3.43
14"	14.00	20.00	17.98	3.98
18"	18.00	24.00	21.58	3.58
20"	20.00	26.00	23.38	3.38
22"	22.00	28.00	25.17	3.17
24"	24.00	30.00	26.97	2.97

TABLE 2: MINIMUM ALLOWABLE CASING FOR FPVC CARRIERS (DIPS)

USING FPVC CARRIER (DIPS)		MINIMUM ALLOWABLE DR-25 FPVC CASING (DIPS)		
Nom. Size	O.D. (in)	Nom. Size	Req'd I.D. (in)	I.D. - O.D. >2 (in)
4"	4.80	8"	8.28	3.48
6"	6.90	10"	10.16	3.26
8"	9.05	12"	12.08	3.03
10"	11.10	14"	14.00	2.90
12"	13.20	16"	15.92	2.72
16"	17.40	20"	19.77	2.37
18"	19.50	24"	24.12	4.62
20"	21.60	24"	24.12	2.52

TABLE 3: MINIMUM ALLOWABLE CASING FOR HDPE CARRIERS (IPS)

USING HDPE CARRIER (IPS)		MINIMUM ALLOWABLE DR-25 FPVC CASING (DIPS)		
Nom. Size	O.D. (in)	Nom. Size	Req'd I.D. (in)	I.D. - O.D. >2 (in)
4"	4.50	8"	8.28	3.78
6"	6.63	10"	10.16	3.53
10"	10.75	14"	14.00	3.25
12"	12.75	16"	15.92	3.17
14"	14.00	18"	17.85	3.85
18"	18.00	24"	24.12	6.12
20"	20.00	24"	24.12	4.12
22"	22.00	24"	24.12	2.12
24"	24.00	30"	29.29	5.29

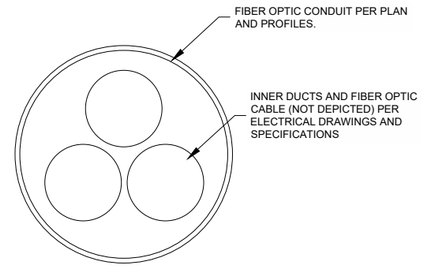

7 FIBER OPTIC CONDUIT

- NTS

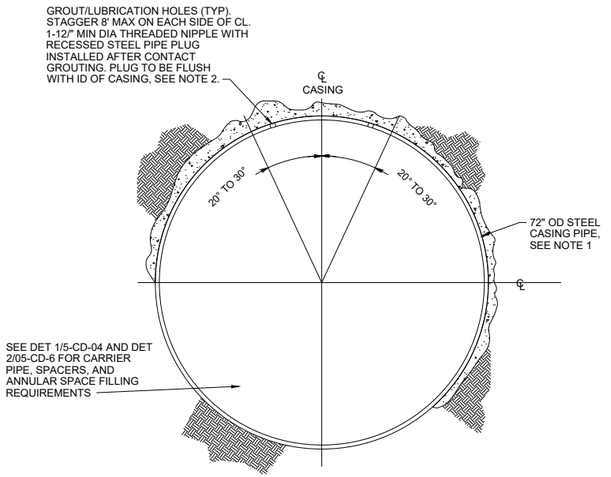

STEEL CASING CROSS SECTION

NOTES:

1. STEEL CASING JOINTS SHALL BE PERMALOK OR WELDED AND APPROVED IN ACCORDANCE WITH SECTION 02445 OF THE SPECIFICATIONS.
2. CONTACT GROUTING SHALL BE IN ACCORDANCE WITH SPEC 03320. ANNULAR SPACE FILLING SHALL BE IN ACCORDANCE WITH SPEC 02350

2 TRENCHLESS CONSTRUCTION CASING

- NTS

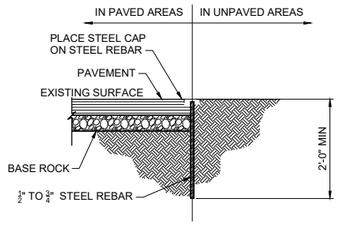

3 GROUND MOVEMENT MONITORING POINT (GMMP)

- NTS

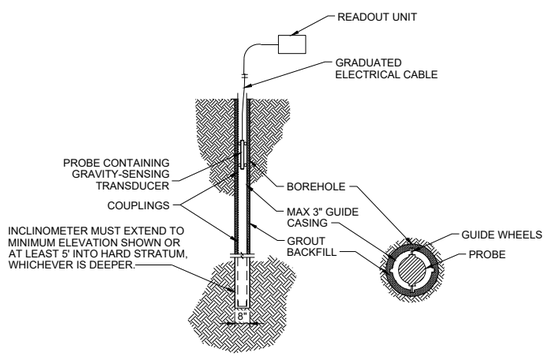

4 INCLINOMETER

- NTS

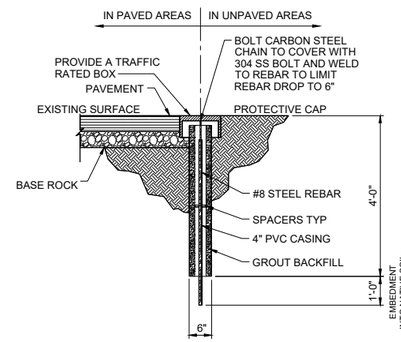

5 SUB-SURFACE SETTLEMENT MONITORING POINT (SSMP)

- NTS

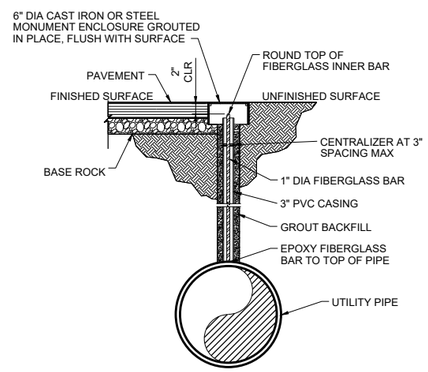

6 UTILITY MONITORING POINT (UMP)

- NTS



05/29/2020

DESIGN T LEWIS
DRAWN B TROTTER
CHECKED T LEWIS
APPROVED M FISHER

WATERWORKS ENGINEERS
2260 Douglas Blvd, Suite 105 • Roseville, CA 95661 • 916-780-2888

CITY OF MORRO BAY
WATER RECLAMATION FACILITY
LIFT STATION AND OFFSITE PIPELINES

CIVIL DETAILS
CASING AND GEOTECHNICAL INSTRUMENTATION DETAILS

DATE MAY 2020
PROJECT NUMBER 17-082
DRAWING NUMBER 05-CD-15
SHEET NUMBER 107

JOB NUMBER: 17-082 FILENAME: 1782-05CD15.DWG PLOT DATE: 05/29/20 PLOT TIME: 16:31:40

W:\CAD\PROJECTS\17-082 MORRO BAY PS AND PIPELINE_(S)\PROJECT FILES\DELIVERABLES\1782-05CD15.DWG

CONFORMED SET - DEC 2020

NORTH

100 0 100 200 FEET
HORIZSCALE 1"=100'

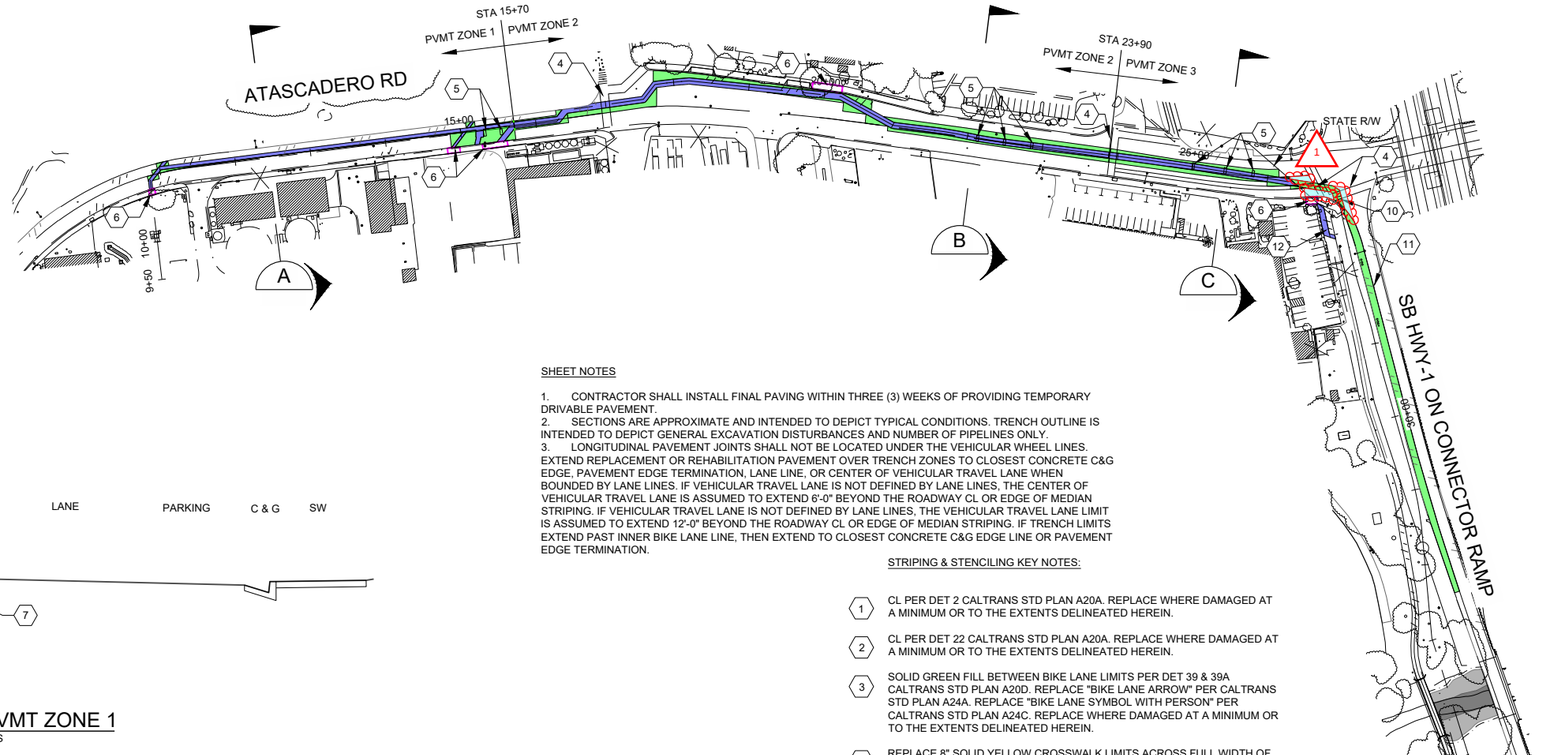

A PVMT ZONE 1
-- NTS

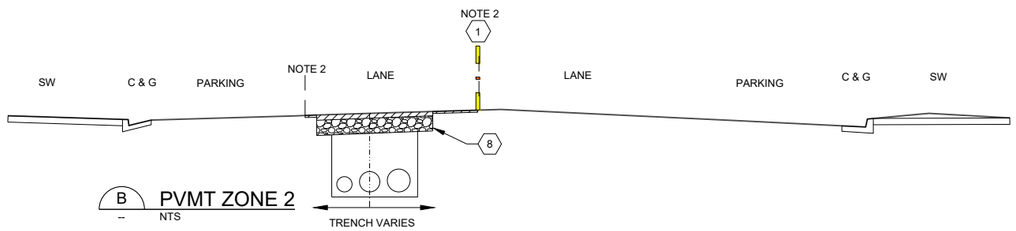

B PVMT ZONE 2
-- NTS

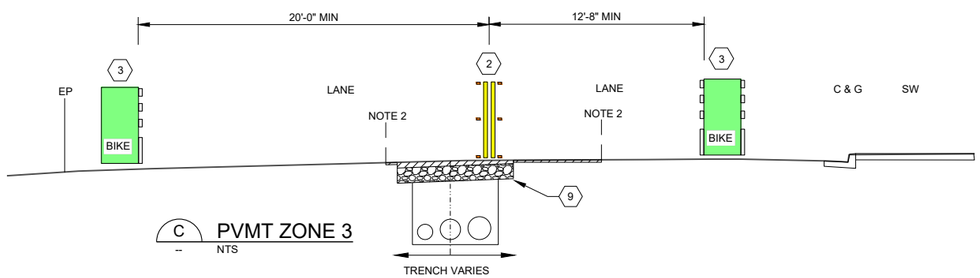

C PVMT ZONE 3
-- NTS

SHEET NOTES

1. CONTRACTOR SHALL INSTALL FINAL PAVING WITHIN THREE (3) WEEKS OF PROVIDING TEMPORARY DRIVABLE PAVEMENT.
2. SECTIONS ARE APPROXIMATE AND INTENDED TO DEPICT TYPICAL CONDITIONS. TRENCH OUTLINE IS INTENDED TO DEPICT GENERAL EXCAVATION DISTURBANCES AND NUMBER OF PIPELINES ONLY.
3. LONGITUDINAL PAVEMENT JOINTS SHALL NOT BE LOCATED UNDER THE VEHICULAR WHEEL LINES. EXTEND REPLACEMENT OR REHABILITATION PAVEMENT OVER TRENCH ZONES TO CLOSEST CONCRETE C&G EDGE, PAVEMENT EDGE TERMINATION, LANE LINE, OR CENTER OF VEHICULAR TRAVEL LANE WHEN BOUNDED BY LANE LINES. IF VEHICULAR TRAVEL LANE IS NOT DEFINED BY LANE LINES, THE CENTER OF VEHICULAR TRAVEL LANE IS ASSUMED TO EXTEND 6'-0" BEYOND THE ROADWAY CL OR EDGE OF MEDIAN STRIPING. IF VEHICULAR TRAVEL LANE IS NOT DEFINED BY LANE LINES, THE VEHICULAR TRAVEL LANE LIMIT IS ASSUMED TO EXTEND 12'-0" BEYOND THE ROADWAY CL OR EDGE OF MEDIAN STRIPING. IF TRENCH LIMITS EXTEND PAST INNER BIKE LANE LINE, THEN EXTEND TO CLOSEST CONCRETE C&G EDGE LINE OR PAVEMENT EDGE TERMINATION.

STRIPING & STENCILING KEY NOTES:

1. CL PER DET 2 CALTRANS STD PLAN A20A. REPLACE WHERE DAMAGED AT A MINIMUM OR TO THE EXTENTS DELINEATED HEREIN.
2. CL PER DET 22 CALTRANS STD PLAN A20A. REPLACE WHERE DAMAGED AT A MINIMUM OR TO THE EXTENTS DELINEATED HEREIN.
3. SOLID GREEN FILL BETWEEN BIKE LANE LIMITS PER DET 39 & 39A CALTRANS STD PLAN A20D. REPLACE "BIKE LANE ARROW" PER CALTRANS STD PLAN A24A. REPLACE "BIKE LANE SYMBOL WITH PERSON" PER CALTRANS STD PLAN A24C. REPLACE WHERE DAMAGED AT A MINIMUM OR TO THE EXTENTS DELINEATED HEREIN.
4. REPLACE 8" SOLID YELLOW CROSSWALK LIMITS ACROSS FULL WIDTH OF STREET.
5. REPLACE MESSAGE "SLOW SCHOOL XING" PER CALTRANS STD DETAIL A24D

CONCRETE FLAT WORK, CURBS, & GUTTER REPLACEMENT KEYNOTES

6. REPLACE 113-LF SIDEWALK PER CITY STD DET B-5 AND CURB & GUTTER PER CITY STD DET B-1. MATCH EXISTING SIDEWALK WIDTH AND CURB & GUTTER STYLE. CONFORM TO EXISTING ELEVATIONS.

PAVEMENT REPLACEMENT & REHABILITATION KEY NOTES

KEY NOTES	PVMT ZONE	STA TO STA	AREA (SF)	A.C. THICKNESS / TOT VOL. (CY)	A.B. THICKNESS	DWG OR DETAIL REFERENCE	BID ITEM / UNIT TYPE
7	1	10+10 TO 15+70	2713	3" / 26.0	8"	DET 4 / 05-CD-10	61 / CY
			1243	1.5" / 6.0	N/A	DET 4 / 05-CD-10	62 / CY
			533	3" / 5.0	8"	DET 4 / 05-CD-10	63 / CY
8	2	15+70 TO 23+90	6737	3" / 63.0	8"	DET 4 / 05-CD-10	61 / CY
			4350	1.5" / 21.0	N/A	DET 4 / 05-CD-10	62 / CY
			1864	3" / 18.0	8"	DET 4 / 05-CD-10	63 / CY
9	3	23+90 TO 26+35	2065	4" / 26.0	8"	DET 4 / 05-CD-10	61 / CY
			1447	1.5" / 7.0	N/A	DET 4 / 05-CD-10	62 / CY
			620	4" / 8.0	8"	DET 4 / 05-CD-10	63 / CY
1 10	N/A	26+35 TO 27+10	710	3" / 6.6	N/A	DET 1/05-CD-11	64 / CY
			664	7" / 15.0	N/A	DET 1/05-CD-11	64 / CY
11	N/A	27+10 TO 31+50	4720	7" / 102.0	12"	05-CD-02	64 / CY
12	N/A		354	3" / 4.0	8"	DET 3 / 05-CD-10	60 / CY

SEE PLAN AND PROFILES FOR BIKE PATH REPLACEMENT

MATCH LINE
SEE SHEET 06-C-2

REGISTERED PROFESSIONAL ENGINEER
MICHAEL P. WEBSTER
No. C67194
CIVIL
STATE OF CALIFORNIA
05/29/2020

DESIGN P WEBSTER
DRAWN P WEBSTER
CHECKED T LEWIS
APPROVED M FISHER

WATERWORKS ENGINEERS
2260 Douglas Blvd, Suite 105 • Roseville, CA 95661 • 916-780-2888

CITY OF MORRO BAY
WATER RECLAMATION FACILITY
LIFT STATION AND OFFSITE PIPELINES

CIVIL
PAVEMENT REPLACEMENT AND REHABILITATION PLAN
STA 10+00 TO STA 42+50

DATE MAY 2020
PROJECT NUMBER 17-082
DRAWING NUMBER 06-C-1
SHEET NUMBER 108

JOB NUMBER: 17-082 FILENAME: 1782D-06C101.DWG PLOT DATE: 06/2/20 PLOT TIME: 00:03:27

W:\CAD\PROJECTS\17-082 MORRO BAY PS AND PIPELINE_(S)\PROJECT FILES\DELIVERABLES\1782D-06C101.DWG

CONFORMED SET - DEC 2020

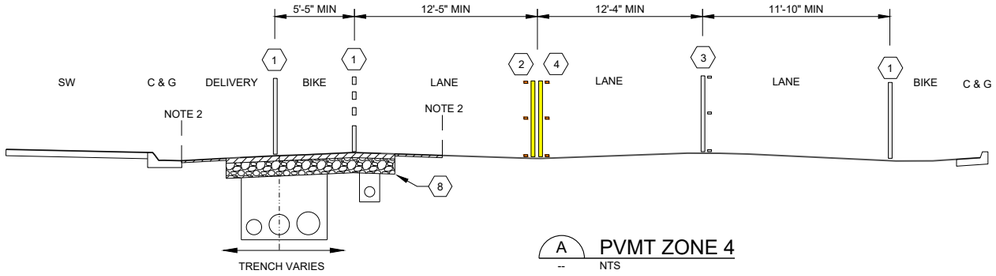

A PVMT ZONE 4
-- NTS

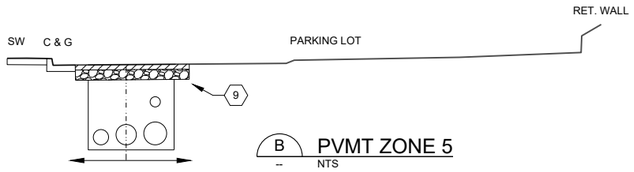

B PVMT ZONE 5
-- NTS

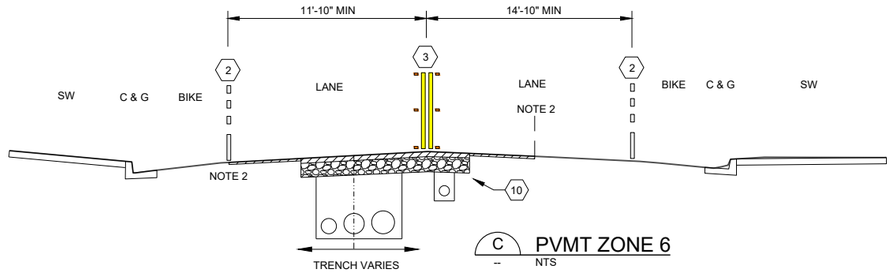

C PVMT ZONE 6
-- NTS

100 0 100 200 FEET
HORIZSCALE 1"=100'

NORTH

SHEET NOTES

1. CONTRACTOR SHALL INSTALL FINAL PAVING WITHIN THREE (3) WEEKS OF PROVIDING TEMPORARY DRIVABLE PAVEMENT.
2. SECTIONS ARE APPROXIMATE AND INTENDED TO DEPICT TYPICAL CONDITIONS. TRENCH OUTLINE IS INTENDED TO DEPICT GENERAL EXCAVATION DISTURBANCES AND NUMBER OF PIPELINES ONLY.
3. LONGITUDINAL PAVEMENT JOINTS SHALL NOT BE LOCATED UNDER THE VEHICULAR WHEEL LINES. EXTEND REPLACEMENT OR REHABILITATION PAVEMENT OVER TRENCH ZONES TO CLOSEST CONCRETE C&G EDGE, PAVEMENT EDGE TERMINATION, LANE LINE, OR CENTER OF VEHICULAR TRAVEL LANE WHEN BOUNDED BY LANE LINES. IF VEHICULAR TRAVEL LANE IS NOT DEFINED BY LANE LINES, THE CENTER OF VEHICULAR TRAVEL LANE IS ASSUMED TO EXTEND 6'-0" BEYOND THE ROADWAY CL OR EDGE OF MEDIAN STRIPING. IF VEHICULAR TRAVEL LANE IS NOT DEFINED BY LANE LINES, THE VEHICULAR TRAVEL LANE LIMIT IS ASSUMED TO EXTEND 12'-0" BEYOND THE ROADWAY CL OR EDGE OF MEDIAN STRIPING. IF TRENCH LIMITS EXTEND PAST INNER BIKE LANE LINE, THEN EXTEND TO CLOSEST CONCRETE C&G EDGE LINE OR PAVEMENT EDGE TERMINATION.

STRIPING AND STENCILING KEY NOTES:

1. BIKE LANE LIMITS PER DETAILS 39/39A CALTRANS STD PLAN A20D, "BIKE LANE ARROW" PER CALTRANS STD PLAN A24A, "BIKE LANE SYMBOL WITH PERSON" PER CALTRANS STD PLAN A24C. REPLACE WHERE DAMAGED AT A MINIMUM OR TO THE EXTENTS DELINEATED HEREIN.
2. CL PER DET 22 CALTRANS STD PLAN A20A. REPLACE WHERE DAMAGED AT A MINIMUM OR TO THE EXTENTS DELINEATED HEREIN.
3. DET 38 CALTRANS STD PLAN A20D. REPLACE WHERE DAMAGED AT A MINIMUM OR TO THE EXTENTS DELINEATED HEREIN.
4. REPLACE AND MATCH DIRECTIONAL ARROWS PER CALTRANS STD PLAN A24A IF DAMAGED
5. REPLACE MESSAGE "SIGNAL AHEAD" PER CALTRANS STD DETAIL A24D

CONCRETE FLAT WORK, CURBS, & GUTTER REPLACEMENT KEYNOTES

6. REPLACE 135-LF SIDEWALK PER CITY STD DET B-5 AND CURB & GUTTER PER CITY STD DET B-1. REPLACE CURB RAMP PER CALTRANS STD A88A. MATCH EXISTING SIDEWALK WIDTH AND CURB & GUTTER STYLE. CONFORM TO EXISTING ELEVATIONS.

PAVEMENT REPLACEMENT AND REHABILITATION KEY NOTES

KEY NOTES	PVMT ZONE	STA TO STA	AREA (SF)	A.C. THICKNESS / TOT VOL. (CY)	A.B. THICKNESS	DWG OR DETAIL REFERENCE	BID ITEM / UNIT TYPE
7	N/A	53+50 TO 56+00	3346	3" / 31.0	8"	DET 3 / 05-CD-10	60 / CY
8	4	56+00 TO 61+65	5512	4" / 69.0	8"	DET 4 / 05-CD-10	61 / CY
			3971	1.5" / 19.0	N/A	DET 4 / 05-CD-10	62 / CY
			1702	4" / 22.0	8"	DET 4 / 05-CD-10	63 / CY
9	5	61+65 TO 63+80	1576	3" / 15.0	8"	DET 3 / 05-CD-10	60 / CY
10	6	63+80 TO 70+00	7618	4" / 95.0	8"	DET 4 / 05-CD-10	61 / CY
			2986	1.5" / 14.0	N/A	DET 4 / 05-CD-10	62 / CY
			1280	4" / 16.0	8"	DET 4 / 05-CD-10	63 / CY
11	N/A	N/A	793	3" / 8.0	8"	DET 3 / 05-CD-10	60 / CY

DESIGN P WEBSTER
DRAWN P WEBSTER
CHECKED T LEWIS
APPROVED M FISHER

WATERWORKS ENGINEERS
2260 Douglas Blvd, Suite 105 • Roseville, CA 95661 • 916-780-2888

CITY OF MORRO BAY
WATER RECLAMATION FACILITY
LIFT STATION AND OFFSITE PIPELINES

CIVIL
PAVEMENT REPLACEMENT AND REHABILITATION PLAN
STA 42+50 TO STA 70+00

REGISTERED PROFESSIONAL ENGINEER
MICHAEL P. FISHER
No. C67194
CIVIL
STATE OF CALIFORNIA
05/29/2020

DATE MAY 2020
PROJECT NUMBER 17-082
DRAWING NUMBER 06-C-2
SHEET NUMBER 109

W:\CAD\PROJECTS\17-082 MORRO BAY PS AND PIPELINE_(S)\PROJECT FILES\DELIVERABLES\1782D-06C101.DWG

JOB NUMBER: 17-082 FILENAME: 1782D-06C101.DWG PLOT DATE: 06/2/20 PLOT TIME: 00:04:17

CONFORMED SET - DEC 2020



100 0 100 200 FEET
HORIZSCALE 1"=100'

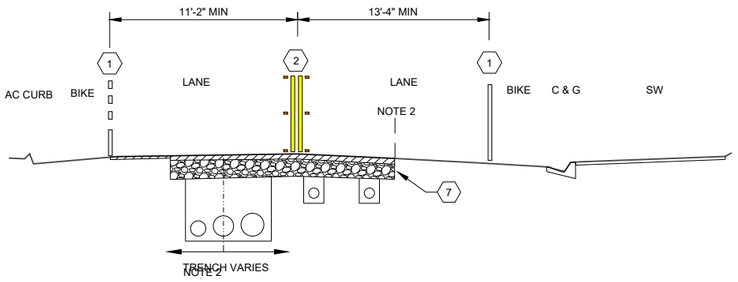

A PVMT ZONE 7
-- NTS

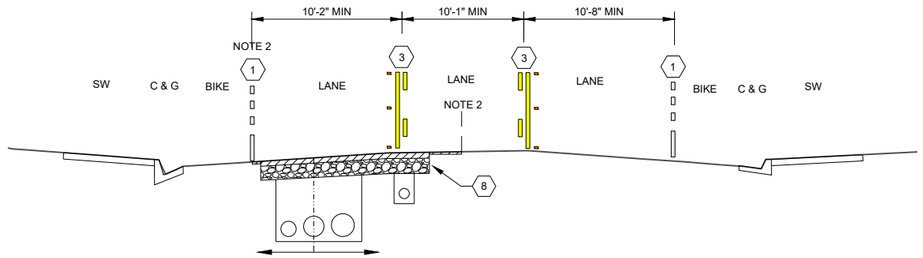

B PVMT ZONE 8
-- NTS

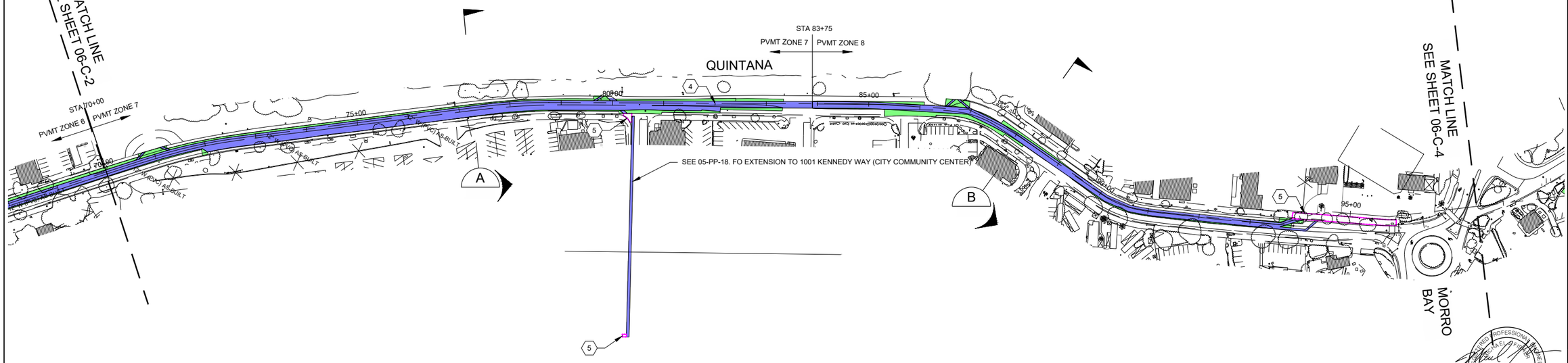

SHEET NOTES

1. CONTRACTOR SHALL INSTALL FINAL PAVING WITHIN THREE (3) WEEKS OF PROVIDING TEMPORARY DRIVABLE PAVEMENT.
2. SECTIONS ARE APPROXIMATE AND INTENDED TO DEPICT TYPICAL CONDITIONS. TRENCH OUTLINE IS INTENDED TO DEPICT GENERAL EXCAVATION DISTURBANCES AND NUMBER OF PIPELINES ONLY.
3. LONGITUDINAL PAVEMENT JOINTS SHALL NOT BE LOCATED UNDER THE VEHICULAR WHEEL LINES. EXTEND REPLACEMENT OR REHABILITATION PAVEMENT OVER TRENCH ZONES TO CLOSEST CONCRETE C&G EDGE, PAVEMENT EDGE TERMINATION, LANE LINE, OR CENTER OF VEHICULAR TRAVEL LANE WHEN BOUNDED BY LANE LINES. IF VEHICULAR TRAVEL LANE IS NOT DEFINED BY LANE LINES, THE CENTER OF VEHICULAR TRAVEL LANE IS ASSUMED TO EXTEND 6'-0" BEYOND THE ROADWAY CL OR EDGE OF MEDIAN STRIPING. IF VEHICULAR TRAVEL LANE IS NOT DEFINED BY LANE LINES, THE VEHICULAR TRAVEL LANE LIMIT IS ASSUMED TO EXTEND 12'-0" BEYOND THE ROADWAY CL OR EDGE OF MEDIAN STRIPING. IF TRENCH LIMITS EXTEND PAST INNER BIKE LANE LINE, THEN EXTEND TO CLOSEST CONCRETE C&G EDGE LINE OR PAVEMENT EDGE TERMINATION.

STRIPING & STENCILING KEY NOTES:

1. BIKE LANE LIMITS PER DETAILS 39/39A CALTRANS STD PLAN A20D, "BIKE LANE ARROW" PER CALTRANS STD PLAN A24A, "BIKE LANE SYMBOL WITH PERSON" PER CALTRANS STD PLAN A24C. REPLACE WHERE DAMAGED AT A MINIMUM OR TO THE EXTENTS DELINEATED HEREIN.
2. CL PER DET 22 CALTRANS STD PLAN A20A. REPLACE WHERE DAMAGED AT A MINIMUM OR TO THE EXTENTS DELINEATED HEREIN.
3. TWO WAY LEFT TURN PER DET 32 CALTRANS STD PLAN A20D. REPLACE WHERE DAMAGED AT A MINIMUM OR TO THE EXTENTS DELINEATED HEREIN.
4. REPLACE MEDIAN ISLAND WITH DIAGONAL FILL PER DET 29 CALTRANS STD PLAN A20B

CONCRETE FLAT WORK, CURBS, & GUTTER REPLACEMENT KEYNOTES

5. REPLACE 230-LF SIDEWALK PER CITY STD DET B-5 AND CURB & GUTTER PER CITY STD DET B-1. REPLACE CROSS GUTTER AND SPANDREL PER CITY STD DETAIL B-3. REPLACE DRIVEWAY PER CITY STD DETAIL B-6 AND MATCH EX WIDTH. MATCH EXISTING SIDEWALK WIDTH AND CURB & GUTTER STYLE. CONFORM TO EXISTING ELEVATIONS.

PAVEMENT REPLACEMENT & REHABILITATION KEY NOTES

KEY NOTES	PVMT ZONE	STA TO STA	AREA (SF)	A.C. THICKNESS / TOT VOL. (CY)	A.B. THICKNESS	DWG OR DETAIL REFERENCE	BID ITEM / UNIT TYPE
6	7	70+00 TO 83+75	27,580	4" / 341.0	8"	DET 4 / 05-CD-10	61 / CY
			5182	1.5" / 24.0	N/A	DET 4 / 05-CD-10	62 / CY
			2221	4" / 28.0	8"	DET 4 / 05-CD-10	63 / CY
7	8	83+75 TO 94+00	13,133	4" / 163.0	8"	DET 4 / 05-CD-10	61 / CY
			3479	1.5" / 17.0	N/A	DET 4 / 05-CD-10	62 / CY
			1491	4" / 19.0	8"	DET 4 / 05-CD-10	63 / CY

DESIGN P WEBSTER
DRAWN P WEBSTER
CHECKED T LEWIS
APPROVED M FISHER

WATERWORKS ENGINEERS
2260 Douglas Blvd, Suite 105 • Roseville, CA 95661 • 916-780-2888

CITY OF MORRO BAY
WATER RECLAMATION FACILITY
LIFT STATION AND OFFSITE PIPELINES

CIVIL
PAVEMENT REPLACEMENT AND REHABILITATION PLAN
STA 70+00 TO STA 97+50

REGISTERED PROFESSIONAL ENGINEER
MICHAEL FISHER
No. C67194
CIVIL
STATE OF CALIFORNIA
05/29/2020

DATE MAY 2020
PROJECT NUMBER 17-082
DRAWING NUMBER 06-C-3
SHEET NUMBER 110

CONFORMED SET - DEC 2020

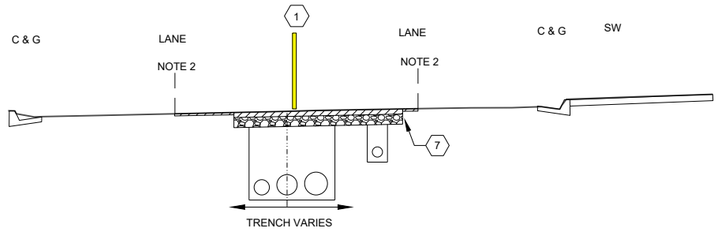

A PVMT ZONE 9
-- NTS

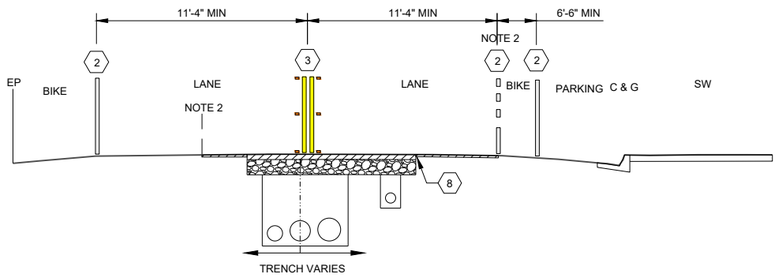

B PVMT ZONE 10
-- NTS

SHEET NOTES

1. CONTRACTOR SHALL INSTALL FINAL PAVING WITHIN THREE (3) WEEKS OF PROVIDING TEMPORARY DRIVABLE PAVEMENT.
2. SECTIONS ARE APPROXIMATE AND INTENDED TO DEPICT TYPICAL CONDITIONS. TRENCH OUTLINE IS INTENDED TO DEPICT GENERAL EXCAVATION DISTURBANCES AND NUMBER OF PIPELINES ONLY.
3. LONGITUDINAL PAVEMENT JOINTS SHALL NOT BE LOCATED UNDER THE VEHICULAR WHEEL LINES. EXTEND REPLACEMENT OR REHABILITATION PAVEMENT OVER TRENCH ZONES TO CLOSEST CONCRETE C&G EDGE, PAVEMENT EDGE TERMINATION, LANE LINE, OR CENTER OF VEHICULAR TRAVEL LANE WHEN BOUNDED BY LANE LINES. IF VEHICULAR TRAVEL LANE IS NOT DEFINED BY LANE LINES, THE CENTER OF VEHICULAR TRAVEL LANE IS ASSUMED TO EXTEND 6'-0" BEYOND THE ROADWAY CL OR EDGE OF MEDIAN STRIPING. IF VEHICULAR TRAVEL LANE IS NOT DEFINED BY LANE LINES, THE VEHICULAR TRAVEL LANE LIMIT IS ASSUMED TO EXTEND 12'-0" BEYOND THE ROADWAY CL OR EDGE OF MEDIAN STRIPING. IF TRENCH LIMITS EXTEND PAST INNER BIKE LANE LINE, THEN EXTEND TO CLOSEST CONCRETE C&G EDGE LINE OR PAVEMENT EDGE TERMINATION.

STRIPING & STENCILING KEY NOTES:

1. SOLID YELLOW CL. REPLACE WERE DAMAGED AT A MINIMUM OR TO THE EXTENS DELINEATED HEREIN.
2. BIKE LANE LIMITS PER DETAILS 39/39A CALTRANS STD PLAN A20D, "BIKE LANE ARROW" PER CALTRANS STD PLAN A24A, "BIKE LANE SYMBOL WITH PERSON" PER CALTRANS STD PLAN A24C. REPLACE WHERE DAMAGED AT A MINIMUM OR TO THE EXTENTS DELINEATED HEREIN.
3. CL PER DET 22 CALTRANS STD PLAN A20A. REPLACE WHERE DAMAGED AT A MINIMUM OR TO THE EXTENTS DELINEATED HEREIN.
4. REPLACE MESSAGE "STOP" PER CALTRANS STD DETAIL A24D AND SOLID WHITE STOP LINE TO IT'S FULL EXTENT

CONCRETE FLAT WORK, CURBS, & GUTTER REPLACEMENT KEYNOTES

5. REPLACE 20-LF CONCRETE VALLEY GUTTER PER CITY STD DET B-3.
6. REPLACE 40-LF SIDEWALK PER CITY STD DET B-5 AND CURB & GUTTER PER CITY STD DET B-1. MATCH EXISTING SIDEWALK WIDTH AND CURB & GUTTER STYLE. CONFORM TO EXISTING ELEVATIONS.

PAVEMENT REPLACEMENT & REHABILITATION KEY NOTES

KEY NOTES	PVMT ZONE	STA TO STA	AREA (SF)	A.C. THICKNESS / TOT VOL. (CY)	A.B. THICKNESS	DWG OR DETAIL REFERENCE	BID ITEM / UNIT TYPE
7	9	99+40 TO 100+35	1638	3" / 16.0	8"	DET 4 / 05-CD-10	61 / CY
			612	1.5' / 3.0	N/A	DET 4 / 05-CD-10	62 / CY
			262	3" / 3.0	8"	DET 4 / 05-CD-10	63 / CY
8	10	100+20 TO 121+25	27507	4" / 340.0	8"	DET 4 / 05-CD-10	61 / CY
			7654	1.5" / 36.0	N/A	DET 4 / 05-CD-10	62 / CY
			3280	4" / 41.0	8"	DET 4 / 05-CD-10	63 / CY

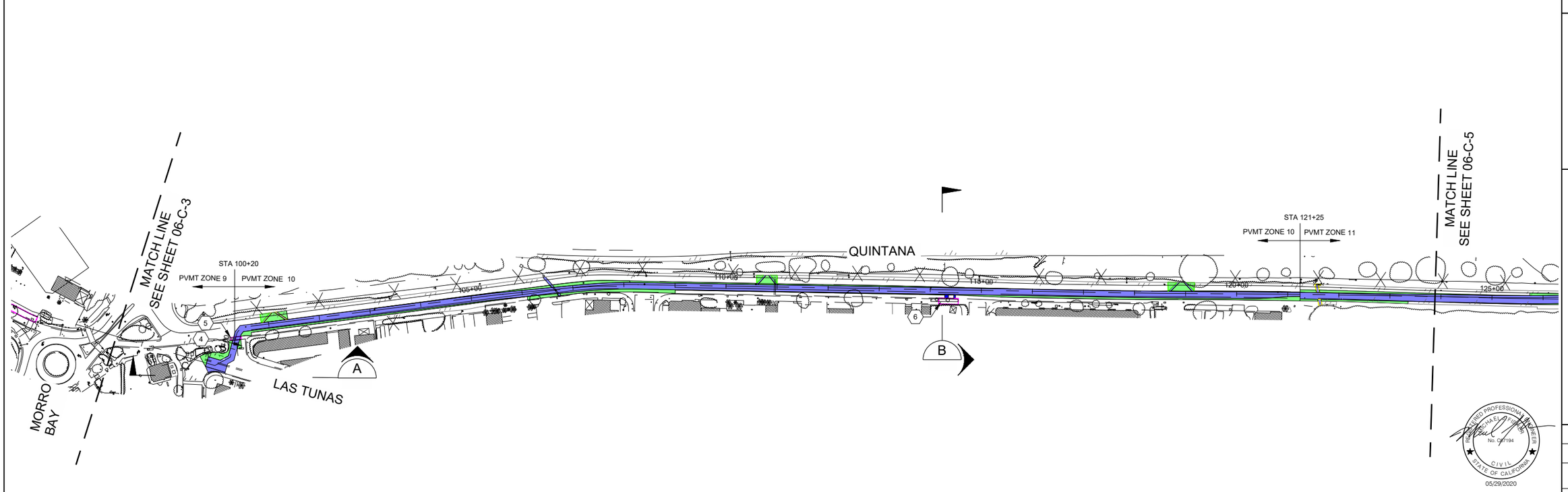

DESIGN P WEBSTER
DRAWN P WEBSTER
CHECKED T LEWIS
APPROVED M FISHER

WATERWORKS ENGINEERS
2260 Douglas Blvd, Suite 105 • Roseville, CA 95661 • 916-780-2888

CITY OF MORRO BAY
WATER RECLAMATION FACILITY
LIFT STATION AND OFFSITE PIPELINES

CIVIL
PAVEMENT REPLACEMENT AND REHABILITATION PLAN
STA 97+50 TO STA 125+00

REGISTERED PROFESSIONAL ENGINEER
RACHAEL E. PORTER
No. C67194
CIVIL
STATE OF CALIFORNIA
05/29/2020

DATE
MAY 2020
PROJECT NUMBER
17-082
DRAWING NUMBER
06-C-4
SHEET NUMBER 111

CONFORMED SET - DEC 2020

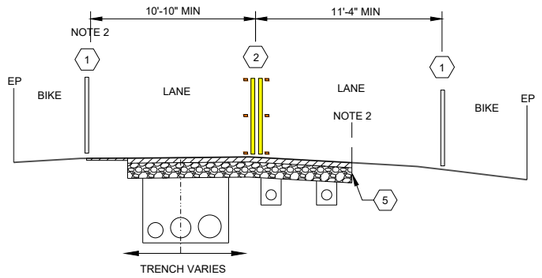

A PVMT ZONE 11
-- NTS

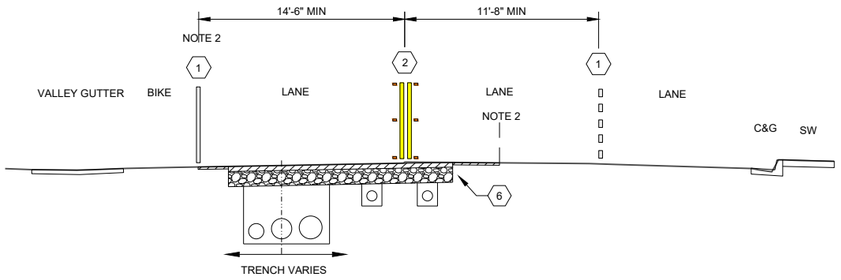

B PVMT ZONE 12
-- NTS

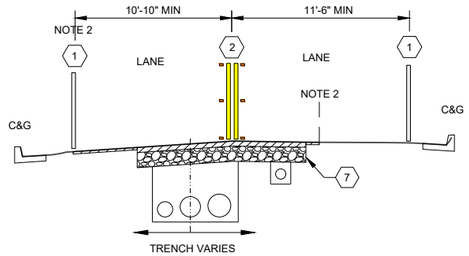

C PVMT ZONE 13
-- NTS

SHEET NOTES

1. CONTRACTOR SHALL INSTALL FINAL PAVING WITHIN THREE (3) WEEKS OF PROVIDING TEMPORARY DRIVABLE PAVEMENT.
2. SECTIONS ARE APPROXIMATE AND INTENDED TO DEPICT TYPICAL CONDITIONS. TRENCH OUTLINE IS INTENDED TO DEPICT GENERAL EXCAVATION DISTURBANCES AND NUMBER OF PIPELINES ONLY.
3. LONGITUDINAL PAVEMENT JOINTS SHALL NOT BE LOCATED UNDER THE VEHICULAR WHEEL LINES. EXTEND REPLACEMENT OR REHABILITATION PAVEMENT OVER TRENCH ZONES TO CLOSEST CONCRETE C&G EDGE, PAVEMENT EDGE TERMINATION, LANE LINE, OR CENTER OF VEHICULAR TRAVEL LANE WHEN BOUNDED BY LANE LINES. IF VEHICULAR TRAVEL LANE IS NOT DEFINED BY LANE LINES, THE CENTER OF VEHICULAR TRAVEL LANE IS ASSUMED TO EXTEND 6'-0" BEYOND THE ROADWAY CL OR EDGE OF MEDIAN STRIPING. IF VEHICULAR TRAVEL LANE IS NOT DEFINED BY LANE LINES, THE VEHICULAR TRAVEL LANE LIMIT IS ASSUMED TO EXTEND 12'-0" BEYOND THE ROADWAY CL OR EDGE OF MEDIAN STRIPING. IF TRENCH LIMITS EXTEND PAST INNER BIKE LANE LINE, THEN EXTEND TO CLOSEST CONCRETE C&G EDGE LINE OR PAVEMENT EDGE TERMINATION.

STRIPING AND STENCILING KEY NOTES:

1. BIKE LANE LIMITS PER DETAILS 39/39A CALTRANS STD PLAN A20D, "BIKE LANE ARROW" PER CALTRANS STD PLAN A24A, "BIKE LANE SYMBOL WITH PERSON" PER CALTRANS STD PLAN A24C. REPLACE WHERE DAMAGED AT A MINIMUM OR TO THE EXTENTS DELINEATED HEREIN.
2. CL PER DET 22 CALTRANS STD PLAN A20A. REPLACE WHERE DAMAGED AT A MINIMUM OR TO THE EXTENTS DELINEATED HEREIN.
3. REPLACE MESSAGE "STOP" PER CALTRANS STD DETAIL A24D AND SOLID WHITE STOP LINE TO IT'S FULL EXTENT

CONCRETE FLAT WORK, CURBS, & GUTTER REPLACEMENT KEYNOTES

4. REPLACE 60-LF CONCRETE VALLEY GUTTER PER CITY STD DET B-3.

PAVEMENT REPLACEMENT & REHABILITATION KEY NOTES

KEY NOTES	PVMT ZONE	STA TO STA	AREA (SF)	A.C. THICKNESS / TOT VOL. (CY)	A.B. THICKNESS	DWG OR DETAIL REFERENCE	BID ITEM / UNIT TYPE
5	11	125+00 TO 149+00	44,977	4"/ 556.0	8"	DET 4 / 05-CD-10	61 / CY
			8657	1.5" / 46.0	N/A	DET 4 / 05-CD-10	62 / CY
			3710	4" / 52.0	8"	DET 4 / 05-CD-10	63 / CY
6	12	149+00 TO 150+50	3472	4" / 43.0	8"	DET 4 / 05-CD-10	61 / CY
			951	1.5" / 5.0	N/A	DET 4 / 05-CD-10	62 / CY
			408	4" / 6.0	8"	DET 4 / 05-CD-10	63 / CY
7	13	150+50 TO 156+15	6426	4" / 80.0	8"	DET 4 / 05-CD-10	61 / CY
			1170	1.5" / 6.0	N/A	DET 4 / 05-CD-10	62 / CY
			502	4" / 7.0	8"	DET 4 / 05-CD-10	63 / CY
8	N/A	156+15 TO 160+63	4873	3" / 46.0	N/A	DET 1/05-CD-11	64 / CY
			4728	7" / 103.0	N/A	DET 1/05-CD-11	64 / CY

1

NORTH
100 0 100 200 FEET
HORIZSCALE 1"=100'

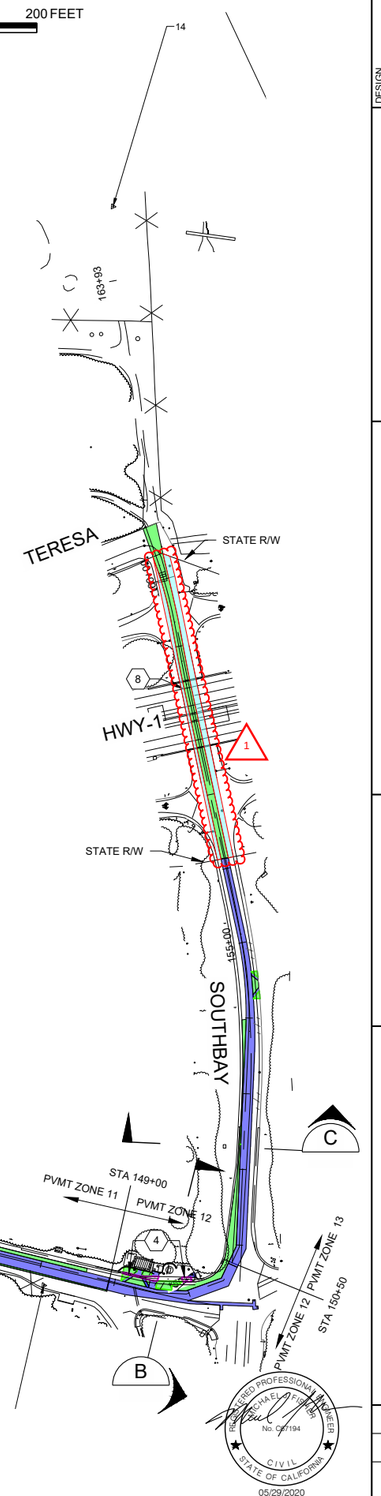

REGISTERED PROFESSIONAL ENGINEER
MICHAEL D. FISHER
No. C071194
CIVIL
STATE OF CALIFORNIA
05/29/2020

DESIGN P WEBSTER
DRAWN P WEBSTER
CHECKED T LEWIS
APPROVED M FISHER

WATERWORKS ENGINEERS
2260 Douglas Blvd, Suite 105 • Roseville, CA 95661 • 916-780-2888

CITY OF MORRO BAY
WATER RECLAMATION FACILITY
LIFT STATION AND OFFSITE PIPELINES

CIVIL
PAVEMENT REPLACEMENT AND REHABILITATION PLAN
STA 125+00 TO END

DATE MAY 2020
PROJECT NUMBER 17-082
DRAWING NUMBER 06-C-5
SHEET NUMBER 112

W:\CAD\PROJECTS\17-082 MORRO BAY PS AND PIPELINE_(S)\PROJECT FILES\DELIVERABLES\1782D-06C101.DWG

JOB NUMBER: 17-082 FILENAME: 1782D-06C101.DWG PLOT DATE: 06/2/20 PLOT TIME: 00:06:11

CONFORMED SET - DEC 2020



DEMO THE FOLLOWING ITEMS PER SPEC 02220: EX GUARDRAIL, GRATING, HANDRAIL, FENCING, HAND WASHING SINK, PLATFORM, LADDER, LIGHT POLE, ATTACHMENTS, AND PEDESTALS. CUT AND CAP DRAINS, WATERLINES, POWER AND CONDUITS TO EG. SALVAGE SAMPLING EQUIPMENT AND RETURN TO OWNER.

1 DEMOLITION PHOTO
06-CD-02 NTS

DESIGNED A LINDEMAN
DRAWN B TROTTER
CHECKED A LINDEMAN
APPROVED M FISHER

WATERWORKS ENGINEERS
2290 Douglas Blvd., Suite 105 • Roseville, CA 95661 • 916-780-2888

CITY OF MORRO BAY
WATER RECLAMATION FACILITY
LIFT STATIONS AND OFFSITE PIPELINES

CIVIL DETAILS
AIR RELIEF STRUCTURE
DEMOLITION PHOTO

REGISTERED PROFESSIONAL ENGINEER
No. 67194
CIVIL
STATE OF CALIFORNIA
05-29-2020

DATE MAY 2020
PROJECT NUMBER 17-082
DRAWING NUMBER 06-CD-01
SHEET NUMBER 113

FILENAME: 1782D-06D101.DGN PLOT DATE: 5/29/2020 2:47:52 PM

CONFORMED SET - DEC 2020

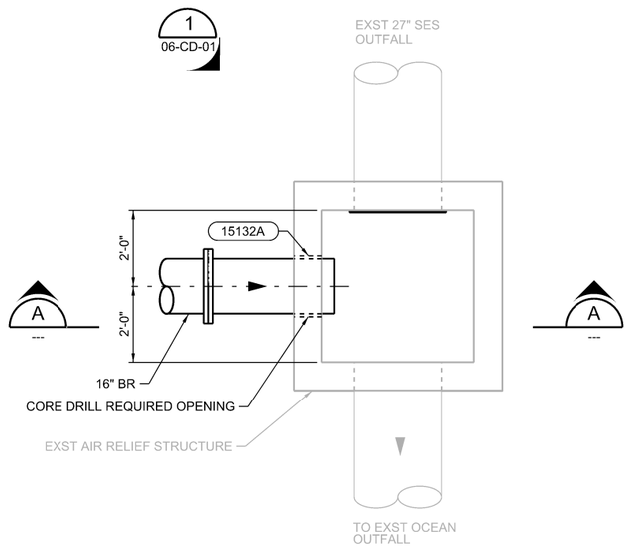

FOUNDATION PLAN
1/2" = 1'-0"

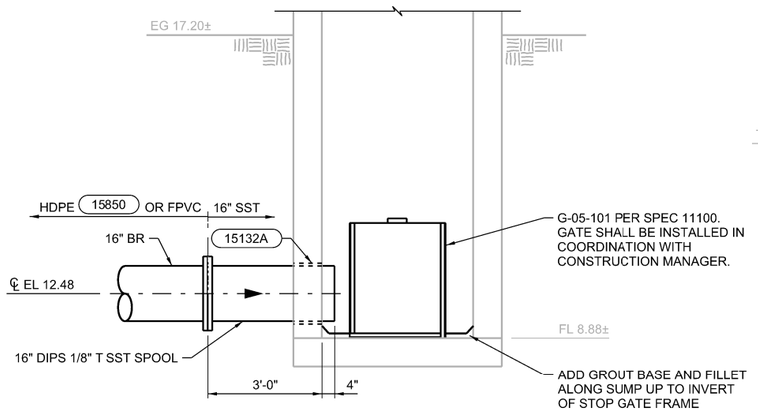

A SECTION
1/2" = 1'-0"

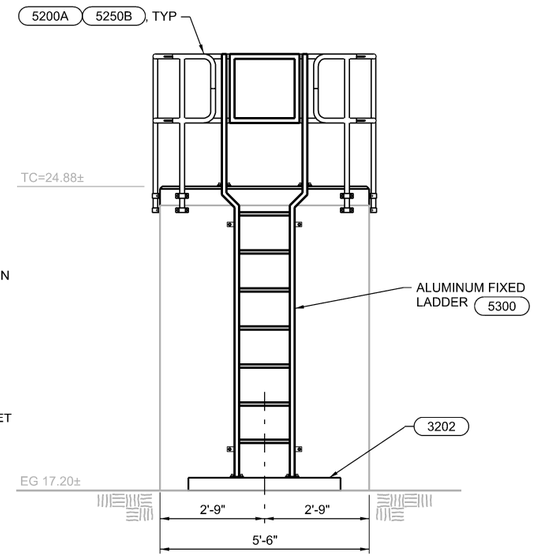

A ELEVATION
1/2" = 1'-0"

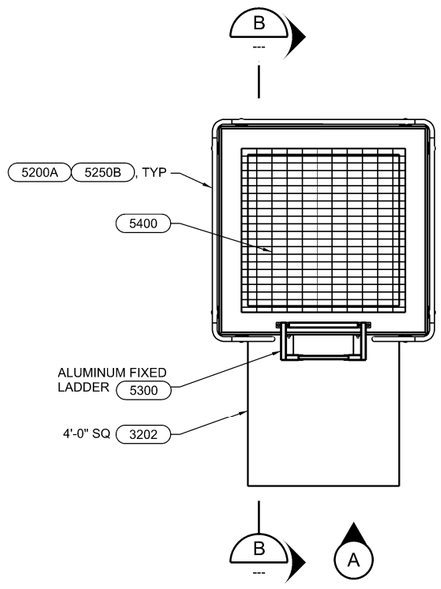

TOP PLAN
1/2" = 1'-0"

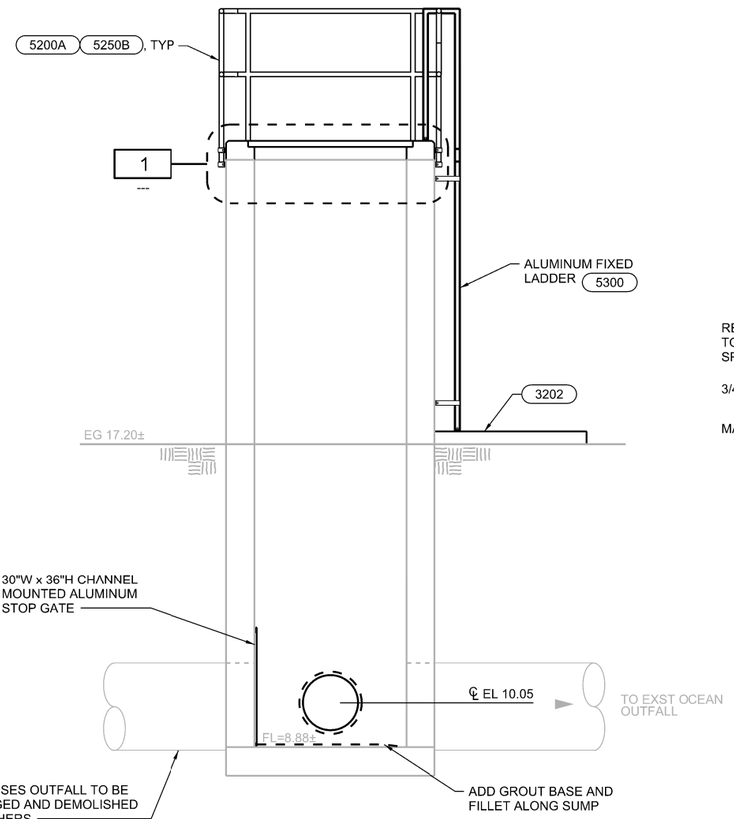

B SECTION
1/2" = 1'-0"

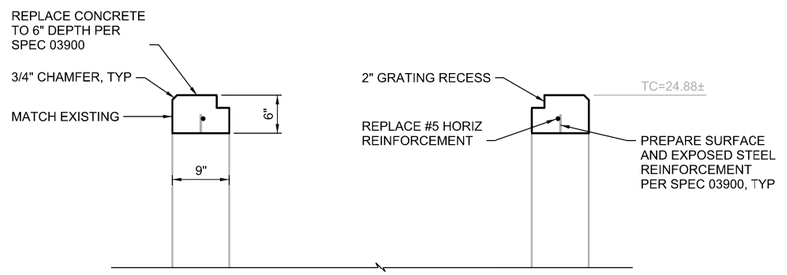

1 DETAIL
1" = 1'-0"

2 0 2 4 FEET
SCALE 1/2"=1'-0"

1 0 1 2 FEET
SCALE 1"=1'-0"

REGISTERED PROFESSIONAL ENGINEER RICHARD T. TROTTER No. C67194 CIVIL STATE OF CALIFORNIA
05-29-2020

DESIGNED T LEWIS
DRAWN B TROTTER
CHECKED T LEWIS
APPROVED M FISHER

WATERWORKS ENGINEERS
2290 Douglas Blvd., Suite 105 • Roseville, CA 95661 • 916-780-2888

CITY OF MORRO BAY
WATER RECLAMATION FACILITY
LIFT STATIONS AND OFFSITE PIPELINES

CIVIL DETAILS
AIR RELIEF STRUCTURE REHABILITATION PLANS

DATE MAY 2020
PROJECT NUMBER 17-082
DRAWING NUMBER 06-CD-02
SHEET NUMBER 114

FILENAME: 1782D-6M101.DGN PLOT DATE: 6/2/2020 7:29:39 AM

CONFORMED SET - DEC 2020

1

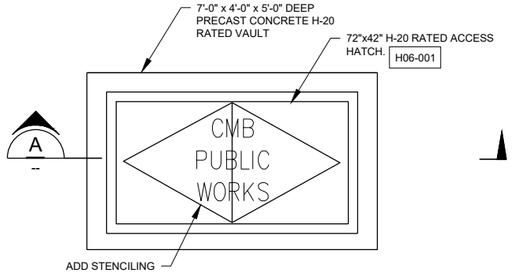

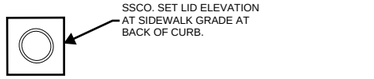

TOP PLAN
1/2"=1'-0"

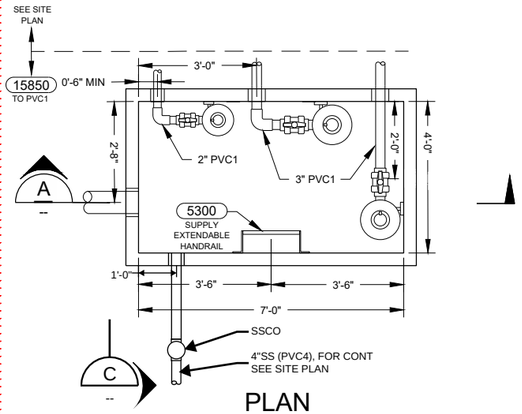

PLAN
1/2"=1'-0"

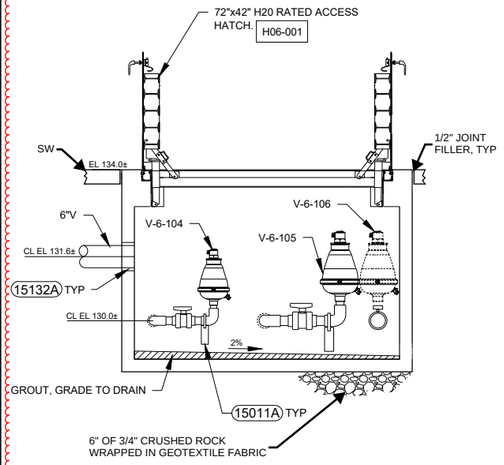

B SECTION
1/2"=1'-0"

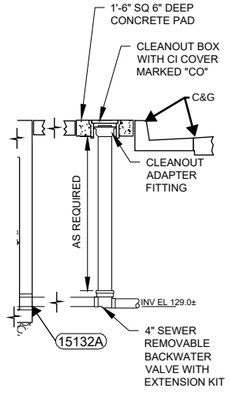

C SECTION
1/2"=1'-0"

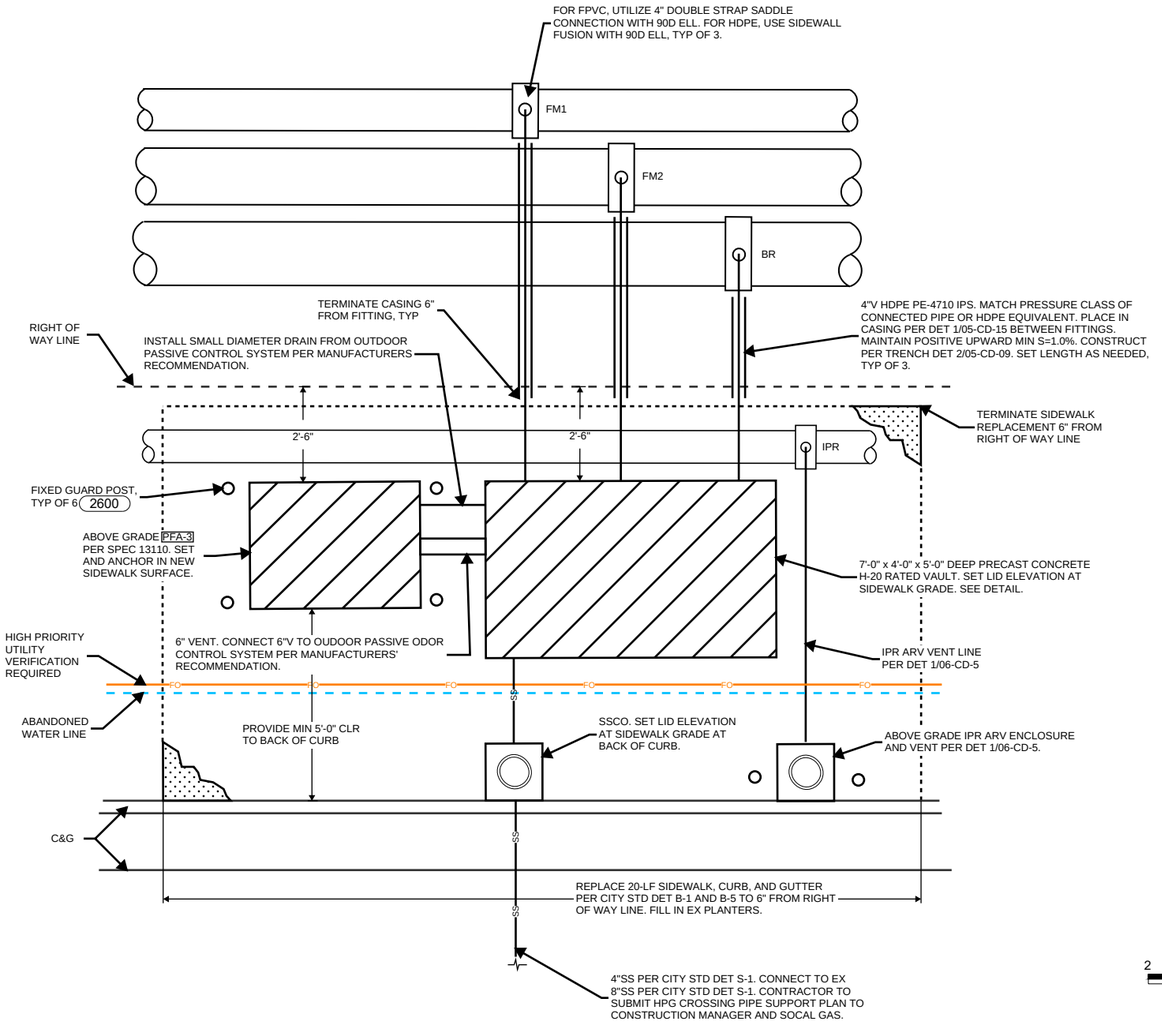

PLAN
1/2"=1'-0"

2 0 2 4 FEET
SCALE 1/2"=1'-0"

REGISTERED PROFESSIONAL ENGINEER RACHAEL E. FISHER No. C67194 CIVIL STATE OF CALIFORNIA
05/29/2020

DESIGN T. LEWIS
DRAWN T. LEWIS
CHECKED M. FISHER
APPROVED M. FISHER

WATERWORKS ENGINEERS
2260 Douglas Blvd, Suite 105 • Roseville, CA 95661 • 916-790-2988

CITY OF MORRO BAY
WATER RECLAMATION FACILITY
LIFT STATION AND OFFSITE PIPELINES

CIVIL DETAIL
ROUNDABOUT ARV VAULT AND ODOR CONTROL PLAN

DATE MAY 2020
PROJECT NUMBER 17-082
DRAWING NUMBER 06-CD-03
SHEET NUMBER 115

L:\CAD\PROJECTS\17-082 MORRO BAY PS AND PIPELINE_(S)\PROJECT FILES\DELIVERABLES\1782D-06CD101.DWG

CONFORMED SET - DEC 2020

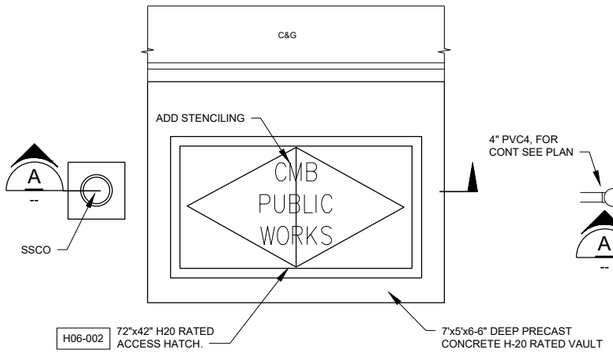

TOP PLAN
1/2"=1'-0"

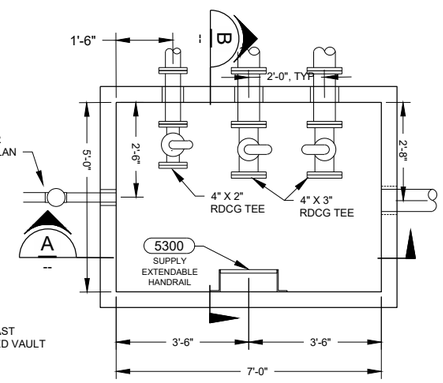

PLAN
1/2"=1'-0"

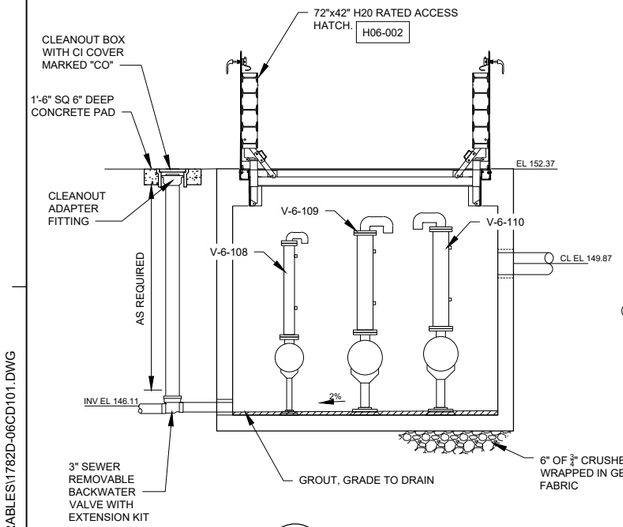

A SECTION
1/2"=1'-0"

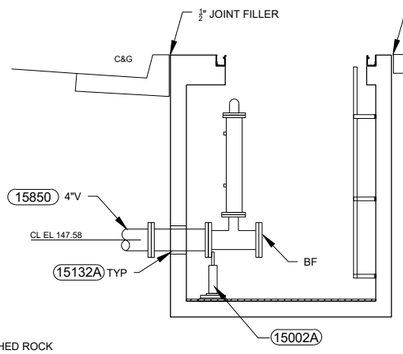

B SECTION
1/2"=1'-0"

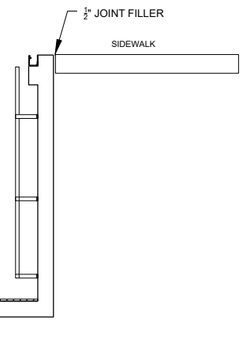

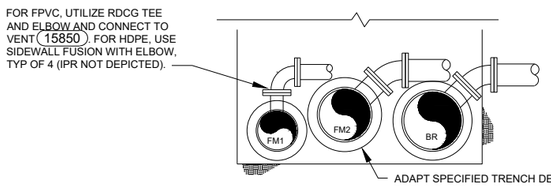

C SECTION
1/2"=1'-0"

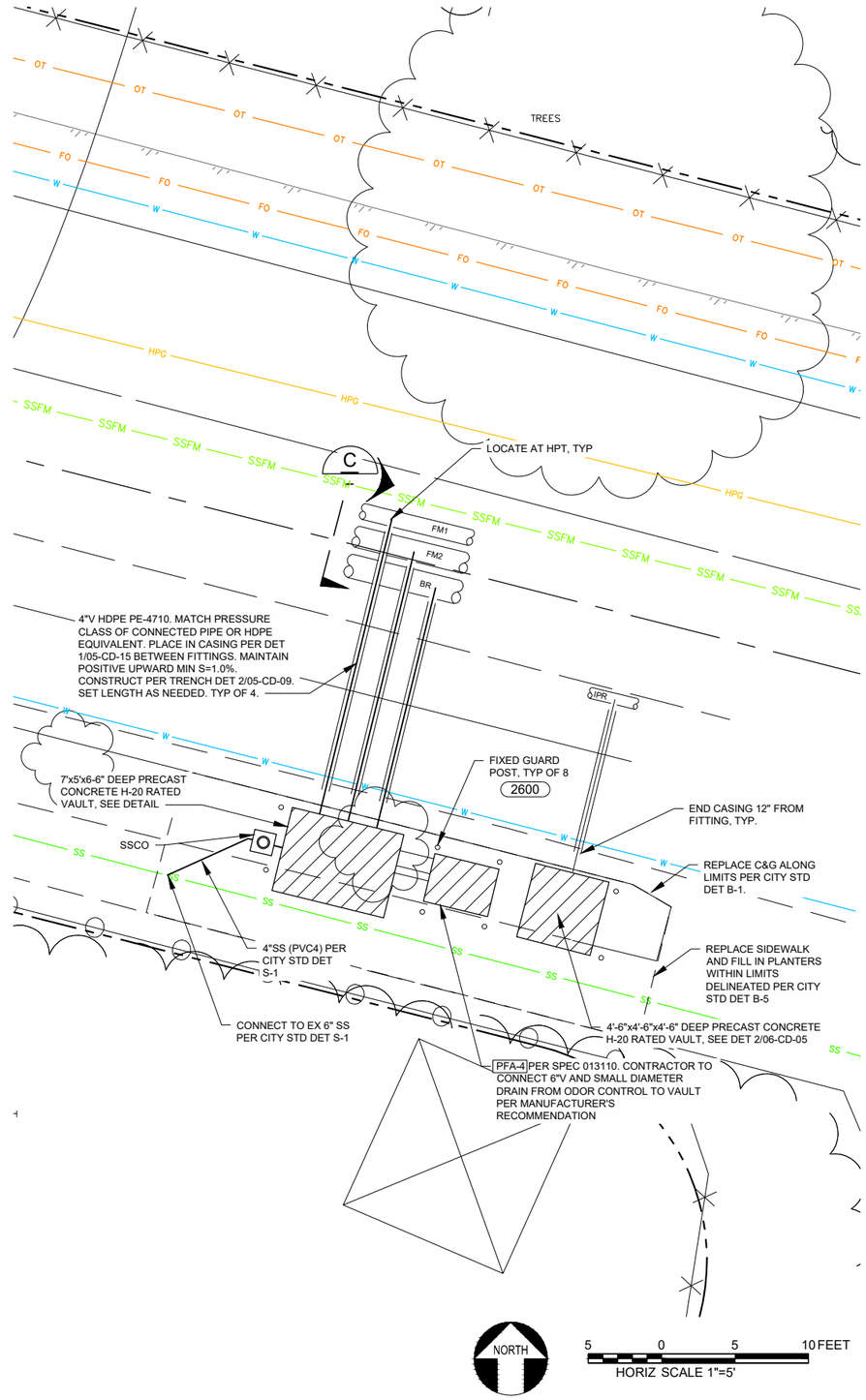

NORTH
2 0 2 4 FEET
SCALE 1/2"=1'-0"

NORTH
5 0 5 10 FEET
HORIZ SCALE 1"=5'

REGISTERED PROFESSIONAL ENGINEER
RACHEL E. FISHER
No. C67194
CIVIL
STATE OF CALIFORNIA
05/29/2020

DESIGN	T. LEWIS
DRAWN	T. LEWIS
CHECKED	M. FISHER
APPROVED	M. FISHER

WATERWORKS ENGINEERS
2260 Douglas Blvd, Suite 105 • Roseville, CA 95661 • 916-780-2888

CITY OF MORRO BAY
WATER RECLAMATION FACILITY
LIFT STATION AND OFFSITE
PIPELINES

CIVIL DETAIL

QUINTANA HIGH POINT CARV VAULT AND ODOR CONTROL PLAN

DATE	MAY 2020
PROJECT NUMBER	17-082
DRAWING NUMBER	06-CD-04
SHEET NUMBER	116

L:\CAD\PROJECTS\17-082 MORRO BAY PS AND PIPELINE_(S)\PROJECT FILES\DELIVERABLES\1782D-06CD101.DWG

JOB NUMBER: 17-082 FILENAME: 1782D-06CD101.DWG PLOT DATE: 05/28/20 PLOT TIME: 14:57:59

CONFORMED SET - DEC 2020

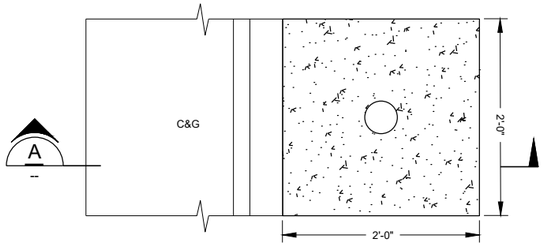

TOP PLAN
NTS

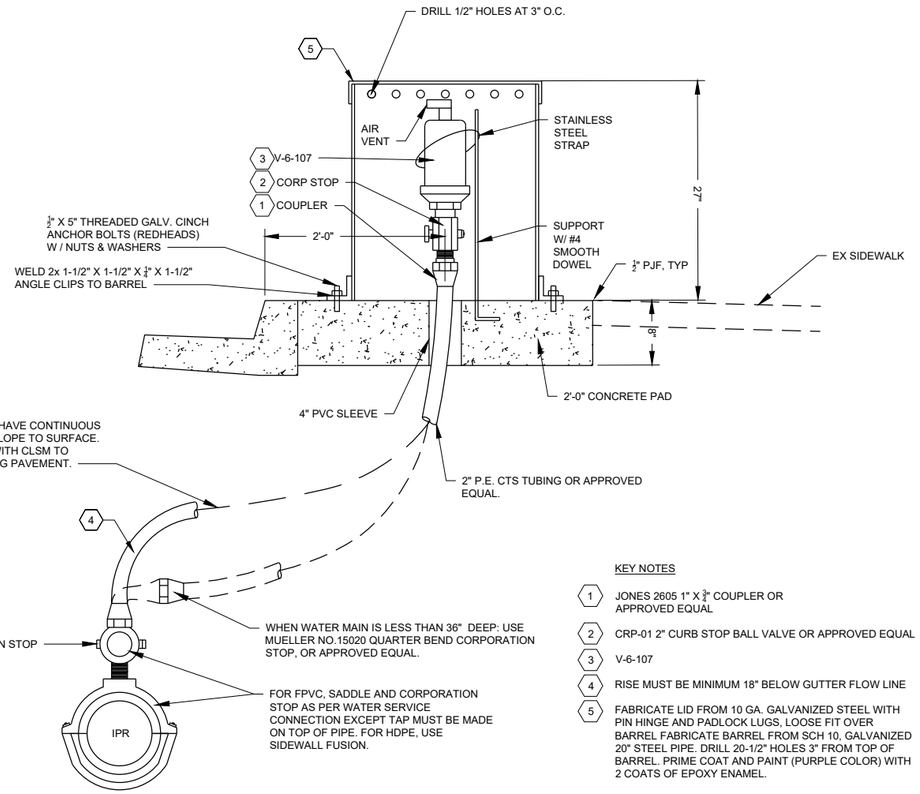

KEY NOTES

1. JONES 2605 1" X ¾" COUPLER OR APPROVED EQUAL
2. CRP-01 2" CURB STOP BALL VALVE OR APPROVED EQUAL
3. V-6-107
4. RISE MUST BE MINIMUM 18" BELOW GUTTER FLOW LINE
5. FABRICATE LID FROM 10 GA. GALVANIZED STEEL WITH PIN HINGE AND PADLOCK LUGS, LOOSE FIT OVER BARREL FABRICATE BARREL FROM SCH 10, GALVANIZED 20" STEEL PIPE. DRILL 20-1/2" HOLES 3" FROM TOP OF BARREL. PRIME COAT AND PAINT (PURPLE COLOR) WITH 2 COATS OF EPOXY ENAMEL.

SECTION A
NTS

1 ABOVE GRADE IPR ARV
05-PP-22 NTS



2 0 2 4 FEET
SCALE 1/2"=1'-0"

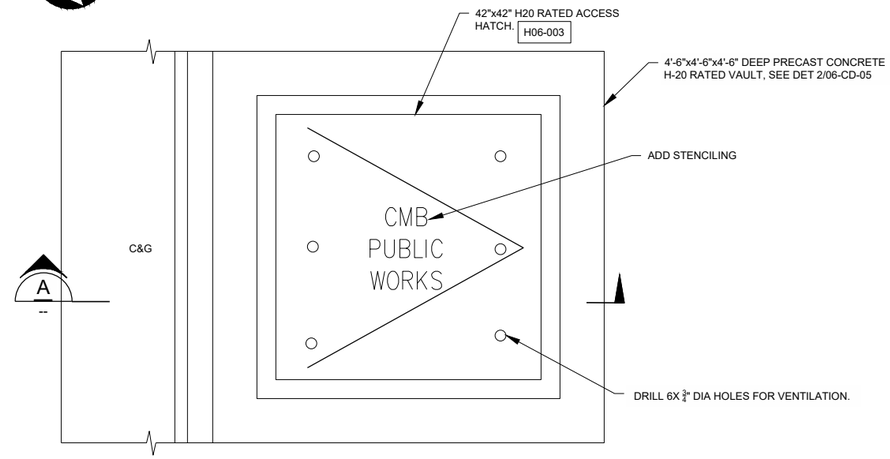

TOP PLAN
1/2"=1'-0"

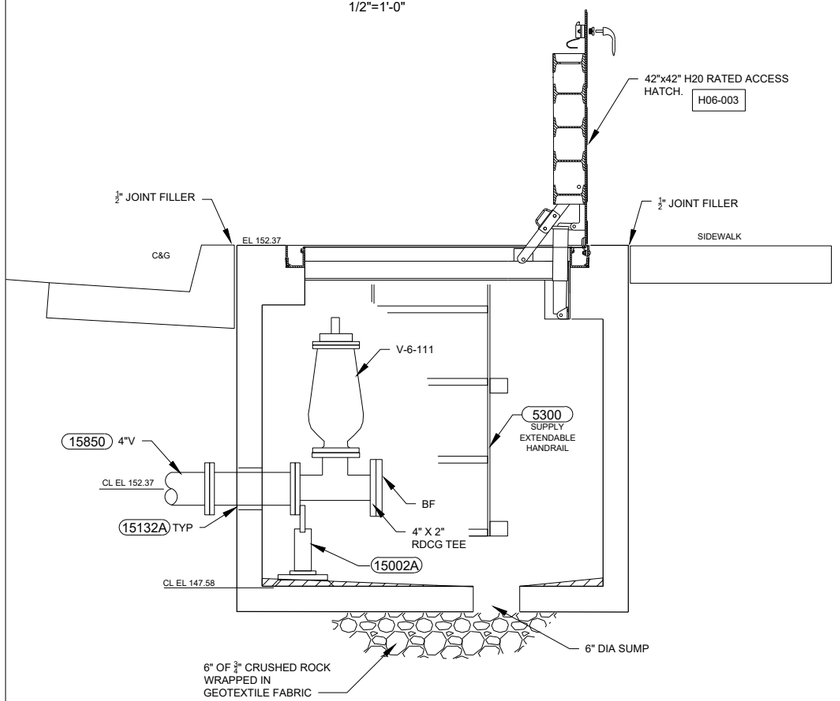

SECTION A
1/2"=1'-0"

2 IPR CARV
06-CD-04 1'=1'-0"

REGISTERED PROFESSIONAL ENGINEER
RICHARD L. FISHER
No. C67194
CIVIL
STATE OF CALIFORNIA
05/29/2020

DESIGN	T. LEWIS
DRAWN	T. LEWIS
CHECKED	M. FISHER
APPROVED	M. FISHER

WATERWORKS ENGINEERS
2260 Douglas Blvd, Suite 105 • Roseville, CA 95661 • 916-790-2988

CITY OF MORRO BAY
WATER RECLAMATION FACILITY
LIFT STATION AND OFFSITE PIPELINES

CIVIL DETAIL

IPR ARV & CARV DETAILS

DATE	MAY 2020
PROJECT NUMBER	17-082
DRAWING NUMBER	06-CD-05
SHEET NUMBER	117

L:\CAD\PROJECTS\17-082 MORRO BAY PS AND PIPELINE_(S)\PROJECT FILES\DELIVERABLES\1782D-06CD101.DWG

JOB NUMBER: 17-082 FILENAME: 1782D-06CD101.DWG PLOT DATE: 05/28/20 PLOT TIME: 14:59:26

CONFORMED SET - DEC 2020

* = FIELD VERIFY WALL EXTENTS PRIOR TO DEMOLITION AND CONSTRUCTION

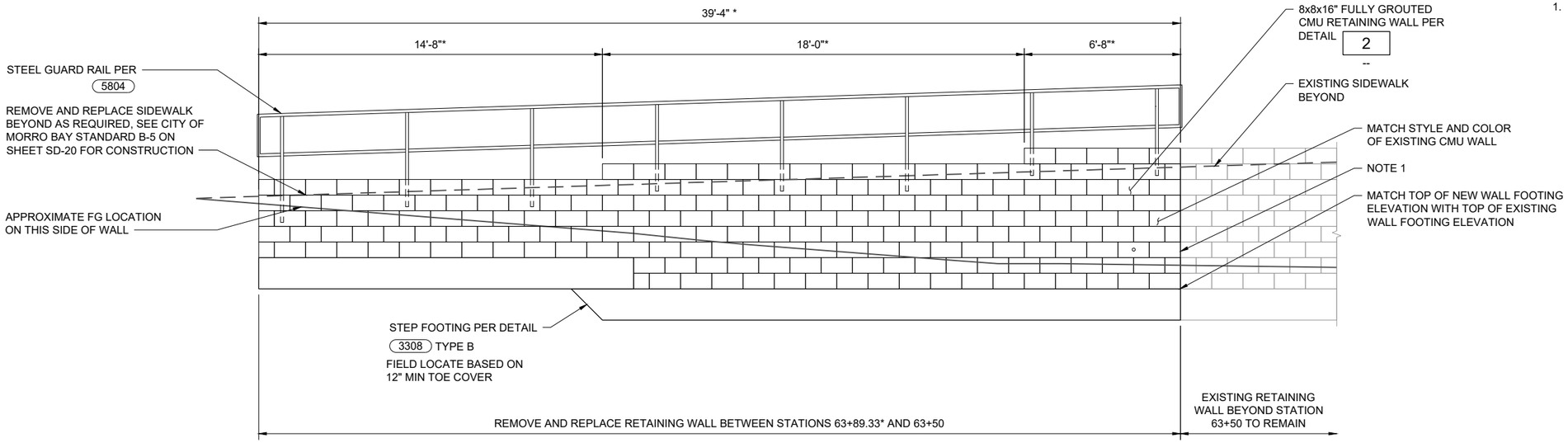

1 WALL ELEVATION
05-PP-14 3/8" = 1'-0"

NOTES:

1. DEMO EXISTING RETAINING WALL AND FOOTING AT NEAREST HEAD JOINT LOCATION. PROVIDE CLEAN AND SMOOTH COLD JOINT BETWEEN NEW AND EXISTING CONSTRUCTION.

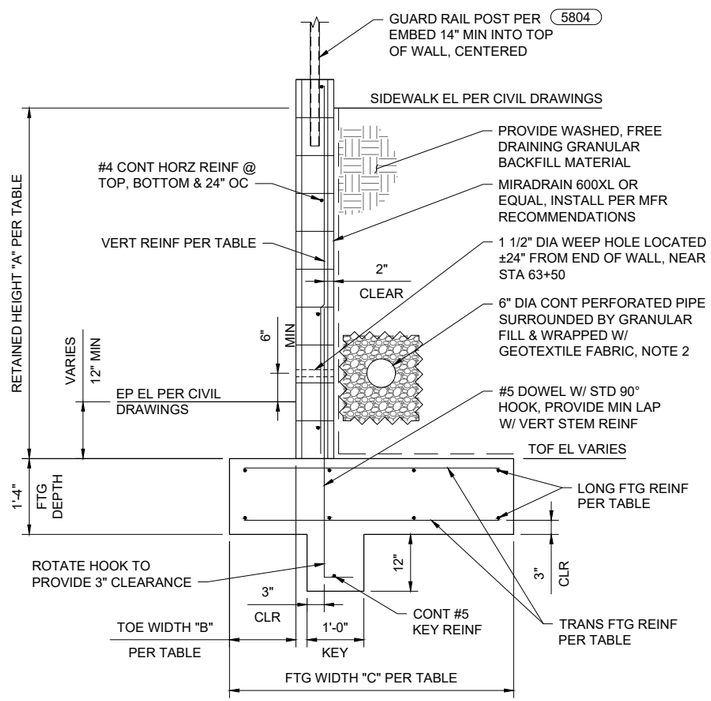

2 MAIN ST RETAINING WALL DETAIL
-- 3/4" = 1'-0"

RETAINING WALL NOTES:

1. PROVIDE PENETRATION THRU MIRADRAIN FABRIC.

2. PROVIDE 12" MIN WIDTH x 18" HIGH OF GRANULAR FILL W/ 6" MIN COVER ABOVE PERFORATED PIPE.

3. PIPE AND DRAIN NOT REQUIRED FOR RETAINED HEIGHTS LESS THAN 2'

RETAINING WALL TABLE

RETAINED HEIGHT "A"	TOE WIDTH "B"	FOOTING WIDTH "C"	KEY DEPTH "D"	VERT WALL REINF	TRANS FTG REINF[1]	LONG FTG REINF[1,2]
0' < A < 2'-0"	6"	2'-0"	1'-0"	#5 @ 24" OC	#4 @ 12" OC	(2) #4 CONT
2'-0' < A < 4'-0"	1'-0"	3'-0"	1'-0"	#5 @ 24" OC	#4 @ 12" OC	(3) #4 CONT
4'-0' < A < 6'-0"	1'-0"	4'-3"	1'-0"	#5 @ 16" OC	#5 @ 16" OC	(4) #4 CONT

NOTES: 1) TRANS AND LONG REINF SHOWN IS TYPICAL FOR TOP & BOT MATS
2) EQUALLY SPACE CONT LONG REINF ACROSS FTG WIDTH

DESIGN A LINDEMAN
DRAWN L CHAPMAN
CHECKED M FISHER
APPROVED M FISHER

WATERWORKS ENGINEERS
2260 Douglas Blvd, Suite 105 • Roseville, CA 95661 • 916-780-2888

CITY OF MORRO BAY
WATER RECLAMATION FACILITY
LIFT STATION AND OFFSITE PIPELINES

CIVIL DETAILS
MAIN STREET
RETAINING WALL DETAIL

REGISTERED PROFESSIONAL ENGINEER MICHAEL P. FISHER No. C67194 CIVIL STATE OF CALIFORNIA

DATE MAY 2020
PROJECT NUMBER 17-082
DRAWING NUMBER 06-CD-06
SHEET NUMBER 118

L:\CAD\PROJECTS\17-082 MORRO BAY PS AND PIPELINE_(S)\PROJECT FILES\DELIVERABLES\1782D-06CD6.DWG

JOB NUMBER: 14-010 FILENAME: 1782D-06CD6.DWG PLOT DATE: 02-Jun-20 PLOT TIME: 13:11:20

CONFORMED SET - DEC 2020

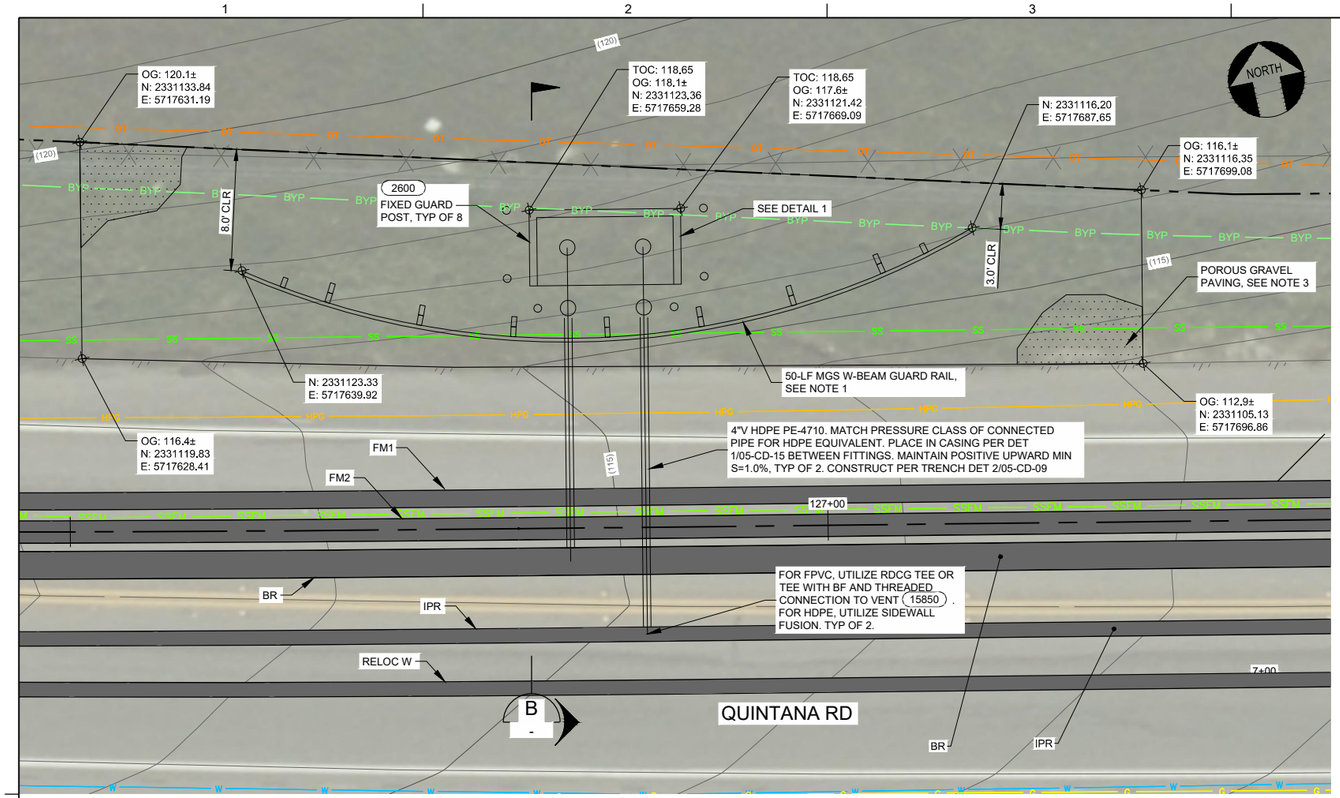

PLAN
1" = 5'-0"

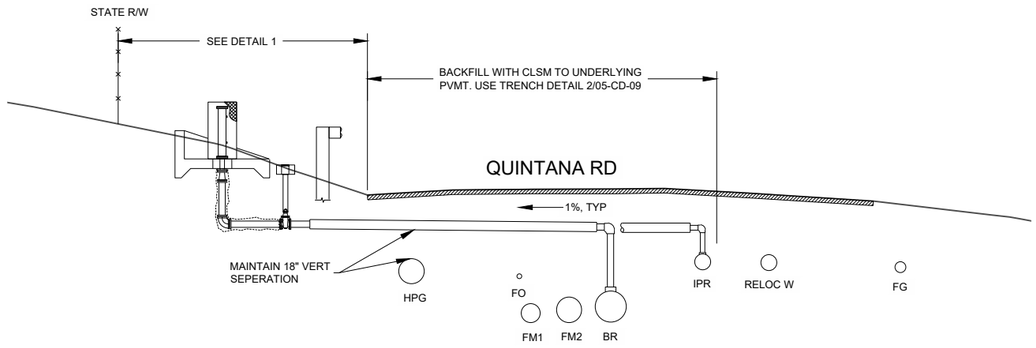

A SECTION
- NTS

NOTES:
1. MIDWEST GUARDRAIL SYSTEM (MGS) STANDARD RAILING PER CALTRANS STD PLAN A77L1. RAIL MATERIAL SHALL BE 12-GAUGE ZINC-COATED CORRUGATED STEEL. INCORPORATE FLARED END TREATMENT SYSTEM ON EITHER END. ADD HIGH VISIBILITY STRIPING ON FLARED ENDS. MANUFACTURER: TRINITY HIGHWAY SRT-350 8-POST PARABOLIC FLARE, OR APPROVED EQUAL.
2. ABOVE GROUND WELDED STEEL ARV ENCLOSURE. DOOR AND ENCLOSURE HOOD SHALL BE ABLE TO INDEPENDENTLY SWING AWAY AND PROVIDE COMPLETE ACCESS TO UNIT. DOOR MATERIAL SHALL BE NO.13 BY 1/2" METAL SCREEN. PROVIDE RECESSED LOCK LOCATION AND LIFTING LUG. 304 SST HARDWARE, HINGES, AND ANCHOR BOLTS. 12-15 MIL CORROSION PROTECTION OF 2-3MIL ZINC RICH EPOXY PRIMER COAT, 5-6 MILS THICK OF RUST-INHIBITIVE EPOXY 2ND PRIMER COAT, 5-6 MIL THICK HIGH-BUILD POLYURETHANE ENAMEL 3RD TOP COAT. COLOR SHALL BE GREEN. PLACER WATERWORKS SJARV-2M OR EQUAL.
3. APOROUS GRAVEL PAVING SHALL BE AN UNDERLYING H-20 RATED PLASTIC GRID SYSTEM WITH BACKING FABRIC AND TOPPED WITH 1/2" CRUSHED ROCK. PLACE 4" CL2 AB AT 90% RELATIVE COMPACTION UNDERNEATH BACKING FABRIC. INVISIBLE STRUCTURES GRAVELPAVE2, NDS EZ-ROLL GRAVEL PAVER, OR EQUAL

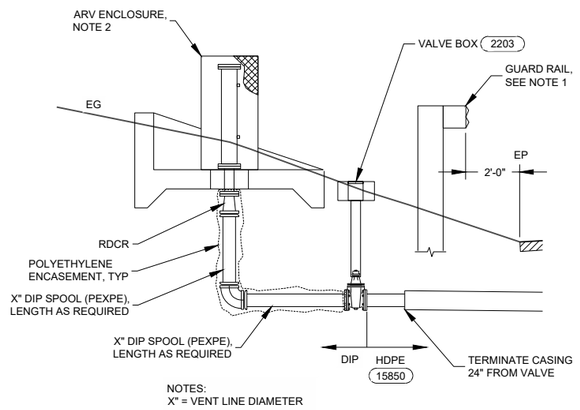

1 UPPER QUIATANA BR/IPR CARV
-- NTS

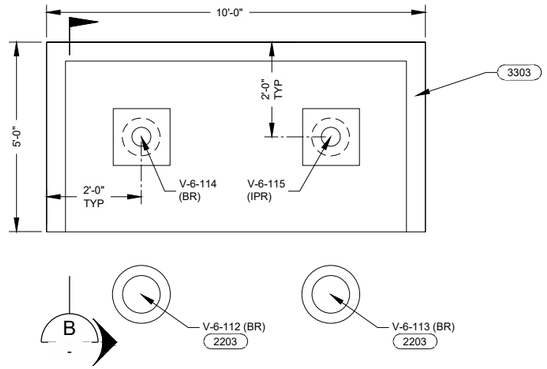

TOP PLAN
NTS

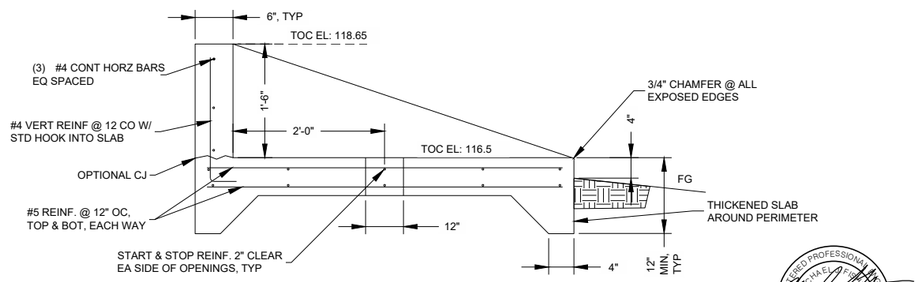

B SECTION
- NTS

REGISTERED PROFESSIONAL ENGINEER
TIMOTHY HALEY FISHER
No. C61194
CIVIL
STATE OF CALIFORNIA
05/29/2020

DESIGN	T LEWIS
DRAWN	M KARBAKHSH
CHECKED	T LEWIS
APPROVED	M FISHER

WATERWORKS ENGINEERS
2260 Douglas Blvd, Suite 105 • Roseville, CA 95661 • 916-780-2888

CITY OF MORRO BAY
WATER RECLAMATION FACILITY
LIFT STATION AND OFFSITE PIPELINES

CIVIL DETAILS
BRINE AND IPR QUINTANA CARV SITE

DATE	MAY 2020
PROJECT NUMBER	17-082
DRAWING NUMBER	05-CD-07
SHEET NUMBER	119

CONFORMED SET - DEC 2020

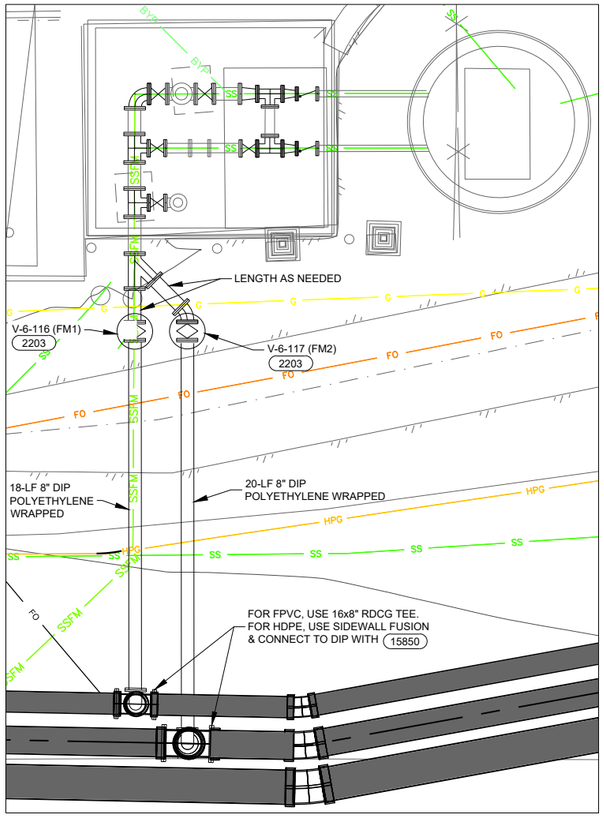

NOTES:
1. UTILIZE PRESSURE PIPE TRENCH DETAIL 2/05-CD-09

1 LS-3 CONNECTION
05-PP-36 1" = 4'

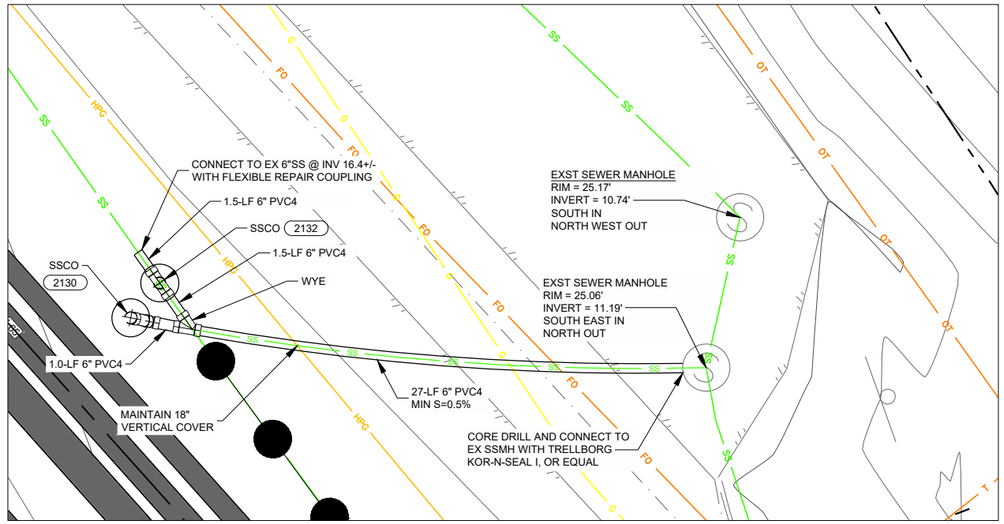

2 6"SS DIVERSION
05-PP-36 1" = 4'

NOTES:
1. UTILIZE PRESSURE PIPE TRENCH DETAIL 2/05-CD-09

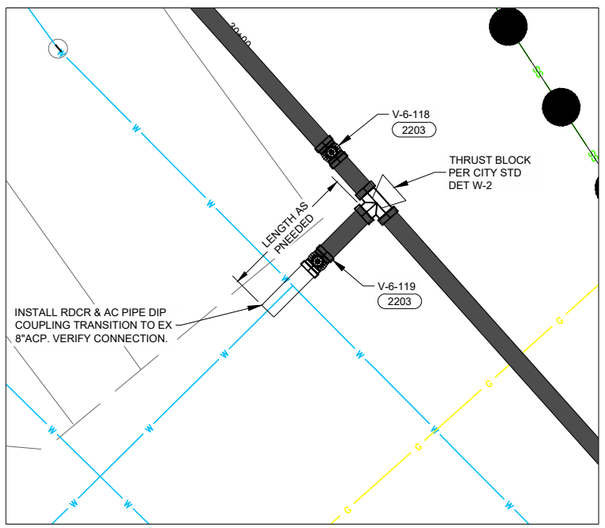

NOTES:
1. UTILIZE PRESSURE PIPE TRENCH DETAIL 2/05-CD-09

3 8"W ACP CONNECTION
05-PP-36 1" = 4'

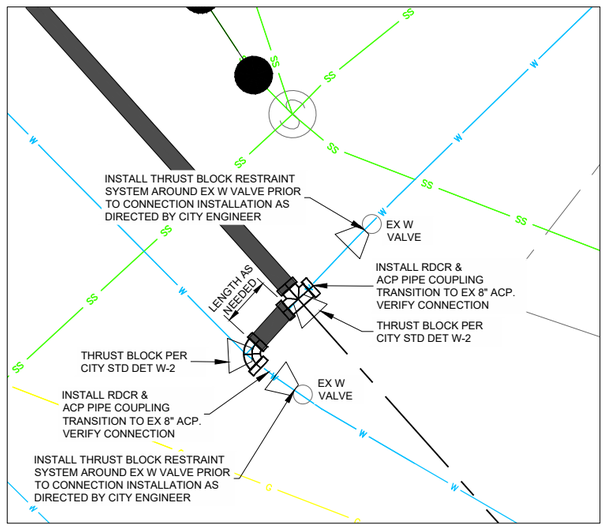

NOTES:
1. UTILIZE PRESSURE PIPE TRENCH DETAIL 2/05-CD-09

4 8"W ACP CONNECTION
05-PP-36 1" = 4'

4 0 4 8 FEET
HORIZ SCALE 1"=4'

REGISTERED PROFESSIONAL ENGINEER
MICHAEL A. FISHER
No. C61194
CIVIL
STATE OF CALIFORNIA
05/29/2020

DESIGN	P WEBSTER
DRAWN	P WEBSTER
CHECKED	T LEWIS
APPROVED	M FISHER

WATERWORKS ENGINEERS
2260 Douglas Blvd, Suite 105 • Roseville, CA 95661 • 916-780-2888

CITY OF MORRO BAY
WATER RECLAMATION FACILITY
LIFT STATION AND OFFSITE PIPELINES

CIVIL DETAILS
QUINTANA & SOUTH BAY BLVD
CONNECTION DETAILS

DATE	MAY 2020
PROJECT NUMBER	17-082
DRAWING NUMBER	06-CD-08
SHEET NUMBER	120

JOB NUMBER: 17-082 FILENAME: 1782D-06CD8.DWG PLOT DATE: 05/28/20 PLOT TIME: 15:34:52

L:\CAD\PROJECTS\17-082 MORRO BAY PS AND PIPELINE_(S)\PROJECT FILES\DELIVERABLES\1782D-06CD8.DWG

CONFORMED SET - DEC 2020

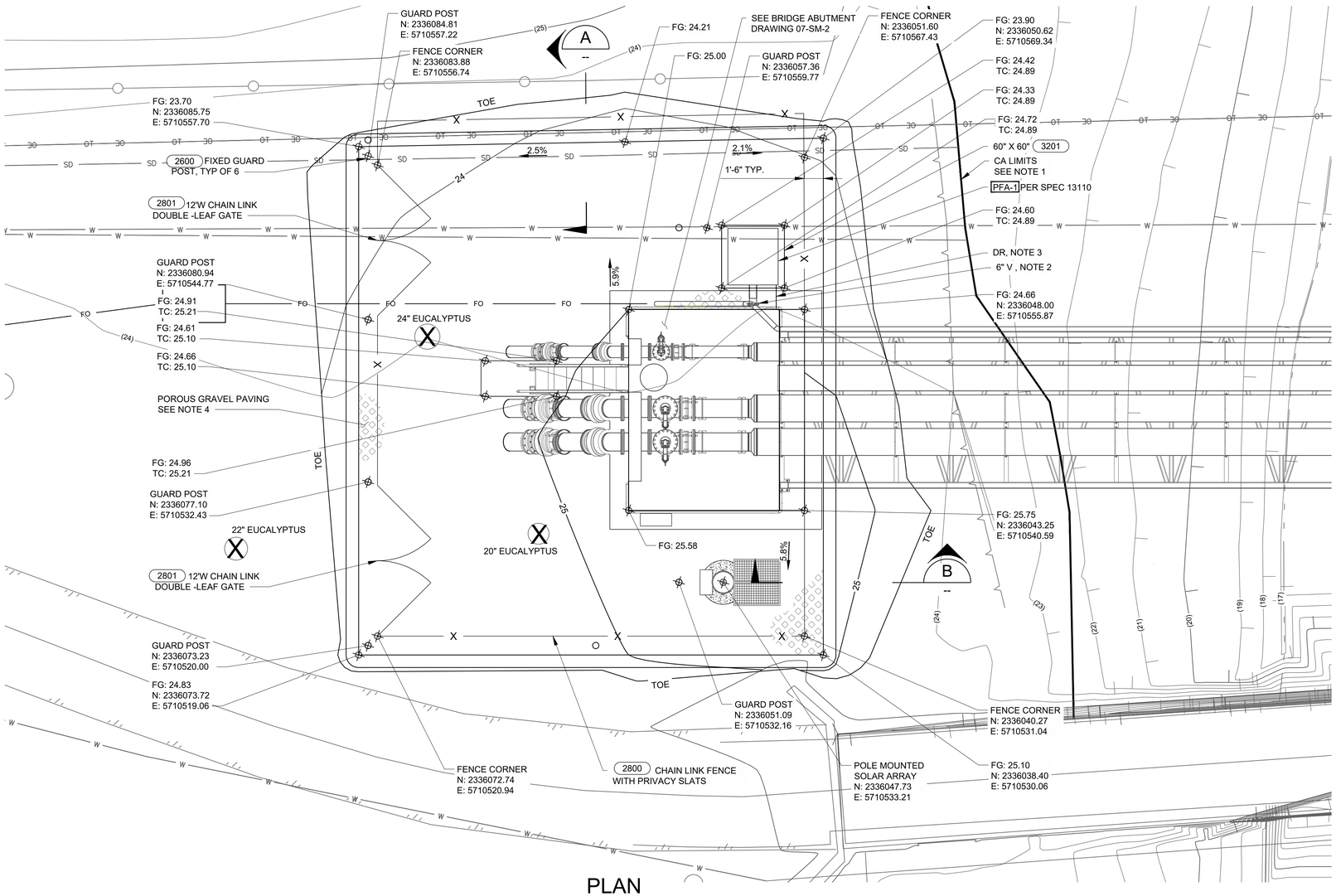

PLAN
1"=5'

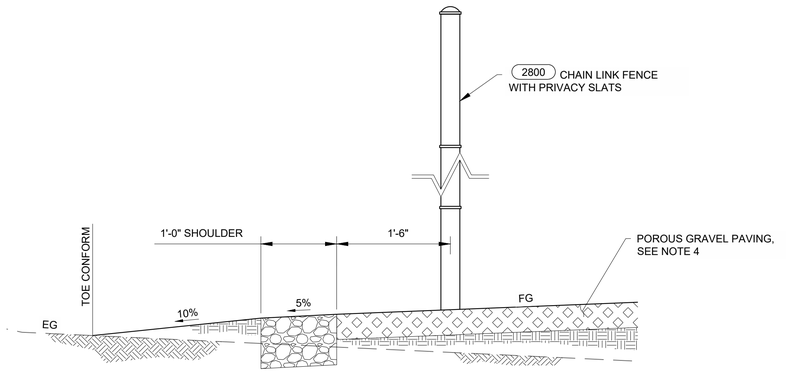

A SECTION
-- 1"= 1'

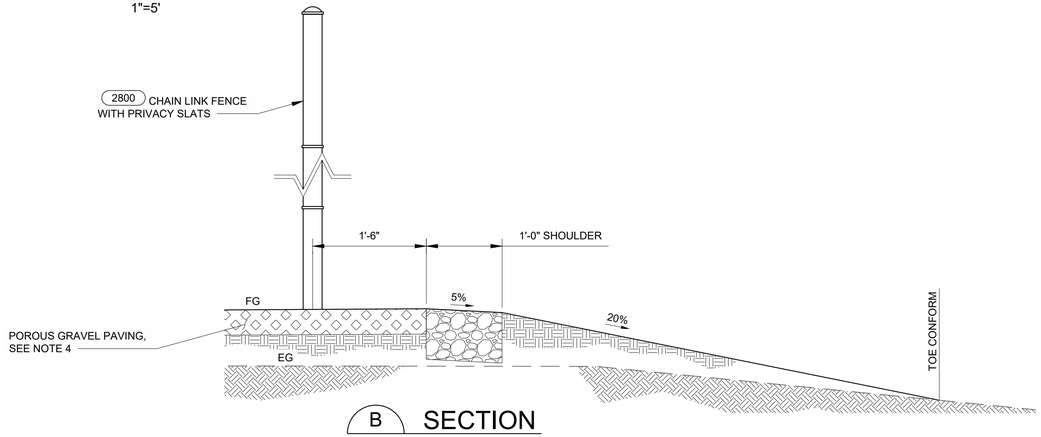

B SECTION
-- 1"= 1'

NOTES:

1. CONSTRUCTION ACTIVITY (CA) LIMITS OFFSET 3' FROM EDGE OF WETLAND BOUNDARY. GROUND DISTURBING ACTIVITIES SHALL NOT EXTEND PAST CA LIMITS. SWPPP BMPS SHALL BE INSTALLED PER APPROVED SWPPP PLAN AT A MINIMUM ALONG CA LIMITS.
2. CONTRACTOR TO CONNECT 6"V (FL) TO OUTDOOR PASSIVE ODOR CONTROL SYSTEM PER MANUFACTURER'S RECOMMENDATION.
3. CONTRACTOR TO INSTALL SMALL DIAMETER DRAIN FROM OUTDOOR PASSIVE ODOR CONTROL SYSTEM PER MANUFACTURER'S RECOMMENDATION.
4. POROUS GRAVEL PAVING SHALL BE AN UNDERLYING H-20 RATED PLASTIC GRID SYSTEM WITH BACKING FABRIC AND TOPPED WITH 1/2" CRUSHED ROCK. PLACE 4" CL2 AB AT 90% RELATIVE COMPACTION UNDERNEATH BACKING FABRIC. INVISIBLE STRUCTURES GRAVELPAVE2, NDS EZ-ROLL GRAVEL PAVER, OR EQUAL.

LEGEND:

X DEMOLISH EXISTING TREES PER 05-PP-06 AND 05-PP-07

1 0 1 2 FEET
SCALE 1"=1'

5 0 5 10 FEET
SCALE 1"=5'

REGISTERED PROFESSIONAL ENGINEER
MICHAEL D. FISHER
No. C057194
CIVIL
STATE OF CALIFORNIA
05/29/2020

DESIGN P. WEBSTER
DRAWN P. WEBSTER
CHECKED T. LEWIS
APPROVED M FISHER

WATERWORKS ENGINEERS
2260 Douglas Blvd, Suite 105 • Roseville, CA 95661 • 916-780-2888

CITY OF MORRO BAY
WATER RECLAMATION FACILITY
LIFT STATION AND OFFSITE PIPELINES

CIVIL
NORTHERN BRIDGE ABUTMENT GRADING PLAN

DATE MAY 2020
PROJECT NUMBER 17-082
DRAWING NUMBER 07-C-1
SHEET NUMBER 121

CONFORMED SET - DEC 2020

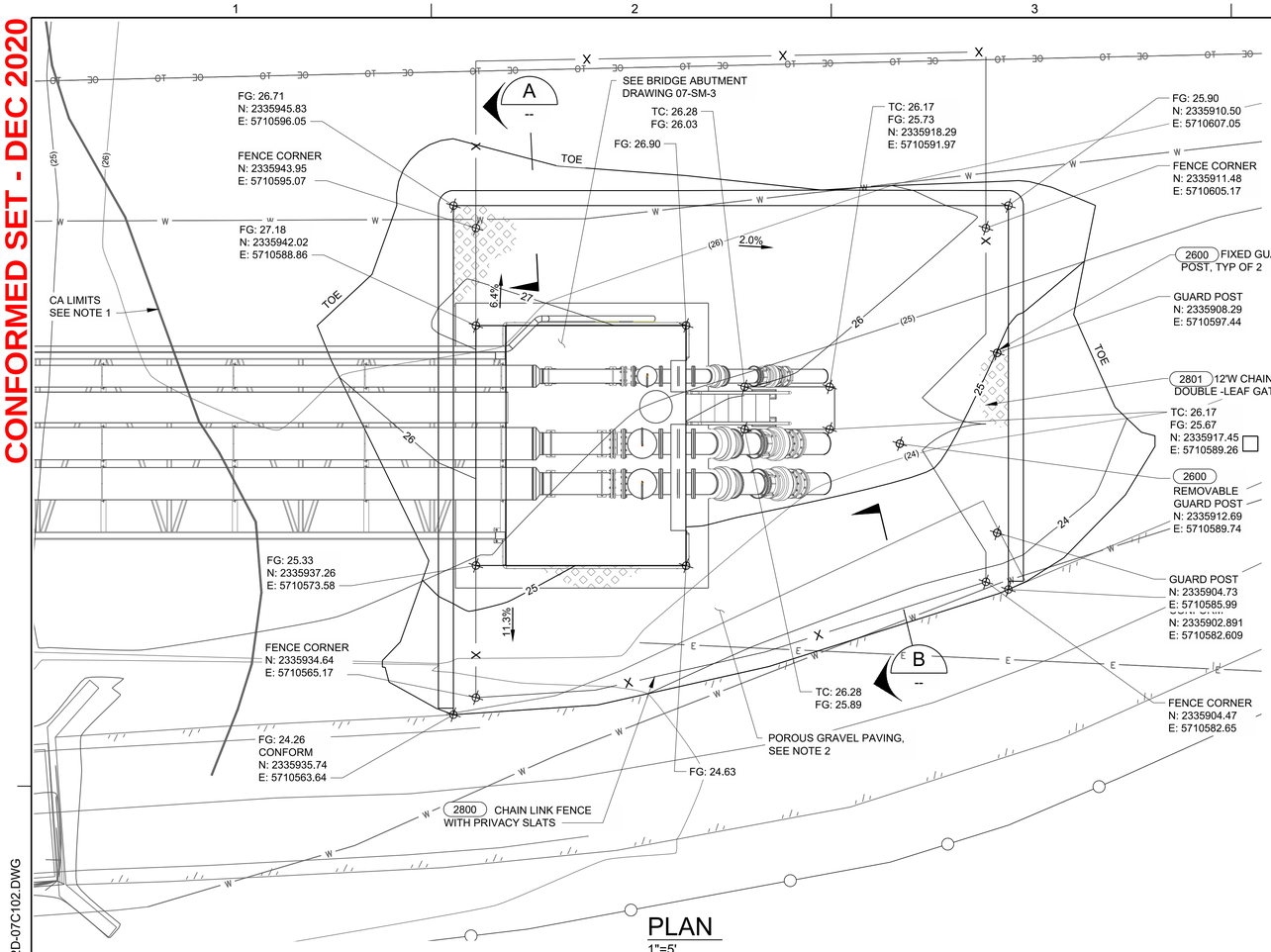

PLAN
1"=5'

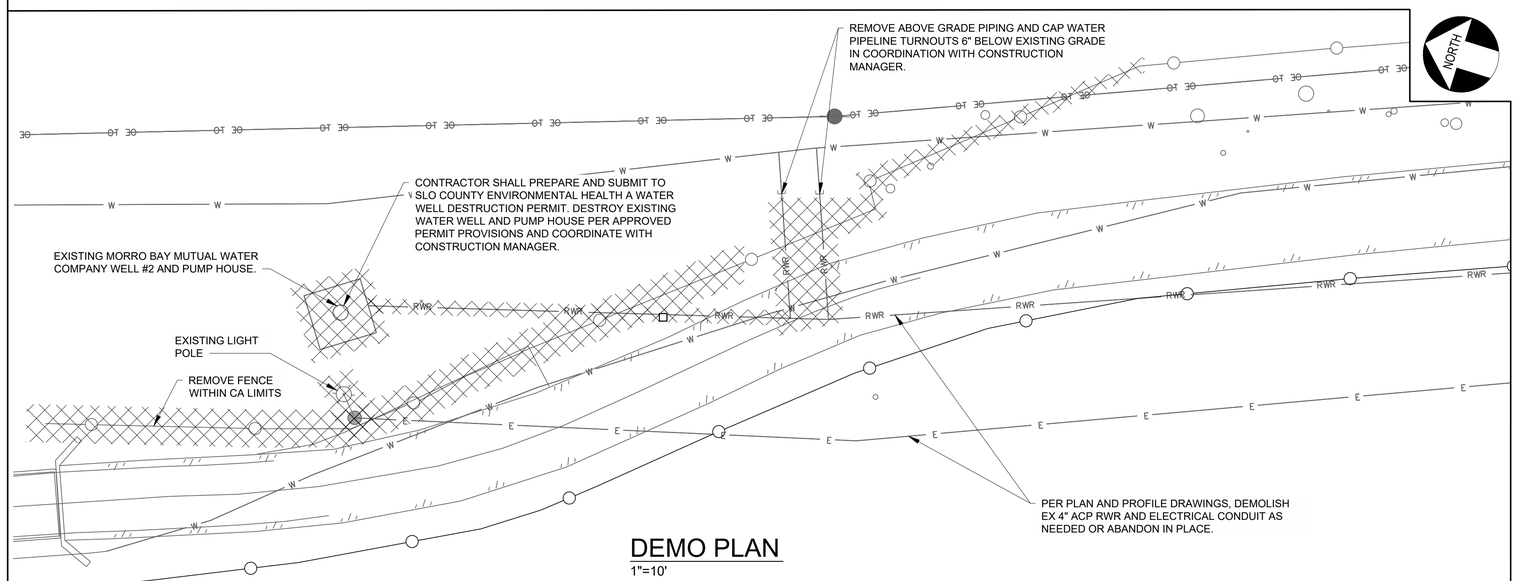

DEMO PLAN
1"=10'

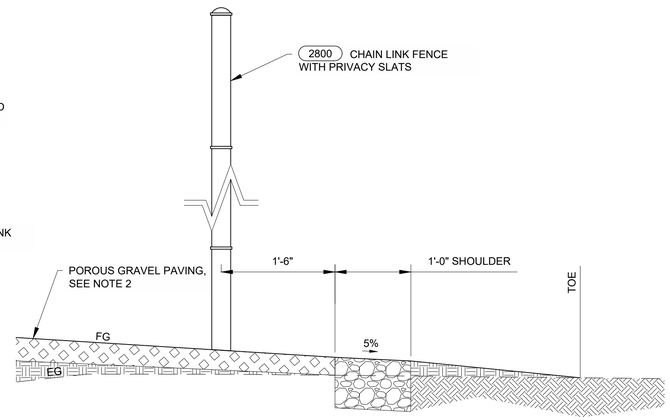

A SECTION
-- 1"= 1'

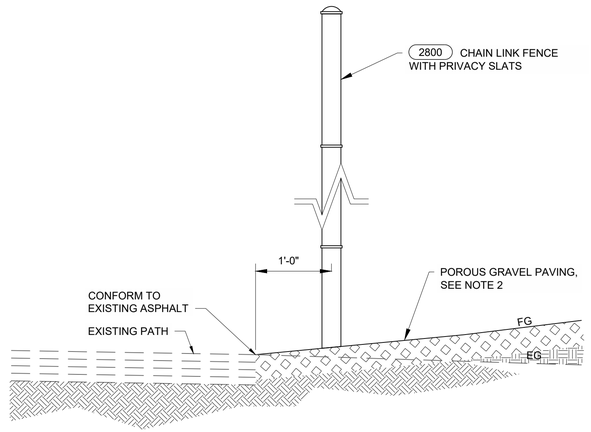

B SECTION
-- 1"=1'

NORTH

NOTES:

1. CONSTRUCTION ACTIVITY (CA) LIMITS OFFSET 3' FROM EDGE OF WETLAND BOUNDARY. GROUND DISTURBING ACTIVITIES SHALL NOT EXTEND PAST CA LIMITS. SWPPP BMPS SHALL BE INSTALLED PER APPROVED SWPPP PLAN AT A MINIMUM ALONG CA LIMITS.
2. POROUS GRAVEL PAVING SHALL BE AN UNDERLYING H-20 RATED PLASTIC GRID SYSTEM WITH BACKING FABRIC AND TOPPED WITH 1/2" CRUSHED ROCK. PLACE 4" CL2 AB AT 90% RELATIVE COMPACTION UNDERNEATH BACKING FABRIC. INVISIBLE STRUCTURES GRAVELPAVE2, NDS EZ-ROLL GRAVEL PAVER, OR EQUAL.

LEGEND:

DEMOLISH EXISTING LIGHT POLE, WELL PUMP HOUSE, 4" ACP RWR PIPING, ELECTRICAL CONDUIT, AND FENCE.

1 0 1 2 FEET
SCALE 1"=1'

5 0 5 10 FEET
SCALE 1"=5'

10 0 10 20 FEET
SCALE 1"=10'

REGISTERED PROFESSIONAL ENGINEER
RICHARD K. ALEXANDER
No. C67194
CIVIL
STATE OF CALIFORNIA
05/29/2020

DESIGN P. WEBSTER
DRAWN P. WEBSTER
CHECKED T. LEWIS
APPROVED M FISHER

WATERWORKS ENGINEERS
2260 Douglas Blvd, Suite 105 • Roseville, CA 95661 • 916-780-2888

CITY OF MORRO BAY
WATER RECLAMATION FACILITY
LIFT STATION AND OFFSITE PIPELINES

CIVIL
SOUTHERN BRIDGE ABUTMENT GRADING PLAN

DATE MAY 2020
PROJECT NUMBER 17-082
DRAWING NUMBER 07-C-2
SHEET NUMBER 122

CONFORMED SET - DEC 2020

EXCAVATION/GRADING NOTES:

1. THE LOWER 4 FEET OF THE ABUTMENT EXCAVATION SHOULD BE PERFORMED WITH CAUTION, USING AN EXCAVATOR TYPE OF EQUIPMENT, AND SUCH THAT CONSTRUCTION EQUIPMENT WILL NOT TRAVERSE ACROSS THE BOTTOM OF THE EXCAVATION.
2. EXCAVATIONS FOR THE ABUTMENT SHOULD BE DEEPENED TO ALLOW AT LEAST 2 FEET OF CRUSHED ROCK (AGGREGATE FOR STABILIZATION) ENCASED IN A GEOTEXTILE/STABILIZATION TO BE PLACED ON THE UINDISTURBED SUBGRADE AT THE BOTTOM OF THE EXCAVATION.
3. PLACE THE AGGREGATE FOR STABILIZATION IN (2) 1 FOOT LIFTS. THE FIRST LIFT SHOULD BE PLACED WITH AN EXCAVATOR OR LIGHT EQUIPMENT SUCH AS A BOB CAT. CONSOLIDATE EACH LIFT W/ A MINIMUM OF (4) PASSES WITH A VIBRATORY PLATE OR BY TRACK WALKING WITH A WIDE-TRACKED DOZER. THE SECOND LIFT MAY BE PLACED USING A WIDE-TRACK DOZER OR SIMILAR EQUIPMENT.
4. EXTEND THE AGGREGATE FOR STABILIZATION 3 FEET MINIMUM BEYOND THE FOOTPRINT OF THE STRUCTURE & COMPLETELY ENCOMPASS WITH GEOTEXTILE FABRIC.
5. A LEVELING COURSE OF STRUCTURAL FILL MAY BE PLACED AND COMPACTED OVER THE STABILIZATION LAYER IF DESIRED.

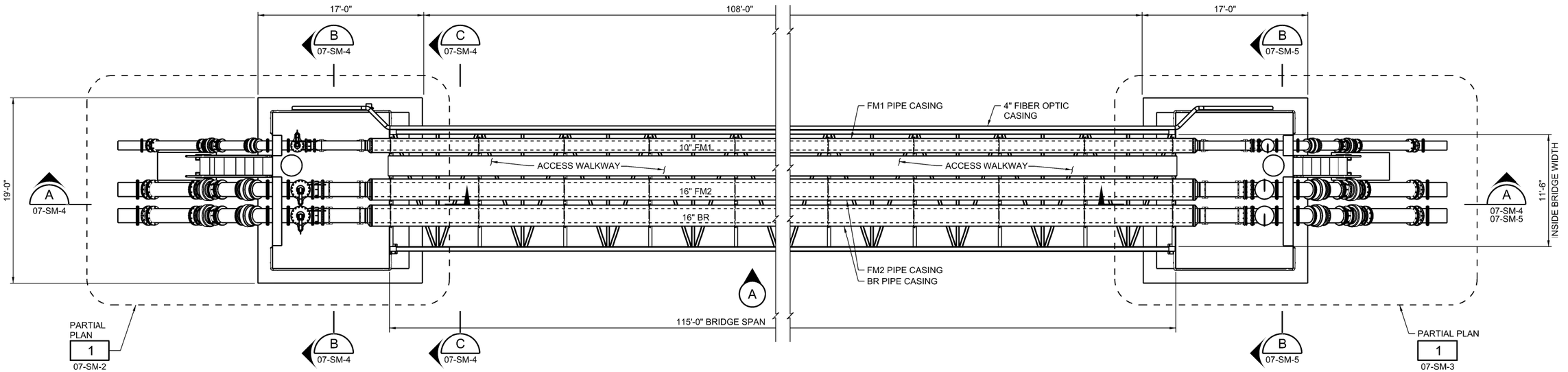

PLAN
3/16" = 1'-0"

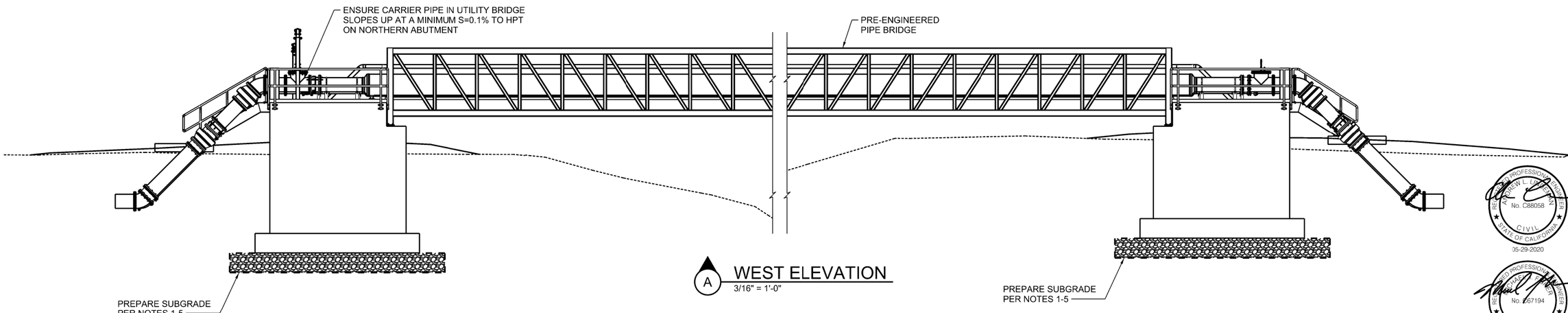

A WEST ELEVATION
3/16" = 1'-0"

4 0 4 8 FEET
SCALE 3/16"=1'-0"

REGISTERED PROFESSIONAL ENGINEER ANDREW L. FISHER No. C88058 CIVIL STATE OF CALIFORNIA
05-29-2020

REGISTERED PROFESSIONAL ENGINEER MICHAEL J. FISHER No. 087194 CIVIL STATE OF CALIFORNIA
05-29-2020

DESIGNED JK/AL/TL
DRAWN C WORRALL
CHECKED JR/MF
APPROVED M FISHER

WATERWORKS ENGINEERS
2280 Douglas Blvd., Suite 105 • Roseville, CA 95661 • 916-780-2888

CITY OF MORRO BAY
WATER RECLAMATION FACILITY
LIFT STATIONS AND OFFSITE PIPELINES

STRUCTURAL / MECHANICAL
UTILITY BRIDGE
PLAN AND ELEVATION

DATE MAY 2020
PROJECT NUMBER 17-082
DRAWING NUMBER 07-SM-1
SHEET NUMBER 123

FILENAME: 1782D-07SM101.DGN PLOT DATE: 5/1/2020 7:30:47 AM

CONFORMED SET - DEC 2020

NOTES:

1. H-20 RATED 24" DIA COMPOSITE COVER AND FRAME WITH LOCKING MECHANISM. ADEQUATELY SUPPORT FRAME PER MANUFACTURERS RECOMMENDATION. FIBRELITE FL600 OR EQ AND (2121).
2. FO CONDUIT CONTINUATION NOT DEPICTED. TRANSITION TO MATERIAL SPECIFIED ON PLAN AND PROFILE 18" ABOVE FG.

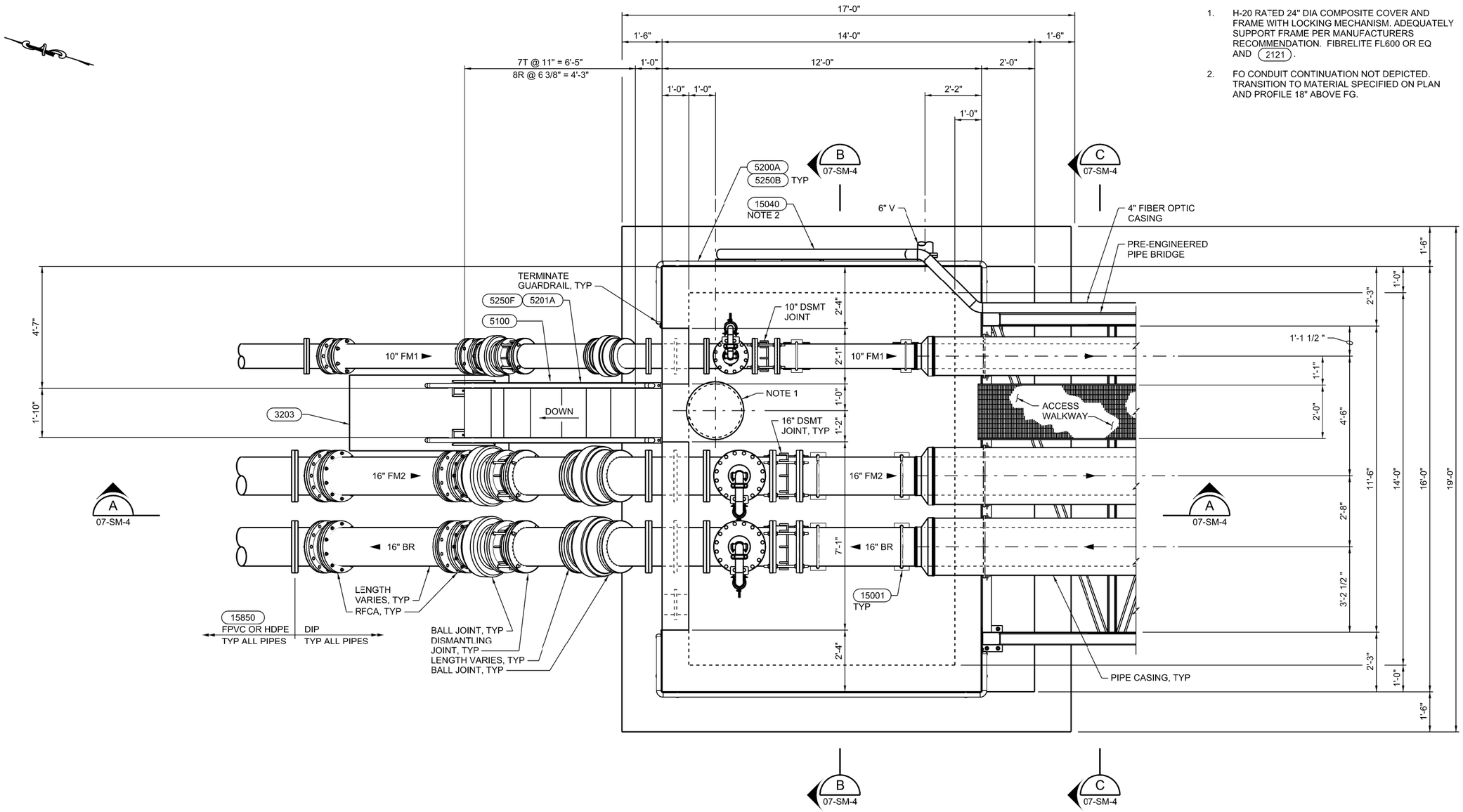

1 PARTIAL PLAN
07-SM-1 1/2" = 1'-0"

2 0 2 4 FEET
SCALE 1/2"=1'-0"

DESIGNED JK/AL/TL
DRAWN C WORRALL
CHECKED JR/MF
APPROVED M FISHER

WATERWORKS ENGINEERS
2260 Douglas Blvd., Suite 105 • Roseville, CA 95661 • 916-780-2888

CITY OF MORRO BAY
WATER RECLAMATION FACILITY
LIFT STATIONS AND OFFSITE PIPELINES

STRUCTURAL / MECHANICAL
UTILITY BRIDGE
NORTH ABUTMENT
PARTIAL PLAN

REGISTERED PROFESSIONAL ENGINEER ANDREW L. LINDEMAN No. C88058 CIVIL STATE OF CALIFORNIA 05-29-2020

REGISTERED PROFESSIONAL ENGINEER MICHAEL F. FISHER No. C67194 CIVIL STATE OF CALIFORNIA 05-29-2020

DATE MAY 2020
PROJECT NUMBER 17-082
DRAWING NUMBER 07-SM-2
SHEET NUMBER 124

FILENAME: 1782D-07SM102.DGN PLOT DATE: 5/26/2020 11:23:02 AM

CONFORMED SET - DEC 2020

NOTES:

1. H-20 RATED 24" DIA COMPOSITE COVER AND FRAME WITH LOCKING MECHANISM. ADEQUATELY SUPPORT FRAME PER MANUFACTURERS RECOMMENDATION. FIBRELITE FL600 OR EQ AND (2121).
2. FO CONDUIT CONTINUATION NOT DEPICTED. TRANSITION TO MATERIAL SPECIFIED ON PLAN AND PROFILE 18" ABOVE FG.

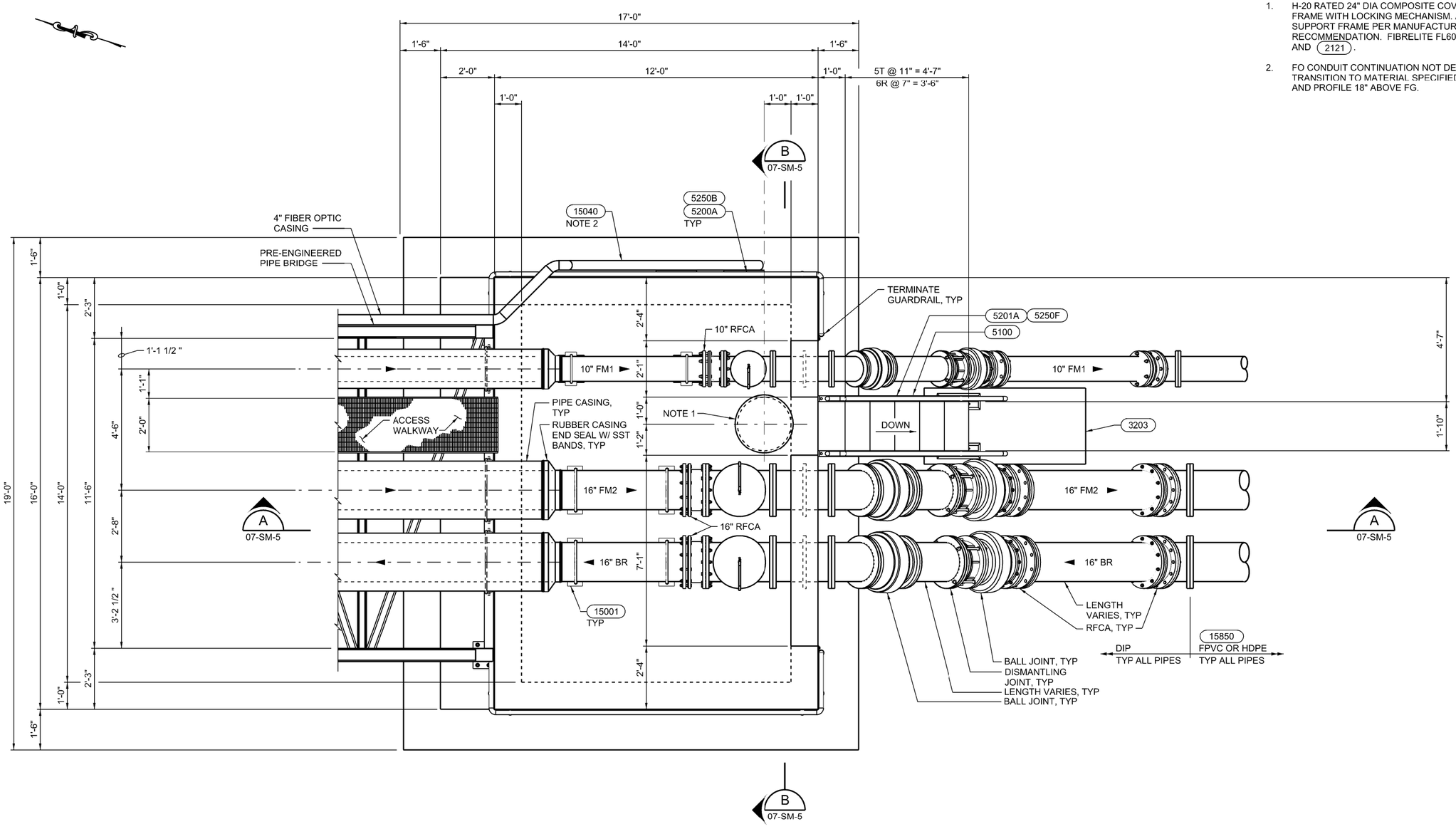

1 PARTIAL PLAN
07-SM-1 1/2" = 1'-0"

2 0 2 4 FEET
SCALE 1/2"=1'-0"

DESIGNED JK/AL/TL
DRAWN C WORRALL
CHECKED JR/MP
APPROVED M FISHER

WATERWORKS ENGINEERS
2260 Douglas Blvd., Suite 105 • Roseville, CA 95661 • 916-780-2888

CITY OF MORRO BAY
WATER RECLAMATION FACILITY
LIFT STATIONS AND OFFSITE PIPELINES

STRUCTURAL / MECHANICAL
UTILITY BRIDGE
SOUTH ABUTMENT
PARTIAL PLAN

REGISTERED PROFESSIONAL ENGINEER ANDREW L. LINDEMAN No. C88058 CIVIL STATE OF CALIFORNIA 05-29-2020

REGISTERED PROFESSIONAL ENGINEER MICHAEL J. FISHER No. C67194 CIVIL STATE OF CALIFORNIA 05-29-2020

DATE MAY 2020
PROJECT NUMBER 17-082
DRAWING NUMBER 07-SM-3
SHEET NUMBER 125

FILENAME: 1782D-07SM103.DGN PLOT DATE: 5/26/2020 11:13:04 AM

CONFORMED SET - DEC 2020

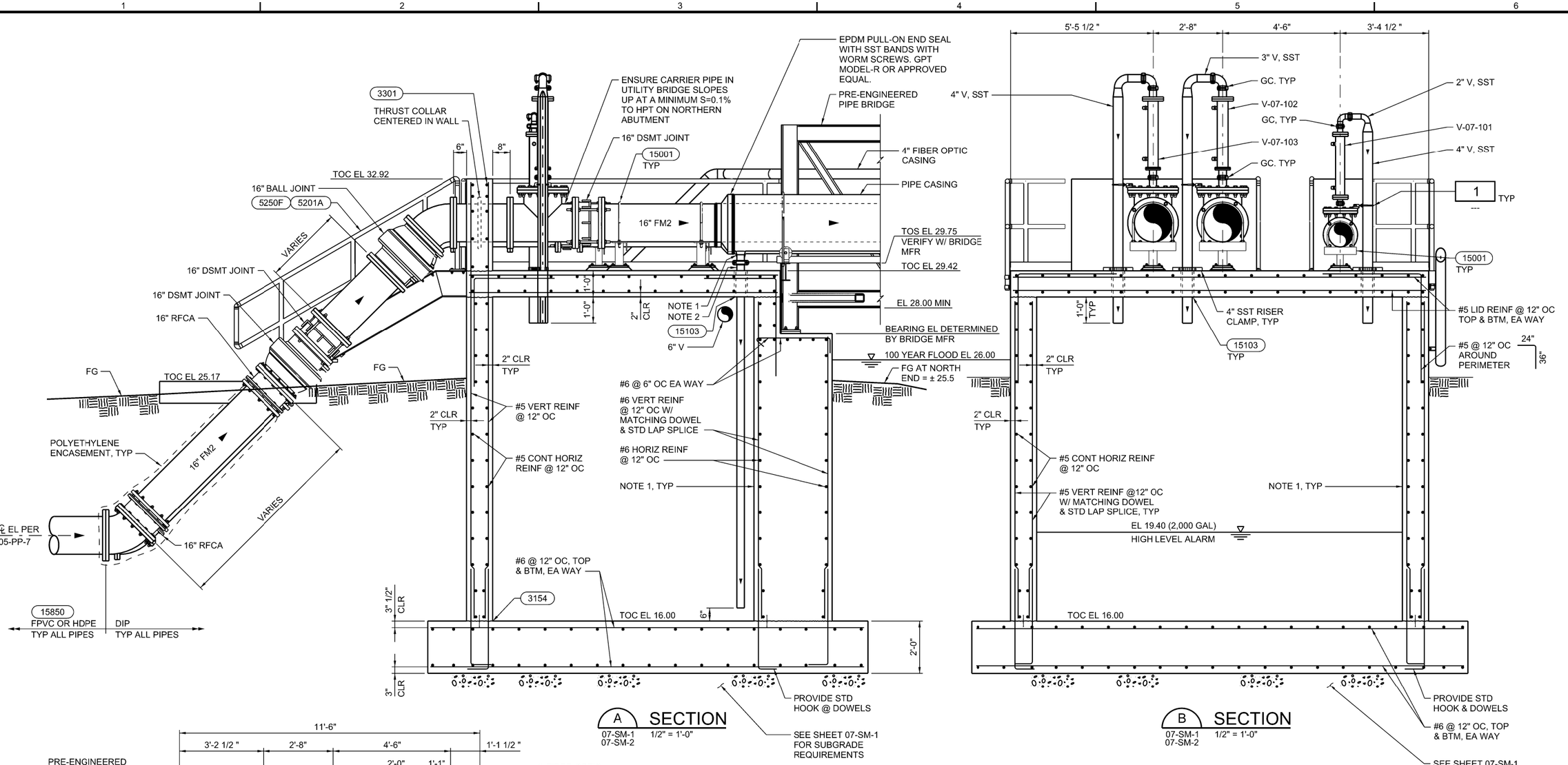

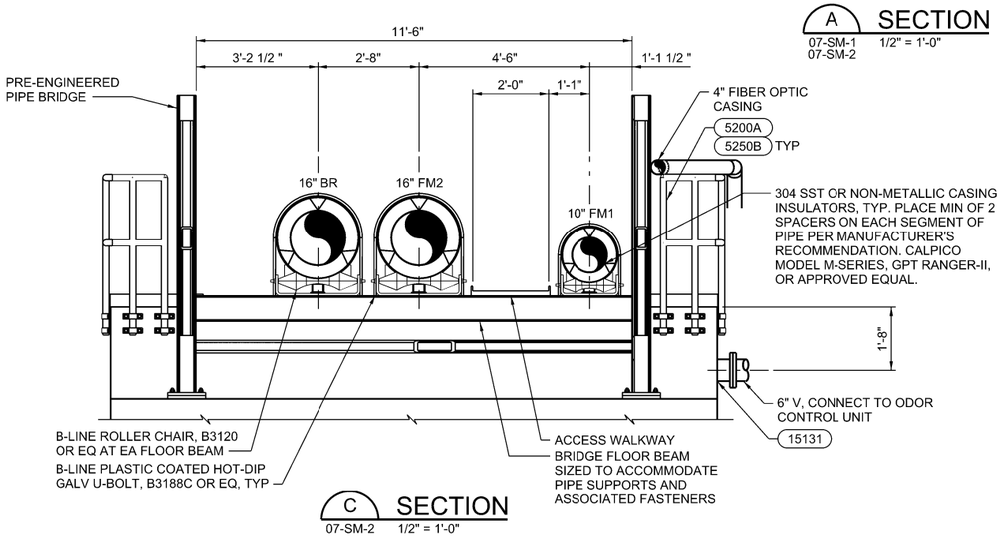

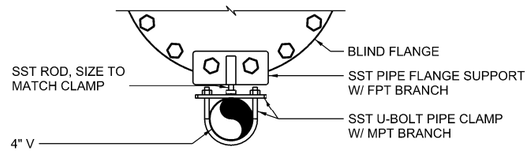

PLAN

1 DETAIL
--- 1 1/2" = 1'-0"

NOTES:

1. 3" WELD-O-LET W/ 3" SST HEX NIPPLE TO QUICK RELEASE COUPLING (MALE).
2. SST QUICK RELEASE COUPLING (FEMALE) 3" WRAPPED EPDM SUCTION HOSE (FLEXIBLE). ACCOMODATES CASING MOVEMENT AND THERMAL EXPANSION.

VAULT NOTES:

1. COAT ALL INTERIOR CONCRETE SURFACES W/ MULTI-COMPONENT RESIN-BASED MORTAR LINING SYSTEM SPECIFICALLY DESIGNED TO PROTECT FROM CHEMICAL ATTACK/CORROSION PER SPECIFICATION SECTION 09875 (REQUIRED @ NORTH ABUTMENT VAULT ONLY).

6" 0 6" 1 FEET
SCALE 1 1/2"=1'-0"
2 0 2 4 FEET
SCALE 1/2"=1'-0"

REGISTERED PROFESSIONAL ENGINEER — No. C88058 — CIVIL — STATE OF CALIFORNIA
05-29-2020

REGISTERED PROFESSIONAL ENGINEER — No. 087194 — CIVIL — STATE OF CALIFORNIA
05-29-2020

DESIGNED JK/AL/TL
DRAWN C WORRALL
CHECKED JR/MP
APPROVED M FISHER

WATERWORKS ENGINEERS
2280 Douglas Blvd., Suite 105 • Roseville, CA 95661 • 916-780-2888

CITY OF MORRO BAY
WATER RECLAMATION FACILITY
LIFT STATIONS AND OFFSITE PIPELINES

STRUCTURAL / MECHANICAL

UTILITY BRIDGE NORTH ABUTMENT SECTIONS AND DETAIL

DATE MAY 2020
PROJECT NUMBER 17-082
DRAWING NUMBER 07-SM-4
SHEET NUMBER 126

FILENAME: 1782D-07SM201.DGN PLOT DATE: 5/26/2020 11:34:36 AM

CONFORMED SET - DEC 2020

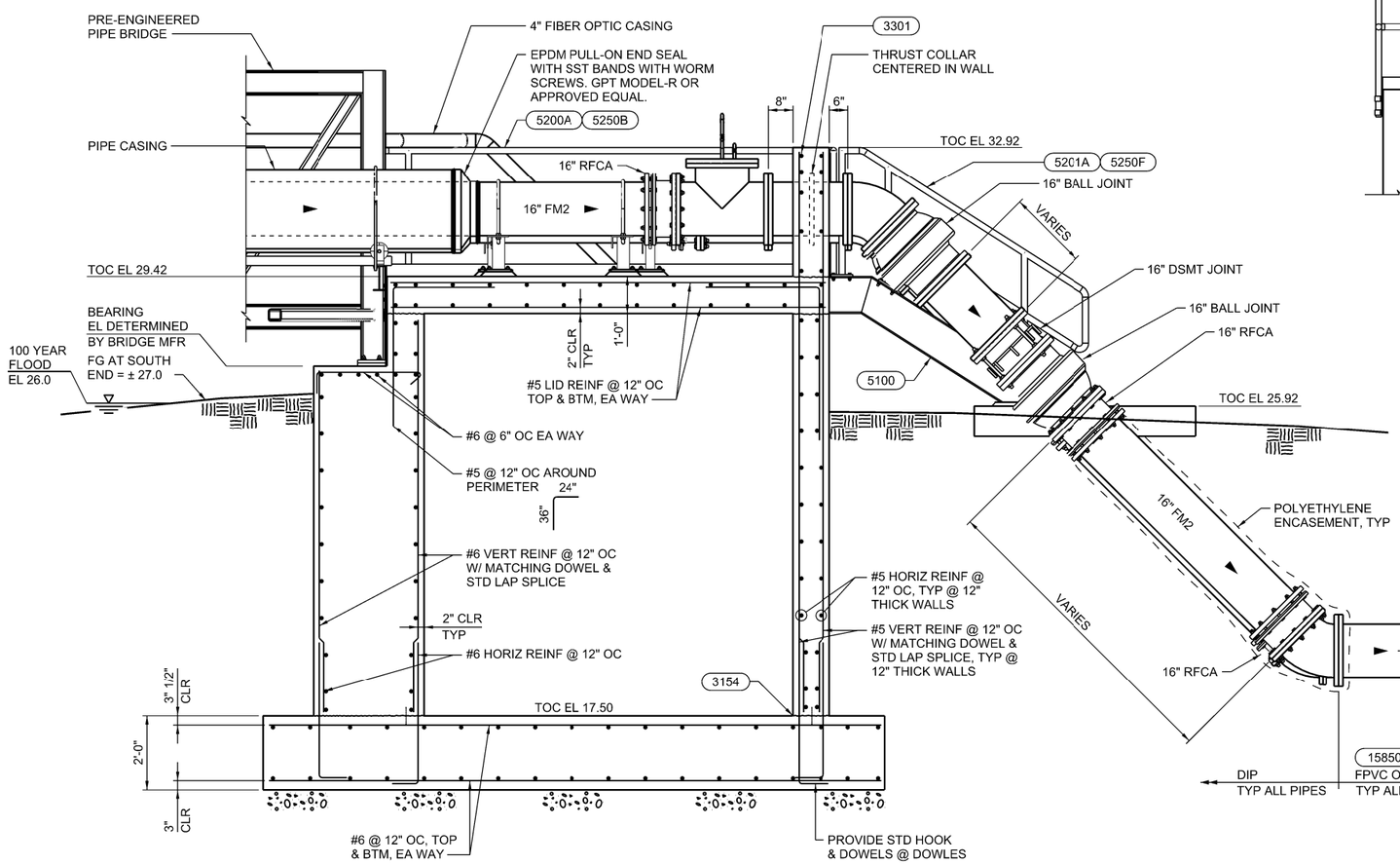

A SECTION
07-SM-1 1/2" = 1'-0"
07-SM-3

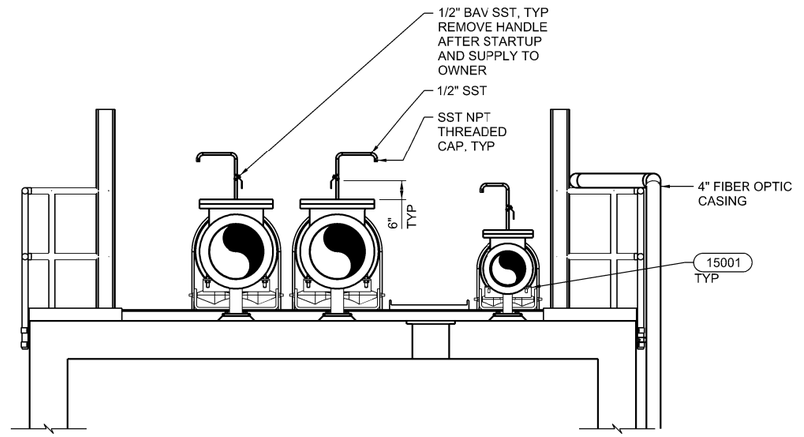

B SECTION
07-SM-1 1/2" = 1'-0"
07-SM-3

2 0 2 4 FEET
SCALE 1/2"=1'-0"

DESIGNED JK/AL/TL
DRAWN C WORRALL
CHECKED JR/MP
APPROVED M FISHER

WATERWORKS ENGINEERS
2260 Douglas Blvd., Suite 105 • Roseville, CA 95661 • 916-780-2888

CITY OF MORRO BAY
WATER RECLAMATION FACILITY
LIFT STATIONS AND OFFSITE PIPELINES

STRUCTURAL / MECHANICAL
UTILITY BRIDGE
SOUTH ABUTMENT SECTIONS

REGISTERED PROFESSIONAL ENGINEER ANDREW L. LINDEMAN No. C88058 CIVIL STATE OF CALIFORNIA 05-29-2020

REGISTERED PROFESSIONAL ENGINEER RICHARD L. FISHER No. C67194 CIVIL STATE OF CALIFORNIA 05-29-2020

DATE MAY 2020
PROJECT NUMBER 17-082
DRAWING NUMBER 07-SM-5
SHEET NUMBER 127

FILENAME: 1782D-07SM202.DGN PLOT DATE: 5/26/2020 2:11:17 PM

CONFORMED SET - DEC 2020

RO DISCHARGE
DESAL FEED
ATASCADERO RD
CONTRACTOR TO SAWCUT AND REPAIR ROADWAY, SIDEWALK, CURB AND GUTTER PER CITY OF MORRO BAY STANDARD DETAILS
EXTENT OF SAWCUT
N: 2336741.65
E: 5709264.65
EXTENT OF SAW CUT
N: 2336745.15
E: 5709293.51
DEMO AS NEEDED FOR INCOMING 10" FM1 AND 16" FM2
DEMOLISH EXISTING FENCE
EXTENT OF AC DEMO
N: 2336725.32
E: 5709201.41
EXTENT OF AC DEMO
N: 2336740.07
E: 5709320.90
DEMOLISH EXISTING FENCE
CAP AND ABANDON EXISTING WATER AND DEMO EXISTING WATER METER
CAP AND ABANDON EXISTING GAS LINE AND DEMO GAS METER
DEMO SS STRUCTURE AND PIPING
CONTRACTOR REMOVE EXISTING SS PIPING AS NECESSARY AND TO PLUG AND ABANDON PER
1
--
DEMO EXISTING WATER
DEMO EXISTING FUEL TANK SLAB
CONSOLIDATED MAINTENANCE BUILDING
CAP AND DEMOLISH EXISTING 6" WATER
CONTRACTOR TO DEMOLISH EXISTING CONSOLIDATED MAINTENANCE BUILDING. COORDINATE WITH THE CITY REGARDING SALVAGING, RECYCLING AND DISPOSAL
CONTRACTOR TO REMOVE EXISTING SD PIPING AND REPLACE PER DWG 10-Y-1
RELOCATE EXISTING WATER METER PER DWG 10-Y-1
DEMO EXISTING WATER
SEE NOTE 1
DEMO EXISTING WATER
DEMO EXISTING WATER METER
DEMO CONCRETE WASH BAY PAD, DRAINS
DEMO
EXTENT OF AC DEMO
N: 2336621.32
E: 5709335.85
GREASE TRAP
UNIDENTIFIED BOX
TANK
TO CONCRETE PLANT
EXTENT OF AC DEMO
N: 2336606.19
E: 5709216.28
DENSE BRUSH
TANKS

NOTES:

1. HIGH PRIORITY UTILITY VERIFICATION REQUIRED FOR EXISTING WATER TO RO FACILITY.

INSERT PLUG OR FORM INTO THE PIPE TO MAINTAIN THE SHAPE DURING CURING
PLUG EXISTING PIPE WITH 2500 PSI CONCRETE PLUG LENGTH = 2X PIPE DIAMETER (12" MIN.)
ABANDON IN PLACE
PLUG
CUT AND REMOVE PIPE PER PLAN

1 PIPE PLUG AND ABANDONMENT DETAIL
-- NTS

10 0 10 20 FEET
SCALE 1"=10'

REGISTERED PROFESSIONAL ENGINEER
KRISTEN MARIE ALACON
No. C70952
CIVIL
STATE OF CALIFORNIA
05/29/2020

DESIGN K. ALACON
DRAWN L. CHAPMAN
CHECKED K. ALACON
APPROVED M. FISHER

WATERWORKS ENGINEERS
2360 Douglas Blvd, Suite 105 • Roseville, CA 95661 • 916-780-2888

CITY OF MORRO BAY
WATER RECLAMATION FACILITY
LIFT STATION AND OFFSITE PIPELINES

CIVIL
PUMP STATION A DEMOLITION PLAN

DATE MAY 2020
PROJECT NUMBER 17-082
DRAWING NUMBER 10-D-1
SHEET NUMBER 128

L:\CAD\PROJECTS\17-082 MORRO BAY PS AND PIPELINE_(S)\PROJECT FILES\DELIVERABLES\1782D-10D100.DWG

JOB NUMBER: 00-000 FILENAME: 1782D-10D100.DWG PLOT DATE: 06/11/20 PLOT TIME: 09:43:09

CONFORMED SET - DEC 2020

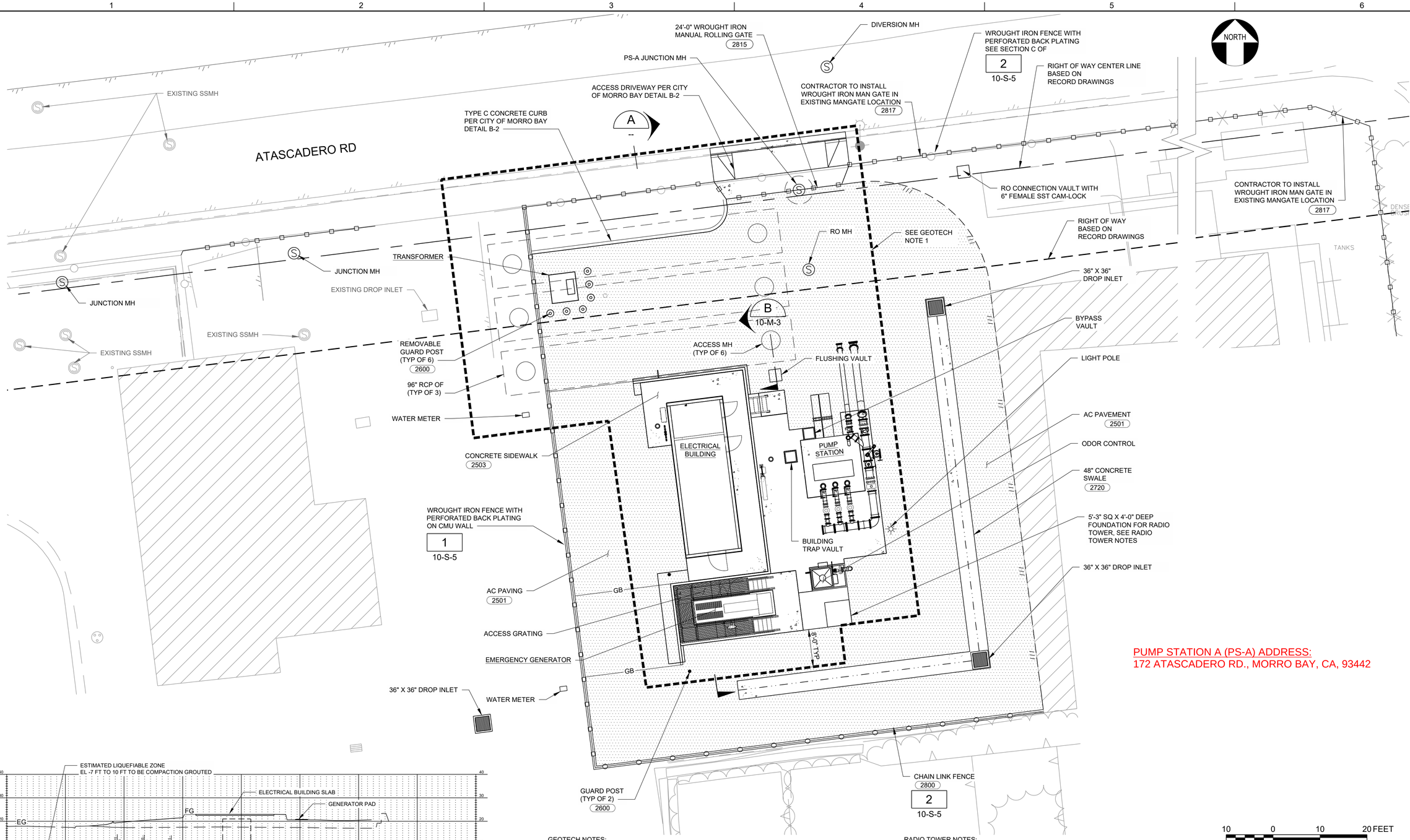

PUMP STATION A (PS-A) ADDRESS:
172 ATASCADERO RD., MORRO BAY, CA, 93442

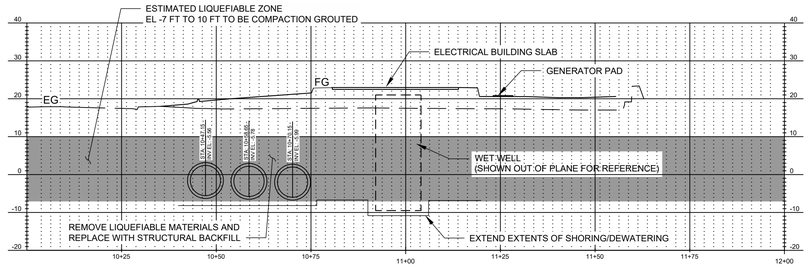

A SECTION
- 1" = 20'

GEOTECH NOTES:

1. SOIL IMPROVEMENTS IN THIS AREA, EITHER COMPACTION GROUTING PER SECTION 03700 OR REMOVE ALL MATERIALS TO EL -7.0 AND REPLACE WITH STRUCTURAL FILL, COMPACTED TO 95% RELATIVE COMPACTION.
2. EXTEND COMPACTION GROUT ZONE 8' BEYOND FOUNDATIONS.

CONSTRUCTION SEQUENCING WITH COMPACTION GROUTING:

1. SHORE/DEWATER WET WELL AND 96" RCP EXCAVATIONS.
2. INSTALL ANY PIPING THAT WILL BE BELOW 5 FEET AND BACKFILL TO EG.
3. COMPACTION GROUTING OF PAD FOR ELECTRICAL BUILDING.
4. PLACE FILL TO FINISH GRADE - CONSTRUCT ELECTRICAL BUILDING.

RADIO TOWER NOTES:

1. RADIO TOWER DESIGN SHALL BE A DEFFERED SUBMITTAL OBTAINED BY THE CONTRACTOR. ENGINEER SHALL REVIEW AND APPROVE THE TOWER SUBMITTAL PRIOR TO CONSTRUCTION.
2. COORDINATE RADIO TOWER DESIGN WITH ELECTRICAL SYSTEMS ENGINEER AND DRAWINGS.
3. TOWER PLANS AND CALCULATIONS SHALL BE SIGNED AND SEALED BY A CALIFONRIA LICENSED CIVIL OR STRUCTURAL ENGINEER.
4. SEE STRUCTURAL NOTES ON SHEET G-7 FOR WIND AND SEISMIC DESIGN CRITERIA.

10 0 10 20 FEET
SCALE 1"=10'

REGISTERED PROFESSIONAL ENGINEER
KRISTINA MARIE P. ALACON
No. C70952
CIVIL
STATE OF CALIFORNIA
05/29/2020

DESIGN K. ALACON
DRAWN L. CHAPMAN
CHECKED K. ALACON
APPROVED M. FISHER

WATERWORKS ENGINEERS
2260 Douglas Blvd, Suite 105 • Roseville, CA 95661 • 916-780-2888

CITY OF MORRO BAY
WATER RECLAMATION FACILITY
LIFT STATION AND OFFSITE PIPELINES

CIVIL
PUMP STATION A OVERALL PLAN

DATE MAY 2020
PROJECT NUMBER 17-082
DRAWING NUMBER 10-C-1
SHEET NUMBER 129

L:\CAD\PROJECTS\17-082 MORRO BAY PS AND PIPELINE_(S)\PROJECT FILES\DELIVERABLES\1782D-10C100.DWG

JOB NUMBER: 00-000 FILENAME: 1782D-10C100.DWG PLOT DATE: 06/11/20 PLOT TIME: 09:39:36

CONFORMED SET - DEC 2020

NORTH

ATASCADERO RD

FG: 17.9± CONFORM

STEP WALL @ 1V: 2H IN 8" INTERVALS

TC: 22.20

EP: 21.70
N: 2336714.39
E: 5709215.27

JUNCTION MH
RIM: 17.37
N: 2336714.58
E: 5709164.60

48" DIA SSMH
RIM: 17.23
N: 2336712.26
E: 5709211.12

EXST DI
TG: 16.7±
N: 2336701.3±
E: 5709193.5±

EP: 21.58
N: 2336709.95
E: 5709218.89

TRANSFORMER PAD, 5'-8" X 6'-2"
TC: 22.25

EXST SSMH
RIM: 16.9±
N: 2336697.2±
E: 5709166.8±

48" DIA SSMH
RIM: 16.98
N: 2336700.85
E: 5709212.56

EP: 21.73
N: 2336703.83
E: 5709219.63

48" DIA SSMH
RIM: 16.92
N: 2336689.44
E: 5709214.00

EP/TOW: 22.88
N: 2336686.77
E: 5709236.91

TC: 22.98
N: 2336682.62
E: 5709243.98

TC: 22.98
HP/EP: 22.45

TC/EP: 22.88

TC/EP: 22.98

TC: 22.98

TC/EP: 22.98
N: 2336649.55
E: 5709248.17

1
10-S-5

EP: 22.27
GUARD POST
N: 2336646.08
E: 5709244.58

EP/TOW: 22.88
N: 2336644.09
E: 5709244.83

TC/EP: 20.79

GENERATOR PLAN
SEE DWG 10-S-3
TC: 23.05

36"X36" DROP INLET
TG: 16.53
N: 2336614.26
E: 5709204.84

EP: 21.20

TC/EP: 20.79

EP/TOW: 20.79

A
--

EP: 21.20
N: 2336605.26
E: 5709229.08
TOW EL: 23.13

2
10-S-5

PS-A JUNCTION MH
RIM: 17.96
N: 2336728.06
E: 5709272.24

DIVERSION MH
RIM: 17.90
N: 2336754.32
E: 5709278.16

TC: 18.0± CONFORM

TC: 18.14

TC: 17.9± CONFORM

EP: 18.06
N: 2336730.37
E: 5709258.61

TC/EP: 18.12

EP: 18.92
N: 2336719.11
E: 5709252.58

EP: 18.13
N: 2336732.92
E: 5709278.45

D
--

B
--

B
10-S-5

TC/EP: 18.23

R5.0'

5.0%

EP: 21.15

EP: 21.35

96" Ø OF (TYP OF 3)

5'-6"

12.3%

48" DIA SSMH
RIM: 18.42
N: 2336718.84
E: 5709263.37

RO MH
RIM: 18.47
N: 2336711.09
E: 5709274.32

48" DIA SSMH
RIM: 19.11
N: 2336707.43
E: 5709264.81

48" DIA SSMH
RIM: 19.84
N: 2336696.03
E: 5709266.25

EP: 22.15

10.1%

GB

1.1%

ELECTRIC BUILDING
FF: 23.00

1.0%

2.1%

2.0%

11.0%

0.5%

C
--

1.1%

GB

EP: 22.27

3.8%

2.6%

4.9%

GB

TC/EP: 20.79

EP: 21.20

TC/EP: 20.79

EP/TOW: 20.79

TC/EP: 17.92

TC/EP: 17.92

EP: 18.41± CONFORM
N: 2336708.04
E: 5709312.84

EXISTING R.O. FACILITY

36"X36" DROP INLET
TG: 17.79
N: 2336703.03
E: 5709301.38

EP: 20.47

TC/TOW: 22.88

TC/EP: 20.46

TC/EP: 20.36

EP: 19.64

EP: 20.00

EP: 20.43

PUMP STATION
SEE DWG 10-S-1
TC: 21.00

HP/EP: 20.64

EP: 20.00
N: 2336664.10
E: 5709286.14

EP: 20.32
N: 2336662.60
E: 5709274.24

LIGHT POLE
N: 2336655.81
E: 5709291.83

EP: 19.32

EP: 20.05

EP: 20.20

TC/EP: 18.97

36"X36" DROP INLET
TG: 18.60
N: 2336627.93
E: 5709310.87

EP: 18.97

EP: 19.33
N: 2336617.31
E: 5709324.30
TOW EL: 23.13

EP: 19.99
N: 2336643.50
E: 5709282.62

ODOR CONTROL PAD
SEE DWG 10-S-1
TC: 21.00

TC/EP: 19.80

EP: 20.17
N: 2336642.55
E: 5709275.09

TC/EP: 20.26

TC/EP: 20.18

TC/EP: 20.22

TC/EP: 20.22

GUARD POST
N: 2336625.46
E: 5709248.92

TC/EP: 20.37

TC/TOW: 22.88

RETAINING WALL, SEE DETAIL
1
10-S-5

WROUGHT IRON FENCE

TOW: 23.00

FG: SEE PLAN

ASPHALT CONCRETE PER DETAIL 2501

FG

1
10-S-5

EG

A SECTION
-- 1/2"=1'

TC: SEE PLAN

EP: SEE PLAN

ASPHALT CONCRETE PER DETAIL 2501

TOE

VARIES

FG

TC/TW: 22.88

EG

CONCRETE SIDEWALK PER DETAIL 2503

FG

RETAINING WALL, SEE DWG 10-AS-2 AND B 10-AS-5

EP: SEE PLAN

CONCRETE SIDEWALK PER DETAIL 2503

B SECTION
-- 1/2"=1'

C SECTION
-- 1/2"=1'

TOW: 23.13

TOW: 22.46

TOW: 21.79

TOW: 21.12

TOW: 20.45

TOW: 19.78

TOW: 19.11

FG: 17.9± CONFORM

RETAINING WALL, SEE DETAIL
1
10-S-5

EG

D SECTION
-- 1/2"=1'

10 0 10 20 FEET
SCALE 1"=10'

REGISTERED PROFESSIONAL ENGINEER
KRISTINA MARIE F. ALACON
No. C70952
CIVIL
STATE OF CALIFORNIA
05/29/2020

DESIGN K. ALACON
DRAWN L. CHAPMAN
CHECKED K. ALACON
APPROVED M. FISHER

WATERWORKS ENGINEERS
2260 Douglas Blvd, Suite 105 • Roseville, CA 95661 • 916-780-2888

CITY OF MORRO BAY
WATER RECLAMATION FACILITY
LIFT STATION AND OFFSITE PIPELINES

CIVIL

PUMP STATION A GRADING PLAN

DATE MAY 2020
PROJECT NUMBER 17-082
DRAWING NUMBER 10-C-2
SHEET NUMBER 130

L:\CAD\PROJECTS\17-082 MORRO BAY PS AND PIPELINE_(S)\PROJECT FILES\DELIVERABLES\1782D-10C101.DWG

JOB NUMBER: 00-000 FILENAME: 1782D-10C101.DWG PLOT DATE: 06/11/20 PLOT TIME: 09:42:18

CONFORMED SET - DEC 2020

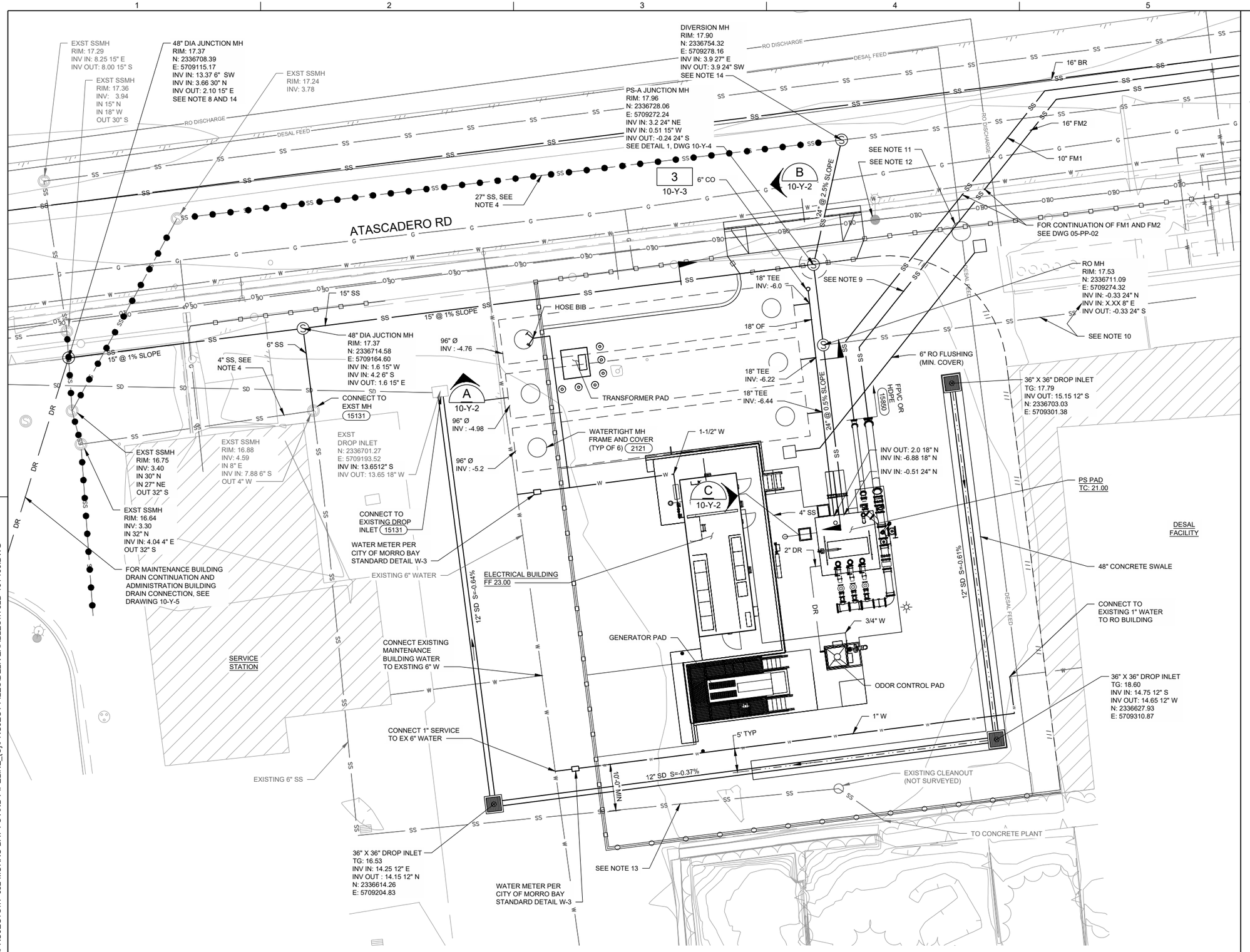

NORTH

NOTES:

1. SEWER MANHOLES SHALL BE PER CITY OF MORRO BAY STANDARD DETAIL S-3 UNLESS OTHERWISE NOTED.
2. SEWER MANHOLE FRAME AND COVER SHALL BE PINKERTON NO. A-107, WEIGHT 264 LBS, OR APPROVED EQUAL. COVER SHALL BE MARKED WITH "SEWER" IN THE CENTER. (2120)
3. CONSTRUCT WATER PIPE PER TRENCH DETAIL 2/05-CD-09.
4. CAP AND ABANDON AFTER OPERATIONAL COMPLETION OF PS-A.
5. THE CONTRACTOR SHALL COMPLY WITH THE GENERAL CIVIL NOTES AND PERMITTING GENERAL NOTES.
6. CONSTRUCT GRAVITY SS PIPELINES PER TRENCH DETAIL 3/05-CD-09.
7. CONSTRUCT DUAL FM-1 AND FM-2 PIPELINES PER TRENCH DETAIL 2/05-CD-05. REFERENCE PLAN AND PROFILE DRAWINGS FOR MATERIAL SIZE AND CLASS.
8. CONNECTION TO EXISTING 30" SS SHALL NOT BE MADE UNTIL AFTER JUNE 2021 AFTER CAYUCOS IS NO LONGER CONVEYING SEWAGE TO THE EXISTING WWTP.
9. EXTEND TRACER WIRE ALONG FM2 PIPELINE TO PS-A. INSTALL TRACER WIRE TERMINAL (2060) AND GROUND ROD (16410)
10. HIGH PRIORITY UTILITY VERIFICATION REQUIRED FOR EXISTING 8" SS FROM DESAL FACILITY. 8" SS TO BE KEPT IN SERVICE DURING CONSTRUCTION.
11. HIGH PRIORITY UTILITY VERIFICATION REQUIRED FOR EXISTING DESAL MANHOLE. CONTRACTOR TO LOCATE AND EXPOSE UPPERMOST MANHOLE BARREL AND RELOCATE FM1 AND FM2 WESTWARD AS NECESSARY.
12. CONTRACTOR SHALL HOLD EXISTING UTILITY POLE DURING CONSTRUCTION.
13. HIGH PRIORITY UTILITY VERIFICATION REQUIRED FOR EXISTING 6" SS. CONTRACTOR SHALL VERIFY EXISTING SS ALIGNMENT, MH CONNECTION POINTS AND KEPT IN SERVICE. CONTRACTOR SHALL RELOCATE 12" SD AND 1" W AS NEEDED TO SATISFY 10'-0" SEPARATION FROM SS AND 4'-0" FROM SD.
14. MH CONNECTION SHALL BE MADE AFTER OPERATIONAL COMPLETION OF THE PUMP STATION.

10 0 10 20 FEET
SCALE 1"=10'

REGISTERED PROFESSIONAL ENGINEER
KRISTINA-MARIE L. ALACON
No. C70952
CIVIL
STATE OF CALIFORNIA
05/29/2020

DESIGN K. ALACON
DRAWN L. CHAPMAN
CHECKED K. ALACON
APPROVED M. FISHER

WATERWORKS ENGINEERS
2260 Douglas Blvd, Suite 105 • Roseville, CA 95661 • 916-780-2888

CITY OF MORRO BAY
WATER RECLAMATION FACILITY
LIFT STATION AND OFFSITE PIPELINES

CIVIL
PUMP STATION A YARD PIPING PLAN

DATE
MAY 2020
PROJECT NUMBER
17-082
DRAWING NUMBER
10-Y-1
SHEET NUMBER 131

L:\CADPROJECTS\17-082 MORRO BAY PS AND PIPELINE_(S)\PROJECT FILES\DELIVERABLES\1782D-10Y100.DWG

JOB NUMBER: 00-000 FILENAME: 1782D-10Y100.DWG PLOT DATE: 06/15/20 PLOT TIME: 14:38:48

CONFORMED SET - DEC 2020

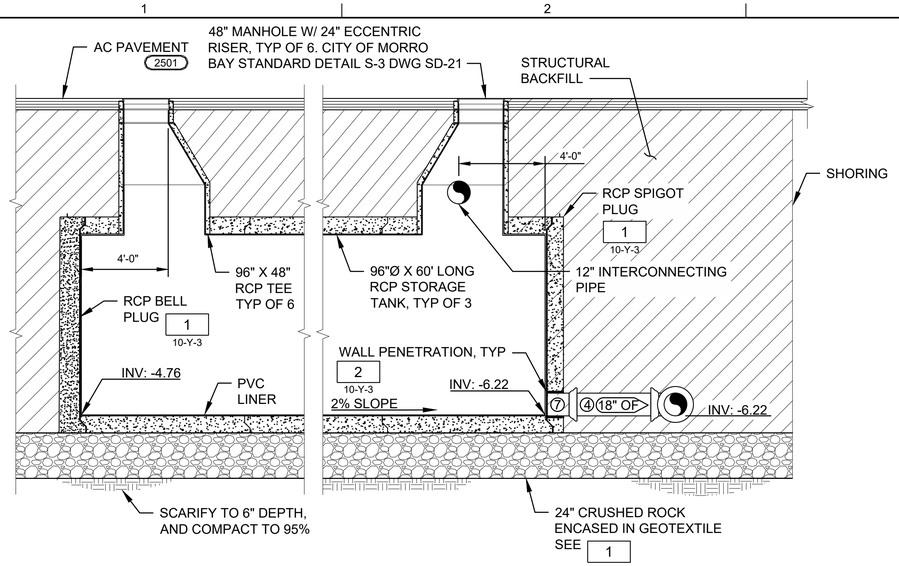

A SECTION
10-Y-1 NTS

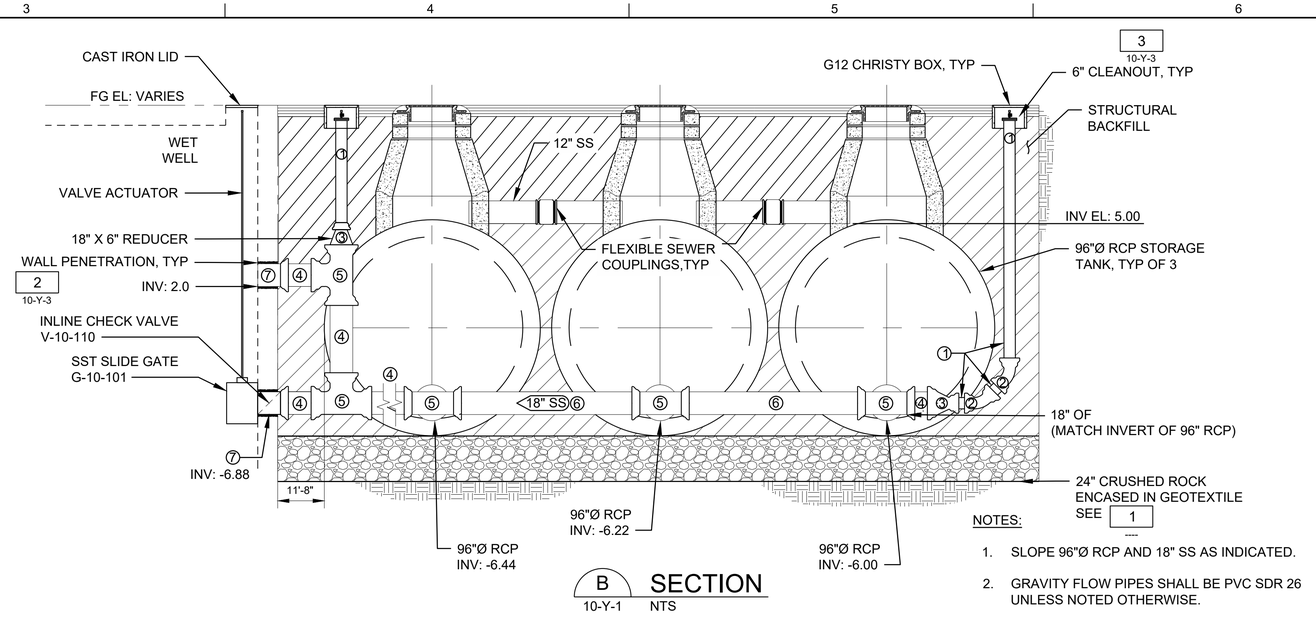

B SECTION
10-Y-1 NTS

NOTES:
1. SLOPE 96"Ø RCP AND 18" SS AS INDICATED.
2. GRAVITY FLOW PIPES SHALL BE PVC SDR 26 UNLESS NOTED OTHERWISE.

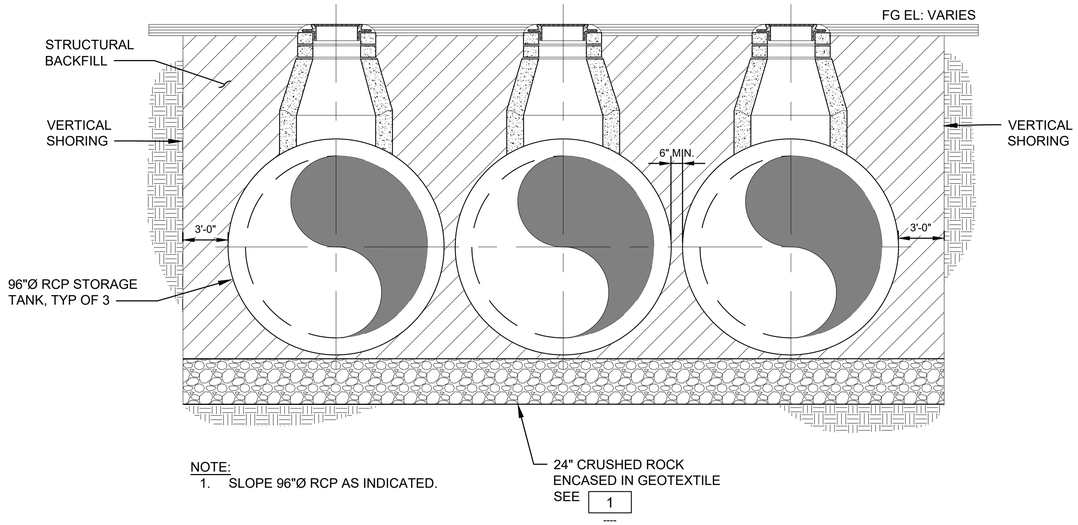

NOTE:
1. SLOPE 96"Ø RCP AS INDICATED.

C SECTION
10-Y-1 NTS

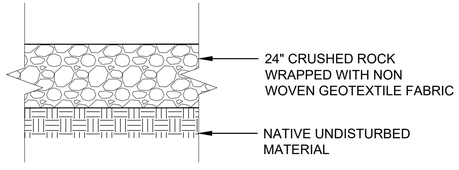

NOTE:
USE BASE STABILIZATION WHERE DIRECTED BY THE ENGINEER

1 BASE STABILIZATION DETAIL
--- NTS

KEY NOTES:

1. 8" SDR-26 PIPE, PE X PE
2. 8" SDR 26 45° ELBOW, BELL
3. 8" X 18" SDR 26 CONCENTRIC REDUCER, BELL
4. 18" SDR 26 PIPE, PE X PE
5. 18" SDR 26 TEE, BELL
6. 18" SDR 26 PIPE, PE X PE
7. 18" SDR 26 PIPE, PE X BELL



05/29/2020

DESIGN K ALACON
DRAWN P WEBSTER
CHECKED M FISHER
APPROVED M FISHER

WATERWORKS ENGINEERS
2260 Douglas Blvd, Suite 105 • Roseville, CA 95661 • 916-780-2888

CITY OF MORRO BAY
WATER RECLAMATION FACILITY
LIFT STATION AND OFFSITE PIPELINES

CIVIL
EMERGENCY STORAGE PIPING

DATE MAY 2020
PROJECT NUMBER 17-082
DRAWING NUMBER 10-Y-2
SHEET NUMBER 132

L:\CAD\PROJECTS\17-082 MORRO BAY PS AND PIPELINE_(S)\PROJECT FILES\DELIVERABLES\1782D-10Y200.DWG

JOB NUMBER: 14-010 FILENAME: 1782D-10Y200.DWG PLOT DATE: 11-Jun-20 PLOT TIME: 09:45:34

CONFORMED SET - DEC 2020

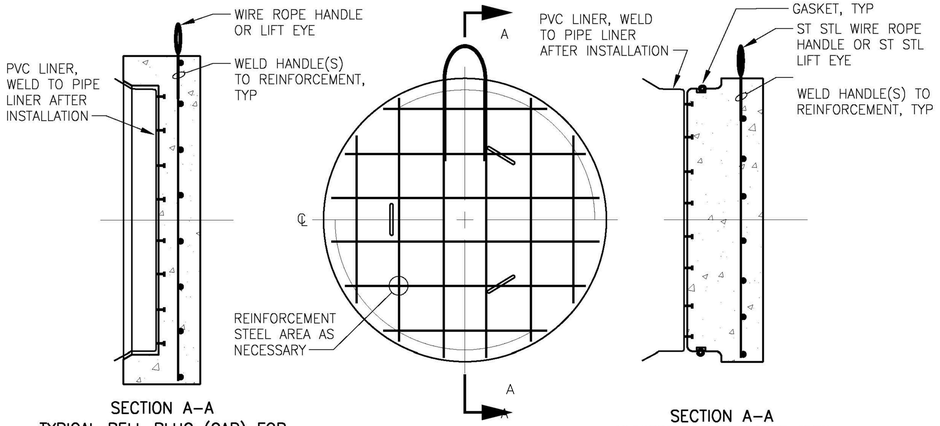

SECTION A–A
TYPICAL BELL PLUG (CAP) FOR REINFORCED CONCRETE PIPE

SECTION A–A
TYPICAL SPIGOT PLUG FOR REINFORCED CONCRETE PIPE

NOTES:
1. PLUG DESIGNED BY PIPE MANUFACTURER FOR WATER TIGHTNESS ONLY. FORCES RESULTING FROM INTERNAL PRESSURE TO BE RESISTED BY EXTERNAL CLSM AND BACKFILL UNIFORMLY DISTRIBUTED TO PREVENT MOVEMENT OR DISTORTION OF PLUG.
2. DESIGN PLUG FOR CLSM BEDDING
3. ALL STORAGE TANK PIPE JOINTS SHALL BE GASKETED

1 CONCRETE PIPE PLUGS DETAIL
10-Y-2 NTS

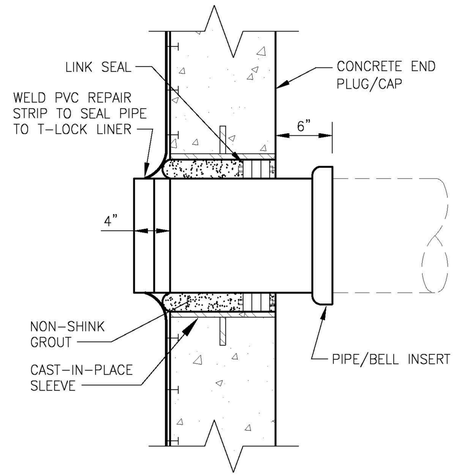

2 WALL PENETRATION DETAIL
10-Y-2 NTS

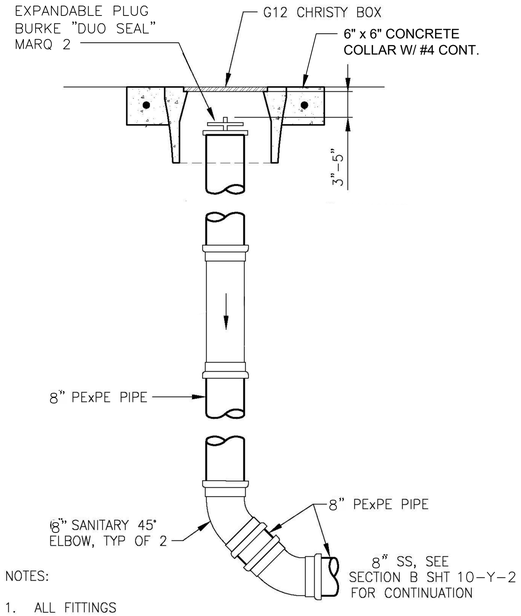

NOTES:
1. ALL FITTINGS ARE SDR 26 PVC.

3 8" FLUSHING CONNECTION DETAIL
10-Y-1 NTS

REGISTERED PROFESSIONAL ENGINEER
MICHAEL FISHER
No. C67194
CIVIL
STATE OF CALIFORNIA
05/29/2020

DESIGN K AJACON
DRAWN M TRUTT
CHECKED M FISHER
APPROVED M FISHER

WATERWORKS ENGINEERS
2260 Douglas Blvd, Suite 105 • Roseville, CA 95661 • 916-780-2888

CITY OF MORRO BAY
WATER RECLAMATION FACILITY
LIFT STATION AND OFFSITE PIPELINES

CIVIL
EMERGENCY STORAGE PIPING DETAILS

DATE MAY 2020
PROJECT NUMBER 17-082
DRAWING NUMBER 10-Y-3
SHEET NUMBER 133

L:\CAD\PROJECTS\17-082 MORRO BAY PS AND PIPELINE_{S}\PROJECT FILES\DELIVERABLES\1782D-10Y201.DWG

JOB NUMBER: 14-010 FILENAME: 1782D-10Y201.DWG PLOT DATE: 11-Jun-20 PLOT TIME: 09:46:08

CONFORMED SET - DEC 2020

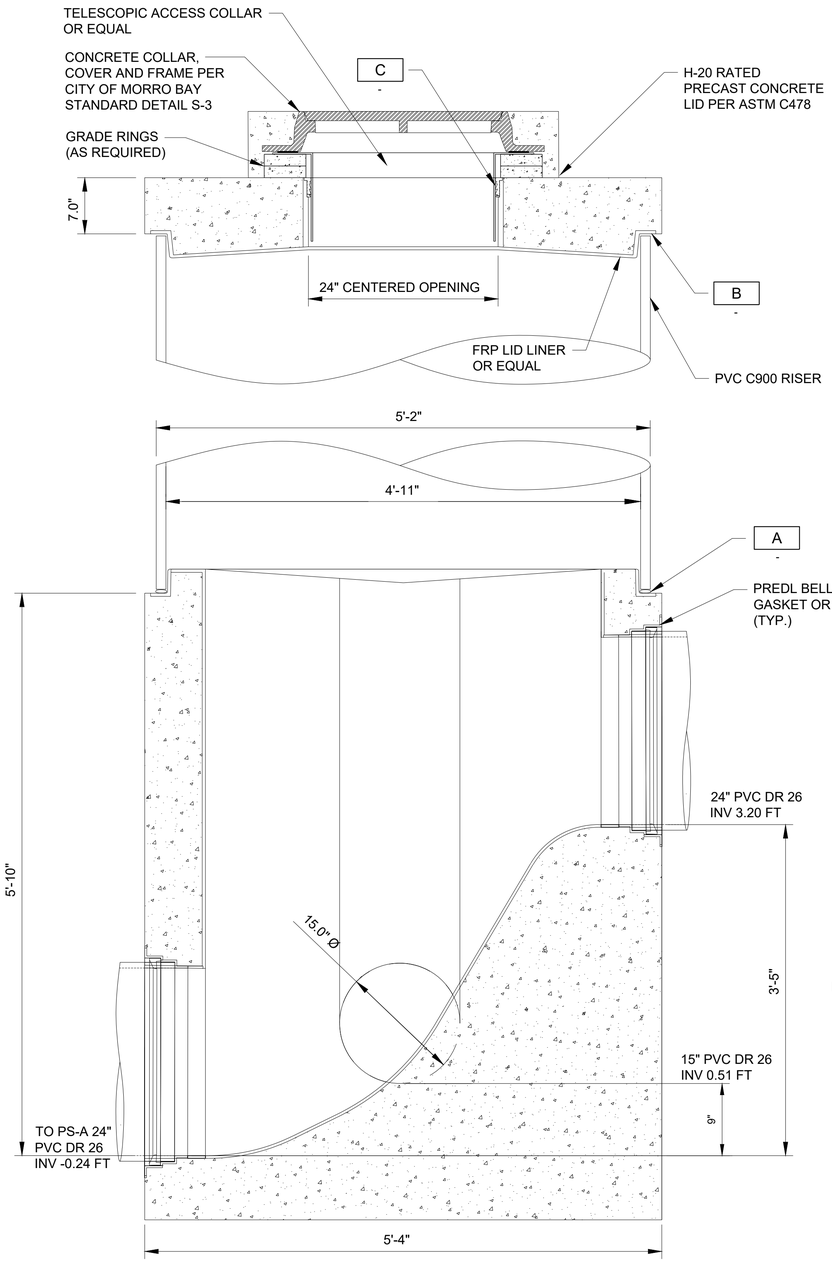

A SECTION
- 1:20

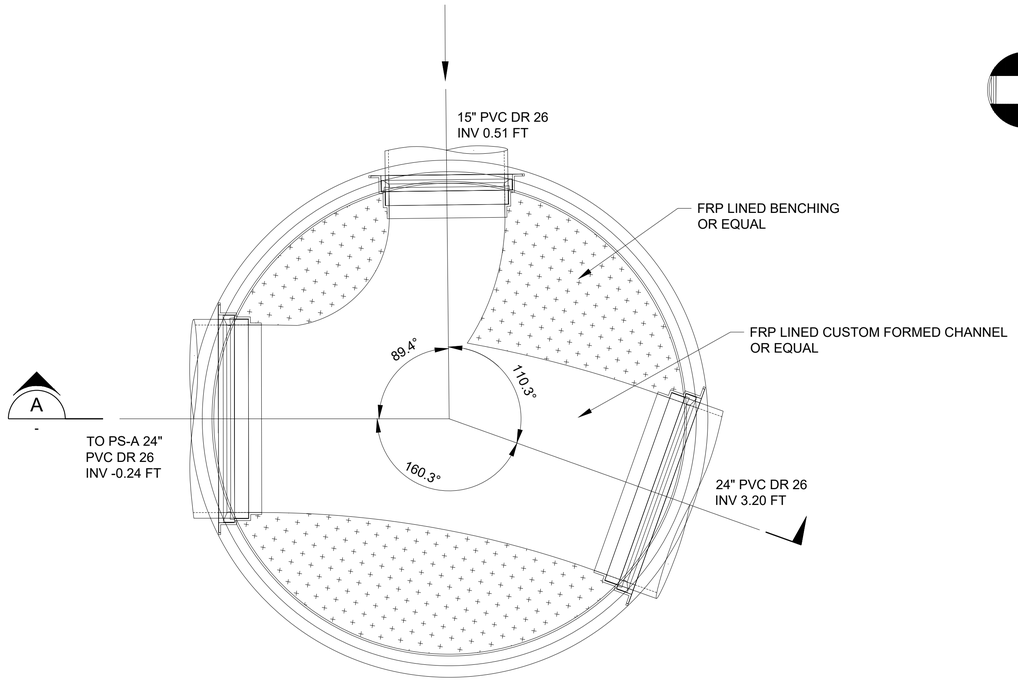

JUNCTION MANHOLE PLAN
10-Y-1

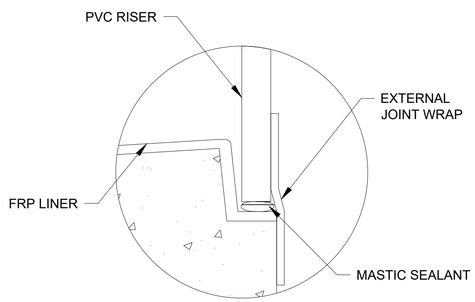

A JOINT DETAIL
- NTS

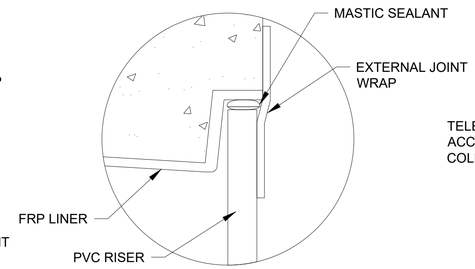

B JOINT DETAIL
- NTS

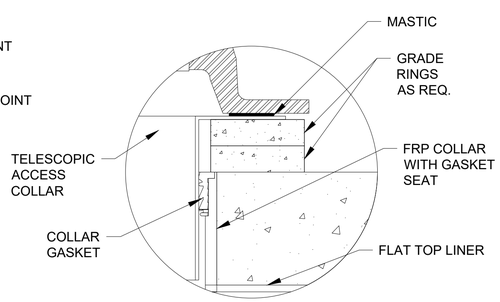

C JOINT DETAIL
- NTS



05/29/2020

DESIGN K ALACON
DRAWN K ALACON
CHECKED M FISHER
APPROVED M FISHER

WATERWORKS ENGINEERS
2260 Douglas Blvd, Suite 105 • Roseville, CA 95661 • 916-780-2888

CITY OF MORRO BAY
WATER RECLAMATION FACILITY
LIFT STATION AND OFFSITE PIPELINES

CIVIL
PS-A JUNCTION MANHOLE DETAILS

DATE MAY 2020
PROJECT NUMBER 17-082
DRAWING NUMBER 10-Y-4
SHEET NUMBER 134

L:\CAD\PROJECTS\17-082 MORRO BAY PS AND PIPELINE_{S}\PROJECT FILES\DELIVERABLES\1782D-10Y400.DWG

JOB NUMBER: 14-010 FILENAME: 1782D-10Y400.DWG PLOT DATE: 11-Jun-20 PLOT TIME: 09:46:15

CONFORMED SET - DEC 2020

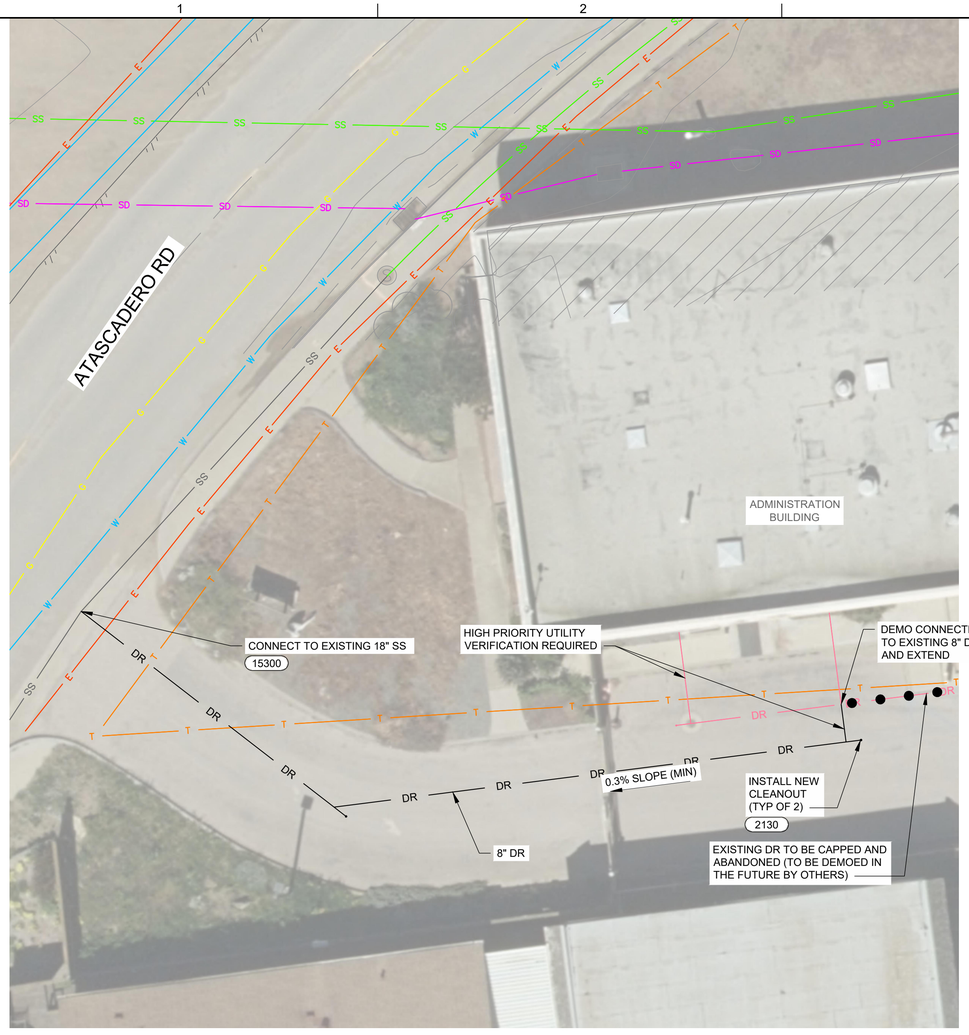

ADMINISTRATION BUILDING DRAIN PLAN
1"=10'

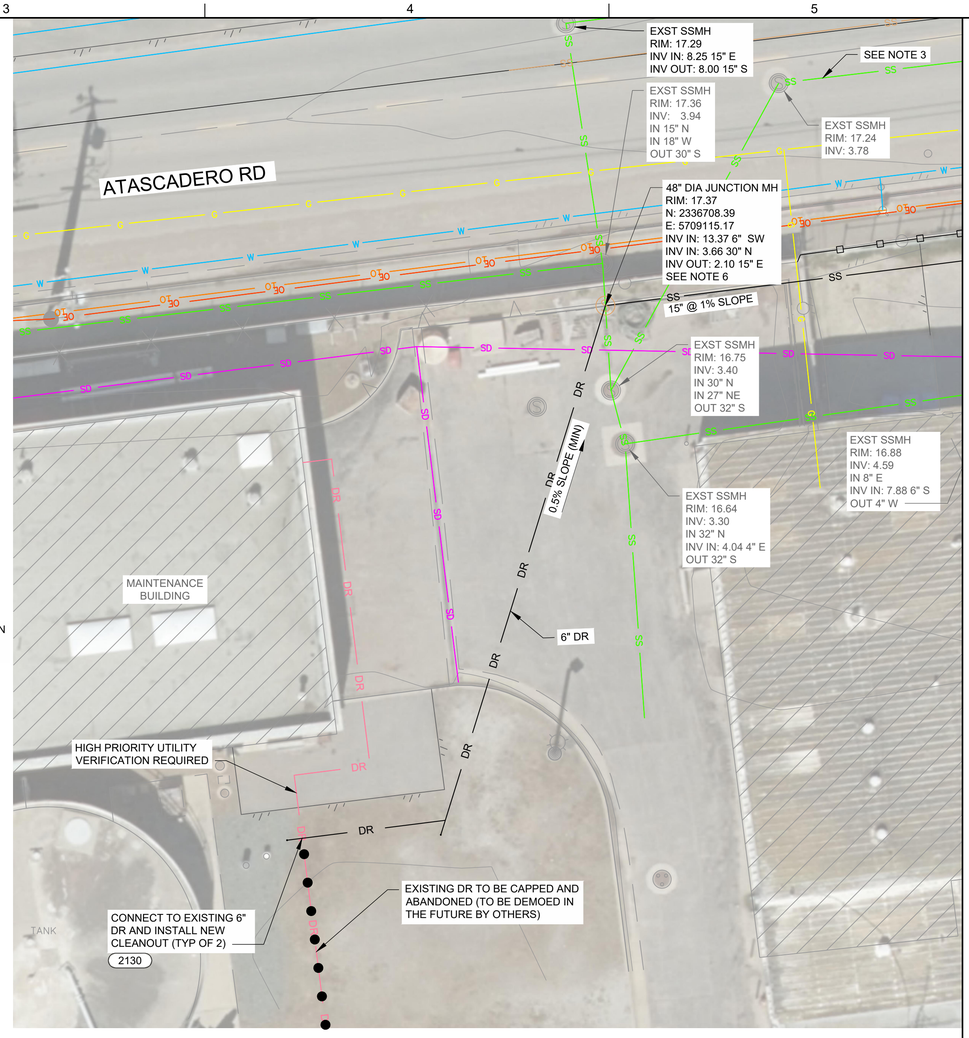

MAINTENANCE BUILDING DRAIN PLAN
1"=10'

NORTH

NOTES:

1. SEWER MANHOLES SHALL BE PER CITY OF MORRO BAY STANDARD DETAIL S-3 UNLESS OTHERWISE NOTED.
2. SEWER MANHOLE FRAME AND COVER SHALL BE PINKERTON NO. A-107, WEIGHT 264 LBS, OR APPROVED EQUAL. COVER SHALL BE MARKED WITH "SEWER" IN THE CENTER. (2120)
3. 27" SS TO BE CAPPED AND ABANDONED AFTER SUBSTANTIAL COMPLETION OF PS-A.
4. THE CONTRACTOR SHALL COMPLY WITH THE GENERAL CIVIL NOTES AND PERMITTING GENERAL NOTES.
5. CONSTRUCT DRAIN PIPELINES PER TRENCH DETAIL 3/05-CD-09.
6. CONNECTION TO EXISTING 30" SS SHALL NOT BE MADE UNTIL JUNE 2021.

10 0 10 20 FEET
SCALE 1"=10'

REGISTERED PROFESSIONAL ENGINEER
KRISTINA-MARIE R. ALACON
No. C70952
CIVIL
STATE OF CALIFORNIA
05/29/2020

DESIGN K. ALACON
DRAWN M. TRUITT
CHECKED K. ALACON
APPROVED M. FISHER

WATERWORKS ENGINEERS
2260 Douglas Blvd, Suite 105 • Roseville, CA 95661 • 916-780-2888

CITY OF MORRO BAY
WATER RECLAMATION FACILITY
LIFT STATION AND OFFSITE PIPELINES

CIVIL
PS-A YARD PIPING PLAN

DATE MAY 2020
PROJECT NUMBER 17-082
DRAWING NUMBER 10-Y-5
SHEET NUMBER 135

L:\CAD\PROJECTS\17-082 MORRO BAY PS AND PIPELINE_{S}\PROJECT FILES\DELIVERABLES\1782D-10Y500.DWG

JOB NUMBER: 00-000 FILENAME: 1782D-10Y500.DWG PLOT DATE: 06/11/20 PLOT TIME: 09:47:59

CONFORMED SET - DEC 2020

NOTES:

1. RENDERING IS FOR INFORMATIONAL PURPOSES ONLY. NOT FOR CONSTRUCTION.

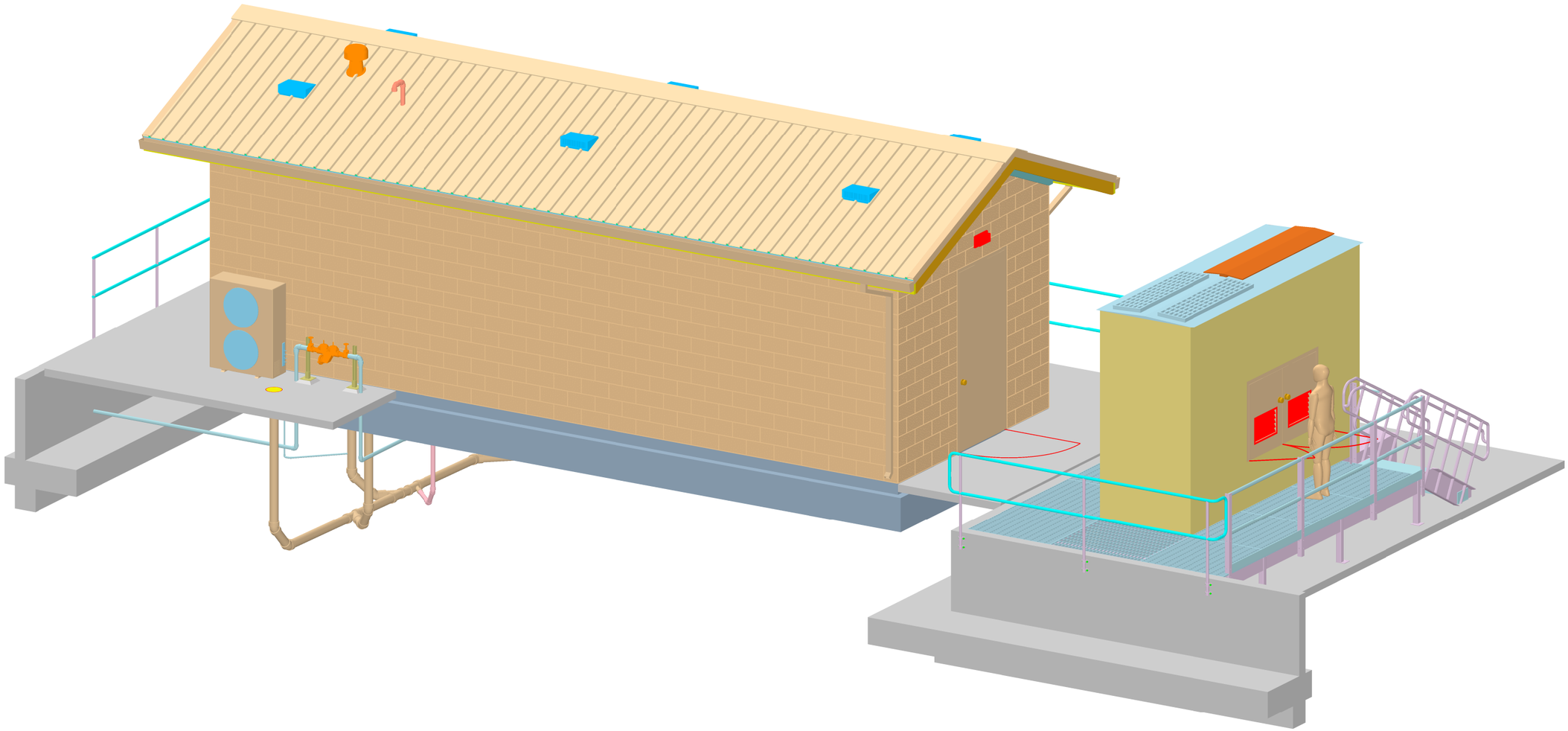

RENDERING
NTS

DESIGNED	K ALACON
DRAWN	J MARTIN
CHECKED	K ALACON
APPROVED	M FISHER

WATERWORKS ENGINEERS
2280 Douglas Blvd., Suite 105 • Roseville, CA 95661 • 916-780-2888

CITY OF MORRO BAY
WATER RECLAMATION FACILITY
LIFT STATIONS AND OFFSITE PIPELINES

RENDERING
ELECTRICAL BUILDING RENDERING

REGISTERED PROFESSIONAL ENGINEER
KRISTINA P. ALACON
No. C70952
CIVIL
STATE OF CALIFORNIA
05-29-2020

DATE	MAY 2020
PROJECT NUMBER	17-082
DRAWING NUMBER	10-R-1
SHEET NUMBER	136

FILENAME: 1782D-10R801.DGN PLOT DATE: 5/28/2020 6:23:10 AM

CONFORMED SET - DEC 2020

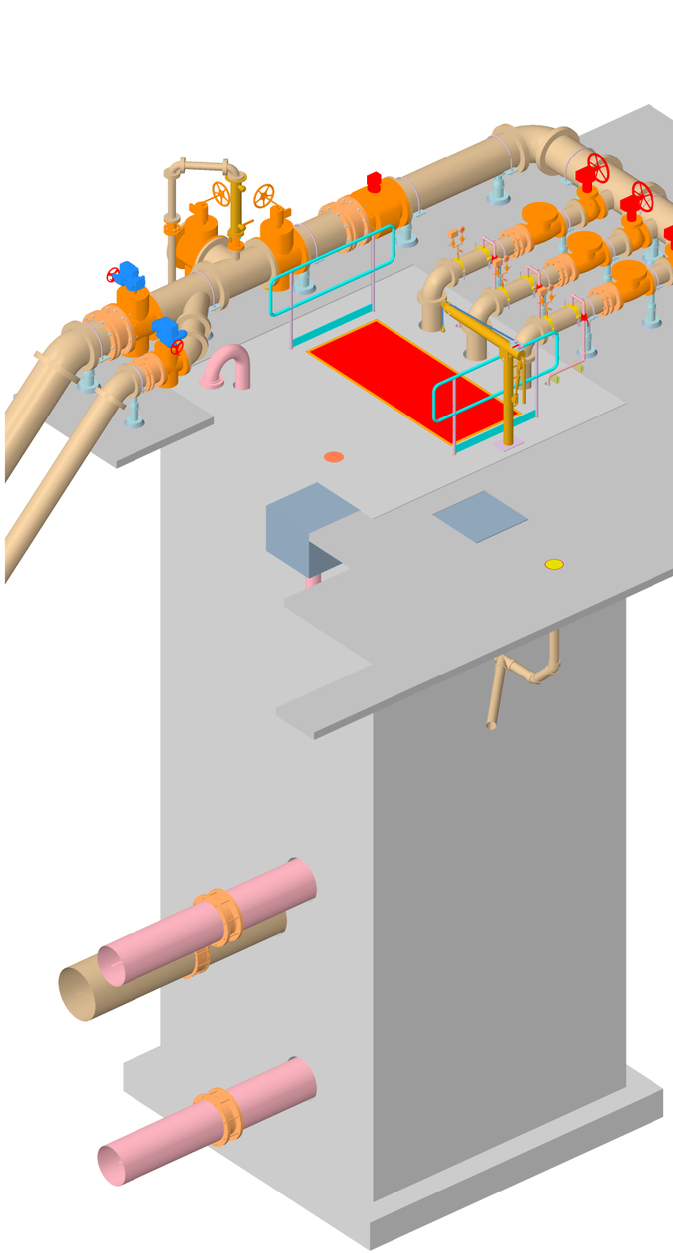

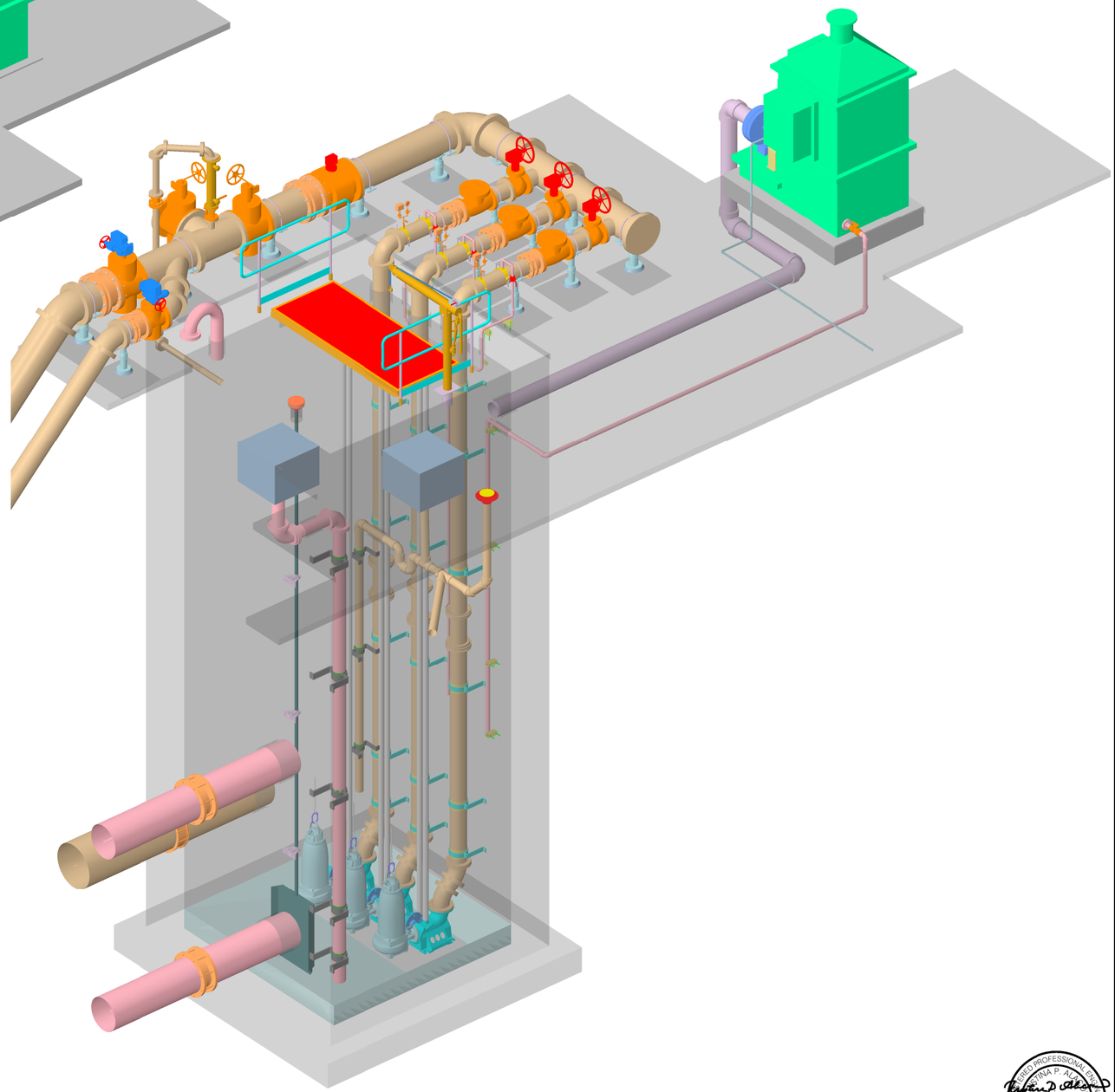

NOTES:

1. RENDERINGS ARE FOR INFORMATIONAL PURPOSES ONLY. NOT FOR CONSTRUCTION.

RENDERINGS

NTS

DESIGNED K ALACON
DRAWN J MARTIN
CHECKED K ALACON
APPROVED M FISHER

WATERWORKS ENGINEERS
2290 Douglas Blvd., Suite 105 • Roseville, CA 95661 • 916-780-2888

CITY OF MORRO BAY
WATER RECLAMATION FACILITY
LIFT STATIONS AND OFFSITE PIPELINES

RENDERING
PUMP STATION A RENDERINGS

REGISTERED PROFESSIONAL ENGINEER
KRISTINA P. ALACON
No. C70952
CIVIL
STATE OF CALIFORNIA
05-29-2020

DATE MAY 2020
PROJECT NUMBER 17-082
DRAWING NUMBER 10-R-2
SHEET NUMBER 137

FILENAME: 1782D-10R802.DGN PLOT DATE: 5/28/2020 6:25:19 AM

CONFORMED SET - DEC 2020

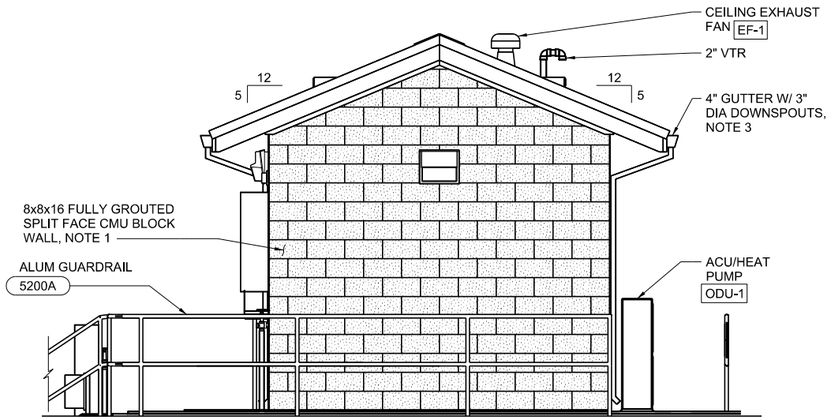

A NORTH ELEVATION
3/8" = 1'-0"
10-AS-2

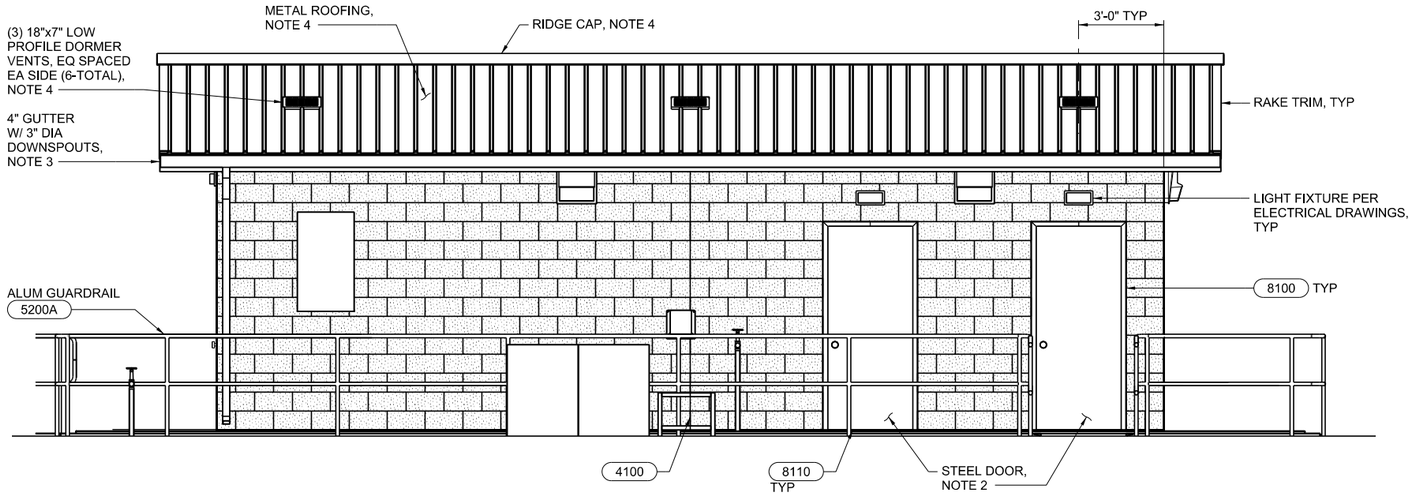

B EAST ELEVATION
3/8" = 1'-0"
10-AS-2

NOTES:

1. COLOR TO MATCH EXISTING FACILITIES, ANGELUS "HARVEST" SPLIT FACE CMU BLOCK, OR EQUAL. SUBMIT COLOR SAMPLE TO OWNER FOR APPROVAL PRIOR TO CONSTRUCTION.
2. STEEL DOOR COLOR TO MATCH EXISTING FACILITIES, DARK BROWN. SUBMIT COLOR SAMPLE TO OWNER FOR APPROVAL PRIOR TO CONSTRUCTION.
3. PAINT GUTTERS AND DOWNSPOUTS DARK BROWN TO MATCH STEEL DOORS AND METAL ROOFING.
4. METAL ROOFING, RIDGE CAP, FLASHING, ETC TO MATCH EXISTING FACILITIES, DARK BROWN. SUBMIT COLOR SAMPLE TO OWNER FOR APPROVAL PRIOR TO CONSTRUCTION.

BUILDING CODE DATA	
BUILDING CODE	2016 CBC
OCCUPANCY CLASSIFICATION	F-1
HAZARDOUS MATERIALS	NONE
TYPE OF CONSTRUCTION	V-B
FIRE SUPRESSION	FIRE EXTINGUISHERS
NUMBER OF STORIES ABOVE GRADE	1 ACTUAL 1 ALLOWABLE (F-1 OCCUPANCY)
BUILDING HEIGHT ABOVE GRADE	13'-2" ACTUAL 40'-0" ALLOWABLE
BUILDING AREAS	341 SQFT
OCCUPANT LOAD FACTOR	100 SQFT/PERSON
OCCUPANT LOAD	3 PERSONS
TRAVEL DISTANCE	16'-8" MAX ACTUAL 175'-0" ALLOWABLE

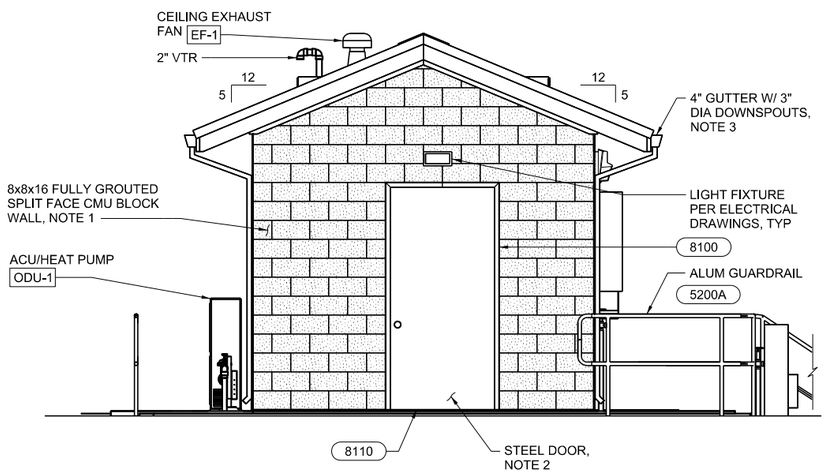

C SOUTH ELEVATION
3/8" = 1'-0"
10-AS-2

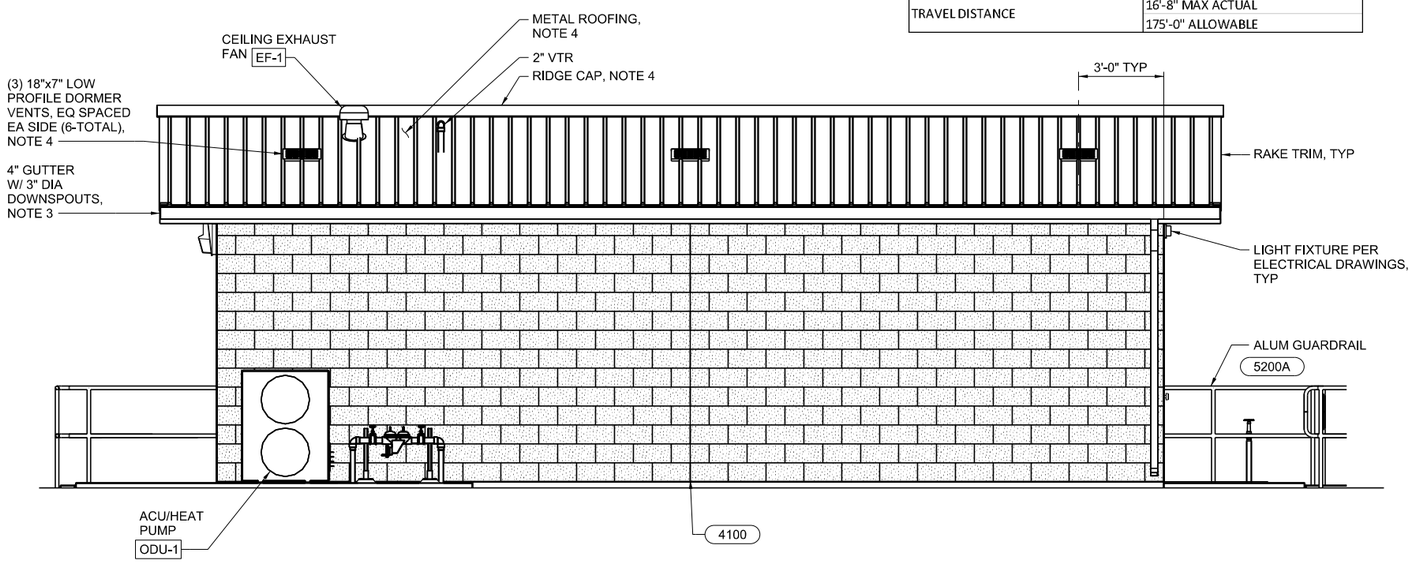

D WEST ELEVATION
3/8" = 1'-0"
10-AS-2

2 0 2 4 FEET
SCALE 1/2"=1'-0"

DESIGNED A LINDEMAN
DRAWN J MARTIN
CHECKED J KELLOGG
APPROVED M FISHER

WATERWORKS ENGINEERS
2290 Douglas Blvd., Suite 105 • Roseville, CA 95661 • 916-780-2888

CITY OF MORRO BAY
WATER RECLAMATION FACILITY
LIFT STATIONS AND OFFSITE PIPELINES

ARCHITECTURAL / STRUCTURAL

PUMP STATION A ELECTRICAL BUILDING ELEVATIONS

REGISTERED PROFESSIONAL ENGINEER
ANDREW L. LINDEMAN
No. C88058
CIVIL
STATE OF CALIFORNIA
05-29-2020

DATE	MAY 2020
PROJECT NUMBER	17-082
DRAWING NUMBER	10-AS-1
SHEET NUMBER	138

FILENAME: 1782D-10AS401.DGN PLOT DATE: 5/28/2020 6:36:19 AM

CONFORMED SET - DEC 2020

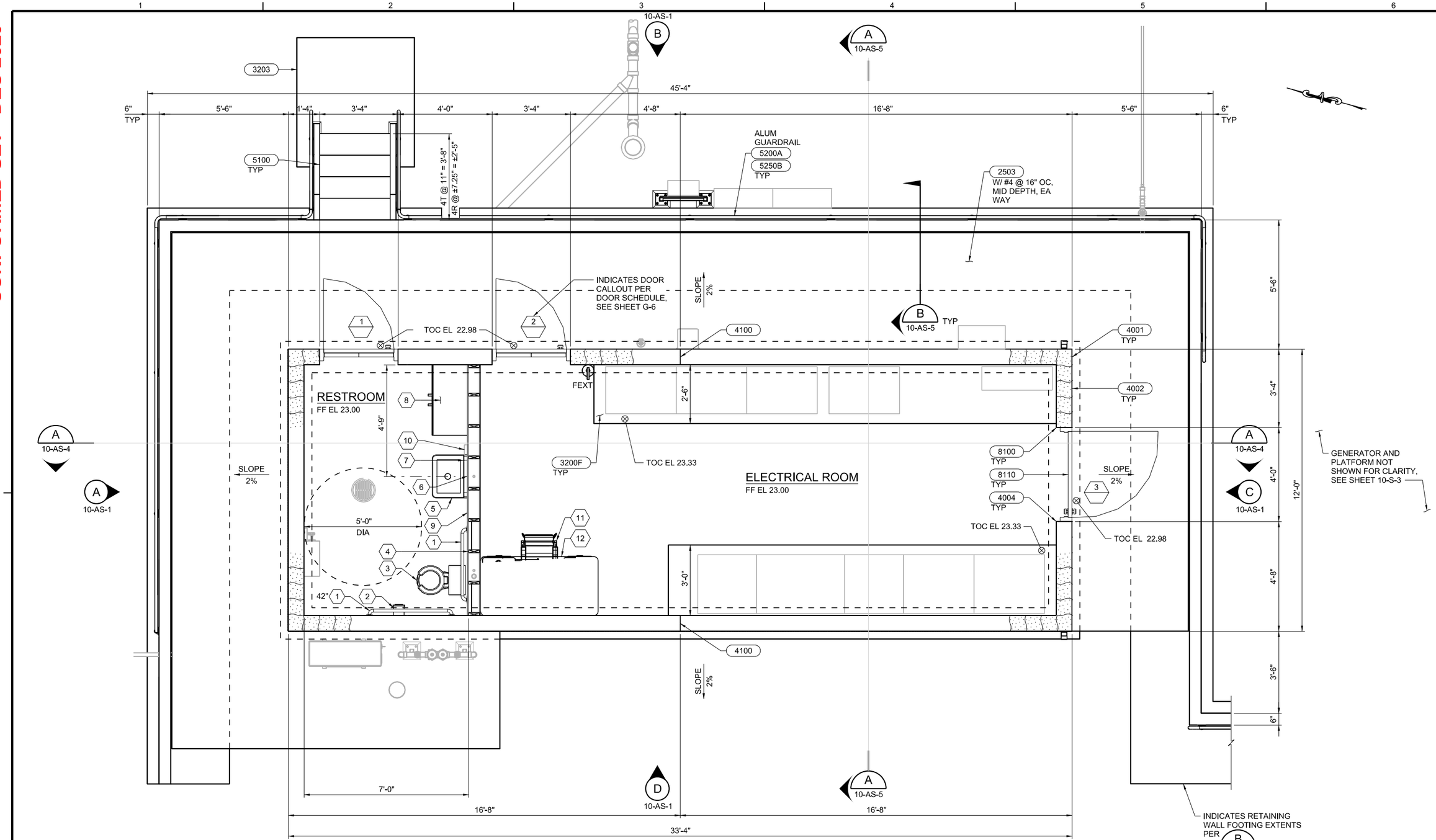

FURNISHINGS SCHEDULE

1	GRAB BAR, PROVIDE BLOCKING IN WOOD FRAMING WALL	5	UTILITY SINK US-01	9	SOAP DISPENSER RA-03	NOTES: FOR ADDITIONAL FURNISHING REQUIREMENTS, SEE DETAIL 10100.
2	TOILET PAPER DISPENSER RA-02	6	MIRROR, 24"x36"	10	INSTANT WATER HEATER IHW-01	
3	FLOOR MOUNTED WATER CLOSET WC-01	7	PAPER TOWEL DISPENSER RA-01	11	CHAIR	
4	SEAT COVER DISPENSER	8	STORAGE CABINET SC-01	12	DESK, 60"x30"	

PUMP STATION A ELECTRICAL BUILDING FLOOR PLAN

1/2" = 1'-0"

2 0 2 4 FEET
SCALE 1/2"=1'-0"

DESIGNED A LINDEMAN
DRAWN J MARTIN
CHECKED J KELLOGG
APPROVED M FISHER

WATERWORKS ENGINEERS
2290 Douglas Blvd., Suite 105 • Roseville, CA 95661 • 916-780-2888

CITY OF MORRO BAY
WATER RECLAMATION FACILITY
LIFT STATIONS AND OFFSITE PIPELINES

ARCHITECTURAL / STRUCTURAL
PUMP STATION A ELECTRICAL BUILDING PLAN

REGISTERED PROFESSIONAL ENGINEER
ANDREW L. LINDEMAN
No. C88058
CIVIL
STATE OF CALIFORNIA
05-29-2020

DATE MAY 2020
PROJECT NUMBER 17-082
DRAWING NUMBER 10-AS-2
SHEET NUMBER 139

FILENAME: 1782D-10AS101.DGN PLOT DATE: 5/28/2020 6:31:02 AM

CONFORMED SET - DEC 2020

NOTES:

1. 19/32 PLYWD SHTG, CDX APA RATED EXPOSURE 1. NAIL DIAPH WITH 10d @ 6" OC AT ALL SUPPORTED PANEL EDGES AND DIAPH BOUNDARY, 12" OC IN FIELD. UNBLOCKED.
2. PROVIDE 2x6 TOP CHORD AT WOOD TRUSSES. SEE SECTION 06100 FOR DESIGN CRITERIA AND SUBMITTAL REQUIRMENTS.

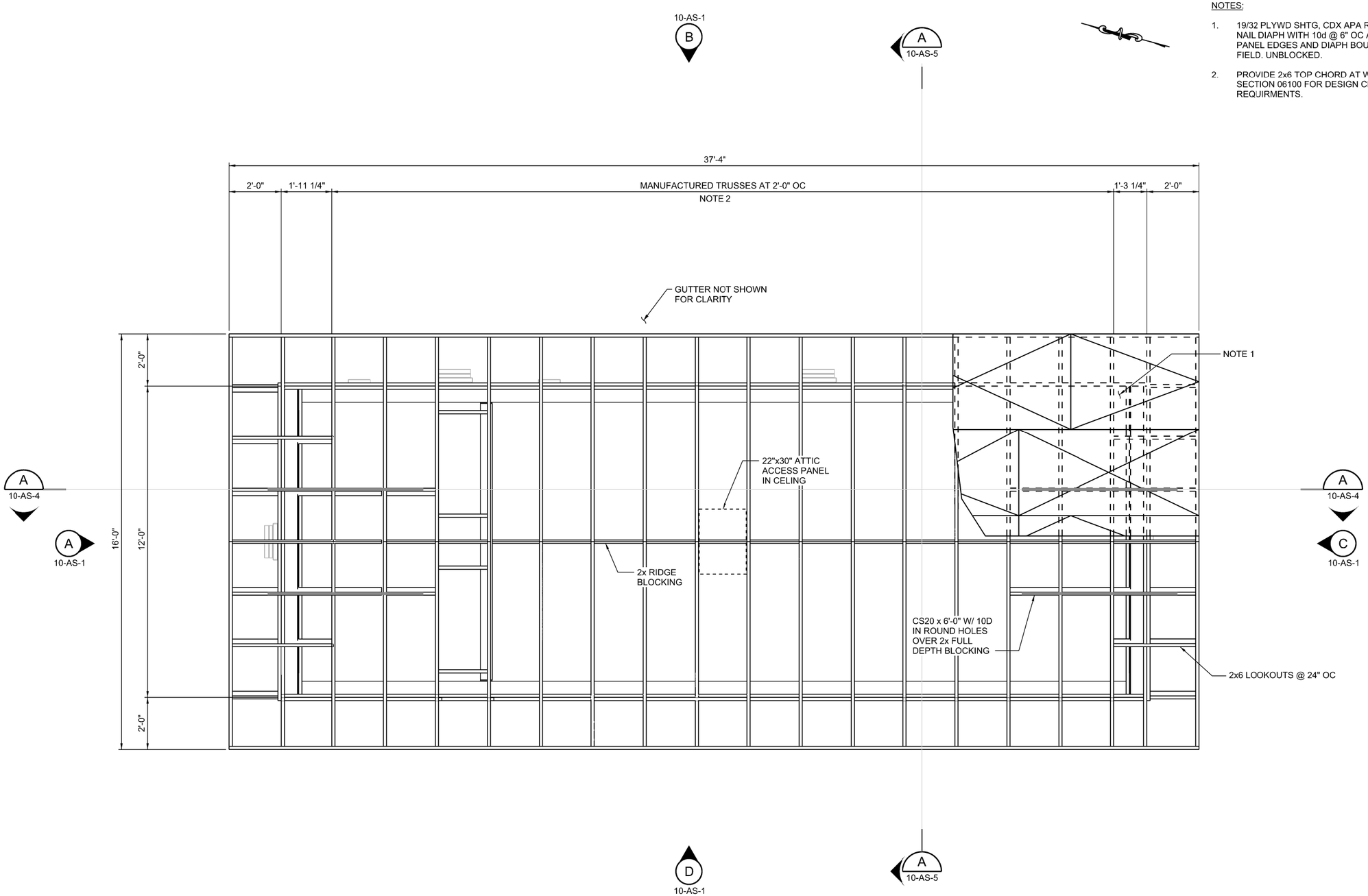

ROOF FRAMING PLAN

1/2" = 1'-0"

2 0 2 4 FEET

SCALE 1/2"=1'-0"

DESIGNED A LINDEMAN
DRAWN J MARTIN
CHECKED J KELLOGG
APPROVED M FISHER

WATERWORKS ENGINEERS
2280 Douglas Blvd., Suite 105 • Roseville, CA 95661 • 916-780-2888

CITY OF MORRO BAY
WATER RECLAMATION FACILITY
LIFT STATIONS AND OFFSITE PIPELINES

ARCHITECTURAL / STRUCTURAL

PUMP STATION A
ELECTRICAL BUILDING
ROOF FRAMING PLAN

REGISTERED PROFESSIONAL ENGINEER
ANDREW L. LINDEMAN
No. C88058
CIVIL
STATE OF CALIFORNIA
05-29-2020

DATE MAY 2020
PROJECT NUMBER 17-082
DRAWING NUMBER 10-AS-3
SHEET NUMBER 140

FILENAME: 1782D-10AS102.DGN PLOT DATE: 5/28/2020 7:24:46 AM

CONFORMED SET - DEC 2020

NOTES:

1. INSTALL EDGE TRIM WHERE GYPSUM WALL BOARD ABUTS ANOTHER MATERIAL AT WALLS AND CEILING. PROVIDE JOINT SEALANT BETWEEN TRIM AND OTHER MATERIAL PRIOR TO PAINTING.
2. FASTEN GYPSUM WALL BOARD TO 2x STUDS W/ NO. 6x1 1/4" TYPE S OR W DRYWALL SCREWS @ 12" OC @ PANEL EDGES & 16" OC IN FIELD, UNBLOCKED.

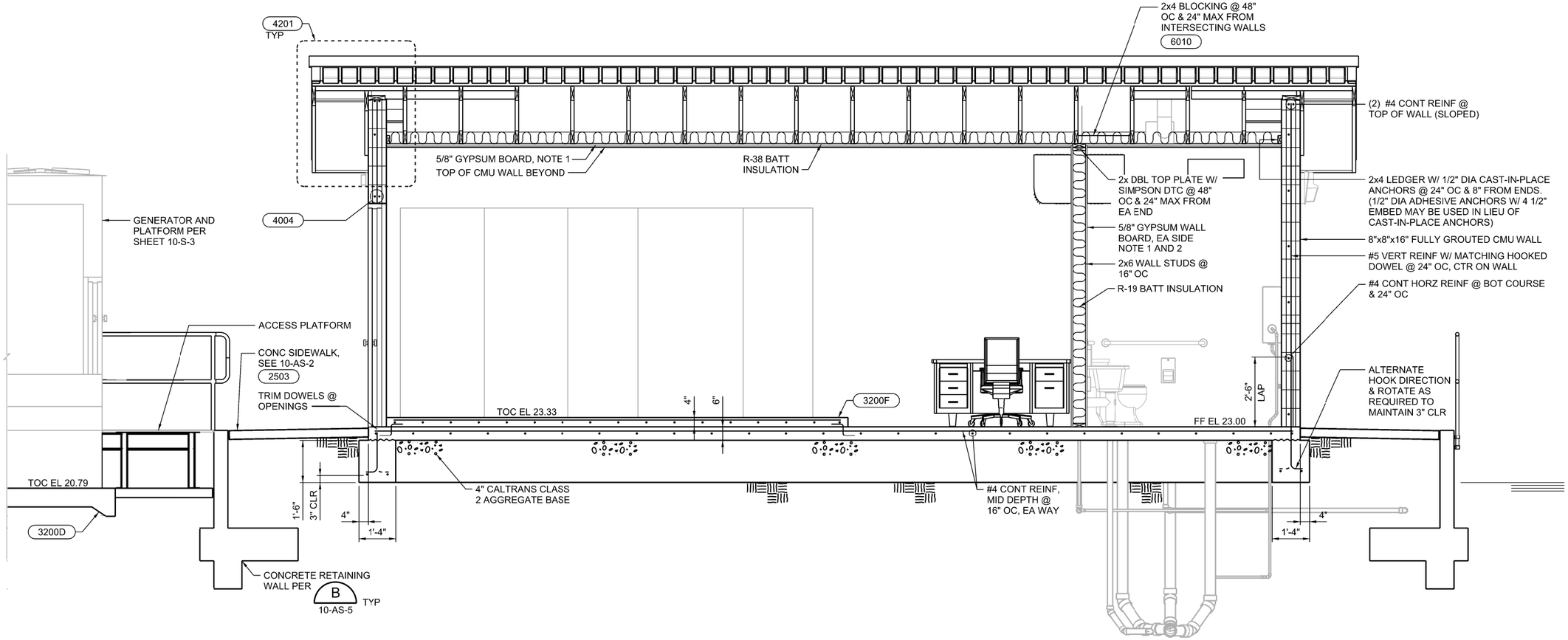

A SECTION
10-AS-2
10-AS-3
1/2" = 1'-0"

2 0 2 4 FEET
SCALE 1/2"=1'-0"

DESIGNED A LINDEMAN
DRAWN J MARTIN
CHECKED J KELLOGG
APPROVED M FISHER

WATERWORKS ENGINEERS
2290 Douglas Blvd., Suite 105 • Roseville, CA 95661 • 916-780-2888

CITY OF MORRO BAY
WATER RECLAMATION FACILITY
LIFT STATIONS AND OFFSITE PIPELINES

ARCHITECTURAL / STRUCTURAL
PUMP STATION A
ELECTRICAL BUILDING
SECTION

REGISTERED PROFESSIONAL ENGINEER
ANDREW L. LINDEMAN
No. C88058
CIVIL
STATE OF CALIFORNIA
05-29-2020

DATE
MAY 2020
PROJECT NUMBER
17-082
DRAWING NUMBER
10-AS-4
SHEET NUMBER 141

FILENAME: 1782D-10AS201.DGN PLOT DATE: 5/28/2020 7:05:32 AM

CONFORMED SET - DEC 2020

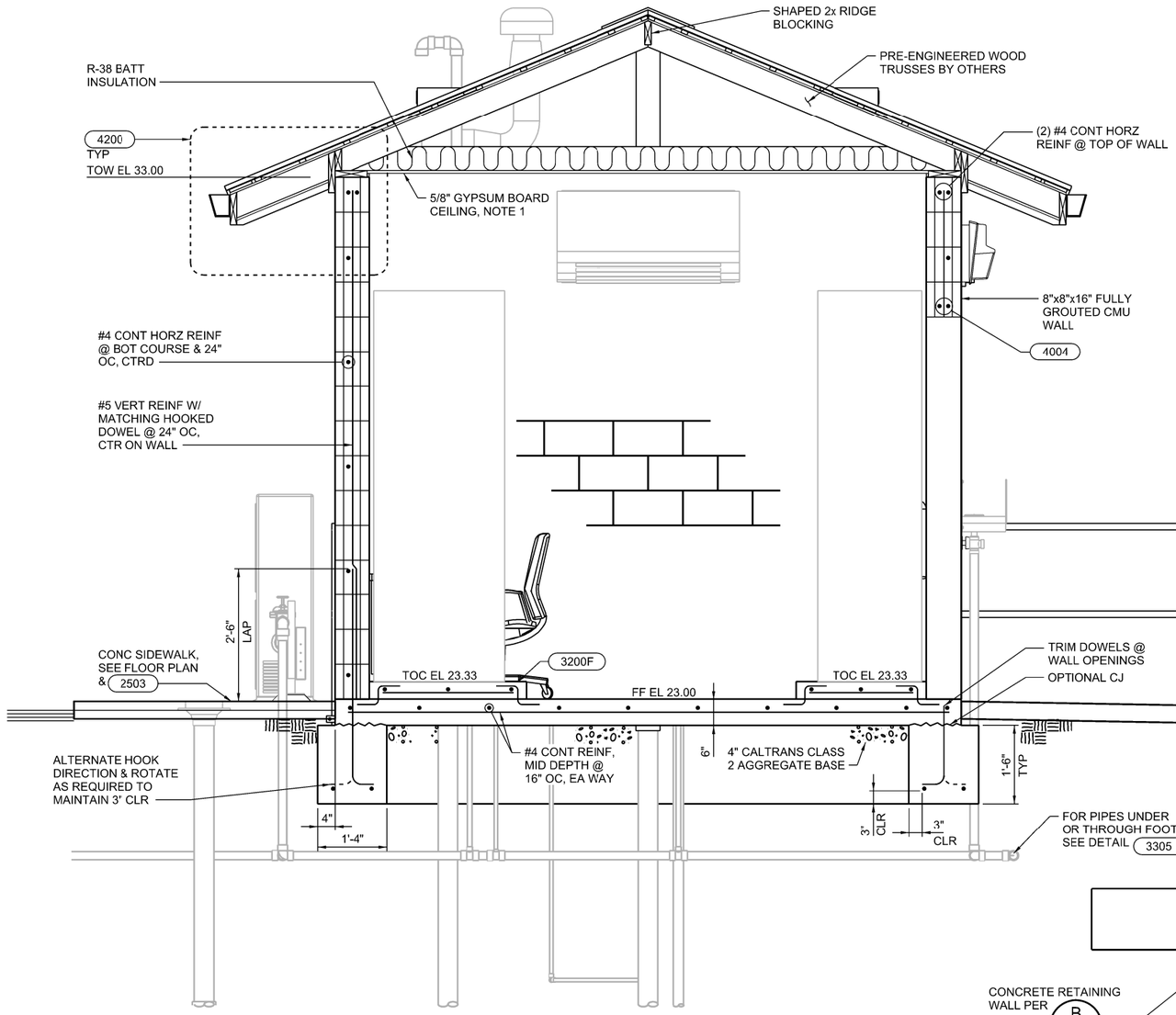

A SECTION
10-AS-2 3/4" = 1'-0"

NOTES:

1. INSTALL EDGE TRIM WHERE GYPSUM WALL BOARD ABUTS ANOTHER MATERIAL AT WALLS AND CELING. PROVIDE JOINT SEALANT BETWEEN TRIM AND OTHER MATERIAL PRIOR TO PAINTING.

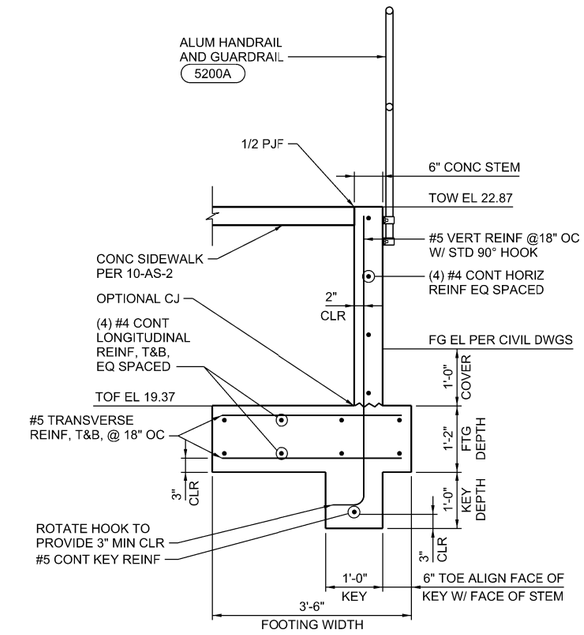

B SECTION
--- 3/4" = 1'-0"
10-AS-2
10-AS-4
10-C-2

1 0 1 2 FEET
SCALE 3/4"=1'-0"

DESIGNED A LINDEMAN
DRAWN J MARTIN
CHECKED J KELLOGG
APPROVED M FISHER

WATERWORKS ENGINEERS
2290 Douglas Blvd., Suite 105 • Roseville, CA 95661 • 916-780-2888

CITY OF MORRO BAY
WATER RECLAMATION FACILITY
LIFT STATIONS AND OFFSITE PIPELINES

ARCHITECTURAL / STRUCTURAL

PUMP STATION A ELECTRICAL BUILDING SECTIONS

REGISTERED PROFESSIONAL ENGINEER
ANDREW L. LINDEMAN
No. C88058
CIVIL
STATE OF CALIFORNIA
05-29-2020

DATE MAY 2020
PROJECT NUMBER 17-082
DRAWING NUMBER 10-AS-5
SHEET NUMBER 142

FILENAME: 1782D-10AS202.DGN PLOT DATE: 5/28/2020 7:14:17 AM

CONFORMED SET - DEC 2020

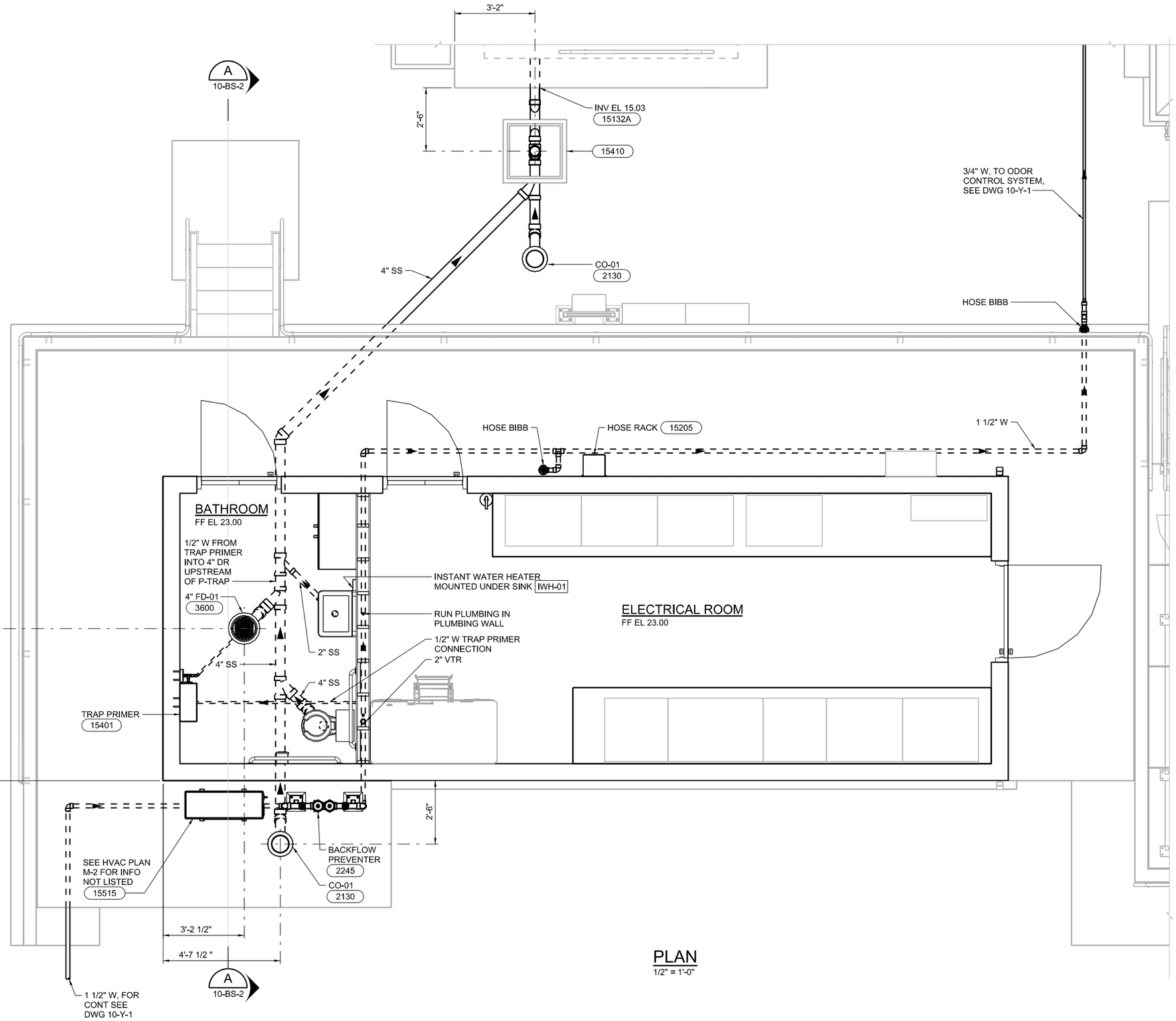

PLAN
1/2" = 1'-0"

2 0 2 4 FEET
SCALE 1/2"=1'-0"

DESIGNED K ALACON
DRAWN J MARTIN
CHECKED K ALACON
APPROVED M FISHER

WATERWORKS ENGINEERS
2280 Douglas Blvd., Suite 105 • Roseville, CA 95661 • 916-780-2888

CITY OF MORRO BAY
WATER RECLAMATION FACILITY
LIFT STATIONS AND OFFSITE PIPELINES

BUILDING SERVICES
PUMP STATION A
PLAN

REGISTERED PROFESSIONAL ENGINEER
KRISTINA P. ALACON
No. C70952
CIVIL
STATE OF CALIFORNIA
05-29-2020

DATE
MAY 2020
PROJECT NUMBER
17-082
DRAWING NUMBER
10-BS-1
SHEET NUMBER 143

FILENAME: 1782D-10BS101.DGN PLOT DATE: 5/28/2020 7:00:53 AM

CONFORMED SET - DEC 2020

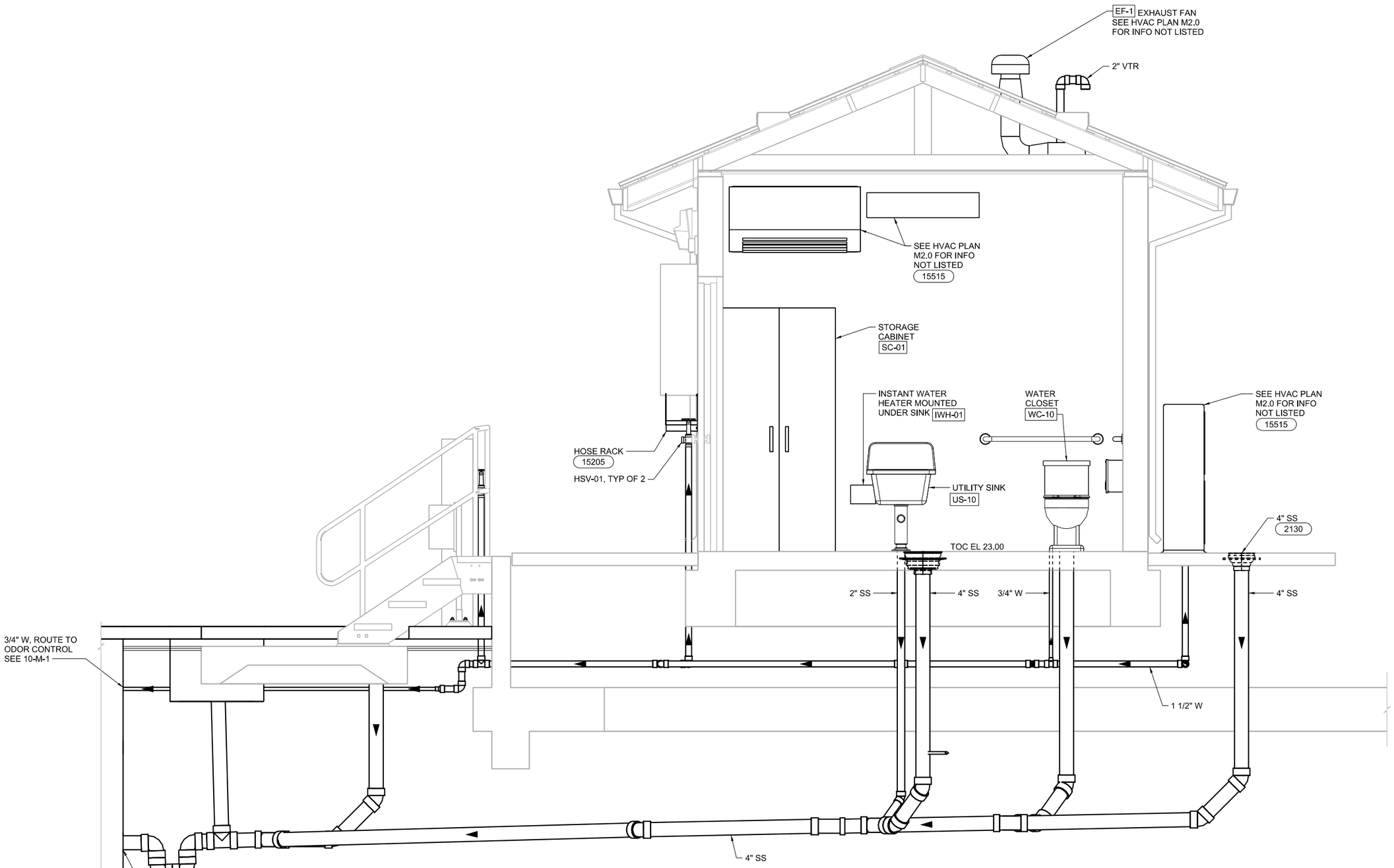

A SECTION
10-BS-1 3/4" = 1'-0"

1 0 1 2 FEET
SCALE 3/4"=1'-0"

REGISTERED PROFESSIONAL ENGINEER
KRISTINA P. ALACON
No. C70952
CIVIL
STATE OF CALIFORNIA
05-29-2020

DESIGNED K ALACON
DRAWN J MARTIN
CHECKED K ALACON
APPROVED M FISHER

WATERWORKS ENGINEERS
2290 Douglas Blvd., Suite 105 • Roseville, CA 95661 • 916-780-2888

CITY OF MORRO BAY
WATER RECLAMATION FACILITY
LIFT STATIONS AND OFFSITE PIPELINES

BUILDING SERVICES
PUMP STATION A SECTION

DATE MAY 2020
PROJECT NUMBER 17-082
DRAWING NUMBER 10-BS-2
SHEET NUMBER 144

FILENAME: 1782D-10BS201.DGN PLOT DATE: 5/28/2020 6:40:54 AM

CONFORMED SET - DEC 2020

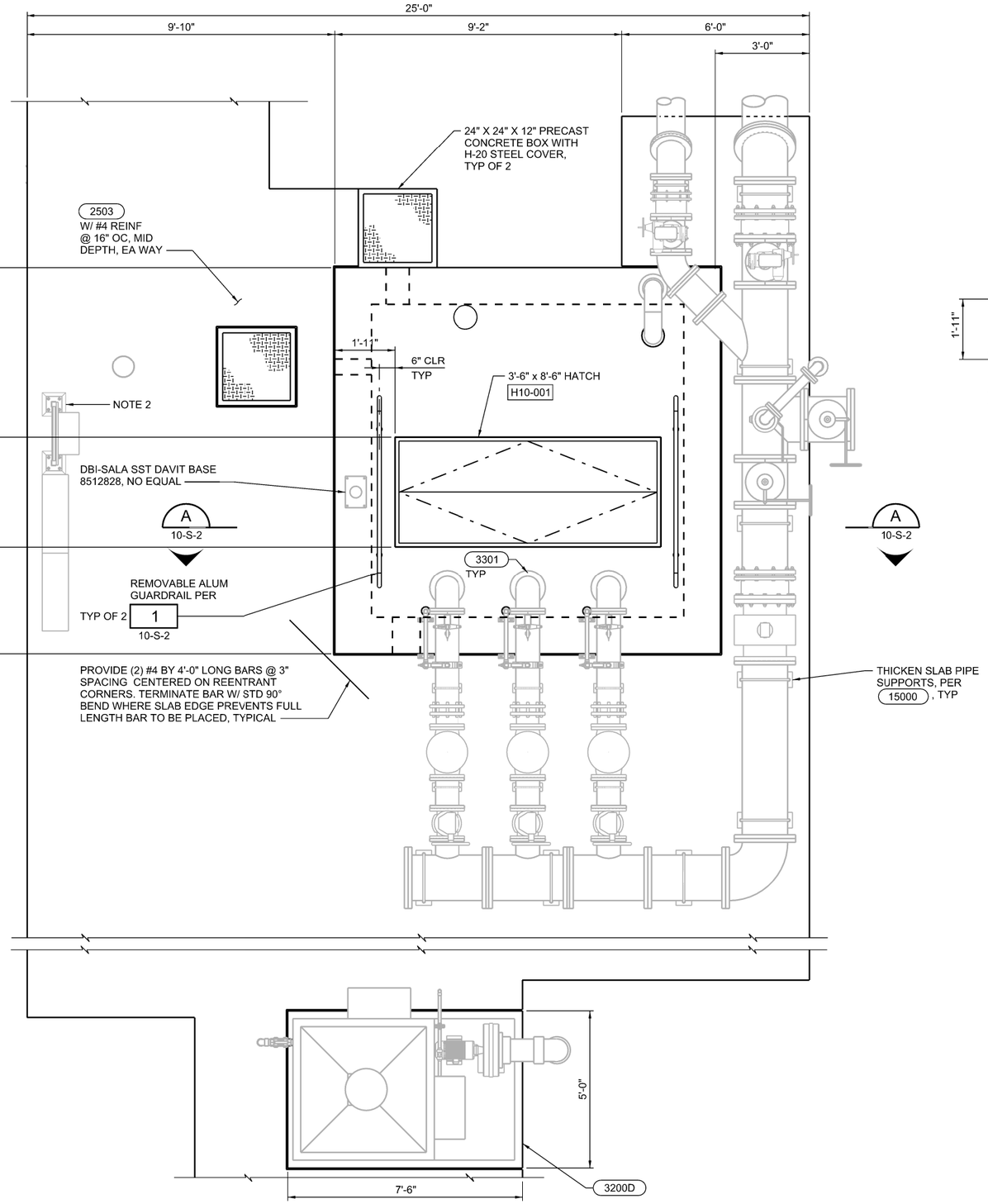

TOP PLAN
1/2" = 1'-0"

NOTES:

1. PUMP STATION DESIGN IS BASED ON FLYGT PUMPS LISTED IN SPECIFICATION SECTION 11300.
2. THICKEN SLAB UNDER ELECTRICAL EQUIPMENT PER 15000 SIM, TYP.

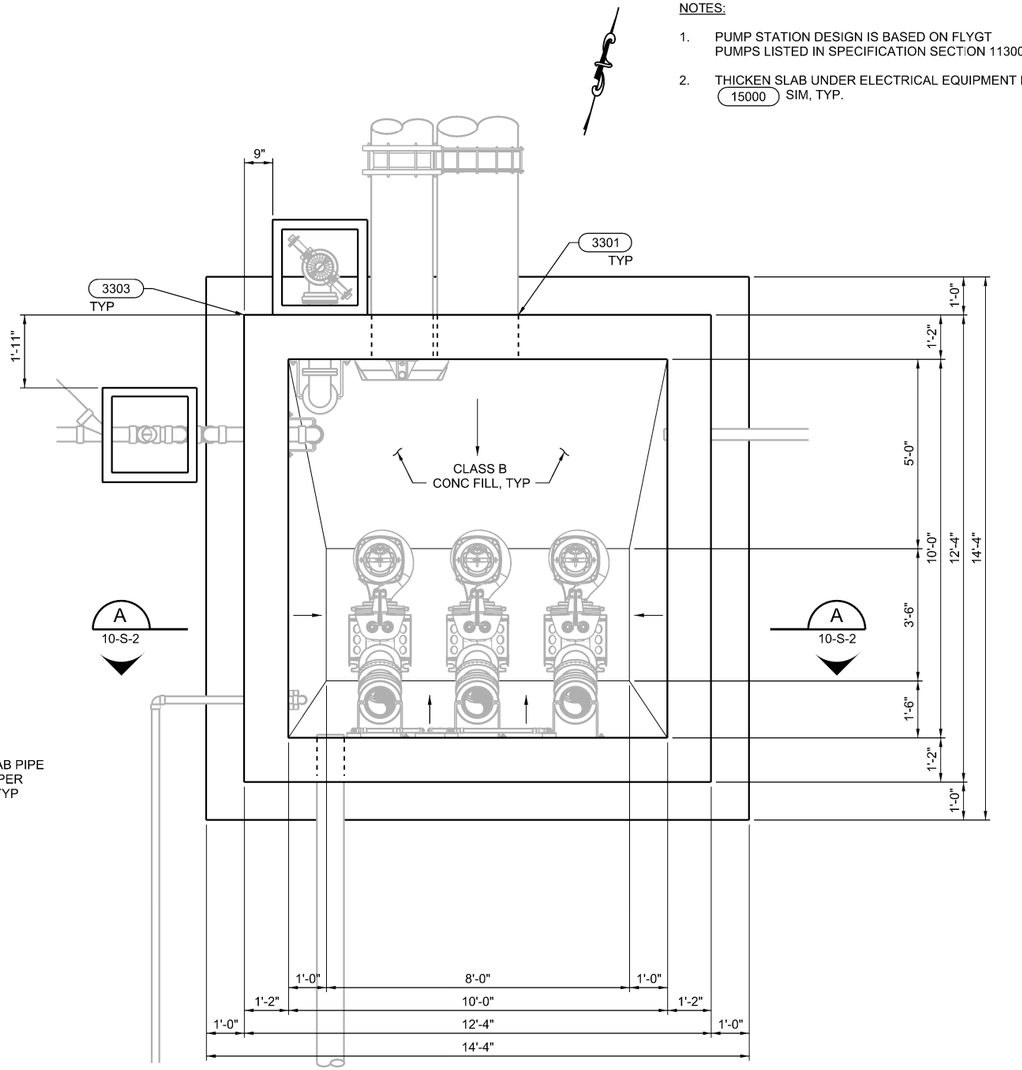

LOWER PLAN
1/2" = 1'-0"

2 0 2 4 FEET
SCALE 1/2"=1'-0"

REGISTERED PROFESSIONAL ENGINEER ANDREW L. LINDEMAN No. C88058 CIVIL STATE OF CALIFORNIA
05-29-2020

DESIGNED A LINDEMAN
DRAWN J MARTIN
CHECKED J KELLOGG
APPROVED M FISHER

WATERWORKS ENGINEERS
2290 Douglas Blvd., Suite 105 • Roseville, CA 95661 • 916-780-2888

CITY OF MORRO BAY
WATER RECLAMATION FACILITY
LIFT STATIONS AND OFFSITE PIPELINES

STRUCTURAL
PUMP STATION A PLANS

DATE: MAY 2020
PROJECT NUMBER: 17-082
DRAWING NUMBER: 10-S-1
SHEET NUMBER: 145

CONFORMED SET - DEC 2020

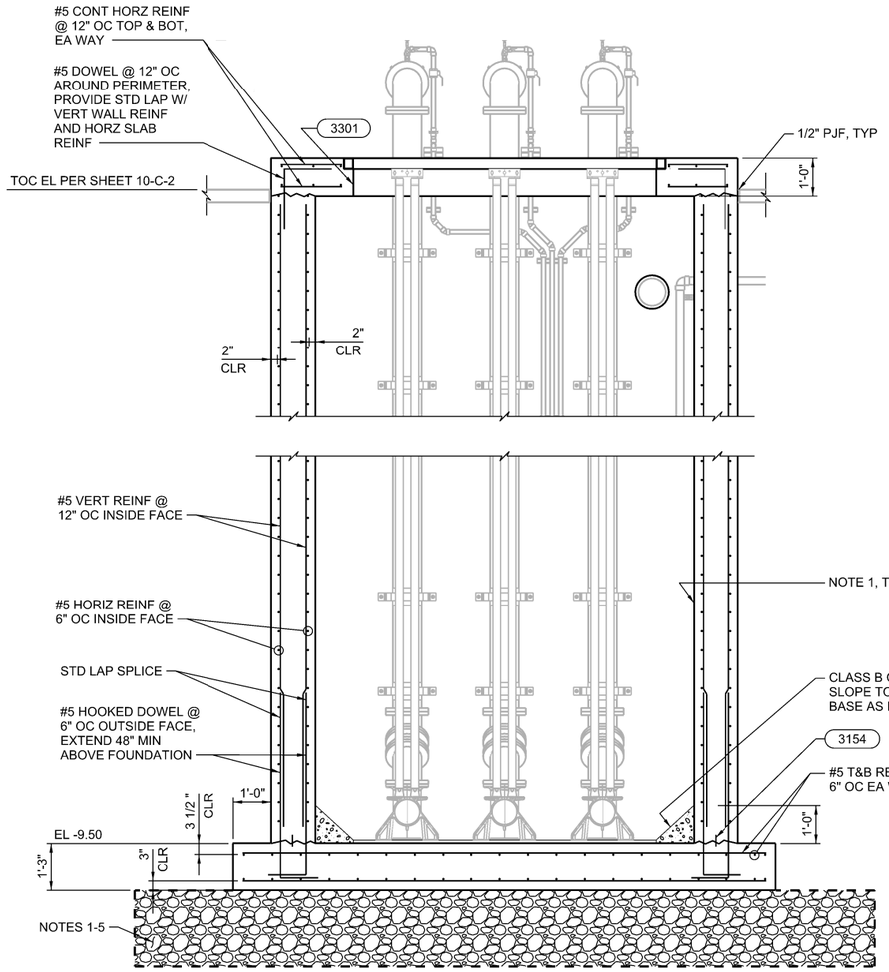

A SECTION
10-S-1 1/2" = 1'-0"

EXCAVATION/GRADING NOTES:

1. THE LOWER 4 FEET OF THE WET WELL EXCAVATION SHOULD BE PERFORMED WITH CAUTION, USING AN EXCAVATOR TYPE OF EQUIPMENT, AND SUCH THAT CONSTRUCTION EQUIPMENT WILL NOT TRAVERSE ACROSS THE BOTTOM OF THE EXCAVATION.
2. EXCAVATIONS FOR THE WET WELL SHOULD BE DEEPENED TO ALLOW AT LEAST 2 FEET OF CRUSHED ROCK (AGGREGATE FOR STABILIZATION) ENCASED IN A GEOTEXTILE/STABILIZATION TO BE PLACED ON THE UINDISTURBED SUBGRADE AT THE BOTTOM OF THE EXCAVATION.
3. PLACE THE AGGREGATE FOR STABILIZATION IN (2) 1 FOOT LIFTS. THE FIRST LIFT SHOULD BE PLACED WITH AN EXCAVATOR OR LIGHT EQUIPMENT SUCH AS A BOB CAT. CONSOLIDATE EACH LIFT W/ A MINIMUM OF (4) PASSES WITH A VIBRATORY PLATE OR BY TRACK WALKING WITH A WIDE-TRACKED DOZER. THE SECOND LIFT MAY BE PLACED USING A WIDE-TRACK DOZER OR SIMILAR EQUIPMENT.
4. EXTEND THE AGGREGATE FOR STABILIZATION 3 FEET MINIMUM BEYOND THE FOOTPRINT OF THE STRUCTURE & COMPLETELY ENCOMPASS WITH GEOTEXTILE FABRIC.
5. A LEVELING COURSE OF STRUCTURAL FILL MAY BE PLACED AND COMPACTED OVER THE STABILIZATION LAYER IF DESIRED.

WET WELL NOTES:

1. COAT ALL INTERIOR CONCRETE SURFACES W/ MULTI-COMPONENT RESIN-BASED MORTAR LINING SYSTEM SPECIFICALLY DESIGNED TO PROTECT FROM CHEMICAL ATTACK/CORROSION PER SPECIFICATION SECTION 09875.

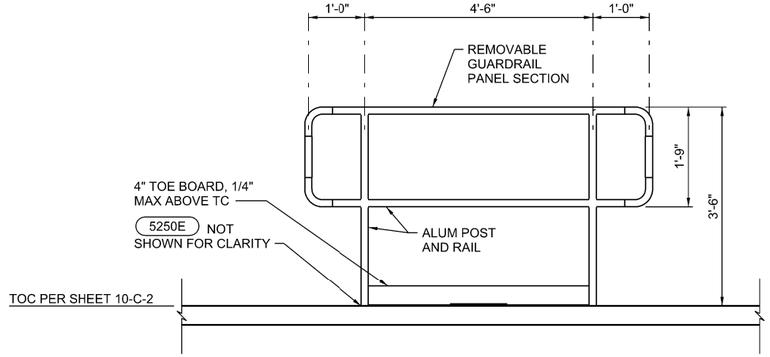

1 DETAIL
10-S-1 3/4" = 1'-0"

1 0 1 2 FEET
SCALE 3/4"=1'-0"
2 0 2 4 FEET
SCALE 1/2"=1'-0"

REGISTERED PROFESSIONAL ENGINEER ANDREW L. LINDEMAN No. C88058 CIVIL STATE OF CALIFORNIA
05-29-2020

DESIGNED A LINDEMAN
DRAWN J MARTIN
CHECKED J KELLOGG
APPROVED M FISHER

WATERWORKS ENGINEERS
2280 Douglas Blvd., Suite 105 • Roseville, CA 95661 • 916-780-2888

CITY OF MORRO BAY
WATER RECLAMATION FACILITY
LIFT STATIONS AND OFFSITE PIPELINES

STRUCTURAL
PUMP STATION A
SECTION AND DETAIL

DATE MAY 2020
PROJECT NUMBER 17-082
DRAWING NUMBER 10-S-2
SHEET NUMBER 146

FILENAME: 1782D-10S201.DGN PLOT DATE: 5/28/2020 11:32:01 AM

CONFORMED SET - DEC 2020

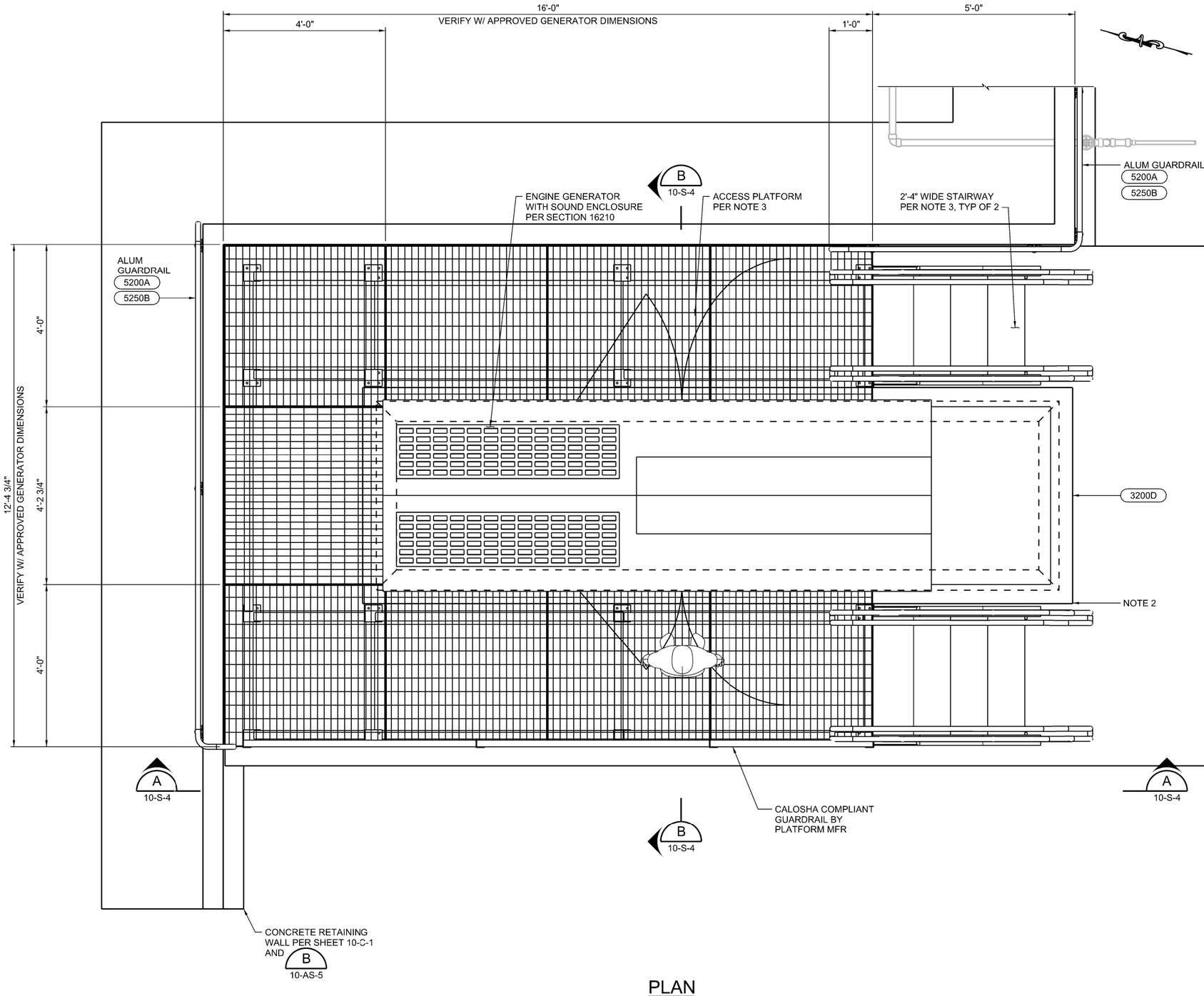

PLAN
3/4" = 1'-0"

NOTES:

1. GENERATOR SHOWN BASED ON KOHLER 250REOZJE GENERATOR WITH STATE CODE FUEL TANK. ACTUAL LAYOUT TO BE BASED ON APPROVED SUBMITTAL.
2. PROVIDE (2) #4x4'-0" DIAGONAL REINF @ 3" SPACING @ EA REENTRANT CORNER (4-TOTAL). PROVIDE STD 90° BEND WHERE SLAB EDGE PREVENTS PLACEMENT OF FULL LENGTH BAR.
3. WILDECK JIFFYSTAIR MODULAR STAIR SYSTEM, OR APPROVED EQUAL. PROVIDE CAL OSHA COMPLIANT STAIR SYSTEM WITH GUARDRAIL AS SHOWN. COORDINATE ±28" PLATFORM HEIGHT WITH APPROVED GENERATOR. HOT DIP GALVANIZED FINISH.

1 0 1 2 FEET
SCALE 3/4"=1'-0"

DESIGNED A LINDEMAN
DRAWN J MARTIN
CHECKED J KELLOGG
APPROVED M FISHER

WATERWORKS ENGINEERS
2280 Douglas Blvd., Suite 105 • Roseville, CA 95661 • 916-780-2888

CITY OF MORRO BAY
WATER RECLAMATION FACILITY
LIFT STATIONS AND OFFSITE PIPELINES

STRUCTURAL
PUMP STATION A
GENERATOR
PLAN

REGISTERED PROFESSIONAL ENGINEER
ANDREW L. LINDEMAN
No. C88058
CIVIL
STATE OF CALIFORNIA
05-29-2020

DATE
MAY 2020
PROJECT NUMBER
17-082
DRAWING NUMBER
10-S-3
SHEET NUMBER 147

FILENAME: 1782D-10S102.DGN PLOT DATE: 5/28/2020 11:18:38 AM

CONFORMED SET - DEC 2020

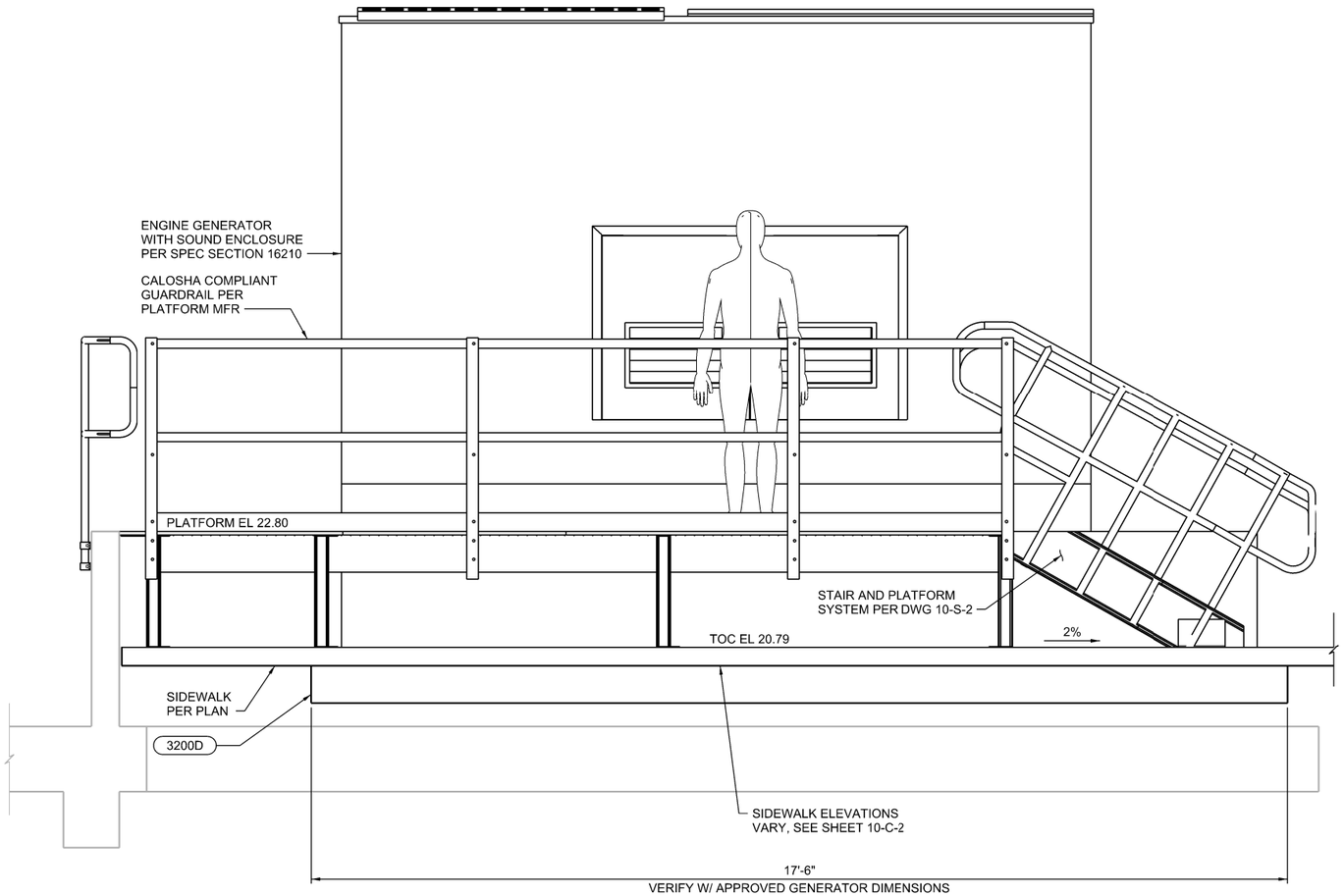

A SECTION
10-S-3 3/4" = 1'-0"

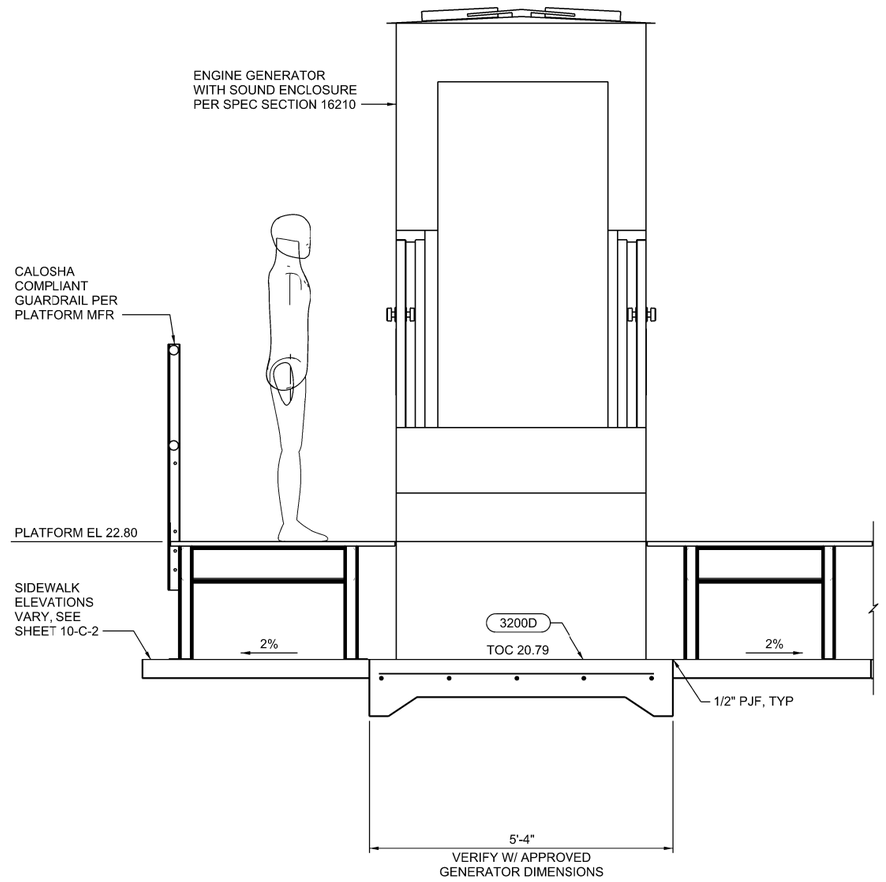

B SECTION
10-S-3 3/4" = 1'-0"

1 0 1 2 FEET
SCALE 3/4"=1'-0"

REGISTERED PROFESSIONAL ENGINEER
ANDREW L. LINDEMAN
No. C88058
CIVIL
STATE OF CALIFORNIA
05-29-2020

DESIGNED A LINDEMAN
DRAWN J MARTIN
CHECKED J KELLOGG
APPROVED M FISHER

WATERWORKS ENGINEERS
2280 Douglas Blvd., Suite 105 • Roseville, CA 95661 • 916-780-2888

CITY OF MORRO BAY
WATER RECLAMATION FACILITY
LIFT STATIONS AND OFFSITE PIPELINES

STRUCTURAL
PUMP STATION A
GENERATOR
SECTIONS

DATE
MAY 2020
PROJECT NUMBER
17-082
DRAWING NUMBER
10-S-4
SHEET NUMBER 148

FILENAME: 1782D-10S202.DGN PLOT DATE: 5/28/2020 11:40:07 AM

CONFORMED SET - DEC 2020

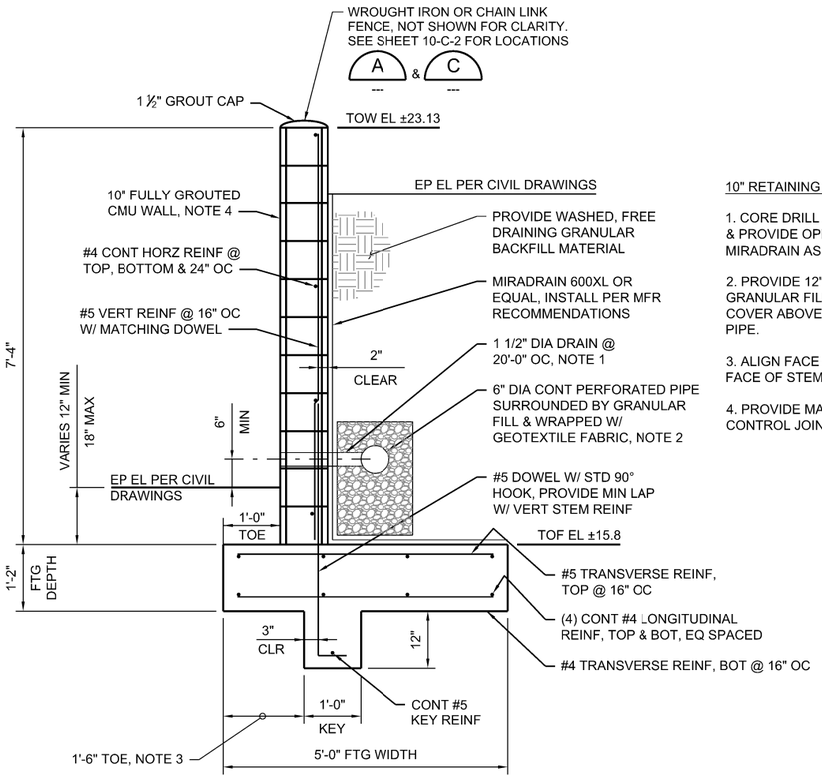

10" RETAINING WALL NOTES:

1. CORE DRILL DRAIN IN WALL & PROVIDE OPENING IN MIRADRAIN AS REQUIRED

2. PROVIDE 12" MIN WIDTH OF GRANULAR FILL W/ 6" MIN COVER ABOVE PERFORATED PIPE.

3. ALIGN FACE OF KEY WITH FACE OF STEM

4. PROVIDE MASONRY CRACK CONTROL JOINTS @ 22' OC MAX

1 DETAIL
10-C-2 3/4" = 1'-0"

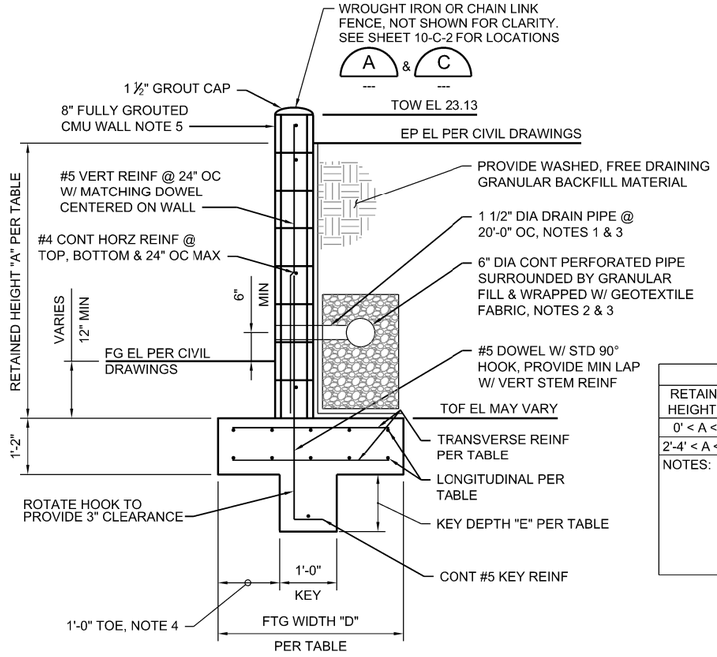

8" RETAINING WALL NOTES:

1.CORE DRILL DRAIN IN WALL AND PROVIDE OPENING IN MIRADRAIN AS REQUIRED.

2. PROVIDE 12" MIN WIDTH OF GRANULAR FILL W/ 6" MIN COVER ABOVE PERFORATED PIPE.

3. PERFORATED DRAIN AND GRANULAR BACKFILL NOT REQUIRED WHERE RETAINED HEIGHT IS LESS THAN 18".

4. ALIGN FACE OF KEY WITH FACE OF STEM.

5. PROVIDE MASONRY CRACK CONTROL JOINT @ 24' OC MAX

RETAINING WALL TABLE

RETAINED HEIGHT "A"	TOE WIDTH "B"	FOOTING WIDTH "C"	KEY DEPTH "D"	VERT WALL REINF	TRANS FTG REINF[1]	LONG FTG REINF[1, 2]
0' < A < 2'-4"	1'-0"	2'-9"	0"	#5 @ 24" OC	#4 @ 12" OC	(2) #4 CONT
2'-4' < A < 4'-10"	1'-0"	3'-4"	1'-0"	#5 @ 16" OC	#4 @ 16" OC	(3) #4 CONT

NOTES:
1) TRANS AND LONG REINF SHOWN IS TYPICAL FOR TOP & BOT MATS
2) EQUALLY SPACE CONT LONG REINF ACROSS FTG WIDTH
3) FIELD LOCATE WALL STEP LOCATIONS CONSIDERING MINIMUM SOIL COVER OVER TOE. STEP FOOTING PER (3308) TYPE B
4) FOR WALL HEIGHTS GREATER THAN 4'-10" USE DETAIL 2 / --
ALIGN EXPOSED FACES OF CMU WALL BLOCKS WITH DIFFERING WIDTHS

2 DETAIL
10-C-2 3/4" = 1'-0"

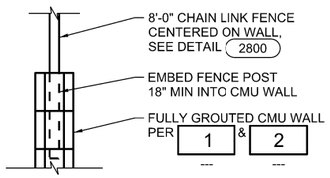

A SECTION
--- 3/4" = 1'-0"

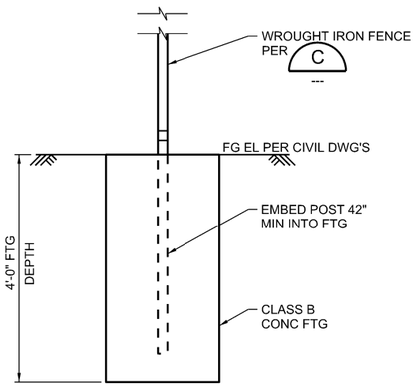

B SECTION
10-C-2 3/4" = 1'-0"

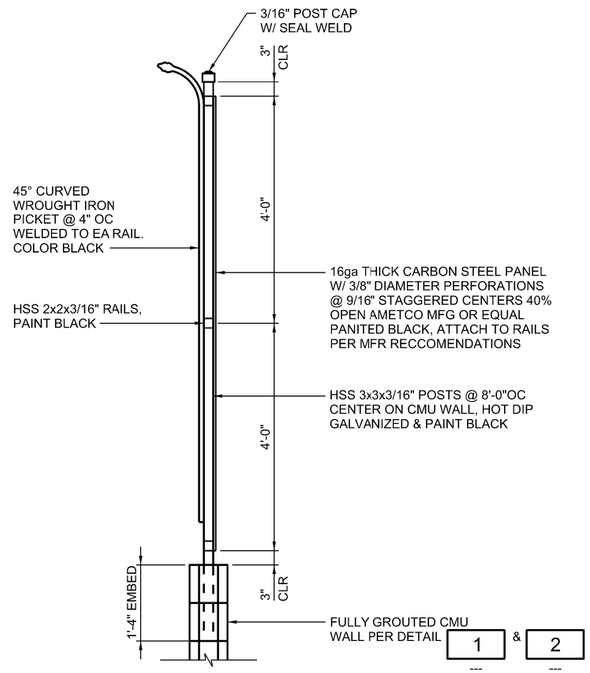

C SECTION
--- 3/4" = 1'-0"

1 0 1 2 FEET
SCALE 3/4"=1'-0"

REGISTERED PROFESSIONAL ENGINEER ARMEN L. LINDEMAN No. C88058 CIVIL STATE OF CALIFORNIA
05-29-2020

DESIGNED A LINDEMAN
DRAWN J MARTIN
CHECKED J KELLOGG
APPROVED M FISHER

WATERWORKS ENGINEERS

CITY OF MORRO BAY
WATER RECLAMATION FACILITY
LIFT STATIONS AND OFFSITE PIPELINES

STRUCTURAL
STRUCTURAL SECTIONS AND DETAILS

DATE MAY 2020
PROJECT NUMBER 17-082
DRAWING NUMBER 10-S-5
SHEET NUMBER 149

FILENAME: 1782D-10S801.DGN PLOT DATE: 2/6/2020 2:28:43 PM

CONFORMED SET - DEC 2020

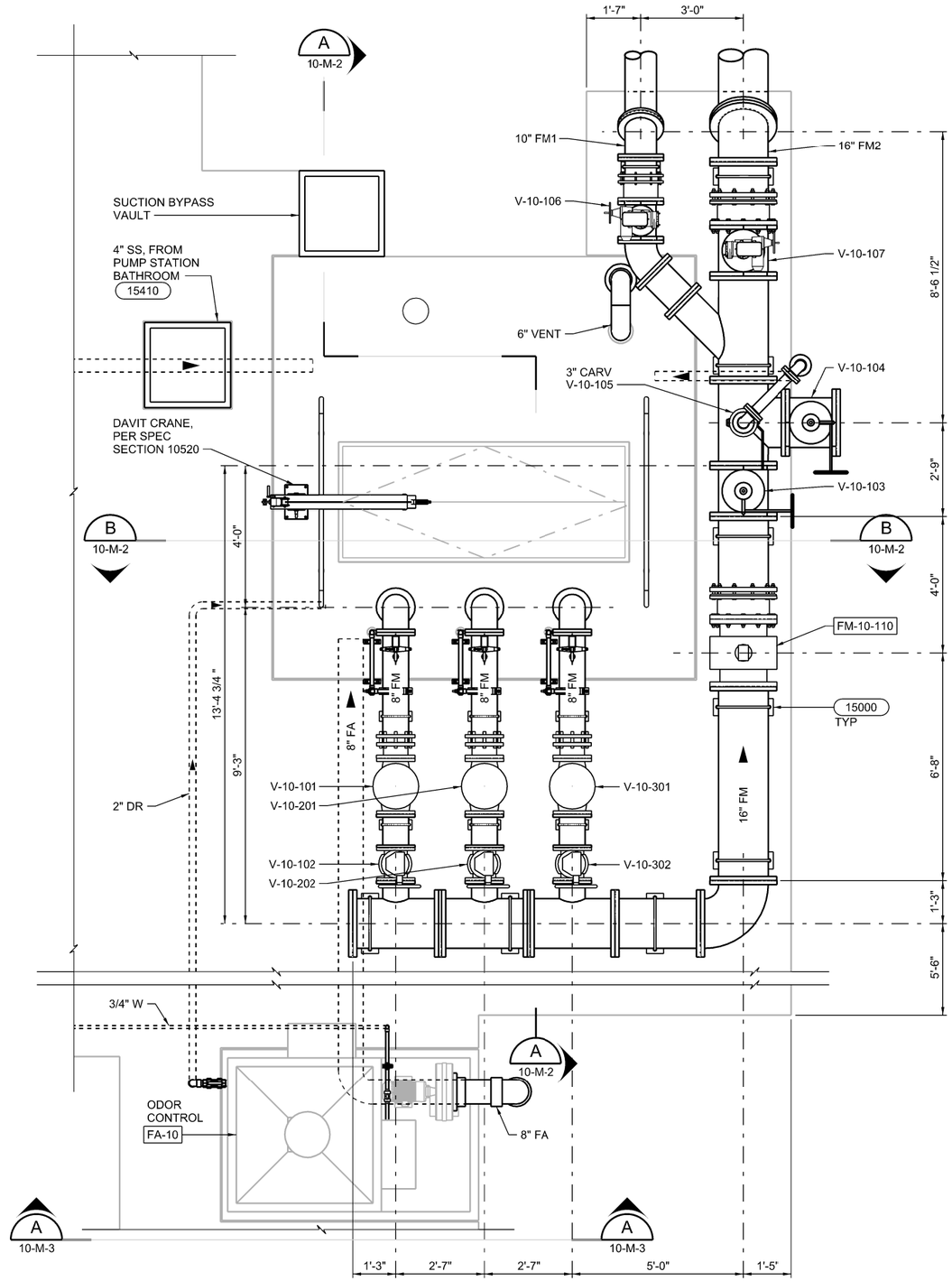

TOP PLAN
1/2" = 1'-0"

NOTES:

1. PUMP STATION DESIGN IS BASED ON FLYGT PUMPS LISTED IN SPECIFICATION SECTION 11300.

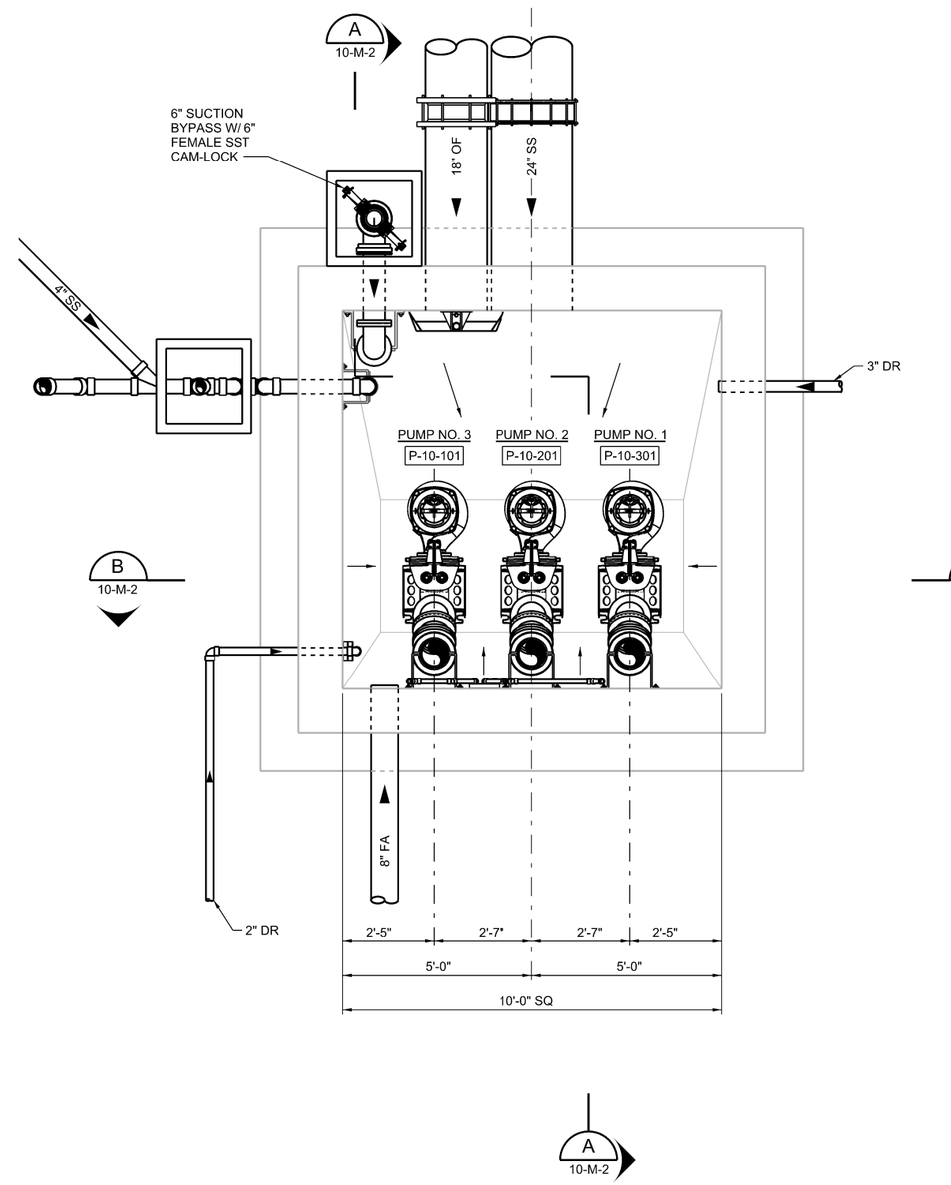

LOWER PLAN
1/2" = 1'-0"

2 0 2 4 FEET
SCALE 1/2"=1'-0"

DESIGNED K ALACON
DRAWN J MARTIN
CHECKED K ALACON
APPROVED M FISHER

WATERWORKS ENGINEERS
2260 Douglas Blvd., Suite 105 • Roseville, CA 95661 • 916-780-2888

CITY OF MORRO BAY
WATER RECLAMATION FACILITY
LIFT STATIONS AND OFFSITE PIPELINES

MECHANICAL
PUMP STATION PLANS

REGISTERED PROFESSIONAL ENGINEER
KRISTINA P. ALACON
No. C70952
CIVIL
STATE OF CALIFORNIA
05-29-2020

DATE MAY 2020
PROJECT NUMBER 17-082
DRAWING NUMBER 10-M-1
SHEET NUMBER 150

FILENAME: 1782D-10M101.DGN PLOT DATE: 5/28/2020 7:45:54 AM

CONFORMED SET - DEC 2020

NOTES:

1. FLOOR SLEEVE SHALL BE SCH 80 PVC.

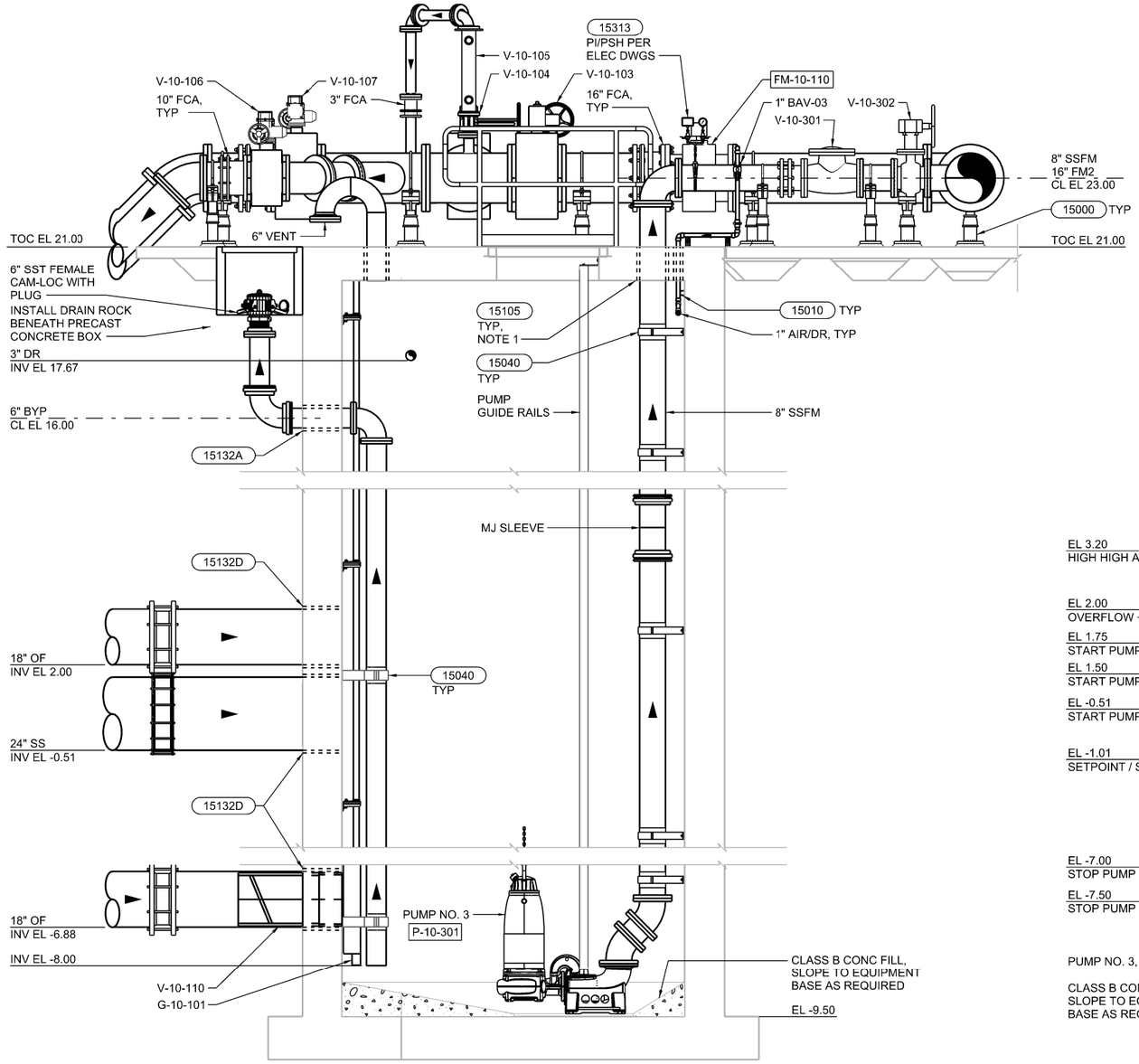

A SECTION
10-M-1 1/2" = 1'-0"

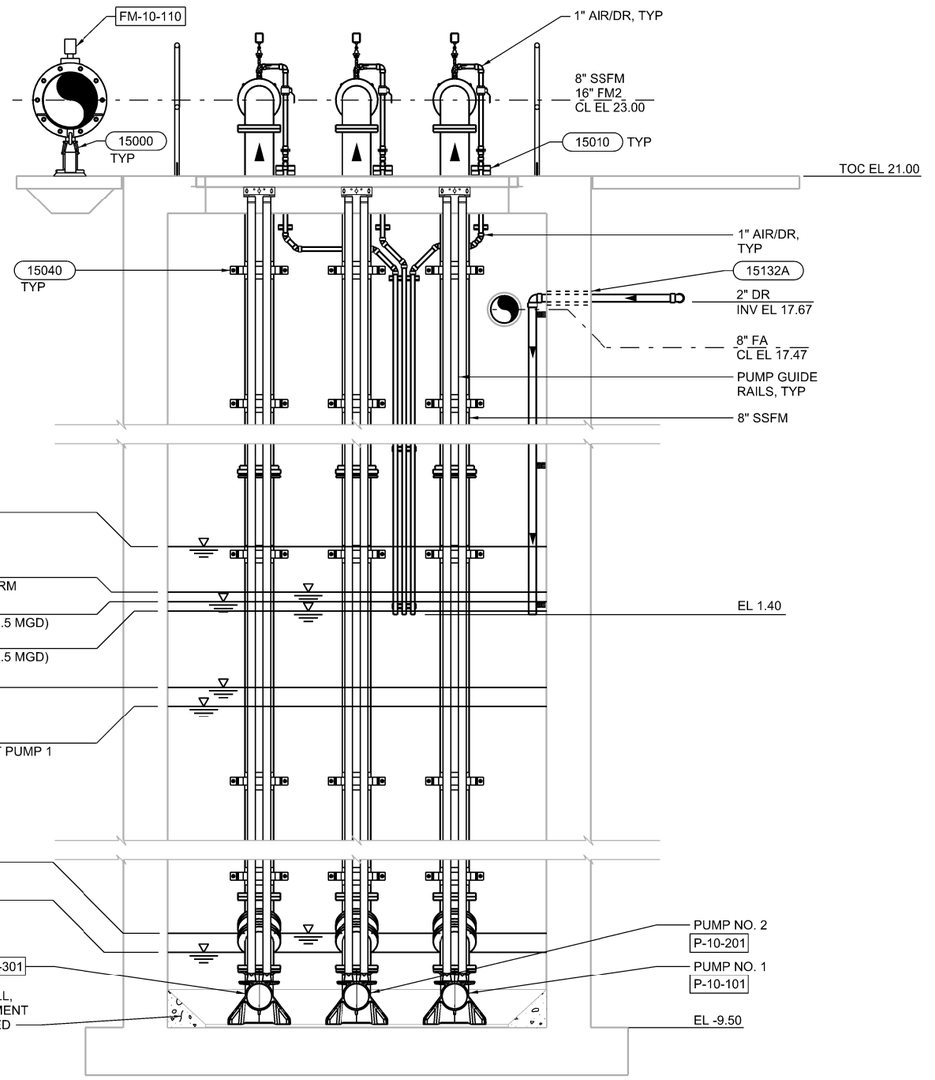

B SECTION
10-M-1 1/2" = 1'-0"

2 0 2 4 FEET
SCALE 1/2"=1'-0"

REGISTERED PROFESSIONAL ENGINEER
KRISTINA P. ALACON
No. C70952
CIVIL
STATE OF CALIFORNIA
05-29-2020

DESIGNED K ALACON
DRAWN J MARTIN
CHECKED K ALACON
APPROVED M FISHER

WATERWORKS ENGINEERS
2280 Douglas Blvd., Suite 105 • Roseville, CA 95661 • 916-780-2888

CITY OF MORRO BAY
WATER RECLAMATION FACILITY
LIFT STATIONS AND OFFSITE PIPELINES

MECHANICAL
PUMP STATION A SECTIONS

DATE MAY 2020
PROJECT NUMBER 17-082
DRAWING NUMBER 10-M-2
SHEET NUMBER 151

FILENAME: 1782D-10M201.DGN PLOT DATE: 5/28/2020 10:58:10 AM

CONFORMED SET - DEC 2020

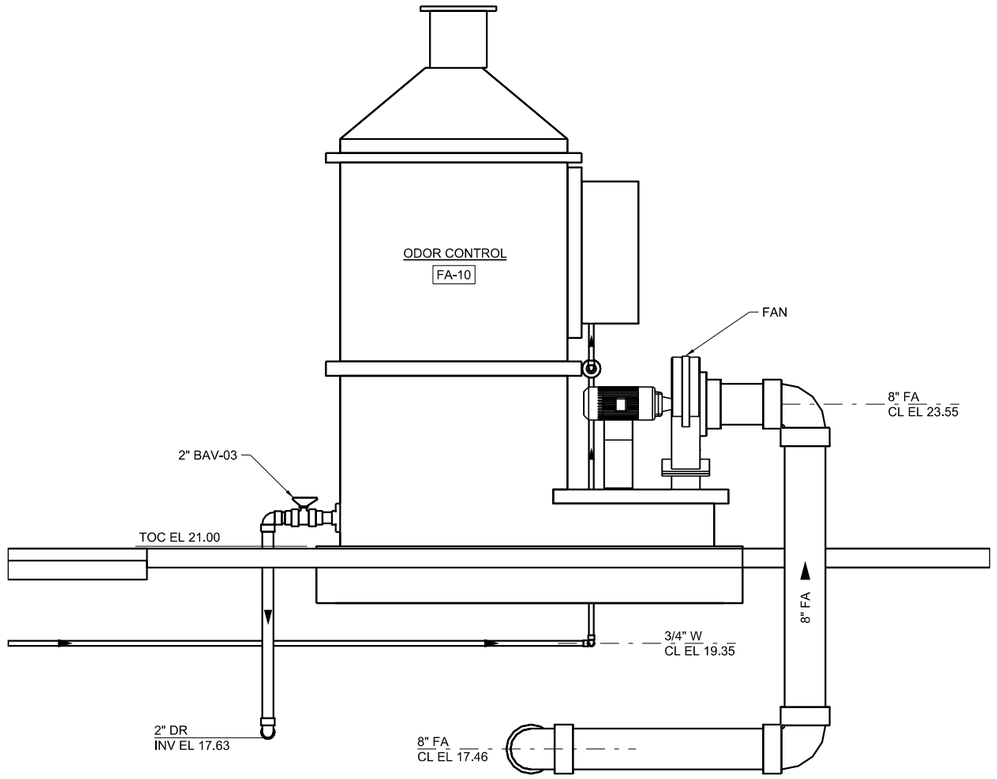

A SECTION
10-M-1 3/4" = 1'-0"

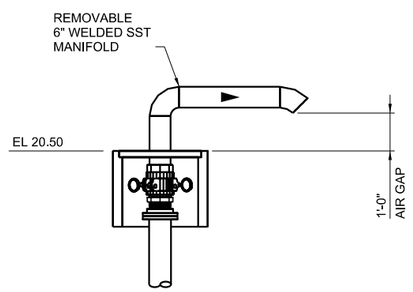

B SECTION
10-C-1 1/2" = 1'-0"

2 0 2 4 FEET
SCALE 1/2"=1'-0"

1 0 1 2 FEET
SCALE 3/4"=1'-0"

REGISTERED PROFESSIONAL ENGINEER
KRISTINA P. ALACON
No. C70952
CIVIL
STATE OF CALIFORNIA
05-29-2020

DESIGNED K ALACON
DRAWN J MARTIN
CHECKED K ALACON
APPROVED M FISHER

WATERWORKS ENGINEERS
2290 Douglas Blvd., Suite 105 • Roseville, CA 95661 • 916-780-2888

CITY OF MORRO BAY
WATER RECLAMATION FACILITY
LIFT STATIONS AND OFFSITE PIPELINES

MECHANICAL
PUMP STATION A SECTIONS

DATE MAY 2020
PROJECT NUMBER 17-082
DRAWING NUMBER 10-M-3
SHEET NUMBER 152

FILENAME: 1782D-10M202.DGN PLOT DATE: 5/26/2020 4:32:04 PM

CONFORMED SET - DEC 2020

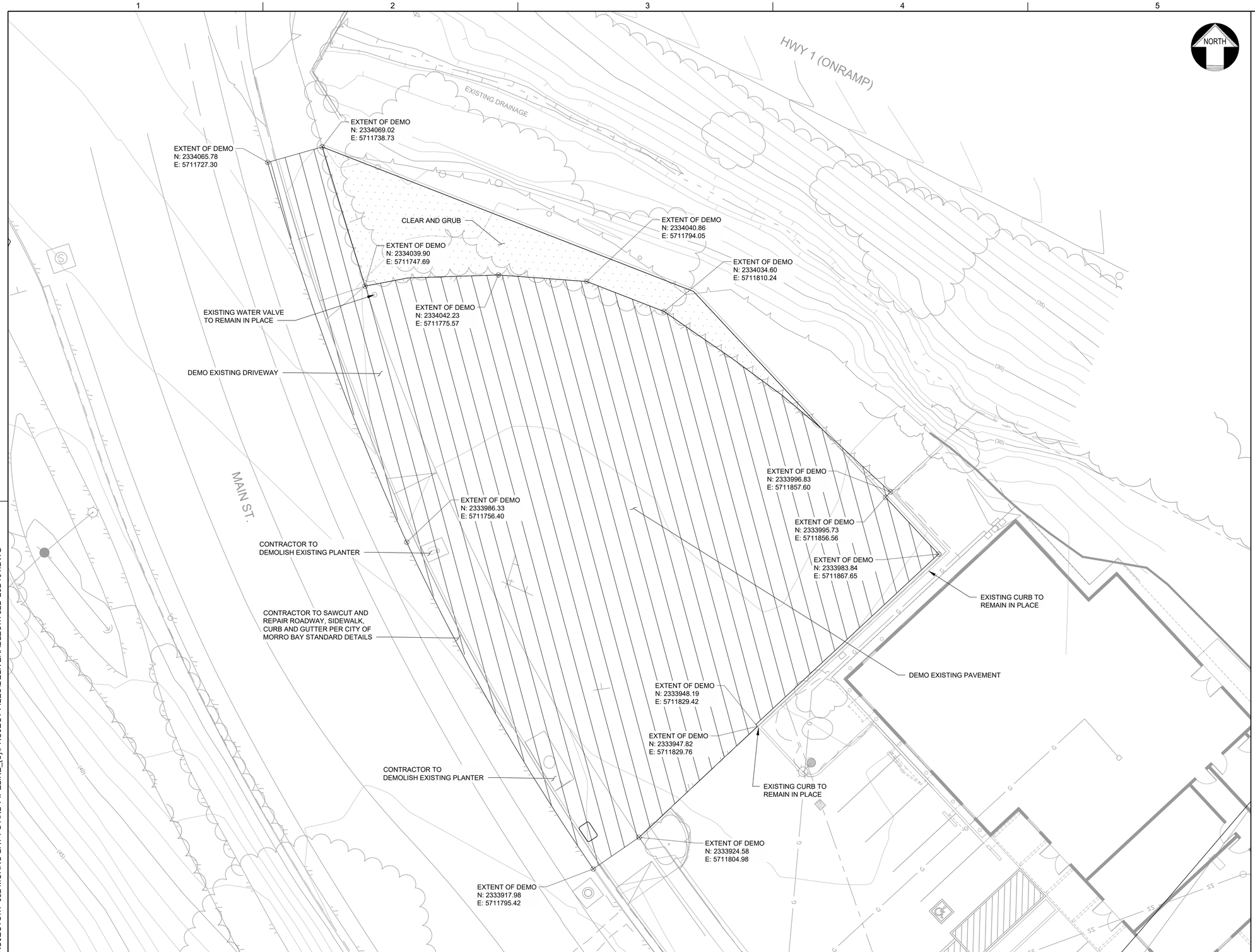

10 0 10 20 FEET
SCALE 1"=10'

REGISTERED PROFESSIONAL ENGINEER
RACHAEL T. LEWIS
No. C71194
CIVIL
STATE OF CALIFORNIA
05/29/2020

DESIGN	P. WEBSTER
DRAWN	P. WEBSTER
CHECKED	T. LEWIS
APPROVED	M. FISHER

WATERWORKS ENGINEERS
2290 Douglas Blvd, Suite 105 • Roseville, CA 95661 • 916-780-2888

CITY OF MORRO BAY
WATER RECLAMATION FACILITY
LIFT STATION AND OFFSITE
PIPELINES

CIVIL

PUMP STATION B DEMOLITION PLAN

DATE	MAY 2020
PROJECT NUMBER	17-082
DRAWING NUMBER	20-D-1
SHEET NUMBER	153

L:\CAD\PROJECTS\17-082 MORRO BAY PS AND PIPELINE_(S)\PROJECT FILES\DELIVERABLES\1782D-20D101.DWG

JOB NUMBER: 17-082 FILENAME: 1782D-20D101.DWG PLOT DATE: 06/11/20 PLOT TIME: 09:52:13

CONFORMED SET - DEC 2020

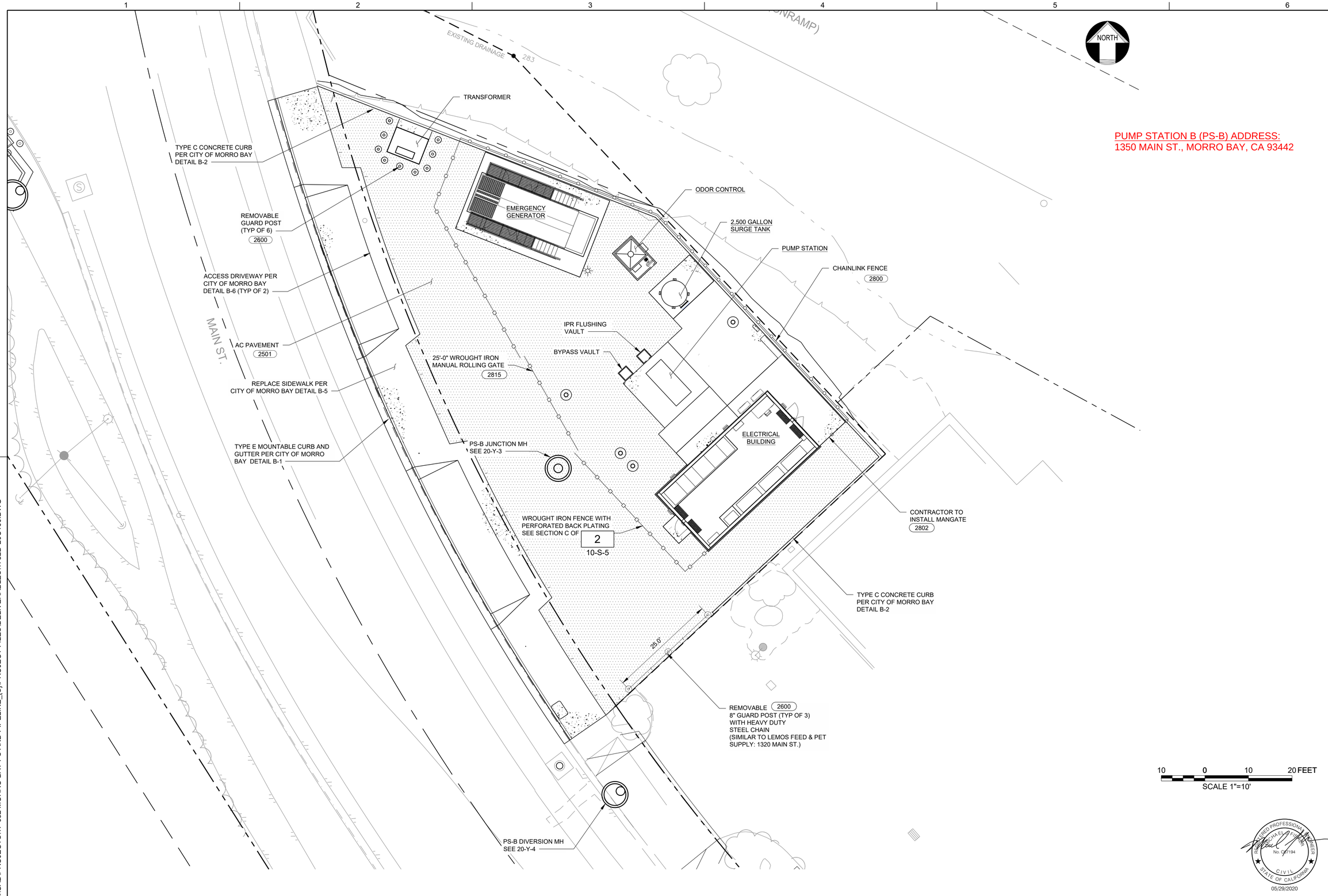

PUMP STATION B (PS-B) ADDRESS:
1350 MAIN ST., MORRO BAY, CA 93442

L:\CAD\PROJECTS\17-082 MORRO BAY PS AND PIPELINE_{S}\PROJECT FILES\DELIVERABLES\1782D-20C100.DWG

DESIGN P WEBSTER
DRAWN P WEBSTER
CHECKED T LEWIS
APPROVED M FISHER

WATERWORKS ENGINEERS
2260 Douglas Blvd, Suite 105 • Roseville, CA 95661 • 916-780-2888

CITY OF MORRO BAY
WATER RECLAMATION FACILITY
LIFT STATION AND OFFSITE PIPELINES

CIVIL
PUMP STATION B OVERALL PLAN

DATE MAY 2020
PROJECT NUMBER 17-082
DRAWING NUMBER 20-C-1
SHEET NUMBER 154

05/29/2020

JOB NUMBER: 17-082 FILENAME: 1782D-20C100.DWG PLOT DATE: 06/11/20 PLOT TIME: 09:49:26

CONFORMED SET - DEC 2020

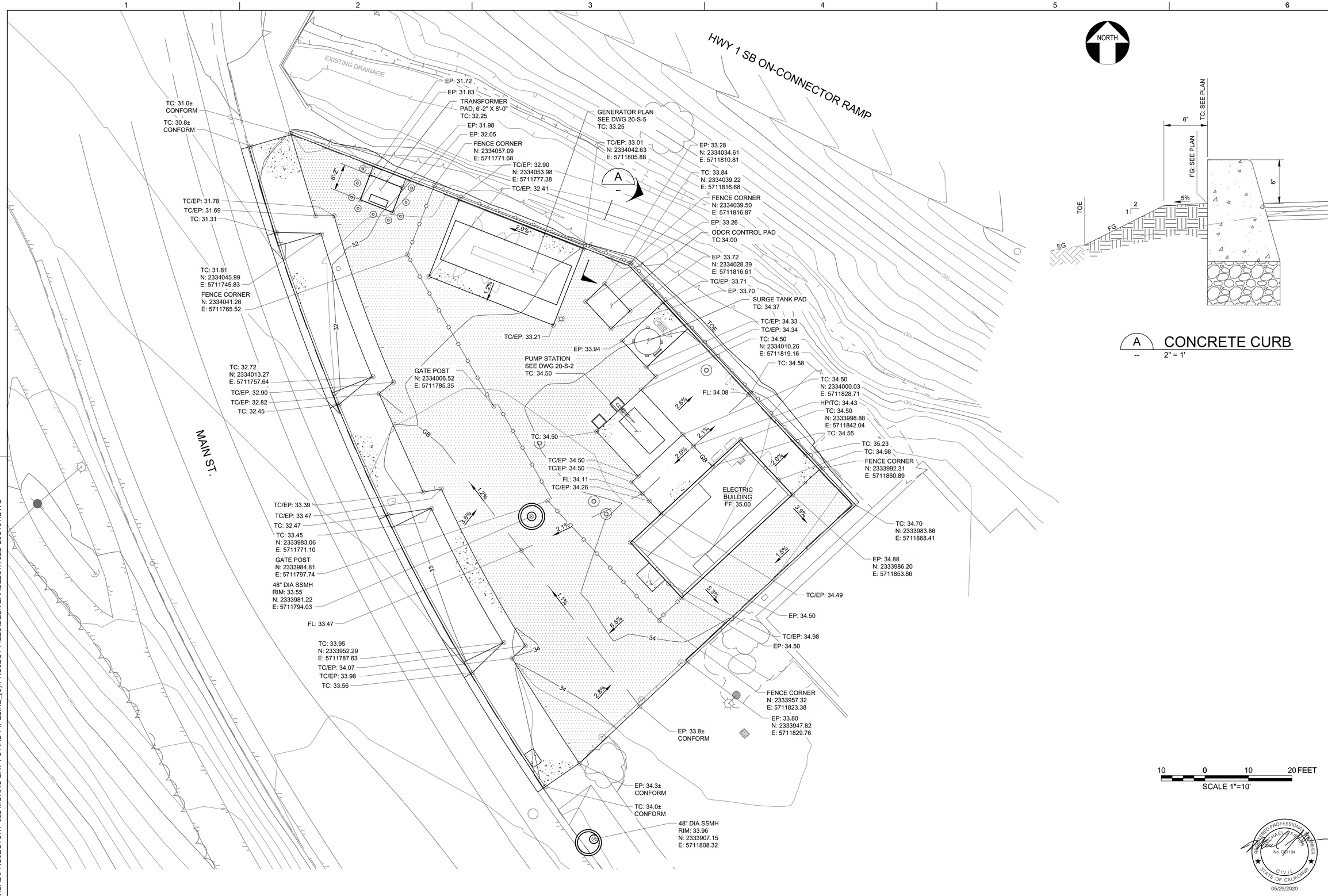

A CONCRETE CURB
-- 2" = 1'

DESIGN P WEBSTER
DRAWN P WEBSTER
CHECKED T LEWIS
APPROVED M FISHER

WATERWORKS ENGINEERS
2260 Douglas Blvd, Suite 105 • Roseville, CA 95661 • 916-780-2888

CITY OF MORRO BAY
WATER RECLAMATION FACILITY
LIFT STATION AND OFFSITE PIPELINES

CIVIL
PUMP STATION B GRADING PLAN

REGISTERED PROFESSIONAL ENGINEER
MICHAEL J. FISHER
No. C67194
CIVIL
STATE OF CALIFORNIA
05/29/2020

DATE MAY 2020
PROJECT NUMBER 17-082
DRAWING NUMBER 20-C-2
SHEET NUMBER 155

L:\CAD\PROJECTS\17-082 MORRO BAY PS AND PIPELINE_{S}\PROJECT FILES\DELIVERABLES\1782D-20C101.DWG

JOB NUMBER: 17-082 FILENAME: 1782D-20C101.DWG PLOT DATE: 06/11/20 PLOT TIME: 09:51:05

CONFORMED SET - DEC 2020

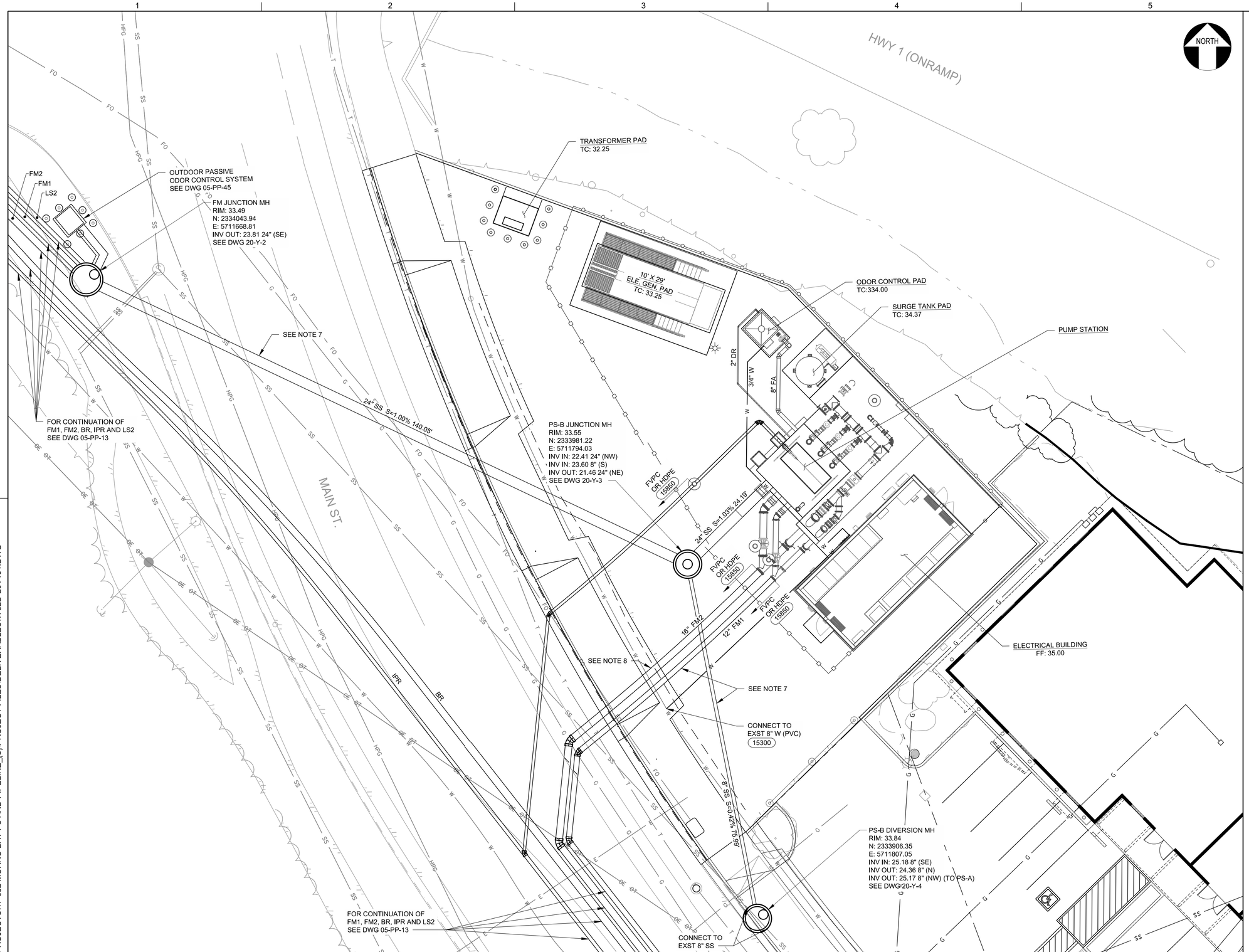

NOTES:

1. SEWER MANHOLES SHALL BE PER CITY OF MORRO BAY STANDARD DETAIL S-3 UNLESS OTHERWISE NOTED.
2. SEWER MANHOLE FRAME AND COVER SHALL BE PINKERTON NO. A-107, WEIGHT 264 LBS, OR APPROVED EQUAL. COVER SHALL BE MARKED WITH "SEWER" IN THE CENTER. 2120
3. CONSTRUCT IPR AND WATER LINES PER TRENCH DETAIL 2/05-CD-09.
4. THE CONTRACTOR SHALL COMPLY WITH THE GENERAL CIVIL NOTES AND PERMITTING GENERAL NOTES.
5. CONSTRUCT GRAVITY SS PIPELINES PER TRENCH DETAIL 3/05-CD-09.
6. CONSTRUCT DUAL FM-1 AND FM-2 PIPELINES PER TRENCH DETAIL 2/05-CD-05. REFERENCE PLAN AND PROFILE DRAWING FOR MATERIAL SIZE AND CLASS.
7. SEE DWG 05-PP-45 FOR PLAN AND PROFILE.
8. EXTEND TRACER WIRE ALONG FM2 TO PS-B INSTALL TRACER WIRE TERMINAL 2060 AND GROUND ROD 16410

10 0 10 20 FEET
SCALE 1"=10'

REGISTERED PROFESSIONAL ENGINEER
MICHAEL J. FISHER
No. C67194
CIVIL
STATE OF CALIFORNIA
05/29/2020

DESIGN P WEBSTER
DRAWN P WEBSTER
CHECKED T LEWIS
APPROVED M FISHER

WATERWORKS ENGINEERS
2260 Douglas Blvd, Suite 105 • Roseville, CA 95661 • 916-780-2888

CITY OF MORRO BAY
WATER RECLAMATION FACILITY
LIFT STATION AND OFFSITE PIPELINES

CIVIL
PUMP STATION B YARD PIPING PLAN

DATE MAY 2020
PROJECT NUMBER 17-082
DRAWING NUMBER 20-Y-1
SHEET NUMBER 156

L:\CAD\PROJECTS\17-082 MORRO BAY PS AND PIPELINE_{S}\PROJECT FILES\DELIVERABLES\1782D-20Y101.DWG

JOB NUMBER: 17-082 FILENAME: 1782D-20Y101.DWG PLOT DATE: 06/11/20 PLOT TIME: 09:55:04

CONFORMED SET - DEC 2020

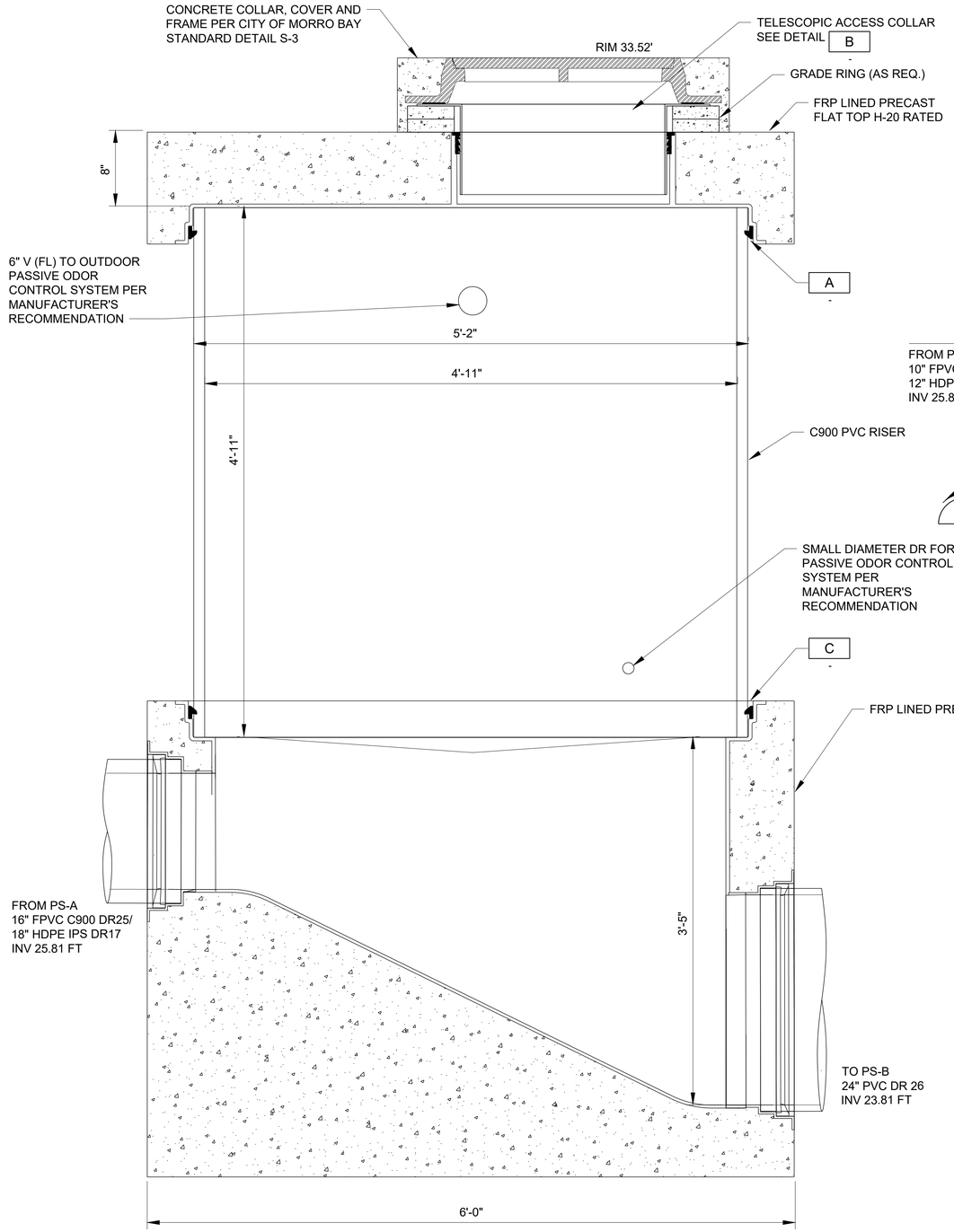

A SECTION
-- NTS

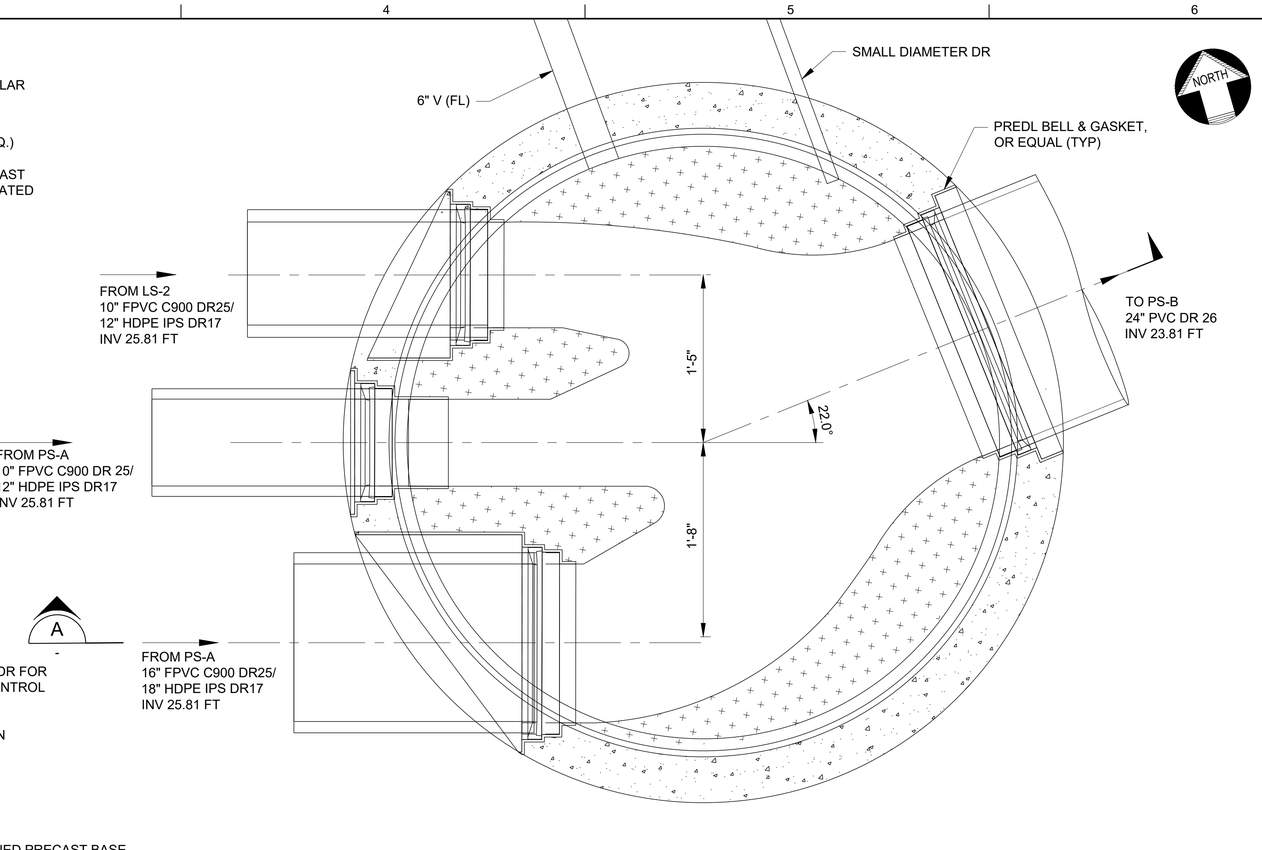

FM JUNCTION MANHOLE PLAN
NTS

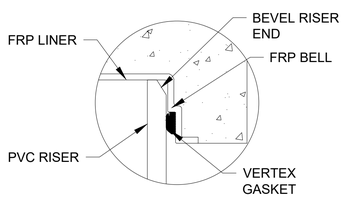

A JOINT DETAIL
- NTS

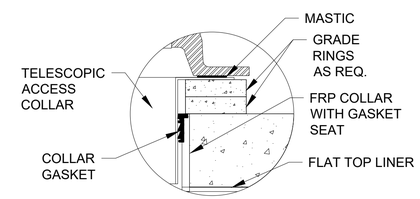

B JOINT DETAIL
- NTS

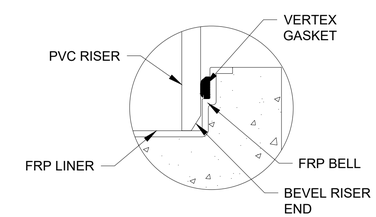

C JOINT DETAIL
- NTS

DESIGN K ALACON
DRAWN K ALACON
CHECKED M FISHER
APPROVED M FISHER

WATERWORKS ENGINEERS
2260 Douglas Blvd, Suite 105 • Roseville, CA 95661 • 916-780-2888

CITY OF MORRO BAY
WATER RECLAMATION FACILITY
LIFT STATION AND OFFSITE PIPELINES

CIVIL
FM JUNCTION MANHOLE DETAILS

REGISTERED PROFESSIONAL ENGINEER
MICHAEL A. FISHER
No. C67194
CIVIL
STATE OF CALIFORNIA
05/29/2020

DATE MAY 2020
PROJECT NUMBER 17-082
DRAWING NUMBER 20-Y-2
SHEET NUMBER 157

L:\CAD\PROJECTS\17-082 MORRO BAY PS AND PIPELINE_{S}\PROJECT FILES\DELIVERABLES\1782D-20Y200.DWG

JOB NUMBER: 14-010 FILENAME: 1782D-20Y200.DWG PLOT DATE: 11-Jun-20 PLOT TIME: 09:55:11

CONFORMED SET - DEC 2020

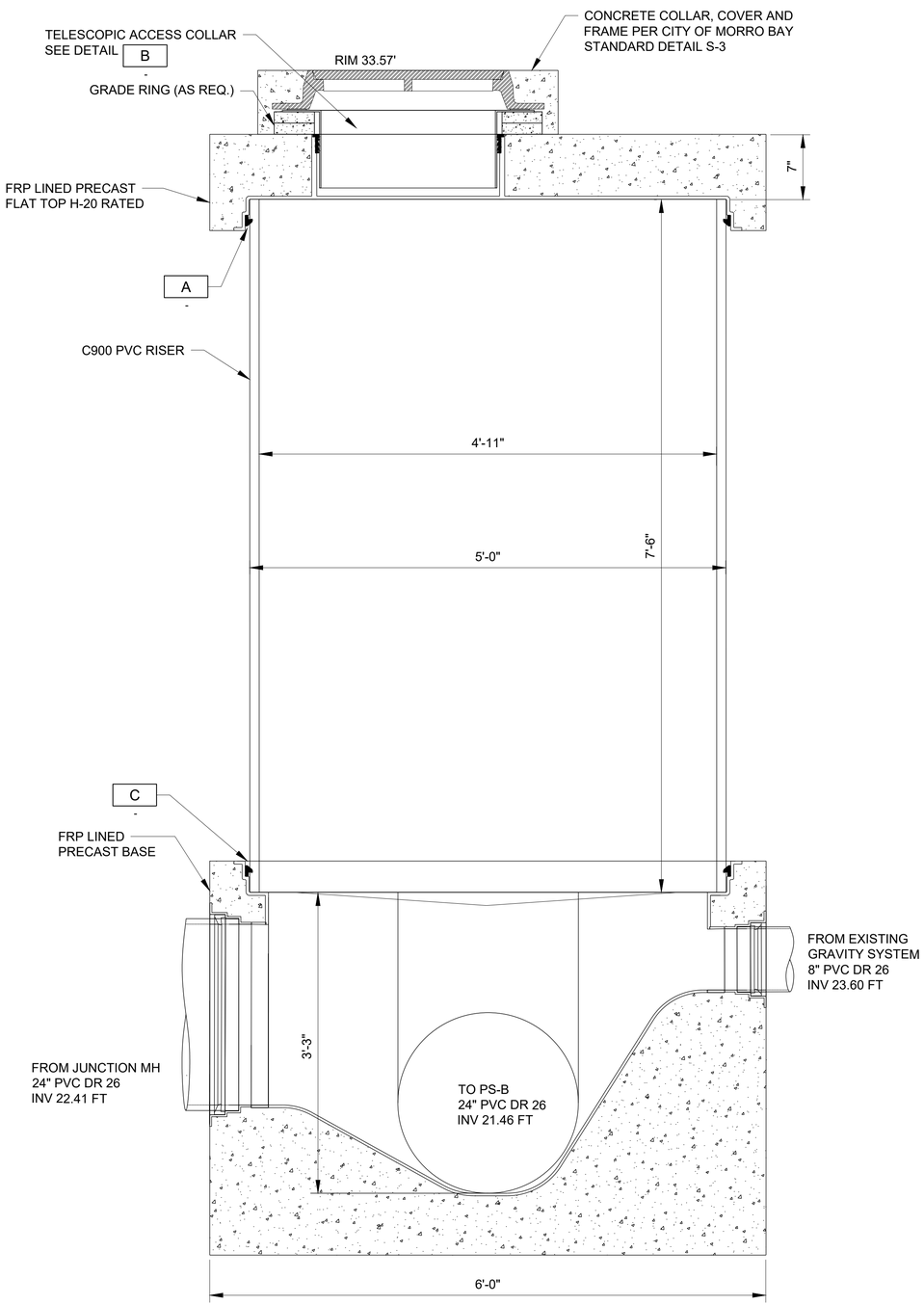

A SECTION
-- NTS

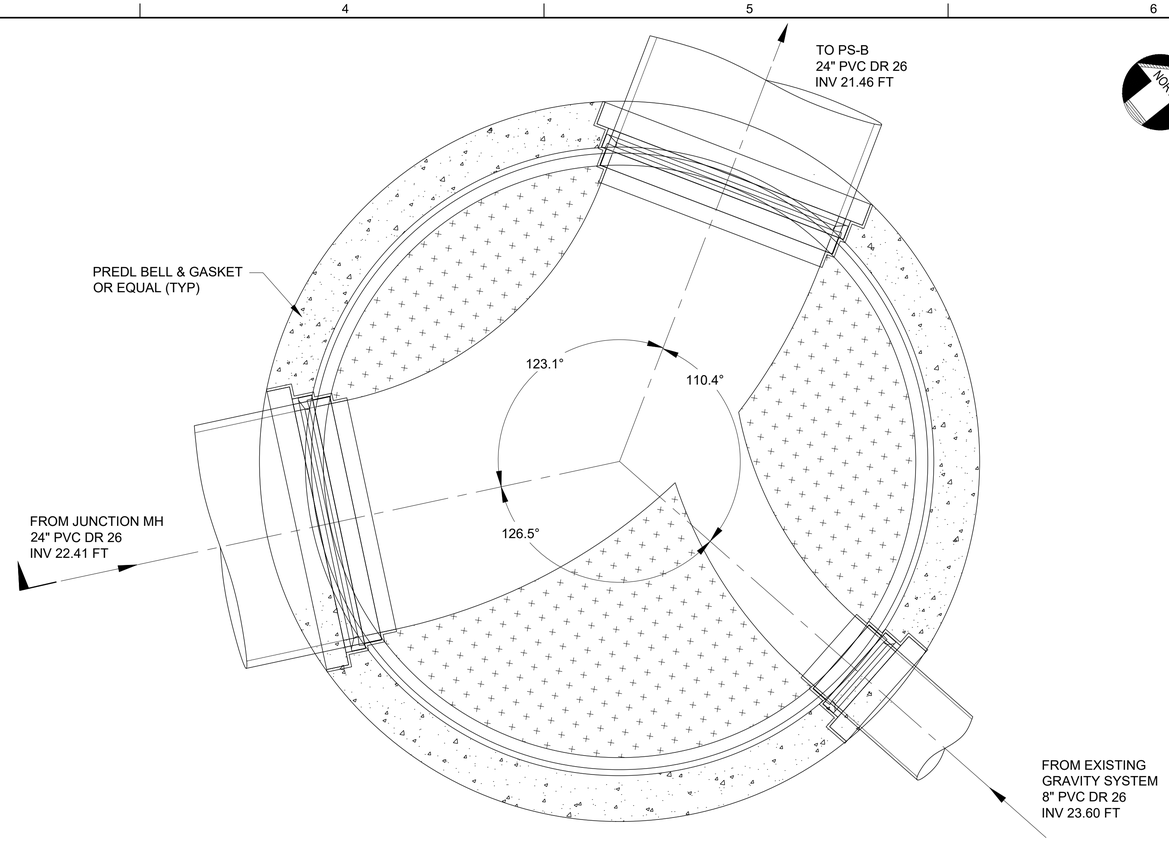

PS-B JUNCTION MANHOLE PLAN
NTS

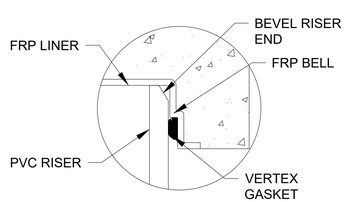

A JOINT DETAIL
- NTS

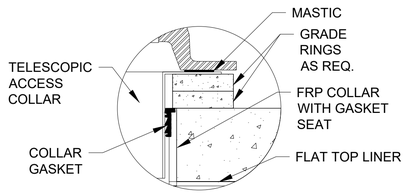

B JOINT DETAIL
- NTS

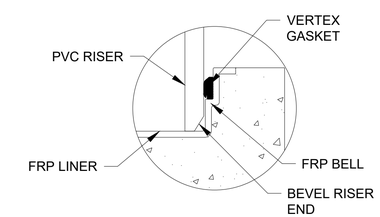

C JOINT DETAIL
- NTS

REGISTERED PROFESSIONAL ENGINEER
MICHAEL A. FISHER
No. C67194
CIVIL
STATE OF CALIFORNIA
05/29/2020

DESIGN K ALACON
DRAWN K ALACON
CHECKED M FISHER
APPROVED M FISHER

WATERWORKS ENGINEERS
2260 Douglas Blvd, Suite 105 • Roseville, CA 95661 • 916-780-2888

CITY OF MORRO BAY
WATER RECLAMATION FACILITY
LIFT STATION AND OFFSITE
PIPELINES

CIVIL
PS-B JUNCTION MANHOLE
DETAILS

DATE
MAY 2020
PROJECT NUMBER
17-082
DRAWING NUMBER
20-Y-3
SHEET NUMBER 158

L:\CAD\PROJECTS\17-082 MORRO BAY PS AND PIPELINE_{S}\PROJECT FILES\DELIVERABLES\1782D-20Y200.DWG

JOB NUMBER: 14-010 FILENAME: 1782D-20Y200.DWG PLOT DATE: 11-Jun-20 PLOT TIME: 09:55:16

CONFORMED SET - DEC 2020

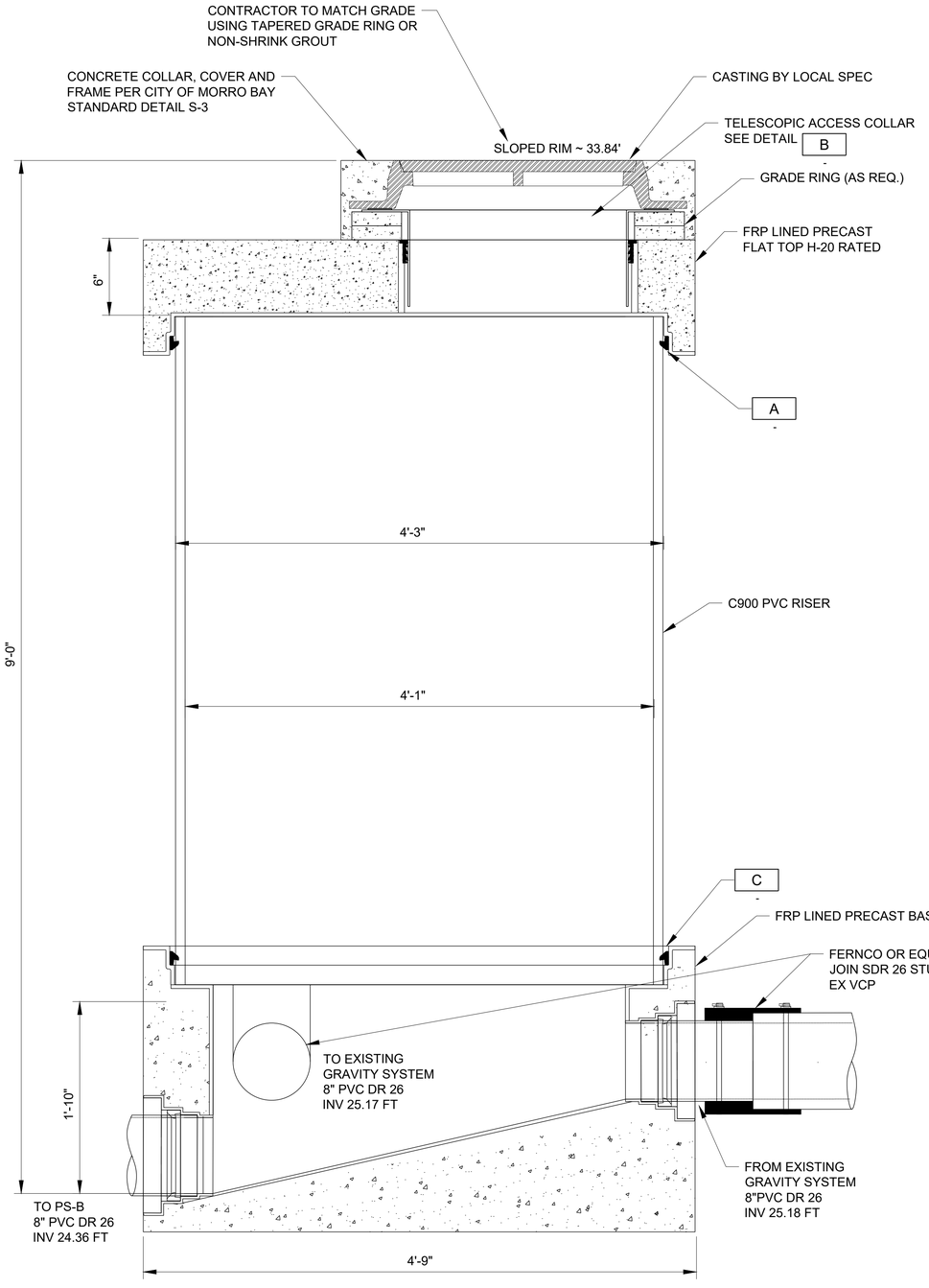

A SECTION
-- NTS

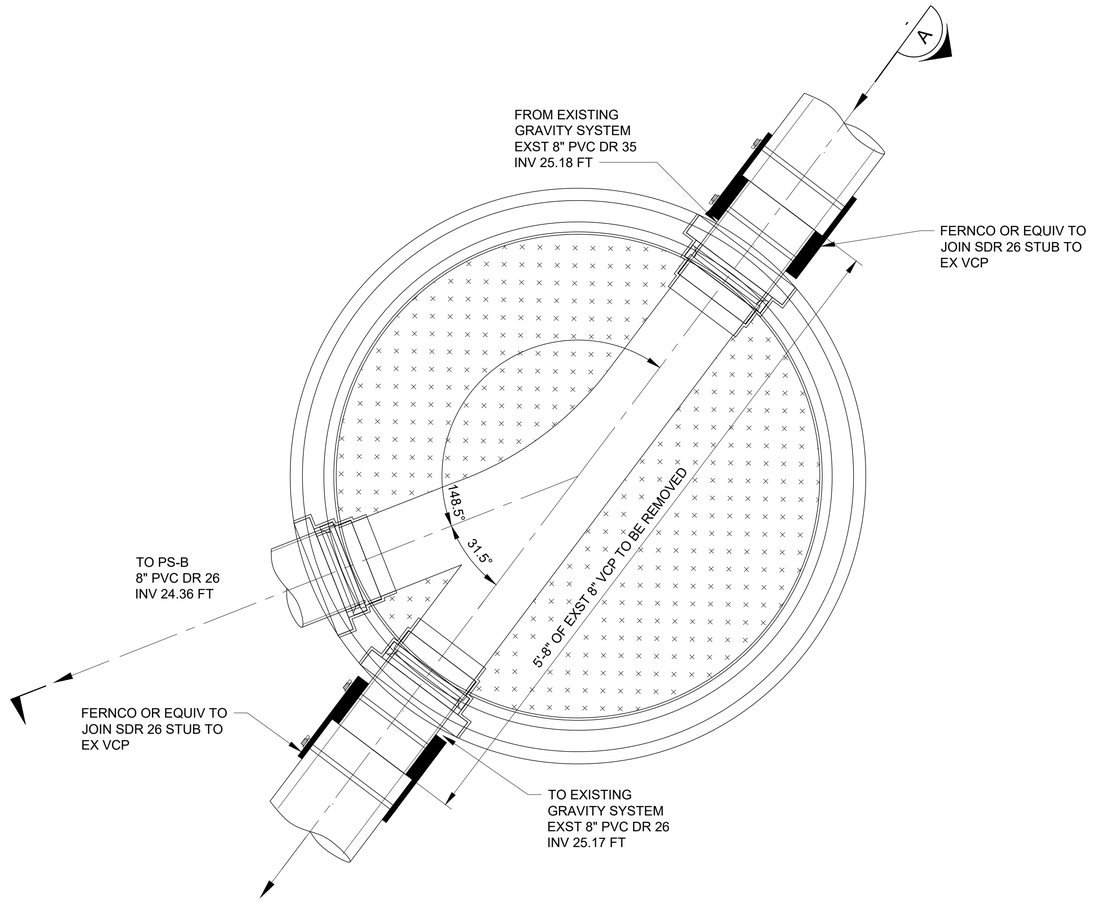

PS-B DIVERSION MANHOLE PLAN
NTS

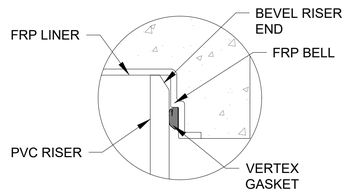

A JOINT DETAIL
- NTS

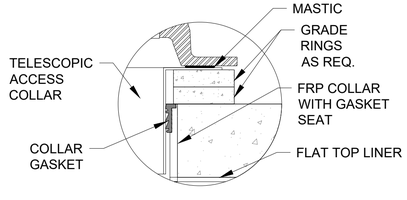

B JOINT DETAIL
- NTS

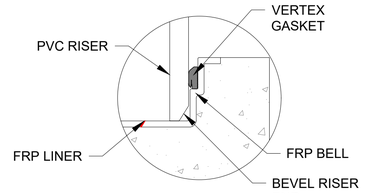

C JOINT DETAIL
- NTS



05/29/2020

DESIGN	K ALACON
DRAWN	K ALACON
CHECKED	M FISHER
APPROVED	M FISHER

WATERWORKS ENGINEERS
2260 Douglas Blvd, Suite 105 • Roseville, CA 95661 • 916-780-2888

CITY OF MORRO BAY
WATER RECLAMATION FACILITY
LIFT STATION AND OFFSITE PIPELINES

CIVIL
PS-B DIVERSION MANHOLE DETAILS

DATE	MAY 2020
PROJECT NUMBER	17-082
DRAWING NUMBER	20-Y-4
SHEET NUMBER	159

L:\CADIPROJECTS\17-082 MORRO BAY PS AND PIPELINE_(S)\PROJECT FILES\DELIVERABLES\1782D-20Y200.DWG

JOB NUMBER: 14-010 FILENAME: 1782D-20Y200.DWG PLOT DATE: 11-Jun-20 PLOT TIME: 09:55:22

CONFORMED SET - DEC 2020

NOTES:

1. RENDERING IS FOR INFORMATIONAL PURPOSES ONLY. NOT FOR CONSTRUCTION.

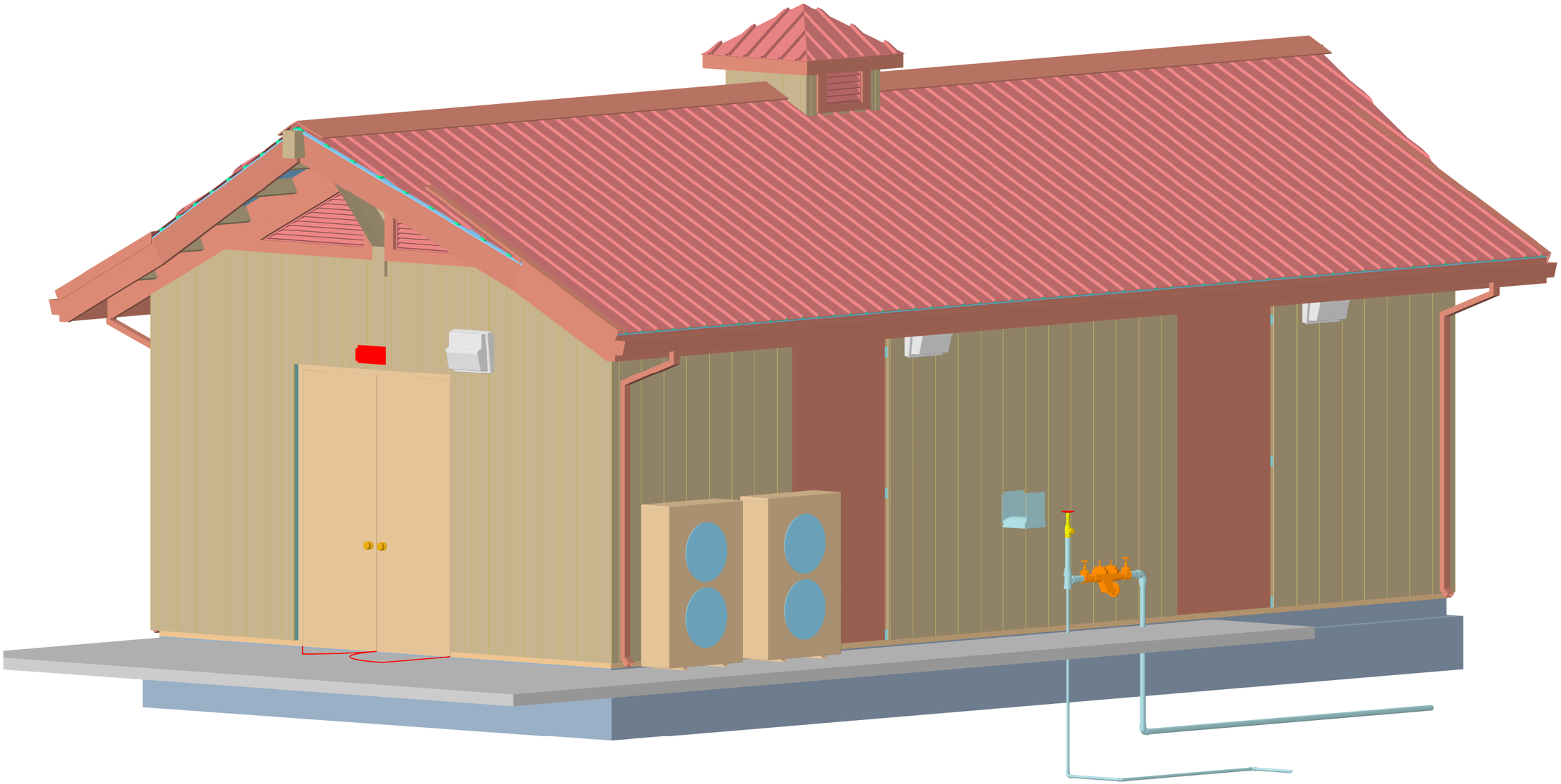

RENDERING
NTS

DESIGNED K ALACON
DRAWN J MARTIN
CHECKED K ALACON
APPROVED M FISHER

WATERWORKS ENGINEERS
2290 Douglas Blvd., Suite 105 • Roseville, CA 95661 • 916-780-2888

CITY OF MORRO BAY
WATER RECLAMATION FACILITY
LIFT STATIONS AND OFFSITE PIPELINES

RENDERING
ELECTRICAL BUILDING RENDERING

REGISTERED PROFESSIONAL ENGINEER
KATRINA P. ALACON
No. C70952
CIVIL
STATE OF CALIFORNIA
05-29-2020

DATE
MAY 2020
PROJECT NUMBER
17-082
DRAWING NUMBER
20-R-1
SHEET NUMBER 160

FILENAME: 1782D-20R801.DGN PLOT DATE: 5/28/2020 12:23:16 PM

CONFORMED SET - DEC 2020

NOTES:

1. RENDERINGS ARE FOR INFORMATIONAL PURPOSES ONLY. NOT FOR CONSTRUCTION.

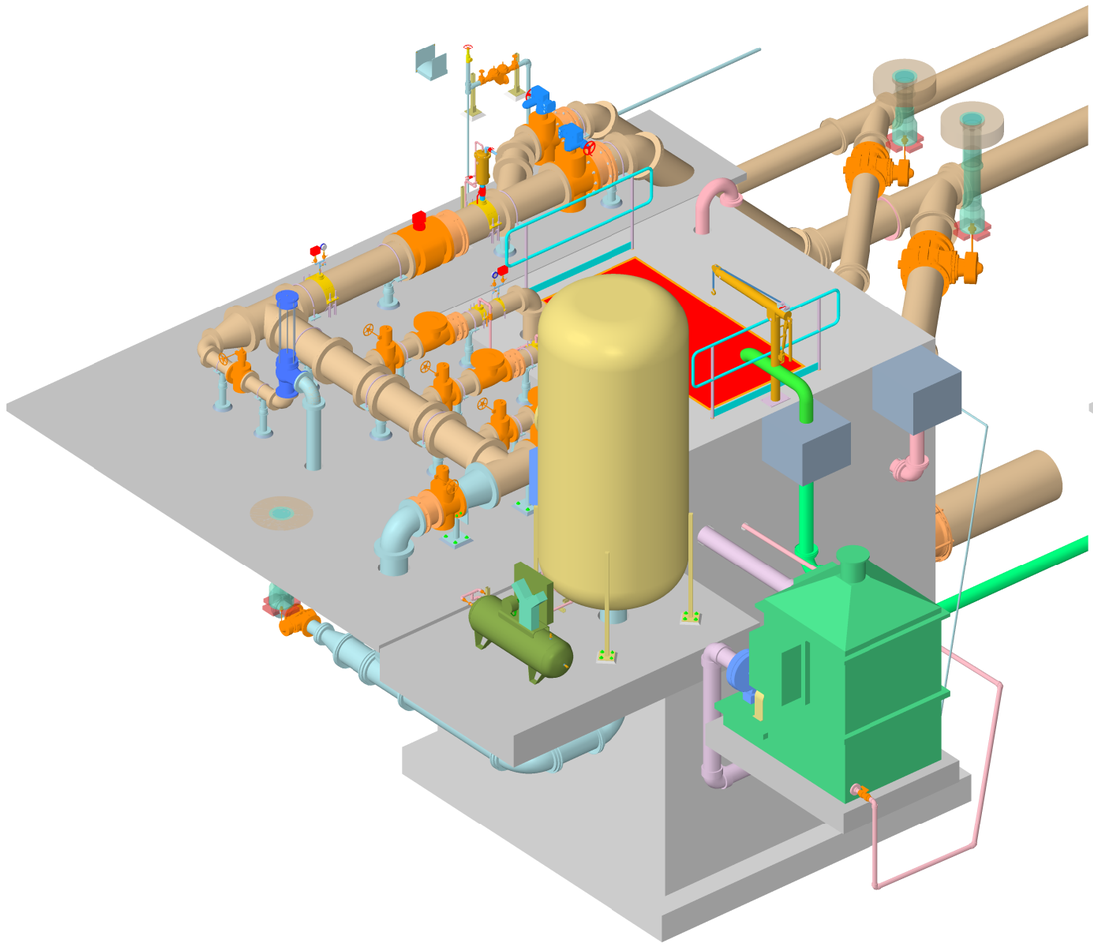

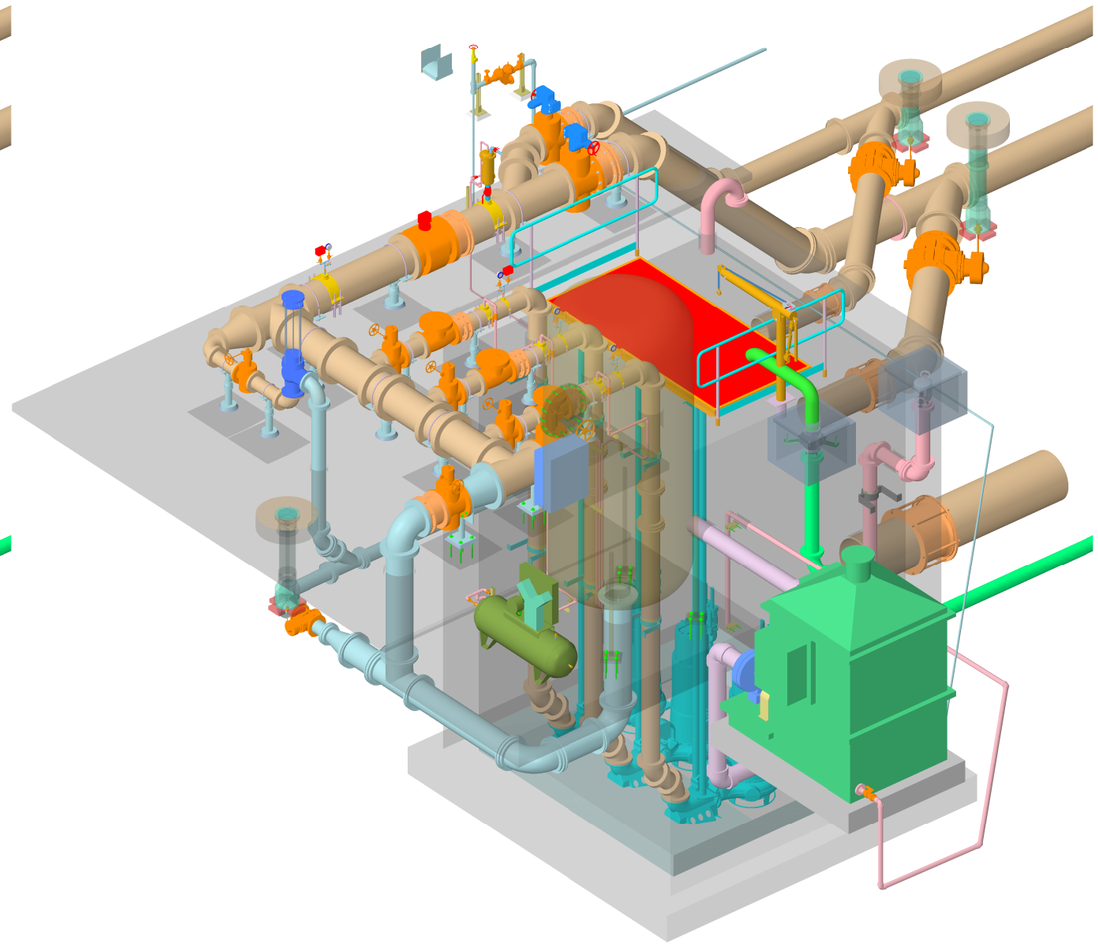

RENDERINGS
NTS

DESIGNED K ALACON
DRAWN J MARTIN
CHECKED K ALACON
APPROVED M FISHER

WATERWORKS ENGINEERS
2260 Douglas Blvd., Suite 105 • Roseville, CA 95661 • 916-780-2888

CITY OF MORRO BAY
WATER RECLAMATION FACILITY
LIFT STATIONS AND OFFSITE PIPELINES

RENDERING
PUMP STATION RENDERINGS

REGISTERED PROFESSIONAL ENGINEER
KRISTINA P. ALACON
No. C70952
CIVIL
STATE OF CALIFORNIA
05-29-2020

DATE
MAY 2020
PROJECT NUMBER
17-082
DRAWING NUMBER
20-R-2
SHEET NUMBER 161

FILENAME: 1782D-20R802.DGN PLOT DATE: 5/28/2020 12:27:20 PM

CONFORMED SET - DEC 2020

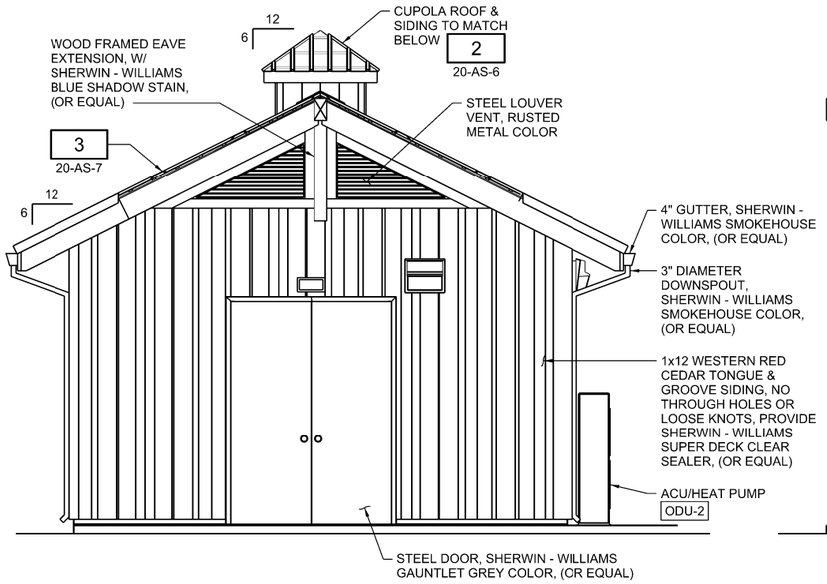

A NORTH ELEVATION
3/8" = 1'-0"
20-AS-2

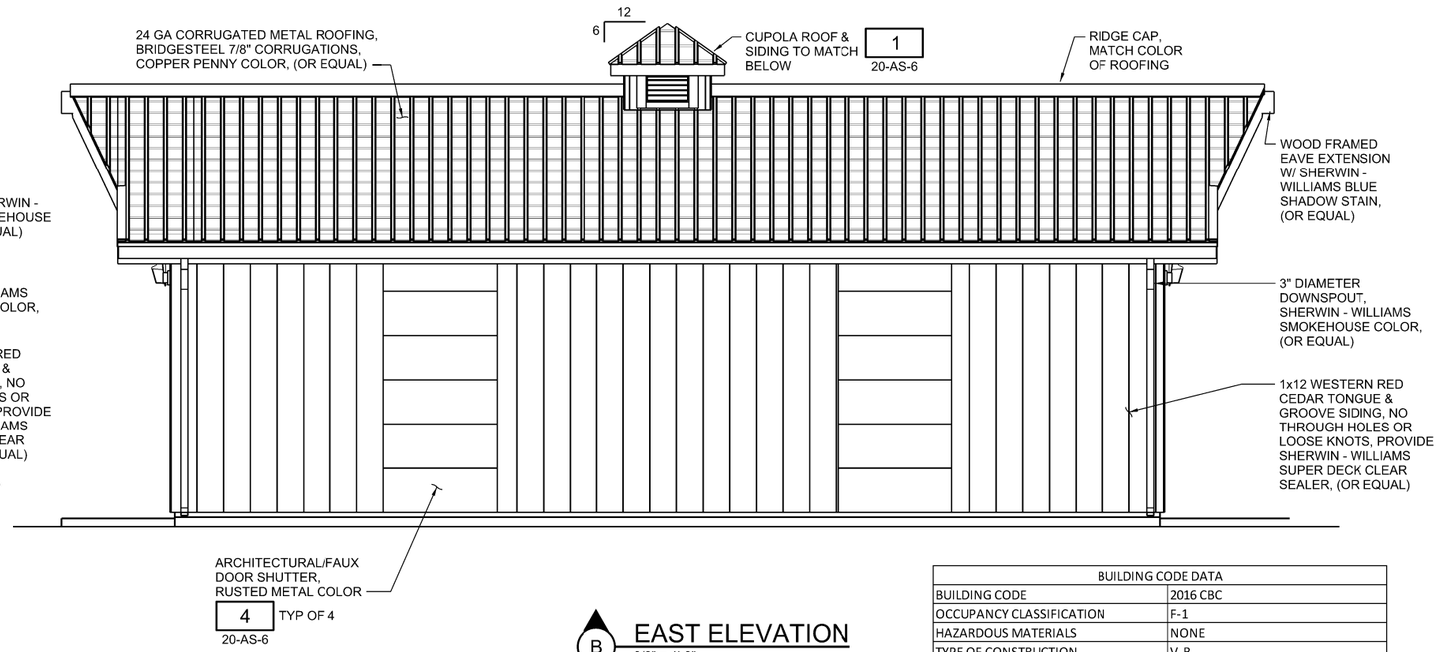

B EAST ELEVATION
3/8" = 1'-0"
20-AS-2

BUILDING CODE DATA	
BUILDING CODE	2016 CBC
OCCUPANCY CLASSIFICATION	F-1
HAZARDOUS MATERIALS	NONE
TYPE OF CONSTRUCTION	V-B
FIRE SUPRESSION	FIRE EXTINGUISHERS
NUMBER OF STORIES ABOVE GRADE	1 ACTUAL 1 ALLOWABLE (F-1 OCCUPANCY)
BUILDING HEIGHT ABOVE GRADE	17'-4" ACTUAL 40'-0" ALLOWABLE
BUILDING AREAS	533 SQFT
OCCUPANT LOAD FACTOR	100 SQFT/PERSON
OCCUPANT LOAD	5 PERSONS
TRAVEL DISTANCE	17'-4" MAX ACTUAL 175'-0" ALLOWABLE

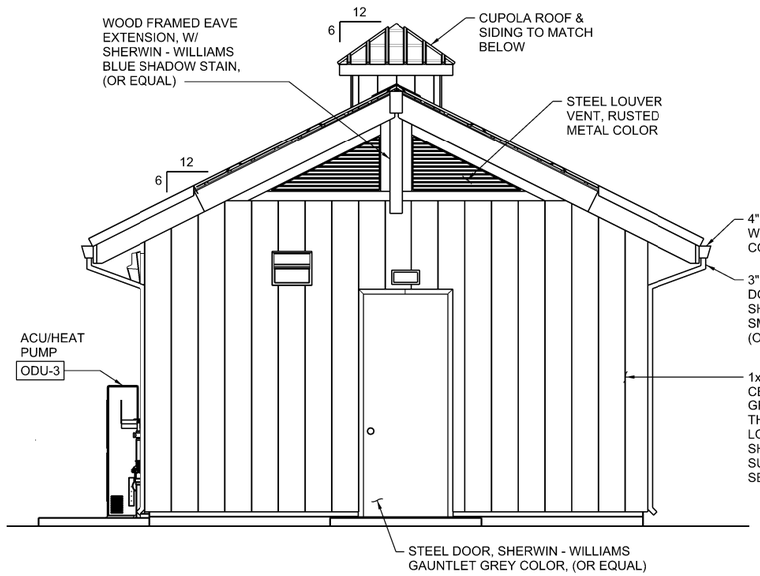

C SOUTH ELEVATION
3/8" = 1'-0"
20-AS-2

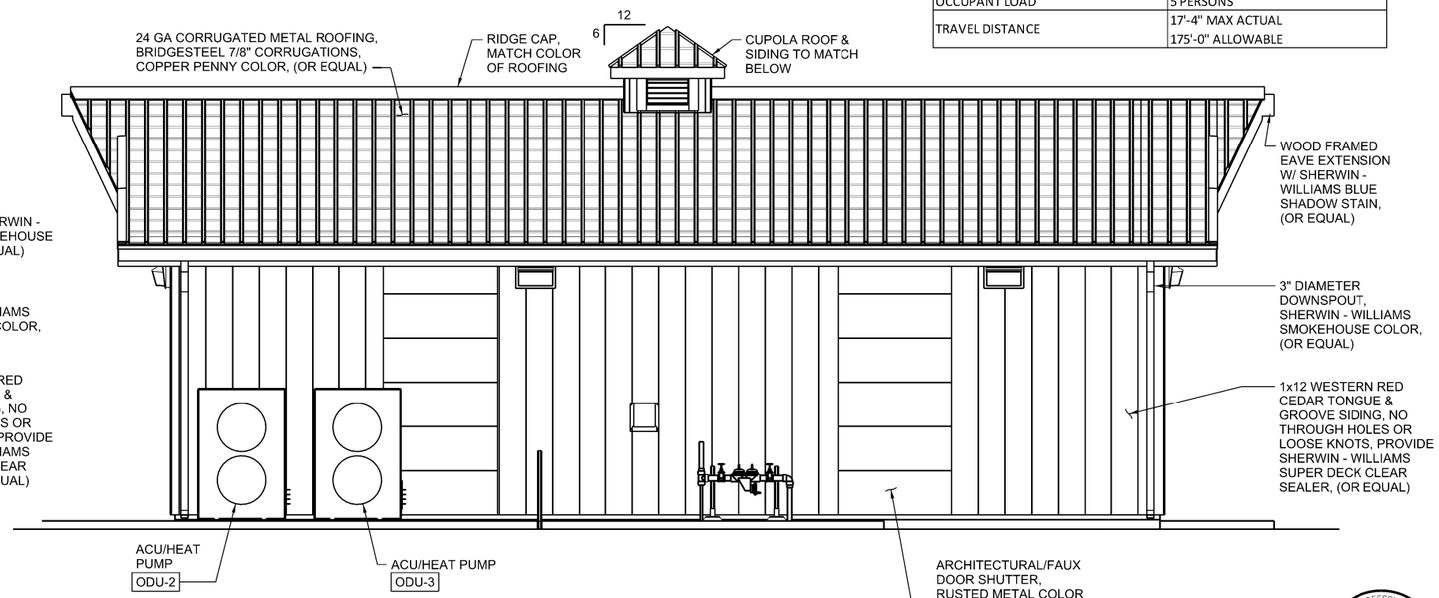

D WEST ELEVATION
3/8" = 1'-0"
20-AS-2

2 0 2 4 FEET
SCALE 3/8"=1'-0"

ANDREW L. LINDEMAN No. C88058 REGISTERED PROFESSIONAL ENGINEER CIVIL STATE OF CALIFORNIA
05-29-2020

DESIGNED A LINDEMAN
DRAWN J MARTIN
CHECKED J KELLOGG
APPROVED M FISHER

WATERWORKS ENGINEERS
2290 Douglas Blvd., Suite 105 • Roseville, CA 95661 • 916-780-2888

CITY OF MORRO BAY
WATER RECLAMATION FACILITY
LIFT STATIONS AND OFFSITE PIPELINES

ARCHITECTURAL / STRUCTURAL

PUMP STATION B ELECTRICAL BUILDING ELEVATIONS

DATE MAY 2020
PROJECT NUMBER 17-082
DRAWING NUMBER 20-AS-1
SHEET NUMBER 162

FILENAME: 1782D-20AS401.DGN PLOT DATE: 5/28/2020 12:14:29 PM

CONFORMED SET - DEC 2020

NOTES:

1. SEE DWG G-6 FOR DOOR SCHEDULE.

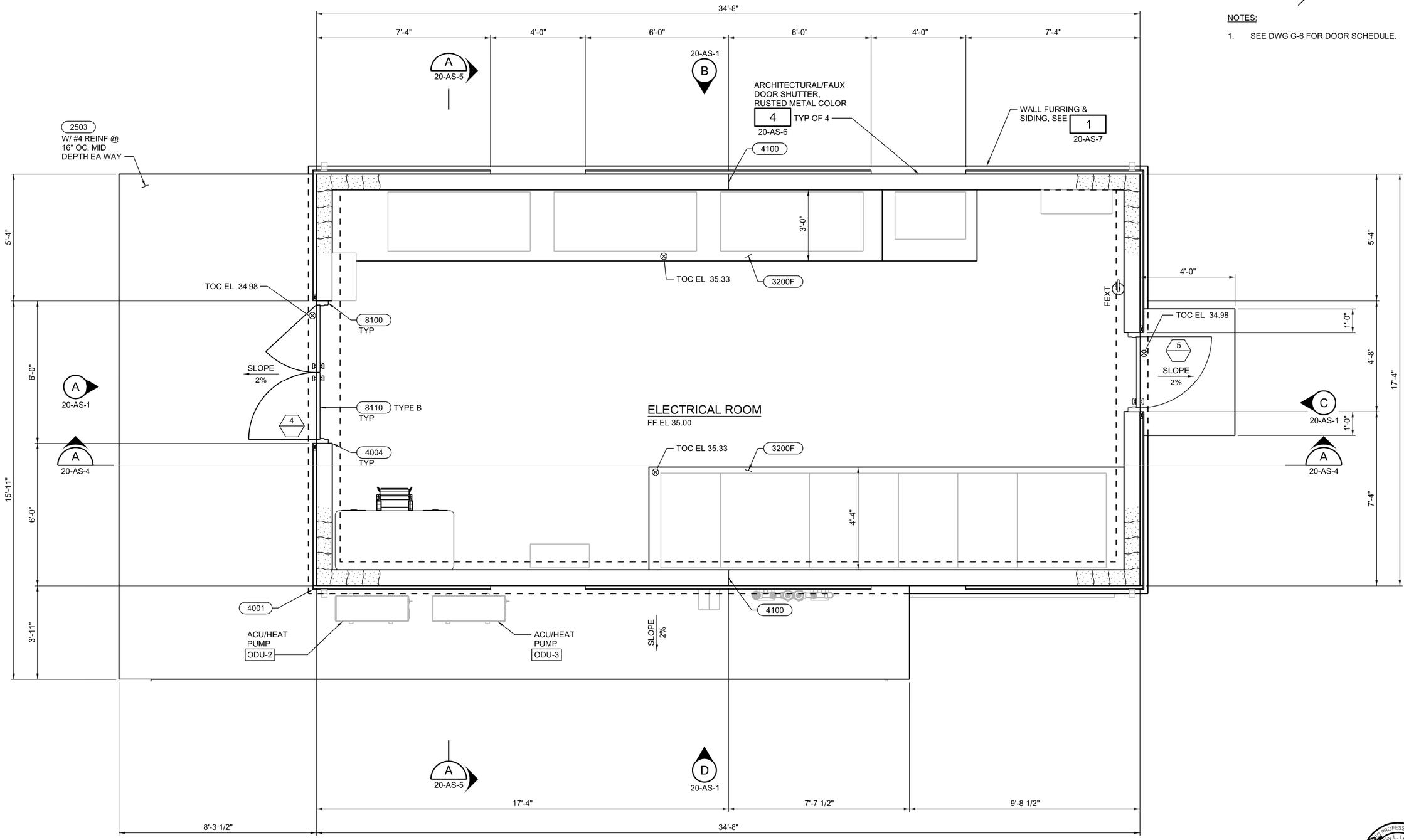

PUMP STATION A ELECTRICAL BUILDING FLOOR PLAN

1/2" = 1'-0"

2 0 2 4 FEET

SCALE 1/2"=1'-0"

DESIGNED A LINDEMAN
DRAWN J MARTIN
CHECKED J KELLOGG
APPROVED M FISHER

WATERWORKS ENGINEERS
2280 Douglas Blvd., Suite 105 • Roseville, CA 95661 • 916-780-2888

CITY OF MORRO BAY
WATER RECLAMATION FACILITY
LIFT STATIONS AND OFFSITE PIPELINES

ARCHITECTURAL / STRUCTURAL

PUMP STATION B ELECTRICAL BUILDING PLAN

REGISTERED PROFESSIONAL ENGINEER
ARMEN L. LINDEMAN
No. C88058
CIVIL
STATE OF CALIFORNIA
35-29-2020

DATE MAY 2020
PROJECT NUMBER 17-082
DRAWING NUMBER 20-AS-2
SHEET NUMBER 163

FILENAME: 1782D-20AS101.DGN PLOT DATE: 5/28/2020 11:49:02 AM

CONFORMED SET - DEC 2020

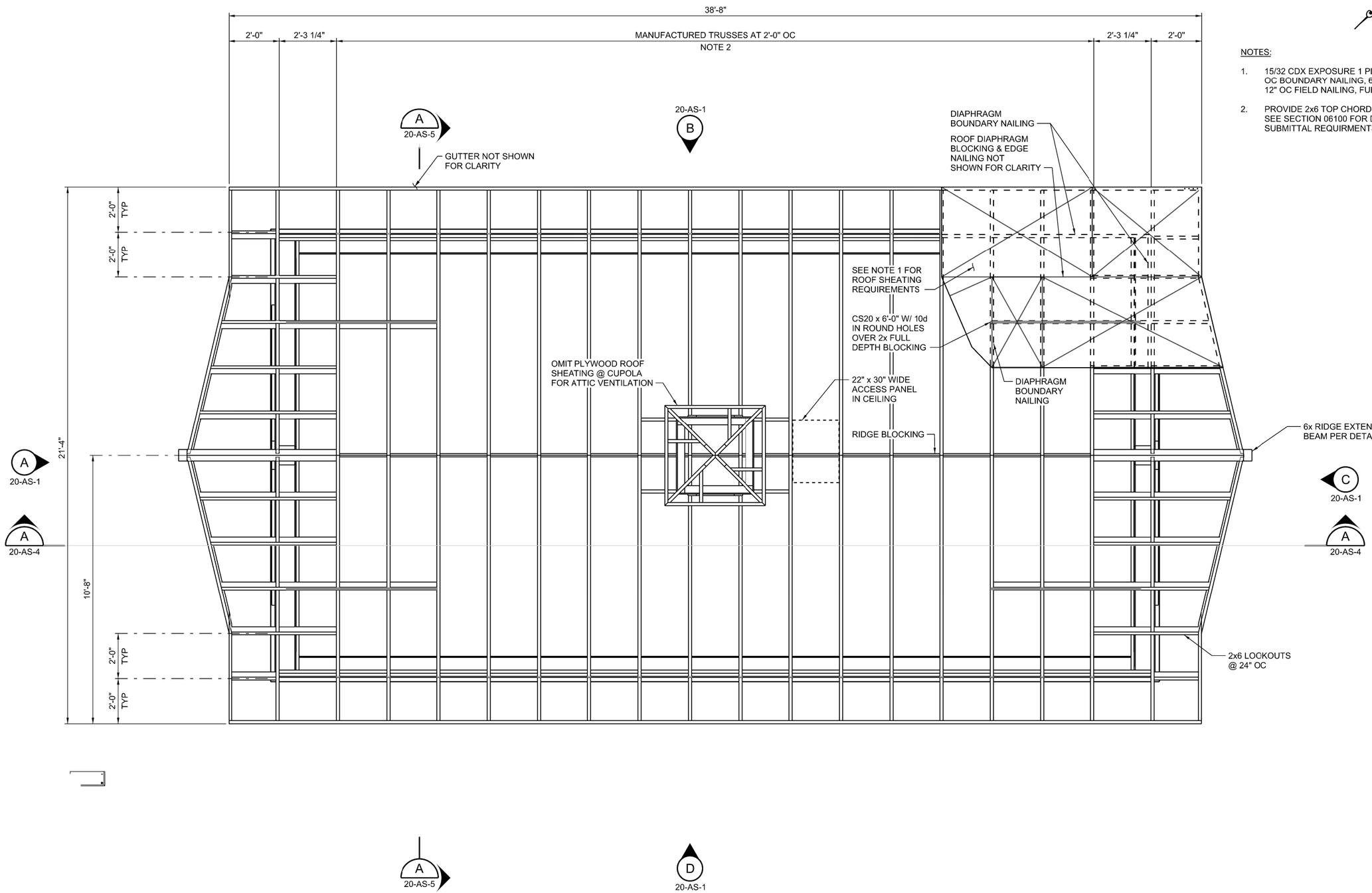

NOTES:

1. 15/32 CDX EXPOSURE 1 PLYWOOD WITH 10d @ 4" OC BOUNDARY NAILING, 6" OC EDGE NAILING & 12" OC FIELD NAILING, FULLY BLOCKED.
2. PROVIDE 2x6 TOP CHORD AT WOOD TRUSSES. SEE SECTION 06100 FOR DESIGN CRITERIA AND SUBMITTAL REQUIRMENTS.

PUMP STATION B ROOF FRAMING PLAN

1/2" = 1'-0"

2 0 2 4 FEET
SCALE 1/2"=1'-0"

DESIGNED A LINDEMAN
DRAWN J MARTIN
CHECKED J KELLOGG
APPROVED M FISHER

WATERWORKS ENGINEERS
2280 Douglas Blvd., Suite 105 • Roseville, CA 95661 • 916-780-2888

CITY OF MORRO BAY
WATER RECLAMATION FACILITY
LIFT STATIONS AND OFFSITE PIPELINES

ARCHITECTURAL / STRUCTURAL

PUMP STATION B
ELECTRICAL BUILDING
ROOF FRAMING PLAN

REGISTERED PROFESSIONAL ENGINEER
ANDREW L. LINDEMAN
No. C88058
CIVIL
STATE OF CALIFORNIA
05-29-2020

DATE: MAY 2020
PROJECT NUMBER: 17-082
DRAWING NUMBER: 20-AS-3
SHEET NUMBER: 164

CONFORMED SET - DEC 2020

NOTES:

1. INSTALL EDGE TRIM WHERE GYPSUM WALL BOARD ABUTS ANOTHER MATERIAL AT WALLS AND CEILING. PROVIDE JOINT SEALANT BETWEEN TRIM AND OTHER MATERIAL PRIOR TO PAINTING.

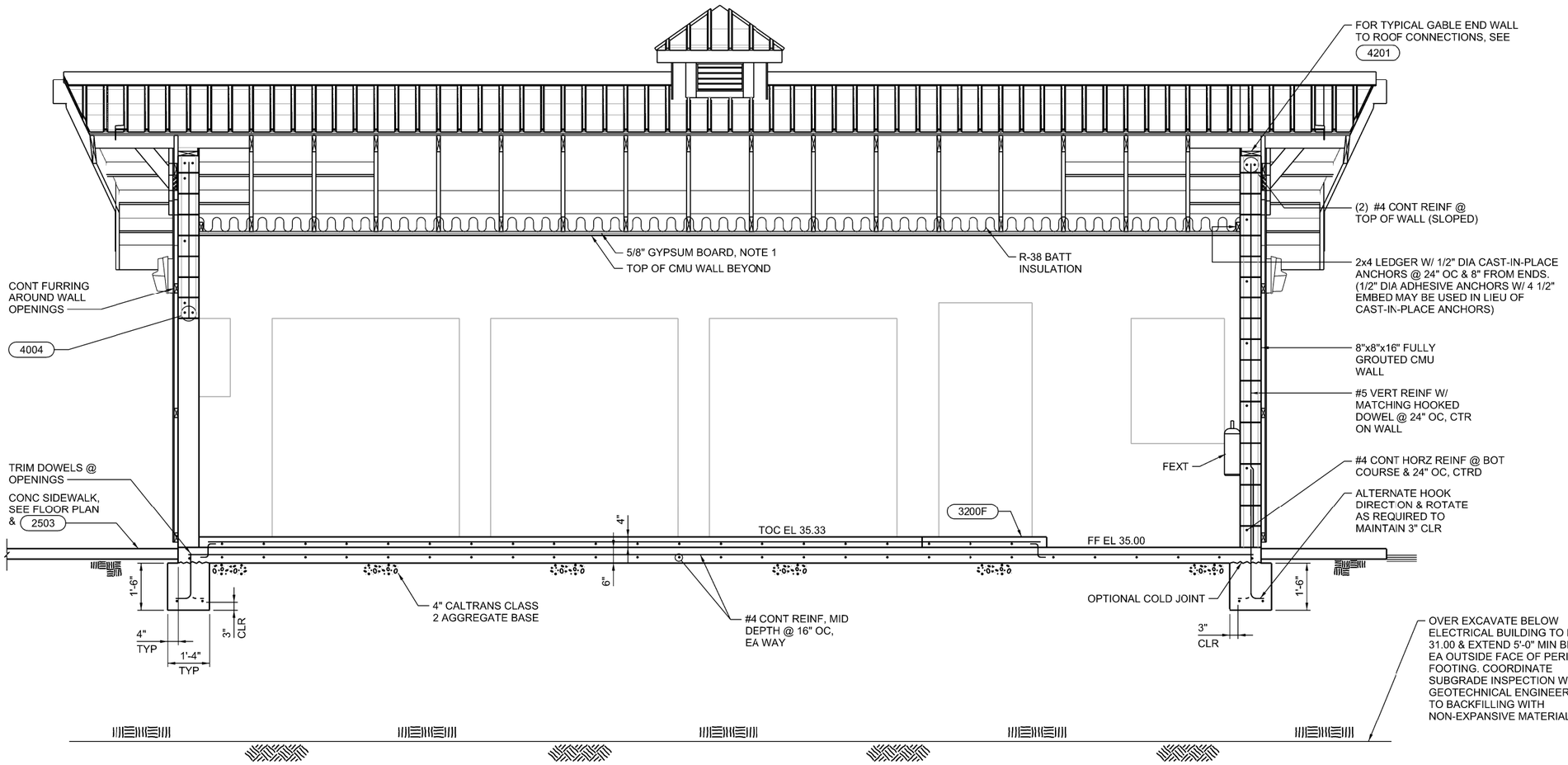

A SECTION
20-AS-2 20-AS-3 1/2" = 1'-0"

2 0 2 4 FEET
SCALE 1/2"=1'-0"

REGISTERED PROFESSIONAL ENGINEER
ANDREW L. LINDEMAN
No. C88058
CIVIL
STATE OF CALIFORNIA
05-29-2020

DESIGNED A LINDEMAN
DRAWN J MARTIN
CHECKED J KELLOGG
APPROVED M FISHER

WATERWORKS ENGINEERS
2280 Douglas Blvd., Suite 105 • Roseville, CA 95661 • 916-780-2888

CITY OF MORRO BAY
WATER RECLAMATION FACILITY
LIFT STATIONS AND OFFSITE PIPELINES

ARCHITECTURAL / STRUCTURAL
PUMP STATION B
ELECTRICAL BUILDING
SECTION

DATE MAY 2020
PROJECT NUMBER 17-082
DRAWING NUMBER 20-AS-4
SHEET NUMBER 165

FILENAME: 1782D-20AS201.DGN PLOT DATE: 5/28/2020 11:57:51 AM

CONFORMED SET - DEC 2020

NOTES:

1. INSTALL EDGE TRIM WHERE GYPSUM WALL BOARD ABUTS ANOTHER MATERIAL AT WALLS AND CEILING. PROVIDE JOINT SEALANT BETWEEN TRIM AND OTHER MATERIAL PRIOR TO PAINTING.

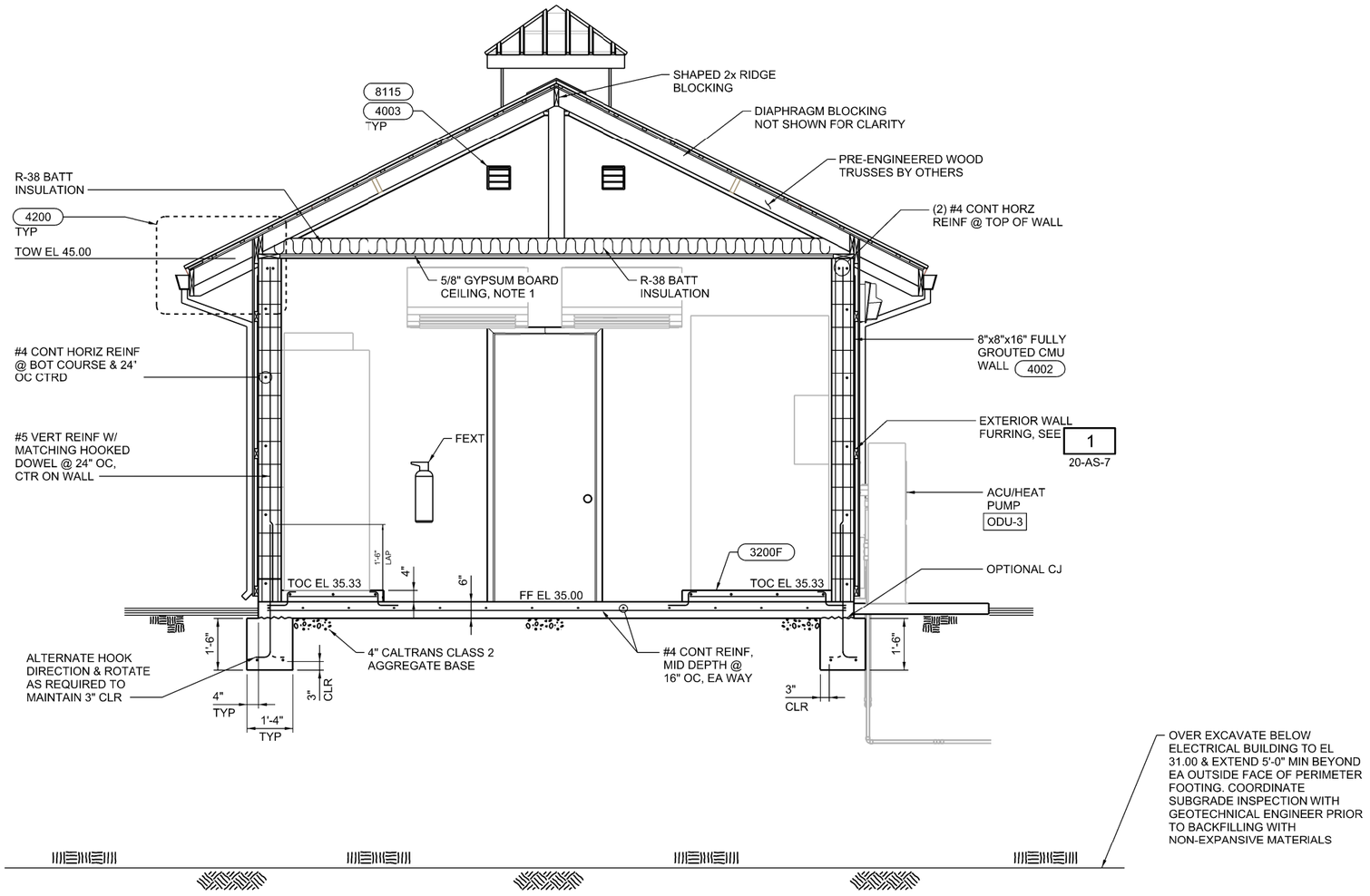

A SECTION
20-AS-2 1/2" = 1'-0"
20-AS-3

2 0 2 4 FEET
SCALE 1/2"=1'-0"

DESIGNED A LINDEMAN
DRAWN J MARTIN
CHECKED J KELLOGG
APPROVED M FISHER

WATERWORKS ENGINEERS
2290 Douglas Blvd., Suite 105 • Roseville, CA 95661 • 916-780-2888

CITY OF MORRO BAY
WATER RECLAMATION FACILITY
LIFT STATIONS AND OFFSITE PIPELINES

ARCHITECTURAL / STRUCTURAL
PUMP STATION B
ELECTRICAL BUILDING
SECTION

REGISTERED PROFESSIONAL ENGINEER ANDREW L. LINDEMAN No. C88058 CIVIL STATE OF CALIFORNIA
05-29-2020

DATE MAY 2020
PROJECT NUMBER 17-082
DRAWING NUMBER 20-AS-5
SHEET NUMBER 166

FILENAME: 1782D-20AS202.DGN PLOT DATE: 5/28/2020 12:01:13 PM

CONFORMED SET - DEC 2020

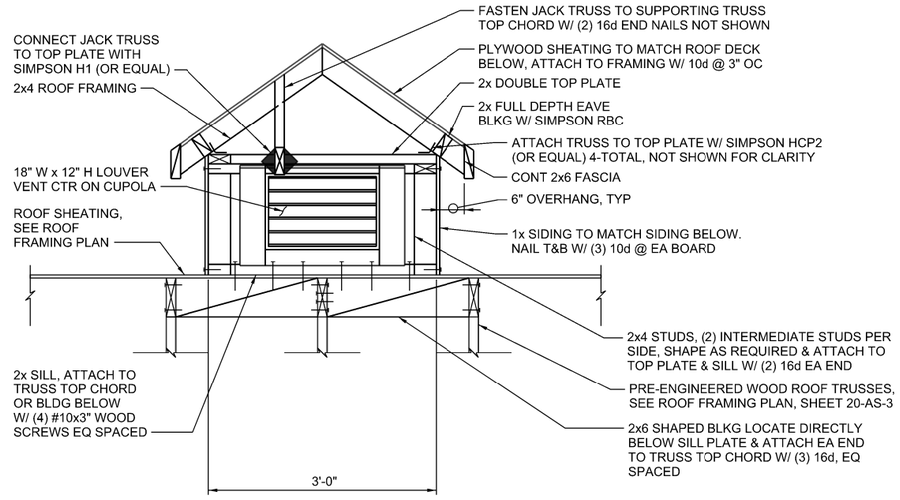

1 DETAIL
20-AS-1 1" = 1'-0"

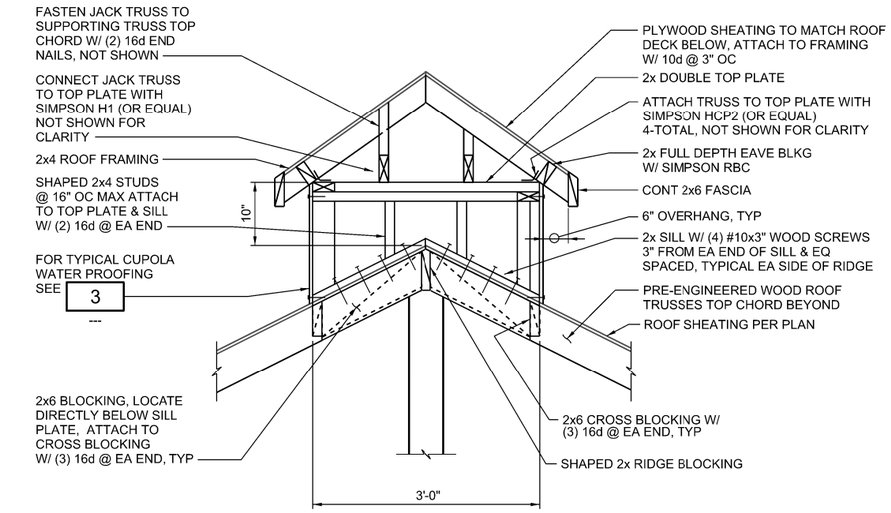

2 DETAIL
20-AS-1 1" = 1'-0"

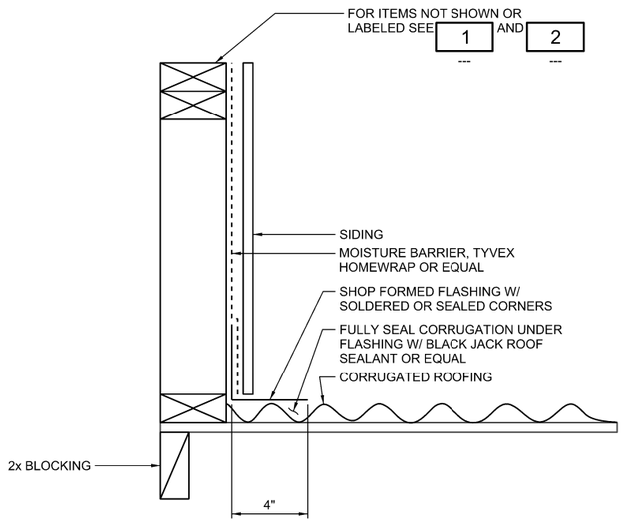

3 TYPICAL CUPOLA WATER PROOFING
--- 3" = 1'-0"

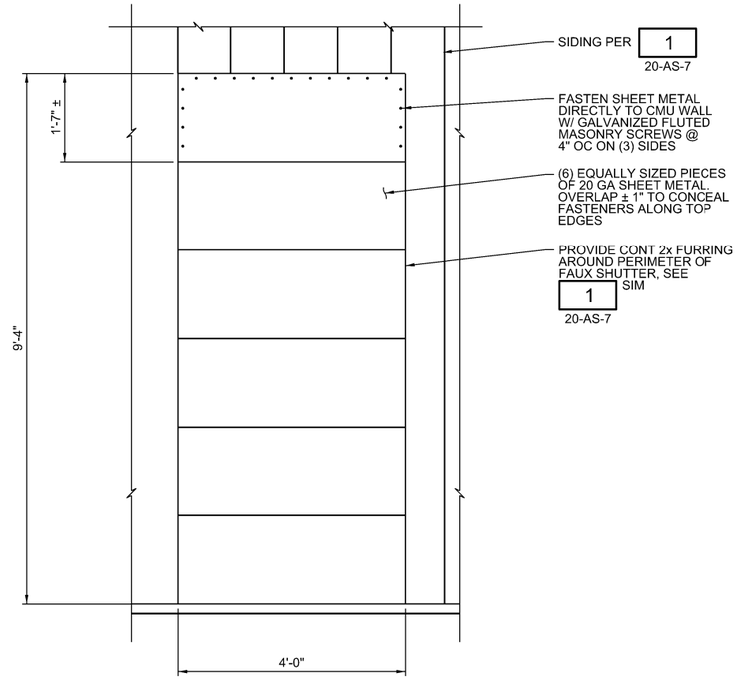

4 DETAIL
20-AS-1 3/4" = 1'-0"
20-AS-2

1 0 1 2 FEET
SCALE 3/4"=1'-0"
1 0 1 2 FEET
SCALE 1"=1'-0"
3" 0 3" 6" INCHES
SCALE 3"=1'-0"

REGISTERED PROFESSIONAL ENGINEER ANDREW L. LINDEMAN No. C88058 CIVIL STATE OF CALIFORNIA
05-29-2020

DESIGNED A LINDEMAN
DRAWN J MARTIN
CHECKED J KELLOGG
APPROVED M FISHER

WATERWORKS ENGINEERS

CITY OF MORRO BAY
WATER RECLAMATION FACILITY
LIFT STATIONS AND OFFSITE PIPELINES

ARCHITECTURAL / STRUCTURAL

PUMP STATION B
ELECTRICAL BUILDING
ARCHITECTURAL DETAILS

DATE MAY 2020
PROJECT NUMBER 17-082
DRAWING NUMBER 20-AS-6
SHEET NUMBER 167

FILENAME: 1782D-20AS301.DGN PLOT DATE: 5/28/2020 12:05:59 PM

CONFORMED SET - DEC 2020

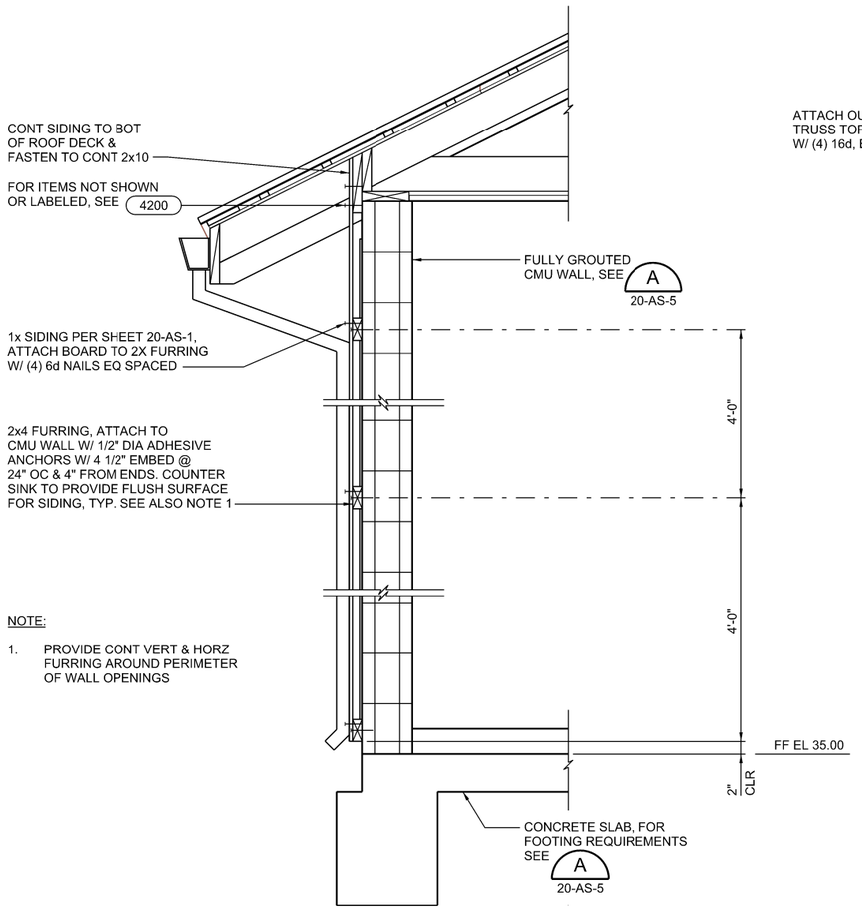

NOTE:

1. PROVIDE CONT VERT & HORZ FURRING AROUND PERIMETER OF WALL OPENINGS

1 EXTERIOR WALL FURRING DETAIL
20-AS-2 1" = 1'-0"

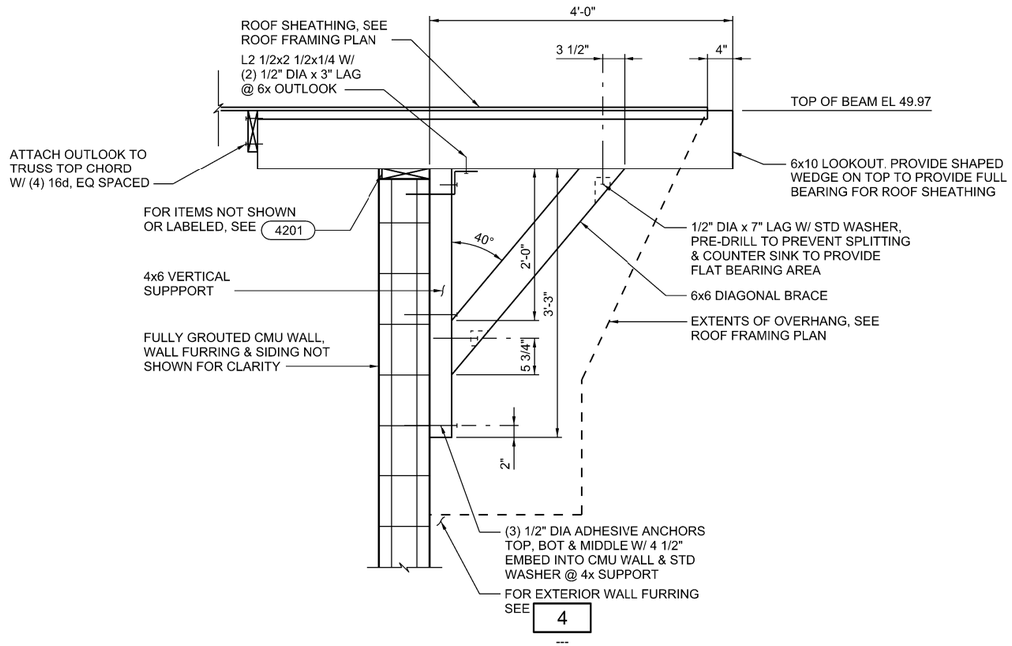

2 EXTENDED OVERHANG DETAIL
20-AS-3 1" = 1'-0"

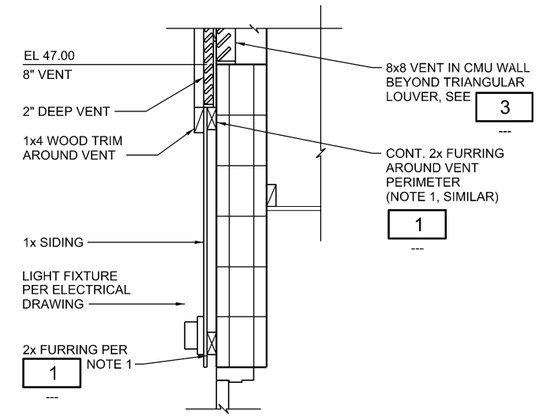

4 DETAIL
--- 1" = 1'-0"

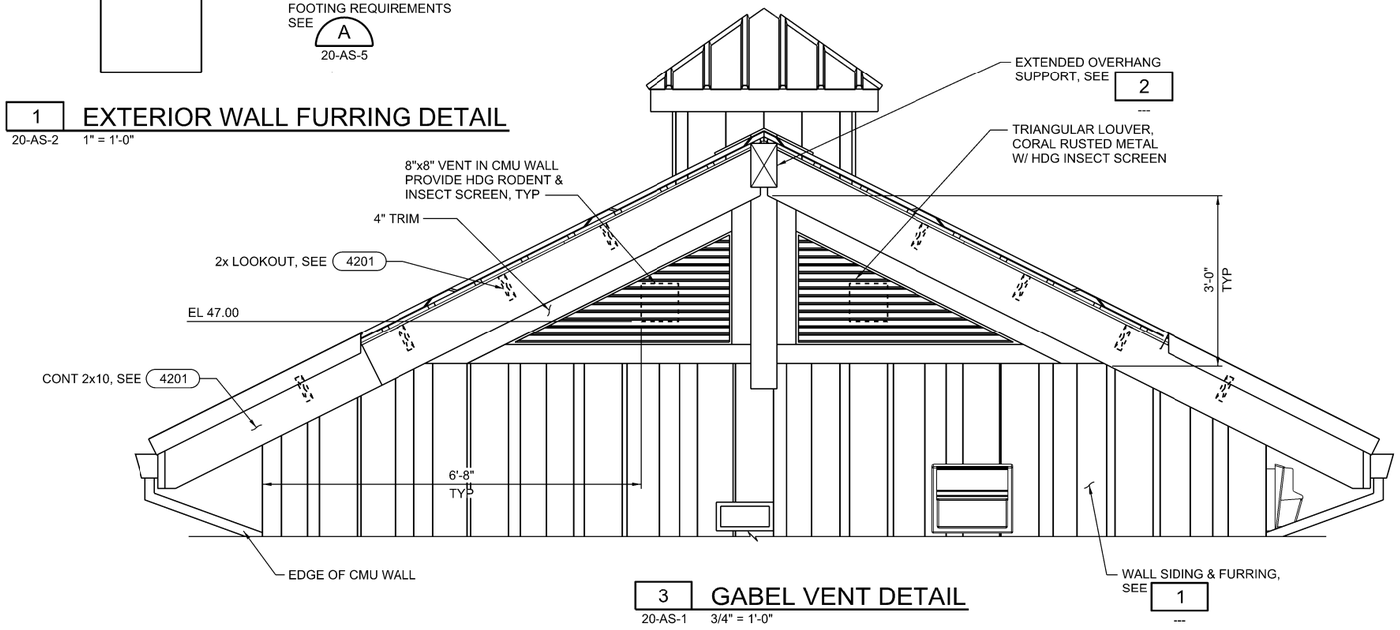

3 GABEL VENT DETAIL
20-AS-1 3/4" = 1'-0"

1 0 1 2 FEET
SCALE 3/4"=1'-0"
1 0 1 2 FEET
SCALE 1"=1'-0"

REGISTERED PROFESSIONAL ENGINEER
ANDREW L. LINDEMAN
No. C88058
CIVIL
STATE OF CALIFORNIA
05-29-2020

DESIGNED A LINDEMAN
DRAWN J MARTIN
CHECKED J KELLOGG
APPROVED M FISHER

WATERWORKS ENGINEERS
2280 Douglas Blvd., Suite 105 • Roseville, CA 95661 • 916-780-2888

CITY OF MORRO BAY
WATER RECLAMATION FACILITY
LIFT STATIONS AND OFFSITE PIPELINES

ARCHITECTURAL / STRUCTURAL
PUMP STATION B
ELECTRICAL BUILDING
ARCHITECTURAL DETAILS

DATE MAY 2020
PROJECT NUMBER 17-082
DRAWING NUMBER 20-AS-7
SHEET NUMBER 168

CONFORMED SET - DEC 2020

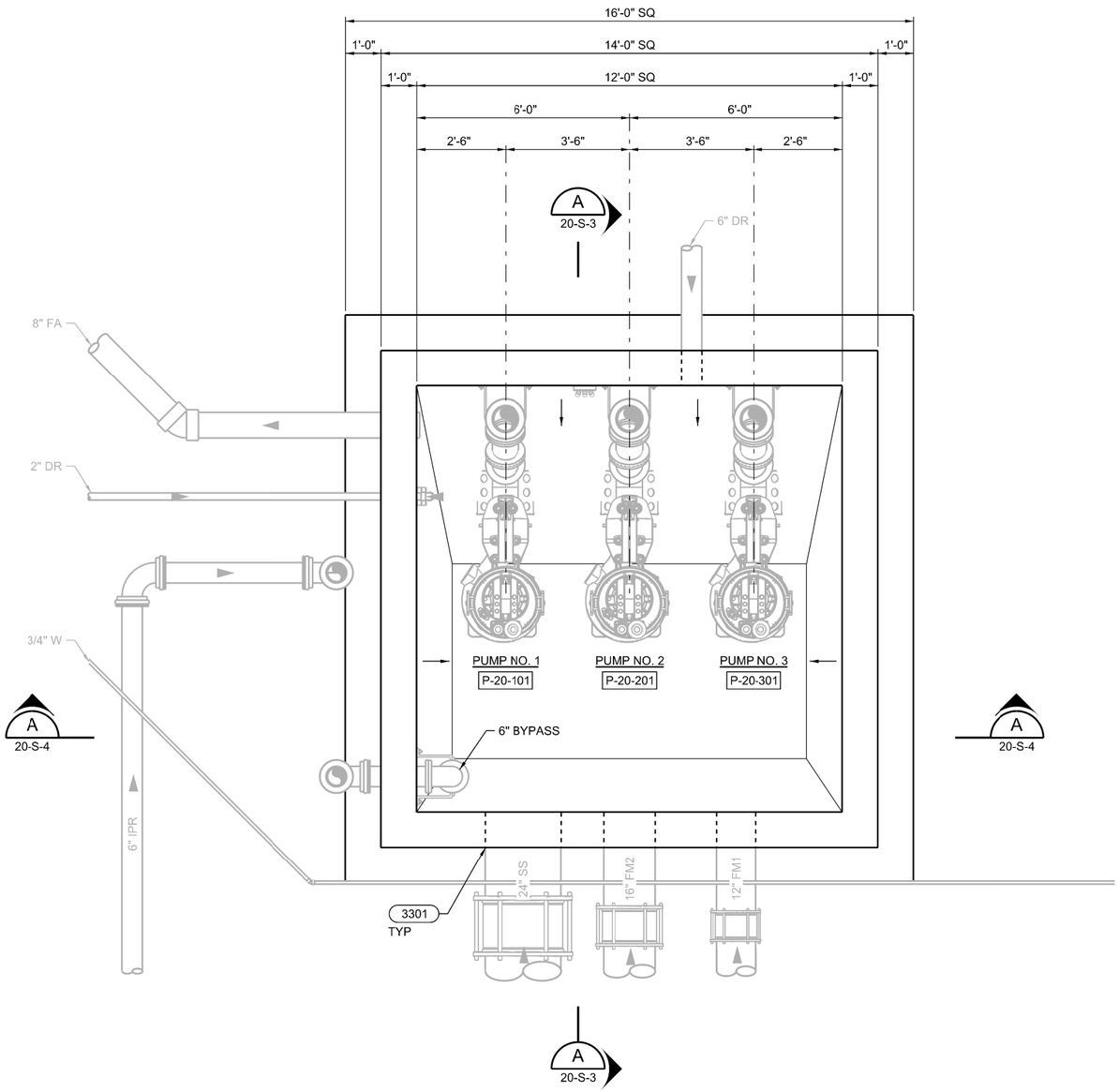

LOWER PLAN

1/2" = 1'-0"

NOTES:

1. PUMP STATION DESIGN IS BASED ON FLYGT PUMPS LISTED IN SPECIFICATION SECTION 11300.

2 0 2 4 FEET

SCALE 1/2"=1'-0"

DESIGNED A LINDEMAN
DRAWN J MARTIN
CHECKED J KELLOGG
APPROVED M FISHER

WATERWORKS ENGINEERS
2280 Douglas Blvd., Suite 105 • Roseville, CA 95661 • 916-780-2888

CITY OF MORRO BAY
WATER RECLAMATION FACILITY
LIFT STATIONS AND OFFSITE PIPELINES

STRUCTURAL
PUMP STATION
LOWER PLAN

REGISTERED PROFESSIONAL ENGINEER
ANDREW L. LINDEMAN
No. C88058
CIVIL
STATE OF CALIFORNIA
05-29-2020

DATE MAY 2020
PROJECT NUMBER 17-082
DRAWING NUMBER 20-S-1
SHEET NUMBER 169

FILENAME: 1782D-20S100.DGN PLOT DATE: 5/28/2020 12:35:16 PM

CONFORMED SET - DEC 2020

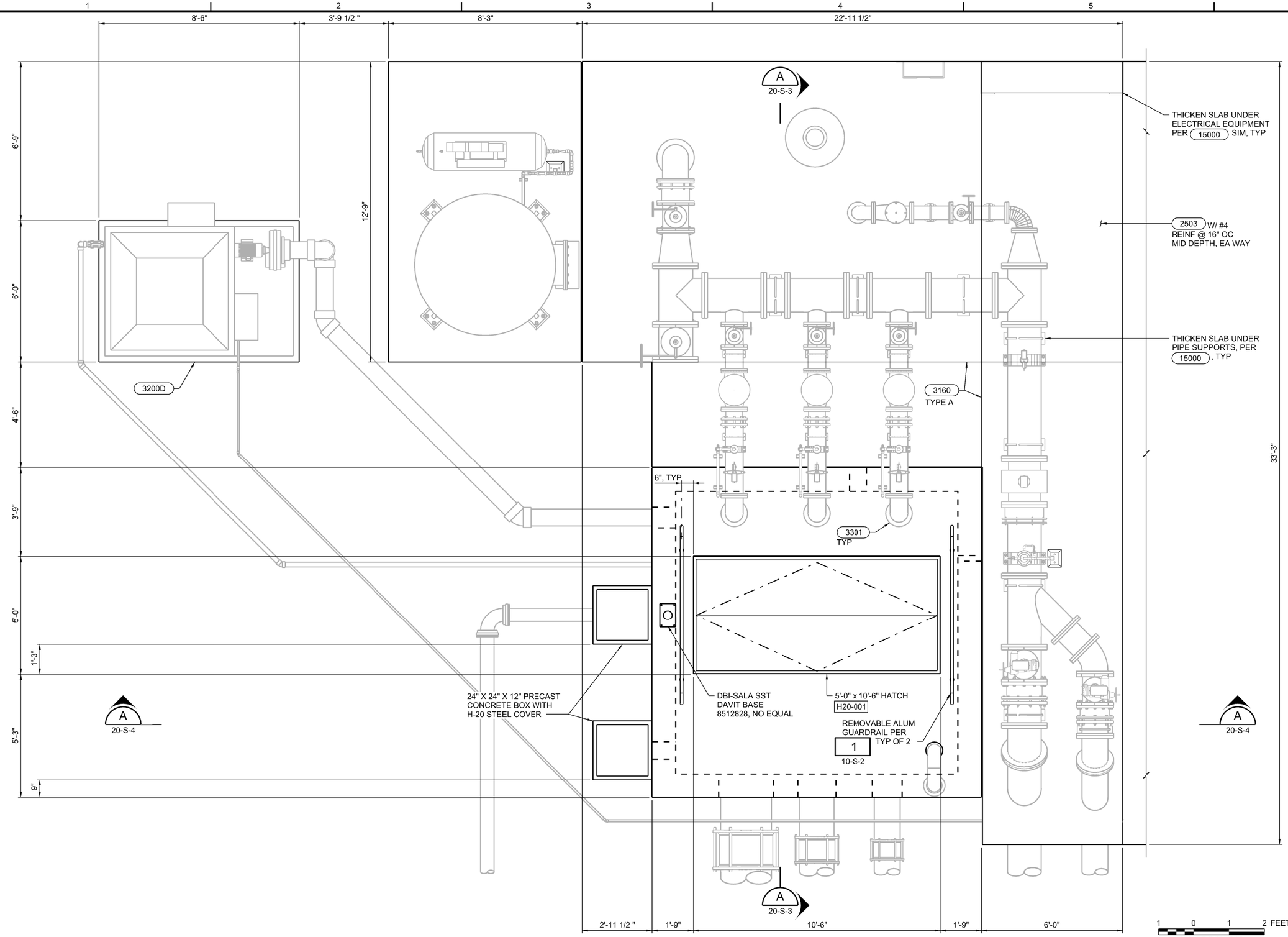

TOP PLAN

1/2" = 1'-0"

1 0 1 2 FEET
SCALE 3/4"=1'-0"

2 0 2 4 FEET
SCALE 1/2"=1'-0"

REGISTERED PROFESSIONAL ENGINEER
ANDREW L. LINDEMAN
No. C88058
CIVIL
STATE OF CALIFORNIA
05-29-2020

DESIGNED A LINDEMAN
DRAWN J MARTIN
CHECKED J KELLOGG
APPROVED M FISHER

WATERWORKS ENGINEERS
2280 Douglas Blvd., Suite 105 • Roseville, CA 95661 • 916-780-2888

CITY OF MORRO BAY
WATER RECLAMATION FACILITY
LIFT STATIONS AND OFFSITE PIPELINES

STRUCTURAL
PUMP STATION B
TOP PLAN

DATE MAY 2020
PROJECT NUMBER 17-082
DRAWING NUMBER 20-S-2
SHEET NUMBER 170

CONFORMED SET - DEC 2020

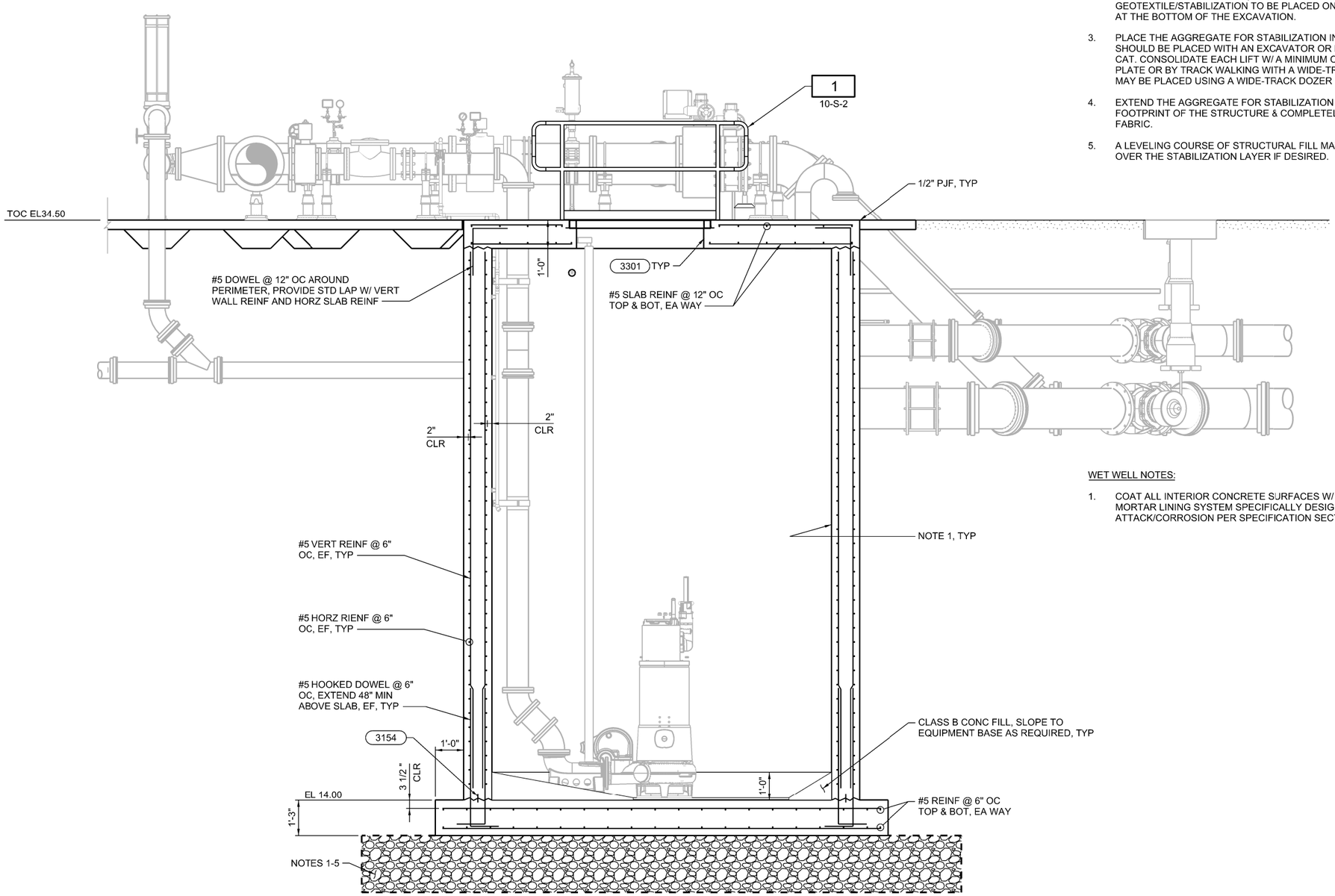

A SECTION
20-S-1
20-S-2
1/2" = 1'-0"

EXCAVATION/GRADING NOTES:

1. THE LOWER 4 FEET OF THE WET WELL EXCAVATION SHOULD BE PERFORMED WITH CAUTION, USING AN EXCAVATOR TYPE OF EQUIPMENT, AND SUCH THAT CONSTRUCTION EQUIPMENT WILL NOT TRAVERSE ACROSS THE BOTTOM CF THE EXCAVATION.
2. EXCAVATIONS FOR THE WET WELL SHOULD BE DEEPENED TO ALLOW AT LEAST 2 FEET OF CRUSHED ROCK (AGGREGATE FOR STABILIZATION) ENCASED IN A GEOTEXTILE/STABILIZATION TO BE PLACED ON THE UINDISTURBED SUBGRADE AT THE BOTTOM OF THE EXCAVATION.
3. PLACE THE AGGREGATE FOR STABILIZATION IN (2) 1 FOOT LIFTS. THE FIRST LIFT SHOULD BE PLACED WITH AN EXCAVATOR OR LIGHT EQUIPMENT SUCH AS A BOB CAT. CONSOLIDATE EACH LIFT W/ A MINIMUM OF (4) PASSES WITH A VIBRATORY PLATE OR BY TRACK WALKING WITH A WIDE-TRACKED DOZER. THE SECOND LIFT MAY BE PLACED USING A WIDE-TRACK DOZER OR SIMILAR EQUIPMENT.
4. EXTEND THE AGGREGATE FOR STABILIZATION 3 FEET MINIMUM BEYOND THE FOOTPRINT OF THE STRUCTURE & COMPLETELY ENCOMPASS WITH GEOTEXTILE FABRIC.
5. A LEVELING COURSE OF STRUCTURAL FILL MAY BE PLACED AND COMPACTED OVER THE STABILIZATION LAYER IF DESIRED.

WET WELL NOTES:

1. COAT ALL INTERIOR CONCRETE SURFACES W/ MULTI-COMPONENT RESIN-BASED MORTAR LINING SYSTEM SPECIFICALLY DESIGNED TO PROTECT FROM CHEMICAL ATTACK/CORROSION PER SPECIFICATION SECTION 09875.

2 0 2 4 FEET
SCALE 1/2"=1'-0"

REGISTERED PROFESSIONAL ENGINEER ANDREW L. LINDEMAN No. C88058 CIVIL STATE OF CALIFORNIA
05-29-2020

DESIGNED A LINDEMAN
DRAWN J MARTIN
CHECKED J KELLOGG
APPROVED M FISHER

WATERWORKS ENGINEERS

CITY OF MORRO BAY
WATER RECLAMATION FACILITY
LIFT STATIONS AND OFFSITE PIPELINES

STRUCTURAL
PUMP STATION SECTION

DATE MAY 2020
PROJECT NUMBER 17-082
DRAWING NUMBER 20-S-3
SHEET NUMBER 171

FILENAME: 1782D-20S201.DGN PLOT DATE: 5/28/2020 12:51:18 PM

CONFORMED SET - DEC 2020

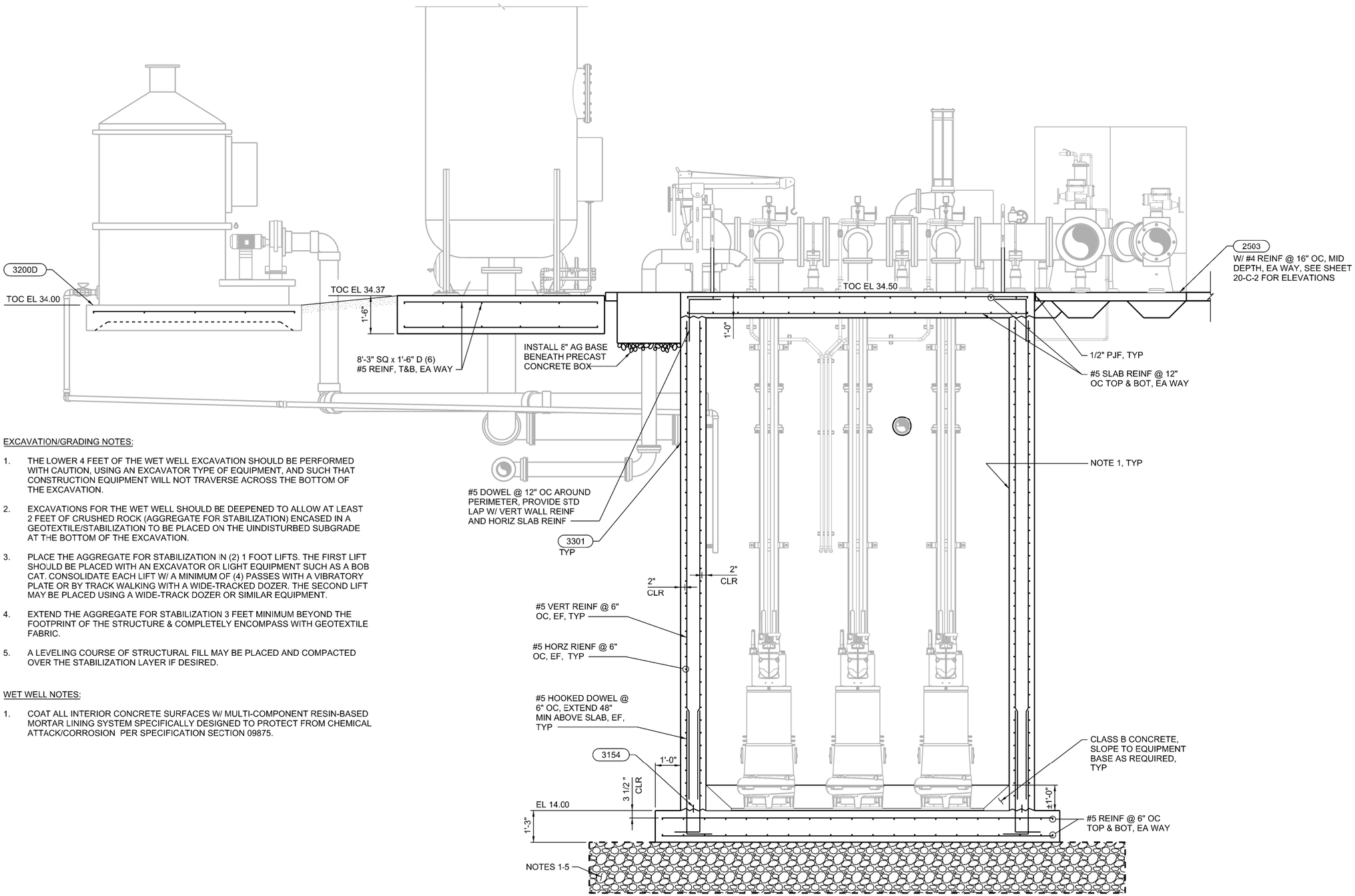

A SECTION
20-S-1
20-S-2
1/2" = 1'-0"

EXCAVATION/GRADING NOTES:

1. THE LOWER 4 FEET OF THE WET WELL EXCAVATION SHOULD BE PERFORMED WITH CAUTION, USING AN EXCAVATOR TYPE OF EQUIPMENT, AND SUCH THAT CONSTRUCTION EQUIPMENT WILL NOT TRAVERSE ACROSS THE BOTTOM OF THE EXCAVATION.
2. EXCAVATIONS FOR THE WET WELL SHOULD BE DEEPENED TO ALLOW AT LEAST 2 FEET OF CRUSHED ROCK (AGGREGATE FOR STABILIZATION) ENCASED IN A GEOTEXTILE/STABILIZATION TO BE PLACED ON THE UINDISTURBED SUBGRADE AT THE BOTTOM OF THE EXCAVATION.
3. PLACE THE AGGREGATE FOR STABILIZATION IN (2) 1 FOOT LIFTS. THE FIRST LIFT SHOULD BE PLACED WITH AN EXCAVATOR OR LIGHT EQUIPMENT SUCH AS A BOB CAT. CONSOLIDATE EACH LIFT W/ A MINIMUM OF (4) PASSES WITH A VIBRATORY PLATE OR BY TRACK WALKING WITH A WIDE-TRACKED DOZER. THE SECOND LIFT MAY BE PLACED USING A WIDE-TRACK DOZER OR SIMILAR EQUIPMENT.
4. EXTEND THE AGGREGATE FOR STABILIZATION 3 FEET MINIMUM BEYOND THE FOOTPRINT OF THE STRUCTURE & COMPLETELY ENCOMPASS WITH GEOTEXTILE FABRIC.
5. A LEVELING COURSE OF STRUCTURAL FILL MAY BE PLACED AND COMPACTED OVER THE STABILIZATION LAYER IF DESIRED.

WET WELL NOTES:

1. COAT ALL INTERIOR CONCRETE SURFACES W/ MULTI-COMPONENT RESIN-BASED MORTAR LINING SYSTEM SPECIFICALLY DESIGNED TO PROTECT FROM CHEMICAL ATTACK/CORROSION PER SPECIFICATION SECTION 09875.

2 0 2 4 FEET
SCALE 1/2"=1'-0"

DESIGNED A LINDEMAN
DRAWN J MARTIN
CHECKED J KELLOGG
APPROVED M FISHER

WATERWORKS ENGINEERS
2290 Douglas Blvd., Suite 105 • Roseville, CA 95661 • 916-780-2888

CITY OF MORRO BAY
WATER RECLAMATION FACILITY
LIFT STATIONS AND OFFSITE PIPELINES

MECHANICAL
PUMP STATION SECTION

REGISTERED PROFESSIONAL ENGINEER
ANDREW L. LINDEMAN
No. C88058
CIVIL
STATE OF CALIFORNIA
05-29-2020

DATE MAY 2020
PROJECT NUMBER 17-082
DRAWING NUMBER 20-S-4
SHEET NUMBER 172

FILENAME: 1782D-20S202.DGN PLOT DATE: 5/28/2020 12:56:53 PM

CONFORMED SET - DEC 2020

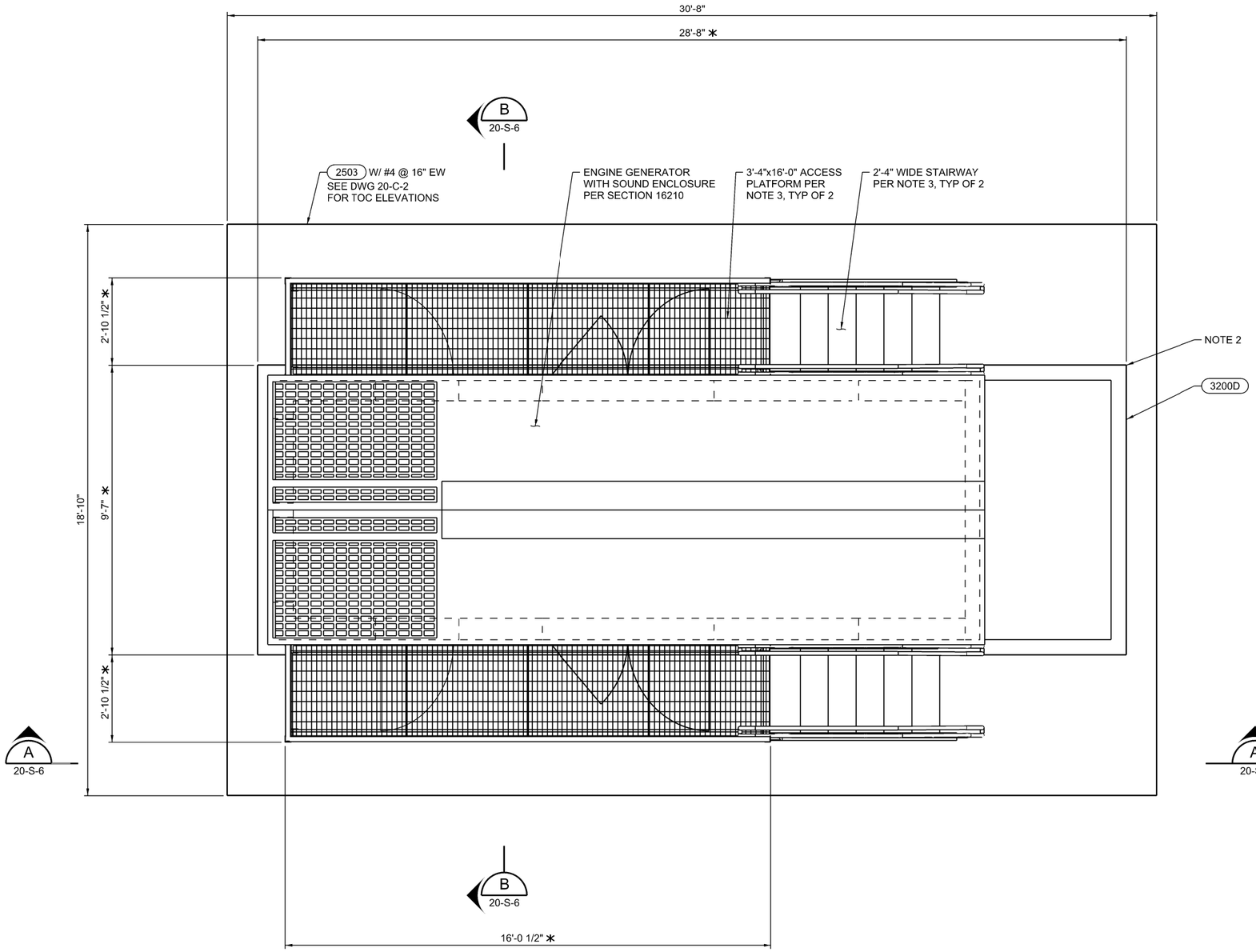

PLAN
1/2" = 1'-0"

NOTES:

1. GENERATOR SHOWN BASED ON KOHLER KD1000 SL2 GENERATOR WITH STATE CODE FUEL TANK. ACTUAL LAYOUT TO BE BASED ON APPROVED SUBMITTAL.
2. PROVIDE (2) #4 x 4'-0" DIAGONAL REINF @ 3" SPACING @ EA REENTRANT CORNER (4-TOTAL). PROVIDE STD 90° BEND WHERE SLAB EDGE PREVENTS PLACEMENT OF FULL LENGTH BAR.
3. WILDECK JIFFYSTAIR MODULAR STAIR SYSTEM, OR APPROVED EQUAL. PROVIDE CALOHSA COMPLIANT STAIR SYSTEM WITH GUARDRAIL ON TWO SIDES OF PLATFORM. COORDINATE ± 28" PLATFORM HEIGHT WITH APPROVED GENERATOR. HOT DIP GALVANIZED FINISH.

NOTES:

∗ = COORDINATE PLATFORM DIMENSIONS WITH APPROVED GENERATOR SUBMITTAL.

2 0 2 4 FEET
SCALE 1/2"=1'-0"

DESIGNED A LINDEMAN
DRAWN J MARTIN
CHECKED CHECKED BY
APPROVED M FISHER

WATERWORKS ENGINEERS
2280 Douglas Blvd., Suite 105 • Roseville, CA 95661 • 916-780-2888

CITY OF MORRO BAY
WATER RECLAMATION FACILITY
LIFT STATIONS AND OFFSITE PIPELINES

STRUCTURAL
PUMP STATION B
GENERATOR PLAN

REGISTERED PROFESSIONAL ENGINEER
ANDREW L. LINDEMAN
No. C88058
CIVIL
STATE OF CALIFORNIA
05-29-2020

DATE MAY 2020
PROJECT NUMBER 17-082
DRAWING NUMBER 20-S-5
SHEET NUMBER 173

FILENAME: 1782D-20S102.DGN PLOT DATE: 5/28/2020 12:48:34 PM

CONFORMED SET - DEC 2020

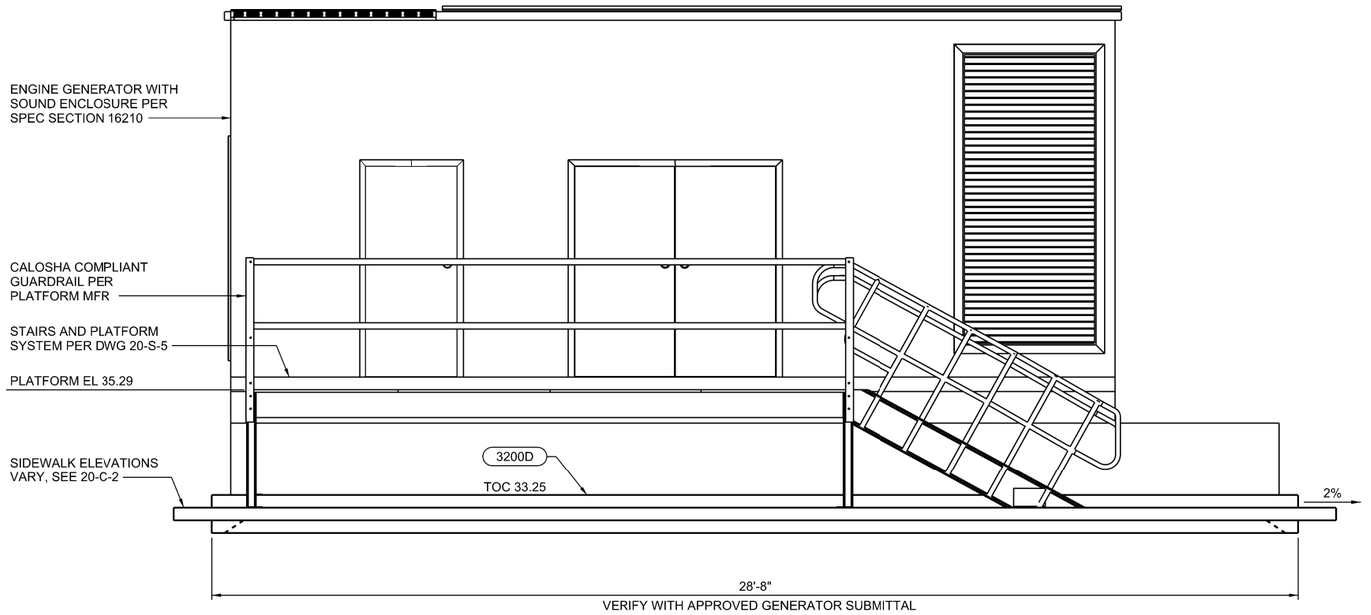

A SECTION
20-S-5 1/2" = 1'-0"

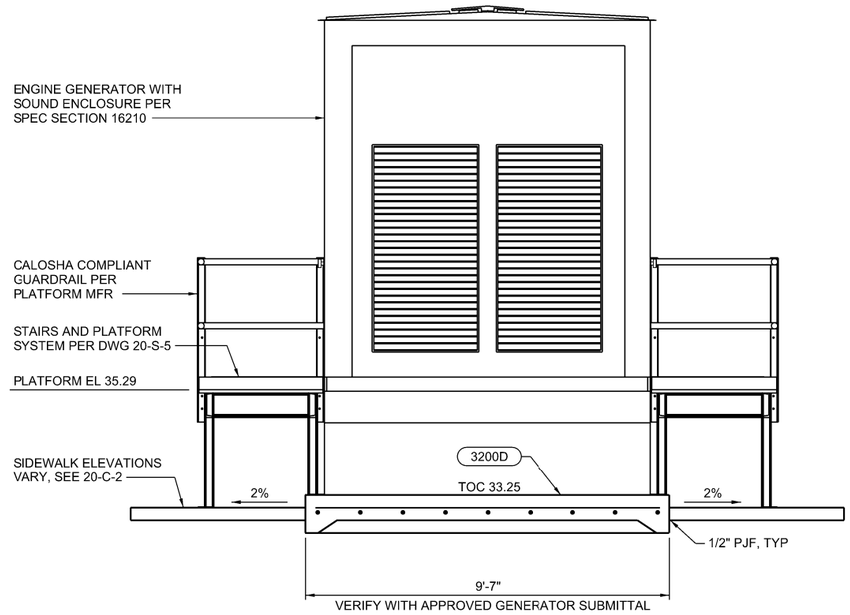

B SECTION
20-S-5 1/2" = 1'-0"

2 0 2 4 FEET
SCALE 1/2"=1'-0"

REGISTERED PROFESSIONAL ENGINEER
ANDREW L. LINDEMAN
No. C88058
CIVIL
STATE OF CALIFORNIA
05-29-2020

DESIGNED A LINDEMAN
DRAWN J MARTIN
CHECKED J KELLOGG
APPROVED M FISHER

WATERWORKS ENGINEERS
2280 Douglas Blvd., Suite 105 • Roseville, CA 95661 • 916-780-2888

CITY OF MORRO BAY
WATER RECLAMATION FACILITY
LIFT STATIONS AND OFFSITE PIPELINES

STRUCTURAL
PUMP STATION B
GENERATOR SECTIONS

DATE MAY 2020
PROJECT NUMBER 17-082
DRAWING NUMBER 20-S-6
SHEET NUMBER 174

FILENAME: 1782D-20S203.DGN PLOT DATE: 5/28/2020 12:59:50 PM

CONFORMED SET - DEC 2020

NOTES:

1. PUMP STATION DESIGN IS BASED ON FLYGT PUMPS LISTED IN SPECIFICATION SECTION 11300.

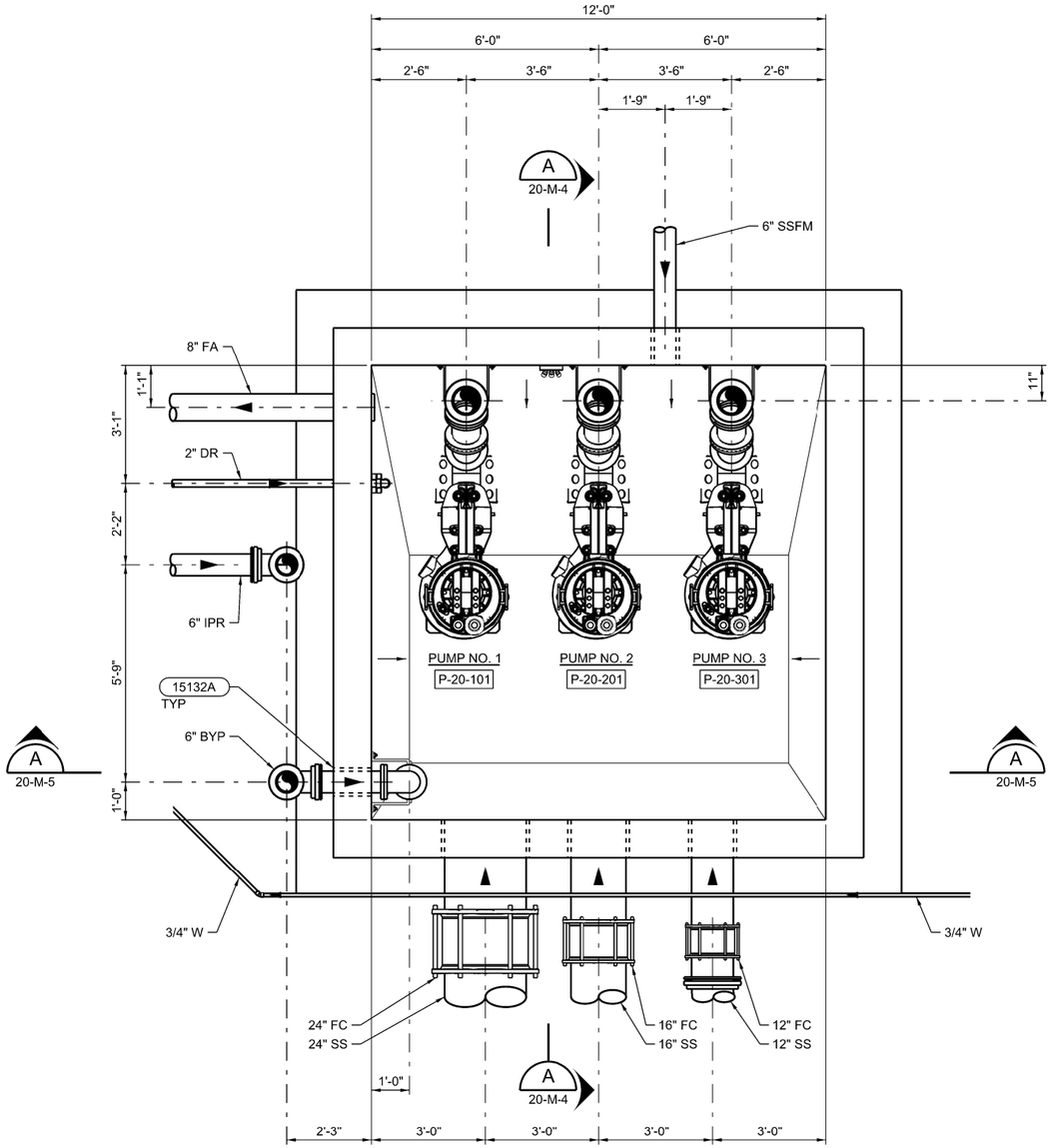

LOWER PLAN

1/2" = 1'-0"

2 0 2 4 FEET

SCALE 1/2"=1'-0"

DESIGNED K ALACON
DRAWN J MARTIN
CHECKED K ALACON
APPROVED M FISHER

WATERWORKS ENGINEERS
2290 Douglas Blvd., Suite 105 • Roseville, CA 95661 • 916-780-2888

CITY OF MORRO BAY
WATER RECLAMATION FACILITY
LIFT STATIONS AND OFFSITE PIPELINES

MECHANICAL
PUMP STATION B
LOWER PLAN

REGISTERED PROFESSIONAL ENGINEER
KRISTINA P. ALACON
No. C70952
CIVIL
STATE OF CALIFORNIA
05-29-2020

DATE
MAY 2020
PROJECT NUMBER
17-082
DRAWING NUMBER
20-M-1
SHEET NUMBER 175

FILENAME: 1782D-20M100.DGN PLOT DATE: 5/28/2020 1:08:25 PM

CONFORMED SET - DEC 2020

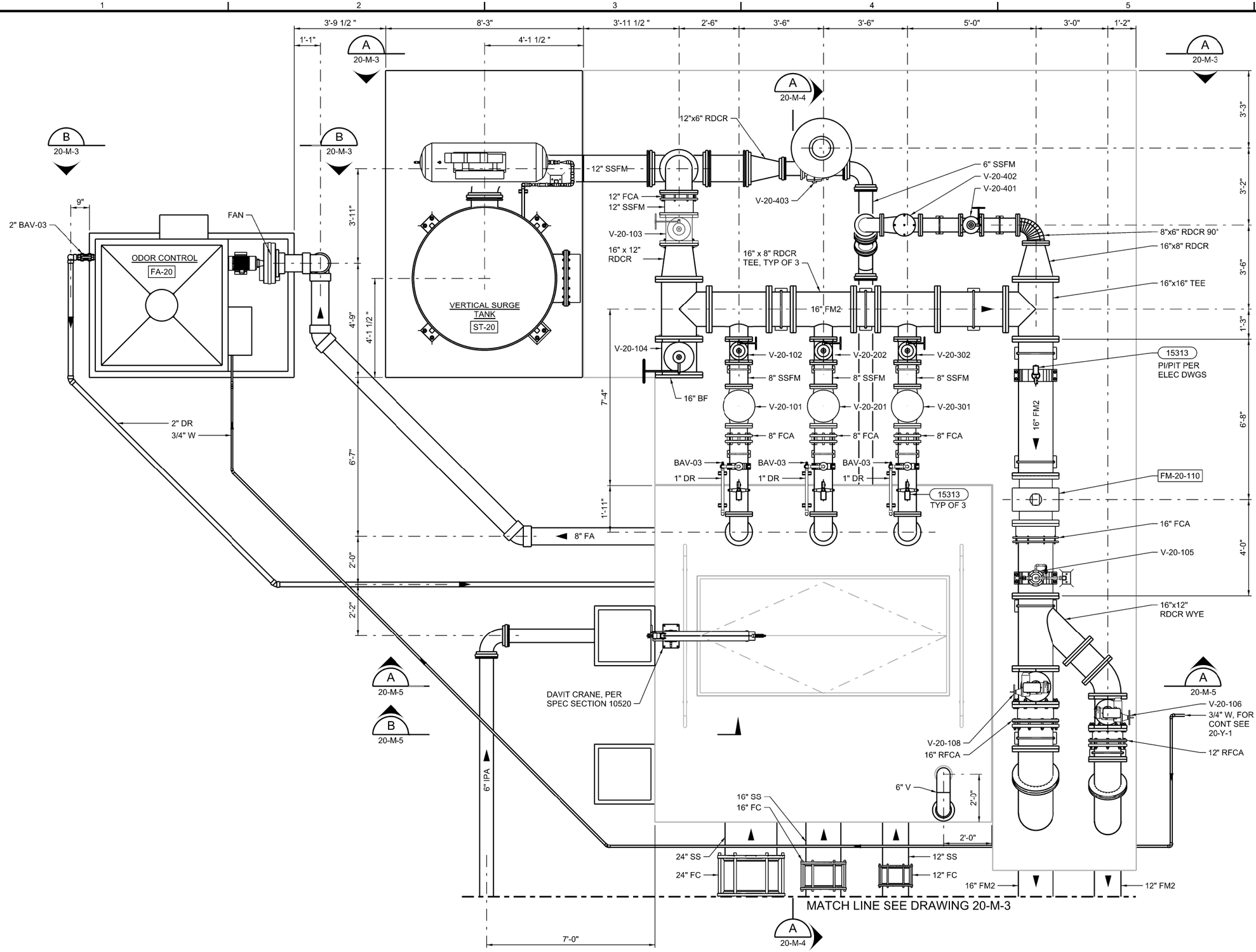

TOP PLAN

1/2" = 1'-0"

2 0 2 4 FEET

SCALE 1/2"=1'-0"

DESIGNED K ALACON
DRAWN J MARTIN
CHECKED K ALACON
APPROVED M FISHER

WATERWORKS ENGINEERS
2280 Douglas Blvd., Suite 105 • Roseville, CA 95661 • 916-780-2888

CITY OF MORRO BAY
WATER RECLAMATION FACILITY
LIFT STATIONS AND OFFSITE PIPELINES

MECHANICAL
PUMP STATION B
TOP PLAN

REGISTERED PROFESSIONAL ENGINEER
KRISTINA P. ALACON
No. C70952
CIVIL
STATE OF CALIFORNIA
05-29-2020

DATE
MAY 2020
PROJECT NUMBER
17-082
DRAWING NUMBER
20-M-2
SHEET NUMBER 176

FILENAME: 1782D-20M101.DGN PLOT DATE: 5/28/2020 1:19:17 PM

CONFORMED SET - DEC 2020

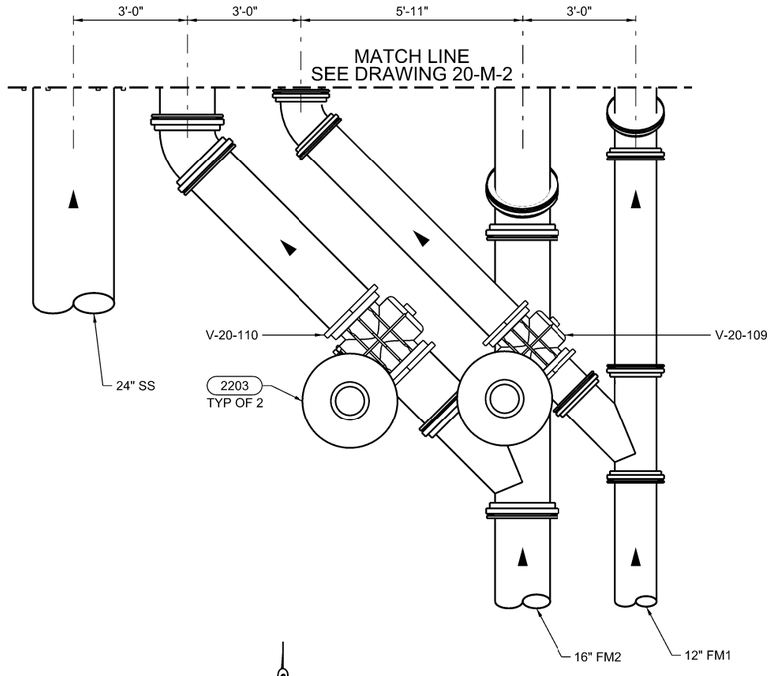

PLAN
1/2" = 1'-0"

NOTES:

1. CONTRACTOR TO VERIFY ALL TANK, SUPPORT, ANCHOR AND FOUNDATION DIMENSIONS WITH TANK MANUFACTURER PRIOR TO CONSTRUCTION.
2. PROVIDE PROBE ASSEMBLY SUPPORT PER TANK MANUFACTURER.

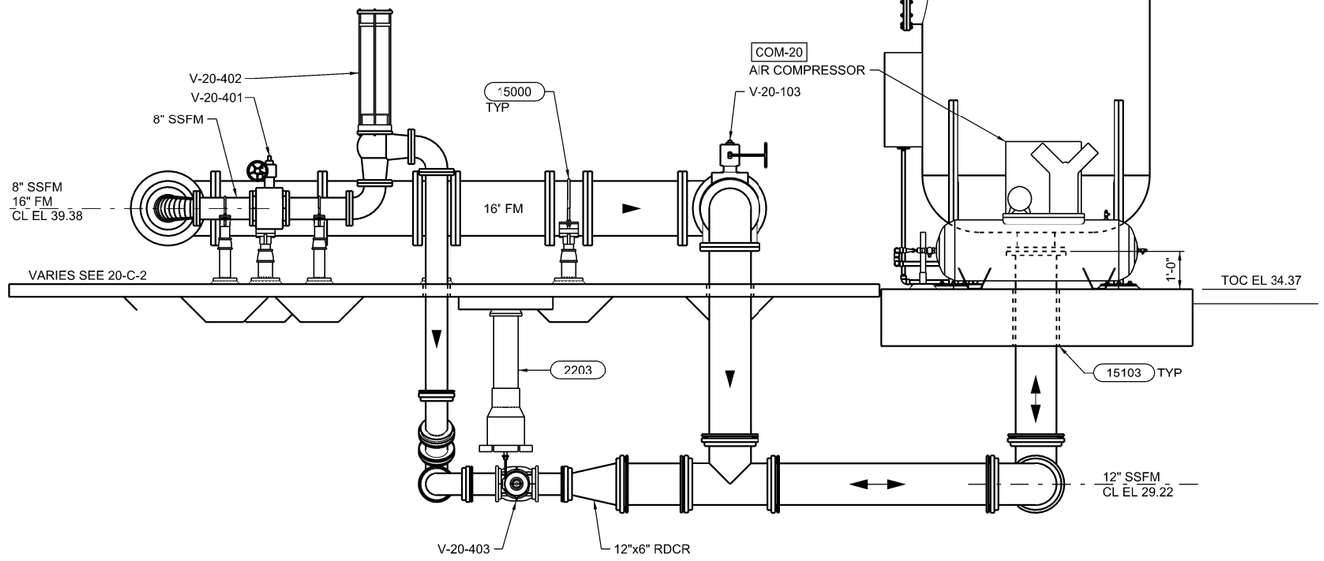

A SECTION
20-M-2 1/2" = 1'-0"

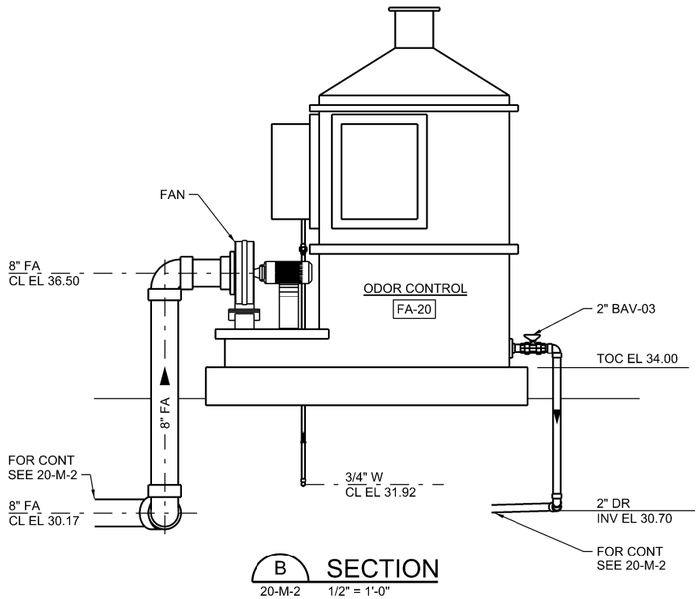

B SECTION
20-M-2 1/2" = 1'-0"

2 0 2 4 FEET
SCALE 1/2"=1'-0"

REGISTERED PROFESSIONAL ENGINEER
KRISTINA P. ALACON
No. C70952
CIVIL
STATE OF CALIFORNIA
05-29-2020

DESIGNED K ALACON
DRAWN J MARTIN
CHECKED K ALACON
APPROVED M FISHER

WATERWORKS ENGINEERS
2260 Douglas Blvd., Suite 105 • Roseville, CA 95661 • 916-780-2888

CITY OF MORRO BAY
WATER RECLAMATION FACILITY
LIFT STATIONS AND OFFSITE PIPELINES

MECHANICAL
PUMP STATION B
PARTIAL PLAN AND SECTIONS

DATE MAY 2020
PROJECT NUMBER 17-082
DRAWING NUMBER 20-M-3
SHEET NUMBER 177

CONFORMED SET - DEC 2020

NOTES:

1. FLOOR SLEEVE SHALL BE SCH 80 PVC.

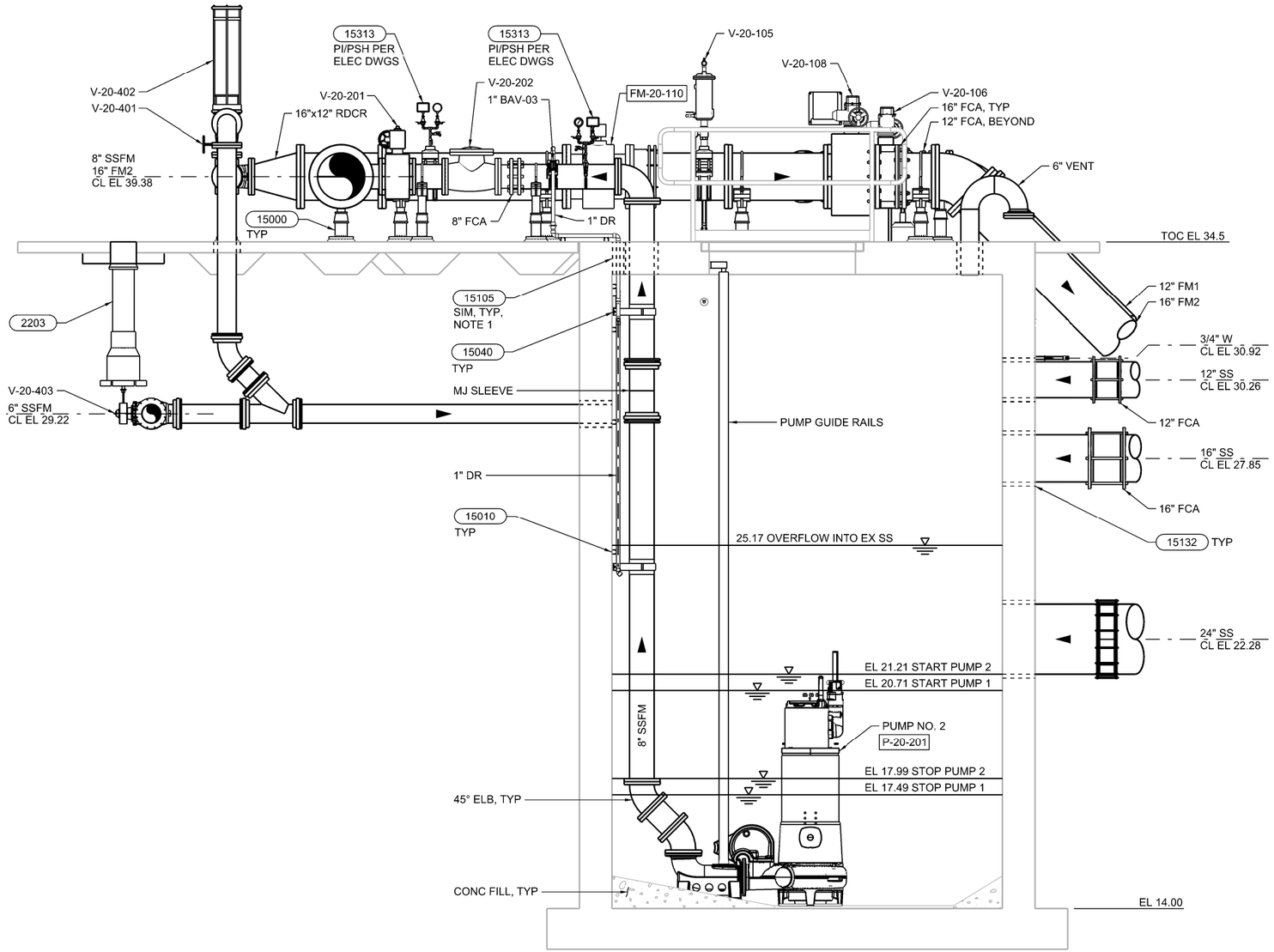

A SECTION
20-M-1
20-M-2
1/2" = 1'-0"

2 0 2 4 FEET
SCALE 1/2"=1'-0"

REGISTERED PROFESSIONAL ENGINEER
KRISTINA P. ALACON
No. C70952
CIVIL
STATE OF CALIFORNIA
05-29-2020

DESIGNED K ALACON
DRAWN J MARTIN
CHECKED K ALACON
APPROVED M FISHER

WATERWORKS ENGINEERS
2290 Douglas Blvd., Suite 105 • Roseville, CA 95661 • 916-780-2888

CITY OF MORRO BAY
WATER RECLAMATION FACILITY
LIFT STATIONS AND OFFSITE PIPELINES

MECHANICAL
PUMP STATION B SECTION

DATE
MAY 2020
PROJECT NUMBER
17-082
DRAWING NUMBER
20-M-4
SHEET NUMBER 178

FILENAME: 1782D-20M201.DGN PLOT DATE: 5/28/2020 1:57:57 PM

CONFORMED SET - DEC 2020

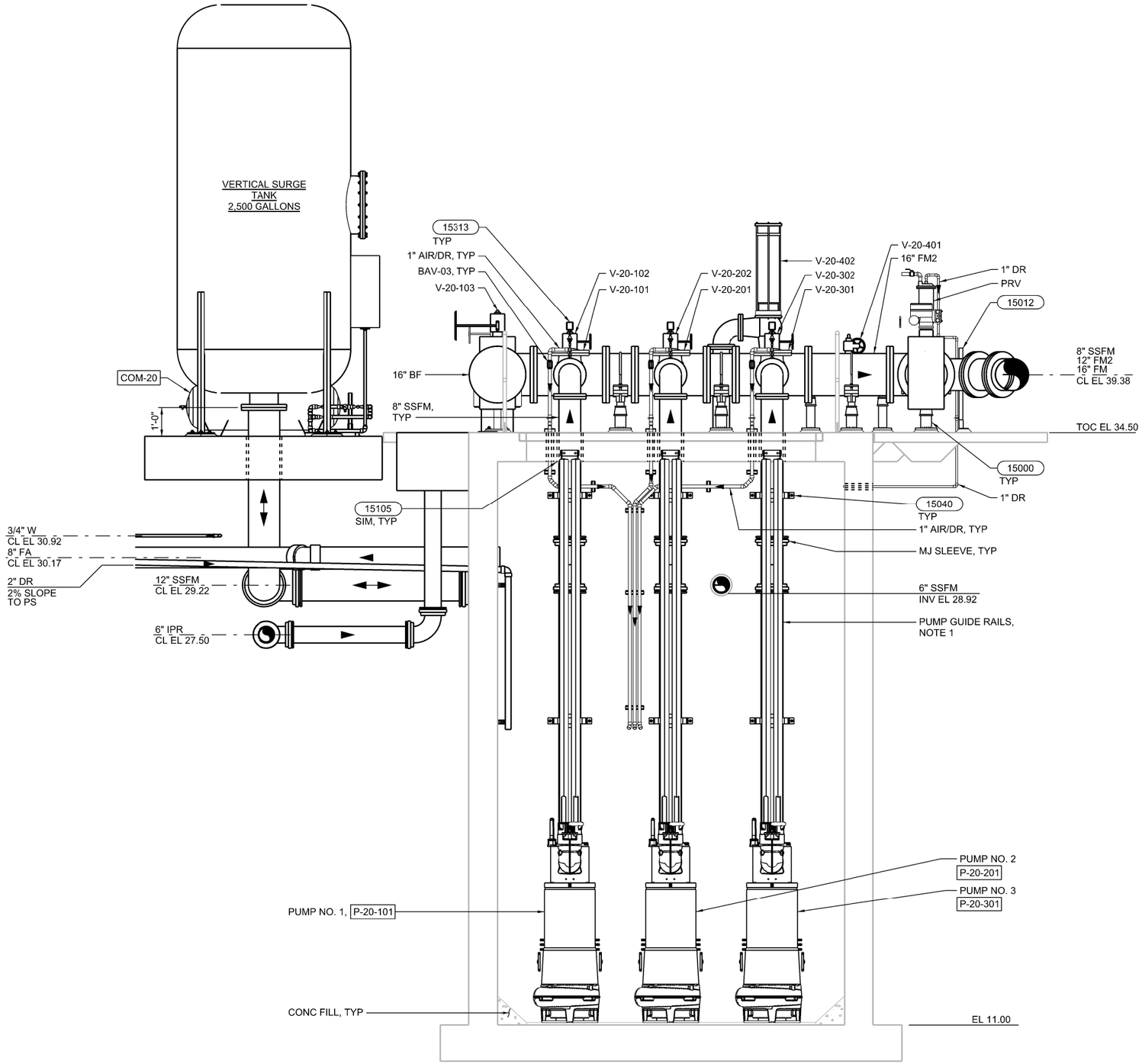

A SECTION
20-M-1 20-M-2 1/2" = 1'-0"

NOTES:

1. BY PUMP MFR.

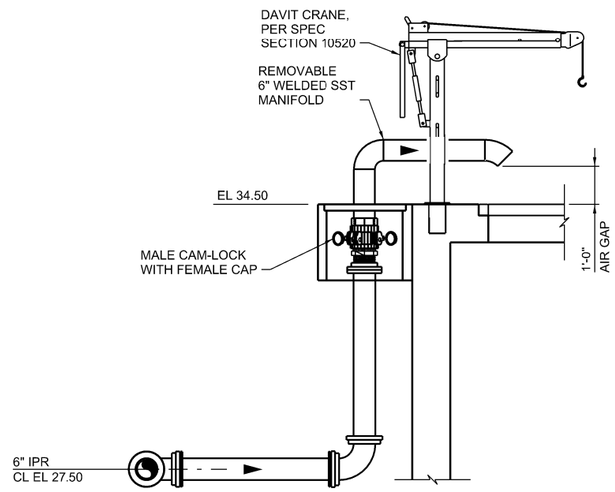

B SECTION
20-M-2 1/2" = 1'-0"

2 0 2 4 FEET
SCALE 1/2"=1'-0"

REGISTERED PROFESSIONAL ENGINEER
KRISTINA P. ALACON
No. C70952
CIVIL
STATE OF CALIFORNIA
05-29-2020

DESIGNED K ALACON
DRAWN J MARTIN
CHECKED K ALACON
APPROVED M FISHER

WATERWORKS ENGINEERS

CITY OF MORRO BAY
WATER RECLAMATION FACILITY
LIFT STATIONS AND OFFSITE PIPELINES

MECHANICAL
PUMP STATION B SECTIONS

DATE
MAY 2020
PROJECT NUMBER
17-082
DRAWING NUMBER
20-M-5
SHEET NUMBER 179

FILENAME: 1782D-20M202.DGN PLOT DATE: 5/28/2020 2:08:58 PM

CONFORMED SET - DEC 2020

HVAC LEGEND

SYMBOL	DESCRIPTION
AC 1	EQUIPMENT LABEL
CS1 / 100 / 12x12 — LABEL, CFM, SIZE	AIR INLET/OUTLET LABEL
T	THERMOSTAT (TOP OF BOX AT MAX. 48" AFF)
	POINT OF CONNECTION
C	CARBON DIOXIDE WALL SENSOR (TOP OF BOX AT MAX. 48" AFF)
S	REMOTE TEMPERATURE SENSOR
$	MANUAL WALL SWITCH
ROUND / SUPPLY / RETURN / EXHAUST	CEILING DIFFUSER/GRILLE
	WALL REGISTER/GRILLE
	DUCT UP (SECTION)
	DUCT DOWN (SECTION)
	DUCT BEYOND (SECTION)
DOUBLE-LINE / SINGLE-LINE	
WxH	RECTANGULAR DUCT (DIMENSIONS = WIDTH (VISIBLE SIDE) x HEIGHT)
Ø	ROUND DUCT (DIMENSION = DIAMETER)
12x12L	DUCT WITH INTERNAL INSULATION LINER (DIMENSIONS = NET FREE OPEN AREA)
	EXPOSED SPIRAL SEAM ROUND DUCT
	MANUAL VOLUME DAMPER
WxH / WxH	DUCT TRANSITION
WxH / Ø	RECTANGULAR TO ROUND DUCT TRANSITION
	DUCT CAP
	CUT AND REMOVE DUCT
	FLEX DUCT LINETYPE
	SUPPLY DUCT LINETYPE
	RETURN DUCT LINETYPE
	EXHAUST DUCT LINETYPE
SD	DUCT SMOKE DETECTOR
FD	FIRE DAMPER
FSD	FIRE-SMOKE DAMPER
	45° REDUCING STRAIGHT LATERAL
	45° REDUCING WYE BRANCH
	45° REDUCING LATERAL CROSS
	CONICAL BELLMOUTH TAP
	45° ENTRY TAP
	RECTANGULAR DUCT TEE WITH TURN VANES (SIZE EACH TAKOFF FOR EQUAL PRESSURE LOSS)
	RECTANGULAR DUCT ELBOW WITH TURN VANES
W / R = 1.5W	RECTANGULAR DUCT ELBOW
R = 1.5Ø	ROUND DUCT ELBOW

VARIABLE REFRIGERANT FLOW (VRF) SYSTEM SCHEDULE

OUTDOOR UNIT

LABEL	MAKE & MODEL	TYPE	NOM. TONS	CONN. INDOOR UNIT LOAD	EFFICIENCY EER	EFFICIENCY SEER	EFFICIENCY HSPF	ELECTRICAL VOLTS/PH/HZ	ELECTRICAL FLA	ELECTRICAL MCA	ELECTRICAL MOCP	OPER. WT. (LBS.)
ODU 1	SAMSUNG AM036NXMDCH/AA	HEAT RECOVERY	3	120%	12.5	22.0	10.0	208 / 1 / 60	18.5	23	40	214
ODU 2	SAMSUNG AM060MXMDCH/AA	HEAT PUMP	5	106%	11.2	20.6	11.5	208 / 1 / 60	25.7	32	50	276
ODU 3	SAMSUNG AM060MXMDCH/AA	HEAT PUMP	5	106%	11.2	20.6	11.5	208 / 1 / 60	25.7	32	50	276

REFRIGERANT DISTRIBUTION UNIT

LABEL	MAKE & MODEL	PORTS	ELECTRICAL VOLTS/PH/HZ	ELECTRICAL FLA	ELECTRICAL MCA	ELECTRICAL MOCP	OPER. WT. (LBS.)
RDU 1	SAMSUNG MCU-R4NEK0N	4	208 / 1 / 60	1.6	2.0	15	47
NOT APPLICABLE							
NOT APPLICABLE							

INDOOR UNIT

LABEL	MAKE & MODEL	TYPE	NOM. TONS	SENS. COOL MBH*	HEAT MBH**	SUPPLY FAN CFM	SUPPLY FAN ESP	ELECTRICAL VOLTS/PH/HZ	ELECTRICAL FLA	ELECTRICAL MCA	ELECTRICAL MOCP	OPER. WT. (LBS.)	OPTIONS
IDU 1A	SAMSUNG AM009MNVDCH/AA	WALL MOUNT	0.75	6.5	10.5	200	0.0"	208 / 1 / 60	0.19	--	--	18	1, 2
IDU 1B	SAMSUNG AM036JNCDCH/AA	CEILING MOUNT	3	25.4	40.9	1035	0.0"	208 / 1 / 60	0.94	--	--	74	1, 2, 4
IDU 2A	SAMSUNG AM032MNQDCH/AA	WALL MOUNT	2.67	21.5	33.6	810	0.0"	208 / 1 / 60	0.54	--	--	41	1, 2, 3, 4
IDU 2B	SAMSUNG AM032MNQDCH/AA	WALL MOUNT	2.67	21.5	33.6	810	0.0"	208 / 1 / 60	0.54	--	--	41	1, 2, 3, 4
IDU 3A	SAMSUNG AM032MNQDCH/AA	WALL MOUNT	2.67	21.5	33.6	810	0.0"	208 / 1 / 60	0.54	--	--	41	1, 2, 3, 4
IDU 3B	SAMSUNG AM032MNQDCH/AA	WALL MOUNT	2.67	21.5	33.6	810	0.0"	208 / 1 / 60	0.54	--	--	41	1, 2, 3, 4

NOTES:

* COOLI NG CAPACITY BASED ON 82°F OAT, 66°F EWB, & 80°F EDB.
** HEATING CAPACITY BASED ON 35°F OAT & 70°F EDB.

OPTIONS:

1. SAMSUNG #MWR-WG00JN WIRED REMOTE CONTROLLER
2. SAMSUNG REFRIGERANT ISOLATION VALVES FOR EACH ZONE
3. ASPEN MINI ORANGE UNIVOLT CONDENSATE PUMP (16 WATTS POWERED BY INDOOR UNIT)
4. RECTORSEAL SLIMLINE LINESET DUCT AS REQUIRED

HVAC PIPING LEGEND

ABBREV.	DESCRIPTION	SYMBOL
CD	CONDENSATE DRAIN PIPE	CD
CDO	CONDENSATE DRAIN OVERFLOW PIPE	CDO
CO	CLEANOUT, PLUG CLEANOUT	
SOV	SHUT-OFF VALVE	
(UF), (UG), (US)	UNDER FLOOR, GROUND, SLAB	

HVAC ABBREVIATIONS

(ABC)	ABOVE CEILING
AD	ACCESS DOOR
AFF, AFG	ABOVE FINISHED FLOOR, GRADE
AFUE	ANNUAL FUEL UTILIZATION EFFICIENCY
APD	AIR PRESSURE DROP
ARCH.	ARCHITECT, ARCHITECTURAL
BFF, BFG	BELOW FINISHED FLOOR, GRADE
BHP	BRAKE HORSEPOWER
BLKG	BLOCKING
BMS	BUILDING MANAGEMENT SYSTEM
BTU/HR	BRITISH THERMAL UNITS
CAV	CONSTANT AIR VOLUME
CFM	CUBIC FEET PER MINUTE
COMB.	COMBUSTION
CONN.	CONNECT, CONNECTION
CONT.	CONTINUATION, CONTINUOUS
COP	COEFFICIENT OF PERFORMANCE
DB	DRY BULB
DCV	DEMAND CONTROL VENTILATION
DIA., Ø	DIAMETER
DDC	DIRECT DIGITAL CONTROLS
DN	DOWN
(E)	EXISTING
EA	EXHAUST AIR
EAT	ENTERING AIR TEMPERATURE
E.C.	ELECTRICAL CONTRACTOR
EER	ENERGY EFFICIENCY RATIO
ESP	EXTERNAL STATIC PRESSURE
EWT	ENTERING WATER TEMPERATURE
(FA), (FB)	FROM ABOVE, FROM BELOW
F.A.C.	FIRE ALARM CONTRACTOR
FLA	FULL LOAD AMPS
FPM	FEET PER MINUTE
GA.	GAUGE
GALV.	GALVANIZED
G.C.	GENERAL CONTRACTOR
GPM	GALLONS PER MINUTE
HP	HORSEPOWER
HSPF	HEATING SEASONAL PERFORMANCE FACTOR
HZ	HERTZ
LAT	LEAVING AIR TEMPERATURE
LWT	LEAVING WATER TEMPERATURE
MBH	THOUSAND BTU/HR
M.C.	MECHANICAL CONTRACTOR
MCA	MINIMUM CURRENT AMPACITY
MFR	MANUFACTURER
MOCP	MAX. OVERCURRENT PROTECTION
(N)	NEW
NPSH	NET POSITIVE SUCTION HEAD
OA	OUTSIDE AIR
OAD	OUTSIDE AIR DAMPER
O.C.	ON CENTER
(OH)	OVERHEAD
POC	POINT OF CONNECTION
P.C.	PLUMBING CONTRACTOR
PH	PHASE
PSI	POUNDS PER SQUARE INCH
P.T.	PRESURE-TREATED
RA	RETURN AIR
RL	REFRIGERANT LIQUID LINE
RPM	ROTATIONS PER MINUTE
RS	REFRIGERANT SUCTION LINE
SA	SUPPLY AIR
SEER	SEASONAL ENERGY EFFICIENCY RATIO
SMS	SHEET METAL SCREW
SOV	SHUTOFF VALVE
S.P.	STATIC PRESSURE
S.S.	STAINLESS STEEL
STL.	STEEL
(TA), (TB)	TO ABOVE, TO BELOW
TCP	TEMPERATURE CONTROL PANEL
TCC	TEMPERATURE CONTROLS CONTRACTOR
TDH	TOTAL DYNAMIC HEAD
TSP	TOTAL STATIC PRESSURE
TSTAT	THERMOSTAT
(TYP), TYP.	TYPICAL
(UF), (US)	UNDER FLOOR, UNDER SLAB
(UG)	UNDERGROUND
U.N.O	UNLESS NOTED OTHERWISE
V	VOLTAGE
VAV	VARIABLE AIR VOLUME
VD	VOLUME DAMPER
VFD	VARIABLE FREQUENCY DRIVE
VB	VALVE BOX
VRF	VARIABLE REFRIGERANT FLOW
WB	WET BULB
W.C. , W.G.	WATER COLUMN, WATER GAUGE
WPD	WATER PRESSURE DROP

EXHAUST FAN SCHEDULE

LABEL	MAKE & MODEL	TYPE	CFM	ESP	SONES	FAN HP	FAN MOTOR	ELECTRICAL VOLTS/PH/HZ	ELECTRICAL AMPS	ELECTRICAL WATTS	ELECTRICAL BHP	OPER. WEIGHT (LBS.)	CONTROL	OPTIONS
EF 1	PANASONIC FV-1115VK2	CEILING	130	0.1"	< 0.3	--	DC ECM	120 / 1 / 60	0.24	9.2	--	12	SWITCHED W/ LIGHTS	1, 2, 3

OPTIONS:

1. HOODED ROOF EXHAUST OUTLET.
2. BACKDRAFT DAMPER.
3. VENTILATION RATE SELECTOR.

PIPE MATERIAL SCHEDULE

TYPE	INSIDE	OUTSIDE	INSULATION	REMARKS
REFRIGERANT LIQUID & SUCTION	ACR COPPER. USE ANNEALED SOFT COPPER UP TO ⅞". USE HARD DRAWN COPPER FOR ⅞" AND LARGER.	ACR COPPER. USE ANNEALED SOFT COPPER UP TO ⅞". USE HARD DRAWN COPPER FOR ⅞" AND LARGER.	PER HVAC UNIT MANUFACTURER'S INSTRUCTIONS	PROVIDE WEATHER PROTECTIVE ALUMINUM JACKETMNA OR GALV. SHEETMETAL ENCLOSURE OVER ALL INSULATION LOCATED OUTSIDE.
CONDENSATE DRAIN	TYPE-M COPPER	TYPE-M COPPER	--	--

DUCT MATERIAL SCHEDULE

TYPE	MATERIAL	INSULATION	REMARKS
EXHAUST AIR	GALV. SHEETMETAL GA. PER SMACNA STANDARDS	NONE	USE 5 FT MIN. UL CLASS 1 FLEX DUCT FOR TERMINAL CONNECTIONS. LIMIT ALL FLEX DUCT LENGTHS TO 5 FT MAX.

CONTRACTOR VRF TRAINING

PRIOR TO BEGINNING ANY WORK, MECHANICAL CONTRACTOR SHALL COMPLETE THE VRF SYSTEM MANUFACTURER'S FACTORY TRAINING/CERTIFICATION PROGRAM FOR THE INSTALLATION, COMMISSIONING, AND CONFIGURATION OF SPECIFIED AND/OR INSTALLED VRF SYSTEM.

DESIGN S. TURNBULL
DRAWN S. TURNBULL
CHECKED K. ALACON
APPROVED J. RIESS

SYSTEMS ENGINEERING
MECHANICAL & ENERGY ENGINEERING
9063 Foothills Blvd., Ste 3
Roseville, CA 95747
(916) 774-6330

WATERWORKS ENGINEERS
2260 Douglas Blvd, Suite 105 • Roseville, CA 95661 • 916-780-3988

CITY OF MORRO BAY
WATER RECLAMATION FACILITY
LIFT STATION AND OFFSITE PIPELINES

HVAC
PUMP STATION A AND B
HVAC SCHEDULES AND LEGEND

REGISTERED PROFESSIONAL ENGINEER
SCOTT TURNBULL
No. M33897
Exp. 12/31/21
MECHANICAL
STATE OF CALIFORNIA

DATE MAY 2020
PROJECT NUMBER 17-082
DRAWING NUMBER M-1
SHEET NUMBER 180

JOB NUMBER: 17-082 FILENAME: MORROBAYSPS M-1 SCHED.DWG PLOT DATE: 05/27/20 PLOT TIME: 14:50:44

CONFORMED SET - DEC 2020

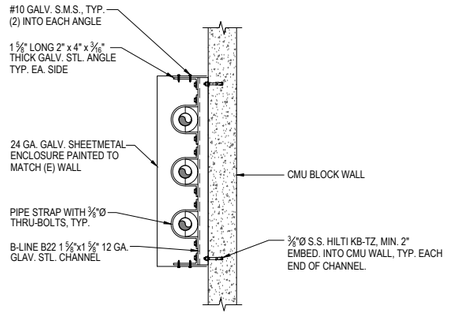

4 PIPE ENCLOSURE
SCALE: NONE

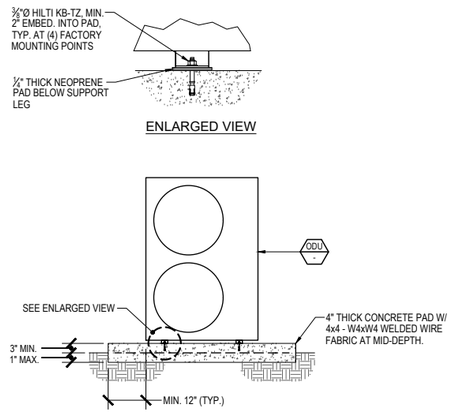

3 VRF OUTDOOR UNIT
SCALE: NONE

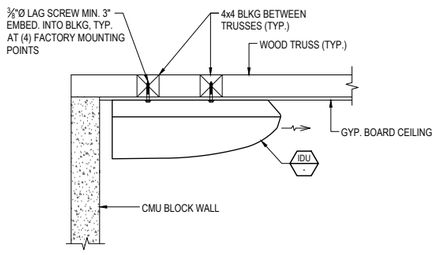

6 CEILING-MOUNT VRF INDOOR UNIT
SCALE: NONE

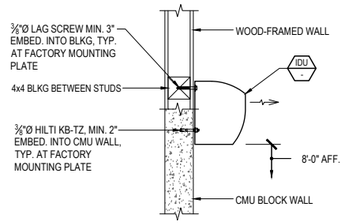

5 WALL-MOUNT VRF INDOOR UNIT
SCALE: NONE

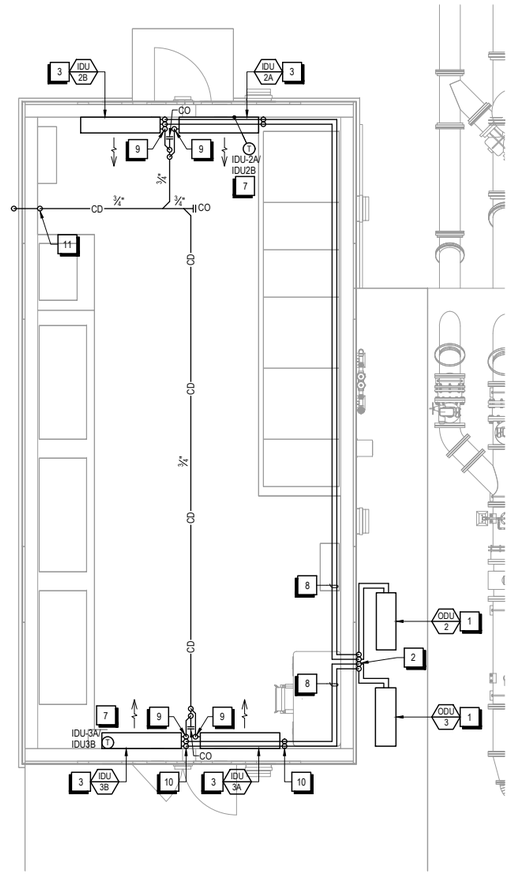

2 PUMP STATION PS-B - ELECTRICAL BUILDING HVAC PLAN
SCALE: 1/4" = 1'-0"

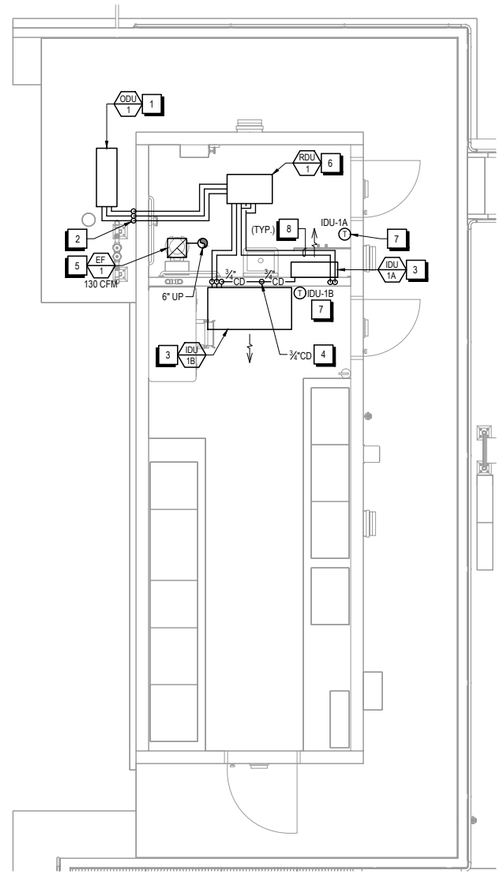

1 PUMP STATION PS-A - ELECTRICAL BUILDING HVAC PLAN
SCALE: 1/4" = 1'-0"

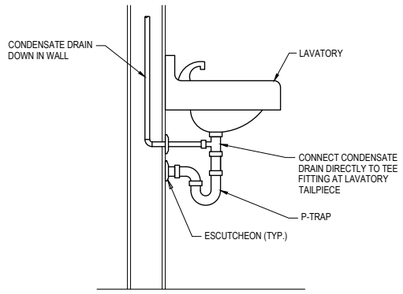

7 CD TO LAVATORY TAILPEICE
SCALE: NONE

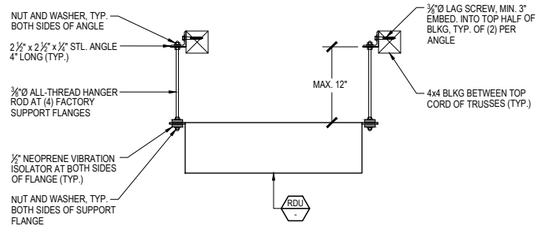

8 REFRIGERANT DISTRIBUTION UNIT
SCALE: NONE

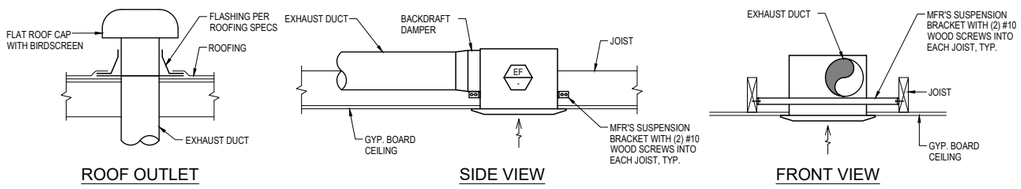

9 CEILING EXHAUST FAN
SCALE: NONE

KEYNOTES:

1. PROVIDE (N) VRF OUTDOOR UNIT ON (N) CONCRETE PAD. SEE 3/M-2
2. ROUTE (N) REFRIGERANT LINES UP EXTERIOR WALL IN SHEET METAL ENCLOSURE TO (N) REFRIGERANT DISTRIBUTION UNIT IN ATTIC. SIZE REFRIGERANT LINES PER MANUFACTURER'S INSTRUCTIONS. SEE 4/M-2
3. PROVIDE (N) VRF INDOOR UNIT AT HIGH SIDEWALL. SEE 5/M-2
4. PROVIDE (N) VRF INDOOR UNIT AT CEILING. SEE 6/M-2
5. PROVIDE (N) CEILING EXHAUST FAN. SEE 9/M-2
6. PROVIDE (N) SUSPENDED VRF REFRIGERANT DISTRIBUTION UNIT IN ATTIC. SEE 8/M-2
7. PROVIDE INSULATED BACKING FOR (N) INDOOR UNIT CONTROLLER LOCATED AT EXTERIOR WALL.
8. ROUTE (N) REFRIGERANT LINES IN ATTIC TO (N) INDOOR UNIT. SIZE PER MANUFACTURER INSTRUCTIONS.
9. PROVIDE (N) CONDENSATE AND PUMPED CD UP IN LINESET DUCT TO GRAVITY CD IN ATTIC.
10. ROUTE (N) EXPOSED REFRIGERANT LINES IN LINESET DUCT UP TO ATTIC.
11. ROUTE (N) CD DOWN FROM ATTIC TO DAYLIGHT 6" ABOVE LANDSCAPED AREA.
12. ROUTE (N) CONDENSATE DRAIN DOWN TO LAVATORY TAILPIECE. SEE 7/M-2

REGISTERED PROFESSIONAL ENGINEER SCOTT TURNBULL No. M33897 Exp. 12/31/21 MECHANICAL STATE OF CALIFORNIA

DESIGN S. TURNBULL
DRAWN S. TURNBULL
CHECKED K. ALACON
APPROVED J. RIESS

SYSTEMS ENGINEERING
MECHANICAL & ENERGY ENGINEERING
9063 Foothills Blvd, Ste 3
Roseville, CA 95747
(916) 774-6330

WATERWORKS ENGINEERS
2260 Douglas Blvd, Suite 105 • Roseville, CA 95661 • 916-780-2958

CITY OF MORRO BAY
WATER RECLAMATION FACILITY
LIFT STATION AND OFFSITE PIPELINES

HVAC
PUMP STATION A AND B HVAC PLANS AND DETAILS

DATE MAY 2020
PROJECT NUMBER 17-082
DRAWING NUMBER M-2
SHEET NUMBER 181

CONFORMED SET - DEC 2020

COMPONENTS

SYMBOL	DESCRIPTION
RES	RESISTOR
SV	SOLENOID COIL
HTR	HEATER
	CAPACITOR
	DIODE
	DIODE, ZENER
MOV	METAL OXIDE VARISTOR
	AUDIBLE ALARM
?	3 PHASE MOTOR ? = MOTOR HP
M	3 PHASE MOTOR
M	SINGLE PHASE MOTOR
	TRANSFORMER SIZE AND VOLTAGE AS SHOWN
M	UTILITY POWER METER
	UFER GROUND
	GROUND ROD
	CURRENT TRANSFORMER RATIO AS NOTED
	DISCONNECT SWITCH SIZED PER FEEDER
PDB	POWER DISTRIBUTION BLOCK

SWITCHES – OPERATOR

SYMBOL	DESCRIPTION
SW	TOGGLE OR DISCONNECT SWITCH
PB	PUSHBUTTON – NORMALLY OPEN, MOMENTARY ACTION
PB	PUSHBUTTON – NORMALLY CLOSED, MOMENTARY UNLESS LOS (LOCK OUT STOP) WHERE MECHANICALLY HELD
PB	PUSHBUTTON, MECHANICALLY CONNECTED, DOUBLE CIRCUIT – NORMALLY CLOSED AND NORMALLY OPEN
HAND OFF AUTO	SELECTOR SWITCH, 3 POSITION – CONTACT STATUS SHOWN EXISTS I.E. AT POSITION OF HAND, OFF, OR AUTO SELECTOR SWITCH, 2 POSITION – MIDDLE POSITION IS DELETED ALTERNATE METHOD: X00 = HAND 00X = AUTO, 0X0 = OFF
	POTENTIOMETER

SWITCHES – PROCESS

SYMBOL	DESCRIPTION
FS	FLOW SWITCH – CLOSES UPON INCREASING FLOW
FS	FLOW SWITCH – OPENS UPON INCREASING FLOW
LS	LEVEL SWITCH – CLOSES UPON INCREASING LEVEL
LS	LEVEL SWITCH – OPENS UPON INCREASING LEVEL
PS	PRESSURE SWITCH – CLOSES UPON INCREASING PRESSURE (DECREASING VACUUM)
PS	PRESSURE SWITCH – OPENS UPON INCREASING PRESSURE (DECREASING VACUUM)
TS	TEMPERATURE SWITCH – CLOSES UPON INCREASING TEMPERATURE
TS	TEMPERATURE SWITCH – OPENS UPON INCREASING TEMPERATURE
ZS	LIMIT SWITCH – CLOSES AT SET LIMIT
ZS	LIMIT SWITCH – OPENS AT SET LIMIT
WS	TORQUE SWITCH – CLOSES UPON INCREASING TORQUE
WS	TORQUE SWITCH – OPENS UPON INCREASING TORQUE

DEVICES – FRONT PANEL

SYMBOL	DESCRIPTION
X	INDICATING LIGHT, LETTER "X" INDICATES COLOR: R=RED G=GREEN, A=AMBER, W=WHITE Y=YELLOW, B=BLUE
PTT X	INDICATING LIGHT, PUSH TO TEST
ETM	ELAPSED TIME METER

DEVICES – PROTECTIVE

SYMBOL	DESCRIPTION
S	CT SHORTING TERMINAL BLOCK
PTS	FUSED POTENTIAL TRANSFORMER, 208 / 120 V SECONDARY OR AS SHOWN
PM	POWER MONITOR
SPD	SURGE PROTECTION DEVICE
PFR	POWER FAIL REPLAY

DEVICES – RELAY

SYMBOL	DESCRIPTION
M1	CONTACTOR OR STARTER M1
CR 1	CONTROL RELAY CR1
TR 2	TIME DELAY RELAY TR2 – ADJUSTABLE TIME DELAY RANGE & SETTING AS SHOWN
TDOE TDOD	TIME DELAY ON ENERGIZATION TIME DELAY ON DE–ENERGIZATION
107, 121	REFERENCED RELAY WITH N.O. CONTACT ON LINE 107 N.C. CONTACT ON LINE 121
CR1 (105)	NORMALLY OPEN, RELAY CONTACT – ACTUATED BY RELAY CR1 COIL LOCATED ON LINE 105
CR1	NORMALLY CLOSED, RELAY CONTACT – ACTUATED BY RELAY CR1
TR2	NORMALLY OPEN, TIME DELAY RELAY CONTACT – CONTACT CLOSES AFTER TR2 IS ENERGIZED
TR2	NORMALLY CLOSED, TIME DELAY RELAY CONTACT – CONTACT OPENS AFTER TR2 IS ENERGIZED
TR2	NORMALLY OPEN, TIME DELAY RELAY CONTACT – CONTACT OPENS AFTER TR2 IS DE–ENERGIZED
TR2	NORMALLY CLOSED, TIME DELAY RELAY CONTACT – CONTACT CLOSES AFTER TR2 IS DE–ENERGIZED
TR2	CONTACT OPENS AND CLOSES IN A TIMED REPEAT CYCLE

DEVICES – PROTECTIVE

SYMBOL	DESCRIPTION
y xA xP xT	LOW VOLTAGE MOLDED CASE, INSULATED CASE OR POWER CIRCUIT BREAKER. RATINGS AS SHOWN IN DRAWINGS AND AS DEFINED BELOW: xA: CIRCUIT BREAKER AMERAGE xAT: AMPERAGE TRIP xAF: AMPERAGE FRAME xP: NUMBER OF POLES xT: TRIP PROTECTION MCP: MOTOR CIRCUIT PROTECTION TM: THERMAL MAGNETIC L: LONG TIME DELAY S: SHORT TIME DELAY I: INSTANTANEOUS TRIP G: GROUND FAULT A: ARC FLASH PROTECTION
100%	100% DUTY RATED
S K M E	y: BREAKER FEATURES / OPTIONS – SHUNT TRIP – KIRK–KEY INTERLOCK – MANUALLY CHARGED PUSHBUTTON OPERATION – ELECTRICALLY CHARGED PUSHBUTTON OPERATION
OL	THERMAL OVERLOAD CONTACT
	THERMAL OVERLOAD ELEMENT
	FUSE
52	MEDIUM VOLTAGE CIRCUIT BREAKER TRIP FUNCTIONS PER DRAWINGS AND SPECIFICATIONS
MFR	MULTIFUNCTION RELAY PER SPECIFICATIONS

WIRING – CONNECTIONS

SYMBOL	DESCRIPTION
	PANEL OR EQUIPMENT WIRING
	FIELD WIRING
	CONDUCTORS – NOT CONNECTED
	CONDUCTORS – CONNECTED
	GROUND CONNECTION
	PLUG AND RECEPTACLE
	INCOMING LINE
123 / 123	TERMINAL BLOCKS WITH TERMINAL NUMBER AS SHOWN OR AS DETERMINED BY SUBMITTAL
123	DISCONNECTING TERMINAL BLOCK
	FUSE
SHIELD CONDUCTOR	SHIELDED CABLE

PLAN – SYMBOLS

SYMBOL	DESCRIPTION
	CONDUIT, EXPOSED
	CONDUIT, IN SLAB OR BELOW GRADE
	CONDUIT, CONCEALED IN WALL OR CEILING
	CONDUIT STUBBED OUT & CAPPED
	CONDUIT BENDS TOWARD OBSERVER
	CONDUIT BENDS AWAY FROM OBSERVER
	CONDUIT ENDS
J	FLEXIBLE CONDUIT CONNECTION FROM J–BOX TO EQUIPMENT
	CONDUIT CHANGE IN ELEVATION
G	BARE COPPER GROUND WIRE
G	GROUND CONNECTION BOLTED TYPE
G	GROUND CONNECTION EXOTHERMIC WELD TYPE
	DISCONNECT SWITCH
	FIELD MOUNTED DEVICE
	TELEPHONE/DATA RECEPTACLE 2 PORT TA568A, 2 CAT 6 CABLES
#	CONDUIT REFERENCE TO SCHEDULE
T	THERMOSTAT
E	EYS SEAL
J	JUNCTION BOX
	PULL BOX OF SIZE SHOWN (CHRISTY BOX SIZE MINIMUM)
A a #	LIGHTING FIXTURE # – CIRCUIT BREAKER NUMBER A – FIXTURE SCHEDULE REF. a – CONTROL SWITCH REFERENCE
WP #7 WP	DUPLEX RECEPTACLE # – CIRCUIT BREAKER NUMBER WP – WEATHERPROOF (IF SHOWN) GFI – GROUND FAULT TYPE
$ aM	TOGGLE SWITCH a – FIXTURES CONTROLLED 3 – 3 WAY M = MOTION DETECTOR T = TIMER SWITCH
	SPECIAL RECEPTACLE AS REQUIRED FOR EQUIPMENT TO BE CONNECTED

MISCELLANEOUS ABBREVIATIONS

&	AND	N	NEUTRAL
@	AT	NC	NORMALLY CLOSED
A	AMBER, AMPERES	NHC	NORMALLY HELD CLOSED
AC	ALTERNATING CURRENT	NHO	NORMALLY HELD OPEN
ACK	ACKNOWLEDGE	NIC	NOT IN CONTRACT
AFF	ABOVE FINISHED FLOOR	NL	NIGHT LIGHT
AH	AMP HOUR	NO	NORMALLY OPEN
AI	ANALOG INPUT	NTS	NOT TO SCALE
AIC	AMP INTERRUPTING CAPACITY SYMMETRICAL	(N)	NEW
AM	AMP METER	OC	ON CENTER
AO	ANALOG OUTPUT	OI, OIT	OPERATOR INTERFACE
AWG	AMERICAN WIRE GUAGE	OL	OVERLOAD
ATS	AUTOMATIC TRANSFER SWITCH	ORP	OXIDATION REDUCTION POTENTIAL
BATT	BATTERY	P	POLE
BFC	BELOW FINISHED CEILING	PB	PUSHBUTTON
BOD	BIOCHEMICAL OXYGEN DEMAND	PBX	PULL BOX
BPF	BAND PASS FILTER	PDB	POWER DISTRIBUTION BLOCK
BYP	BYPASS	PF	POWER FACTOR
C	CONDUIT	PFR	POWER FAIL RELAY
CAP	CAPACITOR	PH	HYDROGEN ION CONCENTRATION
CB	CIRCUIT BREAKER	PLC	PROGRAMMABLE LOGIC CONTROLLER
CKT	CIRCUIT	PM	POWER MONITOR
COAX	COAXIAL CABLE	PNL	PANEL
COMM	COMMUNICATION	POT	POTENTIOMETER
CR	CONTROL RELAY	PR	PAIR, TWISTED AND SHIELDED
CT	CURRENT TRANSFORMER	PRI	PRIMARY
CS	CONSTANT SPEED	PROVIDE	FURNISH, INSTALL, AND CONNECT
CU	COPPER	PS	PRESSURE SWITCH
DC	DIRECT CURRENT	PT	POTENTIAL TRANSFORMER
DET	DETAIL	PTT	PUSH TO TEST
DI	DIGITAL INPUT	PVC	POLYVINYLCHLORIDE
DISC	DISCONNECT	PWR	POWER
DO	DIGITAL OUTPUT	REF	REFERENCE
DPDT	DOUBLE POLE DOUBLE THROW	RFI	RADIO FREQUENCY INTERFERENCE
DWG	DRAWING	RMS	ROOT MEAN SQUARE
E–DTL	ELECTRICAL DRAWING DETAIL	RTD	RESISTANCE TEMPERATURE DETECTOR
ELEV	ELEVATION	RST	RESET
ENET	ETHERNET	RVAT	REDUCE VOLTAGE AUTO TRANSFORMER
ETM	ELAPSED TIME METER	RTU	REMOTE TERMINAL UNIT
ESW	ETHERNET SWITCH	(R)	REWIRE, RELOCATE, REVISE, REUSE
(E)	EXISTING	SCH	SCHEDULE
FCS	FIELD CONTROL STATION	SEC	SECONDARY, SECOND
FLA	FULL LOAD AMPS	SECS	SECONDS
FLEX	FLEXIBLE LIQUID TIGHT CONDUIT	SEL	SELECTOR
FS	FULL SPEED	SFA	SERVICE FACTOR AMPS
FVNR	FULL VOLTAGE NON–REVERSING	SPEC	SPECIFICATION
FVR	FULL VOLTAGE REVERSING	SPD	SURGE PROTECTIVE DEVICE
FWD	FORWARD	SS	STAINLESS STEEL
(F)	FUTURE	SSRC	STAINLESS STEEL RIGID CONDUIT
GALV	GALVANIZED	SSS	SOLID STATE STARTER
GFI	GROUND FAULT INTERRUPTER	STT	START
GND	GROUND	STP	STOP
GRS	GALVANIZED RIGID STEEL CONDUIT	SV	SOLENOID VALVE
GRS–PVC	PVC COATED GRS CONDUIT	SW	SWITCH
HI	HIGH	SWBD	SWITCHBOARD
HIM	HUMAN INTERFACE MODULE	SYM	SYMMETRICAL
HOA	HAND OFF AUTO	TB	TERMINAL BLOCK
HP	HORSE POWER	TC	TIME CLOCK
HPS	HIGH PRESSURE SODIUM	TDOD	TIME DELAY ON DE–ENERGIZATION
HS	HAND SWITCH	TDOE	TIME DELAY ON ENERGIZATION
HTR	HEATER	TELCO	TELEPHONE COMPANY
HZ	HERTZ	TM	THERMAL MAGNETIC
HZD	HAZARD	TEMP	TEMPERATURE
I	INTERLOCK	TR	TIME DELAY RELAY
I/O	INPUT/OUTPUT	TRIAD	TWISTED AND SHIELDED 3 CONDUCTOR
INST	INSTANTANEOUS	TS	TEMPERATURE SWITCH
ISR	INTRINSICALLY SAFE RELAY	TSPR	TWISTED AND SHIELDED PAIR
IS	INTRINSICALLY SAFE	TVSS	TRANSIENT VOLTAGE SURGE SUPPRESSOR
J	JUNCTION BOX	TYP	TYPICAL
K	KILO, PREFIX	UG	UNDERGROUND
LA	LIGHTNING ARRESTOR	ULH	ULTRA LOW HARMONIC
LC	LIGHTING CONTACTOR	UON	UNLESS OTHERWISE NOTED
LEL	LOWER EXPLOSION LIMIT	UPS	UNINTERRUPTIBLE POWER SUPPLY
LOS	LOCK OUT STOP	V	VOLTAGE
LS	LIMIT SWITCH	VA	VOLT AMPS
M	MOTOR CONTACTOR	VAR	VOLT AMPS REACTIVE
MAG	MAGNETIC FLOWMETER	VFD	VARIABLE FREQUENCY DRIVE
MAX	MAXIMUM	VLV	VALVE
MCC	MOTOR CONTROL CENTER	VM	VOLTMETER
MCM	THOUSAND CIRCULAR MILS	VMR	VOLTAGE MONITOR RELAY
MCP	MOTOR CIRCUIT PROTECTOR	VR	VOLTAGE RELAY
MCS	MOLDED CASE SWITCH	W	WATTS
MH	MANHOLE	WP	WEATHER PROOF, NEMA 3R
MIN	MINIMUM, MINUTE	WTP	WATER TREATMENT PLANT
MODEM	MODEM	WWTP	WASTE WATER TREATMENT PLANT
MOV	MOTOR OPERATED VALVE	XFMR	TRANSFORMER
MTR	MOTOR	Z	IMPEDANCE
MUX	MULTIPLEXER	ZS	LIMIT SWITCH
MV	MERCURY VAPOR, MEDIUM VOLTAGE		

REGISTERED PROFESSIONAL ENGINEER THOMAS P. FRISCH No. E15761 ELECTRICAL STATE OF CALIFORNIA
05/27/2020

DESIGN T. FRISCH
DRAWN N. CONANT
CHECKED M. FRISCH
APPROVED M. FISHER

FRISCH ENGINEERING, INC.
CONSULTING ELECTRICAL ENGINEERS
13405 FOLSOM BLVD, UNIT 600
FOLSOM, CA 95630
PH 916 353 1025
WWW.FRISCHENGINEERING.COM
FILE: 1805H-E00E01.DWG
DATE: MAY 28, 2020 TIME: 11:01:42AM

WATERWORKS ENGINEERS
2260 Douglas Blvd, Suite 150 • Roseville, CA 95661 • 916-780-2888

CITY OF MORRO BAY
WATER RECLAMATION FACILITY
LIFT STATON AND OFFSITE PIPELINES

ELECTRICAL
SYMBOLS AND ABBREVIATIONS

DATE MAY 2020
PROJECT NUMBER 17-082
DRAWING NUMBER 00-E-01
SHEET NUMBER 182

CONFORMED SET - DEC 2020

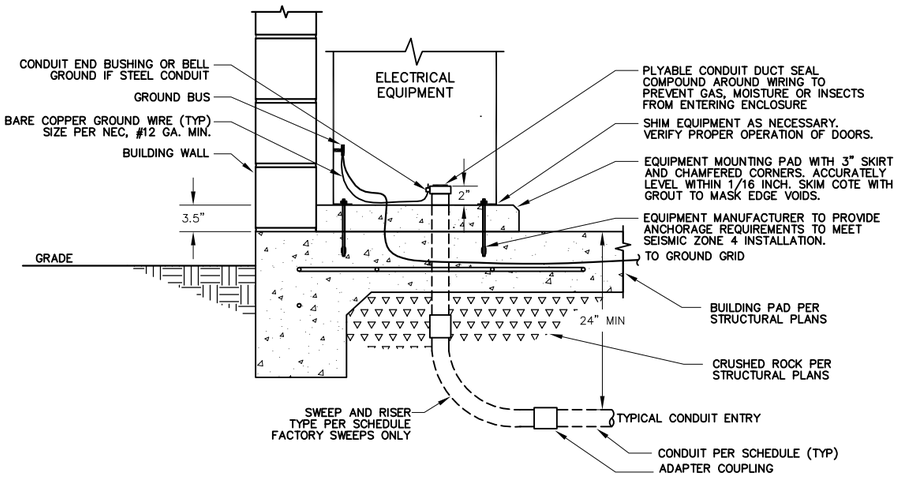

ECP — **EQUIPMENT CONCRETE PAD DETAIL**
NOT TO SCALE

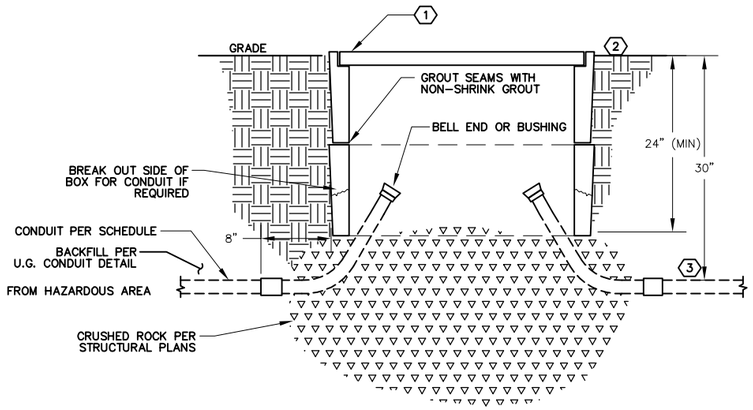

UPB — **UNDERGROUND PULL BOX DETAIL**
NOT TO SCALE

NOTES:
1. PROVIDE CONCRETE LID IN NON-TRAFFIC AREAS. PROVIDE TRAFFIC RATED STEEL LID IN TRAFFIC AREAS. LABEL COVER PLATE "ELECTRICAL"
2. COLLAR TO BE 1/4" ABOVE SURROUNDING GRADE AND TOP OF PULL BOX
3. CONDUIT BEHIND EYS SHALL BE GRS-PVC FOR 2 FT (MIN).

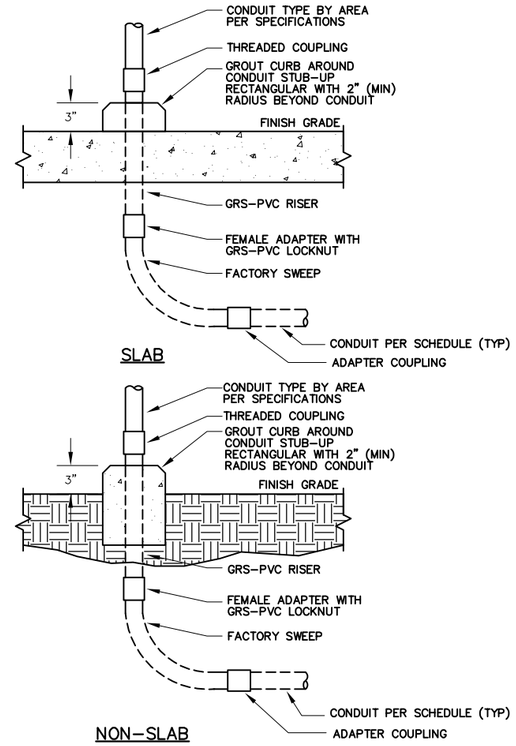

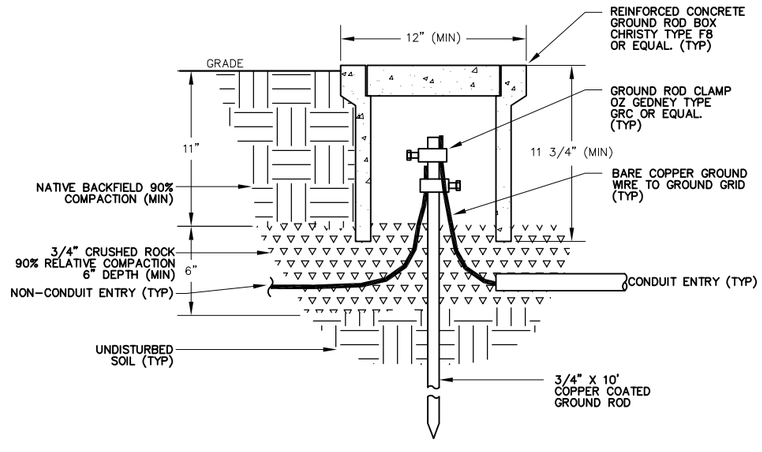

GIB — **GROUND INSPECTION BOX DETAIL**
NOT TO SCALE

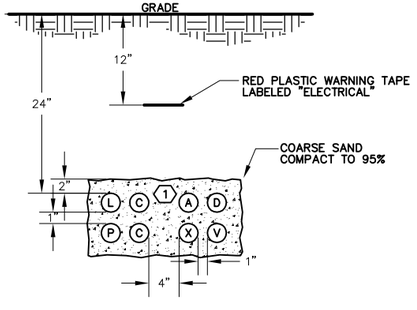

LVC — **LOW VOLTAGE NON-DUCT BANK SECTION**
NOT TO SCALE

NOTES:
1. NUMBER OF CONDUITS PER PLANS AND SCHEDULE. MAXIMUM DEPTH OF TRENCH SHALL BE 42". DESIGN TRENCH DESIGN AND INSTALL TRENCH TO MAINTAIN 6" VERTICAL CLEARANCE AND 12" HORIZONTAL CLEARANCE FROM PIPES.
2. P, L, OR C DESIGNATION FOR POWER OR CONTROL CONDUITS.
3. A, D, V, OR X DESIGNATION FOR COMMUNICATION (TELEPHONE, DATA, VIDEO, OR INSTRUMENTATION) CONDUITS.
4. USE CONDUIT SPACERS TO SUPPORT CONDUITS AND MAINTAIN SPACING (3' INTERVALS)

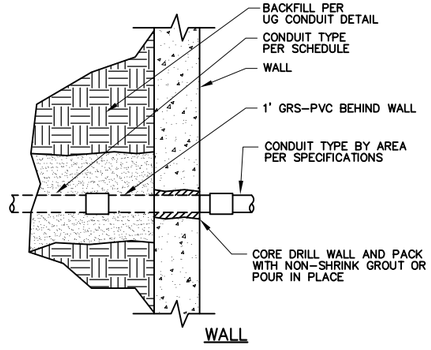

ECT — **EXPOSED CONDUIT TRANSITION DETAIL**
NOT TO SCALE

REGISTERED PROFESSIONAL ENGINEER
THOMAS P. FRISCH
No. E15761
ELECTRICAL
STATE OF CALIFORNIA
05/27/2020

DESIGN T. FRISCH
DRAWN N. CONANT
CHECKED M. FRISCH
APPROVED M. FISHER

FRISCH ENGINEERING, INC.
CONSULTING ELECTRICAL ENGINEERS
3405 FOLSOM BLVD, UNIT 600
SACRAMENTO, CA 95816
PH 916 353 1025
WWW.FRISCHENGINEERING.COM

FILE: I:\DWG\CAD\17-082.DWG
DATE: MAY 28, 2020 TIME: 11:02:22AM

WATERWORKS ENGINEERS
2260 Douglas Blvd, Suite 150 • Roseville, CA 95661 • 916-780-2888

CITY OF MORRO BAY
WATER RECLAMATION FACILITY
LIFT STATION AND OFFSITE PIPELINES

ELECTRICAL
DETAILS 1

DATE MAY 2020
PROJECT NUMBER 17-082
DRAWING NUMBER 00-E-02
SHEET NUMBER 183

CONFORMED SET - DEC 2020

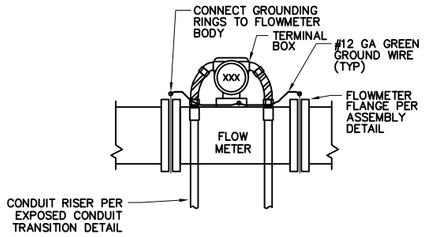

FM – **FLOWMETER DETAIL**
NOT TO SCALE

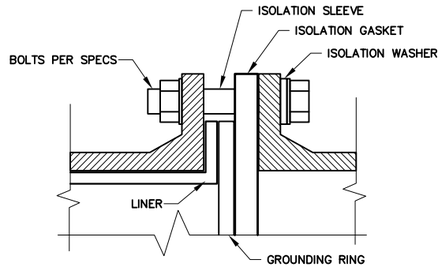

FLG – **FLOWMETER FLANGE ASSEMBLY**
NOT TO SCALE

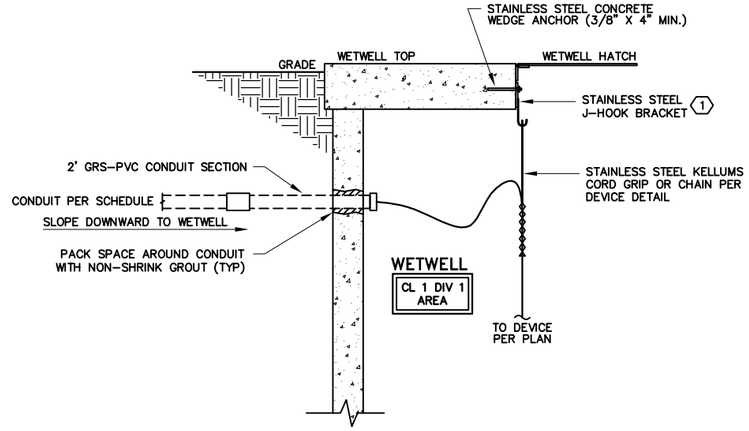

WWE – **WETWELL ENTRY DETAIL**
NOT TO SCALE

NOTES: 1 CUSTOM MANUFACTURERED J-HOOK ASSEMBLY CONSISTING OF STAINLESS STEEL PLATE WITH STAINLESS STEEL J-HOOKS WELDED TO PLATE. PROVIDE ONE HOOK PER WETWELL CABLE.

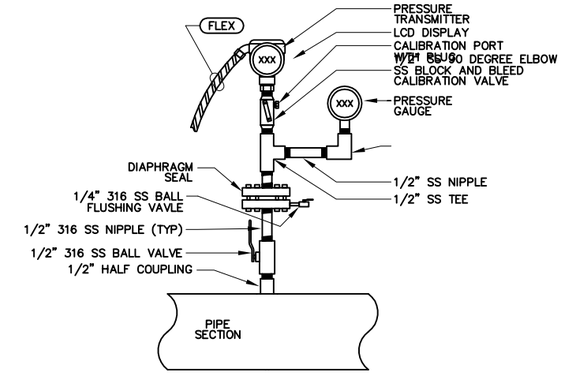

PT – **PRESSURE TRANSMITTER DETAIL**
NOT TO SCALE

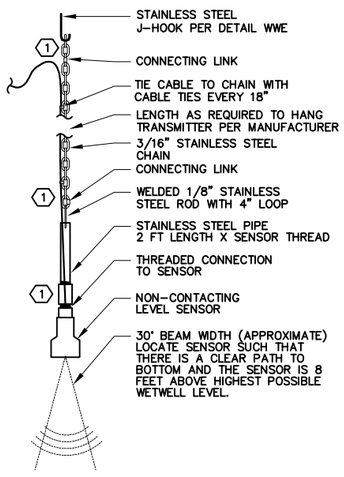

ULT – **ULTRASONIC TRANSMITTER DETAIL**
NOT TO SCALE

NOTES: 1 ALL HARDWARE TO BE 316 STAINLESS STEEL

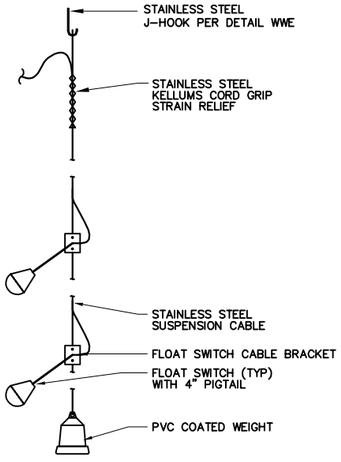

FLTS – **FLOAT SWITCH DETAIL**
NOT TO SCALE

REGISTERED PROFESSIONAL ENGINEER THOMAS P. FRISCH No. E15761 ELECTRICAL STATE OF CALIFORNIA
05/27/2020

DESIGN T. FRISCH
DRAWN N. CONANT
CHECKED M. FRISCH
APPROVED M. FISHER

FRISCH ENGINEERING, INC.
CONSULTING ELECTRICAL ENGINEERS
13405 FOLSOM BLVD, UNIT 600
FOLSOM, CA 95630
PH 916 353 1025
WWW.FRISCHENGINEERING.COM
FILE: 1805H-E00E03.DWG
DATE: MAY 28, 2020 TIME: 6:53:16PM

WATERWORKS ENGINEERS
2260 Douglas Blvd, Suite 150 • Roseville, CA 95661 • 916-780-2888

CITY OF MORRO BAY
WATER RECLAMATION FACILITY
LIFT STATON AND OFFSITE PIPELINES

ELECTRICAL
DETAILS 2

DATE MAY 2020
PROJECT NUMBER 17-082
DRAWING NUMBER 00-E-03
SHEET NUMBER 184

CONFORMED SET - DEC 2020

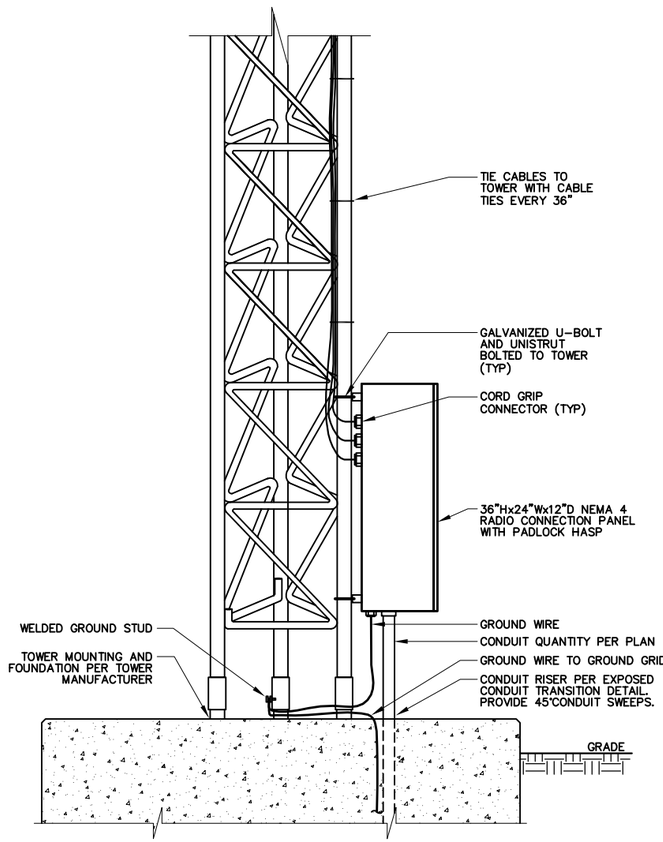

RTP — **RADIO TOWER CONNECTION PANEL**
NOT TO SCALE

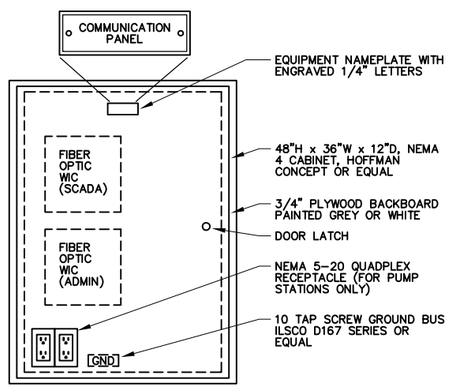

CP — **COMMUNICATION PANEL**
NOT TO SCALE

NOTES: 1. PANEL SHALL BE NEMA 1 WHEN INSTALLED INDOORS AT PUMP STATIONS. PANEL SHALL BE NEMA 3R WHEN INSTALLED OUTDOORS AT STREAM LEVEL MONITORING STATION.

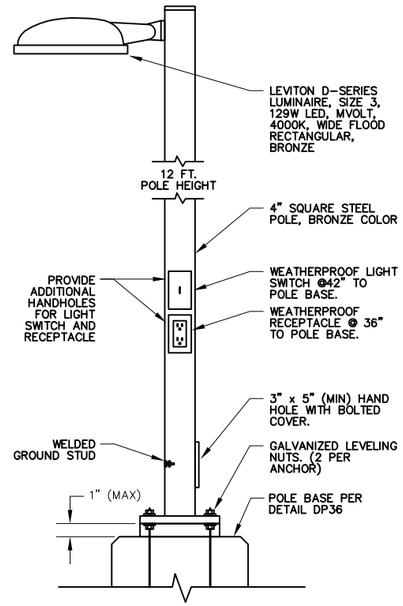

AL — **AREA LIGHT DETAIL**
NOT TO SCALE

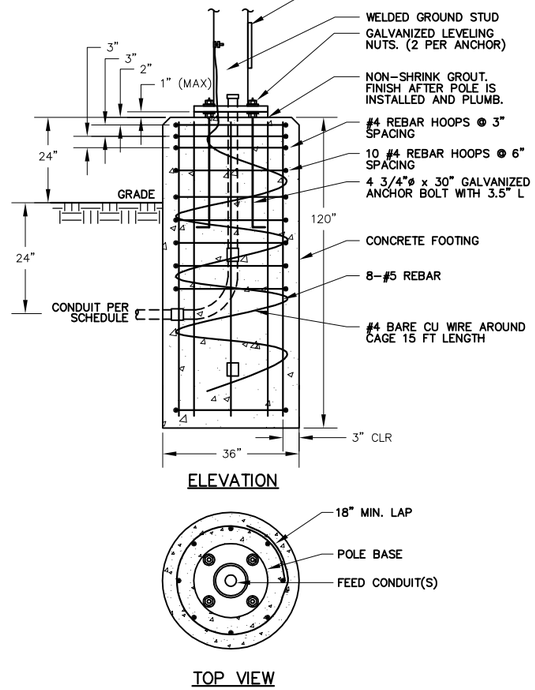

DP36 — **POLE DRILLED PIER DETAIL 36**
NOT TO SCALE

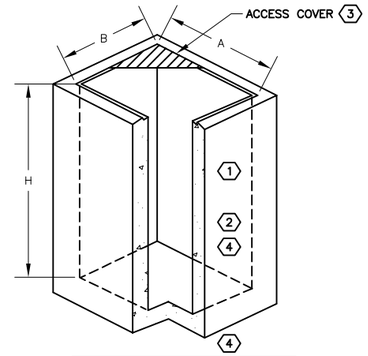

TYPE/ SIZE	DIMENSIONS (MIN)		
	A	B	H
S644	6'	4'	4'
S534	5'	3'	4'
S344	3'	4'	4'
S334	3'	3'	4'
S244	2'	4'	4'
S234	2'	3'	4'
S224	2'	2'	4'

VLT — **ELECTRICAL VAULT DETAIL**
NOT TO SCALE

NOTES:
1. WIRES IN "P", "L" & "C" SERIES CONDUITS SHALL BE SUPPORTED ON ONE SIDE OF VAULT AND WIRES FOR "A", "D" & "S" SERIES ON OTHER SIDE. ALL WIRE SHALL BE STRAPPED TO CABLE SUPPORTS.
2. VAULTS SHALL BE CONSTRUCTED OF RE-INFORCED CONCRETE. PROVIDE VAULT BASE AND GRADE RING(S) AS NECESSARY TO MEET OR EXCEED REQUIRED DEPTH.
3. ACCESS COVERS SHALL BE 1/4" GALVANIZED STEEL CHECKER PLATE, HINGED, 2 PIECE, BOLT DOWN, WITH SPRING ASSIST. COVERS SHALL BE TRAFFIC LOAD RATED. LABEL LID "COMB FIBER OPTIC" WITH WELDED LETTERING.
4. CAULK AND GROUT SEAMS AND AROUND CONDUIT ENTRIES TO SMOOTH FINISH AND PREVENT LEAKS. CONDUIT ENTRANCES SHALL BE PER ENCASED CONDUIT END DETAIL. ATTACH CONDUIT LABELS TO WALL ABOVE CONDUIT.
5. OVER-EXCAVATE AND BACKFILL 18" OF 3/4" CRUSHED ROCK BELOW VAULT. BACKFILL AROUND VAULT WALLS WITH NATIVE SOIL.

REGISTERED PROFESSIONAL ENGINEER — THOMAS P. FRISCH — No. E15761 — ELECTRICAL — STATE OF CALIFORNIA

05/27/2020

DESIGN T. FRISCH
DRAWN N. CONANT
CHECKED M. FRISCH
APPROVED M. FISHER

FRISCH ENGINEERING, INC.
CONSULTING ELECTRICAL ENGINEERS
3305 FOLSOM BLVD, UNIT 600
SACRAMENTO, CA 95816
PH 916 353 1025
WWW.FRISCHENGINEERING.COM
FILE: 17-082-DETAILS-05.DWG
DATE: MAY 28, 2020 TIME: 4:05:00PM

WATERWORKS ENGINEERS
2260 Douglas Blvd. Suite 150 • Roseville, CA 95661 • 916-780-2888

CITY OF MORRO BAY
WATER RECLAMATION FACILITY
LIFT STATON AND OFFSITE PIPELINES

ELECTRICAL
DETAILS 3

DATE MAY 2020
PROJECT NUMBER 17-082
DRAWING NUMBER 00-E-04
SHEET NUMBER 185

CONFORMED SET - DEC 2020

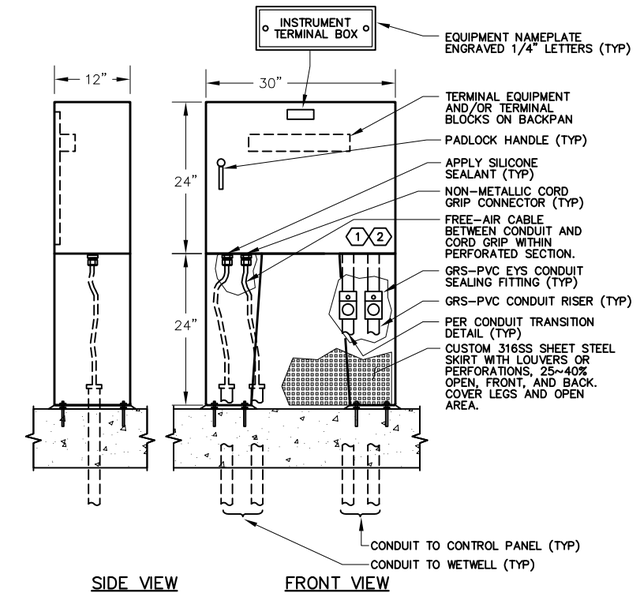

NOTES:
1. USE ALL STAINLESS STEEL HARDWARE. SEAL BOX PENETRATIONS WITH SILICONE GLUE.
2. MOUNT PANEL ON 3/8" SS EPOXY ANCHORS WITH DOUBLE NUT LEVELING. GROUT SPACE BELOW PANEL LEGS.

ITP – INSTRUMENT TERMINATION PANEL

NEMA 4X, 316SS, NOT TO SCALE

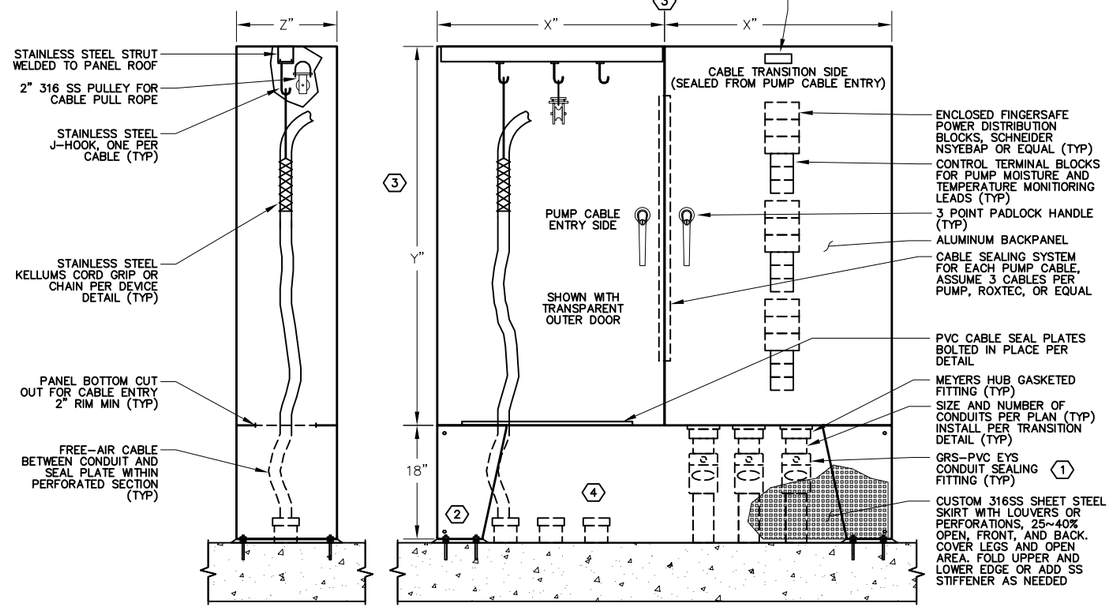

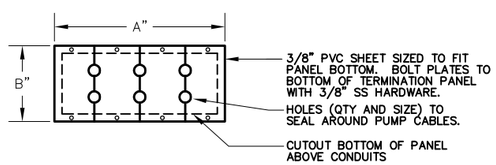

PVC CABLE SEAL PLATES

NOTES:
1. FILL EYS WITH "CHICO" OR EQUAL CONDUIT SEALING COMPOUND AFTER INSPECTION AND TESTING IS COMPLETED.
2. MOUNT PANEL ON 3/8" SS EPOXY ANCHORS WITH DOUBLE NUT LEVELING. GROUT SPACE BELOW PANEL LEGS.
3. EACH OF TWO PANEL SIZES (SIDE BY SIDE) SHALL BE: PUMP STATION A: A=8", B=20", X=30", Y=42", Z=12"
   EACH OF TWO PANEL SIZES (SIDE BY SIDE) SHALL BE: PUMP STATION B: A=12", B=25", X=36", Y=60", Z=16"
4. SEAL CONDUITS WITH DUCT SEAL, LARGER PUMPS HAVE MULTIPLE CABLES/CONDUITS.

PTP – PUMP TERMINATION PANEL

NEMA 4X, 316SS, NOT TO SCALE

REGISTERED PROFESSIONAL ENGINEER
THOMAS P. FRISCH
No. E15761
ELECTRICAL
STATE OF CALIFORNIA
05/27/2020

DESIGN T. FRISCH
DRAWN N. CONANT
CHECKED M. FRISCH
APPROVED M. FISHER

FRISCH ENGINEERING, INC.
CONSULTING ELECTRICAL ENGINEERS
3485 FOLSOM BLVD, UNIT 600
FOLSOM, CA 95630
PH 916 353 1025
WWW.FRISCHENGINEERING.COM
FILE: 17-082-00E-05.DWG
DATE: MAY 29, 2020 TIME: 11:36:11 AM

WATERWORKS ENGINEERS
2260 Douglas Blvd, Suite 150 • Roseville, CA 95661 • 916-780-2888

CITY OF MORRO BAY
WATER RECLAMATION FACILITY
LIFT STATION AND OFFSITE PIPELINES

ELECTRICAL
SUMP TERMINATION PANELS

DATE MAY 2020
PROJECT NUMBER 17-082
DRAWING NUMBER 00-E-05
SHEET NUMBER 186

CONFORMED SET - DEC 2020

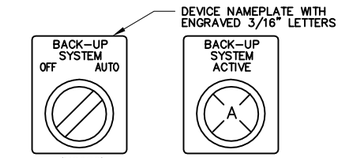

BUTTON LAYOUT

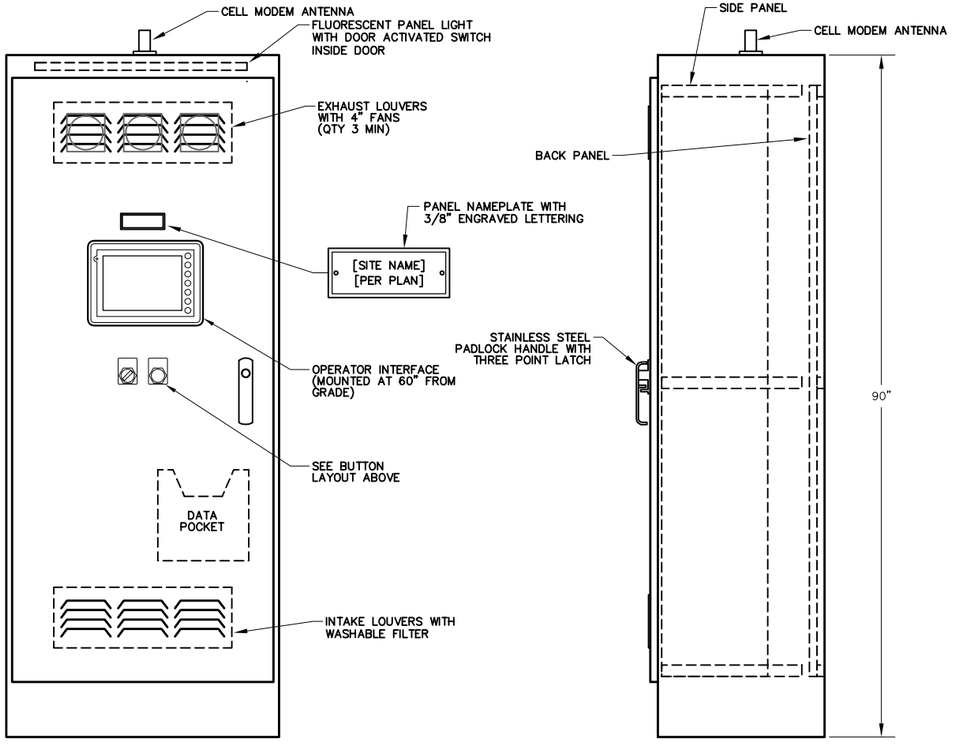

FRONT ELEVATION

SIDE ELEVATION

ELEVATION
SCALE: 1" = 10"

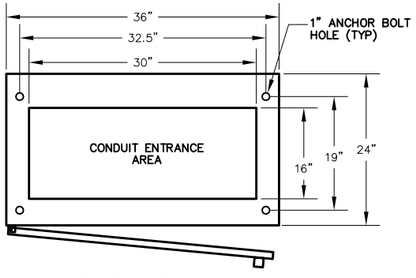

BASE PLAN

PANEL FABRICATION METHODS

1. FREESTANDING, OPEN BOTTOM.
2. OUTER DOOR SEALED WITH RUBBERIZED FOAM GASKET.
3. PANEL SHALL BE FABRICATED FROM PAINT BOND GALVANEAL SHEET STEEL.
4. 12 GAUGE EXTERIOR AND 14 GAUGE INTERIOR.
5. ALL SEAMS SHALL HAVE CONTINUOUS WELD GROUND SMOOTH.
6. DOOR TO BE PADLOCKABLE WITH HEAVY DUTY 3 POINT LATCH.
7. DOOR HINGES AND PINS SHALL BE CONTINUOUS, HEAVY DUTY.
8. NO SCREWS, RIVETS, OR BOLTS SHALL PROTRUDE EXTERNALLY.
9. INTERNAL SCREWS, RIVETS, BOLTS, AND NUTS SHALL BE MACHINE THREAD INTO TAPPED BACKPAN.
10. EXTERIOR PANEL COLOR: ANSI 61 GRAY.
11. MOUNTING PAN AND INTERIOR DOOR COLOR: WHITE.
12. FABRICATION AND WIRING SHALL CONFORM TO U.L. AND NEMA STANDARDS.
13. ALL WIRING SHALL BE PERMANENTLY LABELED WITH WIRE MARKERS ON BOTH ENDS.
14. WIRING DIAGRAMS SHALL BE PLACED IN A PLASTIC DRAWING HOLDER PERMANENTLY ATTACHED TO THE INSIDE OF THE FRONT DOOR.
15. AS – BUILT WIRING DIAGRAMS SHALL BE SHIPPED WITH EQUIPMENT.
16. HOFFMAN TYPE 12 FREE–STANDING, OR EQUAL.

GENERAL NOTES:

1. REPRESENTATIVE OF MAJOR COMPONENTS ONLY. ACTUAL BACKPAN LAYOUT SHALL BE SIMILAR TO LAYOUT SHOWN. SUBMIT SCALED BACKPAN LAYOUT FOR REVIEW BY ENGINEER.
2. QUANTITY OF TERMINAL BLOCKS AND RELAYS SHALL BE AS DETERMINED BY P&IDS AND EXAMPLE I/O WIRING DIAGRAM

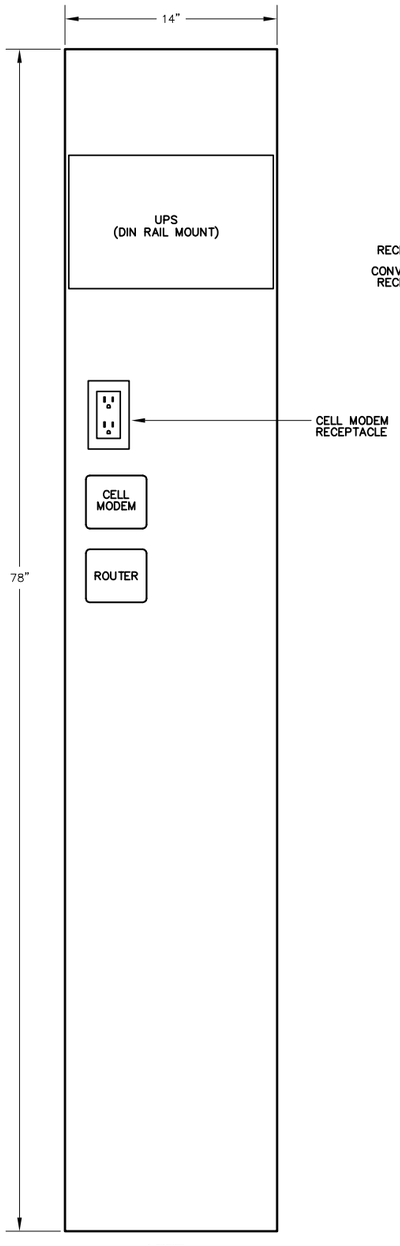

LEFT

SIDEPAN LAYOUT
SCALE: 1" = 5"

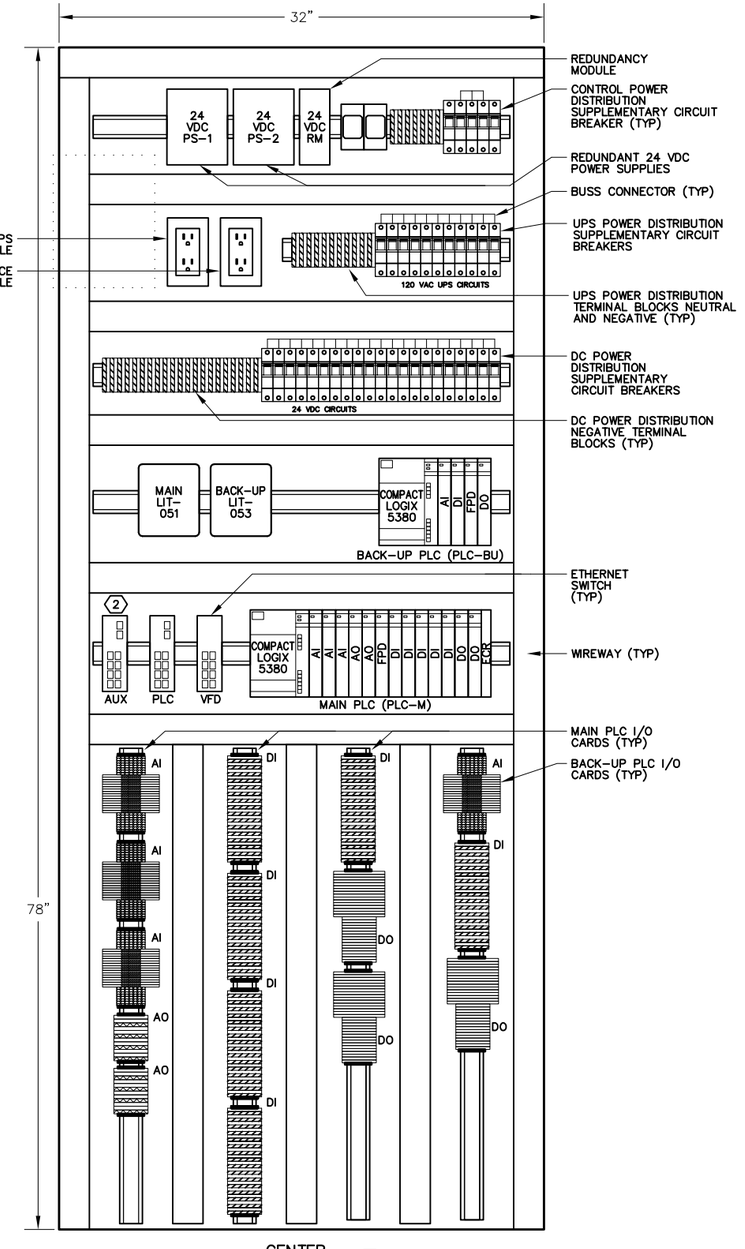

CENTER (1)

BACKPAN LAYOUT
SCALE: 1" = 5"

LAYOUT REFERENCED NOTES:

(1) WIRE I/O TO TERMINAL BLOCK PER EXAMPLE I/O WIRING DIAGRAMS.

(2) ADDITIONAL FIBER OPTIC (AUX) SWITCH ONLY FOR PUMP STATION B. SEE NETWORK TOPOLOGY DWG 00-I-02

REGISTERED PROFESSIONAL ENGINEER
THOMAS P. FRISCH
No. E15761
ELECTRICAL
STATE OF CALIFORNIA

05/27/2020

DESIGN T. FRISCH
DRAWN N. CONANT
CHECKED M. FRISCH
APPROVED M. FISHER

FRISCH ENGINEERING, INC.
CONSULTING ELECTRICAL ENGINEERS
3305 FOLSOM BLVD, UNIT 600
SACRAMENTO, CA 95820
PH 916 353 1025
WWW.FRISCHENGINEERING.COM

FILE: 15-1145-00E06.DWG
DATE: MAY 28, 2020 TIME: 11:03:00AM

WATERWORKS ENGINEERS
2260 Douglas Blvd, Suite 150 • Roseville, CA 95661 • 916-780-2888

CITY OF MORRO BAY
WATER RECLAMATION FACILITY
LIFT STATION AND OFFSITE PIPELINES

ELECTRICAL
CONTROL PANEL ELEVATION AND BACKPAN LAYOUT

DATE MAY 2020
PROJECT NUMBER 17-082
DRAWING NUMBER 00-E-06
SHEET NUMBER 187

CONFORMED SET - DEC 2020

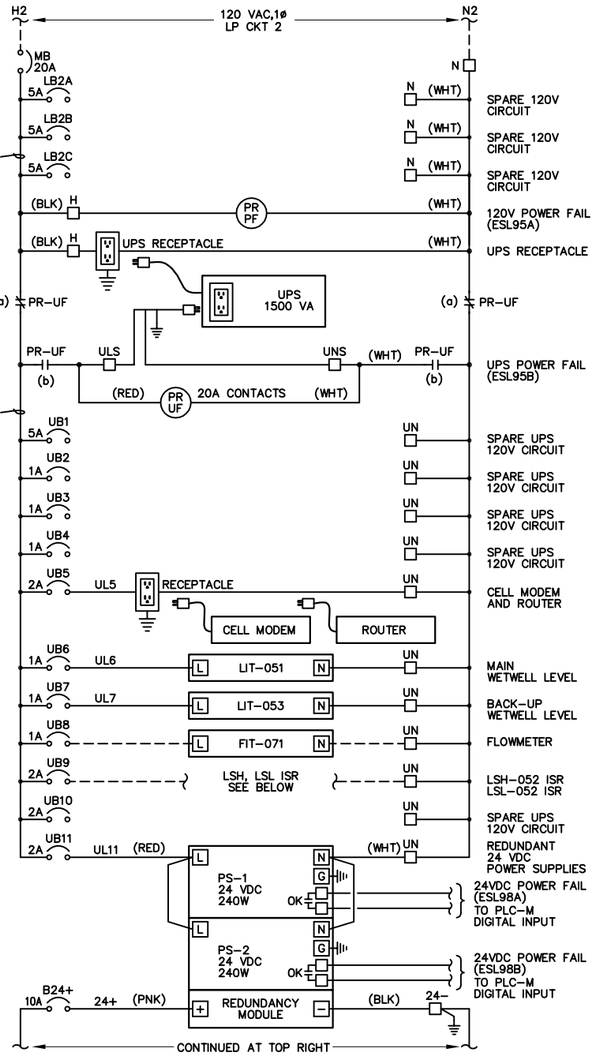

POWER DISTRIBUTION DIAGRAM

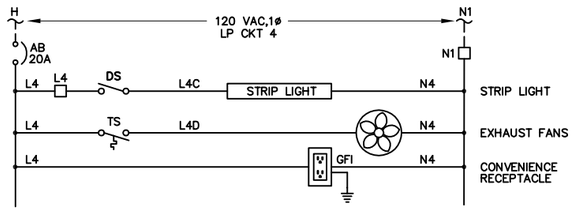

AUXILLIARY POWER DIAGRAM

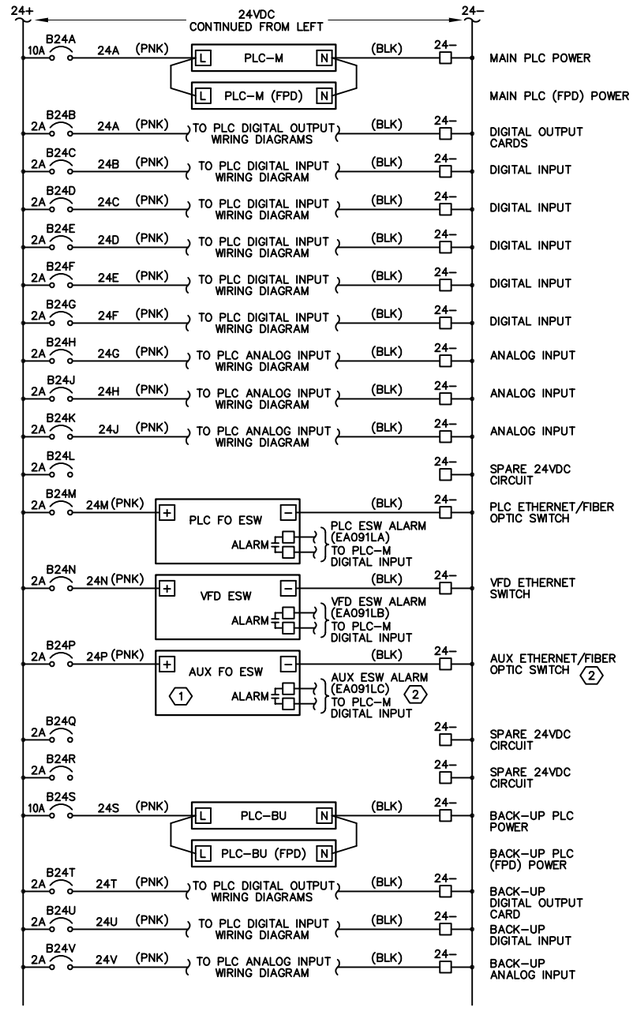

24VDC DISTRIBUTION DIAGRAM – CONTINUED

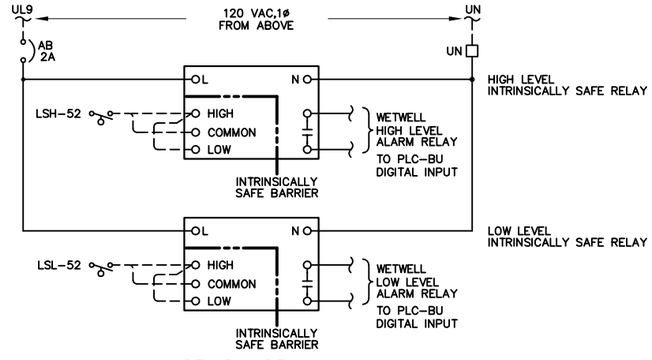

ISR DIAGRAM

ISR REPLAYS LOCATED IN INSTRUMENT JUNCTION BOX

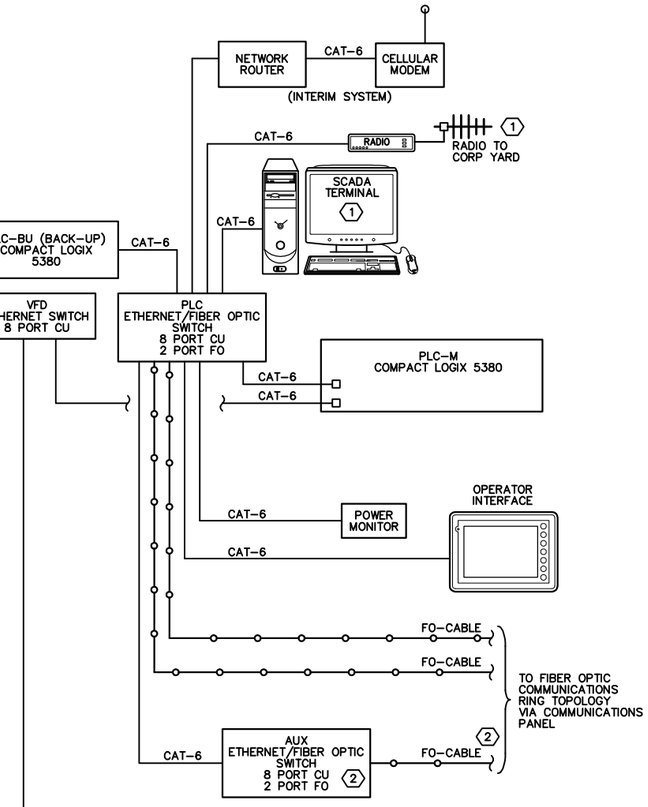

COMMUNICATION BLOCK DIAGRAM

REFERENCED NOTES:

1. SCADA TERMINAL AND RADIO LINK ONLY FOR PUMP STATION A. SEE NETWORK TOPOLOGY DWG 00-I-02
2. AUX SWITCH AND FIBER CONNECTION ONLY FOR PUMP STATION B. SEE NETWORK TOPOLOGY DWG 00-I-02

REGISTERED PROFESSIONAL ENGINEER
THOMAS P. FRISCH
No. E15761
ELECTRICAL
STATE OF CALIFORNIA
05/27/2020

DESIGN T. FRISCH
DRAWN N. CONANT
CHECKED M. FRISCH
APPROVED M. FISHER

FRISCH ENGINEERING, INC.
CONSULTING ELECTRICAL ENGINEERS
3405 FOLSOM BLVD, UNIT 600
SACRAMENTO, CA 95816
PH 916 353 1025
WWW.FRISCHENGINEERING.COM

FILE: 17-082-ELEC-DWG.DWG
DATE: MAY 28, 2020 TIME: 11:03:10AM

WATERWORKS ENGINEERS
2260 Douglas Blvd, Suite 150 • Roseville, CA 95661 • 916-780-2888

CITY OF MORRO BAY
WATER RECLAMATION FACILITY
LIFT STATON AND OFFSITE PIPELINES

ELECTRICAL
CONTROL PANEL
POWER DISTRIBUTION DIAGRAM

DATE MAY 2020
PROJECT NUMBER 17-082
DRAWING NUMBER 00-E-07
SHEET NUMBER 188

CONFORMED SET - DEC 2020

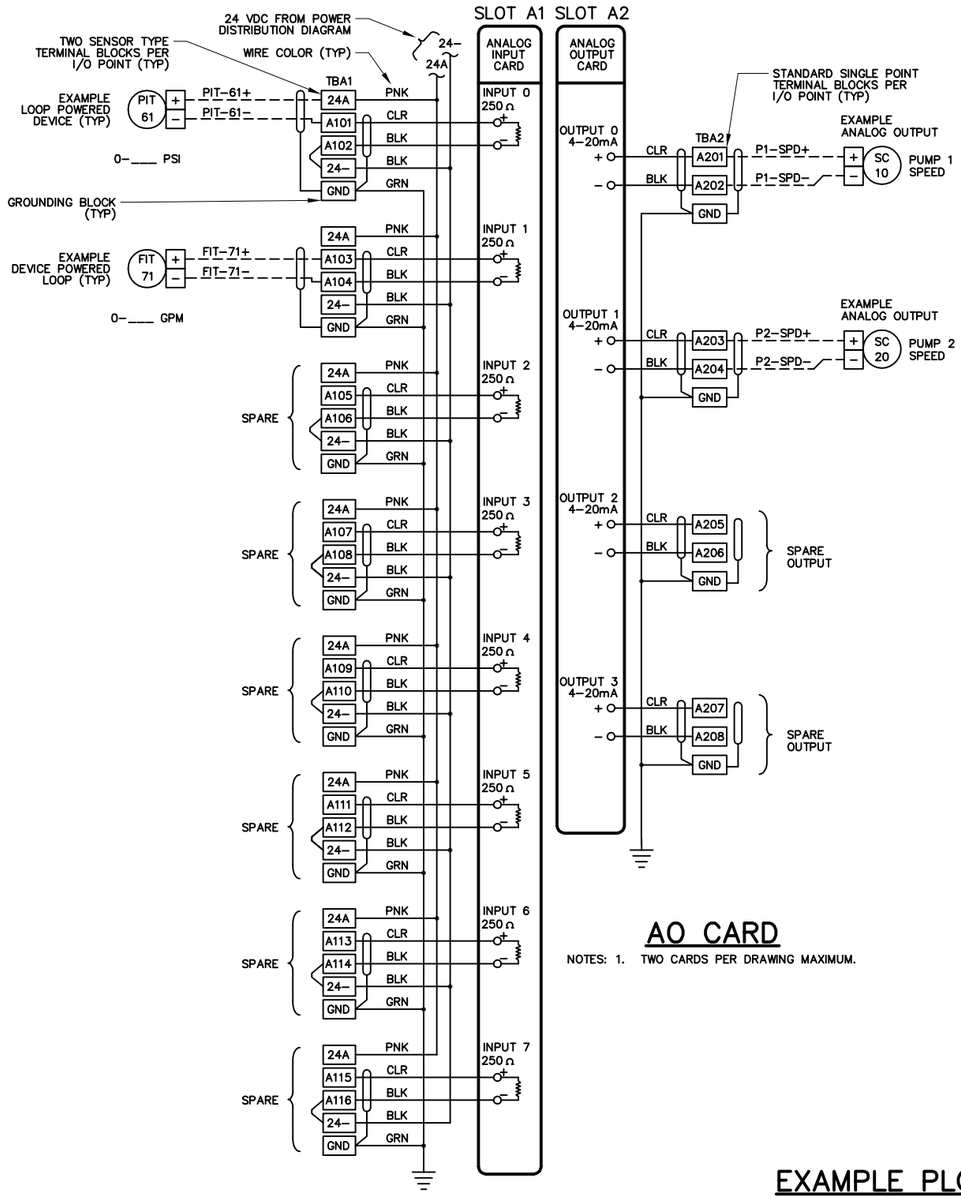

AO CARD

NOTES: 1. TWO CARDS PER DRAWING MAXIMUM.

AI CARD

NOTES: 1. TWO CARDS PER DRAWING MAXIMUM.
2. USE MANUFACTURED TERMINAL BLOCK JUMPERS WHERE POSSIBLE

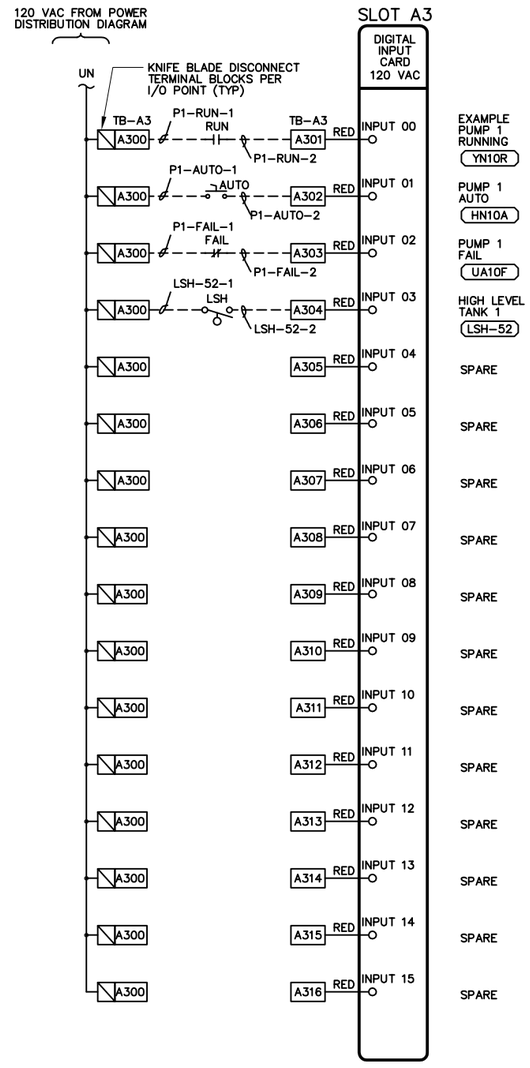

DI CARD

NOTES: 1. TWO CARDS PER DRAWING MAXIMUM.

EXAMPLE PLC I/O WIRING DIAGRAMS

NOTES: 1. WIRE SPARE PLC I/O POINTS TO TERMINAL BLOCKS.
2. EXAMPLE I/O POINTS SHOWN. THIS DRAWING INTENDED TO SHOW I/O WIRING ONLY.
3. I/O TYPE AND NUMBER OF POINTS AND CARDS REQUIRED IS DETERMINED BY P&ID DRAWINGS.
4. MINIMUM 20% SPARE I/O POINTS PER I/O TYPE.
5. INTERNAL PANEL PLC I/O CARD WIRE NUMBERS SHALL BE BUILT AS SHOWN IN EXAMPLE BELOW.

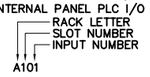

6. FIELD WIRES SHALL BE LABELED WITH ACRONYM OF CONTROL PANEL ID (NOT SHOWN) AND DEVICE: SEE EXAMPLES.

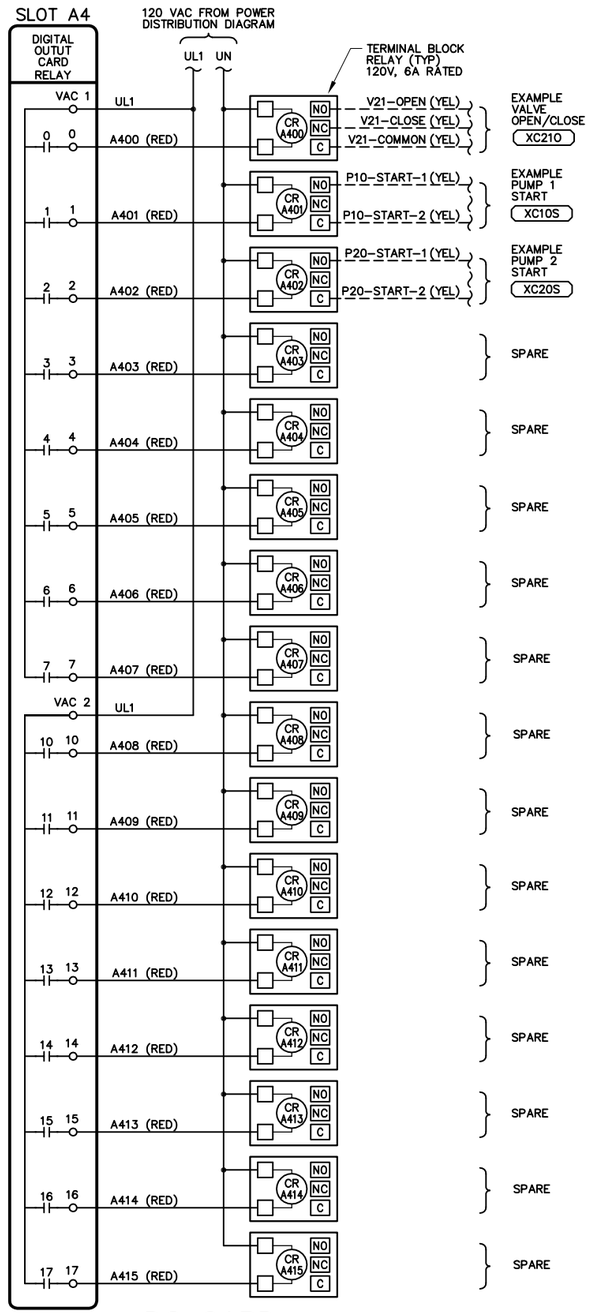

DO CARD

NOTES: 1. TWO CARDS PER DRAWING MAXIMUM.



05/27/2020

DESIGN T. FRISCH
DRAWN N. CONANT
CHECKED M. FRISCH
APPROVED M. FISHER

FRISCH ENGINEERING, INC.
CONSULTING ELECTRICAL ENGINEERS
3485 FOLSOM BLVD, UNIT 600
RANCHO CORDOVA, CA 95742
PH 916 353 1025
WWW.FRISCHENGINEERING.COM
FILE: 17-082 00-E-08.DWG
DATE: MAY 28, 2020 TIME: 11:03:34AM

WATERWORKS ENGINEERS
2260 Douglas Blvd, Suite 150 • Roseville, CA 95661 • 916-780-2888

CITY OF MORRO BAY
WATER RECLAMATION FACILITY
LIFT STATON AND OFFSITE PIPELINES

ELECTRICAL
CONTROL PANEL
POWER DISTRIBUTION DIAGRAM

DATE MAY 2020
PROJECT NUMBER 17-082
DRAWING NUMBER 00-E-08
SHEET NUMBER 189

CONFORMED SET - DEC 2020

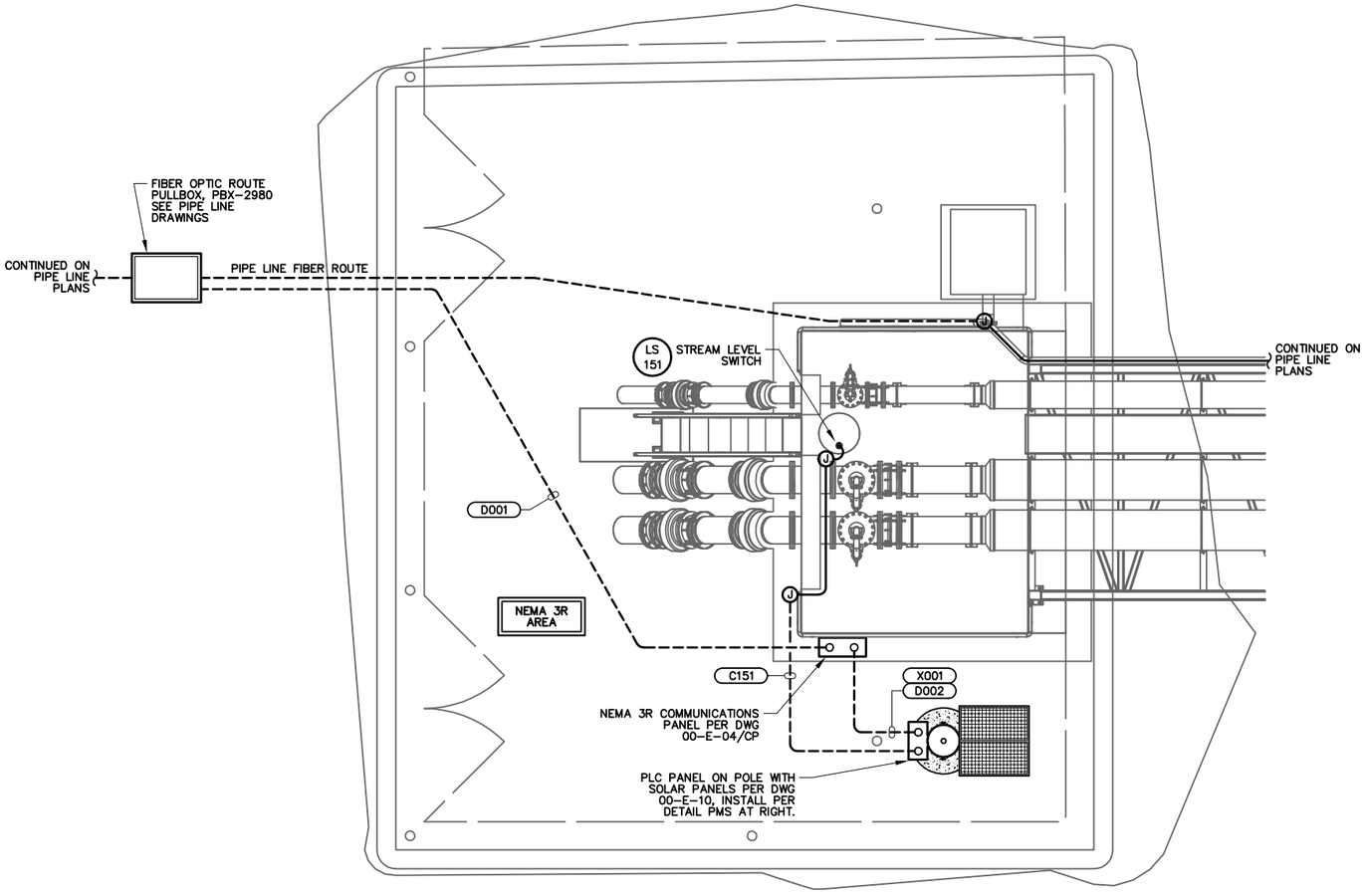

BRIDGE SUMP LEVEL MONITORING ELECTRICAL PLAN

SCALE: 1/4" = 1'

0 4 8
(Approximate Scale In Feet)

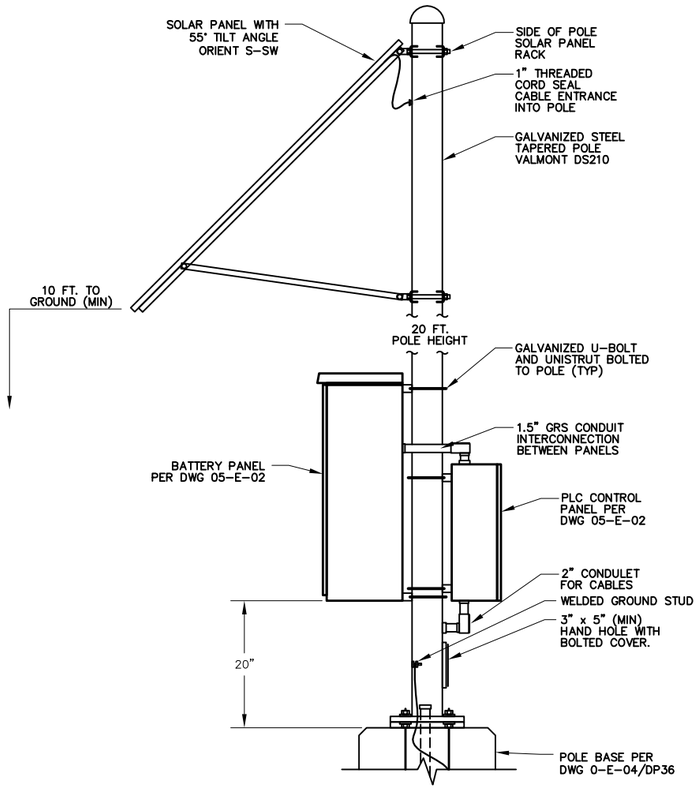

PMS – POLE MOUNTED SOLAR DETAIL

NOT TO SCALE

ELECTRICAL PLAN NOTES:

1. SEE ELECTRICAL SYMBOLS AND ABBREVIATIONS DRAWING FOR SYMBOL DEFINITION.
2. ALL WORK SHALL CONFORM TO LOCAL CODES AND NATIONAL ELECTRIC CODE.
3. SITEPLAN ACCURATE FOR ELECTRICAL WORK ONLY. COORDINATE WITH OTHER DISCIPLINES.
4. CONFIRM HOOKUP REQUIREMENTS FOR ELECTRICAL AND MECHANICAL EQUIPMENT PRIOR TO INSTALLING UNDERGROUND CONDUIT AND STUB-UPS. MISSING CONDUITS, INCORRECT SIZING, OR OTHER ISSUES MUST BE BROUGHT TO THE ATTENTION OF ENGINEER PRIOR TO BACKFILL.
5. CONDUIT ROUTING IS SHOWN GENERALLY DIAGRAMMATIC AND DOES NOT INDICATE TRENCH WIDTH OR TRENCH LAYOUT. FOR CONDUITS OUTSIDE BUILDINGS, IF CONTRACTOR WANTS TO RUN CONDUITS IN ROUTES OTHER THAN THOSE SHOWN FOR ANY REASON, THEN HE SHALL SUBMIT THE PLAN FOR APPROVAL PRIOR TO INSTALLATION. SPECIFY REASON FOR CHANGE.
6. INSTALL NON-UTILITY CONDUITS PER DRAWING DETAILS AND SPECIFICATIONS SECTION 16110.
7. CONDUITS SIZE, TYPE AND FILL DEFINED BY TAG NAME IN CONDUIT AND WIRE ROUTING SCHEDULE.
8. INSTALL UNDERGROUND NON-DUCTBANK CONDUITS PER ELECTRICAL DETAIL LVC.
9. CONDUIT TRANSITIONS SHALL BE PER EXPOSED CONDUIT TRANSITION DETAIL ECT.
10. EXPOSED CONDUIT TYPE AND FITTINGS TO BE USED ABOVE TRANSITION SHALL BE PER AREA CLASSIFICATION DEFINED IN CONDUIT SPECIFICATIONS AND EQUIPMENT SPECIFIC DETAIL.
11. REPAIR SURFACE TO PREVIOUS CONDITION FOR ALL UNDERGROUND CONDUIT ROUTES. GROUT, CAULK, AND PAINT ANY PENETRATIONS INTO STRUCTURES FOR WATERTIGHT SEAL.
12. USE SS EXPANSION WEDGE ANCHORS OR EPOXY ANCHORS AS NECESSARY FOR EQUIPMENT MOUNTING.

CONDUIT & WIRE ROUTING SCHEDULE

	CONDUIT DETAILS						POWER WIRE		CONTROL WIRE		GROUND	NOTES
REV	TAG NO.	FROM	TO	QTY	SIZE	TYPE	QTY	SIZE	QTY	SIZE	SIZE	
	C151	SUMP LEVEL SWITCH	PLC PANEL	1	3/4"	SPEC	–	–	2	#14	#14	
	D001	FIBER NETWORK	COMMUNICATION PANEL	1	4"	SPEC	–	–	2	FO CABLE	–	
	D002	COMMUNICATION PANEL	PLC PANEL	1	4"	SPEC	–	–	2	FO CABLE	–	
	X001	COMMUNICATION PANEL	PLC PANEL	1	1"	SPEC	–	–	–	–	–	PULL ROPE

NOTES PERTAINING TO CONDUIT SCHEDULE:

1. CONDUIT TYPE "SPEC" IS AS DEFINED IN SPECIFICATIONS SECTION 16110 FOR NON-EXPOSED AND EXPOSED PORTIONS OF CONDUIT RUN.
2. SEE SPECIFICATIONS AND EXPOSED TRANSITION DETAIL OR EQUIPMENT SPECIFIC DETAIL FOR CONDUIT TRANSITION MATERIALS AND METHODS FROM BELOW GROUND TO EXPOSED PORTIONS OF RUN.
3. CONDUITS OVER 15 FT LENGTH (EITHER EMPTY OR WITH CONDUCTORS SIZED LESS THAN #8 AWG), SHALL INCLUDE A POLY PULL STRING. STRING SHALL BE TIED OFF AT EACH END.
4. FITTINGS, CONDULETS, BOXES AND COVERS SHALL MATCH DUTY OF ADJACENT PIPE, SEE SPECIFICATIONS 16110.
5. WIRE SIZING IN TABLE IS BASED ON COPPER CONDUCTORS, THHN INSULATION, WITH TYPE C STRANDING. OTHER CONDUCTOR TYPES, IF ALLOWED OR REQUIRED PER SPECIFICATION, MAY REQUIRE CONDUITS TO BE UPSIZED BY CONTRACTOR AND SUBMITTED FOR APPROVAL.
6. SEE GENERAL NOTES ON LIGHTING AND RECEPTACLE PLAN FOR CONDUIT REQUIREMENTS FOR ELECTRICAL DEVICES WITHOUT CONDUITS SHOWN, CONDUIT NUMBERS, OR NOT LISTED IN SCHEDULE.

REGISTERED PROFESSIONAL ENGINEER
THOMAS P. FRISCH
No. E15761
ELECTRICAL
STATE OF CALIFORNIA

05/27/2020

DESIGN T. FRISCH
DRAWN N. CONANT
CHECKED M. FRISCH
APPROVED M. FISHER

FRISCH ENGINEERING, INC.
CONSULTING ELECTRICAL ENGINEERS
3405 FOLSOM BLVD, UNIT 600
SACRAMENTO, CA 95816
PH 916 353 1025
WWW.FRISCHENGINEERING.COM

FILE: 1351-E-05-DWG
DATE: MAY 28, 2020 TIME: 11:03:45AM

WATERWORKS ENGINEERS
2260 Douglas Blvd. Suite 150 • Roseville, CA 95661 • 916-780-2888

CITY OF MORRO BAY
WATER RECLAMATION FACILITY
LIFT STATION AND OFFSITE PIPELINES

ELECTRICAL
PIPELINE BRIDGE
SUMP LEVEL MONITORNING
ELECTRICAL PLAN

DATE MAY 2020
PROJECT NUMBER 17-082
DRAWING NUMBER 05-E-01
SHEET NUMBER 190

CONFORMED SET - DEC 2020

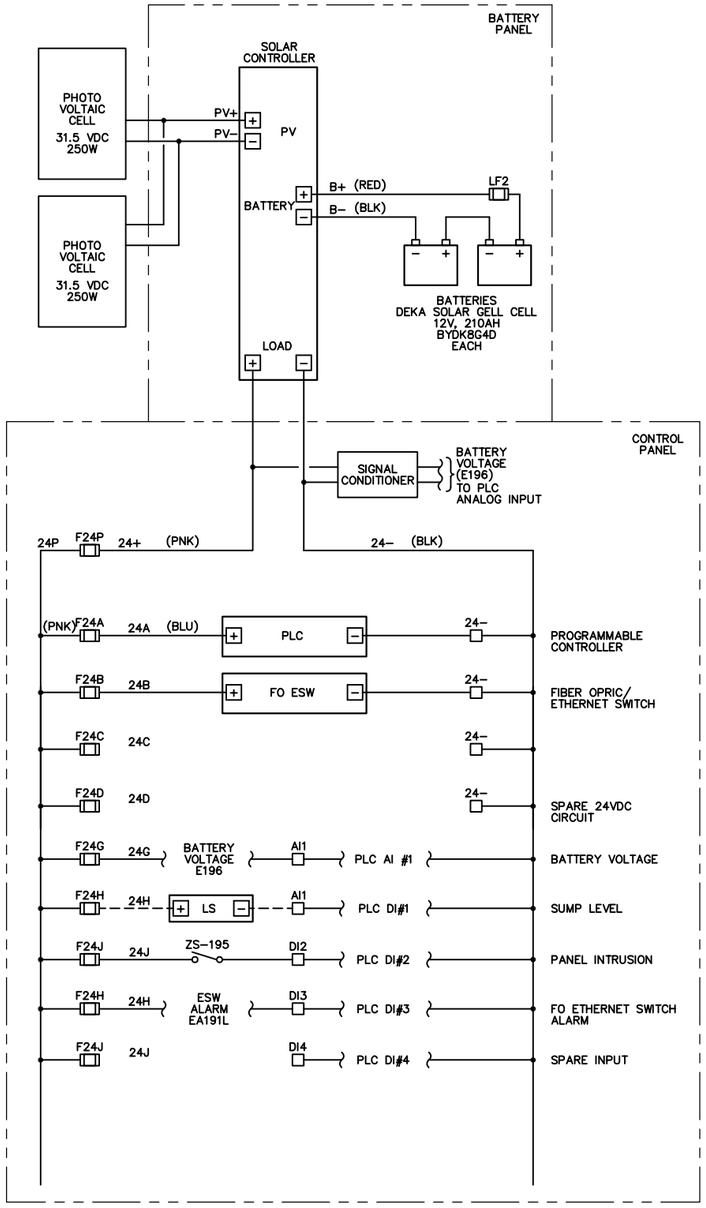

CONTROL PANEL WIRING SCHEMATIC

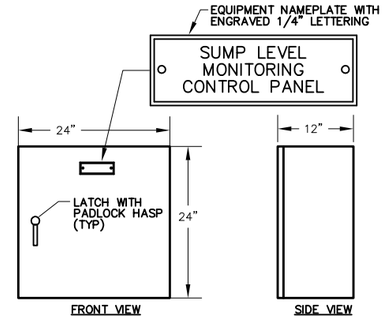

CP — **CONTROL PANEL ELEVATION**
NOT TO SCALE
NEMA 3R, PAINTED STEEL

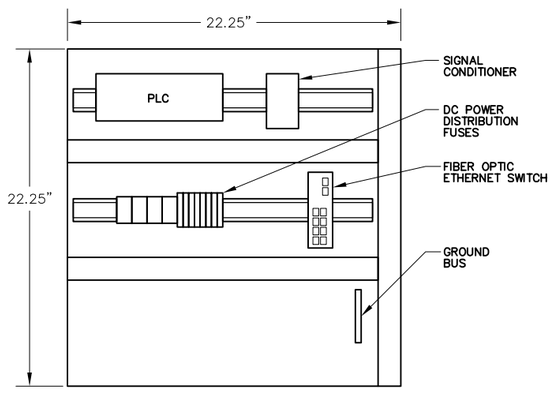

CONTROL PANEL BACKPAN LAYOUT

DRAWING REFERENCED NOTES:

1. RUN #12 WIRE DIRECT TO GROUND BUS. LIGHTNING ARRESTOR SHALL BE MALE/MALE TYPE.

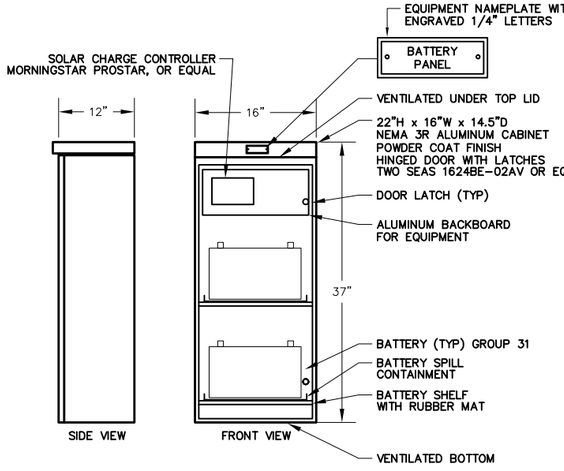

BAT — **BATTERY ENCLOSURE**
NOT TO SCALE, OUTER DOOR NOT SHOWN



05/27/2020

DESIGN T. FRISCH
DRAWN N. CONANT
CHECKED M. FRISCH
APPROVED M. FISHER

FRISCH ENGINEERING, INC.
CONSULTING ELECTRICAL ENGINEERS
3405 FOLSOM BLVD, UNIT 600
SACRAMENTO, CA 95816
PH 916 353 1025
WWW.FRISCHENGINEERING.COM

FILE: 17-082-05-E-02.DWG
DATE: MAY 28, 2020 TIME: 11:03:54AM

WATERWORKS ENGINEERS
2260 Douglas Blvd, Suite 150 • Roseville, CA 95661 • 916-780-2888

CITY OF MORRO BAY
WATER RECLAMATION FACILITY
LIFT STATON AND OFFSITE PIPELINES

ELECTRICAL
PIPELINE BRIDGE
SUMP LEVEL MONITORNING
CONTROL PANEL

DATE MAY 2020
PROJECT NUMBER 17-082
DRAWING NUMBER 05-E-02
SHEET NUMBER 191

CONFORMED SET - DEC 2020

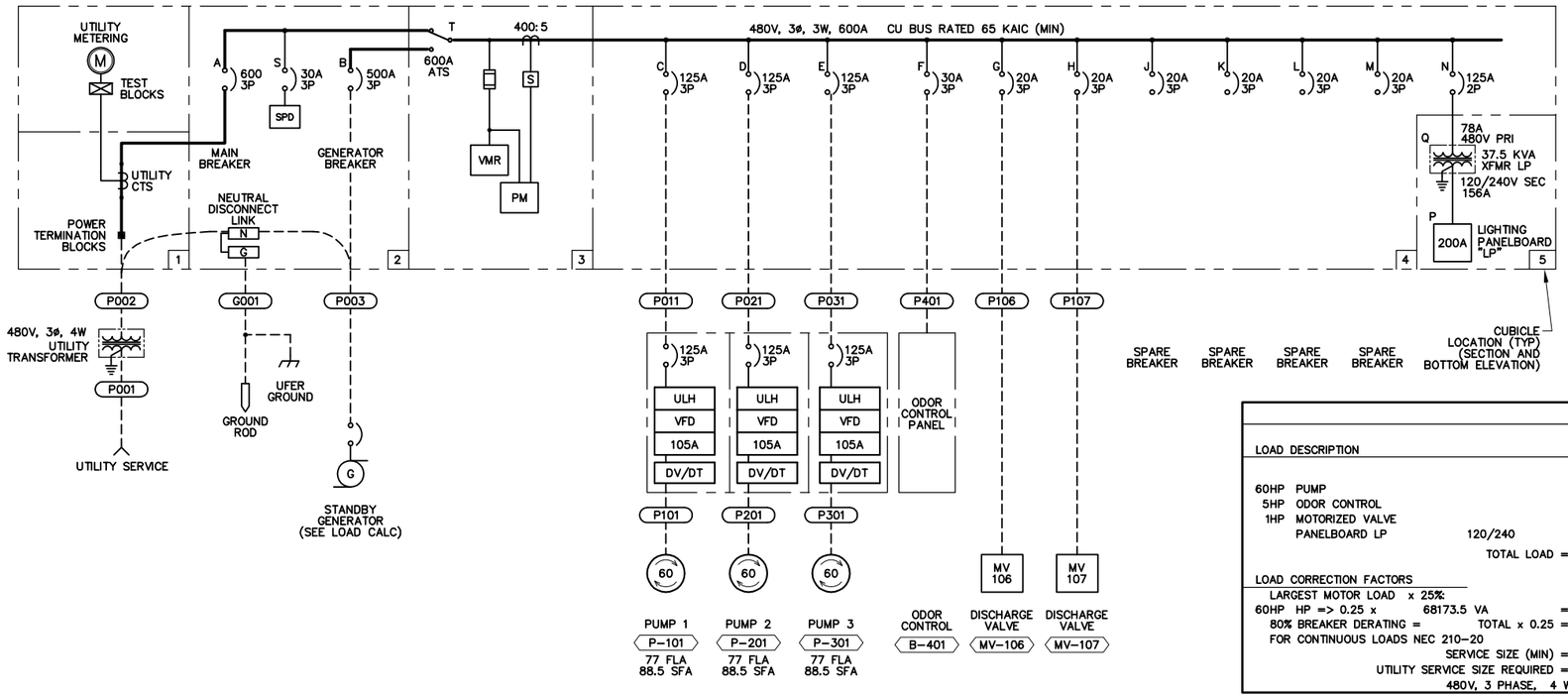

ONE-LINE DIAGRAM

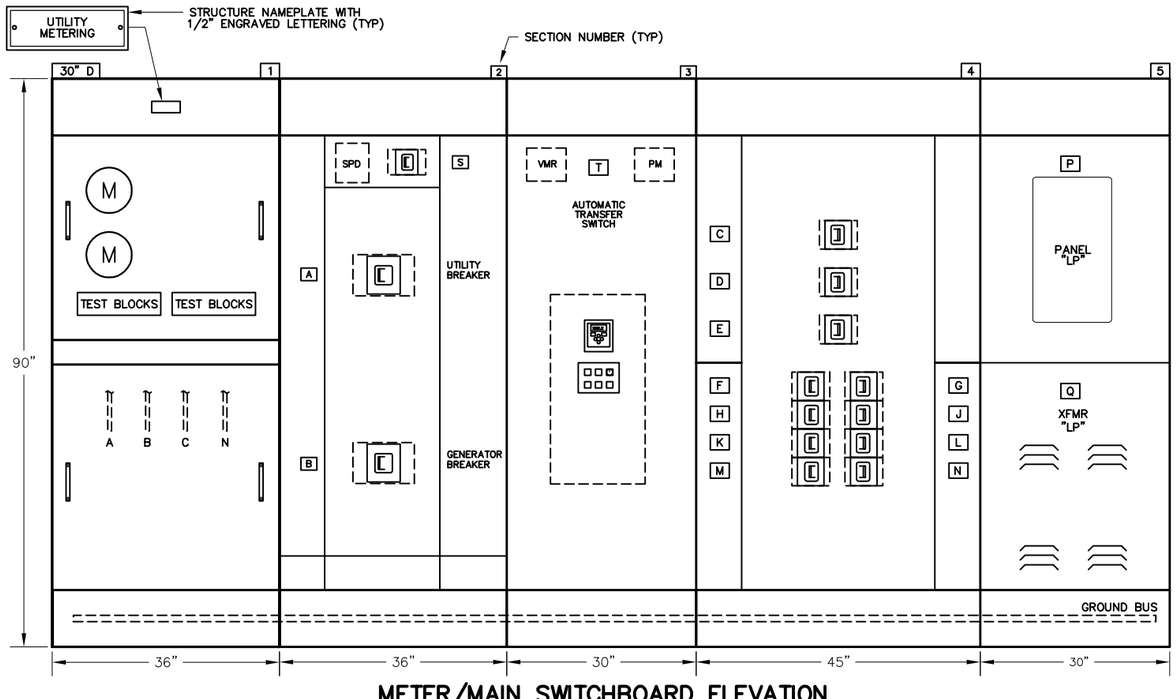

METER/MAIN SWITCHBOARD ELEVATION

NEMA 1, INDOOR

GENERAL NOTES:

1. REAR ACCESS SHALL NOT BE REQUIRED TO SERVICE OR REPLACE SWITCHBOARD COMPONENTS.
2. EACH BREAKER SHALL HAVE A PADLOCKABLE HASP TO LOCK BREAKER IN THE OFF POSITION.
3. ALL DIMENSIONS ARE APPROXIMATE. ACTUAL DIMENSIONS SHALL BE PER MANUFACTURER APPROVED IN SUBMITTAL.
4. FURNISH AND APPLY ENGRAVED WHITE LETTERING ON BLACK PLASTIC NAMEPLATES FOR DEVICES AND BREAKERS WHERE NOTED, AT MINIMUM, WITH A LETTERED BOX. TEXT HEIGHT SHALL BE 1/4 INCH MINIMUM. REFRENCE ONE-LINE DIAGRAM FOR LABEL.
5. FURNISH CODE REQURIED WARNING LABELS AND EQUIPMENT RATINGS LABELS.

NOTES:

ADD THE PREFIX 10 TO COMPLETE CONDUIT, INSTRUMENT OR EQUIPMENT TAG REFFERENCE ON THIS SHEET.

NOTES REFERENCED IN DRAWING:

(1) MOUNT PFR AND POWER MONITOR BEHIND THIS DOOR ACCESS TO DEVICES SHALL BE BEHIND DOOR.

LOAD CALCULATIONS

LOAD DESCRIPTION		CONNECTED LOAD LOAD	QTY	TOTAL	DEMAND LOAD LOAD	QTY	TOTAL	GENERATOR LOAD LOAD	QTY	TOTAL
60HP PUMP		82.00 A	3	204520.6 VA	82.00 A	2	136347.0 VA	82.00 A	2	136347.0 VA
5HP ODOR CONTROL		7.60 A	1	6318.5 VA	7.60 A	1	6318.5 VA	7.60 A	1	6318.5 VA
1HP MOTORIZED VALVE		2.10 A	2	3491.8 VA	2.10 A	1	1745.9 VA	2.10 A	1	1745.9 VA
PANELBOARD LP	120/240	31.99 A	1	26599.0 VA	25.59 A	1	21279.2 VA	25.59 A	1	21279.2 VA
TOTAL LOAD =		294.60 A	<	244929.9 VA	204.11 A	<	169690.7 VA	204.11 A	<	169690.7 VA
LOAD CORRECTION FACTORS								GENERATOR SIZE		
LARGEST MOTOR LOAD x 25%								NAMEPLATE = 250 KW 312.5 KVA		
60HP HP => 0.25 x 68173.5 VA =		20.50 A		17043.4 VA	20.50 A		17043.4 VA	@ TEMP OF 100 deg F		
80% BREAKER DERATING = TOTAL x 0.25 =		78.78 A		65493.3 VA	56.15 A		46683.5 VA	ELEVATION OF 200 FT ASL		
FOR CONTINUOUS LOADS NEC 210-20								DERATED SIZE = 244.3 KW 305.3 KVA		
SERVICE SIZE (MIN) =		393.88 A		327466.6VA	280.76 A		233417.6VA	AMPERAGE = 367 A @ 0.8 PF		
UTILITY SERVICE SIZE REQUIRED =		400 AMP						UTLIZATION % = 63 % @ 0.90 PF		
480V, 3 PHASE, 4 WIRE										

PANEL "LP"

LOCATION:MSB SECTION
ENCLOSURE:NEMA 1A
AIC RATING:10 KAIC

120/ 240 VOLTS, 1 PHASE, 3 WIRE
200 AMP BUS
200 AMP MAIN BREAKER

BKR NO.	DESCRIPTION	LOAD VA	LINE A	LINE B	AMPS/ POLE	BKR NO.	BKR NO.	AMPS/ POLE	LINE A	LINE B	LOAD VA	DESCRIPTION	BKR NO.
1	LIGHTING ELECTRICAL ROOM	336	2.8		20/1	1	2	20/1	5.0		600	CONTROL PANEL	2
3	LIGHTING OUTDOORS	304		2.5	20/1	3	4	20/1		2.5	300	CONTROL PANEL AUXILLIARY	4
5	POLE LIGHT	600	5.0		20/1	5	6	20/1	2.5		300	COMMUNICATION PANEL	6
7	RECEPTACLE ELECTRICAL ROOM	900		7.5	20/1	7	8	20/1		0.0	0	SPARE	8
9	RECEPTACLE ELECTRICAL ROOM	900	7.5		20/1	9	10	15/1	0.0		0	SPARE	10
11	RECEPTACLE OUTDOOR	1200		10.0	20/1	11	12	20/1		15.0	1800	GENERATOR BATTERY CHARGER	12
13	LIGHTING BATHROOM	84	0.7		20/1	13	14	40/2	10.0		1200	GENERATOR HEATER	14
15	RECEPTACLE BATHROOM	900		7.5	20/1	15	16			10.0	1200		16
17	BATHROOM EXHAUST FAN	1200	10.0		20/1	17	18	20/1	12.5		1500	VEHICLE GATE	18
19	SPARE	0		0.0	20/1	19	20	20/1		0.0	0	SPARE	20
21	SPARE	0	0.0		20/1	21	22	30/2	17.5		2100	HVAC OUTDOOR UNIT	22
23	BATHROOM WATER HEATER	4500		37.5	50/2	23	24			17.5	2100		24
25		4500	37.5			25	26	15/1	0.6		75	HVAC INDOOR UNIT	26
27	SPACE	0		0.0		27	28	20/1		0.0	0	SPACE	28
29	SPACE	0	0.0			29	30		0.0		0	SPACE	30
31	SPACE	0		0.0		31	32			0.0	0	SPACE	32
33	SPACE	0	0.0			33	34		0.0		0	SPACE	34
35	SPACE	0		0.0		35	36			0.0	0	SPACE	36
37	SPACE	0	0.0			37	38		0.0		0	SPACE	38
39	SPACE	0		0.0		39	40			0.0	0	SPACE	40
41	SPACE	0	0.0			41	42		0.0		0	SPACE	42

PHASE	A	B
LEFT SIDE AMPS	63.50	65.03
LEFT SIDE KVA	7.62	7.80
TOTAL PHASE KVA	13.40	13.20
TOTAL PHASE AMPS	112	110
% OF AVERAGE	101	99

NEUTRAL

GROUND

A	B	PHASE
48.13	45.00	RIGHT SIDE AMPS
5.78	5.40	RIGHT SIDE KVA
26.60		TOTAL KVA
110.83		TOTAL AMPS @ 240V, 1P
0.80		DIVERSITY FACTOR
21.28		LOAD KVA

NOTES:
1 MEANS OF WIRE COLOR CODING SHALL BE POSTED ON PANELBOARD PER NEC 210 (4)
2 ASTERISK (*) DENOTES GFI BREAKER REQUIRED WITH 5 MA SENSITIVITY
3 TILDA (~) DENOTES GFI BREAKER REQUIRED WITH 30 MA SENSITIVITY

REGISTERED PROFESSIONAL ENGINEER
THOMAS P. FRISCH
No. E15761
ELECTRICAL
STATE OF CALIFORNIA
05/27/2020

DESIGN T. FRISCH
DRAWN N. CONANT
CHECKED M. FRISCH
APPROVED M. FISHER

FRISCH ENGINEERING, INC.
CONSULTING ELECTRICAL ENGINEERS
3405 FOLSOM BLVD, UNIT 600
SACRAMENTO, CA 95816
PH 916 353 1025
WWW.FRISCHENGINEERING.COM

FILE: 10-E-01.DWG
DATE: MAY 28, 2020 TIME: 7:09:20PM

WATERWORKS ENGINEERS
2260 Douglas Blvd. Suite 150 • Roseville, CA 95661 • 916-780-2888

CITY OF MORRO BAY
WATER RECLAMATION FACILITY
LIFT STATION AND OFFSITE PIPELINES

ELECTRICAL
PUMP STATION A
METER/MAIN ONE-LINE AND ELEVATION

DATE MAY 2020
PROJECT NUMBER 17-082
DRAWING NUMBER 10-E-01
SHEET NUMBER 192

CONFORMED SET - DEC 2020

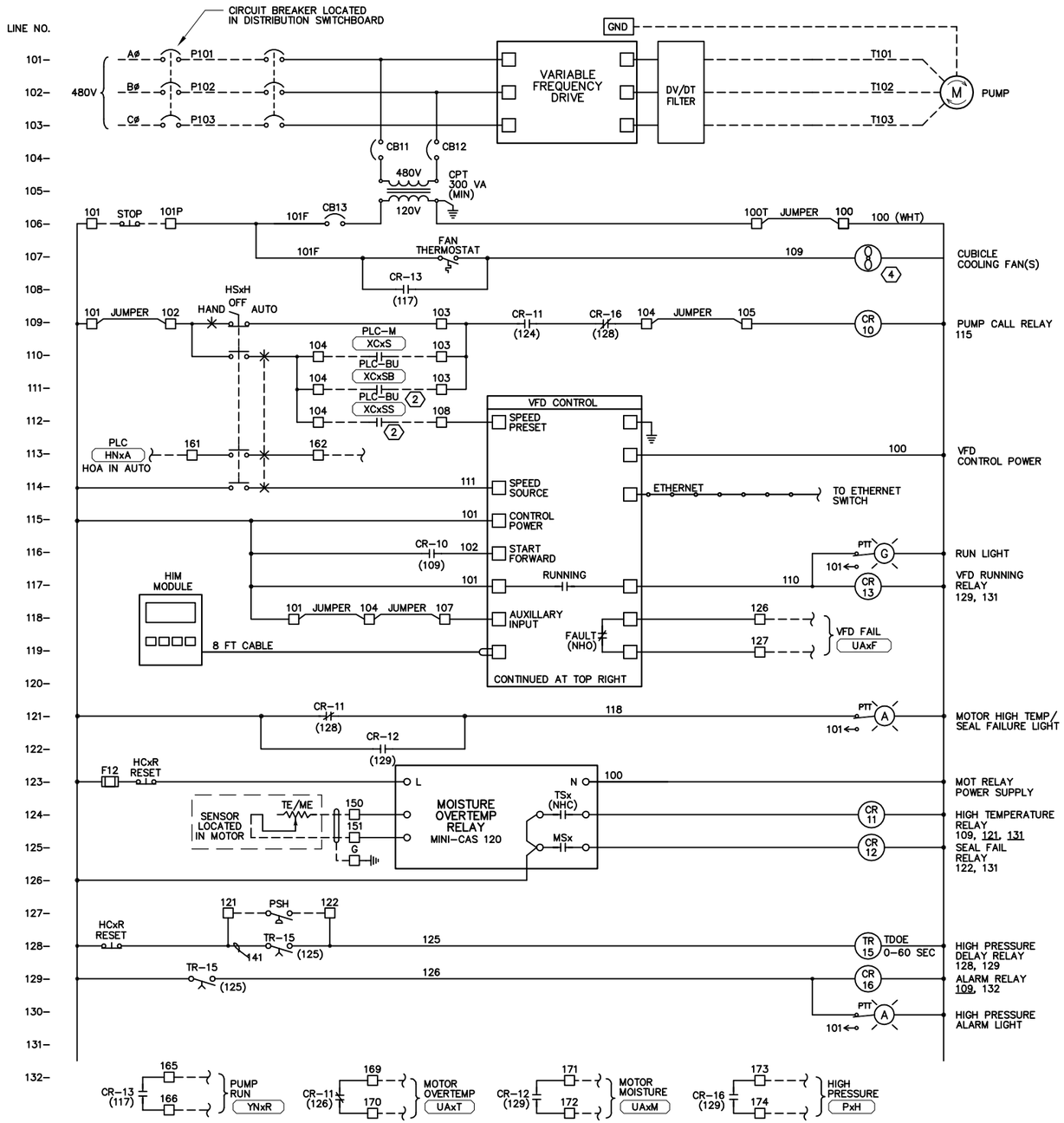

VFD ELEMENTARY DIAGRAM

P101 P201 P301

SIMILAR DIAGRAM FOR PUMPS 10, 20, 30 – SEE NOTES

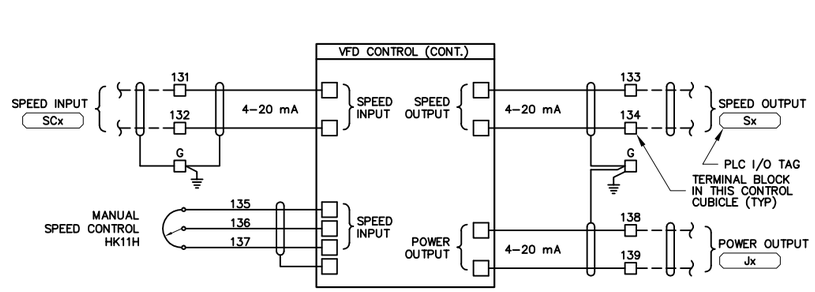

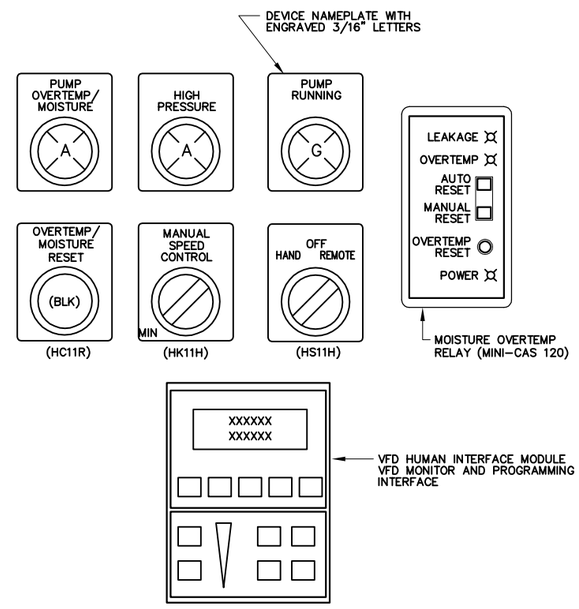

DOOR LAYOUT

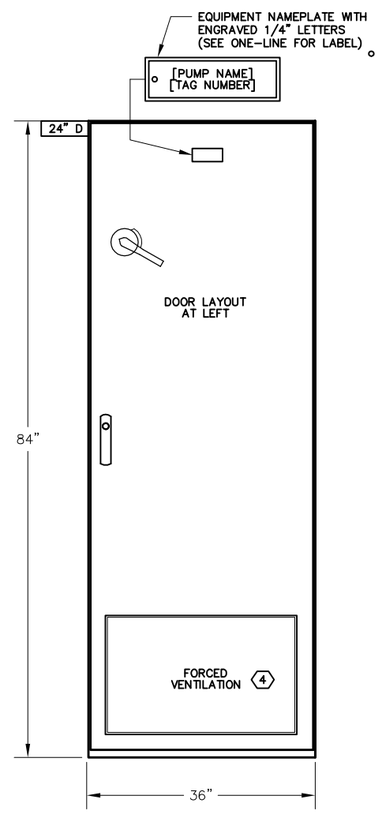

CABINET BUILT VFD PANEL ELEVATION

NOT TO SCALE

NOTES REFERENCED IN DRAWING:

1. RELAY TO BE SUPPLIED BY PUMP MANUFACTURER. INSTALL AND WIRE PER MANUFACTURER'S DRAWINGS PRIOR TO FACTORY TESTING AND DELIVERY TO JOB SITE.
2. FROM BACK-UP CONTROLS. SEE CONTROL PANEL DRAWGINS DWG 00-E-06 – 00-E-08.
3. PROVIDE VFD WITH 115 VAC CONTROL CIRCUIT INTERFACE. NO EXCEPTIONS.
4. PROVIDE COOLING FANS AS REQUIRED TO REMOVE HEAT GENERATED BY INTERNAL COMPONENTS AND MAINTAIN TEMPERATURE WITHIN DRIVE MANUFACTURER RATINGS.

GENERAL NOTES:

1. SIMILAR DIAGRAM FOR PUMP NO. 1 ~ 3.
2. TERMINAL BLOCKS AND WIRES SHALL BE LABELED SAME EXCEPTION: WIRES TO PLC SHALL BE NUMBERED PER CONTROL PANEL TERMINAL BLOCK NUMBER.

REGISTERED PROFESSIONAL ENGINEER
THOMAS P. FRISCH
No. E15761
ELECTRICAL
STATE OF CALIFORNIA

05/27/2020

DESIGN T. FRISCH
DRAWN N. CONANT
CHECKED M. FRISCH
APPROVED M. FISHER

FRISCH ENGINEERING, INC.
CONSULTING ELECTRICAL ENGINEERS
3485 FOLSOM BLVD, UNIT 600
FOLSOM, CA 95630
PH 916 353 1025
WWW.FRISCHENGINEERING.COM

FILE: 10-E-02.DWG
DATE: MAY 28, 2020 TIME: 4:11:50:2PM

WATERWORKS ENGINEERS
2260 Douglas Blvd. Suite 150 • Roseville, CA 95661 • 916-780-2888

CITY OF MORRO BAY
WATER RECLAMATION FACILITY
LIFT STATION AND OFFSITE PIPELINES

ELECTRICAL
VFD ELEMENTARY DIAGRAM

DATE MAY 2020
PROJECT NUMBER 17-082
DRAWING NUMBER 10-E-02
SHEET NUMBER 193

CONFORMED SET - DEC 2020

ELECTRICAL PLAN NOTES:

1. SEE ELECTRICAL SYMBOLS AND ABBREVIATIONS DRAWING FOR SYMBOL DEFINITION.
2. ALL WORK SHALL CONFORM TO LOCAL CODES AND NATIONAL ELECTRIC CODE.
3. SITEPLAN ACCURATE FOR ELECTRICAL WORK ONLY. COORDINATE WITH OTHER DISCIPLINES.
4. CONFIRM HOOKUP REQUIREMENTS FOR ELECTRICAL AND MECHANICAL EQUIPMENT PRIOR TO INSTALLING UNDERGROUND CONDUIT AND STUB-UPS. MISSING CONDUITS, INCORRECT SIZING, OR OTHER ISSUES MUST BE BROUGHT TO THE ATTENTION OF ENGINEER PRIOR TO BACKFILL.
5. CONDUIT ROUTING IS SHOWN GENERALLY DIAGRAMMATIC AND DOES NOT INDICATE TRENCH WIDTH OR TRENCH LAYOUT. FOR CONDUITS OUTSIDE BUILDINGS, IF CONTRACTOR WANTS TO RUN CONDUITS IN ROUTES OTHER THAN THOSE SHOWN FOR ANY REASON, THEN HE SHALL SUBMIT THE PLAN FOR APPROVAL PRIOR TO INSTALLATION. SPECIFY REASON FOR CHANGE.
6. INSTALL NON-UTILITY CONDUITS PER DRAWING DETAILS AND SPECIFICATIONS SECTION 16110.
7. CONDUITS SIZE, TYPE AND FILL DEFINED BY TAG NAME IN CONDUIT AND WIRE ROUTING SCHEDULE.
8. INSTALL UNDERGROUND NON-DUCTBANK CONDUITS PER ELECTRICAL DETAIL LVC.
9. CONDUIT TRANSITIONS SHALL BE PER EXPOSED CONDUIT TRANSITION DETAIL ECT.
10. EXPOSED CONDUIT TYPE AND FITTINGS TO BE USED ABOVE TRANSITION SHALL BE PER AREA CLASSIFICATION DEFINED IN CONDUIT SPECIFICATIONS AND EQUIPMENT SPECIFIC DETAIL.
11. REPAIR SURFACE TO PREVIOUS CONDITION FOR ALL UNDERGROUND CONDUIT ROUTES. GROUT, CAULK, AND PAINT ANY PENETRATIONS INTO STRUCTURES FOR WATERTIGHT SEAL.
12. USE SS EXPANSION WEDGE ANCHORS OR EPOXY ANCHORS AS NECESSARY FOR EQUIPMENT MOUNTING.
13. RECEPTACLES TO BE GROUND FAULT INTERRUPTER (GFI) TYPE AND WEATHERPROOF (WP) OUTDOORS AND WHERE SHOWN.
14. STUB UP CONDUITS BENEATH GENERATOR FRAME PER MANUFACTURER RECOMMENDATIONS. USE FLEXIBLE CONDUIT FOR TRANSITION BETWEEN EXPOSED CONDUIT TRANSTION AND ELECTRICAL CONNECTION BOX AND GENERATOR CONTROL PANEL.
15. UTILITY PRIMARY AND SECONDARY CONDUITS, TRANSFORMER PAD, PULL BOXES AND REMOVABLE BOLLARDS SHALL BE INSTALLED PER POWER UTILITY ENGINEERED DRAWINGS AND STANDARDS.
16. ASSUME 100 FT OF UNDERGROUND RUN BEYOND DRAWING FOR UTILITY CONNECTIONS. CONNECTION POINT SHALL BE AS DETERMINED BY UTILITY.

DRAWING REFERENCED NOTES:

1. HANG PUMP CABLES ON J-HOOKS IN WETWELL TO ALL PUMPS.
2. HVAC EQUIPMENT PER PUMP STATION A HVAC PLAN SEE DWG 10-E-04

BATHROOM
NEMA 1 AREA
ELECTRICAL ROOM
NEMA 1 AREA
NEMA 3R AREA
CONTINUED ON DWG 10-E-05
DATA CONNECTION FOR SCADA TERMINAL
VFD CONTROL PANEL PER DWG 10-E-02 INSTALL PER DWG 00-E-02/ECP (TYP)
METER/MAIN SWITCHBOARD PER DWG 10-E-01 INSTALL PER DWG 00-E-02/ECP
INSTRUMENT TERMINATION PANEL PER DWG 00-E-05/ITP
PUMP 1 VFD
PUMP 2 VFD
PUMP 3 VFD
SUMP TERMINATION PANEL PER DWG 00-E-05/PTP
HANG INSTRUMENTS IN WETWELL PER DWG 00-E-06/WWE
PUMP STATION CONTROL PANEL PER DWG 00-E-02 - 00-E-04 INSTALL PER DWG 00-E-02/ECP
COMMUNICATION PANEL PER DWG 00-E-04/CP
NEMA 3R AREA BEYOND 10 FT WETWELL RADIUS
CL 1 DIV 1 AREA 10 FT RADIUS OF WETWELL HATCH
LEVEL SWITCHES PER DWG 00-E-03/FLTS
LEVEL TRANSMITTER PER DWG 00-E-03/ULT (TYP)
PUMP 1 P-101
PUMP 2 P-201
PUMP 3 P-301
MV-106
MV-107
FLOWMETER INSTALL PER DWG 00-E-03/FM
PRESSURE TRANSMITTER INSTALL PER DWG 00-E-03/PT
PRESSURE SWITCH (TYP)
AREA POLE LIGHT PER DWG 00-E-04/AL
CONTINUED ON DWG 10-E-05

PUMP STATION A POWER AND CONTROL PLAN

SCALE: 1/2" = 1'

0 2 4 (Approximate Scale in Feet)

NOTES:

ADD THE PREFIX 10 TO COMPLETE INSTRUMENT OR EQUIPMENT TAG REFFERENCE ON THIS SHEET.
EXAMPLE: P-10101 FOR PUMP 1

REGISTERED PROFESSIONAL ENGINEER
THOMAS P. FRISCH
No. E15761
ELECTRICAL
STATE OF CALIFORNIA
05/27/2020

DESIGN T. FRISCH
DRAWN N. CONANT
CHECKED M. FRISCH
APPROVED M. FISHER

FRISCH ENGINEERING, INC.
CONSULTING ELECTRICAL ENGINEERS
3485 FOLSOM BLVD, UNIT 600
FOLSOM, CA 95630
PH 916 353 1025
WWW.FRISCHENGINEERING.COM

FILE: 10-E-03.DWG
DATE: MAY 29, 2020 TIME: 2:11 8:10PM

WATERWORKS ENGINEERS
2260 Douglas Blvd, Suite 150 • Roseville, CA 95661 • 916-780-2888

CITY OF MORRO BAY
WATER RECLAMATION FACILITY
LIFT STATION AND OFFSITE PIPELINES

ELECTRICAL
PUMP STATION A
POWER AND CONTROL PLAN

DATE MAY 2020
PROJECT NUMBER 17-082
DRAWING NUMBER 10-E-03
SHEET NUMBER 194

CONFORMED SET - DEC 2020

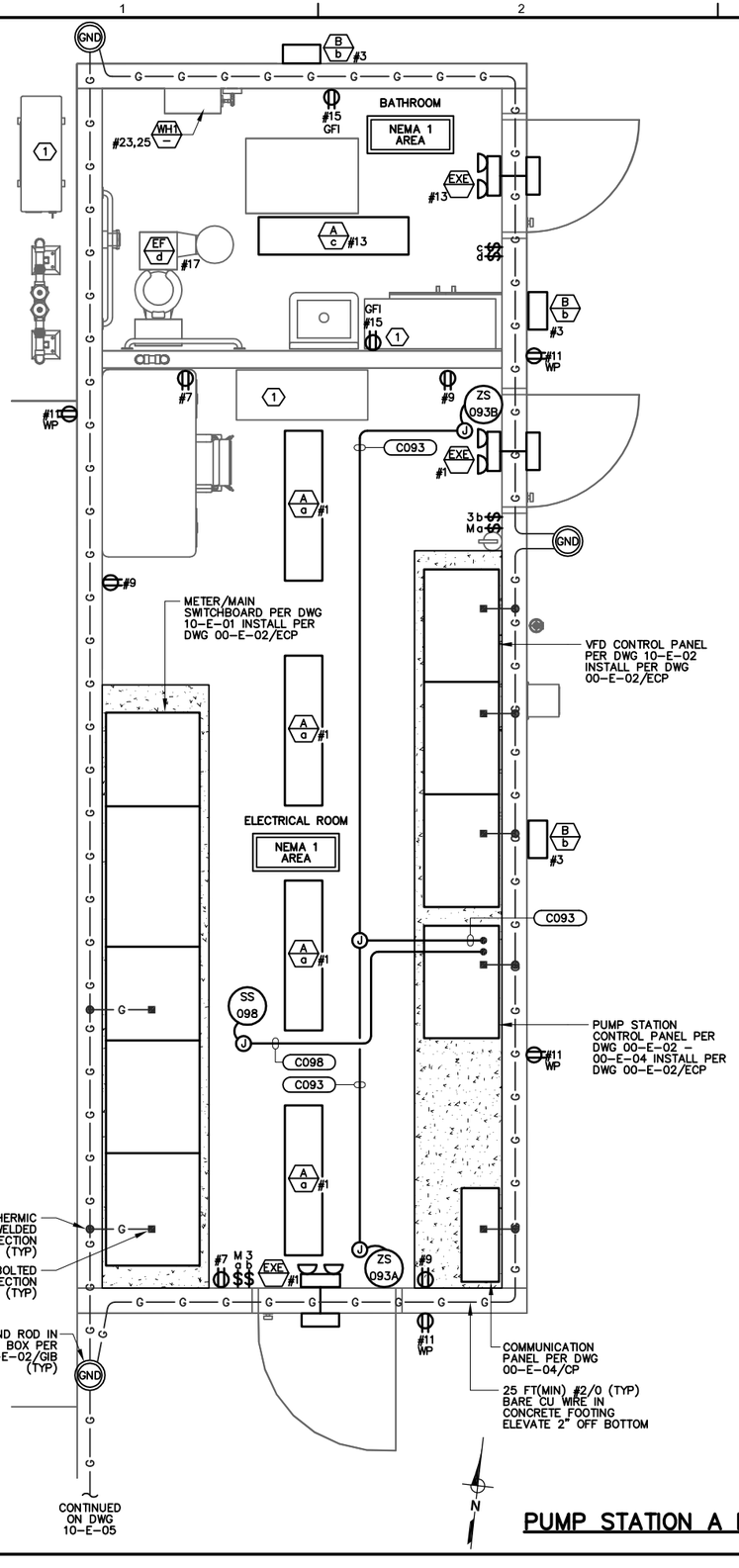

PUMP STATION A LIGHTING AND RECEPTACLE PLAN

SCALE: 1/2" = 1'

0 2 4 (Approximate Scale in Feet)

FIXTURE SCHEDULE						
CODE LETTER	FIXTURE TYPE	FIXTURE LAMPS	WATTS/ FIXTURE	MANUFACTURER OR APPROVED EQUAL	MOUNTING ARRANGEMENT	NOTES
A	STRIP LUMINAIRE, 4 FT, VAPORTIGHT MOLDED POLYCARBONATE HOUSING FROSTED LENS, MEDIUM DISTRIBUTION	6000 LUMEN 4500K	120V 50W	ATLAS ILW48LED4D RAB SEAL4-50/D10	CEILING MOUNT FIXTURE	U.L. LISTED -20F TO 140F
B	WALL PACK LIGHT - MEDIUM DARK BRONZE COLOR ALUMINUM CASE	7000 LUMEN 4000K	120V 64W	ATLAS WPM64LED RAB WPLEDFC80N/PCS	WALL MOUNT 15 FT AFF	U.L. LISTED FOR WET LOCATIONS PHOTOCELL CONTROL FULL CUTOFF
EXE	EXIT LIGHT PACK WITH EGRESS LAMPS AND REMOTE OUTDOOR EGRESS FIXTURE LED LAMPS WITH RED LED SIGN INTEGRAL BATTERY AND CHARGER	2 LED 3W	120V 5W	DUAL-LITE HCX-U-R-W-03L-RC12 CPRSB0603L	WALL MOUNT 9 FT AFF	WHITE INTERIOR, BROWN EXTERIOR DUAL LED LAMPS INDOORS AND OUT 12W REMOTE LIGHT CAPACITY
WH1	TANKLESS WATER HEATER WALL MOUNT ENCLOSURE 3/4" COPPER PIPE INLET/OUTLET	9.5 KW 40A 240VAC, 1PH	9.5 KW	PER CIVIL SPECIFICATIONS	WALL MOUNT NEXT TO SINK	
EF	EXHAUST FAN		120 VAC	SEE MECHANICAL		
IDU	INDOOR HVAC UNIT		120 VAC	SEE MECHANICAL		
ODU	OUTDOOR HVAC UNIT		240 VAC	SEE MECHANICAL		PROVIDE DISCONNECT
RDU	REFRIGERANT DISTRIBUITON UNIT		120 VAC	SEE MECHANICAL		

DRAWING REFERENCED NOTES:

1. HVAC EQUIPMENT PER PUMP STATION A HVAC PLAN SEE RIGHT

GENERAL NOTES THAT APPLY TO LIGHTING AND RECEPTACLE PLAN.

1. THESE NOTES SHALL APPLY TO ALL EQUIPMENT OR FIXTURES WITH ELECTRICAL CONNECTIONS BUT WITHOUT CONDUITS SHOWN, CONDUIT NUMBERS, OR NOT LISTED IN SCHEDULE.
2. PROVIDE AND INSTALL NECESSARY WIRES IN SURFACE MOUNT 3/4" (MINIMUM) CONDUIT FOR FOR ELECTRICAL FIXTURE ARRANGEMENT AS SHOWN. MAXIMUM 3 CIRCUITS PER CONDUIT SECTION OVER 24" IN LENGTH. CONDUITS SHALL NOT EXCEED 40% FILL.
3. CONDUITS UNDER SLAB SHALL BE PVC-40 WITH STUB-OUTS PER EXPOSED CONDUIT TRANSITION DETAIL.
4. CONDUITS ABOVE CEILING SHALL BE EMT WITH COMPRESSION STYLE FITTINGS. CONDUITS BELOW CEILING SHALL BE GRS. ACCESS TO ATTIC AREA SHALL NOT BE REQUIRED TO INSTALL CONDUCTORS.
5. DEVICE BOXES AND CONDUIT BODIES SHALL BE CAST IRON OR ALUMINUM WITH THREADED HUB.
6. CONDUCTORS SHALL BE COPPER TYPE THHN, CLASS C STRANDING, #12 AWG (MINIMUM). SIZED PER NEC BY CIRCUIT AMPACITY.
7. MOUNT CONDUITS USING SINGLE BOLT GALVANIZED PIPE STRAPS AND CLAMP BACK SPACERS.
8. USE SS EXPANSION WEDGE ANCHORS OR EPOXY ANCHORS AS NECESSARY FOR EQUIPMENT MOUNTING.
9. EXPOSED CONDUIT SHALL BE PAINTED WITH WALL AND/OR CEILING AS SPECIFIED.
10. PROVIDE AND INSTALL FIXTURES PER SCHEDULE THIS PAGE, QUANTITY AS SHOWN IN DRAWINGS.
11. PROVIDE AND INSTALL ALL DEVICE BOXES, JUNCTION BOXES, RECEPTACLES, SWITCHES, AND COVERS MOUNT ALL RECEPTACLES AT 48" AFF UNLESS OTHERWISE NOTED.
12. RECEPTACLES TO BE GROUND FAULT INTERRUPTER (GFI) TYPE AND WEATHERPROOF (WP) WHERE SHOWN.
13. SEE ELECTRICAL SYMBOLS AND ABBREVIATIONS DRAWING FOR SYMBOL DEFINITION.
14. ALL WORK SHALL CONFORM TO LOCAL CODES AND NATIONAL ELECTRIC CODE.
15. SWITCH TYPE: T= TIME SWITCH, M= MOTION DETECTOR, 3= 3-WAY.

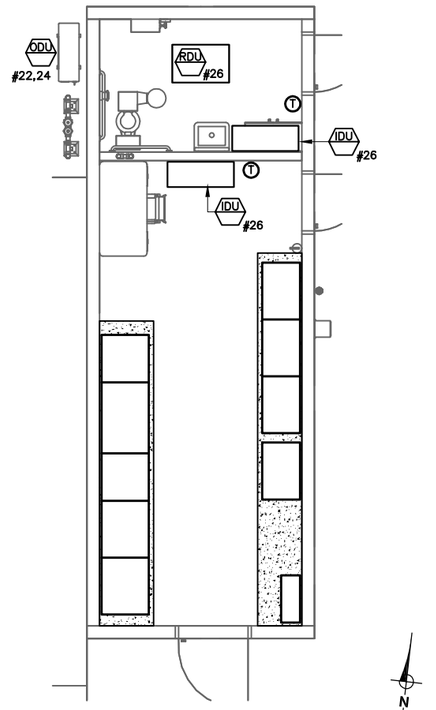

PUMP STATION A HVAC PLAN

SCALE: 1/4" = 1'

0 4 8 (Approximate Scale in Feet)

NOTES:

ADD THE PREFIX 10 TO COMPLETE INSTRUMENT OR EQUIPMENT TAG REFFERENCE ON THIS SHEET. EXAMPLE: P-10101 FOR PUMP 1

REGISTERED PROFESSIONAL ENGINEER THOMAS P. FRISCH No. E15761 ELECTRICAL STATE OF CALIFORNIA

05/27/2020

DESIGN T. FRISCH
DRAWN N. CONANT
CHECKED M. FRISCH
APPROVED M. FISHER

FRISCH ENGINEERING, INC.
CONSULTING ELECTRICAL ENGINEERS
3485 FOLSOM BLVD, UNIT 600
RENO, NV 89502
PH 916 353 1025
WWW.FRISCHENGINEERING.COM

FILE: 10-E-04.DWG
DATE: MAY 29, 2020 TIME: 2:03:41 PM

WATERWORKS ENGINEERS
2260 Douglas Blvd, Suite 150 • Roseville, CA 95661 • 916-780-2888

CITY OF MORRO BAY
WATER RECLAMATION FACILITY
LIFT STATION AND OFFSITE PIPELINES

ELECTRICAL
PUMP STATION A
LIGHTING AND RECEPTACLE PLAN

DATE MAY 2020
PROJECT NUMBER 17-082
DRAWING NUMBER 10-E-04
SHEET NUMBER 195

CONFORMED SET - DEC 2020

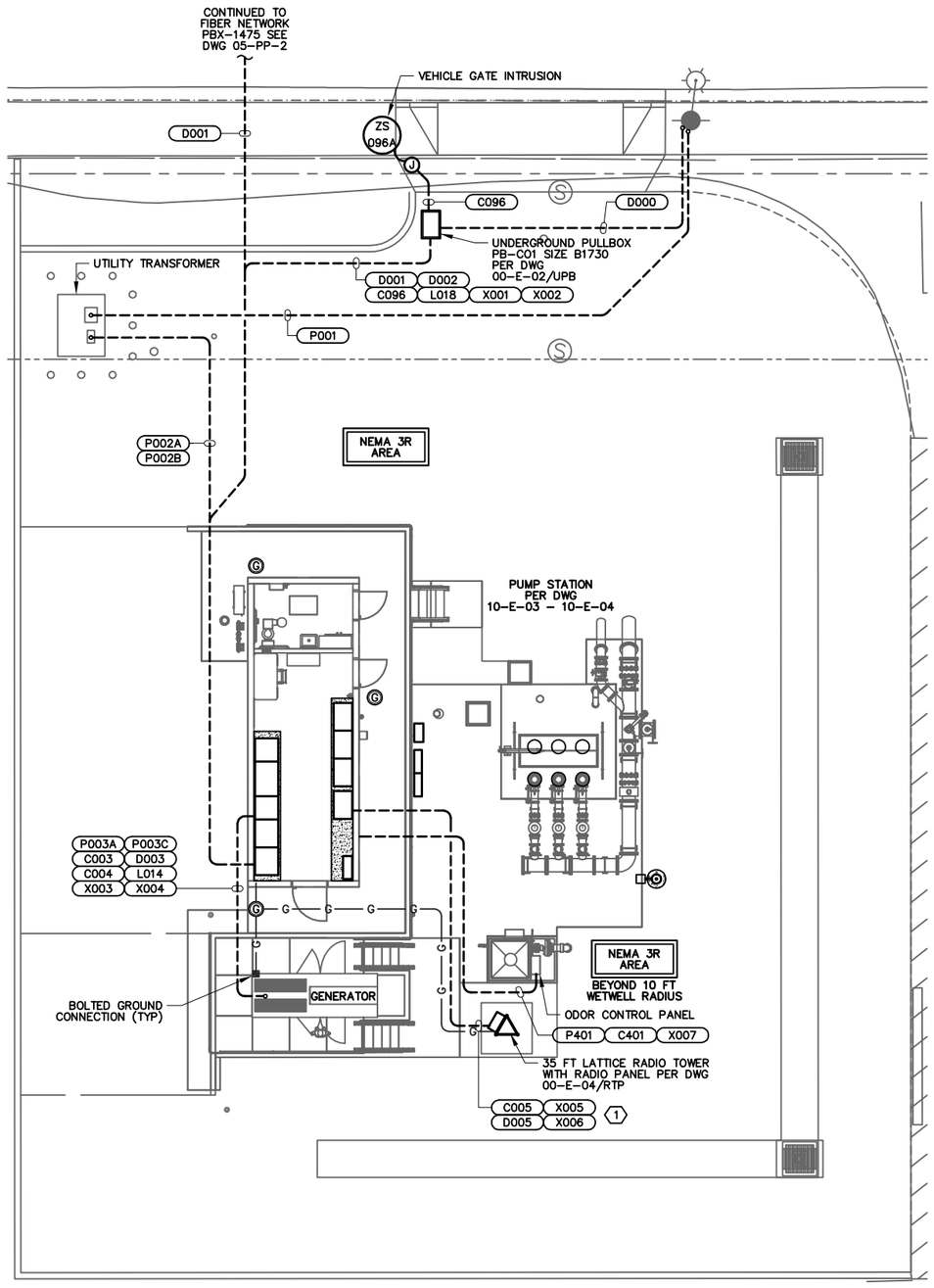

PUMP STATION A ELECTRICAL SITE PLAN

SCALE: 1/8" = 1'

0 8 16
(Approximate Scale In Feet)

ELECTRICAL PLAN NOTES:

1. SEE ELECTRICAL SYMBOLS AND ABBREVIATIONS DRAWING FOR SYMBOL DEFINITION.
2. ALL WORK SHALL CONFORM TO LOCAL CODES AND NATIONAL ELECTRIC CODE.
3. SITEPLAN ACCURATE FOR ELECTRICAL WORK ONLY. COORDINATE WITH OTHER DISCIPLINES.
4. CONFIRM HOOKUP REQUIREMENTS FOR ELECTRICAL AND MECHANICAL EQUIPMENT PRIOR TO INSTALLING UNDERGROUND CONDUIT AND STUB-UPS. MISSING CONDUITS, INCORRECT SIZING, OR OTHER ISSUES MUST BE BROUGHT TO THE ATTENTION OF ENGINEER PRIOR TO BACKFILL.
5. CONDUIT ROUTING IS SHOWN GENERALLY DIAGRAMMATIC AND DOES NOT INDICATE TRENCH WIDTH OR TRENCH LAYOUT. FOR CONDUITS OUTSIDE BUILDINGS, IF CONTRACTOR WANTS TO RUN CONDUITS IN ROUTES OTHER THAN THOSE SHOWN FOR ANY REASON, THEN HE SHALL SUBMIT THE PLAN FOR APPROVAL PRIOR TO INSTALLATION. SPECIFY REASON FOR CHANGE.
6. INSTALL NON-UTILITY CONDUITS PER DRAWING DETAILS AND SPECIFICATIONS SECTION 16110.
7. CONDUITS SIZE, TYPE AND FILL DEFINED BY TAG NAME IN CONDUIT AND WIRE ROUTING SCHEDULE.
8. INSTALL UNDERGROUND NON-DUCTBANK CONDUITS PER ELECTRICAL DETAIL LVC.
9. CONDUIT TRANSITIONS SHALL BE PER EXPOSED CONDUIT TRANSITION DETAIL ECT.
10. EXPOSED CONDUIT TYPE AND FITTINGS TO BE USED ABOVE TRANSITION SHALL BE PER AREA CLASSIFICATION DEFINED IN CONDUIT SPECIFICATIONS AND EQUIPMENT SPECIFIC DETAIL.
11. REPAIR SURFACE TO PREVIOUS CONDITION FOR ALL UNDERGROUND CONDUIT ROUTES. GROUT, CAULK, AND PAINT ANY PENETRATIONS INTO STRUCTURES FOR WATERTIGHT SEAL.
12. USE SS EXPANSION WEDGE ANCHORS OR EPOXY ANCHORS AS NECESSARY FOR EQUIPMENT MOUNTING.
13. RECEPTACLES TO BE GROUND FAULT INTERRUPTER (GFI) TYPE AND WEATHERPROOF (WP) OUTDOORS AND WHERE SHOWN.
14. STUB UP CONDUITS BENEATH GENERATOR FRAME PER MANUFACTURER RECOMMENDATIONS. USE FLEXIBLE CONDUIT FOR TRANSITION BETWEEN EXPOSED CONDUIT TRANSTION AND ELECTRICAL CONNECTION BOX AND GENERATOR CONTROL PANEL.
15. UTILITY PRIMARY AND SECONDARY CONDUITS, TRANSFORMER PAD, PULL BOXES AND REMOVABLE BOLLARDS SHALL BE INSTALLED PER POWER UTILITY ENGINEERED DRAWINGS AND STANDARDS.
16. ASSUME 100 FT OF UNDERGROUND RUN BEYOND DRAWING FOR UTILITY CONNECTIONS. CONNECTION POINT SHALL BE AS DETERMINED BY UTILITY.

DRAWING REFERENCED NOTES:

1. PROVIDE 45° CONDUIT SWEEPS TO RADIO TOWER.

NOTES:

ADD THE PREFIX 10 TO COMPLETE INSTRUMENT OR EQUIPMENT TAG REFFERENCE ON THIS SHEET.
EXAMPLE: P-10101 FOR PUMP 1

REGISTERED PROFESSIONAL ENGINEER
THOMAS P. FRISCH
No. E15761
ELECTRICAL
STATE OF CALIFORNIA
05/27/2020

DESIGN T. FRISCH
DRAWN N. CONANT
CHECKED M. FRISCH
APPROVED M. FISHER

FRISCH ENGINEERING, INC.
CONSULTING ELECTRICAL ENGINEERS
3405 FOLSOM BLVD, UNIT 600
SACRAMENTO, CA 95816
PH 916 353 1025
WWW.FRISCHENGINEERING.COM

FILE: 10-E-05.DGN
DATE: MAY 28, 2020 TIME: 11:04:35AM

WATERWORKS ENGINEERS
2260 Douglas Blvd. Suite 150 • Roseville, CA 95661 • 916-780-2888

CITY OF MORRO BAY
WATER RECLAMATION FACILITY
LIFT STATON AND OFFSITE PIPELINES

ELECTRICAL
PUMP STATION A
ELECTRICAL SITE PLAN

DATE MAY 2020
PROJECT NUMBER 17-082
DRAWING NUMBER 10-E-05
SHEET NUMBER 196

CONFORMED SET - DEC 2020

CONDUIT & WIRE ROUTING SCHEDULE

REV	CONDUIT DETAILS TAG NO.	FROM	TO	QTY	SIZE	TYPE	POWER WIRE QTY	POWER WIRE SIZE	CONTROL WIRE QTY	CONTROL WIRE SIZE	GROUND SIZE	NOTES
	A002	CONTROL PANEL	SWITCHBOARD	1	3/4"	SPEC	–	–	–	–	–	PULL ROPE
	A011	CONTROL PANEL	PUMP 1 VFD	1	1-1/2"	SPEC	–	–	3	#18 TSPR	#14	
	A021	CONTROL PANEL	PUMP 2 VFD	1	1-1/2"	SPEC	–	–	3	#18 TSPR	#14	
	A031	CONTROL PANEL	PUMP 3 VFD	1	1-1/2"	SPEC	–	–	3	#18 TSPR	#14	
	A051A	CONTROL PANEL	INSTRUMENT JUNCTION BOX	1	3/4"	SPEC	–	–	1	#18 TSPR	#14	
	A051B	INSTRUMENT JUNCTION BOX	LEVEL TRANSMITTER LT-051	1	1"	SPEC	–	–	1	MFG CABLE	–	
	A053A	CONTROL PANEL	INSTRUMENT JUNCTION BOX	1	3/4"	SPEC	–	–	1	#18 TSPR	#14	
	A053B	INSTRUMENT JUNCTION BOX	BACK-UP LEVEL TRANSMITTER LT-053	1	1"	SPEC	–	–	1	MFG CABLE	–	
	A061	CONTROL PANEL	PRESSURE TRANSMITTER PIT-061	1	3/4"	SPEC	–	–	1	#18 TSPR	#14	
	A071	CONTROL PANEL	FLOWMETER FIT-071	1	3/4"	SPEC	–	–	1	#18 TSPR	#14	
	A082	CONTROL PANEL	BUILDING TEMP TIT-082	1	3/4"	SPEC	–	–	1	#18 TSPR	#14	
	C002	CONTROL PANEL	SWITCHBOARD	1	1"	SPEC	–	–	12	#14	#14	
	C003	CONTROL PANEL	GENERATOR	1	1"	SPEC	–	–	6	#14	#14	
	C004	ATS	GENERATOR	1	3/4"	SPEC	–	–	4	#14	#14	
	C005	CONTROL PANEL	RADIO ANTENNA POLE	1	3/4"	SPEC	2	#12	–	–	#12	
	C006	CONTROL PANEL	COMMUNICATION PANEL	1	1"	SPEC	–	–	4	#14	#12	
	C011	CONTROL PANEL	PUMP 1 VFD	1	1-1/2"	SPEC	–	–	20	#14	#14	
	C021	CONTROL PANEL	PUMP 2 VFD	1	1-1/2"	SPEC	–	–	20	#14	#14	
	C031	CONTROL PANEL	PUMP 3 VFD	1	1-1/2"	SPEC	–	–	20	#14	#14	
	C051	CONTROL PANEL	INSTRUMENT JUNCTION BOX	1	3/4"	SPEC	–	–	4	#14	#12	
	C052A	CONTROL PANEL	INSTRUMENT JUNCTION BOX	1	3/4"	SPEC	–	–	6	#14	#14	
	C052B	INSTRUMENT JUNCTION BOX	LEVEL SWITCHES LSH-052, LSL-052	1	1"	SPEC	–	–	4	#14	#14	
	C071	CONTROL PANEL	FLOWMETER FIT-071	1	3/4"	SPEC	–	–	2	#14	#10	
	C093	CONTROL PANEL	BUILDING INTRUSION ZS-093A, ZS-093B	1	3/4"	SPEC	–	–	4	#14	#14	
	C096	VEHICLE GATE INTRUSION	CONTROL PANEL	1	3/4"	SPEC	–	–	2	#14	#14	VIA PB-C01
	C098	CONTROL PANEL	SMOKE ALARM	1	3/4"	SPEC	–	–	4	#14	#14	
	C101	PUMP 1 VFD	SUMP TERMINATION PANEL	1	3/4"	SPEC	–	–	1	#18 TSPR	#14	
	C106	CONTROL PANEL	MV-106	1	1"	SPEC	–	–	10	#14	#14	
	C107	CONTROL PANEL	MV-107	1	1"	SPEC	–	–	10	#14	#14	
	C161	PUMP 1 VFD	PUMP 1 HIGH PRESSURE PSH-161	1	3/4"	SPEC	–	–	2	#14	#14	
	C162	PUMP 2 VFD	PUMP 2 HIGH PRESSURE PSH-162	1	3/4"	SPEC	–	–	2	#14	#14	
	C163	PUMP 3 VFD	PUMP 3 HIGH PRESSURE PSH-163	1	3/4"	SPEC	–	–	2	#14	#14	
	C201	PUMP 2 VFD	SUMP TERMINATION PANEL	1	3/4"	SPEC	–	–	1	#18 TSPR	#14	
	C301	PUMP 3 VFD	SUMP TERMINATION PANEL	1	3/4"	SPEC	–	–	1	#18 TSPR	#14	
	C401	CONTROL PANEL	ODOR CONTROL PANEL	1	1"	SPEC	–	–	6	#14	#14	
	D000	TEL-CO UTILITY	PB-C01	1	2"	SPEC	–	–	–	–	–	PULL ROPE
	D001	FIBER NETWORK	COMMUNICATION PANEL	1	4"	SPEC	–	–	2	FO CABLE	–	
	D002	PB-C01	COMMUNICATION PANEL	1	3/4"	SPEC	–	–	–	–	–	PULL ROPE
	D003	CONTROL PANEL	GENERATOR	1	3/4"	SPEC	–	–	–	–	–	PULL ROPE
	D004	CONTROL PANEL	SWITCHBOARD	1	3/4"	SPEC	–	–	1	CAT 6	–	BELDEN 7919A
	D005	CONTROL PANEL	RADIO ANTENNA POLE	1	2"	SPEC	–	–	1	ANTENNA CABLE	–	GRS ABOVE GRADE
	D006	COMMUNICATION PANEL	CONTROL PANEL	1	3/4"	SPEC	–	–	4	CAT 6	#14	
	D007	COMMUNICATION PANEL	CONTROL PANEL	1	1"	SPEC	–	–	1	FO CABLE	–	PATCH CORD
	D010	COMMUNICATION PANEL	SCADA TERMINAL	1	3/4"	SPEC	–	–	2	CAT 6	#14	
	D011	CONTROL PANEL	PUMP 1 VFD	1	3/4"	SPEC	–	–	2	CAT 6	#14	
	D021	CONTROL PANEL	PUMP 2 VFD	1	3/4"	SPEC	–	–	2	CAT 6	#14	
	D031	CONTROL PANEL	PUMP 3 VFD	1	3/4"	SPEC	–	–	2	CAT 6	#14	

NOTES PERTAINING TO CONDUIT SCHEDULE:

1. CONDUIT TYPE "SPEC" IS AS DEFINED IN SPECIFICATIONS SECTION 16110 FOR NON-EXPOSED AND EXPOSED PORTIONS OF CONDUIT RUN.
2. SEE SPECIFICATIONS AND EXPOSED TRANSITION DETAIL OR EQUIPMENT SPECIFIC DETAIL FOR CONDUIT TRANSITION MATERIALS AND METHODS FROM BELOW GROUND TO EXPOSED PORTIONS OF RUN.
3. CONDUITS OVER 15 FT LENGTH (EITHER EMPTY OR WITH CONDUCTORS SIZED LESS THAN #8 AWG), SHALL INCLUDE A POLY PULL STRING. STRING SHALL BE TIED OFF AT EACH END.
4. FITTINGS, CONDULETS, BOXES AND COVERS SHALL MATCH DUTY OF ADJACENT PIPE, SEE SPECIFICATIONS 16110.
5. WIRE SIZING IN TABLE IS BASED ON COPPER CONDUCTORS, THHN INSULATION, WITH TYPE C STRANDING. OTHER CONDUCTOR TYPES, IF ALLOWED OR REQUIRED PER SPECIFICATION, MAY REQUIRE CONDUITS TO BE UPSIZED BY CONTRACTOR AND SUBMITTED FOR APPROVAL.
6. SEE GENERAL NOTES ON LIGHTING AND RECEPTACLE PLAN FOR CONDUIT REQUIREMENTS FOR ELECTRICAL DEVICES WITHOUT CONDUITS SHOWN, CONDUIT NUMBERS, OR NOT LISTED IN SCHEDULE.

REGISTERED PROFESSIONAL ENGINEER
THOMAS P. FRISCH
No. E15761
ELECTRICAL
STATE OF CALIFORNIA
05/27/2020

DESIGN T. FRISCH
DRAWN N. CONANT
CHECKED M. FRISCH
APPROVED M. FISHER

FRISCH ENGINEERING, INC.
CONSULTING ELECTRICAL ENGINEERS
3405 FOLSOM BLVD, UNIT 600
SACRAMENTO, CA 95816
PH 916 353 1025
WWW.FRISCHENGINEERING.COM
FILE: 16-15 SHEET 05.DGN
DATE: MAY 28, 2020 TIME: 4:34:18PM

WATERWORKS ENGINEERS
2260 Douglas Blvd. Suite 150 • Roseville, CA 95661 • 916-780-2888

CITY OF MORRO BAY
WATER RECLAMATION FACILITY
LIFT STATON AND OFFSITE PIPELINES

ELECTRICAL
PUMP STATION A
CONDUIT SCHEDULE 1

DATE MAY 2020
PROJECT NUMBER 17-082
DRAWING NUMBER 10-E-06
SHEET NUMBER 197

CONFORMED SET - DEC 2020

CONDUIT & WIRE ROUTING SCHEDULE

REV	CONDUIT DETAILS TAG NO.	FROM	TO	QTY	SIZE	TYPE	POWER WIRE QTY	POWER WIRE SIZE	CONTROL WIRE QTY	CONTROL WIRE SIZE	GROUND SIZE	NOTES
	L002	PANEL LP	CONTROL PANEL	1	3/4"	SPEC	4	#12	–	–	#12	
	L005	PANEL LP	AREA POLE LIGHT	1	3/4"	SPEC	2	#12	–	–	#12	
	L006	PANEL LP	COMMUNICATION PANEL	1	3/4"	SPEC	2	#12	–	–	#12	
	L014	PANEL LP	GENERATOR	1	1"	SPEC	6	#12	–	–	#12	
	L018	PANEL LP	PB–C01	1	3/4"	SPEC	2	#12	–	–	#12	
	P001	UTILITY POLE	UTILITY TRANSFORMER	1	4"	SPEC	–	–	–	–	–	PER UTILITY REQUIREMENTS
	P002A,B	UTILITY TRANSFORMER	METER/MAIN	2	5"	SPEC	–	–	–	–	–	PER UTILITY REQUIREMENTS
	P003A,B	GENERATOR	ATS	2	4"	SPEC	3	#350	–	–	#0	
	P011	SWITCHBOARD	PUMP 1 VFD	1	1–1/2"	SPEC	3	#2	–	–	#6	
	P021	SWITCHBOARD	PUMP 2 VFD	1	1–1/2"	SPEC	3	#2	–	–	#6	
	P031	SWITCHBOARD	PUMP 3 VFD	1	1–1/2"	SPEC	3	#2	–	–	#6	
	P101	PUMP 1 VFD	SUMP TERMINATION PANEL	1	3"	SPEC	3	#2	–	–	#6	VFD CABLE
	P102	SUMP TERMINATION PANEL	PUMP 1	1	4"	SPEC	1	MFG CABLE	–	–	#6	
	P106	SWITCHBOARD	MV–106	1	1"	SPEC	3	#12	–	–	#12	
	P107	SWITCHBOARD	MV–107	1	1"	SPEC	3	#12	–	–	#12	
	P201	PUMP 2 VFD	SUMP TERMINATION PANEL	1	3"	SPEC	3	#2	–	–	#6	VFD CABLE
	P202	SUMP TERMINATION PANEL	PUMP 2	1	4"	SPEC	1	MFG CABLE	–	–	#6	
	P301	PUMP 3 VFD	SUMP TERMINATION PANEL	1	3"	SPEC	3	#2	–	–	#6	VFD CABLE
	P302	SUMP TERMINATION PANEL	PUMP 3	1	4"	SPEC	1	MFG CABLE	–	–	#6	
	P401	ODOR CONTROL STARTER	ODOR CONTROL PANEL	1	1"	SPEC	3	#12	–	–	#12	
	X001	CONTROL PANEL	PB–C01	1	1"	SPEC	–	–	–	–	–	PULL ROPE
	X002	PANEL LP	PB–C01	1	1"	SPEC	–	–	–	–	–	PULL ROPE
	X003	CONTROL PANEL	GENERATOR	1	1"	SPEC	–	–	–	–	–	PULL ROPE
	X004	PANEL LP	GENERATOR	1	1"	SPEC	–	–	–	–	–	PULL ROPE
	X005	CONTROL PANEL	RADIO ANTENNA POLE	1	2"	SPEC	–	–	–	–	–	PULL ROPE
	X006	PANEL LP	RADIO ANTENNA POLE	1	1"	SPEC	–	–	–	–	–	PULL ROPE
	X007	ODOR CONTROL STARTER	ODOR CONTROL SYSTEM	1	1"	SPEC	–	–	–	–	–	PULL ROPE
	X011	CONTROL PANEL	PUMP 1 VFD	1	1"	SPEC	–	–	–	–	–	PULL ROPE
	X012	SWITCHBOARD	PUMP 1 VFD	1	1"	SPEC	–	–	–	–	–	PULL ROPE
	X021	CONTROL PANEL	PUMP 2 VFD	1	1"	SPEC	–	–	–	–	–	PULL ROPE
	X022	SWITCHBOARD	PUMP 2 VFD	1	1"	SPEC	–	–	–	–	–	PULL ROPE
	X031	CONTROL PANEL	PUMP 3 VFD	1	1"	SPEC	–	–	–	–	–	PULL ROPE
	X032	SWITCHBOARD	PUMP 3 VFD	1	1"	SPEC	–	–	–	–	–	PULL ROPE
	X052	CONTROL PANEL	INSTRUMENT JUNCTION BOX	1	1"	SPEC	–	–	–	–	–	PULL ROPE
	X053	INSTRUMENT JUNCTION BOX	WETWELL	1	1"	SPEC	–	–	–	–	–	PULL ROPE
	X101	PUMP 1 VFD	SUMP TERMINATION PANEL	1	1"	SPEC	–	–	–	–	–	PULL ROPE
	X102	SUMP TERMINATION PANEL	WETWELL	1	1"	SPEC	–	–	–	–	–	PULL ROPE
	X201	PUMP 2 VFD	SUMP TERMINATION PANEL	1	1"	SPEC	–	–	–	–	–	PULL ROPE
	X202	SUMP TERMINATION PANEL	WETWELL	1	1"	SPEC	–	–	–	–	–	PULL ROPE
	X301	PUMP 3 VFD	SUMP TERMINATION PANEL	1	1"	SPEC	–	–	–	–	–	PULL ROPE
	X302	SUMP TERMINATION PANEL	WETWELL	1	1"	SPEC	–	–	–	–	–	PULL ROPE

NOTES PERTAINING TO CONDUIT SCHEDULE:

1. CONDUIT TYPE "SPEC" IS AS DEFINED IN SPECIFICATIONS SECTION 16110 FOR NON–EXPOSED AND EXPOSED PORTIONS OF CONDUIT RUN.
2. SEE SPECIFICATIONS AND EXPOSED TRANSITION DETAIL OR EQUIPMENT SPECIFIC DETAIL FOR CONDUIT TRANSITION MATERIALS AND METHODS FROM BELOW GROUND TO EXPOSED PORTIONS OF RUN.
3. CONDUITS OVER 15 FT LENGTH (EITHER EMPTY OR WITH CONDUCTORS SIZED LESS THAN #8 AWG), SHALL INCLUDE A POLY PULL STRING. STRING SHALL BE TIED OFF AT EACH END.
4. FITTINGS, CONDULETS, BOXES AND COVERS SHALL MATCH DUTY OF ADJACENT PIPE, SEE SPECIFICATIONS 16110.
5. WIRE SIZING IN TABLE IS BASED ON COPPER CONDUCTORS, THHN INSULATION, WITH TYPE C STRANDING. OTHER CONDUCTOR TYPES, IF ALLOWED OR REQUIRED PER SPECIFICATION, MAY REQUIRE CONDUITS TO BE UPSIZED BY CONTRACTOR AND SUBMITTED FOR APPROVAL.
6. SEE GENERAL NOTES ON LIGHTING AND RECEPTACLE PLAN FOR CONDUIT REQUIREMENTS FOR ELECTRICAL DEVICES WITHOUT CONDUITS SHOWN, CONDUIT NUMBERS, OR NOT LISTED IN SCHEDULE.

REGISTERED PROFESSIONAL ENGINEER
THOMAS P. FRISCH
No. E15761
ELECTRICAL
STATE OF CALIFORNIA
05/27/2020

DESIGN T. FRISCH
DRAWN N. CONANT
CHECKED M. FRISCH
APPROVED M. FISHER

FRISCH ENGINEERING, INC.
CONSULTING ELECTRICAL ENGINEERS
3405 FOLSOM BLVD, UNIT 600
SACRAMENTO, CA 95816
PH 916 353 1025
WWW.FRISCHENGINEERING.COM
FILE: 17-082 SHEET OUT.DWG
DATE: MAY 28, 2020 TIME: 7:11:41 PM

WATERWORKS ENGINEERS
2260 Douglas Blvd. Suite 150 • Roseville, CA 95661 • 916-780-2888

CITY OF MORRO BAY
WATER RECLAMATION FACILITY
LIFT STATON AND OFFSITE PIPELINES

ELECTRICAL
PUMP STATION A
CONDUIT SCHEDULE 2

DATE MAY 2020
PROJECT NUMBER 17-082
DRAWING NUMBER 10-E-07
SHEET NUMBER 198

CONFORMED SET - DEC 2020

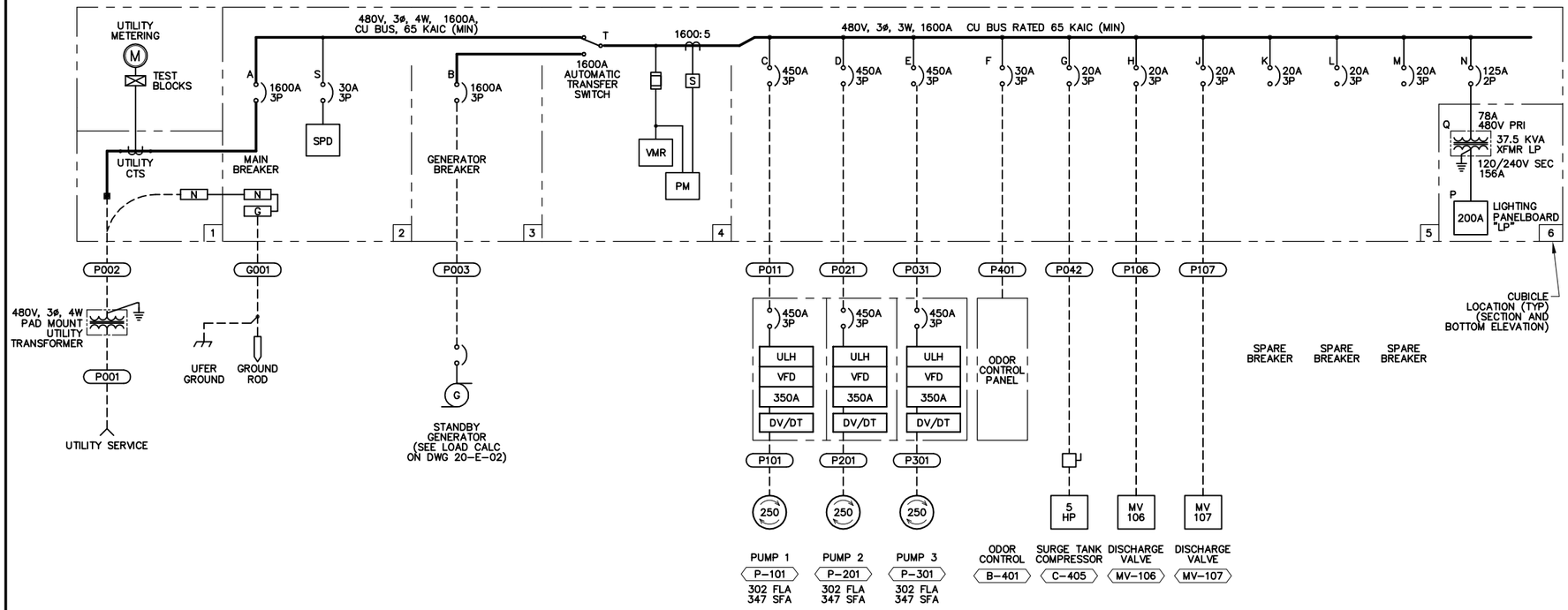

ONE-LINE DIAGRAM

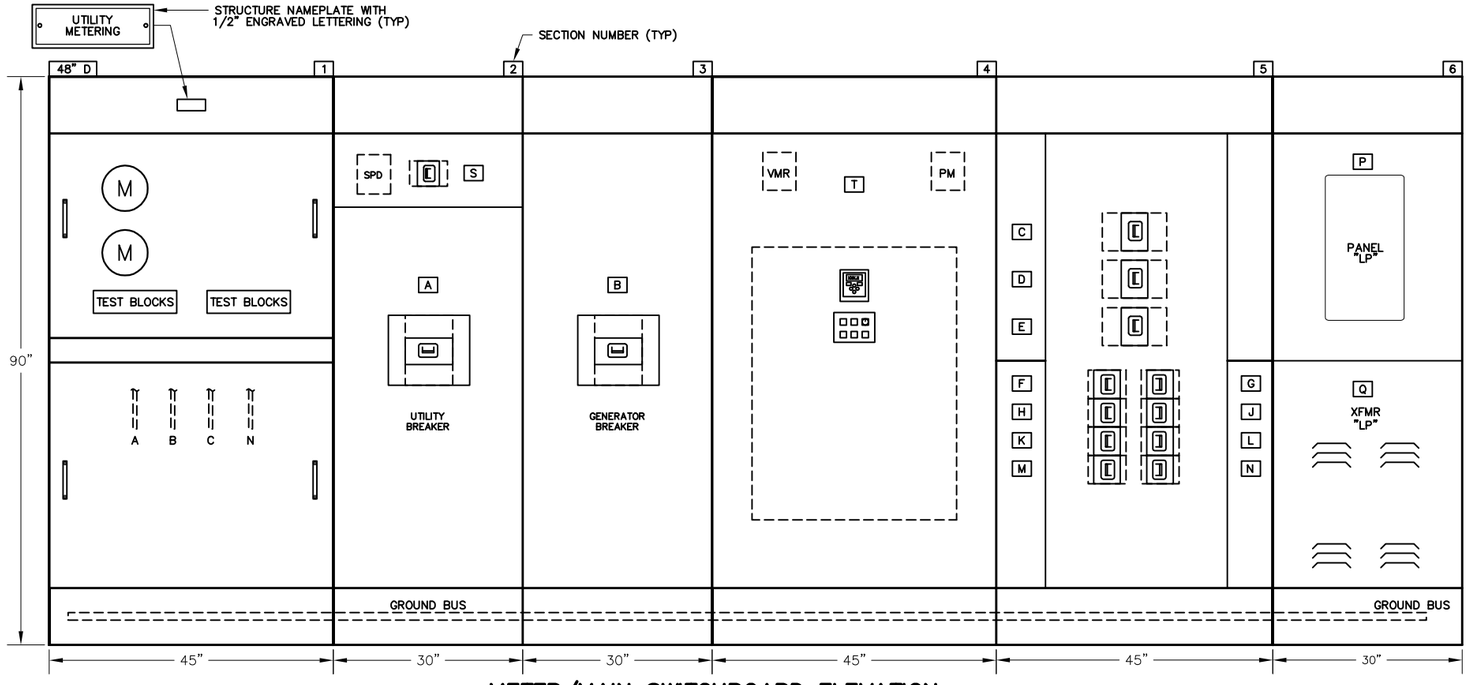

METER/MAIN SWITCHBOARD ELEVATION

NEMA 1, INDOOR

GENERAL NOTES:

1. REAR ACCESS SHALL NOT BE REQUIRED TO SERVICE OR REPLACE SWITCHBOARD COMPONENTS.
2. EACH BREAKER SHALL HAVE A PADLOCKABLE HASP TO LOCK BREAKER IN THE OFF POSITION.
3. ALL DIMENSIONS ARE APPROXIMATE. ACTUAL DIMENSIONS SHALL BE PER MANUFACTURER APPROVED IN SUBMITTAL.
4. FURNISH AND APPLY ENGRAVED WHITE LETTERING ON BLACK PLASTIC NAMEPLATES FOR DEVICES AND BREAKERS WHERE NOTED, AT MINIMUM, WITH A LETTERED BOX. TEXT HEIGHT SHALL BE 1/4 INCH MINIMUM. REFRENCE ONE-LINE DIAGRAM FOR LABEL.
5. FURNISH CODE REQURIED WARNING LABELS AND EQUIPMENT RATINGS LABELS.

NOTES:

ADD THE PREFIX 20 TO COMPLETE CONDUIT, INSTRUMENT OR EQUIPMENT TAG REFFERENCE ON THIS SHEET.

REGISTERED PROFESSIONAL ENGINEER THOMAS P. FRISCH No. E15761 ELECTRICAL STATE OF CALIFORNIA

05/27/2020

DESIGN T. FRISCH
DRAWN N. CONANT
CHECKED M. FRISCH
APPROVED M. FISHER

FRISCH ENGINEERING, INC.
CONSULTING ELECTRICAL ENGINEERS
13405 FOLSOM BLVD, UNIT 600
FOLSOM, CA 95630
PH 916 353 1025
WWW.FRISCHENGINEERING.COM
FILE: 1805H-E20E01.DWG
DATE: MAY 28, 2020 TIME: 11:05:43AM

WATERWORKS ENGINEERS
2260 Douglas Blvd, Suite 150 • Roseville, CA 95661 • 916-780-2888

CITY OF MORRO BAY
WATER RECLAMATION FACILITY
LIFT STATON AND OFFSITE PIPELINES

ELECTRICAL
PUMP STATION B
METER/MAIN ONE-LINE AND ELEVATION

DATE MAY 2020
PROJECT NUMBER 17-082
DRAWING NUMBER 20-E-01
SHEET NUMBER 199

CONFORMED SET - DEC 2020

PANEL "LP"

LOCATION:SWBD SECTION
ENCLOSURE:NEMA 1A
AIC RATING:10 KAIC

120/ 240 VOLTS, 1 PHASE, 3 WIRE
200 AMP BUS
200 AMP MAIN BREAKER

BKR NO.	DESCRIPTION	LOAD VA	LINE AMPS		AMPS/ POLE	BKR NO.
1	LIGHTING ELECTRICAL ROOM	336	2.8		20/1	1
3	LIGHTING OUTDOORS	304		2.5	20/1	3
5	POLE LIGHT	600	5.0		20/1	5
7	RECEPTACLE ELECTRICAL ROOM	900		7.5	20/1	7
9	RECEPTACLE ELECTRICAL ROOM	900	7.5		20/1	9
11	RECEPTACLE OUTDOOR	1200		10.0	20/1	11
13	SPARE	0	0.0		20/1	13
15	SPARE	0		0.0	20/1	15
17	SPARE	0	0.0		20/1	17
19	SPARE	0		0.0	20/1	19
21	SPARE	0	0.0		20/1	21
23	SPARE	0		0.0	20/1	23
25	SPARE	0	0.0		20/1	25
27	SPACE	0		0.0		27
29	SPACE	0	0.0			29
31	SPACE	0		0.0		31
33	SPACE	0	0.0			33
35	SPACE	0		0.0		35
37	SPACE	0	0.0			37
39	SPACE	0		0.0		39
41	SPACE	0	0.0			41

BKR NO.	AMPS/ POLE	LINE AMPS		LOAD VA	DESCRIPTION	BKR NO.
2	20/1	5.0		600	CONTROL PANEL	2
4	20/1		2.5	300	CONTROL PANEL AUXILLIARY	4
6	20/1	2.5		300	COMMUNICATION PANEL	6
8	20/1		0.0	0	SPARE	8
10	15/1	2.5		300	VFD MAS RELAY PANEL	10
12	20/1		15.0	1800	GENERATOR BATTERY CHARGER	12
14	40/2	16.7		2000	GENERATOR HEATER	14
16			16.7	2000		16
18	20/1	12.5		1500	VEHICLE GATE	18
20	20/1		0.0	0	SPARE	20
22	40/2	25.0		3000	HVAC UNIT 1 OUTDOOR	22
24			25.0	3000		24
26	15/1	0.6		75	HVAC UNIT 1 INDOOR	26
28	40/2		25.0	3000	HVAC UNIT 2 OUTDOOR	28
30		25.0		3000		30
32	15/1		0.6	75	HVAC UNIT 2 INDOOR	32
34		0.0		0	SPACE	34
36			0.0	0	SPACE	36
38		0.0		0	SPACE	38
40			0.0	0	SPACE	40
42		0.0		0	SPACE	42

PHASE	A	B
LEFT SIDE AMPS	15.30	20.03
LEFT SIDE KVA	1.84	2.40
TOTAL PHASE KVA	12.61	12.58
TOTAL PHASE AMPS	105	105
% OF AVERAGE	100	100

NEUTRAL

GROUND

A	B	PHASE
89.79	84.79	RIGHT SIDE AMPS
10.78	10.18	RIGHT SIDE KVA
25.19		TOTAL KVA
104.96		TOTAL AMPS @ 240V, 1P
0.80		DIVERSITY FACTOR
20.15		LOAD KVA

NOTES:
1 MEANS OF WIRE COLOR CODING SHALL BE POSTED ON PANELBOARD PER NEC 210 (4)
2 ASTERISK (*) DENOTES GFI BREAKER REQUIRED WITH 5 MA SENSITIVITY
3 TILDA (~) DENOTES GFI BREAKER REQUIRED WITH 30 MA SENSITIVITY

LOAD CALCULATIONS

LOAD DESCRIPTION		CONNECTED LOAD LOAD	QTY	TOTAL	DEMAND LOAD LOAD	QTY	TOTAL	GENERATOR LOAD LOAD	QTY	TOTAL
250HP PUMP		325.00 A	3	810599.8 VA	325.00 A	2	540399.9 VA	325.00 A	2	540399.9 VA
5HP SURGE TANK SYSTEM		7.60 A	1	6318.5 VA	7.60 A	1	6318.5 VA	7.60 A	1	6318.5 VA
1HP MOTORIZED VALVE		2.10 A	2	3491.8 VA	2.10 A	1	1745.9 VA	2.10 A	1	1745.9 VA
1HP ODOR CONTROL		2.10 A	1	1745.9 VA	2.10 A	1	1745.9 VA	2.10 A	1	1745.9 VA
PANELBOARD LP	120/240	30.30 A	1	25190.0 VA	24.24 A	1	20152.0 VA	24.24 A	1	20152.0 VA
TOTAL LOAD =		1019.20 A	<	847346.0 VA	686.04 A	<	570362.2 VA	686.04 A	<	570362.2 VA
LOAD CORRECTION FACTORS								GENERATOR SIZE		
LARGEST MOTOR LOAD x 25%								NAMEPLATE = 1000 KW 1250 KVA		
250HP HP => 0.25 x 270199.9 VA =		81.25 A		67550.0 VA	81.25 A		67550.0 VA	@ TEMP OF 100 deg F		
80% BREAKER DERATING = TOTAL x 0.25 =		275.11 A		228724.0 VA	191.82 A		159478.0 VA	ELEVATION OF 200 FT ASL		
FOR CONTINUOUS LOADS NEC 210-20								DERATED SIZE = 977.0 KW 1221.3 KVA		
SERVICE SIZE (MIN) =		1375.56 A		1143620.0VA	959.11 A		797390.2VA	AMPERAGE = 1469 A @ 0.8 PF		
UTILITY SERVICE SIZE REQUIRED =		1600 AMP						UTLIZATION % = 53 % @ 0.90 PF		
480V, 3 PHASE, 4 WIRE										

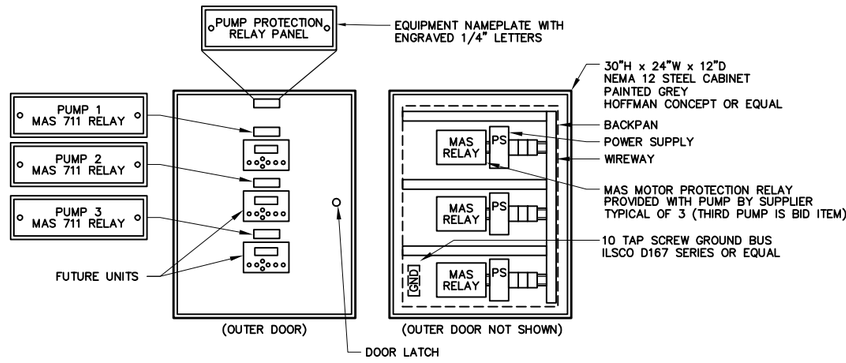

MAS – MAS RELAY PANEL
NOT TO SCALE

REGISTERED PROFESSIONAL ENGINEER
THOMAS P. FRISCH
No. E15761
ELECTRICAL
STATE OF CALIFORNIA
05/27/2020

DESIGN T. FRISCH
DRAWN N. CONANT
CHECKED M. FRISCH
APPROVED M. FISHER

FRISCH ENGINEERING, INC.
CONSULTING ELECTRICAL ENGINEERS
3485 FOLSOM BLVD, UNIT 600
FOLSOM, CA 95630
PH 916 353 1025
WWW.FRISCHENGINEERING.COM

FILE: 17-082-E-02.DWG
DATE: MAY 28, 2020 TIME: 7:06:14PM

WATERWORKS ENGINEERS
2260 Douglas Blvd, Suite 150 • Roseville, CA 95661 • 916-780-2888

CITY OF MORRO BAY
WATER RECLAMATION FACILITY
LIFT STATION AND OFFSITE PIPELINES

ELECTRICAL
PUMP STATION B
PANELBOARD SCHEDULE AND LOAC CALCULATIONS

DATE MAY 2020
PROJECT NUMBER 17-082
DRAWING NUMBER 20-E-02
SHEET NUMBER 200

CONFORMED SET - DEC 2020

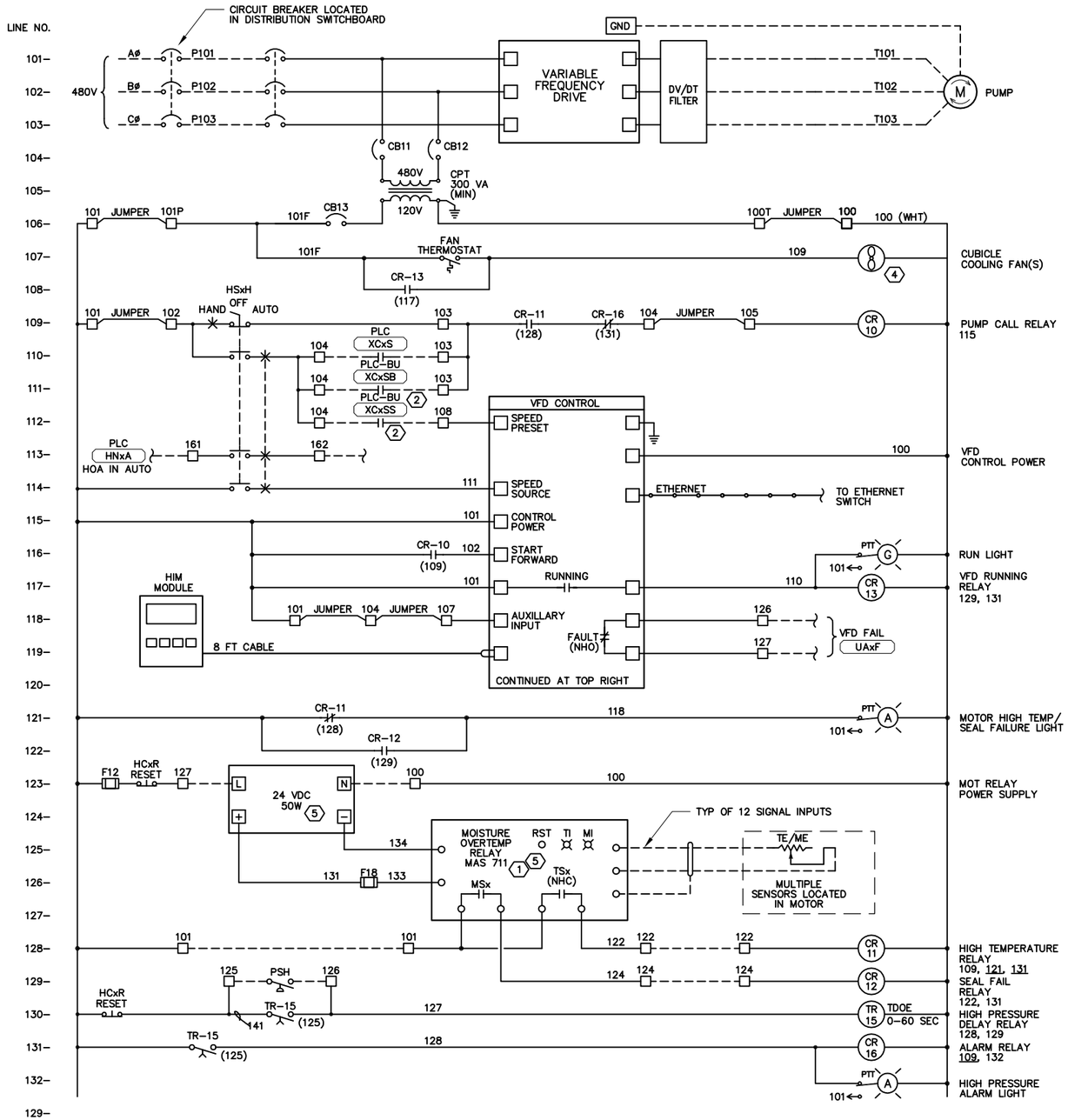

VFD ELEMENTARY DIAGRAM

SIMILAR DIAGRAM FOR PUMPS 10, 20, 30 – SEE NOTES

P101 P201 P301

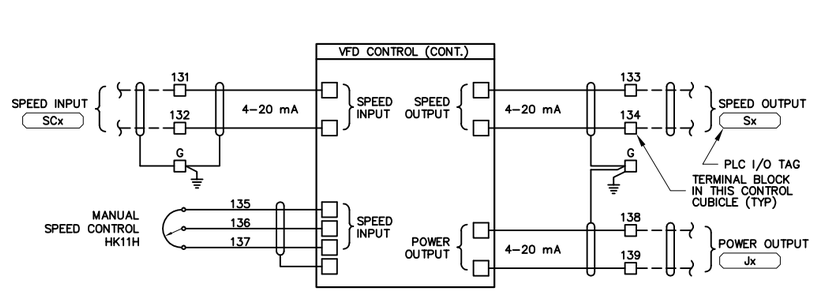

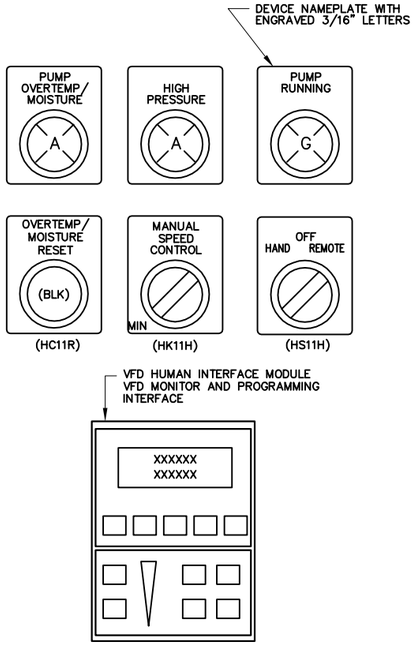

DOOR LAYOUT

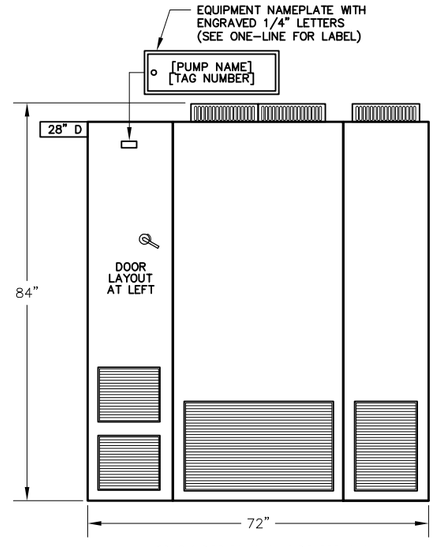

CABINET BUILT VFD PANEL ELEVATION

NOT TO SCALE

NOTES REFERENCED IN DRAWING:

1. RELAY TO BE SUPPLIED BY PUMP MANUFACTURER. INSTALL AND WIRE PER MANUFACTURER'S DRAWINGS PRIOR TO FACTORY TESTING AND DELIVERY TO JOB SITE.
2. FROM BACK-UP CONTROLS. SEE CONTROL PANEL DRAWGINS DWG 00-E-06 – 00-E-08.
3. PROVIDE VFD WITH 115 VAC CONTROL CIRCUIT INTERFACE. NO EXCEPTIONS.
4. PROVIDE COOLING FANS AS REQUIRED TO REMOVE HEAT GENERATED BY INTERNAL COMPONENTS AND MAINTAIN TEMPERATURE WITHIN DRIVE MANUFACTURER RATINGS.
5. RELAY AND POWER SUPPLY TO BE LOCATED IN REMOTE PANEL. SEE DETAIL MAS.

GENERAL NOTES:

1. SIMILAR DIAGRAM FOR PUMP NO. 1 ~ 3.
2. TERMINAL BLOCKS AND WIRES SHALL BE LABELED SAME EXCEPTION: WIRES TO PLC SHALL BE NUMBERED PER CONTROL PANEL TERMINAL BLOCK NUMBER.

REGISTERED PROFESSIONAL ENGINEER
THOMAS P. FRISCH
No. E15761
ELECTRICAL
STATE OF CALIFORNIA

05/27/2020

DESIGN T. FRISCH
DRAWN N. CONANT
CHECKED M. FRISCH
APPROVED M. FISHER

FRISCH ENGINEERING, INC.
CONSULTING ELECTRICAL ENGINEERS
3485 FOLSOM BLVD, UNIT 600
FOLSOM, CA 95630
PH 916 353 1025
WWW.FRISCHENGINEERING.COM
TOM@FRISCHENGINEERING.COM

FILE: 17-082 VFD DWG.DWG
DATE: MAY 28, 2020 TIME: 4:15:15PM

WATERWORKS ENGINEERS
2260 Douglas Blvd. Suite 150 • Roseville, CA 95661 • 916-780-2888

CITY OF MORRO BAY
WATER RECLAMATION FACILITY
LIFT STATON AND OFFSITE PIPELINES

ELECTRICAL
VFD ELEMENTARY DIAGRAM

DATE MAY 2020
PROJECT NUMBER 17-082
DRAWING NUMBER 20-E-03
SHEET NUMBER 201

CONFORMED SET - DEC 2020

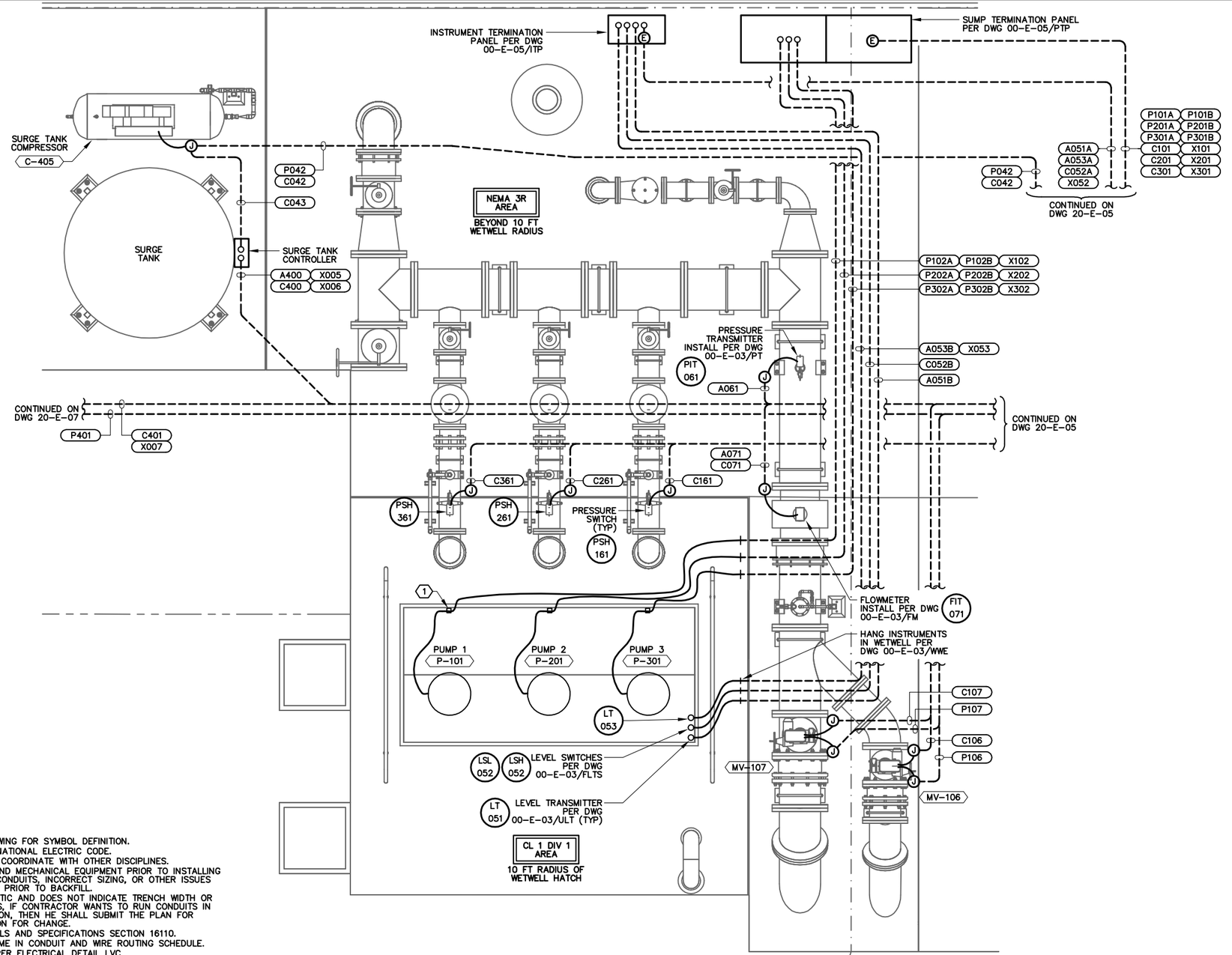

ELECTRICAL PLAN NOTES:

1. SEE ELECTRICAL SYMBOLS AND ABBREVIATIONS DRAWING FOR SYMBOL DEFINITION.
2. ALL WORK SHALL CONFORM TO LOCAL CODES AND NATIONAL ELECTRIC CODE.
3. SITEPLAN ACCURATE FOR ELECTRICAL WORK ONLY. COORDINATE WITH OTHER DISCIPLINES.
4. CONFIRM HOOKUP REQUIREMENTS FOR ELECTRICAL AND MECHANICAL EQUIPMENT PRIOR TO INSTALLING UNDERGROUND CONDUIT AND STUB-UPS. MISSING CONDUITS, INCORRECT SIZING, OR OTHER ISSUES MUST BE BROUGHT TO THE ATTENTION OF ENGINEER PRIOR TO BACKFILL.
5. CONDUIT ROUTING IS SHOWN GENERALLY DIAGRAMMATIC AND DOES NOT INDICATE TRENCH WIDTH OR TRENCH LAYOUT. FOR CONDUITS OUTSIDE BUILDINGS, IF CONTRACTOR WANTS TO RUN CONDUITS IN ROUTES OTHER THAN THOSE SHOWN FOR ANY REASON, THEN HE SHALL SUBMIT THE PLAN FOR APPROVAL PRIOR TO INSTALLATION. SPECIFY REASON FOR CHANGE.
6. INSTALL NON-UTILITY CONDUITS PER DRAWING DETAILS AND SPECIFICATIONS SECTION 16110.
7. CONDUITS SIZE, TYPE AND FILL DEFINED BY TAG NAME IN CONDUIT AND WIRE ROUTING SCHEDULE.
8. INSTALL UNDERGROUND NON-DUCTBANK CONDUITS PER ELECTRICAL DETAIL LVC.
9. CONDUIT TRANSITIONS SHALL BE PER EXPOSED CONDUIT TRANSITION DETAIL ECT.
10. EXPOSED CONDUIT TYPE AND FITTINGS TO BE USED ABOVE TRANSITION SHALL BE PER AREA CLASSIFICATION DEFINED IN CONDUIT SPECIFICATIONS AND EQUIPMENT SPECIFIC DETAIL.
11. REPAIR SURFACE TO PREVIOUS CONDITION FOR ALL UNDERGROUND CONDUIT ROUTES. GROUT, CAULK, AND PAINT ANY PENETRATIONS INTO STRUCTURES FOR WATERTIGHT SEAL.
12. USE SS EXPANSION WEDGE ANCHORS OR EPOXY ANCHORS AS NECESSARY FOR EQUIPMENT MOUNTING.
13. RECEPTACLES TO BE GROUND FAULT INTERRUPTER (GFI) TYPE AND WEATHERPROOF (WP) OUTDOORS AND WHERE SHOWN.
14. STUB UP CONDUITS BENEATH GENERATOR FRAME PER MANUFACTURER RECOMMENDATIONS. USE FLEXIBLE CONDUIT FOR TRANSITION BETWEEN EXPOSED CONDUIT TRANSTION AND ELECTRICAL CONNECTION BOX AND GENERATOR CONTROL PANEL.
15. UTILITY PRIMARY AND SECONDARY CONDUITS, TRANSFORMER PAD, PULL BOXES AND REMOVABLE BOLLARDS SHALL BE INSTALLED PER POWER UTILITY ENGINEERED DRAWINGS AND STANDARDS.
16. ASSUME 100 FT OF UNDERGROUND RUN BEYOND DRAWING FOR UTILITY CONNECTIONS. CONNECTION POINT SHALL BE AS DETERMINED BY UTILITY.

NOTES:

ADD THE PREFIX 20 TO COMPLETE INSTRUMENT OR EQUIPMENT TAG REFFERENCE ON THIS SHEET.
EXAMPLE: P-20101 FOR PUMP 1

DRAWING REFERENCED NOTES:

(1) HANG PUMP CABLES ON J-HOOKS IN WETWELL TO ALL PUMPS.

PUMP STATION B POWER AND CONTROL PLAN

SCALE: 1/2" = 1'

0 2 4
(Approximate Scale in Feet)

REGISTERED PROFESSIONAL ENGINEER
THOMAS P. FRISCH
No. E15761
ELECTRICAL
STATE OF CALIFORNIA
05/27/2020

DESIGN T. FRISCH
DRAWN N. CONANT
CHECKED M. FRISCH
APPROVED M. FISHER

FRISCH ENGINEERING, INC.
CONSULTING ELECTRICAL ENGINEERS
3485 FOLSOM BLVD, UNIT 600
FOLSOM, CA 95630
PH 916 353 1025
WWW.FRISCHENGINEERING.COM
FILE: 1154-SHEET-054.DWG
DATE: MAY 29, 2020 TIME: 2:11:05PM

WATERWORKS ENGINEERS
2260 Douglas Blvd. Suite 150 • Roseville, CA 95661 • 916-780-2888

CITY OF MORRO BAY
WATER RECLAMATION FACILITY
LIFT STATON AND OFFSITE PIPELINES

ELECTRICAL
PUMP STATION B
POWER AND CONTROL PLAN

DATE MAY 2020
PROJECT NUMBER 17-082
DRAWING NUMBER 20-E-04
SHEET NUMBER 202

CONFORMED SET - DEC 2020

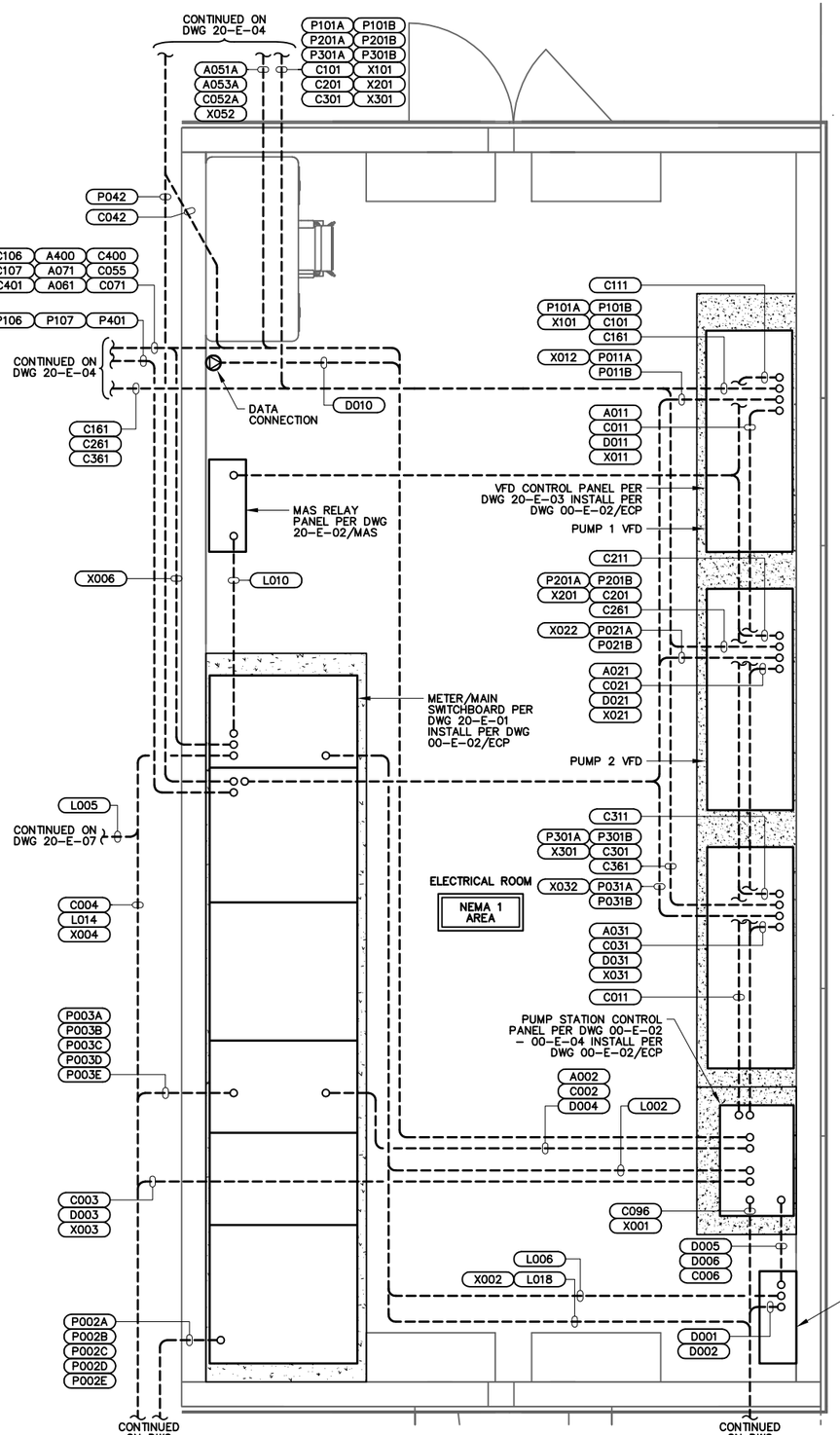

PUMP STATION B ELECTRICAL BUILDING POWER AND CONTROL PLAN

SCALE: 1/2" = 1'

0 2 4
(Approximate Scale In Feet)

ELECTRICAL PLAN NOTES:

1. SEE ELECTRICAL SYMBOLS AND ABBREVIATIONS DRAWING FOR SYMBOL DEFINITION.
2. ALL WORK SHALL CONFORM TO LOCAL CODES AND NATIONAL ELECTRIC CODE.
3. SITEPLAN ACCURATE FOR ELECTRICAL WORK ONLY. COORDINATE WITH OTHER DISCIPLINES.
4. CONFIRM HOOKUP REQUIREMENTS FOR ELECTRICAL AND MECHANICAL EQUIPMENT PRIOR TO INSTALLING UNDERGROUND CONDUIT AND STUB-UPS. MISSING CONDUITS, INCORRECT SIZING, OR OTHER ISSUES MUST BE BROUGHT TO THE ATTENTION OF ENGINEER PRIOR TO BACKFILL.
5. CONDUIT ROUTING IS SHOWN GENERALLY DIAGRAMMATIC AND DOES NOT INDICATE TRENCH WIDTH OR TRENCH LAYOUT. FOR CONDUITS OUTSIDE BUILDINGS, IF CONTRACTOR WANTS TO RUN CONDUITS IN ROUTES OTHER THAN THOSE SHOWN FOR ANY REASON, THEN HE SHALL SUBMIT THE PLAN FOR APPROVAL PRIOR TO INSTALLATION. SPECIFY REASON FOR CHANGE.
6. INSTALL NON-UTILITY CONDUITS PER DRAWING DETAILS AND SPECIFICATIONS SECTION 16110.
7. CONDUITS SIZE, TYPE AND FILL DEFINED BY TAG NAME IN CONDUIT AND WIRE ROUTING SCHEDULE.
8. INSTALL UNDERGROUND NON-DUCTBANK CONDUITS PER ELECTRICAL DETAIL LVC.
9. CONDUIT TRANSITIONS SHALL BE PER EXPOSED CONDUIT TRANSITION DETAIL ECT.
10. EXPOSED CONDUIT TYPE AND FITTINGS TO BE USED ABOVE TRANSITION SHALL BE PER AREA CLASSIFICATION DEFINED IN CONDUIT SPECIFICATIONS AND EQUIPMENT SPECIFIC DETAIL.
11. REPAIR SURFACE TO PREVIOUS CONDITION FOR ALL UNDERGROUND CONDUIT ROUTES. GROUT, CAULK, AND PAINT ANY PENETRATIONS INTO STRUCTURES FOR WATERTIGHT SEAL.
12. USE SS EXPANSION WEDGE ANCHORS OR EPOXY ANCHORS AS NECESSARY FOR EQUIPMENT MOUNTING.
13. RECEPTACLES TO BE GROUND FAULT INTERRUPTER (GFI) TYPE AND WEATHERPROOF (WP) OUTDOORS AND WHERE SHOWN.
14. STUB UP CONDUITS BENEATH GENERATOR FRAME PER MANUFACTURER RECOMMENDATIONS. USE FLEXIBLE CONDUIT FOR TRANSITION BETWEEN EXPOSED CONDUIT TRANSTION AND ELECTRICAL CONNECTION BOX AND GENERATOR CONTROL PANEL.
15. UTILITY PRIMARY AND SECONDARY CONDUITS, TRANSFORMER PAD, PULL BOXES AND REMOVABLE BOLLARDS SHALL BE INSTALLED PER POWER UTILITY ENGINEERED DRAWINGS AND STANDARDS.
16. ASSUME 100 FT OF UNDERGROUND RUN BEYOND DRAWING FOR UTILITY CONNECTIONS. CONNECTION POINT SHALL BE AS DETERMINED BY UTILITY.

NOTES:

ADD THE PREFIX 20 TO COMPLETE INSTRUMENT OR EQUIPMENT TAG REFFERENCE ON THIS SHEET.
EXAMPLE: P-20101 FOR PUMP 1

REGISTERED PROFESSIONAL ENGINEER
THOMAS P. FRISCH
No. E15761
ELECTRICAL
STATE OF CALIFORNIA
05/27/2020

DESIGN T. FRISCH
DRAWN N. CONANT
CHECKED M. FRISCH
APPROVED M. FISHER

FRISCH ENGINEERING, INC.
CONSULTING ELECTRICAL ENGINEERS
3305 FOLSOM BLVD, UNIT 600
SACRAMENTO, CA 95816
PH 916 353 1025
WWW.FRISCHENGINEERING.COM

FILE: 15-1SHEET-2054-01.DWG
DATE: MAY 28, 2020 TIME: 11:07:20AM

WATERWORKS ENGINEERS
2260 Douglas Blvd. Suite 150 • Roseville, CA 95661 • 916-780-2888

CITY OF MORRO BAY
WATER RECLAMATION FACILITY
LIFT STATION AND OFFSITE PIPELINES

ELECTRICAL
PUMP STATION B
ELECTRICAL BUILDING
POWER AND CONTROL PLAN

DATE MAY 2020
PROJECT NUMBER 17-082
DRAWING NUMBER 20-E-05
SHEET NUMBER 203

CONFORMED SET - DEC 2020

FIXTURE SCHEDULE

CODE LETTER	FIXTURE TYPE	FIXTURE LAMPS	WATTS/ FIXTURE	MANUFACTURER OR APPROVED EQUAL	MOUNTING ARRANGEMENT	NOTES
A	STRIP LUMINAIRE, 4 FT, VAPORTIGHT MOLDED POLYCARBONATE HOUSING FROSTED LENS, MEDIUM DISTRIBUTION	6000 LUMEN 4500K	120V 50W	ATLAS ILW48LED4D RAB SEAL4–50/D10	CEILING MOUNT FIXTURE	U.L. LISTED –20F TO 140F
B	WALL PACK LIGHT – MEDIUM DARK BRONZE COLOR ALUMINUM CASE	7000 LUMEN 4000K	120V 64W	ATLAS WPM64LED RAB WPLEDFC80N/PCS	WALL MOUNT 15 FT AFF	U.L. LISTED FOR WET LOCATIONS PHOTOCELL CONTROL FULL CUTOFF
EXE	EXIT LIGHT PACK WITH EGRESS LAMPS AND REMOTE OUTDOOR EGRESS FIXTURE LED LAMPS WITH RED LED SIGN INTEGRAL BATTERY AND CHARGER	2 LED 3W	120V 5W	DUAL–LITE HCX–U–R–W–03L–RC12 CPRSB0603L	WALL MOUNT 9 FT AFF	WHITE INTERIOR, BROWN EXTERIOR DUAL LED LAMPS INDOORS AND OUT 12W REMOTE LIGHT CAPACITY
EF	12" EXHAUST FAN WITH FAN INTAKE GUARD FIBERGLASS GRAVITY OPERATED SHUTTER AND THERMOSTAT CONTROL		1/8 HP 120 VAC 1 PHASE	DAYTON GRAINGER 5C530	WALL MOUNT	LINE VOLTAGE THERMOSTAT 50 – 90 DEG F COOLING GRAINGER 6GVX8 OR EQUAL
IDU	INDOOR HVAC UNIT		120 VAC	SEE MECHANICAL		
ODU	OUTDOOR HVAC UNIT		240 VAC	SEE MECHANICAL		PROVIDE DISCONNECT
RDU	REFRIGERANT DISTRIBUITON UNIT		120 VAC	SEE MECHANICAL		

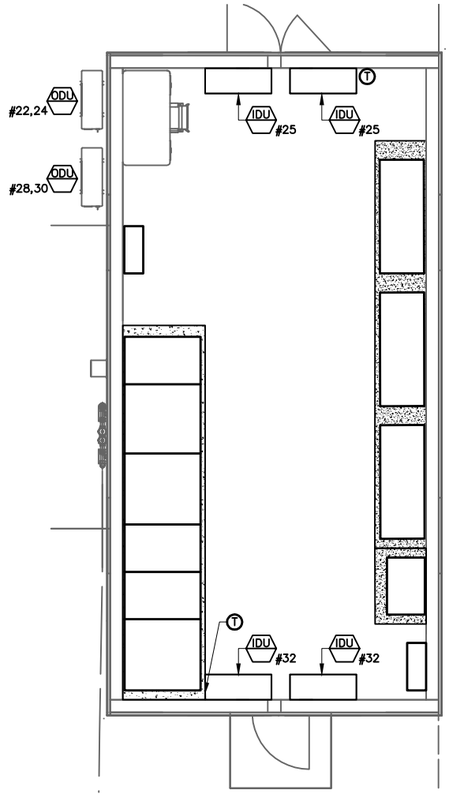

PUMP STATION B HVAC PLAN

SCALE: 1/4" = 1'

0 4 8

(Approximate Scale in Feet)

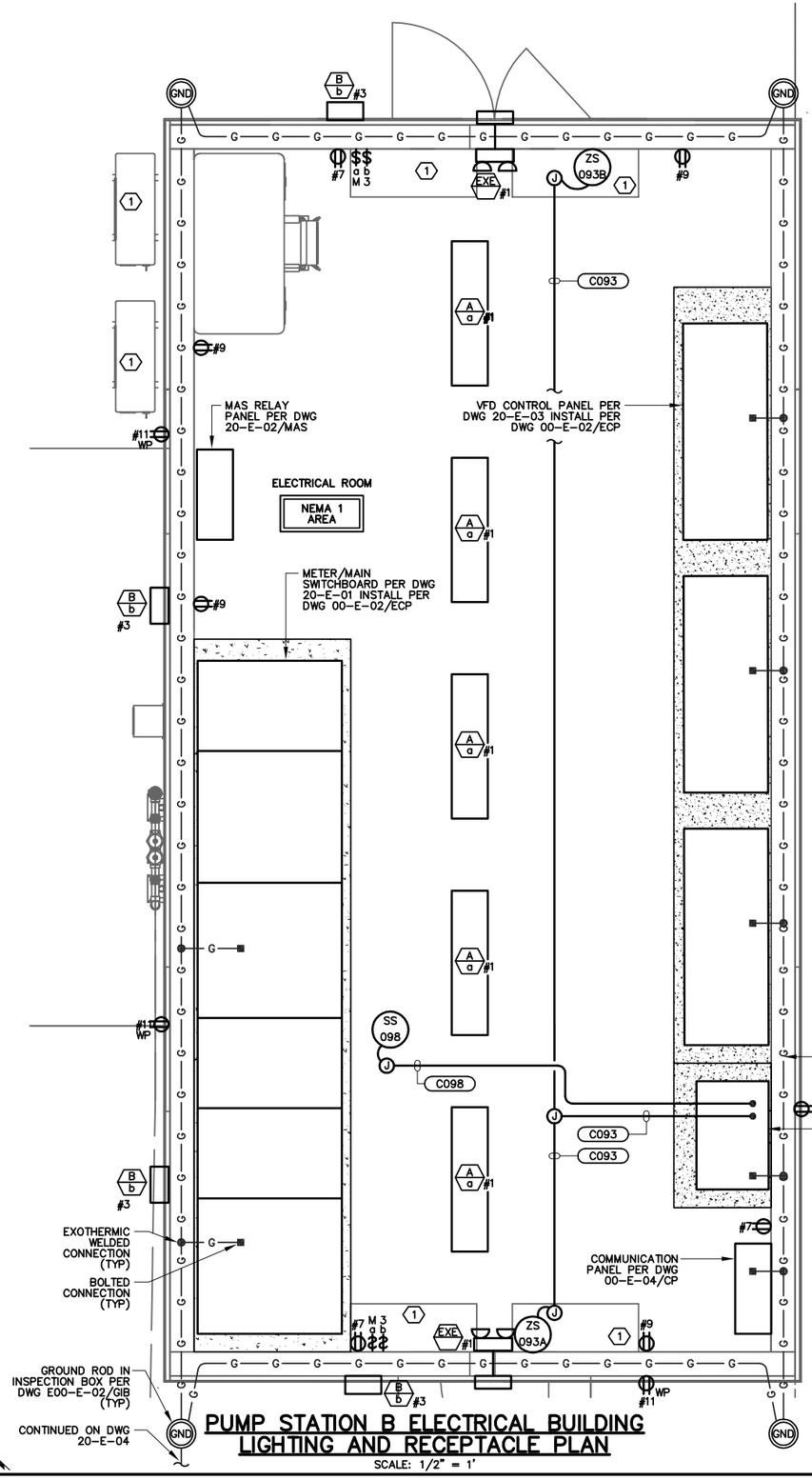

PUMP STATION B ELECTRICAL BUILDING LIGHTING AND RECEPTACLE PLAN

SCALE: 1/2" = 1'

05/27/2020

DRAWING REFERENCED NOTES:

(1) HVAC EQUIPMENT PER PUMP STATION B HVAC PLAN SEE LEFT

GENERAL NOTES THAT APPLY TO LIGHTING AND RECEPTACLE PLAN.

1. THESE NOTES SHALL APPLY TO ALL EQUIPMENT OR FIXTURES WITH ELECTRICAL CONNECTIONS BUT WITHOUT CONDUITS SHOWN, CONDUIT NUMBERS, OR NOT LISTED IN SCHEDULE.
2. PROVIDE AND INSTALL NECESSARY WIRES IN SURFACE MOUNT 3/4" (MINIMUM) CONDUIT FOR FOR ELECTRICAL FIXTURE ARRANGEMENT AS SHOWN. MAXIMUM 3 CIRCUITS PER CONDUIT SECTION OVER 24" IN LENGTH. CONDUITS SHALL NOT EXCEED 40% FILL.
3. CONDUITS UNDER SLAB SHALL BE PVC–40 WITH STUB–OUTS PER EXPOSED CONDUIT TRANSITION DETAIL.
4. CONDUITS ABOVE CEILING SHALL BE EMT WITH COMPRESSION STYLE FITTINGS. CONDUITS BELOW CEILING SHALL BE GRS. ACCESS TO ATTIC AREA SHALL NOT BE REQUIRED TO INSTALL CONDUCTORS.
5. DEVICE BOXES AND CONDUIT BODIES SHALL BE CAST IRON OR ALUMINUM WITH THREADED HUB.
6. CONDUCTORS SHALL BE COPPER TYPE THHN, CLASS C STRANDING, #12 AWG (MINIMUM). SIZED PER NEC BY CIRCUIT AMPACITY.
7. MOUNT CONDUITS USING SINGLE BOLT GALVANIZED PIPE STRAPS AND CLAMP BACK SPACERS.
8. USE SS EXPANSION WEDGE ANCHORS OR EPOXY ANCHORS AS NECESSARY FOR EQUIPMENT MOUNTING.
9. EXPOSED CONDUIT SHALL BE PAINTED WITH WALL AND/OR CEILING AS SPECIFIED.
10. PROVIDE AND INSTALL FIXTURES PER SCHEDULE THIS PAGE, QUANTITY AS SHOWN IN DRAWINGS.
11. PROVIDE AND INSTALL ALL DEVICE BOXES, JUNCTION BOXES, RECEPTACLES, SWITCHES, AND COVERS MOUNT ALL RECEPTACLES AT 48" AFF UNLESS OTHERWISE NOTED.
12. RECEPTACLES TO BE GROUND FAULT INTERRUPTER (GFI) TYPE AND WEATHERPROOF (WP) WHERE SHOWN.
13. SEE ELECTRICAL SYMBOLS AND ABBREVIATIONS DRAWING FOR SYMBOL DEFINITION.
14. ALL WORK SHALL CONFORM TO LOCAL CODES AND NATIONAL ELECTRIC CODE.
15. SWITCH TYPE: T= TIME SWITCH, M= MOTION DETECTOR, 3= 3–WAY.

NOTES:

ADD THE PREFIX 20 TO COMPLETE INSTRUMENT OR EQUIPMENT TAG REFFERENCE ON THIS SHEET. EXAMPLE: P–20101 FOR PUMP 1

REGISTERED PROFESSIONAL ENGINEER – THOMAS P. FRISCH – No. E15761 – ELECTRICAL – STATE OF CALIFORNIA

DESIGN T. FRISCH
DRAWN N. CONANT
CHECKED M. FRISCH
APPROVED M. FISHER

FRISCH ENGINEERING, INC.
CONSULTING ELECTRICAL ENGINEERS
3405 FOLSOM BLVD, UNIT 600
SACRAMENTO, CA 95816
PH 916 353 1025
WWW.FRISCHENGINEERING.COM

FILE: 18SHEETS2054-DWG
DATE: MAY 28, 2020 TIME: 4:50:05PM

WATERWORKS ENGINEERS
2260 Douglas Blvd. Suite 150 • Roseville, CA 95661 • 916-780-2888

CITY OF MORRO BAY
WATER RECLAMATION FACILITY
LIFT STATION AND OFFSITE PIPELINES

ELECTRICAL
PUMP STATION B
ELECTRICAL BUILDING
LIGHTING AND RECEPTACLE PLAN

DATE MAY 2020
PROJECT NUMBER 17-082
DRAWING NUMBER 20-E-06
SHEET NUMBER 204

CONFORMED SET - DEC 2020

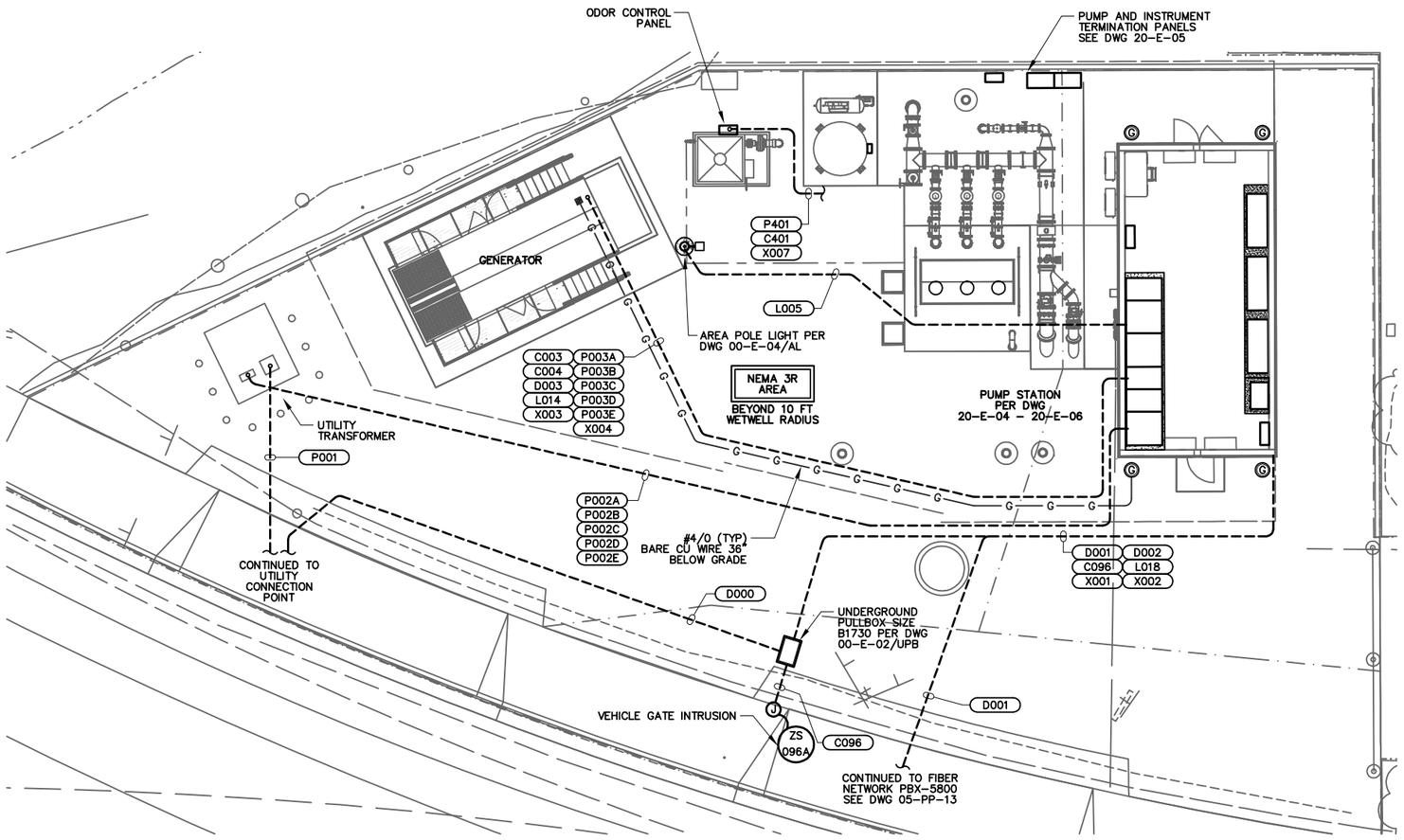

PUMP STATION B ELECTRICAL SITE PLAN

SCALE: 1/8" = 1'

0 8 16
(Approximate Scale In Feet)

ELECTRICAL PLAN NOTES:

1. SEE ELECTRICAL SYMBOLS AND ABBREVIATIONS DRAWING FOR SYMBOL DEFINITION.
2. ALL WORK SHALL CONFORM TO LOCAL CODES AND NATIONAL ELECTRIC CODE.
3. SITEPLAN ACCURATE FOR ELECTRICAL WORK ONLY. COORDINATE WITH OTHER DISCIPLINES.
4. CONFIRM HOOKUP REQUIREMENTS FOR ELECTRICAL AND MECHANICAL EQUIPMENT PRIOR TO INSTALLING UNDERGROUND CONDUIT AND STUB-UPS. MISSING CONDUITS, INCORRECT SIZING, OR OTHER ISSUES MUST BE BROUGHT TO THE ATTENTION OF ENGINEER PRIOR TO BACKFILL.
5. CONDUIT ROUTING IS SHOWN GENERALLY DIAGRAMMATIC AND DOES NOT INDICATE TRENCH WIDTH OR TRENCH LAYOUT. FOR CONDUITS OUTSIDE BUILDINGS, IF CONTRACTOR WANTS TO RUN CONDUITS IN ROUTES OTHER THAN THOSE SHOWN FOR ANY REASON, THEN HE SHALL SUBMIT THE PLAN FOR APPROVAL PRIOR TO INSTALLATION. SPECIFY REASON FOR CHANGE.
6. INSTALL NON-UTILITY CONDUITS PER DRAWING DETAILS AND SPECIFICATIONS SECTION 16110.
7. CONDUITS SIZE, TYPE AND FILL DEFINED BY TAG NAME IN CONDUIT AND WIRE ROUTING SCHEDULE.
8. INSTALL UNDERGROUND NON-DUCTBANK CONDUITS PER ELECTRICAL DETAIL LVC.
9. CONDUIT TRANSITIONS SHALL BE PER EXPOSED CONDUIT TRANSITION DETAIL ECT.
10. EXPOSED CONDUIT TYPE AND FITTINGS TO BE USED ABOVE TRANSITION SHALL BE PER AREA CLASSIFICATION DEFINED IN CONDUIT SPECIFICATIONS AND EQUIPMENT SPECIFIC DETAIL.
11. REPAIR SURFACE TO PREVIOUS CONDITION FOR ALL UNDERGROUND CONDUIT ROUTES. GROUT, CAULK, AND PAINT ANY PENETRATIONS INTO STRUCTURES FOR WATERTIGHT SEAL.
12. USE SS EXPANSION WEDGE ANCHORS OR EPOXY ANCHORS AS NECESSARY FOR EQUIPMENT MOUNTING.
13. RECEPTACLES TO BE GROUND FAULT INTERRUPTER (GFI) TYPE AND WEATHERPROOF (WP) OUTDOORS AND WHERE SHOWN.
14. STUB UP CONDUITS BENEATH GENERATOR FRAME PER MANUFACTURER RECOMMENDATIONS. USE FLEXIBLE CONDUIT FOR TRANSITION BETWEEN EXPOSED CONDUIT TRANSTION AND ELECTRICAL CONNECTION BOX AND GENERATOR CONTROL PANEL.
15. UTILITY PRIMARY AND SECONDARY CONDUITS, TRANSFORMER PAD, PULL BOXES AND REMOVABLE BOLLARDS SHALL BE INSTALLED PER POWER UTILITY ENGINEERED DRAWINGS AND STANDARDS.
16. ASSUME 100 FT OF UNDERGROUND RUN BEYOND DRAWING FOR UTILITY CONNECTIONS. CONNECTION POINT SHALL BE AS DETERMINED BY UTILITY.

NOTES:

ADD THE PREFIX 20 TO COMPLETE INSTRUMENT OR EQUIPMENT TAG REFFERENCE ON THIS SHEET.
EXAMPLE: P-20101 FOR PUMP 1

REGISTERED PROFESSIONAL ENGINEER
THOMAS P. FRISCH
No. E15761
ELECTRICAL
STATE OF CALIFORNIA

05/27/2020

DESIGN T. FRISCH
DRAWN N. CONANT
CHECKED M. FRISCH
APPROVED M. FISHER

FRISCH ENGINEERING, INC.
CONSULTING ELECTRICAL ENGINEERS
3485 FOLSOM BLVD, UNIT 600
FAIRFIELD, CA 94533
PH 916 353 1025
WWW.FRISCHENGINEERING.COM

FILE: 20-E-07.DGN
DATE: MAY 28, 2020 TIME: 4:50:37PM

WATERWORKS ENGINEERS
2260 Douglas Blvd. Suite 150 • Roseville, CA 95661 • 916-780-2888

CITY OF MORRO BAY
WATER RECLAMATION FACILITY
LIFT STATON AND OFFSITE PIPELINES

ELECTRICAL
PUMP STATION B
ELECTRICAL SITE PLAN

DATE MAY 2020
PROJECT NUMBER 17-082
DRAWING NUMBER 20-E-07
SHEET NUMBER 205

CONFORMED SET - DEC 2020

CONDUIT & WIRE ROUTING SCHEDULE

REV	CONDUIT DETAILS TAG NO.	FROM	TO	QTY	SIZE	TYPE	POWER WIRE QTY	POWER WIRE SIZE	CONTROL WIRE QTY	CONTROL WIRE SIZE	GROUND SIZE	NOTES
	A002	CONTROL PANEL	SWITCHBOARD	1	3/4"	SPEC	–	–	–	–	–	PULL ROPE
	A011	CONTROL PANEL	PUMP 1 VFD	1	1-1/2"	SPEC	–	–	3	#18 TSPR	#14	
	A021	CONTROL PANEL	PUMP 2 VFD	1	1-1/2"	SPEC	–	–	3	#18 TSPR	#14	
	A031	CONTROL PANEL	PUMP 3 VFD	1	1-1/2"	SPEC	–	–	3	#18 TSPR	#14	
	A051 A	CONTROL PANEL	INSTRUMENT JUNCTION BOX	1	3/4"	SPEC	–	–	1	#18 TSPR	#14	
	A051 B	INSTRUMENT JUNCTION BOX	LEVEL TRANSMITTER LT-051	1	1"	SPEC	–	–	1	MFG CABLE	–	
	A053A	CONTROL PANEL	INSTRUMENT JUNCTION BOX	1	3/4"	SPEC	–	–	1	#18 TSPR	#14	
	A053B	INSTRUMENT JUNCTION BOX	BACK-UP LEVEL TRANSMITTER LT-053	1	1"	SPEC	–	–	1	MFG CABLE	–	
	A061	CONTROL PANEL	PRESSURE TRANSMITTER PIT-061	1	3/4"	SPEC	–	–	1	#18 TSPR	#14	
	A071	CONTROL PANEL	FLOWMETER FIT-071	1	3/4"	SPEC	–	–	1	#18 TSPR	#14	
	A082	CONTROL PANEL	BUILDING TEMP TIT-082	1	3/4"	SPEC	–	–	1	#18 TSPR	#14	
	A400	CONTROL PANEL	SURGE TANK CONTROLLER	1	1"	SPEC	–	–	4	#18 TSPR	#14	
	C002	CONTROL PANEL	SWITCHBOARD	1	1"	SPEC	–	–	12	#14	#14	
	C003	CONTROL PANEL	GENERATOR	1	1"	SPEC	–	–	6	#14	#14	
	C004	ATS	GENERATOR	1	3/4"	SPEC	–	–	4	#14	#14	
	C006	CONTROL PANEL	COMMUNICATION PANEL	1	1"	SPEC	–	–	4	#14	#12	
	C011	CONTROL PANEL	PUMP 1 VFD	1	1-1/2"	SPEC	–	–	20	#14	#14	
	C021	CONTROL PANEL	PUMP 2 VFD	1	1-1/2"	SPEC	–	–	20	#14	#14	
	C031	CONTROL PANEL	PUMP 3 VFD	1	1-1/2"	SPEC	–	–	20	#14	#14	
	C042	CONTROL PANEL	SURGE COMPRESSOR	1	1"	SPEC	–	–	–	–	–	PULL ROPE
	C043	SURGE TANK CONTROLLER	SURGE COMPRESSOR	1	1"	SPEC	–	–	8	#14	#14	
	C051	CONTROL PANEL	INSTRUMENT JUNCTION BOX	1	3/4"	SPEC	–	–	4	#14	#12	
	C052A	CONTROL PANEL	INSTRUMENT JUNCTION BOX	1	3/4"	SPEC	–	–	6	#14	#14	
	C052B	INSTRUMENT JUNCTION BOX	LEVEL SWITCHES LSH-052, LSL-052	1	1"	SPEC	–	–	4	#14	#14	
	C055	CONTROL PANEL	SURGE TANK	1	1"	SPEC	–	–	4	#14	#14	
	C071	CONTROL PANEL	FLOWMETER FIT-071	1	3/4"	SPEC	–	–	2	#14	#10	
	C093	CONTROL PANEL	BUILDING INTRUSION ZS-093A, ZS-093B	1	3/4"	SPEC	–	–	4	#14	#14	
	C096	VEHICLE GATE INTRUSION	CONTROL PANEL	1	3/4"	SPEC	–	–	2	#14	#14	VIA PB-C01
	C098	CONTROL PANEL	SMOKE ALARM	1	3/4"	SPEC	–	–	4	#14	#14	
	C101	PUMP 1 VFD	SUMP TERMINATION PANEL	1	1"	SPEC	–	–	12	#14	#14	
	C106	CONTROL PANEL	MV-106	1	1"	SPEC	–	–	10	#14	#14	
	C107	CONTROL PANEL	MV-107	1	1"	SPEC	–	–	10	#14	#14	
	C111	PUMP 1 VFD	MAS PANEL	1	3/4"	SPEC	–	–	12	#14	#14	
	C161	PUMP 1 VFD	PUMP 1 HIGH PRESSURE PSH-161	1	3/4"	SPEC	–	–	2	#14	#14	
	C162	PUMP 2 VFD	PUMP 2 HIGH PRESSURE PSH-162	1	3/4"	SPEC	–	–	2	#14	#14	
	C163	PUMP 3 VFD	PUMP 3 HIGH PRESSURE PSH-163	1	3/4"	SPEC	–	–	2	#14	#14	
	C201	PUMP 2 VFD	SUMP TERMINATION PANEL	1	1"	SPEC	–	–	12	#14	#14	
	C211	PUMP 2 VFD	MAS PANEL	1	3/4"	SPEC	–	–	12	#14	#14	
	C301	PUMP 3 VFD	SUMP TERMINATION PANEL	1	1"	SPEC	–	–	12	#14	#14	
	C311	PUMP 3 VFD	MAS PANEL	1	3/4"	SPEC	–	–	12	#14	#14	
	C400	CONTROL PANEL	SURGE TANK CONTROLLER	1	1"	SPEC	–	–	8	#14	#14	
	C401	CONTROL PANEL	ODOR CONTROL PANEL	1	1"	SPEC	–	–	6	#14	#14	
	D000	TEL-CO UTILITY	PB-C01	1	2"	SPEC	–	–	–	–	–	PULL ROPE
	D001	FIBER NETWORK	COMMUNICATION PANEL	1	4"	SPEC	–	–	2	FO CABLE	–	
	D002	PB-C01	COMMUNICATION PANEL	1	3/4"	SPEC	–	–	–	–	–	PULL ROPE
	D003	CONTROL PANEL	GENERATOR	1	3/4"	SPEC	–	–	–	–	–	PULL ROPE
	D004	CONTROL PANEL	SWITCHBOARD	1	3/4"	SPEC	–	–	1	CAT 6	–	
	D006	COMMUNICATION PANEL	CONTROL PANEL	1	3/4"	SPEC	–	–	4	CAT 6	#14	
	D007	COMMUNICATION PANEL	CONTROL PANEL	1	1"	SPEC	–	–	1	FO CABLE	–	PATCH CORD
	D010	CONTROL PANEL	DESK DATA CONNECTION	1	3/4"	SPEC	–	–	1	CAT 6	–	
	D011	CONTROL PANEL	PUMP 1 VFD	1	3/4"	SPEC	–	–	2	CAT 6	#14	
	D021	CONTROL PANEL	PUMP 2 VFD	1	3/4"	SPEC	–	–	2	CAT 6	#14	
	D031	CONTROL PANEL	PUMP 3 VFD	1	3/4"	SPEC	–	–	2	CAT 6	#14	

NOTES PERTAINING TO CONDUIT SCHEDULE:

1. CONDUIT TYPE "SPEC" IS AS DEFINED IN SPECIFICATIONS SECTION 16110 FOR NON-EXPOSED AND EXPOSED PORTIONS OF CONDUIT RUN.
2. SEE SPECIFICATIONS AND EXPOSED TRANSITION DETAIL OR EQUIPMENT SPECIFIC DETAIL FOR CONDUIT TRANSITION MATERIALS AND METHODS FROM BELOW GROUND TO EXPOSED PORTIONS OF RUN.
3. CONDUITS OVER 15 FT LENGTH (EITHER EMPTY OR WITH CONDUCTORS SIZED LESS THAN #8 AWG), SHALL INCLUDE A POLY PULL STRING. STRING SHALL BE TIED OFF AT EACH END.
4. FITTINGS, CONDULETS, BOXES AND COVERS SHALL MATCH DUTY OF ADJACENT PIPE, SEE SPECIFICATIONS 16110.
5. WIRE SIZING IN TABLE IS BASED ON COPPER CONDUCTORS, THHN INSULATION, WITH TYPE C STRANDING. OTHER CONDUCTOR TYPES, IF ALLOWED OR REQUIRED PER SPECIFICATION, MAY REQUIRE CONDUITS TO BE UPSIZED BY CONTRACTOR AND SUBMITTED FOR APPROVAL.
6. SEE GENERAL NOTES ON LIGHTING AND RECEPTACLE PLAN FOR CONDUIT REQUIREMENTS FOR ELECTRICAL DEVICES WITHOUT CONDUITS SHOWN, CONDUIT NUMBERS, OR NOT LISTED IN SCHEDULE.

REGISTERED PROFESSIONAL ENGINEER
THOMAS P. FRISCH
No. E15761
ELECTRICAL
STATE OF CALIFORNIA
05/27/2020

DESIGN T. FRISCH
DRAWN N. CONANT
CHECKED M. FRISCH
APPROVED M. FISHER

FRISCH ENGINEERING, INC.
CONSULTING ELECTRICAL ENGINEERS
3485 FOLSOM BLVD, UNIT 600
FOLSOM, CA 95630
PH 916 353 1025
WWW.FRISCHENGINEERING.COM
FILE: 17-082 SHEET SCHEDULE
DATE: MAY 28, 2020 TIME: 5:13:31 PM

WATERWORKS ENGINEERS
2260 Douglas Blvd. Suite 150 • Roseville, CA 95661 • 916-780-2888

CITY OF MORRO BAY
WATER RECLAMATION FACILITY
LIFT STATON AND OFFSITE PIPELINES

ELECTRICAL
PUMP STATION B
CONDUIT SCHEDULE 1

DATE MAY 2020
PROJECT NUMBER 17-082
DRAWING NUMBER 20-E-08
SHEET NUMBER 206

CONFORMED SET - DEC 2020

CONDUIT & WIRE ROUTING SCHEDULE

REV	CONDUIT DETAILS TAG NO.	FROM	TO	QTY	SIZE	TYPE	POWER WIRE QTY	POWER WIRE SIZE	CONTROL WIRE QTY	CONTROL WIRE SIZE	GROUND SIZE	NOTES
	L002	PANEL LP	CONTROL PANEL	1	3/4"	SPEC	4	#12	–	–	#12	
	L005	PANEL LP	AREA POLE LIGHT	1	3/4"	SPEC	2	#12	–	–	#12	
	L006	PANEL LP	COMMUNICATION PANEL	1	3/4"	SPEC	2	#12	–	–	#12	
	L010	PANEL LP	MAS PANEL	1	3/4"	SPEC	2	#12	–	–	#12	
	L014	PANEL LP	GENERATOR	1	1"	SPEC	2	#8	4	#12	#10	
	L018	PANEL LP	PB–C01	1	3/4"	SPEC	2	#12	–	–	#12	
	P001	UTILITY POLE	UTILITY TRANSFORMER	1	4"	SPEC	–	–	–	–	–	PER UTILITY REQUIREMENTS
	P002A,B,C,D,E	UTILITY TRANSFORMER	METER/MAIN	5	5"	SPEC	–	–	–	–	–	PER UTILITY REQUIREMENTS
	P003A,B,C,D,E	GENERATOR	ATS	5	4"	SPEC	3	#500	–	–	#4/0	
	P011 A,B	SWITCHBOARD	PUMP 1 VFD	2	3"	SPEC	3	#250	–	–	#2	
	P021 A,B	SWITCHBOARD	PUMP 2 VFD	2	3"	SPEC	3	#250	–	–	#2	
	P031 A,B	SWITCHBOARD	PUMP 3 VFD	2	3"	SPEC	3	#250	–	–	#2	
	P042	SWITCHBOARD	SURGE COMPRESSOR	1	1"	SPEC	3	#10	–	–	#12	
	P101 A,B	PUMP 1 VFD	SUMP TERMINATION PANEL	2	4"	SPEC	3	#250	–	–	#3	VFD CABLE
	P102 A,B	SUMP TERMINATION PANEL	PUMP 1	2	4"	SPEC	2	MFG CABLE	–	–	#1	
	P106	SWITCHBOARD	MV–106	1	1"	SPEC	3	#12	–	–	#12	
	P107	SWITCHBOARD	MV–107	1	1"	SPEC	3	#12	–	–	#12	
	P201 A,B	PUMP 2 VFD	SUMP TERMINATION PANEL	2	4"	SPEC	3	#250	–	–	#3	VFD CABLE
	P202A,B	SUMP TERMINATION PANEL	PUMP 2	2	4"	SPEC	2	MFG CABLE	–	–	#1	
	P301 A,B	PUMP 3 VFD	SUMP TERMINATION PANEL	2	4"	SPEC	3	#250	–	–	#3	VFD CABLE
	P302A,B	SUMP TERMINATION PANEL	PUMP 3	2	4"	SPEC	2	MFG CABLE	–	–	#1	
	P401	SWITCHBOARD	ODOR CONTROL PANEL	1	1"	SPEC	3	#12	–	–	#12	
	X001	CONTROL PANEL	PB–C01	1	1"	SPEC	–	–	–	–	–	PULL ROPE
	X002	PANEL LP	PB–C01	1	1"	SPEC	–	–	–	–	–	PULL ROPE
	X003	CONTROL PANEL	GENERATOR	1	1"	SPEC	–	–	–	–	–	PULL ROPE
	X004	PANEL LP	GENERATOR	1	1"	SPEC	–	–	–	–	–	PULL ROPE
	X005	CONTROL PANEL	SURGE TANK	1	1"	SPEC	–	–	–	–	–	PULL ROPE
	X006	PANEL LP	SURGE TANK	1	1"	SPEC	–	–	–	–	–	PULL ROPE
	X007	CONTROL PANEL	ODOR CONTROL STARTER	1	1"	SPEC	–	–	–	–	–	PULL ROPE
	X011	CONTROL PANEL	PUMP 1 VFD	1	1"	SPEC	–	–	–	–	–	PULL ROPE
	X012	SWITCHBOARD	PUMP 1 VFD	1	1"	SPEC	–	–	–	–	–	PULL ROPE
	X021	CONTROL PANEL	PUMP 2 VFD	1	1"	SPEC	–	–	–	–	–	PULL ROPE
	X022	SWITCHBOARD	PUMP 2 VFD	1	1"	SPEC	–	–	–	–	–	PULL ROPE
	X031	CONTROL PANEL	PUMP 3 VFD	1	1"	SPEC	–	–	–	–	–	PULL ROPE
	X032	SWITCHBOARD	PUMP 3 VFD	1	1"	SPEC	–	–	–	–	–	PULL ROPE
	X052	CONTROL PANEL	INSTRUMENT JUNCTION BOX	1	1"	SPEC	–	–	–	–	–	PULL ROPE
	X053	INSTRUMENT JUNCTION BOX	WETWELL	1	1"	SPEC	–	–	–	–	–	PULL ROPE
	X101	PUMP 1 VFD	SUMP TERMINATION PANEL	1	1"	SPEC	–	–	–	–	–	PULL ROPE
	X102	SUMP TERMINATION PANEL	WETWELL	1	4"	SPEC	–	–	–	–	–	PULL ROPE
	X201	PUMP 2 VFD	SUMP TERMINATION PANEL	1	1"	SPEC	–	–	–	–	–	PULL ROPE
	X202	SUMP TERMINATION PANEL	WETWELL	1	4"	SPEC	–	–	–	–	–	PULL ROPE
	X301	PUMP 3 VFD	SUMP TERMINATION PANEL	1	1"	SPEC	–	–	–	–	–	PULL ROPE
	X302	SUMP TERMINATION PANEL	WETWELL	1	4"	SPEC	–	–	–	–	–	PULL ROPE

NOTES PERTAINING TO CONDUIT SCHEDULE:

1. CONDUIT TYPE "SPEC" IS AS DEFINED IN SPECIFICATIONS SECTION 16110 FOR NON–EXPOSED AND EXPOSED PORTIONS OF CONDUIT RUN.
2. SEE SPECIFICATIONS AND EXPOSED TRANSITION DETAIL OR EQUIPMENT SPECIFIC DETAIL FOR CONDUIT TRANSITION MATERIALS AND METHODS FROM BELOW GROUND TO EXPOSED PORTIONS OF RUN.
3. CONDUITS OVER 15 FT LENGTH (EITHER EMPTY OR WITH CONDUCTORS SIZED LESS THAN #8 AWG), SHALL INCLUDE A POLY PULL STRING. STRING SHALL BE TIED OFF AT EACH END.
4. FITTINGS, CONDULETS, BOXES AND COVERS SHALL MATCH DUTY OF ADJACENT PIPE, SEE SPECIFICATIONS 16110.
5. WIRE SIZING IN TABLE IS BASED ON COPPER CONDUCTORS, THHN INSULATION, WITH TYPE C STRANDING. OTHER CONDUCTOR TYPES, IF ALLOWED OR REQUIRED PER SPECIFICATION, MAY REQUIRE CONDUITS TO BE UPSIZED BY CONTRACTOR AND SUBMITTED FOR APPROVAL.
6. SEE GENERAL NOTES ON LIGHTING AND RECEPTACLE PLAN FOR CONDUIT REQUIREMENTS FOR ELECTRICAL DEVICES WITHOUT CONDUITS SHOWN, CONDUIT NUMBERS, OR NOT LISTED IN SCHEDULE.

REGISTERED PROFESSIONAL ENGINEER
THOMAS P. FRISCH
No. E15761
ELECTRICAL
STATE OF CALIFORNIA
05/27/2020

DESIGN T. FRISCH
DRAWN N. CONANT
CHECKED M. FRISCH
APPROVED M. FISHER

FRISCH ENGINEERING, INC.
CONSULTING ELECTRICAL ENGINEERS
3485 FOLSOM BLVD, UNIT 600
FOLSOM, CA 95630
PH 916 353 1025
WWW.FRISCHENGINEERING.COM
FILE: 17-082 SHEET SCD.DWG
DATE: MAY 28, 2020 TIME: 5:10:54PM

WATERWORKS ENGINEERS
2260 Douglas Blvd. Suite 150 • Roseville, CA 95661 • 916-780-2888

CITY OF MORRO BAY
WATER RECLAMATION FACILITY
LIFT STATON AND OFFSITE PIPELINES

ELECTRICAL
PUMP STATION B
CONDUIT SCHEDULE 2

DATE MAY 2020
PROJECT NUMBER 17-082
DRAWING NUMBER 20-E-09
SHEET NUMBER 207

CONFORMED SET - DEC 2020

P&ID SYMBOLS

ISA SYMBOLS

- FIELD MOUNTED INSTRUMENT
- INSTRUMENT MOUNTED ON DOOR OF LOCAL PANEL, OPERATOR ACCESSIBLE
- INSTRUMENT MOUNTED ON DOOR OF FIELD PANEL, OPERATOR ACCESSIBLE
- INSTRUMENT MOUNTED WITHIN PANEL, OPERATOR INACCESSIBLE
- INSTRUMENT MOUNTED WITHIN FIELD PANEL, OPERATOR INACCESSIBLE
- OPERATION PERFORMED WITH LOGIC OR HARDWIRED DEVICES
- MCE–XX — ASSOCIATED MOTOR CONTROL ELEMENTARY IF APPLICABLE
- UNIT — VISUAL DISPLAY OF PLC ANALOG REGISTER SCALE TO UNITS AS SHOWN
- VISUAL DISPLAY OF PLC ANALOG ALARM REGISTER
- VISUAL DISPLAY OF PLC DIGITAL REGISTER
- VISUAL DISPLAY OF PLC DIGITAL ALARM REGISTER
- TAG DESCRIPTION
- PLC I/O TAG
- PLC DIGITAL INPUT
- PLC DIGITAL OUTPUT
- ANALOG INPUT
- ANALOG OUTPUT
- AUDIBLE ALARM (BUZZER OR HORN)
- LAMP INDICATION COLOR DENOTED BY "X" RED, BLU, GRN, WHT, AMBER
- CONTINUATION TAG FROM ONE AREA TO ANOTHER AREA OF DIFFERENT DRAWINGS "a" TAG IDENTIFIER TO POINT ON DRAWING NUMBER XXXX.
- CONTINUED ON DWG I–X

LINE TYPES

- PRIMARY PROCESS LINE
- SECONDARY PROCESS LINE
- ELECTRICAL SIGNAL LINE (DIGITAL OR ANALOG)
- SOFTWARE OR DATA LINK
- BOUNDARY OF EQUIPMENT PACKAGE SYSTEM
- COMMUNICATION CONNECTION

VALVES

- GATE VALVE
- CHECK VALVE
- PLUG VALVE
- BALL VALVE
- BALL CHECK VALVE
- BUTTERFLY VALVE
- ANGLE VALVE
- NEEDLE VALVE
- RELIEF VALVE
- DIAPHRAGM VALVE
- 3–WAY VALVE
- FLOW CONTROL VALVE
- PINCH VALVE
- CONE VALVE
- ANTISIPHON/BACKPRESSURE VALVE
- SOLENOID VALVE (2–WAY) (S➔M FOR MOTORIZED VALVE)
- SOLENOID VALVE (3–WAY) (S➔M FOR MOTORIZED VALVE)
- SOLENOID VALVE (4–WAY) (S➔M FOR MOTORIZED VALVE)
- PNEUMATIC DIAPHRAGM CONTROL VALVE
- PRESSURE SUSTAINING VALVE
- PRESSURE REGULATING VALVE
- MULTIFUNCTION VALVE
- SLUICE GATE (SG) OR SLIDE GATE (SLG)
- AIR RELIEF VALVE (ARV)
- FLOAT VALVE
- STRAINER
- BACKFLOW PREVENTER
- CALIBRATION VALVE
- CALIBRATION COLUMN
- ROTAMETER
- UNION

ACTUATORS

- MOTORIZED
- SOLENOID
- PNEUMATIC OPERATOR S– SOLENOID – OPEN/CLOSE A– POSITIONER – MODULATING

PUMPS

- CENTRIFUGAL PUMP OR BLOWER
- SUBMERSIBLE SEWAGE PUMP
- VERTICAL TURBINE PUMP OR WELL PUMP
- SUBMERSIBLE WELL PUMP
- GEAR PUMP
- POSITIVE DISPLACEMENT PUMP OR BLOWER
- DIAPHRAGM PUMP
- PERISTALTIC PUMP
- MOTOR

SENSORS

- ORIFICE PLATE
- ULTRASONIC LEVEL TRANSMITTER (FLOW IF OVER FLUME OR WEIR)
- CONDUCTANCE TYPE LEVEL ELEMENTS
- RADAR TYPE LEVEL TRANSMITTER
- GUIDED OPTION
- CAPACITANCE TYPE LEVEL TRANSMITTER

SENSORS

- MAG — MAGNETIC FLOWMETER
- % — DENSITY METER
- ULTRASONIC FLOWMETER
- TURBINE OR PROPELLER METER
- VENTURI TUBE
- THERMAL DISPERSION FLOWMETER OR SWITCH
- PADDLE WHEEL FLOWMETER
- C — CORIOLIS FLOWMETER

MISCELLANEOUS MECHANICAL ITEMS

- PIPE REDUCER
- RUPTURE DISC
- PRESSURE OR VACUUM RELIEF VALVE
- DIAPHRAGM SEAL
- ANNUALAR SEAL
- DRAIN TO WASTE
- MIXER
- F OR F — FILTER
- VENT W/CAP OR SCREEN
- FLEXIBLE HOSE OR TUBING
- SPRAY NOZZLE SYSTEM
- EXPANSION JOINT
- STATIC MIXER
- EJECTOR / EDUCTOR
- HOSE COUPLING
- PULSATION DAMPENER
- OMNI ANTENNA NON–DIRECTIONAL
- YAGI ANTENNA DIRECTIONAL

P&ID ABBREVIATIONS

INSTRUMENTATION SYBMOLS

	FIRST LETTER: MEASURED OR INITIATING VARIABLE	FIRST LETTER: MODIFIER	SUCCEEDING LETTERS: READOUT PASSIVE FUNCTION	SUCCEEDING LETTERS: OUTPUT FUNCTION	SUCCEEDING LETTERS: MODIFIER
A	ANALYSIS		ALARM		
B	BURNER, COMBUSTION		USER'S CHOICE	USER'S CHOICE	USER'S CHOICE
C	CONDUCTIVITY			CONTROLLER	
D	DENSITY	DIFFERENTIAL			
E	VOLTAGE		SENSOR, PRIMARY ELEMENT		
F	FLOW	RATIO			
G	GENERAL		GLASS VIEWING DEVICE		
H	HAND				HIGH, OPENED
I	CURRENT		INDICATING, INDICATOR		
J	POWER	SCAN			
K	TIME, TIME SCHEDULED	TIME RATE OF CHANGE		CONTROL STATION	
L	LEVEL		LIGHT		LOW, CLOSED
M	MOISTURE	MOMENTARY			MIDDLE
N	STATUS		STATUS	USER'S CHOICE	USER'S CHOICE
O	OPERTOR		ORIFICE, RESTRICTION		
P	PRESSURE, VACUUM		POINT (TEST) CONNECTION		
Q	QUANTITY	INTEGRATE, TOTALIZE			
R	RESET		RECORD		
S	SPEED, FREQUENCY	SAFETY		SWITCH	
T	TEMPERATURE			TRANSMITTER	TEST
U	MULTIVARIABLE		MULTIFUNCTION	MULTIFUNCTION	MULTIFUNCTION
V	VIBRATION			VAVE, DAMPER, LOUVER	
W	WEIGHT		WELL		
X	SWITCH	X AXIS	UNCLASSIFIED	UNCLASSIFIED	UNCLASSIFIED
Y	EVENT, STATE OF PRESENCE	Y AXIS		RELAY, COMPUTER, CONVERTER	
Z	POSITION, DIMENSION	Z AXIS		DRIVER, ACTUATOR, UNCLASSIFIED FINAL CONTROL ELEMENT	

P&ID ABBREVIATIONS

SWITCH IDENTIFIER

F/R	FORWARD/REVERSE	OPN	OPEN
HOA	HAND–OFF–AUTO	CLS	CLOSE
HOR	HAND–OFF–REMOTE	SEL	SELECTOR
LOS	LOCK OUT STOP	S/S	START / STOP
L/R	LOCAL / REMOTE	%	PERCENT ADJUSTMENT
MOA	MANUAL–OFF–AUTO		
OCA	OPEN–CLOSE–AUTO		
O/C	OPEN / CLOSE		
O/O	ON / OFF		

REGISTERED PROFESSIONAL ENGINEER — THOMAS P. FRISCH — No. E15761 — ELECTRICAL — STATE OF CALIFORNIA

05/27/2020

DESIGN T. FRISCH
DRAWN N. CONANT
CHECKED M. FRISCH
APPROVED M. FISHER

FRISCH ENGINEERING, INC.
CONSULTING ELECTRICAL ENGINEERS
3485 FOLSOM BLVD, UNIT 600
FOLSOM, CA 95630
PH 916 353 1025
WWW.FRISCHENGINEERING.COM

FILE: I-SHEET.DWG
DATE: MAY 28, 2020 TIME: 11:08:25AM

WATERWORKS ENGINEERS
2260 Douglas Blvd, Suite 150 • Roseville, CA 95661 • 916-780-2888

CITY OF MORRO BAY
WATER RECLAMATION FACILITY
LIFT STATION AND OFFSITE PIPELINES

INSTRUMENTATION
SYMBOLS AND ABBREVIATIONS

DATE MAY 2020
PROJECT NUMBER 17-082
DRAWING NUMBER 00-I-01
SHEET NUMBER 208

CONFORMED SET - DEC 2020

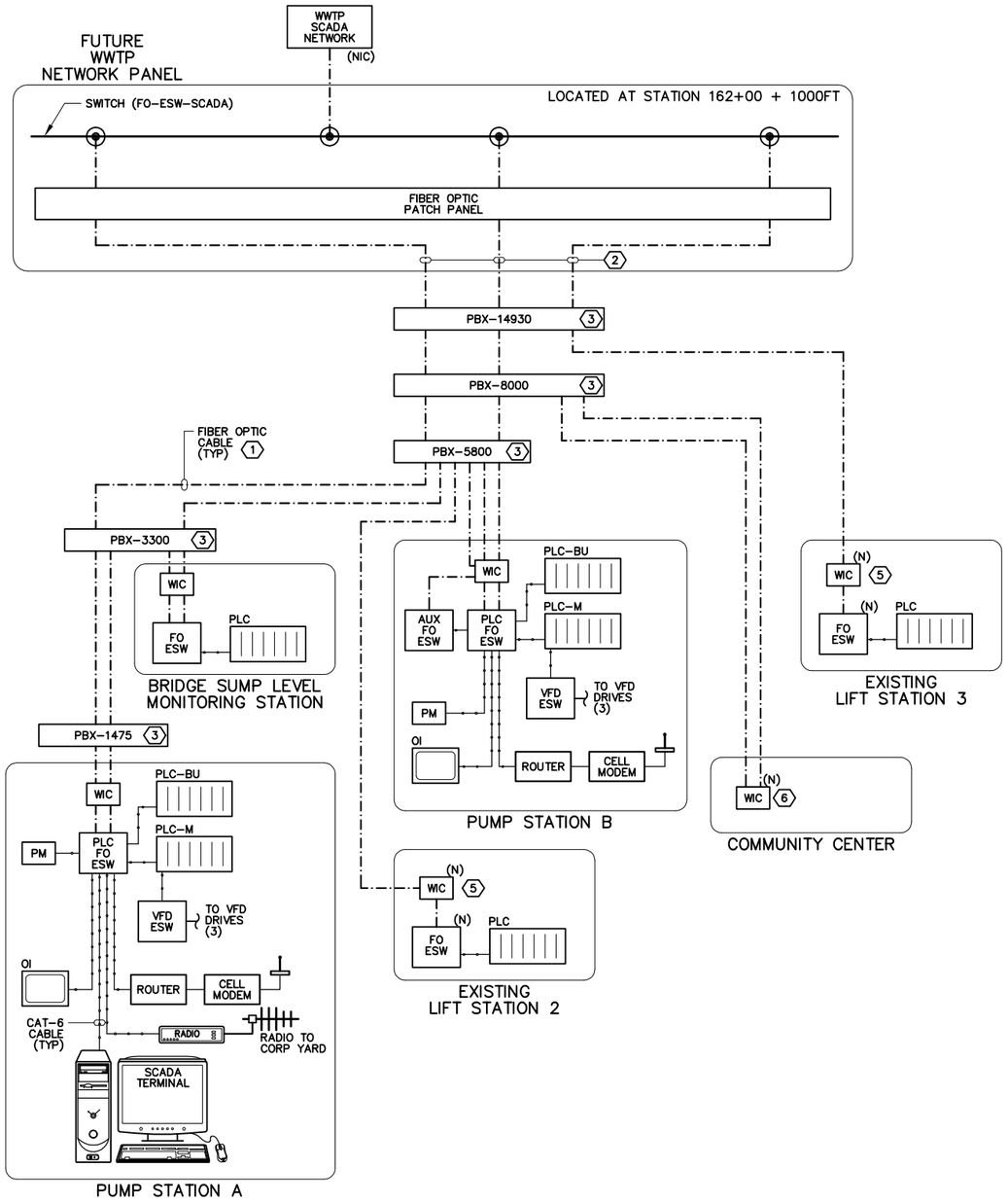

SCADA NETWORK TOPOLOGY

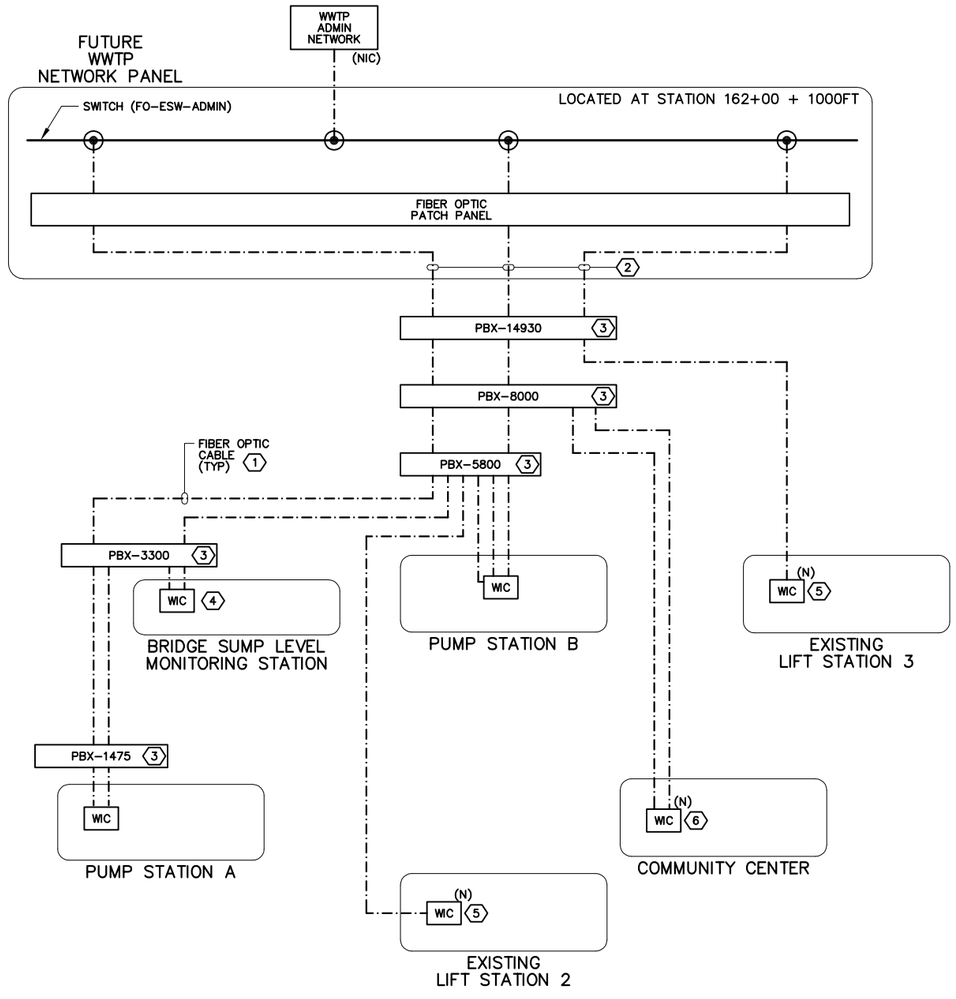

ADMIN NETWORK TOPOLOGY

DRAWING REFERENCED NOTES:

1. FIBER OPTIC CABLE, TYPICAL OF SINGLE CABLE WITH 12 OPTICAL PAIR. ALLOCATE 1 PAIR FOR SCADA NETWORK AND 1 PAIR FOR ADMIN NETWORK. OTHER STRANDS ARE INTENDED TO BE SPARE FOR FUTURE USE.
2. COIL 1000 FT OF FIBER OPTIC CABLE FOR CONNECTION TO FUTURE WWTP.
3. SELECT UNDERGROUND PULLBOXES SHOWN. ONLY PULLBOXES WITH BRANCHES TO NETWORK CONNECTIONS SHOWN ON TOPOLOGY DRAWING. SEE PIPELINE DRAWINGS FOR ALL PULLBOX LOCATIONS.
4. ADMIN NETWORK SHALL PASS THROUGH BRIDGE SUMP LEVEL MONITORING STATION. NO ADMIN NETWORK CONNECTION.
5. FURNISH AND INSTALL FIBER OPTIC WIC AND FIBER OPTIC SWITCH READY FOR NETWORK CONNECTION. CONNECTION BY OTHERS.
6. NETWORK EQUIPMENT INSTALLED BY OTHERS.

LEGEND

SYMBOL	DESCRIPTION	SYMBOL	DESCRIPTION
PLC	COMPACT LOGIX PLC IN CONTROL PANEL (TCP)		FIBER OPTIC GIGABIT CONNECTION
OI	LOCAL SCADA TERMINAL		RJ-45 ETHERNET (CAT6) GIGABIT CONNECTION
ESW	ETHERNET SWITCH		FAST ETHERNET (CAT6) 10/100 CONNECTION
FO ESW	FIBER OPTIC ETHERNET SWITCH	RADIO	RADIO
PBX-XXXX	UNDERGROUND PULL BOX	PM	POWER MONITOR
		WIC	FIBER OPTIC WIC

REGISTERED PROFESSIONAL ENGINEER THOMAS P. FRISCH No. E15761 ELECTRICAL STATE OF CALIFORNIA
05/27/2020

DESIGN T. FRISCH
DRAWN N. CONANT
CHECKED M. FRISCH
APPROVED M. FISHER

FRISCH ENGINEERING, INC.
CONSULTING ELECTRICAL ENGINEERS
13405 FOLSOM BLVD, UNIT 600
FOLSOM, CA 95630
PH 916 353 1025
WWW.FRISCHENGINEERING.COM
FILE: 1805H-100I02.DWG
DATE: JUL 29, 2020 TIME: 11:19:14AM

WATERWORKS ENGINEERS
2260 Douglas Blvd, Suite 150 • Roseville, CA 95661 • 916-780-2888

CITY OF MORRO BAY
WATER RECLAMATION FACILITY
LIFT STATON AND OFFSITE PIPELINES

INSTRUMENTATION
NETWORK TOPOLOGY

DATE MAY 2020
PROJECT NUMBER 17-082
DRAWING NUMBER 00-I-02
SHEET NUMBER 209

CONFORMED SET - DEC 2020

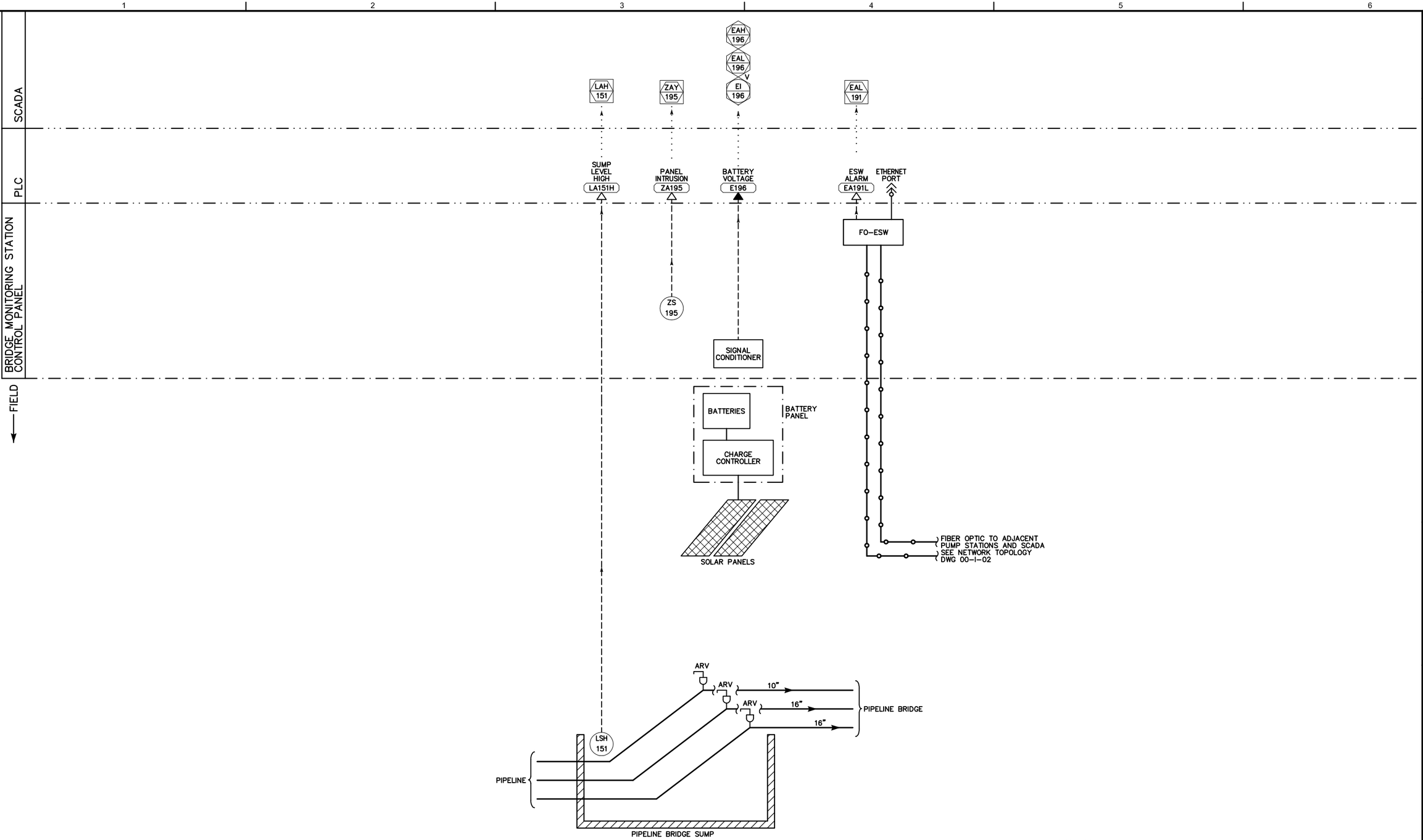

PIPELINE BRIDGE SUMP LEVEL MONITORING STATION P&ID

NOTES:

ADD THE PREFIX 05 TO COMPLETE INSTRUMENT OR EQUIPMENT TAG REFFERENCE ON THIS SHEET.
EXAMPLE: P-05151 FOR LEVEL SWITCH

REGISTERED PROFESSIONAL ENGINEER
THOMAS P. FRISCH
No. E15761
ELECTRICAL
STATE OF CALIFORNIA
05/27/2020

DESIGN T. FRISCH
DRAWN N. CONANT
CHECKED M. FRISCH
APPROVED M. FISHER

FRISCH ENGINEERING, INC.
CONSULTING ELECTRICAL ENGINEERS
13405 FOLSOM BLVD, UNIT 600
FOLSOM, CA 95630
PH 916 353 1025
WWW.FRISCHENGINEERING.COM
FILE: 1805H-I05I01.DWG
DATE: MAY 29, 2020 TIME: 2:12:20PM

WATERWORKS ENGINEERS
2260 Douglas Blvd, Suite 150 • Roseville, CA 95661 • 916-780-2888

CITY OF MORRO BAY
WATER RECLAMATION FACILITY
LIFT STATON AND OFFSITE PIPELINES

INSTRUMENTATION
PIPELINE BRIDGE
SUMP LEVEL MONITORNING P&ID

DATE MAY 2020
PROJECT NUMBER 17-082
DRAWING NUMBER 05-I-01
SHEET NUMBER 210

CONFORMED SET - DEC 2020

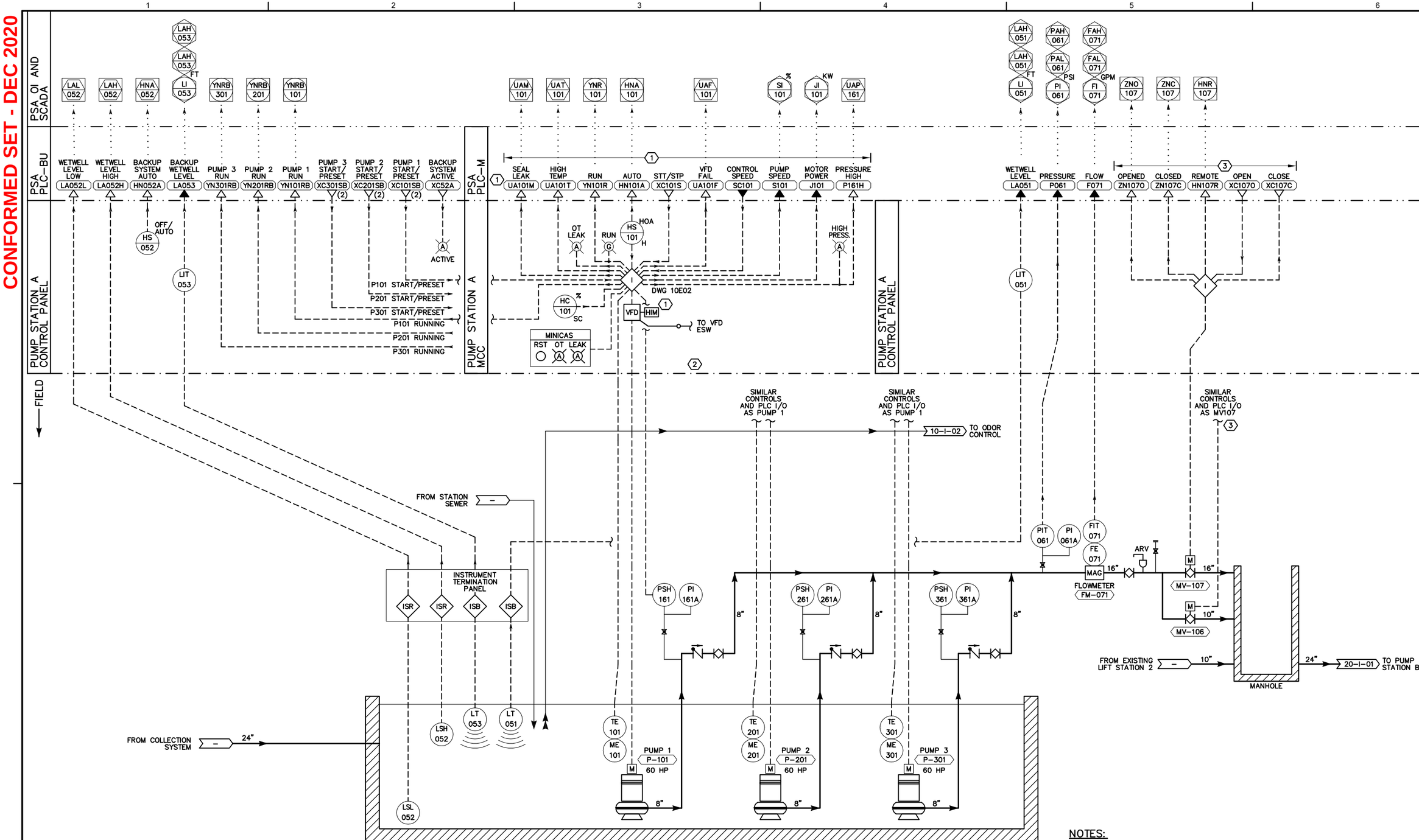

NOTES:

ADD THE PREFIX 10 TO COMPLETE INSTRUMENT OR EQUIPMENT TAG REFFERENCE ON THIS SHEET. EXAMPLE: P-10101 FOR PUMP 1

NOTES REFERENCED IN DRAWING:

1. TYPICAL I/O CONTROLS AND VFDS FOR ALL PUMPS
2. LOCATED IN REMOTE PANEL
3. TYPICAL I/O CONTROLS FOR ALL MOTORIZED VALVES.

PUMP STATION A P&ID

REGISTERED PROFESSIONAL ENGINEER THOMAS P. FRISCH No. E15761 ELECTRICAL STATE OF CALIFORNIA

05/27/2020

DESIGN T. FRISCH
DRAWN N. CONANT
CHECKED M. FRISCH
APPROVED M. FISHER

FRISCH ENGINEERING, INC.
CONSULTING ELECTRICAL ENGINEERS
13405 FOLSOM BLVD, UNIT 600
FOLSOM, CA 95630
PH 916 353 1025
WWW.FRISCHENGINEERING.COM
FILE: 1805H-I1001.DWG
DATE: MAY 29, 2020 TIME: 2:12:28PM

WATERWORKS ENGINEERS
2260 Douglas Blvd, Suite 150 • Roseville, CA 95661 • 916-780-2888

CITY OF MORRO BAY
WATER RECLAMATION FACILITY
LIFT STATON AND OFFSITE PIPELINES

INSTRUMENTATION
PUMP STATION A P&ID

DATE MAY 2020
PROJECT NUMBER 17-082
DRAWING NUMBER 10-I-01
SHEET NUMBER 211

CONFORMED SET - DEC 2020

PSA OI AND SCADA

PSA PLC–M

PUMP STATION A CONTROL PANEL

FIELD

HNR 401 — FAN IN REMOTE HN401R

YNR 401 — FAN RUNNING YN401R

UAF 401 — FAN FAULT UA401F

LAL 401 — TANK LEVEL LOW LA401L

ZAY 096 — VEHICLE GATE INTRUSION ZA096A

ZAY 093 — BUILDING INTRUSION ZA093A

EAL 095A — 120 V POWER FAIL EA095AL

EAL 095B — UPS POWER FAIL EA095BL

SAA 098 — SMOKE ALARM SA098A

EAL 091B — VFD ESW ALARM EA091LB — ETHERNET PORT

EAL 091A — PLC ESW ALARM EA091LA — ETHERNET PORT

EAL 99 — 480V POWER FAIL EA99L

LAL 03 — LOW FUEL LA03L

UAA 03 — GEN. ALARM UA03A

YNR 03 — GEN. RUN YN03R

YNR 01 — EMERG POSITION YN01E

YNN 01 — NORMAL POSITION YN01N

ENR 01 — EMERG SOURCE AVAIL EN01E

ENN 01 — NORMAL SOURCE AVAIL EN01N

ESL 095A — CR–PF

ESL 095B — CR–UF

ESL 99 — VMR

ZS 096A — VEHICLE GATE 1

SMOKE SS 098A

ZS 093A, ZS 093B — ELECTRICAL ROOM

TO VFD DRIVES (3) — VFD ESW

PLC FO–ESW

ROUTER

CELL MODEM

PUMP STATION A SWITCHBOARD

POWER MONITOR

AUTOMATIC TRANSFER SWITCH

START

STANDBY GENERATOR GEN03

FIBER OPTIC TO ADJACENT PUMP STATION AND SCADA SEE NETWORK TOPOLOGY DWG 00–I–02

E (480V) — ODOR CONTROL PANEL

M

FROM WETWELL 10–I–02

ODOR CONTROL BLOWER B–401

BIO FILTER

ODOR CONTROL SYSTEM P&ID

INTRUSION ALARM P&ID

COMMUNICATIONS P&ID

BACK–UP POWER P&ID

NOTES:

ADD THE PREFIX 10 TO COMPLETE INSTRUMENT OR EQUIPMENT TAG REFFERENCE ON THIS SHEET.
EXAMPLE: P–10401 FOR ODOR CONTROL

REGISTERED PROFESSIONAL ENGINEER — THOMAS P. FRISCH — No. E15761 — ELECTRICAL — STATE OF CALIFORNIA

05/27/2020

DESIGN T. FRISCH
DRAWN N. CONANT
CHECKED M. FRISCH
APPROVED M. FISHER

FRISCH ENGINEERING, INC.
CONSULTING ELECTRICAL ENGINEERS
3485 FOLSOM BLVD, UNIT 600
CHICO, CA 95834
PH 916 353 1025
WWW.FRISCHENGINEERING.COM

FILE: 10-I-02.DWG
DATE: MAY 29, 2020 TIME: 2:11 2:36PM

WATERWORKS ENGINEERS
2260 Douglas Blvd. Suite 150 • Roseville, CA 95661 • 916-780-2888

CITY OF MORRO BAY
WATER RECLAMATION FACILITY
LIFT STATION AND OFFSITE PIPELINES

INSTRUMENTATION
PUMP STATION A
MISCELLANEOUS P&ID

DATE MAY 2020
PROJECT NUMBER 17-082
DRAWING NUMBER 10-I-02
SHEET NUMBER 212

CONFORMED SET - DEC 2020

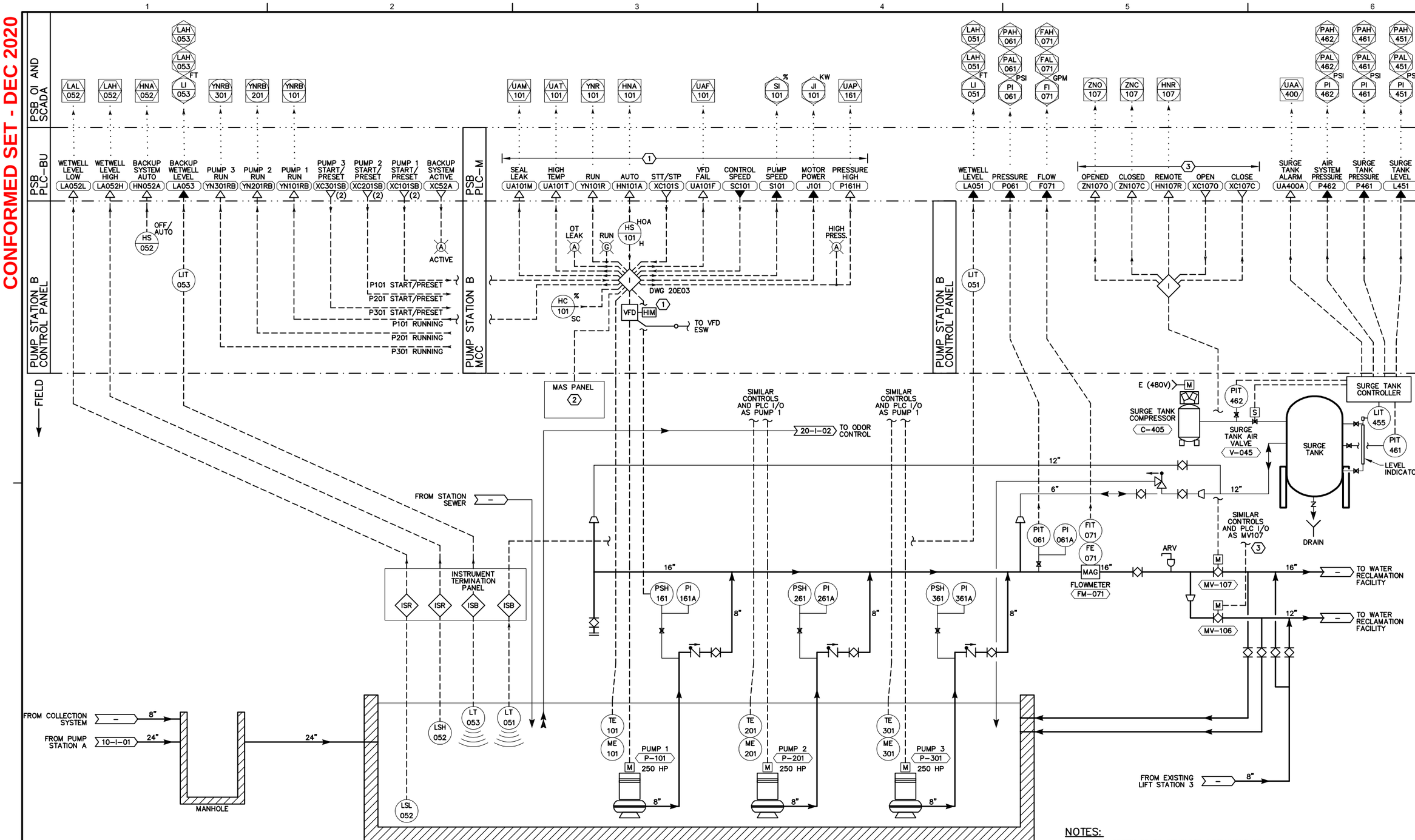

NOTES:

ADD THE PREFIX 20 TO COMPLETE INSTRUMENT OR EQUIPMENT TAG REFFERENCE ON THIS SHEET. EXAMPLE: P-20101 FOR PUMP 1

NOTES REFERENCED IN DRAWING:

1. TYPICAL I/O CONTROLS AND VFDS FOR ALL PUMPS
2. REMOTE MAS PANEL TYPICAL FOR ALL PUMPS.
3. TYPICAL I/O CONTROLS FOR ALL MOTORIZED VALVES.

PUMP STATION B P&ID

REGISTERED PROFESSIONAL ENGINEER THOMAS P. FRISCH No. E15761 ELECTRICAL STATE OF CALIFORNIA

05/27/2020

DESIGN T. FRISCH
DRAWN N. CONANT
CHECKED M. FRISCH
APPROVED M. FISHER

FRISCH ENGINEERING, INC.
CONSULTING ELECTRICAL ENGINEERS
13405 FOLSOM BLVD, UNIT 600
FOLSOM, CA 95630
PH 916 353 1025
WWW.FRISCHENGINEERING.COM
FILE: 1805H-I20101.DWG
DATE: JUN 03, 2020 TIME: 10:30:25AM

WATERWORKS ENGINEERS
2260 Douglas Blvd, Suite 150 • Roseville, CA 95661 • 916-780-2888

CITY OF MORRO BAY
WATER RECLAMATION FACILITY
LIFT STATON AND OFFSITE PIPELINES

INSTRUMENTATION
PUMP STATION B P&ID

DATE MAY 2020
PROJECT NUMBER 17-082
DRAWING NUMBER 20-I-01
SHEET NUMBER 213

CONFORMED SET - DEC 2020

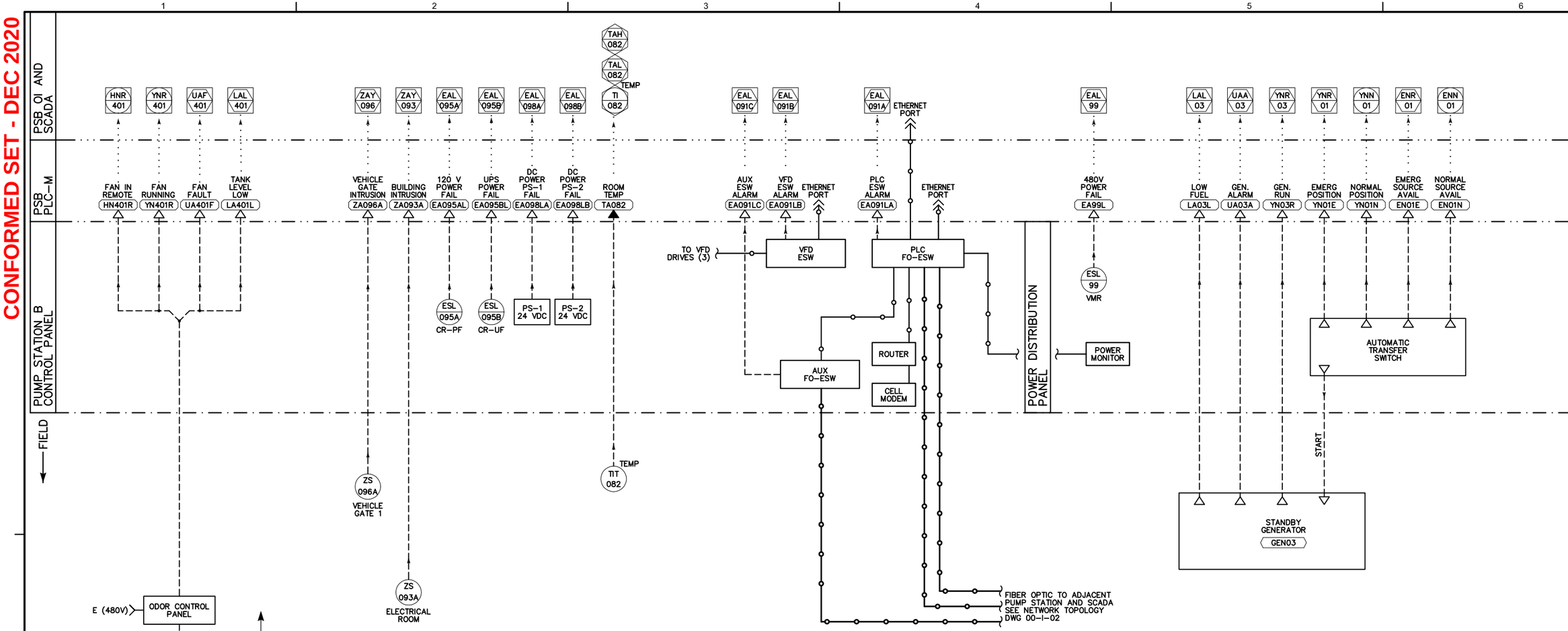

INTRUSION ALARM P&ID

COMMUNICATIONS P&ID

BACK-UP POWER P&ID

ODOR CONTROL SYSTEM P&ID

NOTES:

ADD THE PREFIX 20 TO COMPLETE INSTRUMENT OR EQUIPMENT TAG REFFERENCE ON THIS SHEET. EXAMPLE: P-20401 FOR ODOR CONTROL

NOTES REFERENCED IN DRAWING:

1 TYPICAL I/O CONTROLS FOR ALL HVAC UNITS

REGISTERED PROFESSIONAL ENGINEER THOMAS P. FRISCH No. E15761 ELECTRICAL STATE OF CALIFORNIA

05/27/2020

DESIGN T. FRISCH
DRAWN N. CONANT
CHECKED M. FRISCH
APPROVED M. FISHER

FRISCH ENGINEERING, INC.
CONSULTING ELECTRICAL ENGINEERS
13405 FOLSOM BLVD, UNIT 600
FOLSOM, CA 95630
PH 916 353 1025
WWW.FRISCHENGINEERING.COM
FILE: 1805H-I20I02.DWG
DATE: MAY 29, 2020 TIME: 2:12:06PM

WATERWORKS ENGINEERS
2260 Douglas Blvd, Suite 150 • Roseville, CA 95661 • 916-780-2888

CITY OF MORRO BAY
WATER RECLAMATION FACILITY
LIFT STATON AND OFFSITE PIPELINES

INSTRUMENTATION
PUMP STATION B
MISCELLANEOUS P&ID

DATE MAY 2020
PROJECT NUMBER 17-082
DRAWING NUMBER 20-I-02
SHEET NUMBER 214

CONFORMED SET - DEC 2020

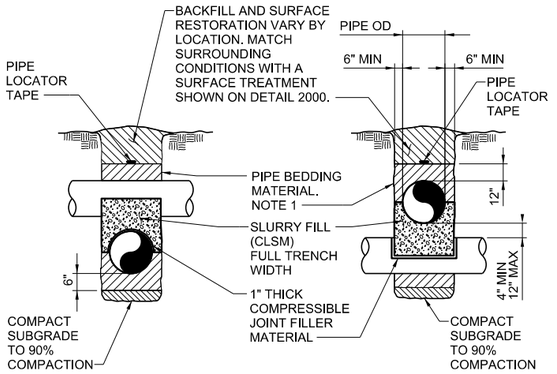

NOTES:

1. PIPE BEDDING SHALL BE GRANULAR BEDDING FOR ALL DUCTILE IRON OR STEEL PIPE AND SAND FOR ALL OTHER PIPE.COMPACT TO 90% RELATIVE COMPACTION. ALTERNATELY, SLURRY FILL MAY BE USED FOR PIPE BEDDING. TAKE PRECAUTIONS TO PREVENT PIPE FLOATING.
2. COMPACT ALL TRENCH BACK FILL (COMMON FILL AND SELECT FILL) TO 90% COMPACTION MORE THAN 2-FEET BELOW GRADE; 95% COMPACTION LESS THAN 2-FEET BELOW GRADE.
3. PROVIDE MINIMUM 3-FEET OF COVER OVER ALL BURIED PIPELINES, UNLESS OTHERWISE NOTED.

VERTICAL PROXIMITY PIPE CROSSING

NTS

2055

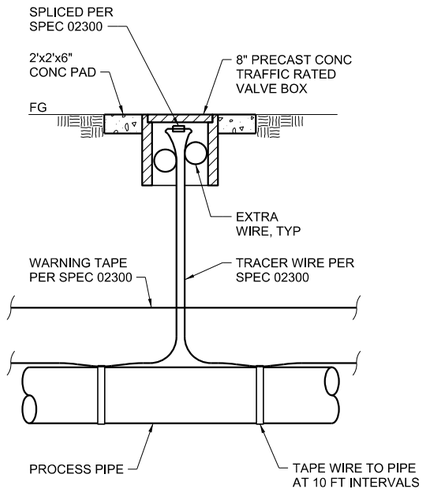

TRACER WIRE WITH TEST STATION

NTS

2060

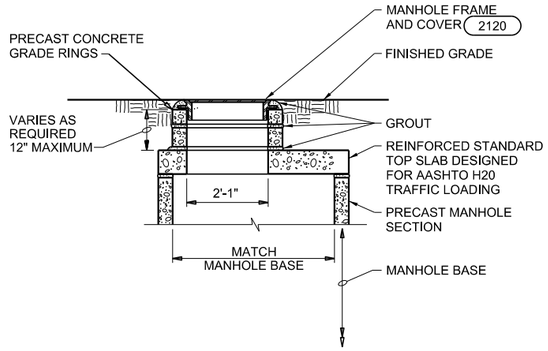

FLAT TOP MANHOLE

NTS

2112

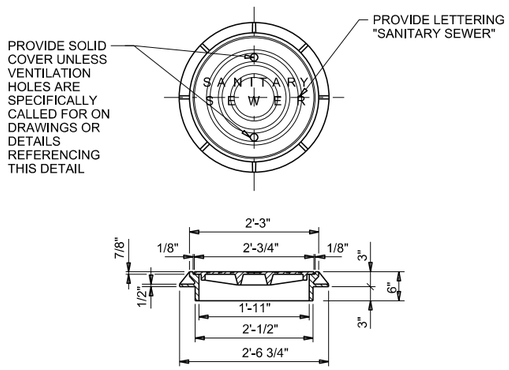

NOTES:

1. FRAME AND COVER SHALL BE CAST IRON.
2. FRAME AND COVER SHALL BE RATED FOR AASHTO H-20 TRAFFIC LOADS.

STANDARD MANHOLE FRAME AND COVER

NTS

2120

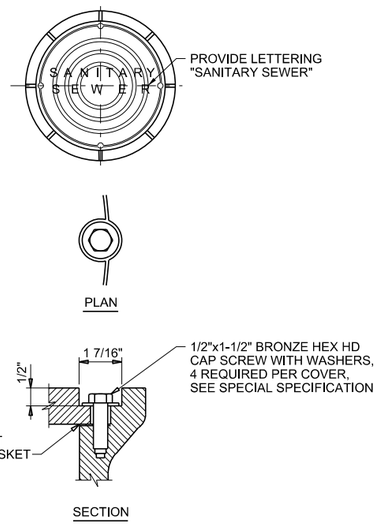

NOTES:

1. WATERTIGHT MANHOLE FRAME AND COVER SIMILAR TO STANDARD MANHOLE FRAME AND COVER (2120), EXCEPT AS SHOWN.
2. NO HOLES SHALL BE ALLOWED IN WATERTIGHT MANHOLE COVER.

WATER TIGHT MANHOLE FRAME AND COVER

NTS

2121

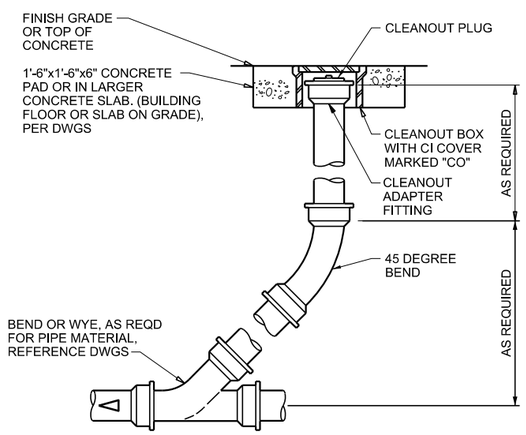

DRAIN LINE CLEANOUT

NTS

2130

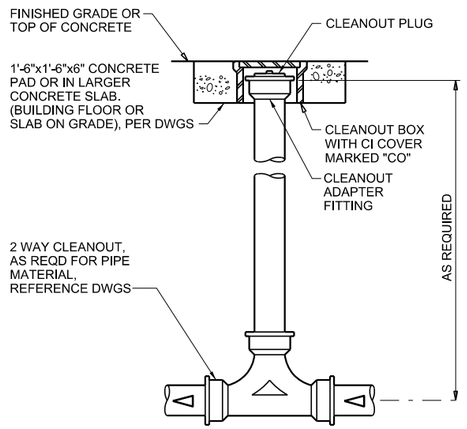

TWO WAY DRAIN LINE CLEANOUT

NTS

2132

DESIGNED K ALACOM
DRAWN J MARTIN
CHECKED K ALACOM
APPROVED M FISHER

WATERWORKS ENGINEERS
2290 Douglas Blvd., Suite 105 • Roseville, CA 95661 • 916-780-2888

CITY OF MORRO BAY
WATER RECLAMATION FACILITY
LIFT STATIONS AND OFFSITE PIPELINES

STANDARD DETAILS

STANDARD DETAILS

REGISTERED PROFESSIONAL ENGINEER
KRISTINA P. ALACOM
No. C70952
CIVIL
STATE OF CALIFORNIA
05-29-2020

DATE
MAY 2020
PROJECT NUMBER
17-082
DRAWING NUMBER
SD-1
SHEET NUMBER 215

CONFORMED SET - DEC 2020

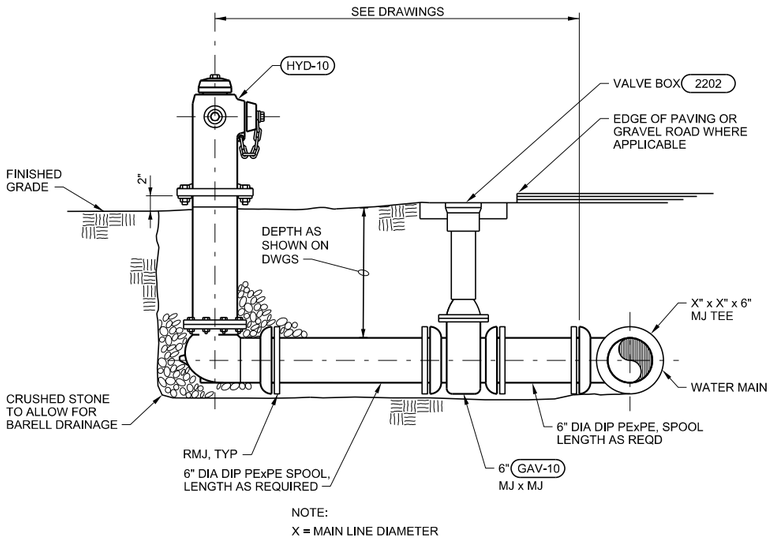

FIRE HYDRANT ASSEMBLY
NTS

2200

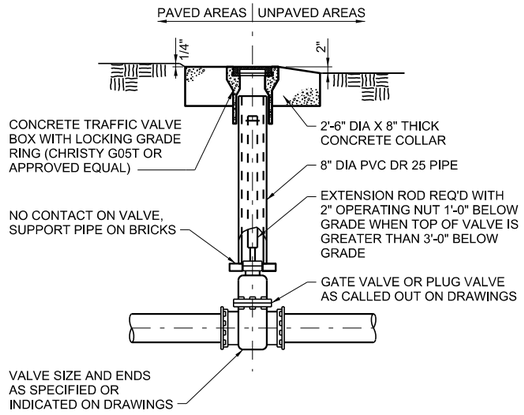

BURIED GATE OR PLUG VALVE BOX, TYPE 2
NTS

2203

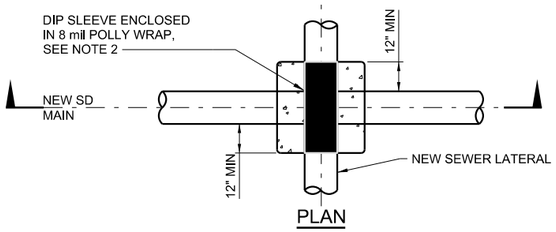

PLAN

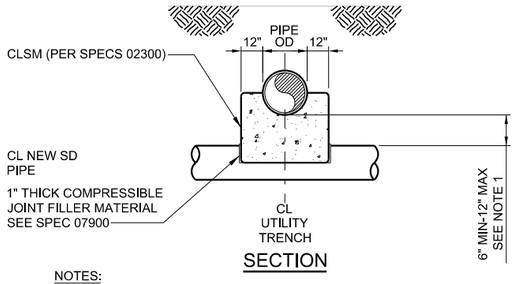

SECTION

NOTES:

1. WHERE VERTICAL CLEARANCE IS LESS THAN 12", UTILIZE DIP SLEEVE.
2. UTILIZE NEXT NORMAL SLEEVE SIZE OVER NORMAL SS SIZE.
3. WHERE VERTICAL CLEARANCE IS LESS THAN 6", CONTACT CITY REP FOR AUTHORIZATION TO UTILIZE THIS DETAIL.

UTILITY CROSSING
NTS

2210

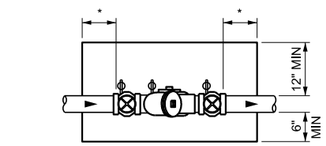

* TO BE OF ADEQUATE DISTANCE TO ALLOW ACCESS FOR MAINTENANCE, TESTING OR REMOVAL OF BACKFLOW DEVICE.

MINIMUM CLEARANCES
(SIZES 3/4"-2")

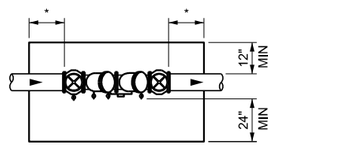

* TO BE OF ADEQUATE DISTANCE TO ALLOW ACCESS FOR MAINTENANCE, TESTING OR REMOVAL OF BACKFLOW DEVICE.

MINIMUM CLEARANCES
(SIZES 3" AND LARGER)

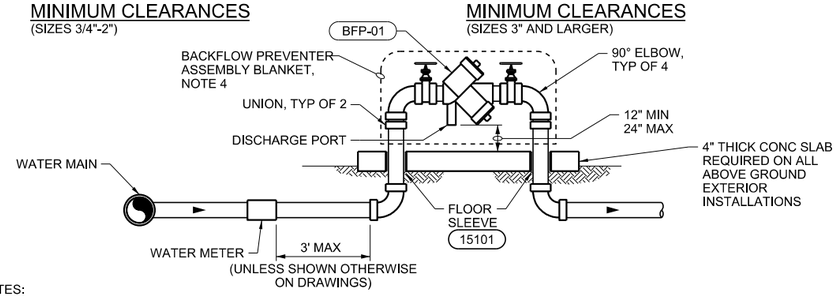

NOTES:

1. ALL BACKFLOW DEVICES SHALL BE INSPECTED AND TESTED UPON INITIAL INSTALLATION BY A CERTIFIED BACKFLOW TESTER (AWWA OR ABPA).
2. NO OUTLET, TAP, TEE OR CONNECTION BETWEEN THE WATER MAIN AND BACKFLOW PREVENTOR IS ALLOWED.
3. ALL ABOVE GROUND PIPING INSTALLATIONS, 2" AND SMALLER SHALLBE RIGID COPPER OR BRASS PIPE AND ALL 3" AND LARGER SHALL BE DUCTILE IRON PIPE WITH FLANGED FITTINGS.
4. PROVIDE VINYL COATED OR POLYMERIC RESIN COATED POLYESTER BLANKET SPECIFICALLY DESIGNED FOR BACKFLOW PREVENTER ASSEMBLIES. MINIMUM R-VALUE OF R-30. BACKFLOW BLANKET, OR EQUAL.

BACKFLOW PREVENTER ASSEMBLY (LESS THAN 4")
NTS

2245

DESIGNED K ALACOM
DRAWN J MARTIN
CHECKED K ALACOM
APPROVED M FISHER

WATERWORKS ENGINEERS
2290 Douglas Blvd., Suite 105 • Roseville, CA 95661 • 916-780-2888

CITY OF MORRO BAY
WATER RECLAMATION FACILITY
LIFT STATIONS AND OFFSITE PIPELINES

STANDARD DETAILS

STANDARD DETAILS



DATE
MAY 2020
PROJECT NUMBER
17-082
DRAWING NUMBER
SD-2
SHEET NUMBER 216

CONFORMED SET - DEC 2020

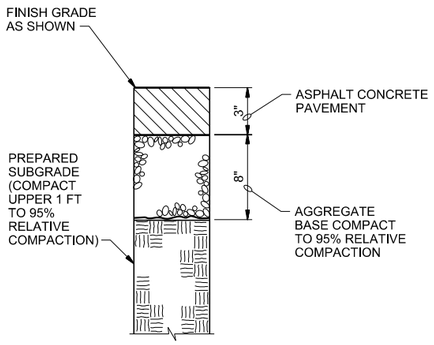

ASPHALT CONCRETE PAVEMENT 2501

NTS

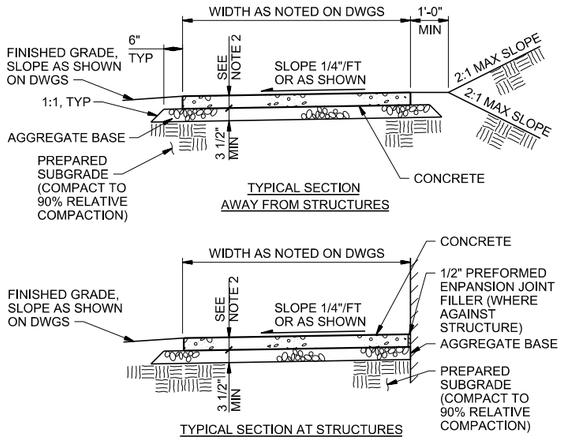

NOTES:

1. SIDEWALKS 8 FEET AND WIDER SHALL HAVE A LONGITUDINAL CONTRACTION JOINT AT THE MIDPOINT. PROVIDE LATERAL CONTRACTION JOINTS AT EQUAL SPACING, NO MORE THAN 5'-0" BETWEEN JOINTS.
2. CONCRETE DEPTH FOR STANDARD SIDEWALKS SHALL BE NOMINAL 3 1/2" MINIMUM, THICKNESS IN DRIVEWAY SHALL BE 5 1/2" MINIMUM.

CONCRETE SIDEWALK 2503

NTS

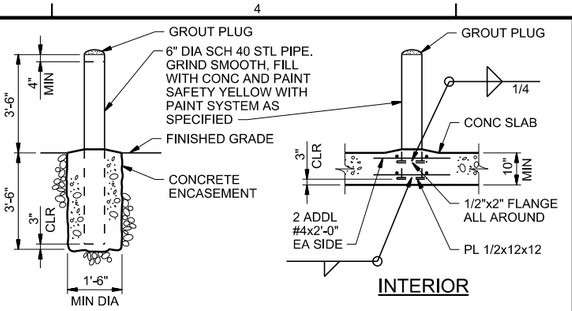

EXTERIOR

INTERIOR

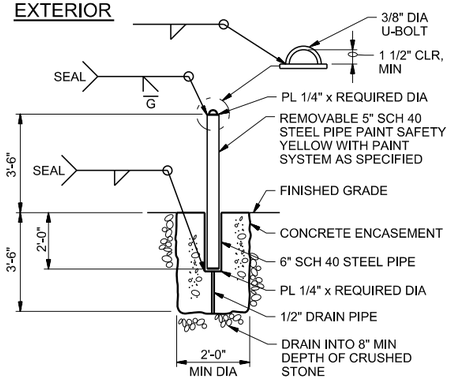

REMOVABLE

GUARD POST 2600

NTS

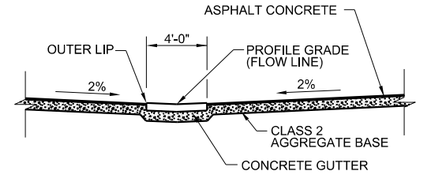

TYP. CROSS SECTION

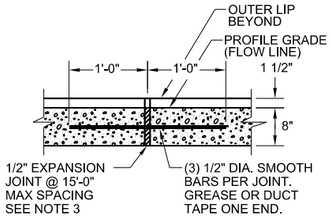

EXPANSION JOINT DETAIL

NOTES

1. ALL WORK AND MATERIALS SHALL CONFORM TO THE PROJECT SPECIFICATIONS.
2. SURFACING AND BASE THICKNESS SHALL BE DETERMINED IN ACCORDANCE WITH PROJECT SPECIFICATIONS OR AS DIRECTED BY THE ENGINEER.
3. 1/2-INCH, PRE-MOLDED EXPANSION JOINT MATERIAL SHALL BE HELD FIRMLY IN PLACE PRIOR TO PLACING CONCRETE.

TYPICAL CONCRETE SWALE 2720

NTS

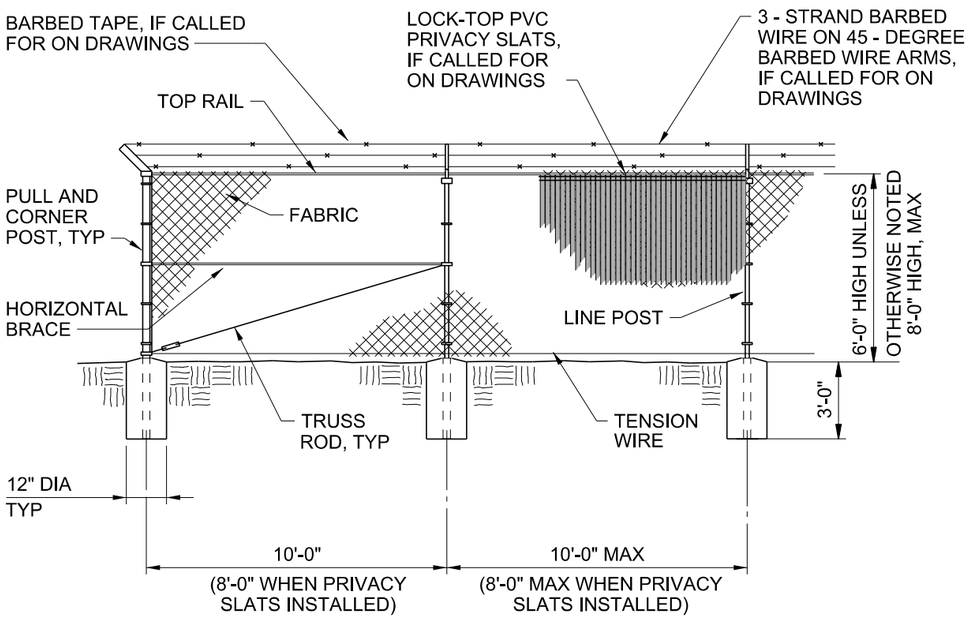

CHAINLINK FENCE 2800

NTS

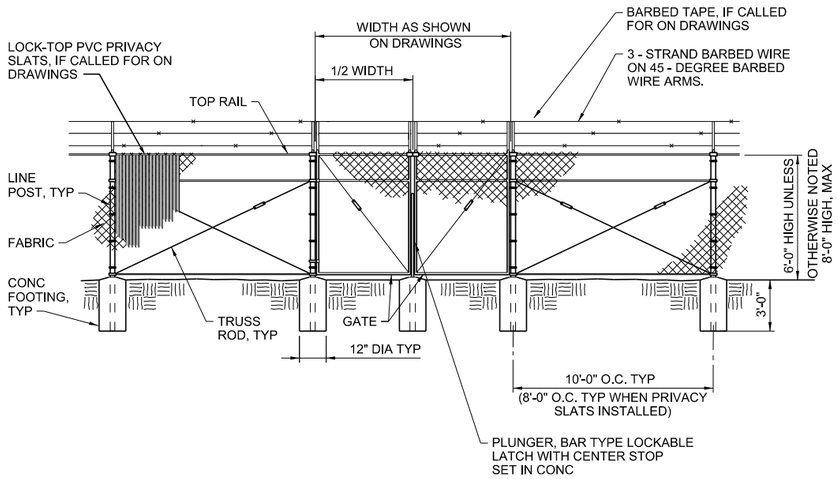

CHAINLINK DOUBLE-LEAF GATE 2801

NTS

REGISTERED PROFESSIONAL ENGINEER ANDREW L. LEMAN No. C88058 CIVIL STATE OF CALIFORNIA
05-29-2020

DESIGNED K ALACOM
DRAWN J MARTIN
CHECKED K ALACOM
APPROVED M FISHER

WATERWORKS ENGINEERS
2290 Douglas Blvd., Suite 105 • Roseville, CA 95661 • 916-780-2888

CITY OF MORRO BAY
WATER RECLAMATION FACILITY
LIFT STATIONS AND OFFSITE PIPELINES

STANDARD DETAILS
STANDARD DETAILS

DATE MAY 2020
PROJECT NUMBER 17-082
DRAWING NUMBER SD-3
SHEET NUMBER 217

FILENAME: 1782D-SD801.dgn PLOT DATE: 5/23/2020 10:28:26 AM

CONFORMED SET - DEC 2020

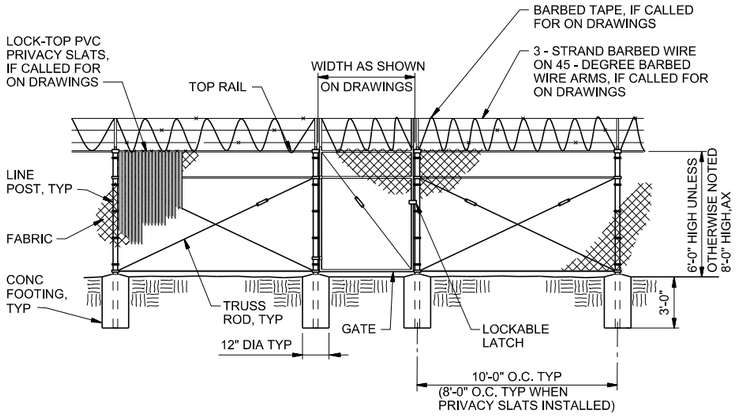

CHAINLINK SINGLE-LEAF GATE

NTS

2802

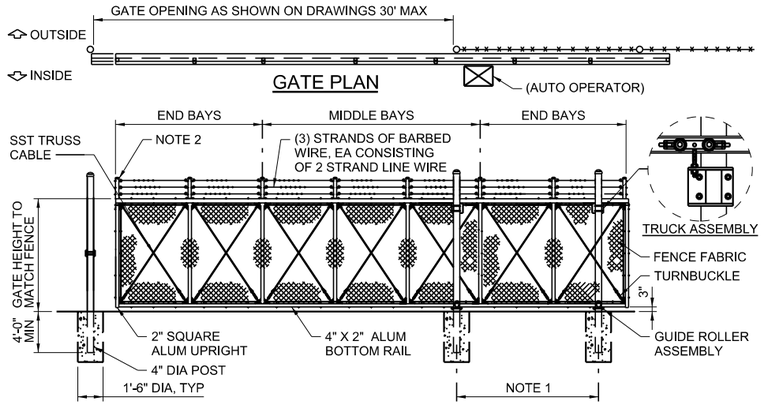

GATE PLAN

GATE ELEVATION - 7 BAYS SHOWN
(RH OPENING SHOWN - LH OR RH CAPABLE)

NOTES:

1. GATE MOUNTING POSTS SHALL BE SPACED IN ACCORDANCE WITH MANUFACTURE'S GUIDLINES.
2. SMOOTH LEADING EDGE. (NO PROTRUSIONS EXCEEDING .05" PER ASTM F2200).

CANTILIEVER GATE FOR CHAINLINK FENCE

NTS

2807

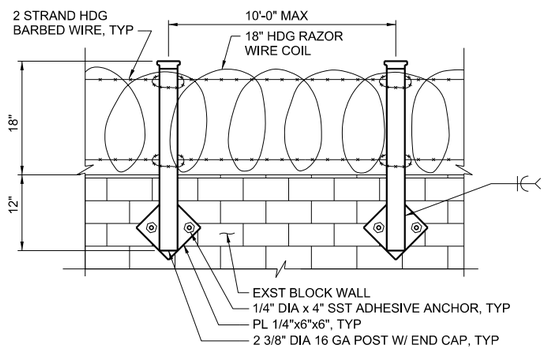

NOTES:

1. HOT DIP GALVANIZE POST BRACKET AFTER FABRICATION.

RAZOR WIRE ON BLOCK WALL

NTS

2808

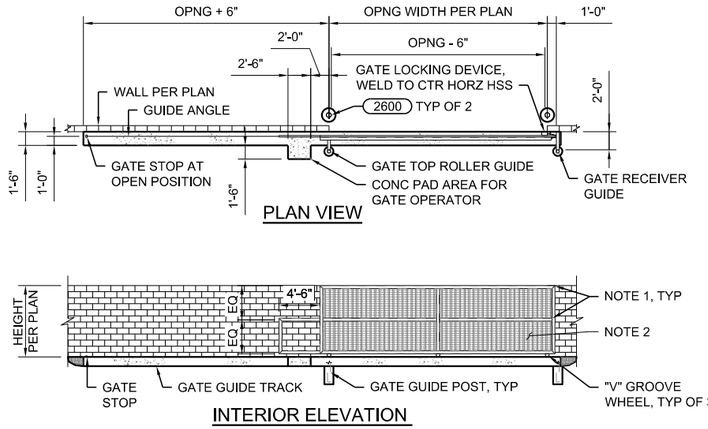

NOTES:

1. HSS2x4x1/4 FRAME, MITER CORNERS AND FULLY WELD ALL JOINTS. COORDINATE GATE WIDTH WITH HARDWARE TO PROPERLY FIT IN THE ROUGH OPENING. GRIND SMOOTH ALL SHARP CORNERS.
2. 1 1/2" DEEP 18 GAUGE PERFORATED / CORRUGATED METAL PANEL WITH 1/4" DIAMETER PERFORATIONS AT 1/2" CENTERS. WELD TO SUPPORTING FRAME AS SHOWN IN THE DETAILS.
3. PAINT ENTIRE GATE ASSEMBLY AFTER FABRICATION USING SYSTEM 300, COLOR SELECTED BY OWNER.
4. FOR ADDITIONAL CONNECTION DETAILS SEE (2819).

STEEL ROLLING GATE

NTS

1 OF 3

2815

REGISTERED PROFESSIONAL ENGINEER
KRISTINA P. ALACOM
No. C70952
CIVIL
STATE OF CALIFORNIA
05-29-2020

DESIGNED K ALACOM
DRAWN J MARTIN
CHECKED K ALACOM
APPROVED M FISHER

WATERWORKS ENGINEERS
2290 Douglas Blvd., Suite 105 • Roseville, CA 95661 • 916-780-2888

CITY OF MORRO BAY
WATER RECLAMATION FACILITY
LIFT STATIONS AND OFFSITE PIPELINES

STANDARD DETAILS

STANDARD DETAILS

DATE MAY 2020
PROJECT NUMBER 17-082
DRAWING NUMBER SD-4
SHEET NUMBER 218

CONFORMED SET - DEC 2020

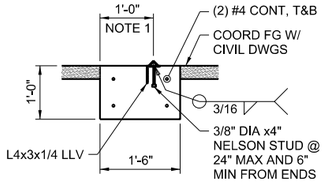

NOTES:

1. COORDINATE WHEEL TRACK LOCATION W/ GATE MFR FOR PRECISE ASSEMBLY. CONSTRUCT TRACK W/ L1 1/2x1 1/2x1/4 ANGLE WELDED TO L4x3, BUTT WELD AND GRIND SMOOTH ALL JOINTS.

GATE GUIDE TRACK

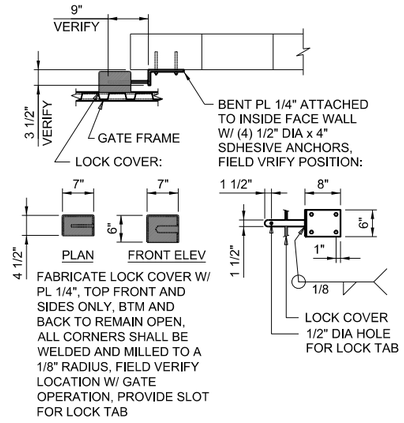

FABRICATE LOCK COVER W/ PL 1/4", TOP FRONT AND SIDES ONLY, BTM AND BACK TO REMAIN OPEN, ALL CORNERS SHALL BE WELDED AND MILLED TO A 1/8" RADIUS, FIELD VERIFY LOCATION W/ GATE OPERATION, PROVIDE SLOT FOR LOCK TAB

GATE LOCKING DEVICE

STEEL ROLLING GATE
NTS

2 OF 3 | 2815

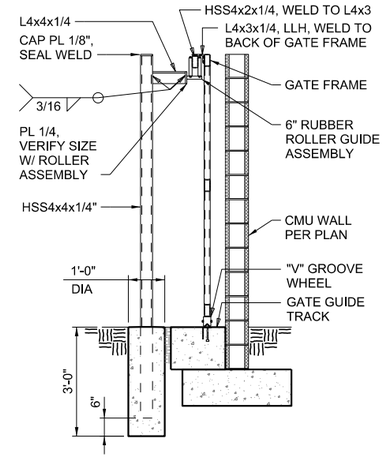

GATE TOP ROLLER GUIDE

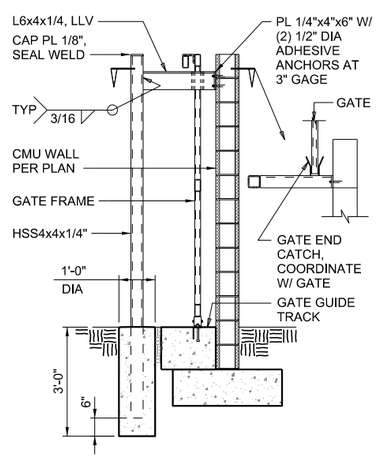

GATE RECEIVER GUIDE

STEEL ROLLING GATE
NTS

3 OF 3 | 2815

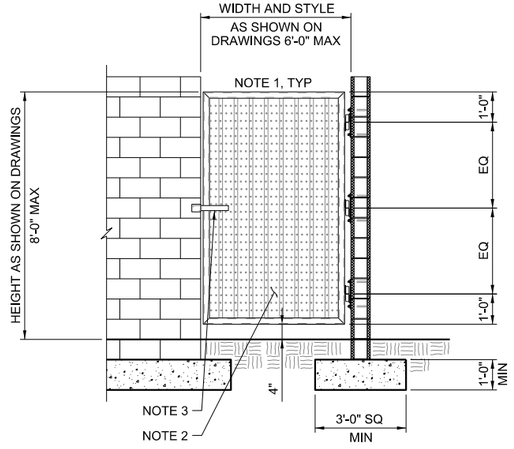

ELEVATION

NOTES:

1. HSS2 1/2x2 1/2x3/16 FRAME, MITER CORNERS AND FULLY WELD ALL JOINTS. COORDINATE GATE WIDTH WITH HARDWARE TO PROPERLY FIT IN THE ROUGH OPENING. GRIND SMOOTH ALL SHARP CORNERS.
2. 1 1/2" DEEP 18 GAUGE PERFORATED / CORRUGATED METAL PANEL WITH 1/4" DIAMETER PERFORATIONS AT 1/2" CENTERS. WELD TO SUPPORTING FRAME AS SHOWN IN THE DETAILS.
3. SLIDE BOLT, LOCATE INSIDE OR OUTSIDE GATE AS DIRECTED BY OWNER.
4. PAINT ENTIRE GATE ASSEMBLY AFTER FABRICATION USING SYSTEM 300, COLOR SELECTED BY OWNER.
5. FOR ADDITIONAL CONNECTION DETAILS SEE (2819) .

STEEL SINGLE-LEAF GATE
NTS

2817

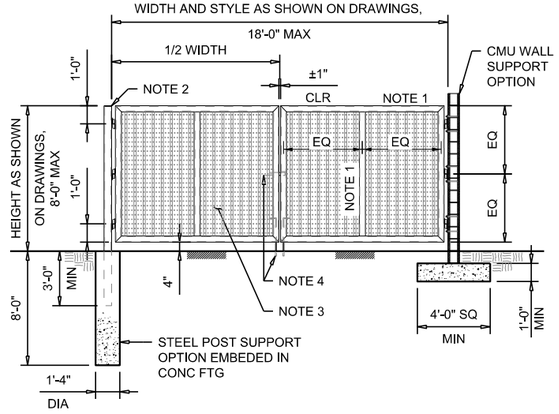

ELEVATION

NOTES:

1. HSS2 1/2x2 1/2x3/16 FRAME, MITER CORNERS AND FULLY WELD ALL JOINTS. COORDINATE GATE WIDTH WITH HARDWARE TO PROPERLY FIT IN THE ROUGH OPENING. GRIND SMOOTH ALL SHARP CORNERS.
2. 1 1/2" DEEP 18 GAUGE PERFORATED / CORRUGATED METAL PANEL WITH 1/4" DIAMETER PERFORATIONS AT 1/2" CENTERS. WELD TO SUPPORTING FRAME AS SHOWN IN THE DETAILS.
3. SLIDE BOLT, LOCATE INSIDE OR OUTSIDE GATE AS DIRECTED BY OWNER.
4. PAINT ENTIRE GATE ASSEMBLY AFTER FABRICATION USING SYSTEM 300, COLOR SELECTED BY OWNER.
5. FOR ADDITIONAL CONNECTION DETAILS SEE (2819) .

STEEL DOUBLE-LEAF GATE
NTS

2818

DESIGNED K ALACOM
DRAWN J MARTIN
CHECKED K ALACOM
APPROVED M FISHER

WATERWORKS ENGINEERS
2290 Douglas Blvd., Suite 105 • Roseville, CA 95661 • 916-780-2888

CITY OF MORRO BAY
WATER RECLAMATION FACILITY
LIFT STATIONS AND OFFSITE PIPELINES

STANDARD DETAILS

STANDARD DETAILS

REGISTERED PROFESSIONAL ENGINEER
KRISTINA P. ALACOM
No. C70952
CIVIL
STATE OF CALIFORNIA
05-29-2020

DATE MAY 2020
PROJECT NUMBER 17-082
DRAWING NUMBER SD-5
SHEET NUMBER 219

CONFORMED SET - DEC 2020

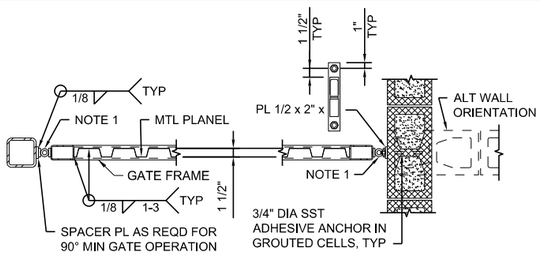

STEEL POST SUPPORT OPTION

CMU WALL SUPPORT OPTION

NOTES:

1. PROVIDE WELD-ON BARREL GATE HINGE W/ 3/4" DIA SST HINGE PIN WHICH PIVOTS ON A BALL BEARING AND FEATURES A "ZERC" TYPE GREASE FITTING. WELDABLE PLATES SHALL BE A MINIMUM OF 3/8"x1 1/2"x3".

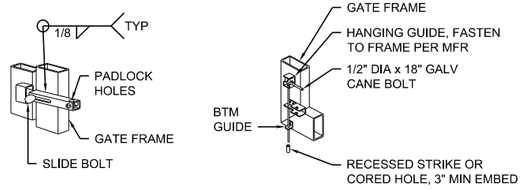

SLIDE BOLT

CANE BOLT

STEEL GATE DETAILS 2819

NTS

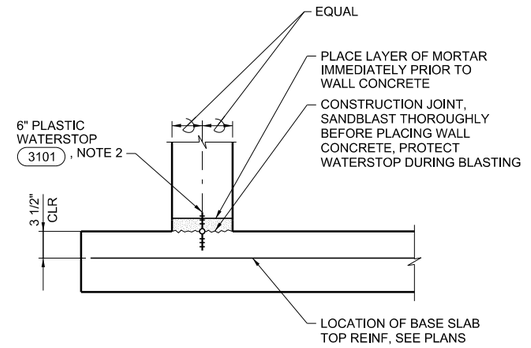

NOTES:

1. FOR WALLS WITH SINGLE MAT OF REINFORCING LOCATE WATERSTOP ON LIQUID FACE, 1" CLEAR OF REINFORCEMENT.
2. SECURE WATERSTOP IN-PLACE AS SPECIFIED.

WALL BASE CONSTRUCTION JOINT 3154

NTS

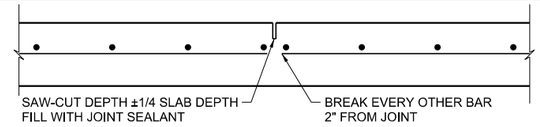

NOTES:

1. SAW-CUT SAME DAY AS POUR AS SOON AS SPALLING WILL NOT OCCUR.
2. CONTRACTOR SHALL USE STRING LINE OR OTHER POSITIVE MEANS TO PLACE REINFORCING AND LOCATE SAWCUT.
3. BREAK REINF AND ADD SPLICE BARS SIMILAR AT DOUBLE MAT.
4. 3/8" TOOLED JOINT MAY BE USED IN PLACE OF SAWN JOINT.

SLAB ON GRADE SAWN JOINT, TYPE A

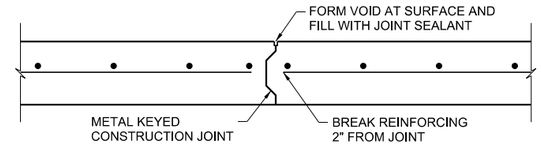

SLAB ON GRADE CONSTRUCTION JOINT, TYPE B

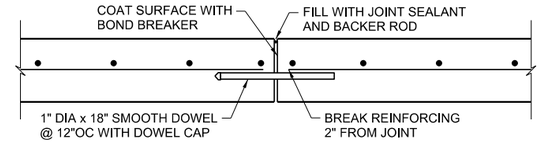

SLAB ON GRADE CONSTRUCTION JOINT, TYPE C

CONC SLAB ON GRADE JOINTS 3160

NTS

NOTES:

1. PAD SIZE SHALL BE MINIMUM INDICATED OR AS SHOWN ON THE DRAWINGS OR AS INDICATED BY THE MANUFACTURER AND APPROVED BY THE ENGINEER.
2. THE SIZE, NUMBER, TYPE, LOCATION, AND THREAD PROJECTION OF THE ANCHOR BOLTS SHALL BE DETERMINED BY THE EQUIPMENT MANUFACTURER, AND SHALL BE AS APPROVED BY THE ENGINEER. ANCHOR BOLTS SHALL BE HELD IN POSITION WITH A ONE PIECE TEMPLATE, MATCHING THE BASE PLATE, WHILE PAD IS BEING POURED.
3. ANCHOR BOLT SLEEVES SHALL BE USED TO PROVIDE THE ANCHOR BOLT A MINIMUM MOVEMENT OF 1/2" IN ALL DIRECTIONS. THE MINIMUM SLEEVE LENGTH SHALL BE 8 TIMES THE BOLT DIAMETER. SLEEVES SHALL BE FILLED WITH NON-SHRINK GROUT.
4. ANCHOR BOLT SLEEVES SHALL HAVE A MINIMUM INTERNAL DIAMETER 1" GREATER THAN BOLT DIAMETER AND A MAXIMUM INTERNAL DIAMETER 3" GREATER THAN ANCHOR BOLT DIAMETER. SLEEVES SHALL BE FILLED WITH NON-SHRINK GROUT.
5. EQUIPMENT BASES SHALL BE INSTALLED LEVEL UNLESS SPECIFIED OTHERWISE.
6. TYPE "D" DETAIL SHALL BE USED ONLY FOR SLABS ON GRADE AND AT GRADE. THE SURROUNDING FLOOR SLAB SHALL NOT BE PLACED UNTIL THE EXACT SIZE AND LOCATION OF THE PAD IS KNOWN.
7. WEDGES OR SHIMS SHALL BE USED TO SUPPORT THE BASE WHILE THE NON-SHRINK GROUT IS PLACED. TEMPORARY LEVELING NUTS SHALL BE BACKED OFF. IF LEFT IN, THE WEDGES OR SHIMS SHALL NOT BE EXPOSED TO VIEW.
8. HEIGHT OF PADS SHALL BE MINIMUM REQUIRED FOR ANCHOR BOLT CLEARANCE TO KEEP ANCHOR BOLT OUT OF SLAB (SEE TABLE BELOW). WHERE EQUIPMENT OR PIPING ELEVATION REQUIRE A PAD HEIGHT LESS THAN THE MINIMUM SHOWN, USE TYPE B WITH BLOCKOUT.

AB DIA (IN.)	1/2	5/8	3/4	7/8	1	1 1/4	1 3/8	1 1/2	1 3/4	2
MIN PAD HT (IN.)	7	8 1/2	10	11	12 1/2	15	16 1/2	18	21	24

9. TYPE "F" PADS MAY BE SUBSTITUTED FOR TYPE "A" PADS FOR LOCATIONS APPROVED IN WRITING BY THE ENGINEER.

EQUIPMENT PAD NOTES 3200

NTS

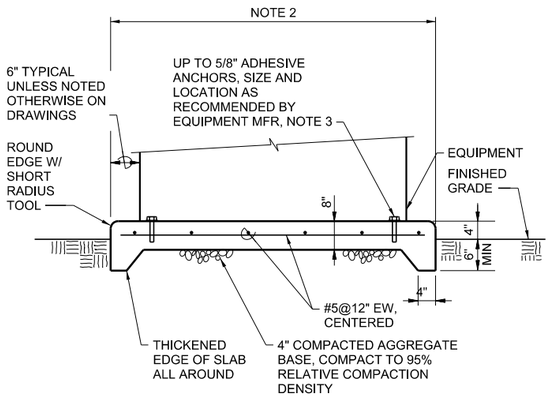

NOTES:

1. SEE (3200) FOR GENERAL EQUIPMENT PAD NOTES.
2. EQUIPMENT PAD SIZE PER DRAWINGS. WHERE PAD SIZE IS NOT SHOWN, SIZE TO FIT EQUIPMENT.
3. IF ANCHOR BOLTS ARE CALLED OUT FOR ON DRAWINGS, PROVIDE ANCHOR BOLTS PER (3210) IN LIEU OF ADHESIVE ANCHORS.

EQUIPMENT PAD-TYPE D 3200D

NTS

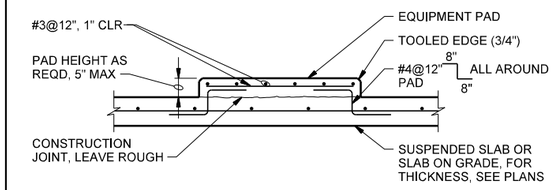

NOTES:

1. SEE (3200) FOR GENERAL EQUIPMENT PAD NOTES.

EQUIPMENT PAD-TYPE F 3200F

NTS

DESIGNED A LINDEMAN
DRAWN J MARTIN
CHECKED A LINDEMAN
APPROVED M FISHER

WATERWORKS ENGINEERS
2290 Douglas Blvd., Suite 105 • Roseville, CA. 95661 • 916-780-2888

CITY OF MORRO BAY
WATER RECLAMATION FACILITY
LIFT STATIONS AND OFFSITE PIPELINES

STANDARD DETAILS

STANDARD DETAILS

REGISTERED PROFESSIONAL ENGINEER
ANDREW L. LINDEMAN
No. C88058
CIVIL
STATE OF CALIFORNIA
05-29-2020

DATE MAY 2020
PROJECT NUMBER 17-082
DRAWING NUMBER SD-6
SHEET NUMBER 220

FILENAME: 1782D-SD801.dgn PLOT DATE: 5/23/2020 11:03:12 AM

CONFORMED SET - DEC 2020

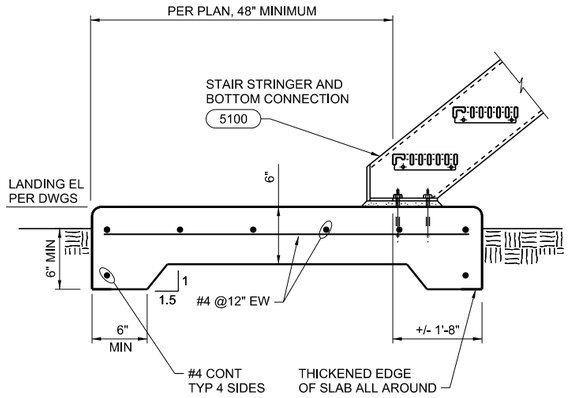

NOTE:

LANDING WIDTH MINIMUM OF CLEAR STAIR WIDTH PLUS 1'-0".

CONCRETE STAIR LANDING

NTS

3203

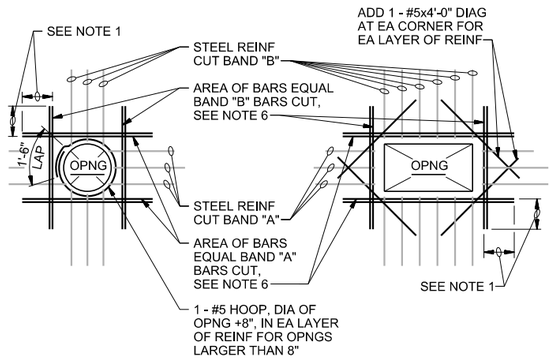

NOTES:

1. PROVIDE MINIMUM LAP, SEE GENERAL STRUCTURAL NOTES. WHERE FULL LAP LENGTH CANNOT BE ACHIEVED DUE TO SLAB OR WALL EDGE, TERMINATE BARS WITH A STANDARD 90 DEGREE BEND 2 INCHES CLEAR OF SLAB OR WALL EDGE. ROTATE HOOKS AS REQUIRED TO MAINTAIN CONCRETE COVER.
2. TYPICAL FOR ALL OPENINGS IN CONCRETE WALLS OF BELOW GRADE AND HYDRAULIC STRUCTURES AND ALL STRUCTURAL CONCRETE SLABS UNLESS INDICATED OTHERWISE ON PLANS.
3. DO NOT WELD REINFORCEMENT TO PIPE SLEEVES AND INSERTS.
4. PROVIDE A MINIMUM OF 2 "A" BARS AND 2 "B" BARS EACH SIDE OF OPENING (1 EACH FACE).
5. FOR OPENINGS LARGER THAN 8'-0", REINFORCE SAME AS FOR 8'-0" OPENINGS.
6. SPACE AT 3 BAR DIAMETERS (OR 3" MINIMUM) ON CENTER.

OPENING REINFORCING

NTS

3301

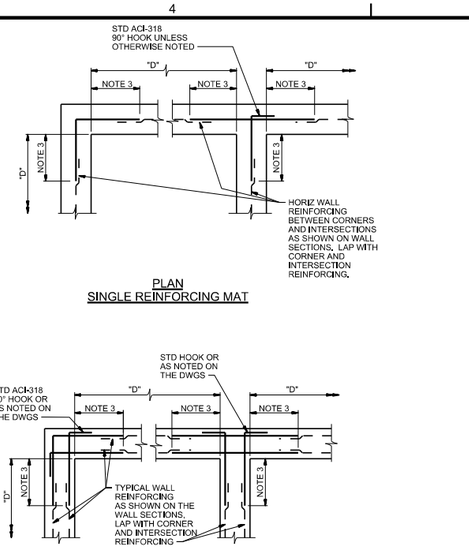

NOTES:

1. TYPICAL HORIZONTAL WALL CORNER AND INTERSECTION REINFORCING LAYOUT IS SHOWN. FOR SIZE AND SPACING, SEE PLANS.
2. WHERE THE CORNER OR INTERSECTION REINFORCING SIZE AND SPACING IS NOT SHOWN, NOTED OR TABULATED ON THE PLANS, THE SIZE AND SPACING SHALL BE THE SAME AS THE WALL HORIZONTAL REINFORCING SHOWN ON THE WALL SECTIONS OR AS NOTED FOR THE REINFORCING BETWEEN THE CORNERS OR INTERSECTIONS.
3. EXCEPT WHERE OTHERWISE SHOWN ON THE DRAWINGS, THE LENGTH INDICATED AS "NOTE 3" SHALL BE THE LESSER OF D/4, 8 FEET, OR 1.0 TIMES THE HEIGHT OF THE WALL, EXCEPT THAT IN NO CASE SHALL IT BE LESS THAN 2.0 FEET.
4. D = LENGTH OF WALL PARALLEL TO THE BAR LENGTH IN QUESTION.
5. USE THE LAP LENGTH AS REQUIRED FOR THE SMALLER OF THE TWO REINFORCING BARS BEING SPLICED, SEE CONCRETE REINFORCING NOTES.

TYPICAL WALL CORNER AND INTERSECTION REINFORCING

NTS

3303

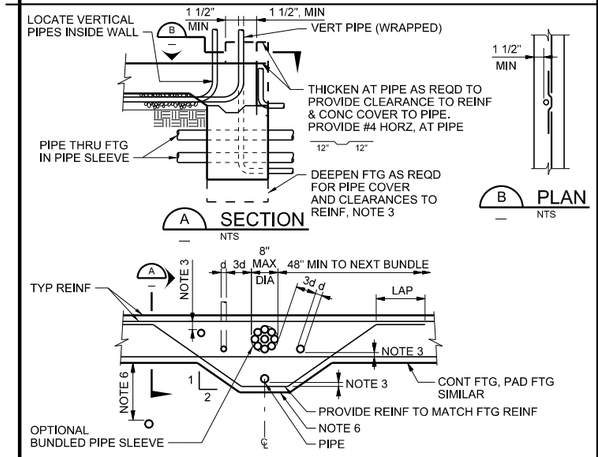

NOTES:

1. PIPE = ANY PENETRATION THRU OR EMBEDDED IN FOUNDATION.
2. ALL PIPES THROUGH FOOTINGS TO BE WRAPPED OR SLEEVED AS FOLLOWS:
   a. SLEEVES: PROVIDE 1" MIN CLR ALL AROUND O.D. PIPE TO I.D. SLEEVE, UNO.
   b. WRAPPED VERTICAL PIPES: PROVIDE 1/8" NOMINAL SHEET FOAM WITH (3) WRAPS MINIMUM,UNO.
   c. WRAPPED HORIZONTAL PIPES: PROVIDE 1/8" NOMINAL SHEET FOAM WITH (8) WRAPS MINIMUM,UNO.
   d. UNDERGROUND FIRE LINES 4" AND LARGER:
      a. SLEEVES: PROVIDE 2" MIN CLEAR ALL AROUND O.D. PIPE TO I.D. SLEEVE
      b. WRAPPED: PROVIDE 1/8" NOMINAL SHEET FOAM WITH (16) WRAPS MIN. WRAPPED & SLEEVED PIPES SHALL HAVE 1 1/2" MIN CLEAR TO REINF STEEL. MIN CONC COVER AT PIPES TO BE 3".
3. CLEARANCE BETWEEN PIPES TO BE 3d MIN TYP. WITH A MAXIMUM OF (8) PIPES PER 48". GROUPS OF PIPES MAY BE BUNDLED AS SHOWN, EXCEPT IN PAD FOOTINGS.
4. NO PIPE TO RUN PARALLEL IN FOOTINGS, STEM OR CURB. PVC CONDUIT (PIPE) EMBEDDED IN CURB/STEM MAY BE WIRED TIED TO HORIZ REINF.
5. NO HORIZONTAL PIPES ALLOWED THROUGH FOOTING WITH 2'-0" EACH SIDE OF HOLD-DOWNS OR STEEL COLUMNS. NO VERTICAL PIPES ALLOWED IN FOOTINGS AT BRACED FRAMES.
6. PROVIDE 18" MIN OF COMPACTED FILL ABOVE PIPES UP TO 12" DIA. FOR LARGER PIPES INCREASE COMPACTED FILL DEPTH 1'-0" FOR EACH 6" INCREASE IN PIPE DIAMETER. OTHERWISE DEEPEN THE FOOTING AS SHOWN.

PIPES THRU FOOTINGS

NTS

3305

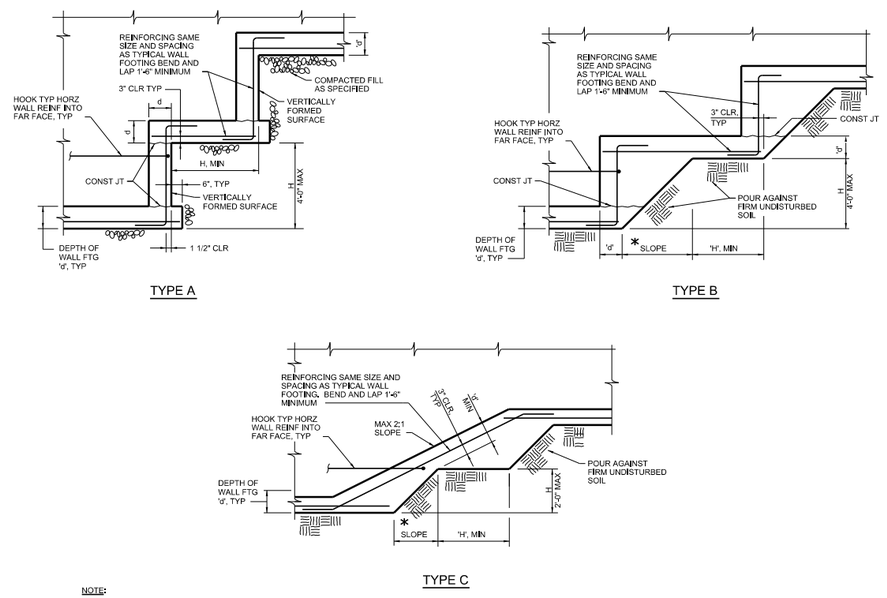

NOTE:

* WALL FOOTING SHOWN, MAT FOUNDATION SIMILAR. PROVIDE TOP AND BOTTOM REBAR MATS WHERE PRESENT

STEPPED FOOTING

NTS

3308

REGISTERED PROFESSIONAL ENGINEER ANDREW L. LINDEMAN No. C88058 CIVIL STATE OF CALIFORNIA
05-29-2020

DESIGNED A LINDEMAN
DRAWN J MARTIN
CHECKED A LINDEMAN
APPROVED M FISHER

WATERWORKS ENGINEERS
2290 Douglas Blvd., Suite 105 • Roseville, CA. 95661 • 916-780-2888

CITY OF MORRO BAY
WATER RECLAMATION FACILITY
LIFT STATIONS AND OFFSITE PIPELINES

STANDARD DETAILS

STANDARD DETAILS

DATE MAY 2020
PROJECT NUMBER 17-082
DRAWING NUMBER SD-7
SHEET NUMBER 221

FILENAME: 1782D-SD801.dgn PLOT DATE: 5/23/2020 11:04:46 AM

CONFORMED SET - DEC 2020

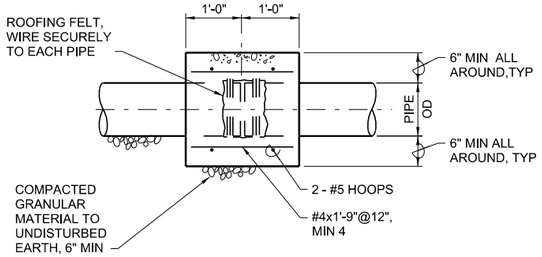

CONCRETE CLOSURE COLLAR
NTS

3323

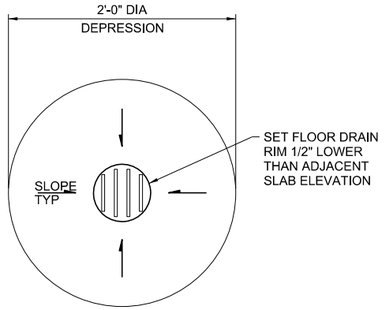

FLOOR DRAIN
NTS

3600

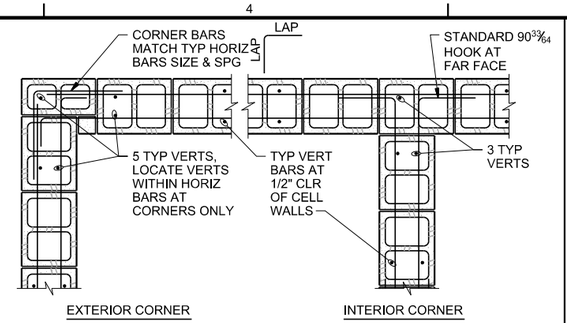

NOTES:
1. LAP=48 BAR DIAMETERS OR 2'-0" MINIMUM UNLESS OTHERWISE NOTED.
2. PROVIDE A STANDARD 90°3/64 HOOK EACH END ON ANY HORIZONTAL BAR BETWEEN OPENINGS, CONTROL JOINTS, OR CORNERS LESS THAN 6'-0" IN LENGTH.

CMU WALL CORNERS
NTS

4001

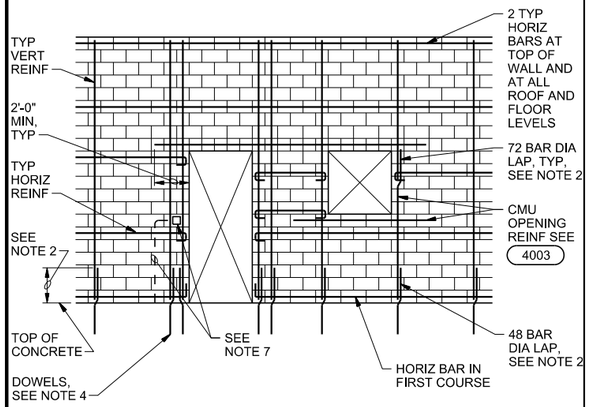

ELEVATION

NOTES:
1. FOR TYPICAL WALL REINFORCING, SEE WALL SECTIONS AND DETAILS FOR EACH FACILITY.
2. LAP VERTICAL REINFORCING WITH WALL DOWELS 48 BAR DIAMETERS (2'-0" MIN), LAP ALL OTHER VERTICAL BARS 72 BAR DIAMETERS.
3. STAGGER SPLICES IN ADJACENT HORIZONTAL BARS IN THE SAME COURSE BY 2'-0".
4. PROVIDE DOWEL BARS IN FOUNDATION TO MATCH ALL VERTICAL REINFORCING.
5. FOR ADDED REINFORCING AT WALL INTERSECTIONS AND CORNERS, SEE 4001
6. SOLID GROUT ALL CMU WALLS UNLESS NOTED OTHERWISE.
7. DO NOT PLACE VERTICAL CONDUIT IN THE SAME CELL AS VERTICAL REINFORCING.

REINFORCED CMU WALL
NTS

4002

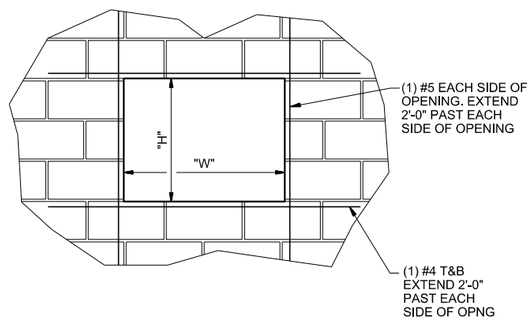

NOTES:
1. THIS DETAIL APPLICABLE WHERE OPNG LESS THEN 3'-0" IN ANY DIMENSION. SEE DETAIL 4004 FOR LARGER OPENINGS.
2. TERMINATE HORZ REINF WITH 180° HOOK AT WALL ENDS AND CMU CONTROL JOINTS PER DETAIL.

CMU OPENINGS LESS THAN 3'-0"
NTS

4003

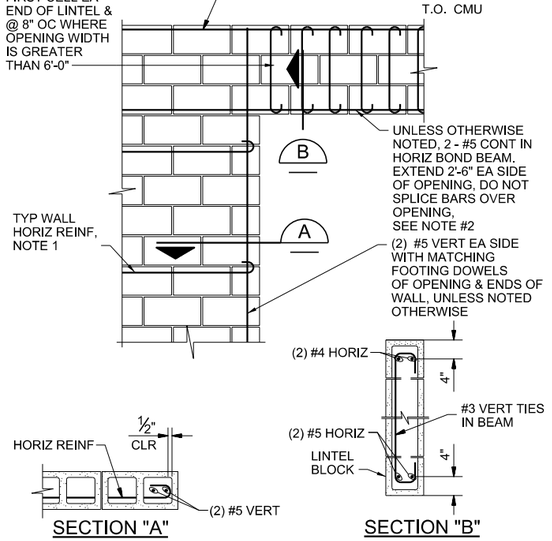

NOTES:
1. TERMINATE HORIZ REINF WITH 180° HOOK AT WALL ENDS , JAMB OPENINGS AND CMU CONTROL JOINTS.
2. PLACE (2) #5 HORIZ AT WINDOW SILLS , SIM TO TOP OF OPENING.

CMU OPENINGS GREATER THAN 3'-0"
NTS

4004

DESIGNED A LINDEMAN
DRAWN J MARTIN
CHECKED A LINDEMAN
APPROVED M FISHER

WATERWORKS ENGINEERS
2280 Douglas Blvd., Suite 105 • Roseville, CA 95661 • 916-780-2888

CITY OF MORRO BAY
WATER RECLAMATION FACILITY
LIFT STATIONS AND OFFSITE PIPELINES

STANDARD DETAILS

STANDARD DETAILS



DATE MAY 2020
PROJECT NUMBER 17-082
DRAWING NUMBER SD-8
SHEET NUMBER 222

CONFORMED SET - DEC 2020

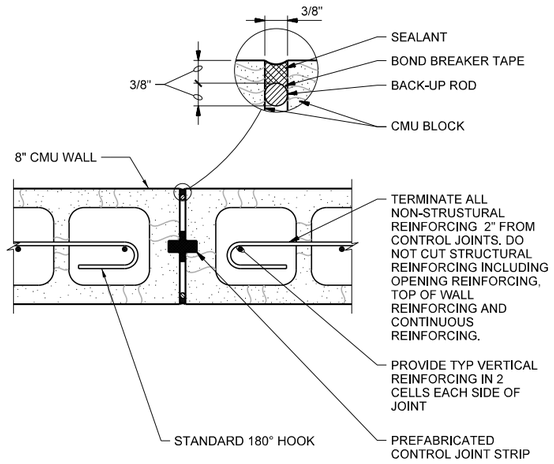

NOTE:

12" CMU WALL WITH 2 LAYERS OF REINFORCING IS SIMILAR.

CMU CONTROL JOINT 4100

NTS

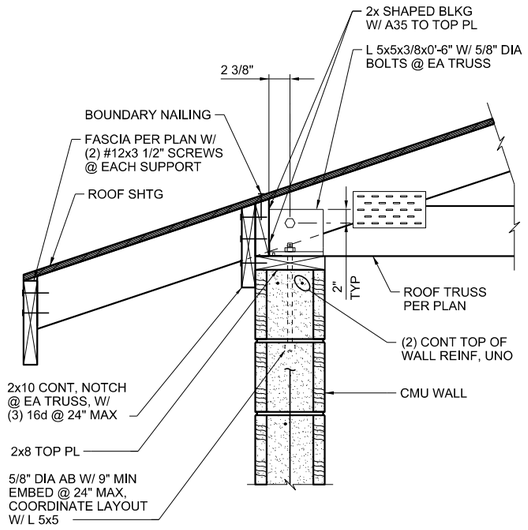

TOP OF WALL SECTION 4200

NTS

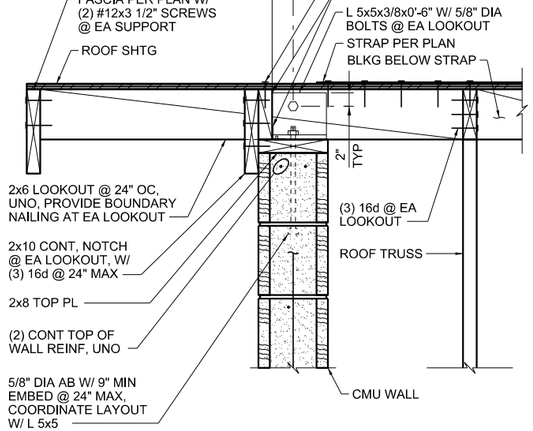

GABLE END WALL SECTION 4201

NTS

STAIRWAY WIDTH	BEARING BARS ALUMINUM TREAD
2'-3" OR LESS	1"x3/16"
2'-9" OR LESS	1 1/4"x3/16"
3'-5" OR LESS	1 1/2"x3/16"
4'-2" OR LESS	1 3/4"x3/16"

NOTES:

1. PROVIDE PROTECTION FOR DISSIMILAR METALS AND CONCRETE AS SPECIFIED.
2. GRIND EXPOSED FACES ONLY.
3. STAIR HANDRAIL NOT SHOWN FOR CLARITY. PROVIDE STAIR HANDRAIL BOTH SIDES.
4. FABRICATOR TO COORDINATE BOLTED TREADS AND RAIL POST CONNECTIONS

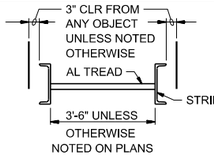

STAIR TREADS

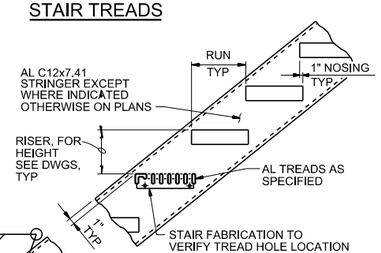

STRINGERS

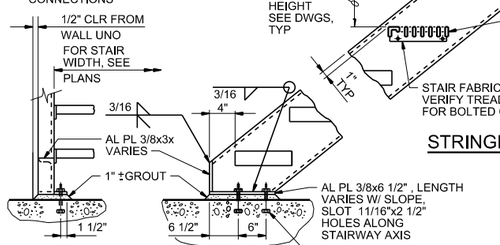

SECTION

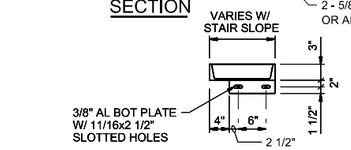

PLAN BOTTOM

ALUMINUM STAIRS

NTS

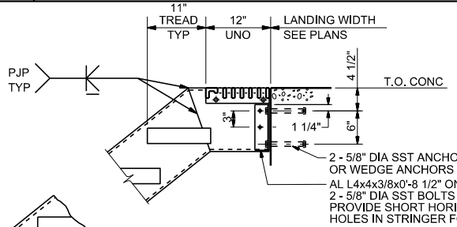

TOP CONNECTION CONCRETE

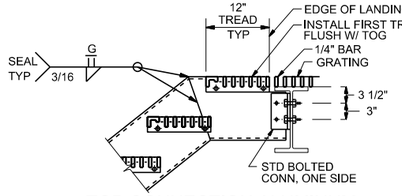

TOP CONNECTION ALUMINUM

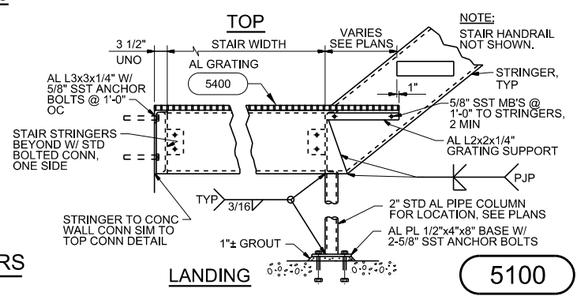

LANDING 5100

DESIGNED A LINDEMAN
DRAWN J MARTIN
CHECKED A LINDEMAN
APPROVED M FISHER

WATERWORKS ENGINEERS
2290 Douglas Blvd., Suite 105 • Roseville, CA 95661 • 916-780-2888

CITY OF MORRO BAY
WATER RECLAMATION FACILITY
LIFT STATIONS AND OFFSITE PIPELINES

STANDARD DETAILS

STANDARD DETAILS

REGISTERED PROFESSIONAL ENGINEER ANDREW L. LINDEMAN No. C88058 CIVIL STATE OF CALIFORNIA
05-29-2020

DATE MAY 2020
PROJECT NUMBER 17-082
DRAWING NUMBER SD-9
SHEET NUMBER 223

FILENAME: 1782D-SD801.dgn PLOT DATE: 5/23/2020 11:08:48 AM

CONFORMED SET - DEC 2020

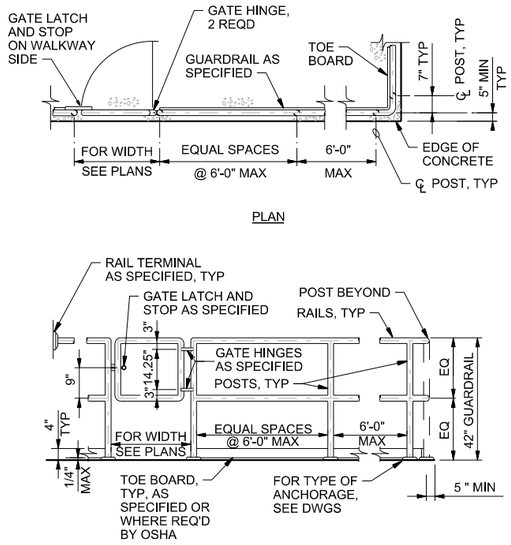

NOTE:

1. FOR GUARDRAIL MATERIAL REFERENCE DRAWINGS AND/OR JOB SPECIFICATIONS

TWO-RAIL GUARDRAIL 5200A

NTS

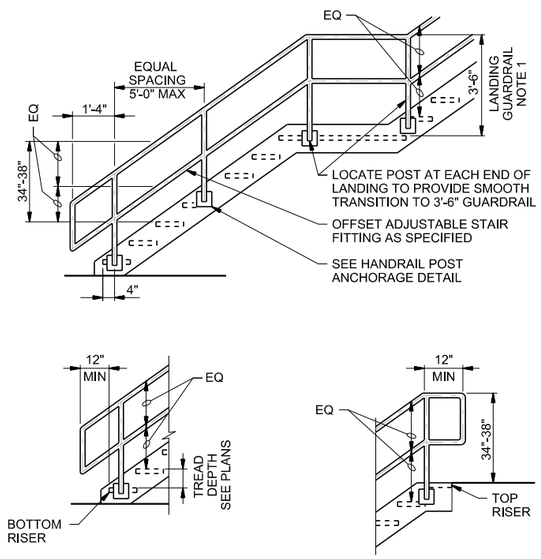

NOTES:

1. SEE TYPICAL GUARDRAIL DETAIL (5200A) .
2. SEE SPECIFICATIONS FOR HANDRAIL MATERIAL.

TWO-RAIL HANDRAIL AT STAIRS 5201A

NTS

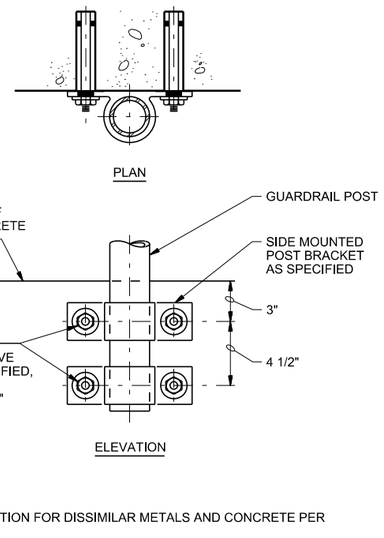

NOTES:

1. PROVIDE PROTECTION FOR DISSIMILAR METALS AND CONCRETE PER SPECIFICATIONS.
2. USE SIDE MOUNTED POST BRACKET AS A TEMPLATE FOR THE ANCHOR BOLTS.
3. MAINTAIN THE CLEARANCES BETWEEN THE TOE BOARD AND THE CONCRETE SURFACES REQUIRED BY ALL STATE AND FEDERAL SAFETY REQUIREMENTS.

GUARDRAIL POST ANCHORAGE-ALUMINUM 5250B

NTS

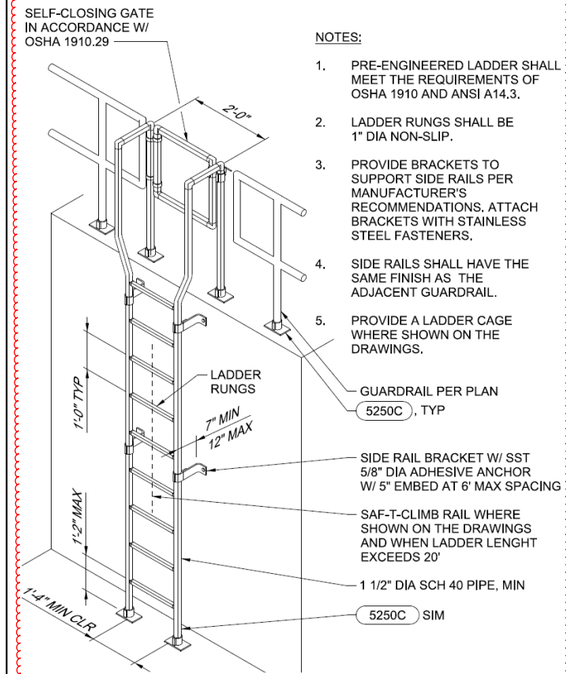

NOTES:

1. PRE-ENGINEERED LADDER SHALL MEET THE REQUIREMENTS OF OSHA 1910 AND ANSI A14.3.
2. LADDER RUNGS SHALL BE 1" DIA NON-SLIP.
3. PROVIDE BRACKETS TO SUPPORT SIDE RAILS PER MANUFACTURER'S RECOMMENDATIONS. ATTACH BRACKETS WITH STAINLESS STEEL FASTENERS.
4. SIDE RAILS SHALL HAVE THE SAME FINISH AS THE ADJACENT GUARDRAIL.
5. PROVIDE A LADDER CAGE WHERE SHOWN ON THE DRAWINGS.

FIXED LADDER ALUMINUM 5300

NTS

1

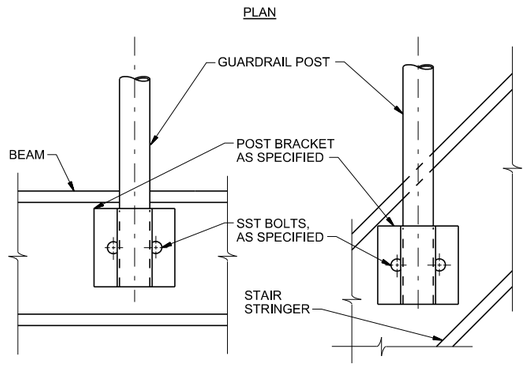

NOTES:

1. PROVIDE PROTECTION FOR DISSIMILAR METALS AND CONCRETE PER SPECIFICATIONS.
2. HANDRAIL POST ANCHORAGE TO ALSO BE USED FOR GUARDRAIL POST ANCHORAGE.
3. REFERENCE DRAWINGS AND OR SPECIFICATIONS FOR MATERIALS.

GUARDRAIL POST ANCHORAGE-TYPE D 5250D

NTS

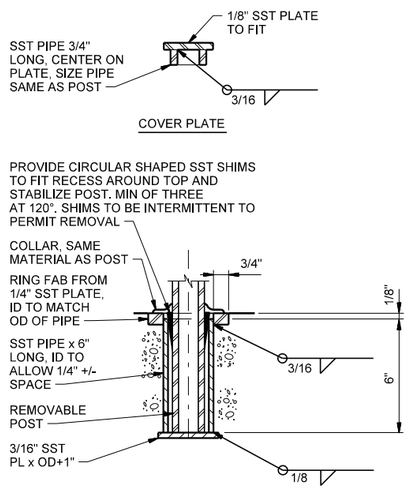

NOTES:

1. PROVIDE COVER PLATE FOR EACH ANCHORAGE SLEEVE.
2. HANDRAIL POST ANCHORAGE TO ALSO BE USED FOR GUARDRAIL POST ANCHORAGE.

GUARDRAIL POST ANCHORAGE-TYPE E 5250E

NTS

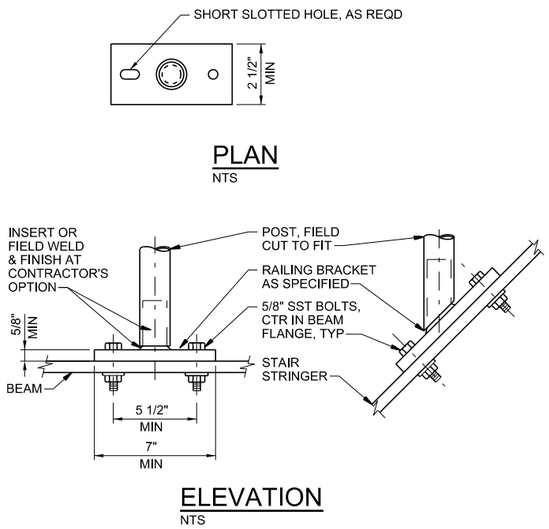

NOTE:

PROVIDE PROTECTION FOR DISSIMILAR METALS AND CONCRETE PER SPECIFICATIONS.

HANDRAIL POST ANCHORAGE TYPE F 5250F

NTS

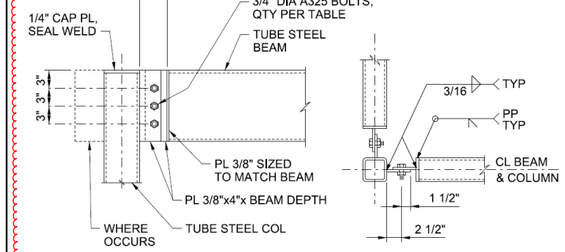

BOLT QUANTITY

NOMINAL BEAM DEPTH, INCHES	ROWS OF BOLTS
4	1, CTR BOLT IN PL
6	1
8-10	2
12-15	3

TYP TUBE STEEL BEAM AND COLUMN CONNECTION 5804

NTS

1

REGISTERED PROFESSIONAL ENGINEER ANDREW L. LUNDEEN No. C88058 CIVIL STATE OF CALIFORNIA 05-29-2020

DESIGNED J KELLOGG
DRAWN B TROTTER
CHECKED J KELLOGG
APPROVED M FISHER

WATERWORKS ENGINEERS
2280 Douglas Blvd., Suite 105 • Roseville, CA. 95661 • 916-780-2888

CITY OF MORRO BAY
WATER RECLAMATION FACILITY
LIFT STATIONS AND OFFSITE PIPELINES

STANDARD DETAILS

STANDARD DETAILS

DATE MAY 2020
PROJECT NUMBER 17-082
DRAWING NUMBER SD-10
SHEET NUMBER 224

FILENAME: 1782D-SD801.dgn PLOT DATE: 5/23/2020 11:09:54 AM

CONFORMED SET - DEC 2020

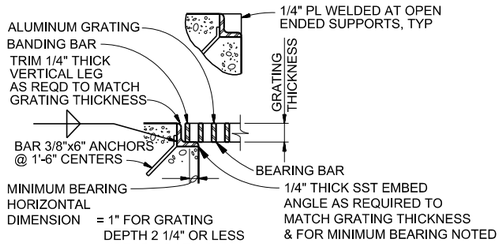

CONCRETE INSERT
ANGLE-SUPPORTED

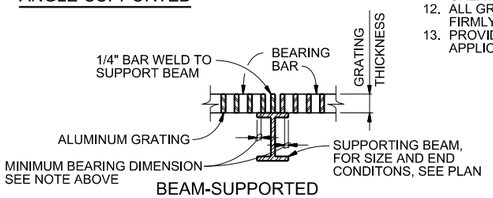

BEAM-SUPPORTED

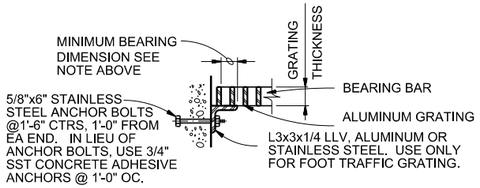

LEDGER ANGLE-SUPPORTED

GRATING NOTES

1. EXTEND GRATING CONTINUOUSLY OVER GATE GUIDES AND GATES.
2. NOTCH GRATING SUPPORTS AT GATES AS REQUIRED.
3. GRATING SPAN ←→ SEE PLAN.
4. WIDTH OF GRATING SECTIONS SHALL NOT EXCEED 3'-0" AND INDIVIDUAL SECTION WEIGHT SHALL NOT EXCEED 150 POUNDS.
5. SHOP DRAWINGS BASED ON FIELD DIMENSIONS SHALL BE SUBMITTED TO THE ENGINEER PRIOR TO FABRICATION.
6. MATERIAL FOR SUPPORTS OF ALUMINUM GRATING TO BE SAME AS GRATING, EXCEPT METAL SUPPORTS THAT ARE TO BE EMBEDED IN CONCRETE SHALL BE TYPE 316 STAINLESS STEEL.
7. UNLESS NOTED OTHERWISE ON PLANS, GRATING THICKNESS SHALL BE AS TABULATED IN "GRATING THICKNESS TABLE" FOR APPLICABLE TRAFFIC.
8. BEARING BAR THICKNESS FOR GRATING TO BE 3/16" MINIMUM.
9. BAND ALL EDGES WITH 3/16 x DEPTH OF BEARING BAR.
10. PROVIDE MISCELLANEOUS GRATING FASTENERS AS REQUIRED.
11. THE HORIZONTAL CLEARANCE BETWEEN THE GRATING AND GRATING SUPPORTS SHALL NOT BE LESS THAN 1/4" NOR GREATER THAN 1/2" AND AS SPECIFIED.
12. ALL GRATING SECTIONS, WHEN IN PLACE, SHALL ALWAYS BE FIRMLY ANCHORED TO THEIR SUPPORTS AS SPECIFIED.
13. PROVIDE SUPPORT TYPE SHOWN IN DRAWINGS OR MOST APPLICABLE FOR THE INSTALLATION CONDITIONS.

FOOT TRAFFIC
GRATING THICKNESS TABLE

MAXIMUM SPAN	ALUMINUM (IN.)
3'-6"	1 1/4"
4'-0"	1 1/2"
4'-6"	1 3/4"
5'-0"	1 3/4"
5'-6"	2"
6'-0"	2 1/4"
6'-6"	2 1/4"
7'-0"	2 1/2"

ALUMINUM GRATING
NTS

5400

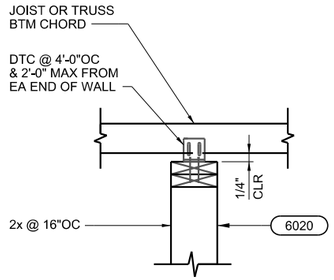

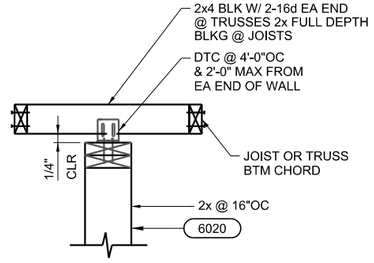

*PLYWOOD AND FINISHES NOT SHOWN FOR CLARITY

NON-BRG WALL DETAIL
NTS

6010

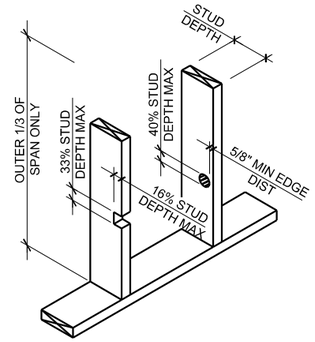

BORED HOLES SHALL NOT BE LOCATED AT THE SAME SECTION OF STUD AS A CUT OR NOTCH

WOOD STUD CUTTING, NOTCHING, & BORING LIMITS
NTS

6020

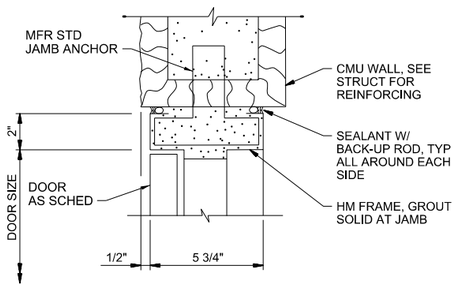

NOTE:
HEAD SIMILAR

DOOR JAMB - 8" CMU
NTS

8100

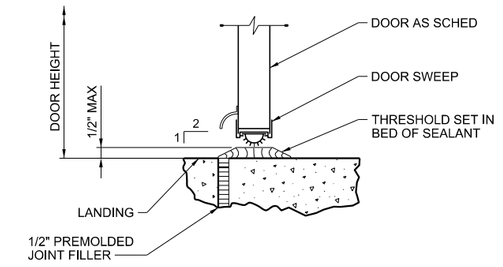

FLUSH LANDING - TYPE A

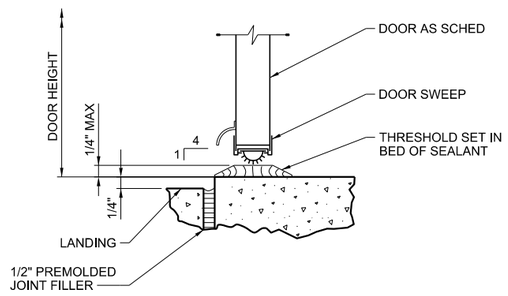

OFFSET LANDING - TYPE B

DOOR THRESHOLD
NTS

8110

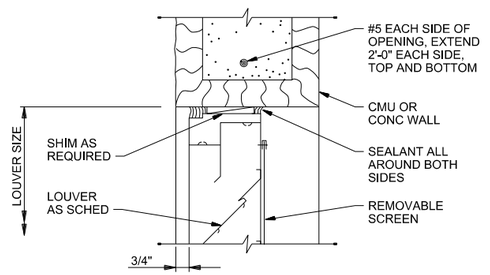

HEAD
(JAMB SIMILAR)

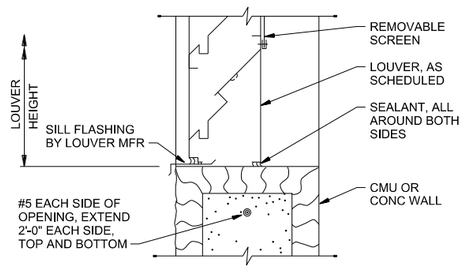

SILL

LOUVER
NTS

8115

DESIGNED A LINDEMAN
DRAWN J MARTIN
CHECKED A LINDEMAN
APPROVED M FISHER

WATERWORKS ENGINEERS
2290 Douglas Blvd., Suite 105 • Roseville, CA 95661 • 916-780-2888

CITY OF MORRO BAY
WATER RECLAMATION FACILITY
LIFT STATIONS AND OFFSITE PIPELINES

STANDARD DETAILS

STANDARD DETAILS

REGISTERED PROFESSIONAL ENGINEER ANDREW L. LINDEMAN No. C88058 CIVIL STATE OF CALIFORNIA 05-29-2020

DATE MAY 2020
PROJECT NUMBER 17-082
DRAWING NUMBER SD-11
SHEET NUMBER 225

FILENAME: 1782D-SD801.dgn PLOT DATE: 5/23/2020 11:11:23 AM

CONFORMED SET - DEC 2020

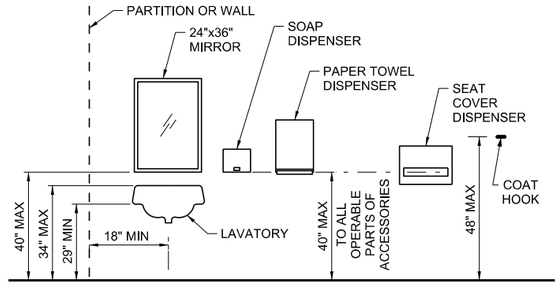

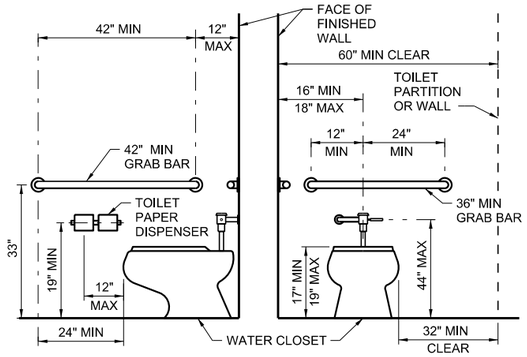

STANDARD ACCESSIBLE FIXTURE MOUNTING LOCATIONS

NTS

10100

DIMENSION TABLE	
PIPE SIZE	A
2-1/2"	2-1/2"
3"	2-1/2"
4"	3"
6"	3"
8"	3"
10"	3"
12"	3"
14"	4"
16"	4"
18"	6"
20"	6"
24"	6"
30"	6"
36"	6"

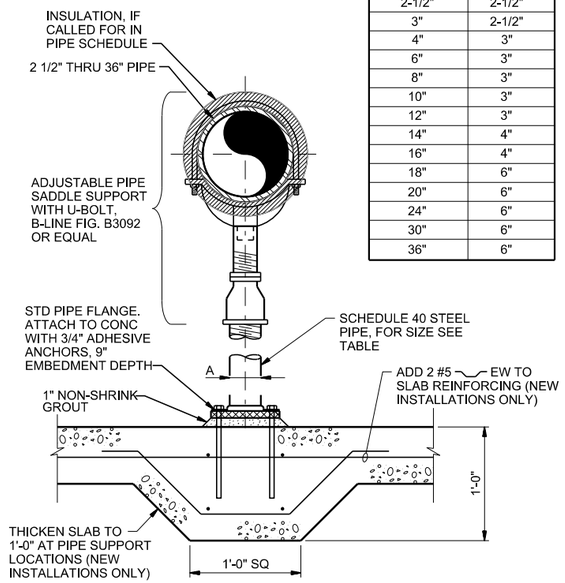

ADJUSTABLE-HEIGHT SADDLE PIPE SUPPORT

NTS

15000

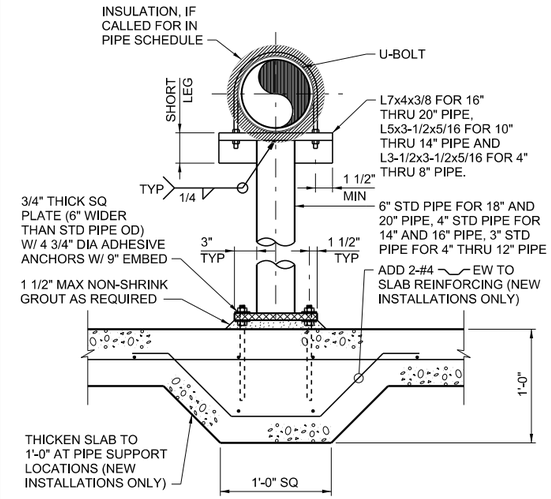

NOTES:

1. COAT ALL SHAPES PER SPECIFICATION SECTION 09900 SYSTEM 300.

FIXED-HEIGHT T-POST PIPE SUPPORT

NTS

15001

DIMENSION TABLE	
PIPE SIZE	(B)
4" THRU 16"	2'-0"
18" THRU 20"	3'-0"

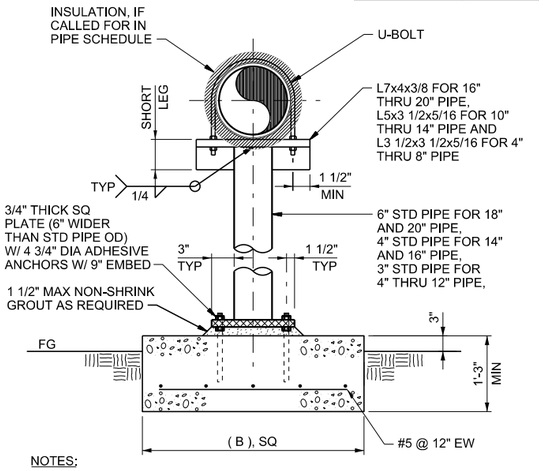

NOTES:

1. COAT ALL SHAPES PER SPECIFICATION SECTION 09900 SYSTEM 300.

FIXED-HEIGHT T-POST PIPE SUPPORT WITH CONCRETE PAD

NTS

15001A

DIMENSION TABLE	
PIPE SIZE	(B)
2-1/2" - 16"	2'-0"
18" - 24"	3'-0"
30" - 36"	4'-0"

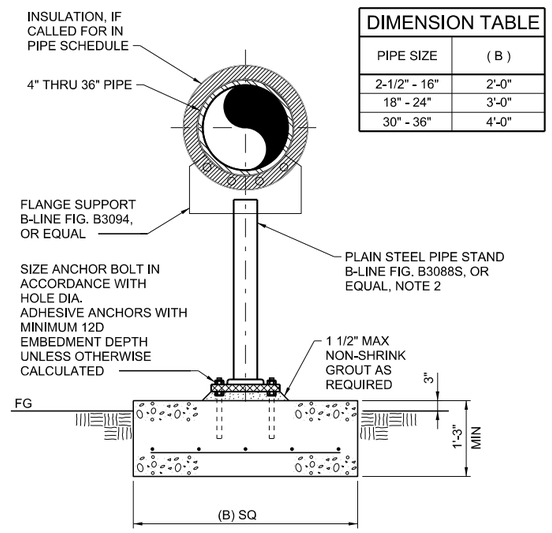

NOTES:

1. COAT ALL SHAPES PER SPECIFICATION SECTION 09900 SYSTEM 300.
2. B-LINE FIG. B3088 MAY BE USED IN NON-SEISMIC SUPPORT APPLICATIONS OR WHERE 12X ANCHOR HOLE SPACING IS PROVIDED. FOR VERTICAL ADJUSTMENTS USE PIPE ADJUSTER B-LINE FIG. B3089 AND FIG. B3088ST OR FIG. B3088T IN NON-SEISMIC SUPPORT APPLICATIONS.

FLANGE MOUNTED PIPE SUPPORT W/ CONCRETE PAD

NTS

15002A

NOTE:

USE NEOPRENE SLEEVE ON COPPER AND PVC PIPING AT STRAPS AND BRACKETS.

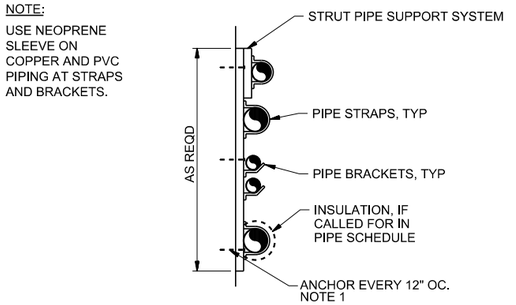

WALL MOUNTED

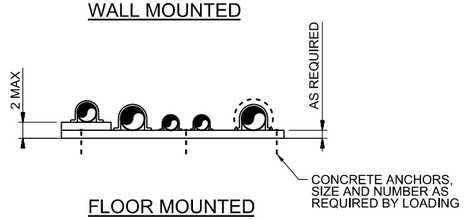

FLOOR MOUNTED

NOTE :

1. ATTACH TO WALL WITH SST ANCHORS, 3/8" DIAMETER MIN, COORDINATED WITH WALL CONSTRUCTION

PIPE SUPPORTS

NTS

15010

DESIGNED K ALACON
DRAWN B TROTTER
CHECKED K ALACON
APPROVED M FISHER

WATERWORKS ENGINEERS
2280 Douglas Blvd., Suite 105 • Roseville, CA 95661 • 916-780-2888

CITY OF MORRO BAY
WATER RECLAMATION FACILITY
LIFT STATIONS AND OFFSITE PIPELINES

STANDARD DETAILS

STANDARD DETAILS

REGISTERED PROFESSIONAL ENGINEER
KRISTINA P. ALACON
No. C70952
CIVIL
STATE OF CALIFORNIA
05-29-2020

DATE MAY 2020
PROJECT NUMBER 17-082
DRAWING NUMBER SD-12
SHEET NUMBER 226

FILENAME: 1782D-SD801.dgn PLOT DATE: 5/23/2020 11:14:40 AM

CONFORMED SET - DEC 2020

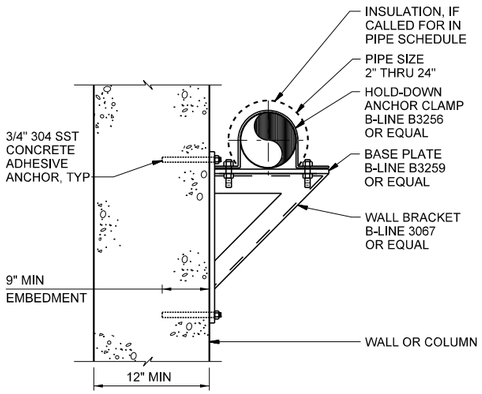

NOTES:

1. ALL PIPE SUPPORT MATERIALS TO BE 304 SST.

FIXED PIPE SUPPORT-WALL BRACKET 2" - 18"

NTS

15011A

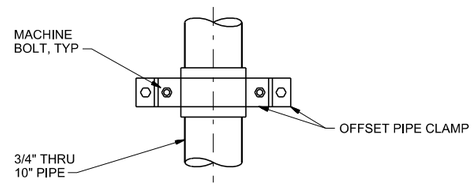

PLAN OR VERTICAL PIPE ELEVATION

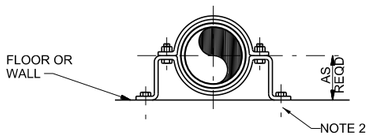

SECTION

NOTES:

1. FOR VERTICAL PIPE RUNS ONLY.
2. ATTACH TO WALL WITH SST ANCHORS, 3/8" DIAMETER MIN, COORDINATED WITH WALL CONSTRUCTION

WALL-MOUNTED STANDOFF PIPE SUPPORT, TYPE 1

NTS

15040

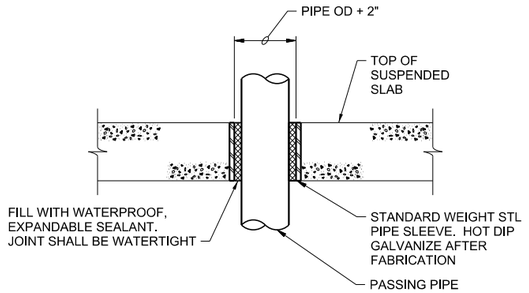

NOTES:

1. COAT FLOOR SLEEVE WITH SPECIFIED PAINT SYSTEM BEFORE CONCRETE PLACEMENT.

FLOOR SLEEVE

NTS

15103

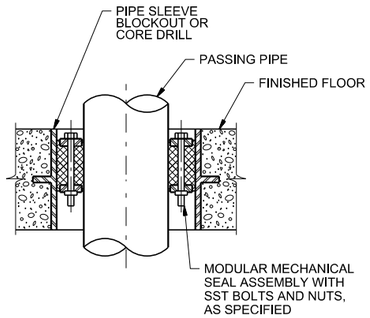

FLOOR SLEEVE WITH MODULAR MECHANICAL SEAL

NTS

15105

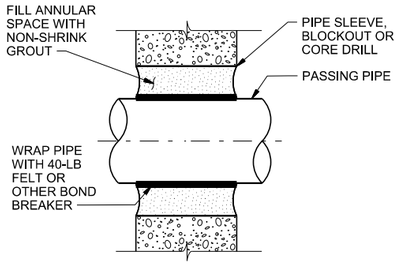

WALL SLEEVE WITH GROUT SEAL

NTS

15131

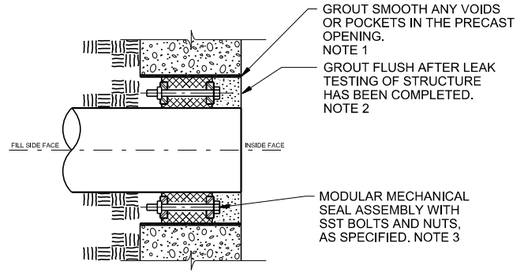

NOTES:

1. COORDINATE MODULAR SEAL SPACE REQUIRMENTS WITH PRECAST VENDER FOR OPENING SIZES PRIOR TO PLACING ORDER OF PRE-CAST STRUCTURE.
2. AFTER MODULAR SEAL INSTALL AND LEAK TEST BUT BEFORE GROUT IS PLACED, GREASE INSIDE FACE OF SEAL.
3. INSTALL PER MANUFACTURER'S INSTRUCTIONS WITH THE BOLT HEADS FACING THE INSIDE FACE OF THE STRUCTURE.

PRE-CAST OPENING WITH MODULAR MECHANICAL SEAL (BURIED)

NTS

15132A

DESIGNED K ALACON
DRAWN J MARTIN
CHECKED K ALACON
APPROVED M FISHER

WATERWORKS ENGINEERS
2290 Douglas Blvd., Suite 105 • Roseville, CA 95661 • 916-780-2888

CITY OF MORRO BAY
WATER RECLAMATION FACILITY
LIFT STATIONS AND OFFSITE PIPELINES

STANDARD DETAILS

STANDARD DETAILS

REGISTERED PROFESSIONAL ENGINEER
KRISTINA P. ALACON
No. C70952
CIVIL
STATE OF CALIFORNIA
05-29-2020

DATE MAY 2020
PROJECT NUMBER 17-082
DRAWING NUMBER SD-13
SHEET NUMBER 227

FILENAME: 1782D-SD801.dgn PLOT DATE: 5/23/2020 11:15:56 AM

CONFORMED SET - DEC 2020

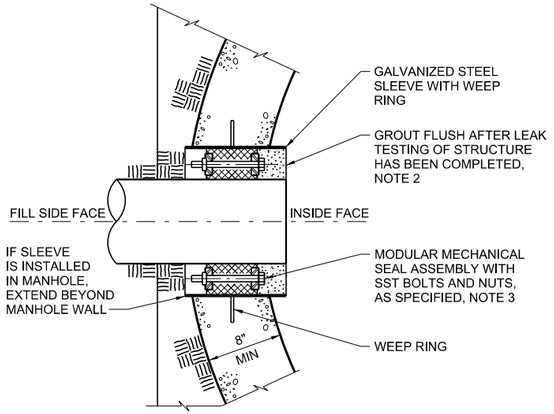

NOTES:

1. COORDINATE MODULAR SEAL SPACE REQUIRMENTS WITH PRECAST VENDER FOR OPENING SIZES PRIOR TO PLACING ORDER OF PRE-CAST STRUCTURE.
2. AFTER MODULAR SEAL INSTALL AND LEAK TEST BUT BEFORE GROUT IS PLACED, GREASE INSIDE FACE OF SEAL.
3. INSTALL PER MANUFACTURER'S INSTRUCTIONS WITH THE BOLT HEADS FACING THE INSIDE FACE OF THE STRUCTURE.

PRE-CAST MANHOLE OPENING WITH MODULAR MECHANICAL SEAL (BURIED)

NTS

15132C

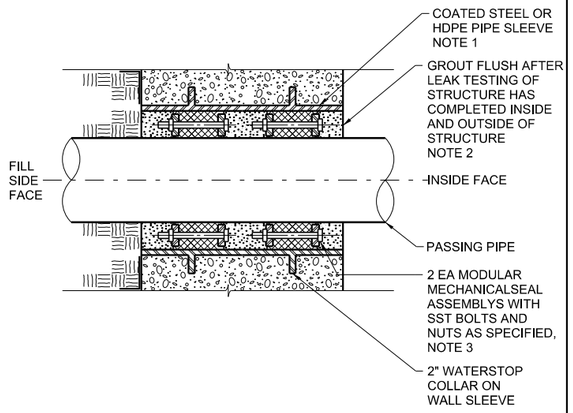

NOTES:

1. COORDINATE SIZE OF WALL SLEEVE WITH MODULAR MECHANICAL SEAL MANUFACTURER TO CREATE A LEAK PROOF ASSEMBLY TO 20 PSI.
2. AFTER MODULAR SEAL INSTALL AND LEAK TESTED, BUT BEFORE GROUT IS PLACED GREASE INSIDE FACE OF SEAL.
3. INSTALL PER MANUFACTURES INSTRUCTIONS WITH THE BOLT HEADS FACING THE INSIDE FACE OF THE STRUCTURE.

WALL SLEEVE WITH DOUBLE MODULAR MECHANICAL SEALS

NTS

15132D

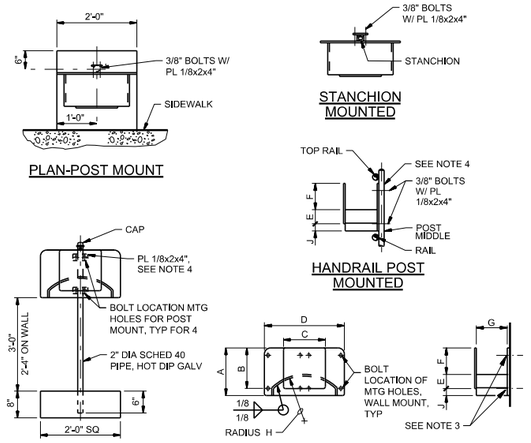

RACK TYPE	DIMENSION IN INCHES								
	A	B	C	D	E	F	G	H	J
TYPE A-3/4" & 1" HOSE	9	7-1/2	6	9	3	4	7-1/2	9-3/4	2
TYPE B-1 1/2" HOSE	12	10	9	12	4	6	10	13	2

NOTES:

1. INTERIOR UNITS SHALL BE FABRICATED FROM 1/8" A-36 STEELPLATE AND ENTIRE UNIT SHALL BE HOT DIP GALVANIZED AFTERFABRICATION.
2. EXTERIOR UNITS SHALL BE FABRICATED FROM 3/16" 6061-T6 ALUMINUM ALLOY PLATE.
3. ATTACH TO WALL WITH SST ANCHORS, 3/8" DIAMETER MIN, COORDINATE WITH WALL CONSTRUCTION
4. ATTACH TO VERTICAL HANDRAIL OR INDIVIDUAL POST WITHPLATES AND (4) - 3/8" STAINLESS STEEL BOLTS.
5. ATTACH TO STEEL COLUMN WITH (4) - 3/8" ROUND HEAD BOLTS,ONE EACH CORNER. INSERT DOUBLE SPACER NUTS BETWEEN COLUMN AND HOSE RACK.

HOSE RACK

NTS

15205

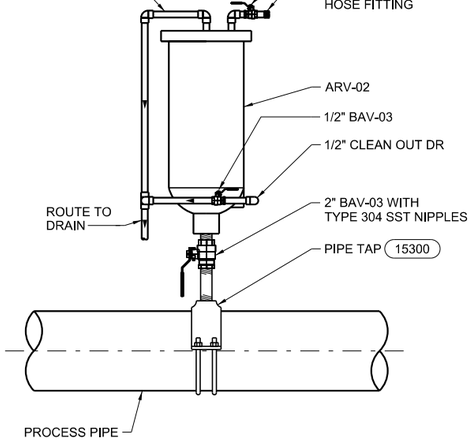

NOTES:

1. PIPING BETWEEN PIPE TAP AND ISOLATION VALVE SHALL BE TYPE 304 SST. ALL OTHER PIPING SHALL BE GALVANIZED STEEL.

AIR RELEASE VALVE INSTALLATION SEWAGE SERVICE

NTS

15231

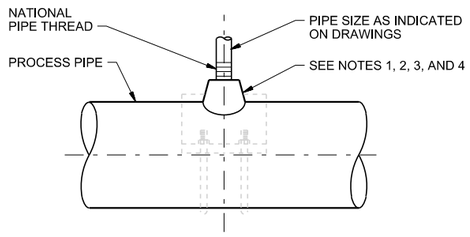

PIPE TAPS

NOTES:

1. FOR STEEL, GALVANIZED STEEL, AND PVC 2 1/2" AND SMALLER USE A BUSHING IN A TEE.
2. FOR DUCTILE IRON, ALL SIZES, USE SERVICE SADDLE.
3. FOR NEW STEEL AND STAINLESS STEEL PIPES 3" AND LARGER, AND PRESSURE VESSELS, USE THRED-O-LET AS SHOWN.
4. FOR EXISTING PVC, STEEL AND STAINLESS STEEL PIPES 3" AND LARGER, USE SERVICE SADDLE.

PIPE TAPS

NTS

15300

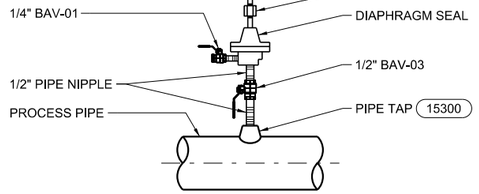

DIAPHRAGM SEAL INSTALLATION

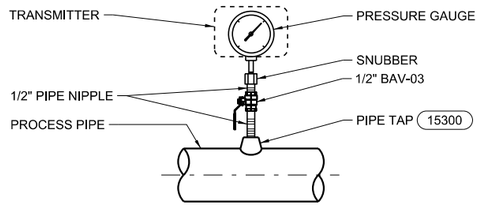

DIRECT INSTALLATION

NOTES:

1. USE DIRECT INSTALLATION FOR POTABLE WATER, RAW WATER, RECLAIMED WATER AND AIR PROCESS PIPING.
2. USE DIAPHRAGM SEAL INSTALLATION FOR SEWAGE, SLUDGE, CHEMICAL AND ALL PROCESS PIPES THAT ARE NOT WATER OR AIR.
3. ALL PIPE NIPPLES TO BE TYPE 304 STAINLESS STEEL.
4. FOR MULTIPLE INSTRUMENTS, PROVIDE TEE, PIPE NIPPLES AND ELBOWS AS REQUIRED IN INSTRUMENT LOCATION.

PRESSURE GAUGE OR TRANSMITTER INSTALLATION

NTS

15310

DESIGNED K ALACON
DRAWN J MARTIN
CHECKED K ALACON
APPROVED M FISHER

WATERWORKS ENGINEERS
2290 Douglas Blvd., Suite 105 • Roseville, CA 95661 • 916-780-2888

CITY OF MORRO BAY
WATER RECLAMATION FACILITY
LIFT STATIONS AND OFFSITE PIPELINES

STANDARD DETAILS

STANDARD DETAILS

REGISTERED PROFESSIONAL ENGINEER
KRISTINA P. ALACON
No. C70952
CIVIL
STATE OF CALIFORNIA
05-29-2020

DATE MAY 2020
PROJECT NUMBER 17-082
DRAWING NUMBER SD-14
SHEET NUMBER 228

FILENAME: 1782D-SD801.dgn PLOT DATE: 5/23/2020 11:17:11 AM

CONFORMED SET - DEC 2020

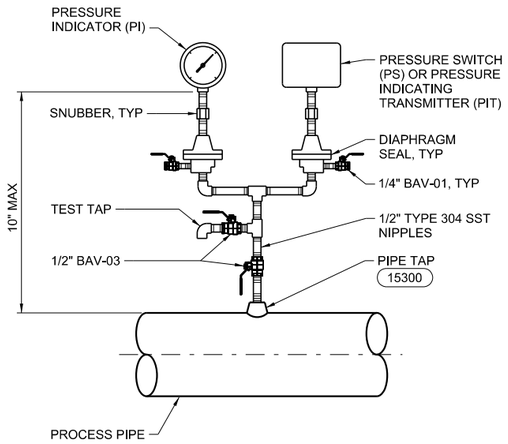

DIRECT MOUNTING WITH DIAPHRAGM SEAL

PRESSURE SWITCH AND INDICATOR INSTALLATION

NTS

15313

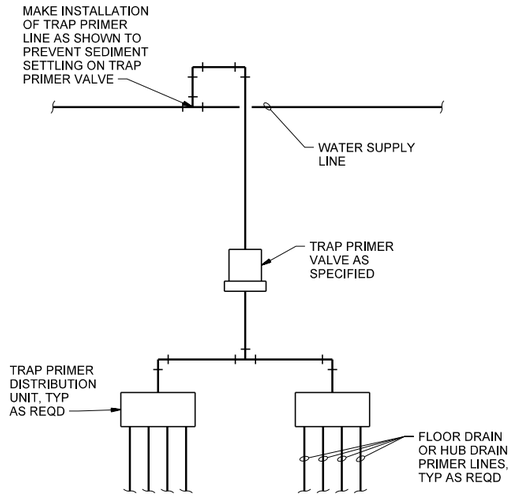

FLOOR DRAIN TRAP PRIMER VALVE

NTS

15401

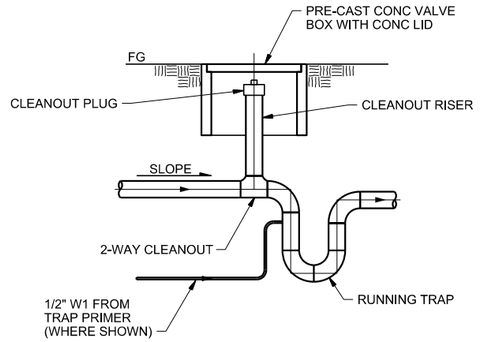

BUILDING TRAP

NTS

15410

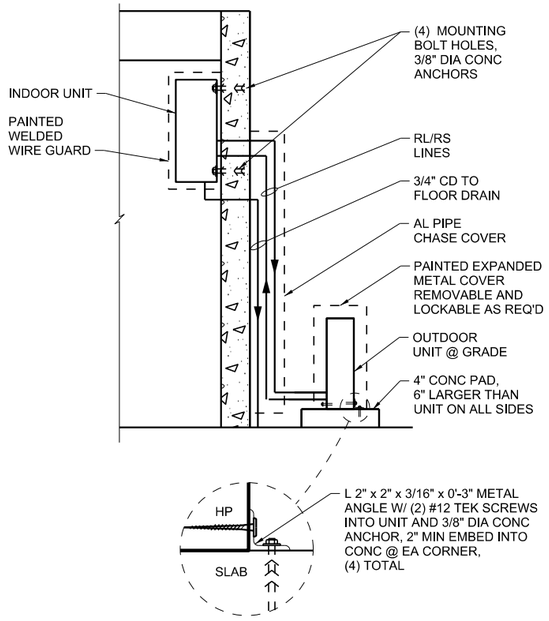

DUCTLESS WALL MOUNTED SPLIT-SYSTEM HEAT PUMP

NTS

15515

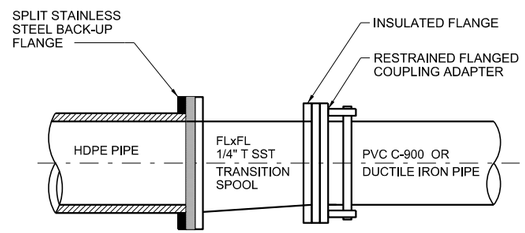

NOTES:

1. PIPE SIZES, MATERIALS AND DIMENSION RATIO (DR) OR PIPE WALL THICKNESS PER DRAWINGS AND SPECIFICATIONS. HDPE IS GENERALLY AT LEAST ONE PIPE SIZE LARGER THAN C-900 OR DUCTILE IRON PIPE.
2. MAKE FINAL CUT ON HDPE AND PVC C-900 OR DUCTILE IRON PIPE AND MAKE CONNECTION WHEN HDPE PIPE AND PVC C-900 ARE AT THEIR COOLEST TEMPERATURES.
3. PROVIDE INSULATING FLANGE AND INSULATING BOLT SLEEVES WASHER FOR ALL SST TO DIP OR PVC CONNECTIONS.
4. PROVIDE SMOOTH TRANSITION FROM ID OF HDPE TO ID OF DIP. MATCH CROWNS.

HDPE TRANSITION TO PVC C-900 OR DUCTILE IRON PIPE

NTS

15850

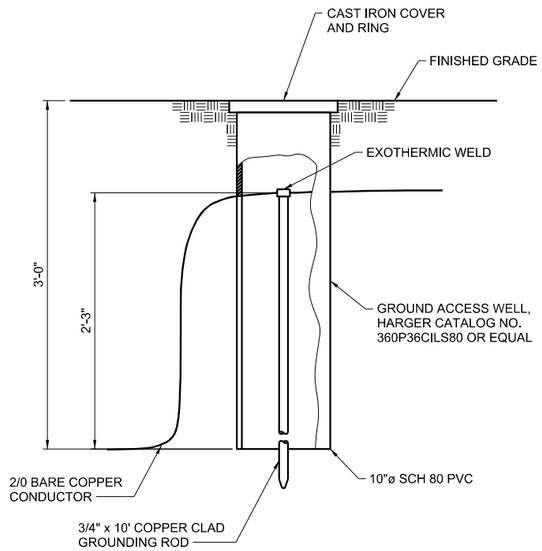

GROUND ROD WITH TEST WELL

NTS

16410

DESIGNED T FRISCH
DRAWN J MARTIN
CHECKED T FRISCH
APPROVED M FISHER

WATERWORKS ENGINEERS
2290 Douglas Blvd., Suite 105 • Roseville, CA 95661 • 916-780-2888

CITY OF MORRO BAY
WATER RECLAMATION FACILITY
LIFT STATIONS AND OFFSITE PIPELINES

STANDARD DETAILS

STANDARD DETAILS

REGISTERED PROFESSIONAL ENGINEER
KRISTINA P. ASHENDEN
No. C70952
CIVIL
STATE OF CALIFORNIA
05-29-2020

DATE MAY 2020
PROJECT NUMBER 17-082
DRAWING NUMBER SD-15
SHEET NUMBER 229

FILENAME: 1782D-SD801.dgn PLOT DATE: 6/2/2020 7:38:46 AM

CONFORMED SET - DEC 2020

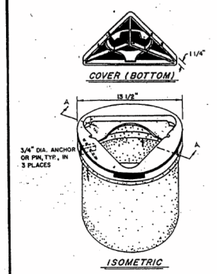



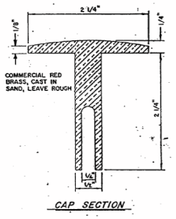

NOTES:
1. Engineer or surveyor setting the monument shall indicate exact point by marking a cross on the cap. He shall also stamp his license type and number.
2. Monument well to be Brooks Products No. 4TT or equal.
3. Cover shall be marked "MONUMENT".

APPROVED-CITY ENGINEER	DATE	CITY OF MORRO BAY DEPARTMENT OF PUBLIC WORKS	STANDARD MONUMENT
	10-5-87		SCALE: NONE M-1
REVISIONS	BY APP DATE		

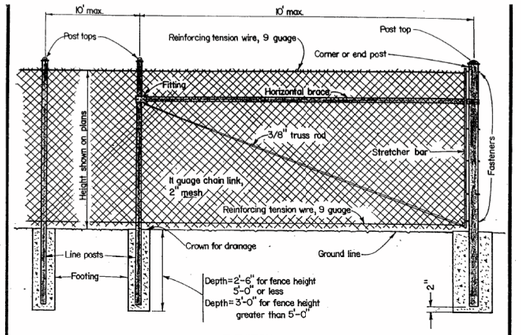

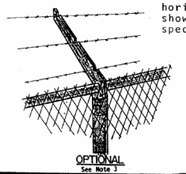

NOTES:
1. Concrete for footings shall have a minimum 2500 psi compressive strength in 28 days.
2. Diameter of post footings shall be 4 times outside diameter of post.
3. Barbed wire, extension arm, and/or top horizontal rail shall be installed only when shown on the plans and/or called for in the special conditions.

APPROVED-CITY ENGINEER	DATE	CITY OF MORRO BAY DEPARTMENT OF PUBLIC WORKS	CHAIN LINK FENCE
	10-5-87		SCALE: AS SHOWN M-4
REVISIONS	BY APP DATE		

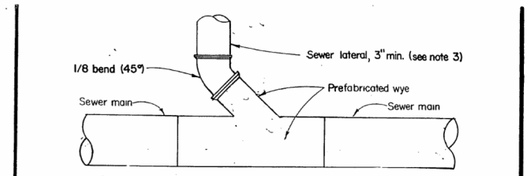

NOTES:
1. Sewer main shall be cut, and prefabricated wye installed; no saddle tape.
2. Lateral may be cast iron, ductile iron, V.C., PVC, or ABS sched. 40 pipe. Cast iron shall be used when cover over lateral is less than 36".
3. Lateral sizes to be determined by Community Development Department.
4. Sewer lateral and water service connection shall not be in same trench unless provisions of Section 1106 of the Uniform Plumbing Code are adhered to.
5. If minimum clearance of 1'-0" from water main cannot be obtained, Public Works Dept. shall determine joint spacing and lateral material. In the event a sewer lateral passes over a water main said main shall be exposed to determine clearance.
6. Trench backfill shall be select sand or sandy loam as approved by City Engineer.

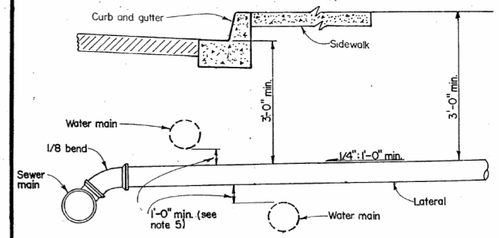

APPROVED-CITY ENGINEER	DATE	CITY OF MORRO BAY DEPARTMENT OF PUBLIC WORKS	SEWER MAIN CONNECTION
	10-5-87		SCALE: NONE S-1
REVISIONS	BY APP DATE		

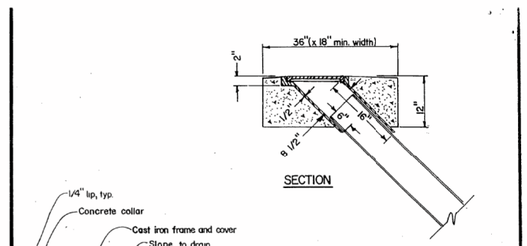

NOTES:
1. Flushing branch (cleanout) shall be K.P. Foundrys model No. 2615 cast iron frame and model No. 3615 cast iron cover, or approved equals. Cover to be marked "SEWER".
2. Prefab. wye shall be same material as sewer main. If sewer main and wye are clay, bell on wye shall be snapped off and appropriate couplings shall be used to connect wye and PVC riser.
3. Concrete for collar shall have a minimum 2500 psi compressive strength in 28 days.

APPROVED-CITY ENGINEER	DATE	CITY OF MORRO BAY DEPARTMENT OF PUBLIC WORKS	SEWER FLUSHING BRANCH (CLEANOUT)
	10-5-87		SCALE: NONE S-2
REVISIONS	BY APP DATE		

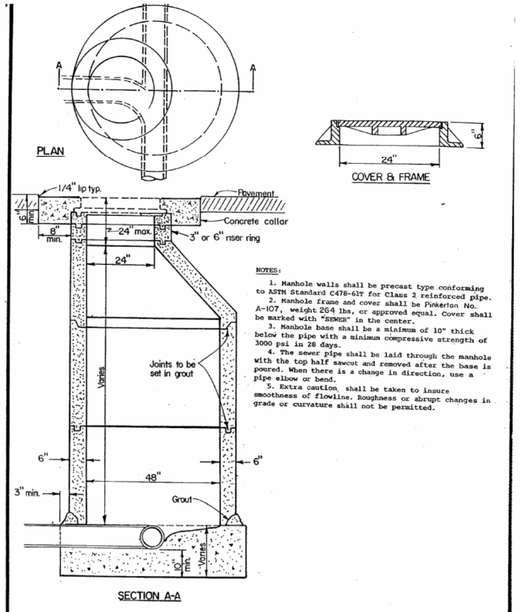

NOTES:
1. Manhole walls shall be precast type conforming to ASTM Standard C478-61T for Class 2 reinforced pipe.
2. Manhole frame and cover shall be Pinkerton No. A-107, weight 264 lbs, or approved equal. Cover shall be marked with "SEWER" in the center.
3. Manhole base shall be a minimum of 10" thick below the pipe with a minimum compressive strength of 3000 psi in 28 days.
4. The sewer pipe shall be laid through the manhole with the top half sawcut and removed after the base is poured. When there is a change in direction, use a pipe elbow or bend.
5. Extra caution shall be taken to insure smoothness of flowline. Roughness or abrupt changes in grade or curvature shall not be permitted.

APPROVED-CITY ENGINEER	DATE	CITY OF MORRO BAY DEPARTMENT OF PUBLIC WORKS	ECCENTRIC-CONE PRECAST CONCRETE MANHOLE (TYPICAL)
	10-5 87		SCALE: NONE S-3
REVISIONS	BY APP DATE		

DESIGNED K ALACON
DRAWN J MARTIN
CHECKED K ALACON
APPROVED M FISHER

WATERWORKS ENGINEERS
2290 Douglas Blvd., Suite 105 • Roseville, CA 95661 • 916-780-2888

CITY OF MORRO BAY
WATER RECLAMATION FACILITY
LIFT STATIONS AND OFFSITE PIPELINES

STANDARD DETAILS

STANDARD DETAILS

REGISTERED PROFESSIONAL ENGINEER
KRISTINA P. ALACON
No. C70952
CIVIL
STATE OF CALIFORNIA
05-29-2020

DATE: MAY 2020
PROJECT NUMBER: 17-082
DRAWING NUMBER: SD-16
SHEET NUMBER: 230

CONFORMED SET - DEC 2020

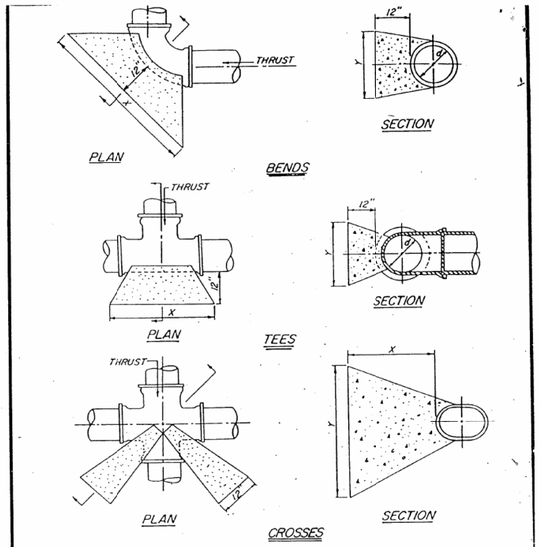

NOTES:

1. This detail for 6" and 8" mains only. Thrust blocks for larger mains shall be engineered and submitted to the City Engineer for approval.
2. All thrust blocks shall be poured against undisturbed soil.
3. All concrete shall have a minimum 2500 psi compressive strength in 28 days.
4. Dimensions shown are minimum.

	SOIL TYPE CLAY	SOIL TYPE SANDY
6" i.d.	X=3'-6" Y=2'-0"	2'-0" 1'-6"
	SQ.FT=7.0	3.5
8" i.d.	X=4'-4" Y=3'-0"	3'-3" 2'-0"
	SQ.FT=13.0	6.5

APPROVED-CITY ENGINEER	DATE	CITY OF MORRO BAY DEPARTMENT OF PUBLIC WORKS	THRUST BLOCKING
REVISIONS	BY / APP / DATE		SCALE: NONE W-2

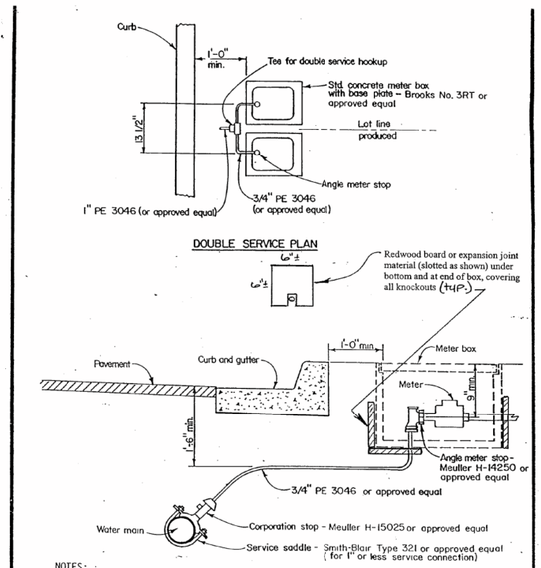

NOTES:

1. Concrete meter box shall have traffic cover when located in travelled way or any portion of driveway approach.
2. Meter box shall have base plate.
3. City of Morro Bay shall install meters and meter boxes for residential developments of two (2) families or less. For all other developments meters and meter boxes shall be installed by developer.

APPROVED-CITY ENGINEER	DATE	CITY OF MORRO BAY DEPARTMENT OF PUBLIC WORKS	WATER SERVICE CONNECTION
REVISIONS	BY / APP / DATE		SCALE: NONE W-3
Redwood Blocks	EP	5/10/99	

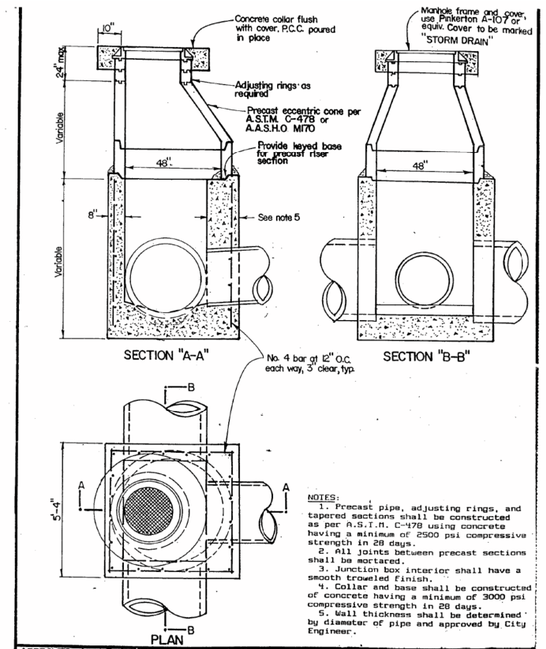

NOTES:

1. Precast pipe, adjusting rings, and tapered sections shall be constructed as per A.S.T.M. C-478 using concrete having a minimum of 2500 psi compressive strength in 28 days.
2. All joints between precast sections shall be mortared.
3. Junction box interior shall have a smooth troweled finish.
4. Collar and base shall be constructed of concrete having a minimum of 3000 psi compressive strength in 28 days.
5. Wall thickness shall be determined by diameter of pipe and approved by City Engineer.

APPROVED-CITY ENGINEER	DATE	CITY OF MORRO BAY DEPARTMENT OF PUBLIC WORKS	STORM DRAIN JUNCTION BOX
REVISIONS	BY / APP / DATE		SCALE: NONE C-9

DESIGNED K ALACON
DRAWN J MARTIN
CHECKED K ALACON
APPROVED M FISHER

WATERWORKS ENGINEERS
2260 Douglas Blvd., Suite 105 • Roseville, CA 95661 • 916-780-2888

CITY OF MORRO BAY
WATER RECLAMATION FACILITY
LIFT STATIONS AND OFFSITE PIPELINES

STANDARD DETAILS

STANDARD DETAILS

REGISTERED PROFESSIONAL ENGINEER KRISTINA P. ALACON No. C70952 CIVIL STATE OF CALIFORNIA
05-29-2020

DATE MAY 2020
PROJECT NUMBER 17-082
DRAWING NUMBER SD-17
SHEET NUMBER 231

FILENAME: 1782D-SD801.dgn PLOT DATE: 5/23/2020 11:22:44 AM