WATER RECLAMATION FACILITY

FOR THE CITY OF:

MORRO BAY, CA

PREPARED BY:

JOINT VENTURE

FILANC | BLACK & VEATCH



EXISTING MORRO BAY-CAYUCOS WASTEWATER TREATMENT PLANT

PROPOSED MORRO BAY WATER RECLAMATION FACILITY PARCEL



60% SUBMITTAL - NOT FOR CONSTRUCTION

NO.	BY	CHK	APP	DATE	REVISIONS AND RECORD OF USE
B	KEZ	RT	EVB	7/30/2019	60% SUBMITTAL
A	KEZ	RWF	EVB	3/5/2019	30% SUBMITTAL

BLACK & VEATCH | JOINT VENTURE | FILANC

CITY OF MORRO BAY
MORRO BAY WATER RECLAMATION FACILITY (WRF)

GENERAL COVER SHEET

DESIGNED:	EVB, KEZ
DETAILED:	MAK
CHECKED:	
APPROVED:	
DATE:	

0 1/2 1

IF THIS BAR DOES NOT MEASURE 1" THEN DRAWING IS NOT TO FULL SCALE

PROJECT NO. 400530

00-G-001

SHEET OF

D400530
FD81203_PW

GENERAL

SHEET NO.	DRAWING NO.	DESCRIPTION
1	00-G-001	GENERAL; COVER SHEET
2	00-G-002	GENERAL; SHEET LIST 1
3	00-G-003	GENERAL; SHEET LIST 2
4	00-G-004	GENERAL; ABBREVIATIONS
5	00-G-005	GENERAL; LEGEND
6	00-G-006	GENERAL; PROCESS SCHEMATIC
7	00-G-007	GENERAL; HYDRAULIC PROFILES
8	00-G-008	GENERAL; CODE CLASSIFICATION TABLE
9	00-G-009	GENERAL; POTABLE AND RECYCLED WATER SCHEMATIC
10	00-G-010	GENERAL; GENERAL NOTES 1
11	00-G-011	GENERAL; GENERAL NOTES 2

CIVIL

SHEET NO.	DRAWING NO.	DESCRIPTION
12	10-C-001	SITE - OVERALL; EXISTING SITE GRADE AND FEATURES
13	10-C-002	SITE - OVERALL; SITE PREPARATION FINISHED GRADE OVERVIEW
14	10-C-003	SITE - OVERALL; ESTIMATED DEPTH FROM EXISTING GRADE TO BEDROCK
15	10-C-004	SITE - OVERALL; ESTIMATED DEPTH FROM SITE PREP GRADE TO BEDROCK
16	10-C-005	SITE - OVERALL; ESTIMATED DEPTH FROM SITE PREP GRADE TO EXISTING GRADE
17	10-C-006	SITE - OVERALL; SITE PREPARATION GRADING AND DRAINAGE KEY PLAN
18	10-C-101	SITE - AREA 1; SITE PREPARATION GRADING AND DRAINAGE PLAN
19	10-C-102	SITE - AREA 2; SITE PREPARATION GRADING AND DRAINAGE PLAN
20	10-C-103	SITE - AREA 3; SITE PREPARATION GRADING AND DRAINAGE PLAN
21	10-C-104	SITE - AREA 4; SITE PREPARATION GRADING AND DRAINAGE PLAN
22	10-C-301	SITE - OVERALL; SITE PREPARATION SECTIONS 1
23	10-C-302	SITE - OVERALL; SITE PREPARATION SECTIONS 2
24	10-C-501	SITE - OVERALL; SITE PREPARATION DETAILS 1
25	10-C-502	SITE - OVERALL; SITE PREPARATION DETAILS 2
26	11-C-001	SITE - OVERALL, GRADING AND PAVING KEY PLAN
27	11-C-002	SITE - OVERALL, GRADING AND PAVING OVERVIEW
28	11-C-101	SITE - ACCESS ROAD AREA, GRADING AND PAVING PLAN
29	11-C-102	SITE - SOUTH OPERATIONS AREA, GRADING AND PAVING PLAN
30	11-C-103	SITE - NORTH OPERATIONS AREA, GRADING AND PAVING PLAN
31	11-C-104	SITE - SOUTH PROCESS AREA, GRADING AND PAVING PLAN
32	11-C-105	SITE - NORTH PROCESS AREA, GRADING AND PAVING PLAN
33	11-C-301	SITE - OVERALL; GRADING AND PAVING SECTIONS AND DETAILS 1
34	11-C-302	SITE - OVERALL; GRADING AND PAVING SECTIONS AND DETAILS 2
35	11-C-303	SITE - OVERALL; GRADING AND PAVING SECTIONS AND DETAILS 3
36	11-C-304	SITE - OVERALL; GRADING AND PAVING SECTIONS AND DETAILS 4
37	12-C-001	SITE - OVERALL; PIPING KEY PLAN
38	12-C-101	SITE - SOUTH OPERATIONS AREA; PIPING PLAN
39	12-C-102	SITE - NORTH OPERATIONS AREA; PIPING PLAN
40	12-C-103	SITE - SOUTH PROCESS AREA; PIPING PLAN
41	12-C-104	SITE - NORTH PROCESS AREA; PIPING PLAN
42	12-C-301	SITE - OVERALL; PIPING SECTIONS AND DETAILS 1
43	12-C-302	SITE - OVERALL; PIPING SECTIONS AND DETAILS 2
44	12-C-303	SITE - OVERALL; PIPING SECTIONS AND DETAILS 3
45	12-C-501	SITE - OVERALL; PIPING DETAILS 1
46	12-C-502	SITE - OVERALL; PIPING DETAILS 2
47	12-C-503	SITE - OVERALL; PIPING DETAILS 3
48	13-C-101	SITE - WASH RACK; PLAN, SECTION, AND DETAILS
49	14-C-101	SITE - WRF PARKING CANOPY; PLAN, SECTION, AND DETAILS
50	15-C-101	SITE - WATER AND COLLECTION VEHICLES EQUIPMENT STORAGE; PLAN, SECTIONS, AND DETAILS
51	16-C-101	SITE - WATER AND COLLECTION SUPPLIES STORAGE; PLAN, SECTIONS, AND DETAILS
52	17-C-101	SITE - OUTDOOR STORAGE AISLES; PLAN, SECTIONS, AND DETAILS
53	18-C-101	SITE - PLANT SEWER LIFT STATION; PLAN, SECTIONS, AND DETAILS
54	19-C-101	SITE - MISCELLANEOUS YARD STRUCTURES; PLANS, SECTION, AND DETAILS 1
55	19-C-102	SITE - MISCELLANEOUS YARD STRUCTURES; PLANS, SECTION, AND DETAILS 2
56	19-C-401	SITE - ELECTRICAL AREA; ENLARGED PLAN

LANDSCAPE

SHEET NO.	DRAWING NO.	DESCRIPTION
57	10-L-001	SITE - OVERALL; LANDSCAPING COVER SHEET
58	10-L-101	SITE - SOUTH OPERATIONS AREA; LANDSCAPING PLAN
59	10-L-102	SITE - NORTH OPERATIONS AREA; LANDSCAPING PLAN
60	10-L-103	SITE - SOUTH PROCESS AREA; LANDSCAPING PLAN
61	10-L-104	SITE - NORTH PROCESS AREA; LANDSCAPING PLAN
62	10-L-501	SITE - OVERALL; LANDSCAPING DETAILS
63	11-L-111	SITE - SOUTH OPERATIONS AREA; IRRIGATION PLAN
64	11-L-112	SITE - NORTH OPERATIONS AREA; IRRIGATION PLAN
65	11-L-113	SITE - SOUTH PROCESS AREA; IRRIGATION PLAN
66	11-L-114	SITE - NORTH PROCESS AREA; IRRIGATION PLAN
67	11-L-511	SITE - OVERALL; IRRIGATION DETAILS
68	11-L-512	SITE - OVERALL; IRRIGATION DETAILS

CIVIL MECHANICAL

SHEET NO.	DRAWING NO.	DESCRIPTION
69	00-M-501	GENERAL; CIVIL MECHANICAL COMMON DETAILS 1
70	00-M-502	GENERAL; CIVIL MECHANICAL COMMON DETAILS 2
71	00-M-503	GENERAL; CIVIL MECHANICAL COMMON DETAILS 3
72	00-M-504	GENERAL; CIVIL MECHANICAL COMMON DETAILS 4
73	00-M-505	GENERAL; CIVIL MECHANICAL COMMON DETAILS 5
74	20-M-001	HEADWORKS AREA - OVERALL; 3D VIEWS
75	20-M-101	HEADWORKS AREA - OVERALL; OPERATING LEVEL PLAN
76	20-M-301	HEADWORKS AREA - OVERALL; SECTIONS
77	21-M-101	HEADWORKS AREA - HEADWORKS; PLAN
78	21-M-301	HEADWORKS AREA - HEADWORKS; SECTIONS AND DETAILS 1
79	21-M-302	HEADWORKS AREA - HEADWORKS; SECTIONS AND DETAILS 2
80	22-M-101	HEADWORKS AREA - FINE SCREENS; PLAN
81	22-M-301	HEADWORKS AREA - FINE SCREENS; SECTIONS AND DETAILS 1
82	23-M-101	HEADWORKS AREA - ODOR CONTROL; PLAN, SECTIONS, AND DETAILS
83	24-M-101	HEADWORKS AREA - VACTOR WASHDOWN AREA; 3D VIEWS
84	24-M-301	HEADWORKS AREA - VACTOR WASHDOWN AREA; PLAN, SECTIONS AND DETAILS
85	30-M-001	TREATMENT AREA - OVERALL; 3D VIEWS
86	30-M-101	TREATMENT AREA - OVERALL; OPERATING LEVEL PLAN
87	30-M-301	TREATMENT AREA - OVERALL; SECTIONS AND DETAILS
88	31-M-101	TREATMENT AREA - BNR BASINS; OPERATING LEVEL PLAN
89	31-M-102	TREATMENT AREA - BNR BASINS; LOWER LEVEL PLAN
90	31-M-301	TREATMENT AREA - BNR BASINS; SECTIONS AND DETAILS 1
91	31-M-302	TREATMENT AREA - BNR BASINS; SECTIONS AND DETAILS 2
92	32-M-101	TREATMENT AREA - MBR SYSTEM; OPERATING LEVEL PLAN
93	32-M-301	TREATMENT AREA - MBR SYSTEM; SECTIONS
94	32-M-302	TREATMENT AREA - MBR SYSTEM; SECTIONS 2
95	33-M-101	TREATMENT AREA - RO FEED TANKS; PLAN, SECTIONS, AND DETAILS
96	34-M-101	TREATMENT AREA - ONSITE RECYCLE PUMPS; PLAN, SECTIONS, AND DETAILS
97	50-M-001	RO/UV BUILDING - OVERALL; 3D VIEWS
98	50-M-101	RO/UV BUILDING - OVERALL; OPERATING LEVEL PLAN
99	50-M-301	RO/UV BUILDING - OVERALL; SECTIONS
100	51-M-101	RO/UV BUILDING - RO SYSTEM; MEMBRANE RACKS PLAN
101	51-M-102	RO/UV BUILDING - RO SYSTEM; CIP & FLUSH SYSTEMS PLAN
102	51-M-301	RO/UV BUILDING - RO SYSTEM; SECTIONS AND DETAILS 1
103	51-M-302	RO/UV BUILDING - RO SYSTEM; SECTIONS AND DETAILS 2
104	51-M-303	RO/UV BUILDING - RO SYSTEM; SECTIONS AND DETAILS 3
105	52-M-101	RO/UV BUILDING - UV SYSTEM; REACTOR SYSTEM PLAN
106	52-M-301	RO/UV BUILDING - UV SYSTEM; SECTIONS AND DETAILS 1
107	52-M-302	RO/UV BUILDING - UV SYSTEM; SECTIONS AND DETAILS 2
108	60-M-001	PRODUCT WATER AREA - OVERALL; 3D VIEWS
109	60-M-101	PRODUCT WATER AREA - OVERALL; OPERATING LEVEL PLAN
110	61-M-101	PRODUCT WATER AREA - CALCITE CONTACTOR; PLAN
111	61-M-301	PRODUCT WATER AREA - CALCITE CONTACTOR; SECTIONS AND DETAILS
112	62-M-101	PRODUCT WATER AREA - PRODUCT WATER STORAGE TANK; PLAN, SECTIONS, AND DETAILS
113	63-M-101	PRODUCT WATER AREA - IPR PRODUCT WATER PUMP STATION; PLAN
114	63-M-301	PRODUCT WATER AREA - IPR PRODUCT WATER PUMP STATION; SECTIONS & DETAILS 1
115	64-M-101	PRODUCT WATER AREA - OUTFALL PUMP STATION; PLAN
116	64-M-301	PRODUCT WATER AREA - OUTFALL PUMP STATION; SECTIONS & DETAILS 1
117	65-M-101	PRODUCT WATER AREA - DISINFECTION PIPELINE CONTACTOR; PLAN, SECTIONS, AND DETAILS
118	65-M-102	PRODUCT WATER AREA - DECHLORINATION FACILITY; PLAN, SECTIONS, AND DETAILS
119	70-M-001	RESIDUALS AREA - OVERALL; 3D VIEWS
120	71-M-101	RESIDUALS AREA - SLUDGE HOLDING AND SAFE SETTLE TANKS; OPERATING LEVEL PLAN
121	71-M-102	RESIDUALS AREA - SLUDGE HOLDING AND SAFE SETTLE TANKS; LOWER LEVEL PLAN
122	71-M-301	RESIDUALS AREA - SLUDGE HOLDING AND SAFE SETTLE TANKS; SECTIONS & DETAILS 1
123	71-M-302	RESIDUALS AREA - SLUDGE HOLDING AND SAFE SETTLE TANKS; SECTIONS & DETAILS 2
124	72-M-101	RESIDUALS AREA - DEWATERING FACILITY; PLAN
125	72-M-301	RESIDUALS AREA - DEWATERING FACILITY; SECTIONS & DETAILS 1
126	72-M-302	RESIDUALS AREA - DEWATERING FACILITY; SECTIONS & DETAILS 2
127	73-M-101	RESIDUALS AREA - SAFE FILTER SYSTEM; PLAN, SECTIONS, & DETAILS
128	90-M-001	CHEMICAL FACILITY - OVERALL; 3D VIEWS
129	90-M-101	CHEMICAL FACILITY - OVERALL; PLAN
130	90-M-301	CHEMICAL FACILITY - OVERALL; SECTIONS AND DETAILS 1
131	90-M-302	CHEMICAL FACILITY - OVEARLL; SECTIONS AND DETAILS 2

PROCESS AND INSTRUMENTATION

SHEET NO.	DRAWING NO.	DESCRIPTION
132	00-I-001	P&ID - LEGEND AND ABBREVIATIONS - SHEET 1
133	00-I-002	P&ID - LEGEND AND ABBREVIATIONS - SHEET 2
134	00-I-003	P&ID - LEGEND AND ABBREVIATIONS - SHEET 3
135	00-I-701	NETWORK OVERALL DIAGRAM
136	00-I-702	WIRELESS NETWORK DIAGRAM
137	00-I-703	OFFICE NETWORK AND TELEPHONE SYSTEM
138	00-I-704	SECURITY DIAGRAM
139	00-I-501	INSTALLATION DETAILS 1
140	00-I-502	INSTALLATION DETAILS 2
141	00-I-503	INSTALLATION DETAILS 3
142	00-I-504	INSTALLATION DETAILS 4
143	00-I-505	INSTALLATION DETAILS 5
144	00-I-506	INSTALLATION DETAILS 6
145	21-I-001	HEADWORKS AREA - HEADWORKS; TRAIN 1
146	21-I-002	HEADWORKS AREA - HEADWORKS; TRAIN 2
147	22-I-001	HEADWORKS AREA - FINE SCREENS; SAFE DIVERSION BOX & FINE SCREENS
148	23-I-001	HEADWORKS AREA - ODOR CONTROL; ODOR CONTROL SYSTEM
149	24-I-001	HEADWORKS AREA - VACTOR WASHDOWN AREA; VACTOR WASHDOWN SYSTEM
150	31-I-001	TREATMENT AREA - BNR BASINS; BASIN 1 & RAS DEOX
151	31-I-002	TREATMENT AREA - BNR BASINS; BASIN 2
152	31-I-003	TREATMENT AREA - BNR BASINS; WAS SYSTEM
153	31-I-004	TREATMENT AREA - BNR BASINS; PROCESS AIR BLOWERS
154	32-I-001	TREATMENT AREA - MBR SYSTEM; MEMBRANE BASIN 1
155	32-I-002	TREATMENT AREA - MBR SYSTEM; MEMBRANE BASIN 2
156	32-I-003	TREATMENT AREA - MBR SYSTEM; FILTRATE PUMP, BASIN 1
157	32-I-004	TREATMENT AREA - MBR SYSTEM; FILTRATE PUMP, BASIN 2
158	32-I-005	TREATMENT AREA - MBR SYSTEM; FILTRATE MANIFOLD
159	32-I-006	TREATMENT AREA - MBR SYSTEM; MBR SCOUR AIR BLOWERS
160	32-I-007	TREATMENT AREA - MBR SYSTEM; TANK DRAIN PUMP
161	33-I-001	TREATMENT AREA - RO FEED TANKS; RO FEED TANKS
162	34-I-001	TREATMENT AREA - RECYCLED WATER PUMP STATION; RECYCLED WATER PUMPS
163	51-I-001	RO/UV BUILDING - RO SYSTEM; RO FEED CONDITIONING SYSTEM
164	51-I-002	RO/UV BUILDING - RO SYSTEM; RO CARTRIDGE FILTERS
165	51-I-003	RO/UV BUILDING - RO SYSTEM; RO UNIT 1
166	51-I-004	RO/UV BUILDING - RO SYSTEM; RO UNIT 2
167	51-I-005	RO/UV BUILDING - RO SYSTEM; RO UNIT 3
168	51-I-006	RO/UV BUILDING - RO SYSTEM; RO PERMEATE/CONCENTRATE, UNIT 1
169	51-I-007	RO/UV BUILDING - RO SYSTEM; RO PERMEATE/CONCENTRATE, UNIT 2
170	51-I-008	RO/UV BUILDING - RO SYSTEM; RO PERMEATE/CONCENTRATE, UNIT 3
171	51-I-009	RO/UV BUILDING - RO SYSTEM; RO CIP TANKS
172	51-I-010	RO/UV BUILDING - RO SYSTEM; RO CIP PUMPS
173	51-I-011	RO/UV BUILDING - RO SYSTEM; RO FLUSH SYSTEM
174	52-I-001	RO/UV BUILDING - UV SYSTEM; UV/AOP SYSTEM
175	61-I-001	PRODUCT WATER AREA - CALCITE CONTACTOR; CALCITE REMINERALIZATION SYSTEM
176	62-I-001	PRODUCT WATER AREA - IPR PRODUCT WATER STORAGE TANK; IPR PRODUCT WATER STORAGE TANK
177	63-I-001	PRODUCT WATER AREA - IPR PRODUCT WATER PUMP STATION; IPR PRODUCT WATER PUMPS
178	64-I-001	PRODUCT WATER AREA - OUTFALL PUMP STATION; OUTFALL TANK & PUMPS
179	65-I-001	PRODUCT WATER AREA - DISINFECTION SYSTEM; OUTFALL DISINFECTION SYSTEM
180	71-I-001	RESIDUALS AREA - SLUDGE & SAFE SETTLING TANKS; SLUDGE HOLDING TANKS
181	71-I-002	RESIDUALS AREA - SLUDGE & SAFE SETTLING TANKS; SAFE SETTLE TANK
182	71-I-003	RESIDUALS AREA - SLUDGE & SAFE SETTLING TANKS; SLUDGE HOLDING TANK BLOWERS
183	72-I-001	RESIDUALS AREA - DEWATERING SYSTEM; SLUDGE FEED PUMPS
184	72-I-002	RESIDUALS AREA - DEWATERING SYSTEM; BELT FILTER PRESS
185	73-I-001	RESIDUALS AREA - SAFE FILTER SYSTEM; SAFE SYSTEM
186	81-I-001	MISCELLANEOUS - GENERATOR; GENERATOR SYSTEM
187	90-I-001	CHEMICALS - CHEMICAL FACILITY; SODIUM HYPOCHLORITE STORAGE & FEED 1
188	90-I-002	CHEMICALS - CHEMICAL FACILITY; SODIUM HYPOCHLORITE STORAGE & FEED 2
189	90-I-003	CHEMICALS - CHEMICAL FACILITY; SODIUM HYDROXIDE STORAGE & FEED
190	90-I-004	CHEMICALS - CHEMICAL FACILITY; SODIUM BISULFITE STORAGE & FEED
191	90-I-005	CHEMICALS - CHEMICAL FACILITY; ANTISCALANT STORAGE & FEED
192	90-I-006	CHEMICALS - CHEMICAL FACILITY; CITRIC ACID STORAGE & FEED
193	90-I-007	CHEMICALS - CHEMICAL FACILITY; SULFURIC ACID STORAGE & FEED
194	90-I-008	CHEMICALS - DEWATERING AREA; THICKENING POLYMER STORAGE & FEED
195	95-I-001	OPERATIONS & CONTROL BUILDING - SANITARY SYSTEM; SANITARY LIFT STATION

NO.	BY	CHK	APP
B	KEZ	RT	EVB
A	KEZ	RWF	EVB

DATE	REVISIONS AND RECORD OF USE
7/30/2019	60% SUBMITTAL
3/5/2019	30% SUBMITTAL

BLACK & VEATCH

JOINT VENTURE

BLACK & VEATCH

FILANC

CITY OF MORRO BAY
MORRO BAY WATER
RECLAMATION FACILITY (WRF)

GENERAL
SHEET LIST 1

DESIGNED: EVB, KEZ
DETAILED: MAK
CHECKED:
APPROVED:
DATE:

0 1/2 1

IF THIS BAR DOES NOT MEASURE 1" THEN DRAWING IS NOT TO FULL SCALE

PROJECT NO.
400530

00-G-002
SHEET
OF

60% SUBMITTAL - NOT FOR CONSTRUCTION

D400530
FD81202_PW

STRUCTURAL

SHEET NO.	DRAWING NO.	DESCRIPTION
196	00-S-001	STRUCTURAL GENERAL NOTES 1
197	00-S-002	STRUCTURAL GENERAL NOTES 2
198	00-S-003	SPECIAL INSPECTIONS & STRUCTURAL OBSERVATIONS
199	00-S-101	STRUCTURAL DETAILS 1
200	00-S-102	STRUCTURAL DETAILS 2
201	00-S-103	STRUCTURAL DETAILS 3
202	00-S-104	STRUCTURAL DETAILS 4
203	00-S-105	STRUCTURAL DETAILS 5
204	00-S-106	STRUCTURAL DETAILS 6
206	10-S-001	CORPORATION YARD AREA 3D VIEWS 1
207	10-S-002	CORPORATION YARD AREA 3D VIEWS 2
208	10-S-003	CORPORATION YARD AREA 3D VIEWS 3
209	13-S-101	WASH RACK; PLAN
210	13-S-301	WASH RACK; SECTIONS & DETAILS
211	14-S-101	WRF PARKING CANOPY; PLANS
212	14-S-301	WRF PARKING CANOPY; SECTIONS & DETAILS
213	16-S-101	WATER AND COLLECTION SUPPLIES STORAGE SHED; PLAN
214	16-S-301	WATER AND COLLECTION SUPPLIES STORAGE SHED; SECTIONS & DETAILS
215	17-S-101	OUTDOOR STORAGE AREA; PLAN
216	17-S-301	OUTDOOR STORAGE AREA; SECTIONS & DETAILS
217	20-S-001	HEADWORKS AREA - OVERALL; 3D VIEWS
218	20-S-101	HEADWORKS AREA - OVERALL; PLAN
219	20-S-301	HEADWORKS AREA - OVERALL; SECTIONS & DETAILS 1
220	20-S-302	HEADWORKS AREA - OVERALL; SECTIONS & DETAILS 2
221	24-S-101	HEADWORKS AREA - VACTOR WASHDOWN; PLAN
222	24-S-301	HEADWORKS AREA - VACTOR WASHDOWN; SECTIONS & DETAILS
223	30-S-001	TREATMENT AREA - OVERALL; 3D VIEWS
224	30-S-101	TREATMENT AREA - OVERALL; OPERATING LEVEL PLAN
225	30-S-102	TREATMENT AREA - OVERALL; LOWER PLAN
226	30-S-301	TREATMENT AREA - OVERALL; SECTIONS & DETAILS 1
227	30-S-302	TREATMENT AREA - OVERALL; SECTIONS & DETAILS 2
228	30-S-303	TREATMENT AREA - OVERALL; SECTIONS & DETAILS 3
229	30-S-304	TREATMENT AREA - OVERALL; SECTIONS & DETAILS 4
231	50-S-001	RO/UV BUILDING - OVERALL; 3D VIEWS
232	50-S-101	RO/UV BUILDING - OVERALL; LOWER PLAN
233	50-S-301	RO/UV BUILDING - OVERALL; SECTIONS & DETAILS 1
234	50-S-302	RO/UV BUILDING - OVERALL; SECTIONS & DETAILS 2
235	60-S-001	PRODUCT WATER AREA - OVERALL; 3D VIEWS 1
236	60-S-002	PRODUCT WATER AREA - OVERALL; 3D VIEWS 2
237	61-S-101	PRODUCT WATER AREA - CALCITE CONTACTOR; PLAN
238	61-S-301	PRODUCT WATER AREA - CALCITE CONTACTOR; SECTIONS & DETAILS
239	62-S-101	PRODUCT WATER AREA - IPR PRODUCT WATER STORAGE TANK; PLAN
240	62-S-301	PRODUCT WATER AREA - IPR PRODUCT WATER STORAGE TANK; SECTIONS & DETAILS
241	63-S-101	PRODUCT WATER AREA - IPR PRODUCT WATER PUMP STATION; PLAN
242	63-S-301	PRODUCT WATER AREA - IPR PRODUCT WATER PUMP STATION; SECTIONS & DETAILS
243	64-S-301	PRODUCT WATER AREA - OUTFALL PUMP STATION; PLAN
244	64-S-302	PRODUCT WATER AREA - OUTFALL PUMP STATION; SECTIONS & DETAILS
245	65-S-101	PRODUCT WATER - DISINFECTION DISINFECTION SYSTEM; PLAN
246	65-S-301	PRODUCT WATER - DISINFECTION DISINFECTION SYSTEM; SECTIONS & DETAILS
247	70-S-001	RESIDUALS AREA - OVERALL; 3D VIEWS
248	71-S-101	RESIDUALS AREA - SLUDGE HOLDING TANKS & SAFE SETTLE TANK; PLAN
249	71-S-301	RESIDUALS AREA - SLUDGE HOLDING TANKS & SAFE SETTLE TANK; SECTIONS & DETAILS 1
250	71-S-302	RESIDUALS AREA - SLUDGE HOLDING TANKS & SAFE SETTLE TANK; SECTIONS & DETAILS 2
252	72-S-101	RESIDUALS AREA - DEWATERING FACILITY; PLAN
253	72-S-301	RESIDUALS AREA - DEWATERING FACILITY; SECTIONS & DETAILS 1
254	72-S-302	RESIDUALS AREA - DEWATERING FACILITY; SECTIONS & DETAILS 2
256	73-S-101	RESIDUALS AREA - SAFE FILTER SYSTEM; PLAN
257	73-S-301	RESIDUALS AREA - SAFE FILTER SYSTEM; SECTIONS & DETAILS
258	80-S-001	ELECTRICAL BUILDING - OVERALL; 3D VIEWS
259	80-S-101	ELECTRICAL BUILDING - OVERALL; PLAN
260	80-S-301	ELECTRICAL BUILDING - OVERALL; SECTIONS & DETAILS 1
261	80-S-302	ELECTRICAL BUILDING - OVERALL; SECTIONS & DETAILS 2
262	81-S-101	EMERGENCY POWER FACILITY - OVERALL; PLAN
263	81-S-301	EMERGENCY POWER FACILITY - OVERALL; SECTIONS & DETAILS 1
264	81-S-302	EMERGENCY POWER FACILITY - OVERALL; SECTIONS & DETAILS 2
265	90-S-001	CHEMICALS - CHEMICAL FACILITY; 3D VIEWS
266	90-S-101	CHEMICALS - CHEMICAL FACILITY; PLAN
267	90-S-301	CHEMICALS - CHEMICAL FACILITY; SECTIONS & DETAILS 1
268	90-S-302	CHEMICALS - CHEMICAL FACILITY; SECTIONS & DETAILS 2
269	90-S-303	CHEMICALS - CHEMICAL FACILITY; SECTIONS & DETAILS 3
270	95-S-001	OPERATIONS BUILDING; 3D VIEWS
271	95-S-101	OPERATIONS BUILDING; PLAN
272	95-S-301	OPERATIONS BUILDING; SECTIONS & DETAILS 1
273	95-S-302	OPERATIONS BUILDING; SECTIONS & DETAILS 2
274	95-S-303	OPERATIONS BUILDING; SECTIONS & DETAILS 3
275	95-S-304	OPERATIONS BUILDING; SECTIONS & DETAILS 4
276	96-S-001	MAINTENANCE BUILDING; 3D VIEWS
277	96-S-101	MAINTENANCE BUILDING; PLAN
278	96-S-301	MAINTENANCE BUILDING; SECTIONS & DETAILS 1
279	96-S-302	MAINTENANCE BUILDING; SECTIONS & DETAILS 2
280	96-S-303	MAINTENANCE BUILDING; SECTIONS & DETAILS 3
281	96-S-304	MAINTENANCE BUILDING; SECTIONS & DETAILS 4

ARCHITECTURAL

SHEET NO.	DRAWING NO.	DESCRIPTION
282	00-A-001	ARCHITECTURAL GENERAL NOTES 1
283	00-A-001	ARCHITECTURAL DETAILS 1
284	00-A-002	ARCHITECTURAL DETAILS 2
285	00-A-003	ARCHITECTURAL DETAILS 3
286	00-A-004	ARCHITECTURAL DETAILS 4
287	00-A-005	ARCHITECTURAL DETAILS 5
288	00-A-006	ARCHITECTURAL DETAILS 6
289	00-A-007	ARCHITECTURAL DETAILS 7
290	00-A-008	ARCHITECTURAL DETAILS 8
291	00-A-009	ARCHITECTURAL DETAILS 9
292	00-A-010	ARCHITECTURAL DETAILS 10
293	00-A-011	ARCHITECTURAL DETAILS 11
294	00-A-012	ARCHITECTURAL DETAILS 12
295	00-A-013	ARCHITECTURAL DETAILS 13
296	10-A-001	CORPORATION YARD AREA; 3D VIEW 1
297	10-A-002	CORPORATION YARD AREA; 3D VIEW 2
298	10-A-003	CORPORATION YARD AREA; 3D VIEW 3
299	14-A-101	WRF PARKING CANOPY; PLAN
300	14-A-301	WRF PARKING CANOPY; SECTIONS & DETAILS
301	16-A-001	WATER AND COLLECTION SUPPLIES STORAGE SHED; PERSPECTIVES
302	16-A-002	WATER AND COLLECTION SUPPLIES STORAGE SHED; ENERGY CODE COMPLIANCE 1
303	16-A-003	WATER AND COLLECTION SUPPLIES STORAGE SHED; ENERGY CODE COMPLIANCE 2
304	16-A-101	WATER AND COLLECTION SUPPLIES STORAGE SHED; LIFE SAFETY PLAN
305	16-A-102	WATER AND COLLECTION SUPPLIES STORAGE SHED; OPERATING FLOOR PLAN
306	16-A-103	WATER AND COLLECTION SUPPLIES STORAGE SHED; ROOF PLAN
307	16-A-201	WATER AND COLLECTION SUPPLIES STORAGE SHED; BUILDING ELEVATIONS
308	16-A-301	WATER AND COLLECTION SUPPLIES STORAGE SHED; SECTIONS & DETAILS
309	17-A-101	PERMANENT OPEN STORAGE; PLANS
310	17-A-301	PERMANENT OPEN STORAGE; SECTIONS & DETAILS
311	50-A-001	RO/UV BUILDING; PERSPECTIVES
312	50-A-002	RO/UV BUILDING; ENERGY CODE COMPLIANCE 1
313	50-A-003	RO/UV BUILDING; ENERGY CODE COMPLIANCE 2
314	50-A-101	RO/UV BUILDING; LIFE SAFETY PLAN
315	50-A-102	RO/UV BUILDING; OPERATING FLOOR PLAN
316	50-A-103	RO/UV BUILDING; ROOF PLAN
317	50-A-201	RO/UV BUILDING; BUILDING ELEVATIONS 1
318	50-A-202	RO/UV BUILDING; BUILDING ELEVATIONS 2
319	50-A-301	RO/UV BUILDING; WALL SECTIONS 1
320	50-A-302	RO/UV BUILDING; WALL SECTIONS 2
321	50-A-303	RO/UV BUILDING; WALL SECTIONS 3
322	50-A-601	RO/UV BUILDING; SCHEDULES
323	70-A-001	RESIDUALS AREA; PERSPECTIVES
324	72-A-101	RESIDUALS AREA - DEWATERING FACILITY; OPERATING FLOOR PLAN
325	72-A-102	RESIDUALS AREA - DEWATERING FACILITY; ROOF PLAN
326	72-A-201	RESIDUALS AREA - DEWATERING FACILITY; BUILDING ELEVATIONS
327	72-A-301	RESIDUALS AREA - DEWATERING FACILITY; WALL SECTIONS
328	80-A-001	ELECTRICAL BUILDING; PERSPECTIVES
329	80-A-002	ELECTRICAL BUILDING; ENERGY CODE COMPLIANCE
330	80-A-101	ELECTRICAL BUILDING; LIFE SAFETY PLAN
331	80-A-102	ELECTRICAL BUILDING; OPERATING FLOOR PLAN
332	80-A-103	ELECTRICAL BUILDING; ROOF PLAN
333	80-A-201	ELECTRICAL BUILDING; BUILDING ELEVATIONS
334	80-A-301	ELECTRICAL BUILDING; BUILDING SECTIONS
335	80-A-302	ELECTRICAL BUILDING; WALL SECTIONS
336	90-A-001	CHEMICALS - CHEMICAL FACILITY; PERSPECTIVES
337	90-A-101	CHEMICALS - CHEMICAL FACILITY; OPERATING FLOOR PLAN
338	90-A-102	CHEMICALS - CHEMICAL FACILITY; ROOF PLAN
339	90-A-201	CHEMICALS - CHEMICAL FACILITY; BUILDING ELEVATIONS
340	90-A-301	CHEMICALS - CHEMICAL FACILITY; WALL SECTIONS
341	95-A-001	OPERATIONS BUILDING; PERSPECTIVES
342	95-A-002	OPERATIONS BUILDING; ENERGY CODE COMPLIANCE 1
343	95-A-003	OPERATIONS BUILDING; ENERGY CODE COMPLIANCE 2
344	95-A-101	OPERATIONS BUILDING; LIFE SAFETY PLAN
345	95-A-102	OPERATIONS BUILDING; OPERATING FLOOR PLAN
346	95-A-103	OPERATIONS BUILDING; ROOF PLAN
347	95-A-104	OPERATIONS BUILDING; REFLECTED CEILING PLAN
348	95-A-201	OPERATIONS BUILDING; BUILDING ELEVATIONS 1
349	95-A-202	OPERATIONS BUILDING; BUILDING ELEVATIONS 2
350	95-A-301	OPERATIONS BUILDING; WALL SECTIONS 1
351	95-A-302	OPERATIONS BUILDING; WALL SECTIONS 2
352	95-A-303	OPERATIONS BUILDING; WALL TYPES AND CONNECTION DETAILS
353	95-A-401	OPERATIONS BUILDING; ENLARGED OPERATING FLOOR PLAN - EAST
354	95-A-402	OPERATIONS BUILDING; ENLARGED OPERATING FLOOR PLAN - WEST
355	95-A-403	OPERATIONS BUILDING; ENLARGED RESTROOM PLANS
356	95-A-404	OPERATIONS BUILDING; RESTROOM AND LOCKER ROOM ELEVATIONS 1
357	95-A-405	OPERATIONS BUILDING; RESTROOM AND LOCKER ROOM ELEVATIONS 2
358	95-A-406	OPERATIONS BUILDING; ENLARGED CASEWORK PLANS AND ELEVATIONS 1
359	95-A-407	OPERATIONS BUILDING; ENLARGED CASEWORK PLANS AND ELEVATIONS 2
360	95-A-408	OPERATIONS BUILDING; ENLARGED CASEWORK PLANS AND ELEVATIONS 3
361	96-A-001	MAINTENANCE BUILDING; PERSPECTIVES
362	96-A-002	MAINTENANCE BUILDING; ENERGY CODE COMPLIANCE 1
363	96-A-003	MAINTENANCE BUILDING; ENERGY CODE COMPLIANCE 2
364	96-A-101	MAINTENANCE BUILDING; LIFE SAFETY PLAN
365	96-A-102	MAINTENANCE BUILDING; OPERATING FLOOR PLAN
366	96-A-103	MAINTENANCE BUILDING; CLERESTORY PLANS
367	96-A-104	MAINTENANCE BUILDING; ROOF PLANS
369	96-A-201	MAINTENANCE BUILDING; ELEVATIONS 1
370	96-A-202	MAINTENANCE BUILDING; ELEVATIONS 2
371	96-A-301	MAINTENANCE BUILDING; WALL SECTIONS 1
372	96-A-302	MAINTENANCE BUILDING; WALL SECTIONS 2
373	96-A-303	MAINTENANCE BUILDING; WALL TYPES AND CONNECTION DETAILS
374	96-A-401	MAINTENANCE BUILDING; INTERMEDIATE FLOOR PLAN
375	96-A-402	MAINTENANCE BUILDING; ENLARGED INTERMEDIATE FLOOR PLAN
376	96-A-601	MAINTENANCE BUILDING; SCHEDULES

PLUMBING

SHEET NO.	DRAWING NO.	DESCRIPTION
377	00-P-001	PLUMBING LEGEND, ABBREVIATIONS, AND GENERAL NOTES
378	00-P-501	PLUMBING DETAILS 1
379	00-P-502	PLUMBING DETAILS 2
380	00-P-601	PLUMBING SCHEDULES
381	00-P-701	PLUMBING SCHEMATICS 1
382	00-P-702	PLUMBING SCHEMATICS 2
383	13-P-101	WASH RACK; PLANS, SECTIONS & DETAILS
384	16-P-101	WATER VEHICLES EQUIPMENT STORAGE; PLANS, SECTIONS & DETAILS
385	17-P-101	PERMANENT OPEN STORAGE; PLANS, SECTIONS & DETAILS
386	18-P-101	PLANT DRAIN/SEWER PUMP STATION; PLANS, SECTIONS & DETAILS
387	50-P-101	RO/UV BUILDING; PLANS
388	50-P-301	RO/UV BUILDING; SECTIONS & DETAILS
389	72-P-101	RESIDUALS AREA - DEWATERING FACILITY; PLANS
390	72-P-301	RESIDUALS AREA - DEWATERING FACILITY; SECTIONS & DETAILS
391	90-P-101	CHEMICAL FACILITY; PLANS
392	90-P-301	CHEMICAL FACILITY; SECTIONS & DETAILS
393	95-P-101	OPERATIONS BUILDING; PLANS
394	95-P-301	OPERATIONS BUILDING; SECTIONS & DETAILS
395	96-P-101	MAINTENANCE BUILDING; PLANS
396	96-P-301	MAINTENANCE BUILDING; SECTIONS & DETAILS

HVAC

SHEET NO.	DRAWING NO.	DESCRIPTION
397	00-H-001	HVAC LEGEND, ABBREVIATIONS, AND GENERAL NOTES
398	00-H-002	HVAC SCHEMATICS 1
399	00-H-003	HVAC SCHEMATICS 2
400	00-H-004	HVAC SCHEDULES
401	00-H-501	HVAC DETAILS 1
402	00-H-502	HVAC DETAILS 2
404	16-H-101	WATER AND COLLECTION SUPPLIES STORAGE SHED; PLANS
405	16-H-301	WATER AND COLLECTION SUPPLIES STORAGE SHED; SECTIONS & DETAILS
406	50-H-101	RO/UV BUILDING; PLANS
407	50-H-301	RO/UV BUILDING; SECTIONS & DETAILS
408	80-H-101	ELECTRICAL BUILDING; PLANS
409	80-H-301	ELECTRICAL BUILDING; SECTIONS & DETAILS
410	95-H-101	OPERATIONS BUILDING; PLANS
411	95-H-301	OPERATIONS BUILDING; SECTIONS & DETAILS
412	96-H-101	MAINTENANCE BUILDING; PLANS
413	96-H-301	MAINTENANCE BUILDING; SECTIONS & DETAILS

FIRE PROTECTION

SHEET NO.	DRAWING NO.	DESCRIPTION
414	50-F-101	RO/UV BUILDING - FIRE DETECTION; PLAN & DETAILS
415	95-F-001	OPERATIONS BUILDING - FIRE SUPPRESSION SYSTEM; SCHEMATIC
416	95-F-101	OPERATIONS BUILDING - FIRE SUPPRESSION SYSTEM; PLAN
417	95-F-102	OPERATIONS BUILDING - FIRE DETECTION; PLAN & DETAILS
418	96-F-001	MAINTENANCE BUILDING - FIRE SUPPRESSION SYSTEM; SCHEMATIC
419	96-F-101	MAINTENANCE BUILDING - FIRE SUPPRESSION SYSTEM; PLAN
420	96-F-102	MAINTENANCE BUILDING - FIRE DETECTION; PLAN & DETAILS

ELECTRICAL

SHEET NO.	DRAWING NO.	DESCRIPTION
421	00-E-001	GENERAL; LEGENDS
422	00-E-002	GENERAL; ABBREVIATIONS AND GENERAL NOTES
423	00-E-501	GENERAL; INSTALLATION DETAILS SHEET 1 OF 3
424	00-E-502	GENERAL; INSTALLATION DETAILS SHEET 2 OF 3
425	00-E-503	GENERAL; INSTALLATION DETAILS SHEET 3 OF 3
426	00-E-504	GENERAL; GROUNDING DETAILS
427	10-E-100	ELECTRICAL SITE - OVERALL POWER PLAN
428	10-E-111	ELECTRICAL SITE - OVERALL LIGHTING PLAN
429	10-E-601	OVERALL SITE DUCTBANK SCHEDULE SHEET 1 OF 2
430	10-E-602	OVERALL SITE DUCTBANK SCHEDULE SHEET 2 OF 2
431	21-E-101	HEADWORKS AREA POWER AND GROUNDING PLAN
432	21-E-711	HEADWORKS AREA PLC/RIO ONE-LINE DIAGRAM
433	31-E-101	TREATMENT AREA - BNR BASINS POWER AND GROUNDING PLAN
434	31-E-711	TREATMENT AREA PLC/RIO ONE-LINE SHEET 1 OF 2
435	31-E-712	TREATMENT AREA PLC/RIO ONE-LINE SHEET 2 OF 2
436	31-E-713	32-MBR-PLC-0001 ONE-LINE DIAGRAM
437	32-E-101	TREATMENT AREA - MBR SYSTEM POWER AND GROUNDING PLAN
438	33-E-101	TREATMENT AREA - RO FEED TANKS POWER AND GROUNDING PLAN
439	34-E-101	TREATMENT AREA - RECYCLED WATER PUMPS POWER AND GROUNDING PLAN
440	50-E-601	RO/UV BUILDING POWER PANELS SCHEDULE
441	50-E-701	50-ELEC-MCC-0001 ONE-LINE SHEET 1 OF 2
442	50-E-702	50-ELEC-MCC-0001 ONE-LINE SHEET 2 OF 2
443	50-E-711	RO/UV BUILDING PLC/RIO ONE-LINE SHEET 1 OF 4
444	50-E-712	RO/UV BUILDING PLC/RIO ONE-LINE SHEET 2 OF 4
445	50-E-721	RO/UV BUILDING SCHEMATICS SHEET 1 OF 2
446	50-E-722	RO/UV BUILDING SCHEMATICS SHEET 2 OF 2
447	51-E-101	RO/UV BUILDING - RO SYSTEM POWER AND GROUNDING PLAN
448	51-E-102	RO/UV BUILDING - RO CIP & FLUSH SYSTEMS POWER AND GROUNDING PLAN
449	51-E-103	RO/UV BUILDING - ELECTRICAL ROOM POWER AND GROUNDING PLAN
450	52-E-101	RO/UV BUILDING - UV SYSTEM POWER AND GROUNDING PLAN
451	61-E-101	PRODUCT WATER AREA - CALCITE CONTACTOR AREA POWER AND GROUNDING PLAN
452	62-E-101	PRODUCT WATER AREA - IPR PRODUCT WATER STORAGE TANK POWER AND GROUNDING PLAN
453	63-E-101	PRODUCT WATER AREA -PRODUCT WATER STORAGE TANK POWER AND GROUNDING PLAN
454	64-E-101	PRODUCT WATER AREA - OUTFALL PUMPS STATION POWER AND GROUNDING PLAN
455	71-E-101	RESIDUALS AREA - SLUDGE HOLDING TANKS & SAFE SETTLE TANK AREA POWER AND GROUNDING PLAN
456	72-E-101	RESIDUALS AREA - DEWATERING FACILITY POWER AND GROUNDING PLAN
457	72-E-701	RESIDUALS AREA - PLC/RIO ONE-LINE
458	73-E-101	RESIDUALS AREA - SAFE FILTER POWER AND GROUNDING PLAN
459	80-E-101	ELECTRICAL BUILDING POWER AND GROUNDING PLAN
460	80-E-601	ELECTRICAL BUILDING POWER PANELS SCHEDULE
461	80-E-701	80-ELEC-SWB-0001 ONE-LINE DIAGRAM
462	80-E-702	80-ELEC-MCC-0001 ONE-LINE DIAGRAM
463	80-E-703	80-ELEC-MCC-0002 ONE-LINE DIAGRAM SHEET 1 OF 2
464	80-E-704	80-ELEC-MCC-0002 ONE-LINE DIAGRAM SHEET 2 OF 2
465	80-E-711	ELECTRICAL BUILDING PLC/RIO ONE-LINE DIAGRAM
466	80-E-721	ELECTRICAL BUILDING SCHEMATICS SHEET 1 OF 3
467	80-E-722	ELECTRICAL BUILDING SCHEMATICS SHEET 2 OF 3
468	80-E-723	ELECTRICAL BUILDING SCHEMATICS SHEET 3 OF 3
469	90-E-101	CHEMICAL FACILITY POWER AND GROUNDING PLAN
470	90-E-711	CHEMICAL FACILITY PLC/RIO ONE-LINE
472	95-E-111	OPERATIONS & CONTROL BUILDING LIGHTING PLAN
473	95-E-601	OPERATIONS BUILDING POWER PANELS SCHEDULE
474	96-E-101	MAINTENANCE BUILDING POWER AND GROUNDING PLAN
475	96-E-111	MAINTENANCE BUILDING LIGHTING PLAN
476	96-E-601	MAINTENANCE BUILDING POWER AND LIGHTING PANELS SCHEDULE

60% SUBMITTAL - NOT FOR CONSTRUCTION

NO.	BY	CHK	APP
B	KEZ	RT	EVB
A	KEZ	RWF	EVB

REVISIONS AND RECORD OF USE

DATE	
7/30/2019	60% SUBMITTAL
3/5/2019	30% SUBMITTAL

BLACK & VEATCH

JOINT VENTURE

FILANC

BLACK & VEATCH

CITY OF MORRO BAY
MORRO BAY WATER
RECLAMATION FACILITY (WRF)

GENERAL
SHEET LIST 2

DESIGNED: EVB, KEZ
DETAILED: MAK
CHECKED:
APPROVED:
DATE:

0 1/2 1

IF THIS BAR DOES NOT MEASURE 1" THEN DRAWING IS NOT TO FULL SCALE

PROJECT NO.
400530

00-G-003
SHEET
OF

D400530
FD81203_PW

A	ACID, AMBER INDICATING LIGHT,AMP
AA	AIR-AERATION
AC	ALTERNATING CURRENT
AER	AERATION SYSTEM
AIR	PROCESS AIR
ALT	ALTERNATE, (IVE)
ALUM	ALUMINUM
AM	AMMETER
AMP	AMPERE
ANTI	ANTISCALANT
AS	AMMETER SWITCH
ATS	AUTOMATIC TRANSFER SWITCH
AUTO	AUTOMATIC
AWG	AMERICAN WIRE GAUGE
AWS	AERATED WAS
BLDG	BUILDING
BNR	BNR
C/L	CENTERLINE
CA	CITRIC ACID
CAKE	DEWATERED CAKE SLUDGE
CAL	CALCITE
CHANNEL	PROCESS CHANNEL
CIP	CAST IN PLACE
CIP	CAST IRON PIPE
CIPR	REVERSE OSMOSIS CIP RETURN
CIPS	REVERSE OSMOSIS CIP SUPPLY
CLR	CLEAR, (ANCE)
CMU	CONCRETE MASONRY UNIT
COMB	COMBINATION
CONC	CONCRETE
CONST	CONSTRUCTION
CONT	CONTINUOUS, CONTINUATION, CONTROL
CP	CONTROL PANEL
CS	CONTROL SWITCH, CONTROL STATION, CUP SINK
CSK	COUNTERSUNK, (INK)
CT	CERAMIC TILE, CYCLE TIMER
CT	CURRENT TRANSFORMER
CU	CUBIC
CU YD	CUBIC YARD
CW	COLD, WATER
D	DRAIN
DC	DIRECT CURRENT
DEPT	DEPARTMENT
DIA	DIAMETER
DIFF	DIFFUSER
DIM	DIMENSION
DIP	DUCTILE IRON PIPE
DIV	DIVISION
DMJ	DOUBLE MECHANICAL JOINT
DO	DISSOLVED OXYGEN
DR	DRAIN
DRN	DRAIN
DS	DOWNSPOUT
DV	DRAIN VALVE
DWG(S)	DRAWING(S)
DWL(S)	DOWEL(S)
DWT	DEWATERING
E	EAST, ELECTRICAL
EA	EACH
ECC	ECCENTRIC
EF	EACH FACE
EFF	EFFLUENT
EL	ELEVATION
ELEC	ELECTRIC, (AL)
ELEV	ELEVATION
EMER	EMERGENCY
EQ	EQUAL
EQUIP	EQUIPMENT
EW	EACH WAY
EXIST	EXISTING
EXP	EXPANSION, EXPOSED
EXP JT	EXPANSION JOINT
EXT	EXTENSION, EXTERIOR, EXTERNAL
F	FIRE PROTECTION WATER SYSTEM
FA	FOUL AIR
FBW	FILTER BACKWASH
FC	FLEXIBLE CONNECTION, FLOW CONTROL
FD	FLOOR DRAIN
FDN	FOUNDATION
FE	FIRE EXTINGUISHER
FEC	FIRE EXTINGUISHER CABINET
FF	REVERSE OSMOSIS FORWARD FLUSH
FH	FLAT HEAD, FIRE HYDRANT
FIG	FIGURE
FIW	FILTER INLET WASH
FL	FLOOR, FLOW LINE
FLEX	FLEXIBLE
FM	FORCE MAIN
FO	FUEL OIL
FOW	FILTERED OUTLET WATER
FPW	FIRE PROTECTION WATER
FRP	FIBERGLASS REINFORCED PLASTIC
FS	FAR SIDE, FLOOR SLEEVE, FLOAT SWITCH
FSCM	FILTER SCUM
FSW	FILTER SOLIDS WASTE
FT	FOOT
FTG	FOOTING
FUE	DIESEL FUEL
FURN	FURNISH, FURNISHED
FWD	FORWARD
G	GAS
GA	GAUGE
GAL	GALLON
GEN	GENERATOR FUEL
GEN	GENERAL, GENERATOR
GPM	GALLONS PER MINUTE
GRT	GRIT
GWB	GYPSUM WALLBOARD
GYP	GYPSUM
H	HIGH, HOUR, HYDROGEN
HDR	HEADER
HE	HEAT EXCHANGER
HEX	HEXAGONAL
HGT	HEIGHT
HH	HANDHOLE
HORIZ	HORIZONTAL
HP	HIGH POINT, HORSEPOWER
HR	HOUR, HANDRAIL
HS	HIGH STRENGTH
HSO4	SULFURIC ACID
HV	HOSE VALVE
HVAC	HEATING,VENTILATING AND AIR CONDITIONING
HW	HOT WATER
I	INDICATOR
IA	INSTRUMENT AIR
IF	INSIDE FACE
IN	INCHES
INC	INCORPORATED
INV	INVERT
IPR	INDIRECT POTABLE REUSE WATER
JB	JUNCTION BOX
IPS	IRON PIPE SIZE
JT	JOINT
K	KIPS
KV	KILOVOLT
KVA	KILOVOLT AMPERE
KW	KILOWATT
KWH	KILOWATT HOUR
L	LOUVER
LAB	LABORATORY
LAT	LEAVING AIR TEMPERATURE
LAT	LATERAL
LB(S)	POUNDS
LG	LENGTH, LONG
LO	LOUVER OPENING
LS	LEVEL SWITCH
LT	LEFT, LAB TABLE
MA	MILLIAMPERE
MAX	MAXIMUM
MCC	MOTOR CONTROL CENTER
MECH	MECHANICAL
MEM	MEMBRANE
MFF	MICROFILTRATION FILTRATE
MFR(S)	MANUFACTURER(S)
MG	MILLION GALLONS
MGD	MILLION GALLONS PER DAY
MH	MANHOLE
MIN	MINIMUM, MINUTE
MISC	MISCELLANEOUS
MJ	MECHANICAL JOINT
ML	MIXED LIQUOR
MP	METERING PUMP
MS	MACHINE SCREW
MSL	MEAN SEA LEVEL
MTD	MOUNTED
MTL	MATERIAL
N	NORTH
N/A	NOT APPLICABLE
N.O.	NORMALLY OPEN
NACL	SODIUM HYPOCHLORITE
NAOH	SODIUM HYDROXIDE
NC	NORMALLY CLOSED
NEUT	NEUTRAL
NF	NEAR FACE
NHS	SODIUM BISULFATE
NO.(S)	NUMBER(S)
NOCL	SODIUM HYPOCHLORITE
NPW	NONPOTABLE WATER
NS	NEAR SIDE
NTS	NOT TO SCALE
OC	ON CENTER, ODOR CONTROL
OD	OUTSIDE DIAMETER
OF	OUTSIDE FACE, OVERFLOW
OH	OVERHEAD
OL	OVERLOAD
OPER	OPERATING
OZ	OUNCE
PC	POINT OF CURVE
PCC	POINT OF COMPOUND CURVATURE
PCR	REVERSE OSMOSIS PERMRATE
PD	PLAN DIMENSION, SUMP PUMP DISCHARGE
PE	PLAIN END
PG	PRESSURE GAUGE
PI	POINT OF INTERSECTION
PL	PLATE
PLYWD	PLYWOOD
POLY	POLYMER
POLY	POLYMER
POW	PLANT OUTFALL WATER
PP	POWER POLE
PR	PAIR
PROJ	PROJECTION
PRS	PRESSURE REDUCING STATION
PRV	POWER ROOF VENTILATOR
PRW	PLANT RECYCLED WATER
PS	PIPE SUPPORT
PSF	POUNDS PER SQUARE FOOT
PSI	POUNDS PER SQUARE INCH
PSW	PLANT SERVICE WATER
PT	POINT, POINT OF TANGENCY
PVC	POLYVINYL CHLORIDE, POINT ON VERTICAL CURVE
PVCP	POLYVINYL CHLORIDE PIPE
PVMT	PAVEMENT
PW	POTABLE WATER
R	RADIUS, RISER
R / W	RIGHT OF WAY
RAS	RETURN ACTIVATED SLUDGE
RCW	RECLAIMED WATER
RECIRC	RECIRCULATING
RED	REDUCER, REDUCING
REINF	REINFORCING
REQD	REQUIRED
REV	REVERSED
RM	ROOM
RO	REVERSE OSMOSIS, ROUGH OPENING
ROC	REVERSE OSMOSIS CONCENTRATE
ROF	REVERSE OSMOSIS FEED
ROP	REVERSE OSMOSIS PERMEATE
RPM	REVOLUTIONS PER MINUTE
RS	RAW SLUDGE, RAW SEWAGE, ROLLED STEEL
RT	RIGHT
S	SOUTH, SPEAKER
SA	SULFURIC ACID
SAN	SANITARY SEWER
SCM	SCUM
SCR	SCREENINGS
SEC	SECOND
SECT	SECTION
SH	SHEET
SIM	SIMILAR
SP	SUMP PUMP
SPEC(S)	SPECIFICATION(S)
SQ	SQUARE
SS	SANITARY SEWER, STAINLESS STEEL
ST	STORM DRAIN
STD	STANDARD
STL	STEEL
STR	STRUCTURAL
SV	SHUTOFF VALVE
SYS	SYSTEM
T	THERMOSTAT, TREAD, TOTALIZER
T	TRANSFORMER, TOP
T&B	TOP AND BOTTOM
TEMP	TEMPERATURE, TEMPORARY
THK	THICK (NESS)
TI	TOTALIZING INDICATOR, TEMPERATURE INDICATOR
TP	TWISTED PAIR COUPLE, TOWEL PIN
TS	TEMPERATURE SWITCH
TW	TREATED WATER, TEMPERED OR BLENDED WATER
TYP	TYPICAL
UH	UNIT HEATER
UNO	UNLESS NOTED OTHERWISE
UV	ULTRAVIOLET
UVE	ULTRAVIOLET TREATMENT EFFLUENT
V	VALVE, VOLT, VENT
VAC	VACUUM
VBF	VALVE, AWWA BUTTERFLY
VBI	VALVE, INDUSTRIAL BUTTERFLY
VBL	VALVE, BALL
VBM	VALVE, BALL MISCELLANEOUS
VC	VERTICAL CURVE, VICTAULIC COUPLING
VERT	VERTICAL
W	WEST, WIDE, WINDOW, WATT, WATER
W/	WITH
W/O	WITHOUT
WAS	WASTE ACTIVATED SLUDGE
WB	WALLBOARD
WC	WATER CLOSET
WD	WOOD, WIDTH
WH	WALL HYDRANT
WL	WATER LEVEL
WM	WATER METER, WATTMETER
WS	WATERSTOP
WT	WEIGHT
WW	WETWELL
WWF	WELDED WIRE FABRIC
WWR	WASTEWATER-RAW
WWS	WASTEWATER-SCREENED
x	BY,TIMES
YH	YARD HYDRANT
#	NUMBER
%	PERCENT
&	AND
@	AT
<	DEFLECTION ANGLE

NO.	BY	CHK	APP
B	KEZ	RT	EVB
A	KEZ	RWF	EVB

DATE	REVISIONS AND RECORD OF USE
7/30/2019	60% SUBMITTAL
3/5/2019	30% SUBMITTAL

BLACK & VEATCH

JOINT VENTURE

BLACK & VEATCH

FILANC

CITY OF MORRO BAY
MORRO BAY WATER
RECLAMATION FACILITY (WRF)

GENERAL
ABBREVIATIONS

DESIGNED: EVB, KEZ
DETAILED: MAK
CHECKED:
APPROVED:
DATE:

0 1/2 1

IF THIS BAR DOES NOT MEASURE 1" THEN DRAWING IS NOT TO FULL SCALE

PROJECT NO.
400530

00-G-004
SHEET
OF

60% SUBMITTAL - NOT FOR CONSTRUCTION

D400530
FD81203_PW

GENERAL LEGEND

- SURFACED STREET, ROAD OR DRIVE
- SURFACED STREET, ROAD OR DRIVE WITH CURBS
- NON-SURFACED STREET, ROAD OR DRIVE
- CONCRETE WALK
- CB — CATCH BASIN
- MANHOLE
- DRAINAGE COURSE OR FLOW LINE
- 326 — EXISTING GROUND CONTOUR
- 326 — FINISH GRADE CONTOUR
- BANK OR SLOPE LINES
- #3 OR T.H.#3 B3 — TEST HOLE AND NUMBER
- SURVEY LINE WITH PI, PT, OR POT
- CONCRETE ENCASEMENT-PLAN
- CONCRETE REACTION BLOCKING AT BEND, PLUG OR TEE
- DRAINS OR CULVERTS
- TUNNEL CASING - PLAN
- SMALLER THAN 24" / 24" AND LARGER — EXISTING GENERAL LAYOUT YARD PIPING
- SMALLER THAN 24" / 24" AND LARGER — NEW
- NEW WATER LINE OR SEWER IN PROFILE
- NON-CONNECTING PIPING
- CE/L — CONSTRUCTION EASEMENT LINE
- E/L — EASEMENT LINE
- R/W — RIGHT-OF-WAY LINE
- P — PROPERTY LINE
- PE/L — PERMANENT EASEMENT LINE
- TE/L — TEMPORARY EASEMENT LINE
- UE/L — UTILITY EASEMENT LINE
- S/L — SURVEY LINE / SECTION LINE
- W — WATER LINE
- G — GAS LINE
- T — TELEPHONE (UNDERGROUND)
- E — ELECTRICAL (UNDERGROUND)
- P T — POWER OR TELEPHONE LINES (OVERHEAD)
- (G) (W) — WATER OR GAS VALVE
- (WM) (GM) — WATER OR GAS METER
- TELEPHONE OR POWER POLE WITH GUY ANCHOR
- FIRE HYDRANT
- Y — YARD HYDRANT
- STREET LIGHT POLE
- TRAFFIC SIGNAL
- TRAFFIC SIGN
- S — STOPSIGN
- HEDGE, BRUSH, SHRUBS, WOODS
- 10" — DECIDUOUS TREE AND TRUNK DIAMETER
- 4" — CONIFEROUS TREE AND TRUNK DIAMETER
- SWAMP

- BUILDINGS, STRUCTURES
- STRUCTURES UNDERGROUND
- FUTURE BUILDINGS, STRUCTURES
- CLOTHES LINE
- SWING SET
- FENCE
- FENCE, WOOD
- RAILROAD, EACH TRACK
- CENTERLINE
- 1 / AC45 — SECTION NUMBER OR DETAIL LETTER; DRAWING NUMBER ON WHICH SECTION OR DETAIL APPEARS; OR WHERE SECTION IS CUT OR DETAIL IS NOTED
- DOOR, WINDOW AND LOUVER SCHEDULE REFERENCE
- 1 / A045 — WALL ELEVATION
- D — ABBREVIATION
- 4 — SCHEDULE NUMBER
- F102 — ROOM NUMBER; AREA DESIGNATION
- PV 10 — EQUIPMENT OR VALVE IDENTIFICATION CODE; EQUIPMENT NUMBER
- PV-10 — EQUIPMENT OR VALVE IDENTIFICATION CODE; EQUIPMENT NUMBER
- EQUIP CALLOUT — EQUIPMENT REPRESENTATION WITH CALLOUT
- EXISTING FACILITY TO BE DEMOLISHED OR REMOVED

PIPING SYSTEMS

- NEW PIPING
- UNDERGROUND PIPING
- EXISTING PIPING
- FUTURE PIPING

PIPING ACCESSORIES LEGEND

- BLIND FLANGE
- CAP OR PLUG
- CO — CLEANOUT
- CROSS
- DIAPHRAGM SEAL
- ELBOW
- ELBOW DOWN
- ELBOW TURNING UP
- SIZE — HOSE CONNECTION
- Q — QUICK COUPLING
- REDUCER
- RUPTURE DISK
- TEE
- TEE LINE DOWN
- TEE LINE UP
- WYE
- S — WYE STRAINER
- S — WYE STRAINER WITH BLOWOFF
- DRAIN OR BELL-UP
- CALIBRATING COLUMN
- TRAP
- UNION
- WALL SLEEVE
- AT — AUTOMATIC DRAIN TRAP
- DT — DRIP TRAP
- S / S — DUPLEX STRAINER
- EXPANSION COMPENSATOR
- F — INLINE FILTER
- FLEXIBLE HOSE OR TUBING
- FLEXIBLE CONNECTOR
- HOSE REEL
- INJECTOR, EDUCTOR, BLENDER
- ORIFICE PLATE
- PIPE GUIDE
- S — SEDIMENT TRAP
- S — STRAINER
- SUCTION DIFFUSER
- PIPE DIFFUSER
- SURGE CHAMBER
- VENT - SCREENED
- VENT
- P — PRESSURE GAUGE W/SNUBBER
- T — TEMPERATURE INDICATOR
- THERMOMETER
- ELECTROMAGNETIC/ULTRASONIC FLOWMETER
- ROTAMETER
- TURBINE OR PROPELLOR FLOWMETER
- M — SET STOP METER
- VENTURI
- FM — FLOW METER

MISCELLANEOUS EQUIPMENT

- STATIC MIXER
- VERTICAL MIXER
- SIGHT GLASS
- CENTRIFUGE
- CHANNEL DIFFUSER
- COMPRESSOR OR BLOWER
- PIPE ANCHOR
- PUMP
- SLUICE GATE
- SLIDE GATE
- STOP PLATE
- BAR SCREEN
- EXPANSION TANK
- SCREW (LIFT) PUMP
- FLUME
- WEIR

MATERIALS LEGEND

- EARTH OR GRADE
- GRANULAR FILL (CRUSHED ROCK OR GRAVEL)
- ROCK
- NEW CONCRETE
- EXISTING CONCRETE, PRECAST OR PRESTRESSED CONCRETE
- BRICK, FACE
- BRICK, COMMON
- CONCRETE MASONRY UNITS (CMU)
- CUT STONE OR SAND FILL, GROUT, MORTAR, AND PLASTER
- WOOD, SHEATHING, PANELING, DECKING, ETC.
- WOOD, STUDS, BEAMS, JOISTS, ETC.
- RIPRAP
- CHECKERED PLATE
- STEEL (FOR 1"SCALE & LARGER)
- STEEL OR ALUMINUM (FOR 3/4" SCALE & SMALLER)
- BAR GRATING (LINES IN DIRECTION OF SPAN)
- ALUMINUM
- INSULATION (BATT)
- INSULATION (RIGID)

VALVE LEGEND

- PINCH VALVE
- PLUG VALVE, ECCENTRIC
- PLUG VALVE, NON-ECCENTRIC
- BUTTERFLY VALVE
- GATE VALVE
- BALL VALVE
- GLOBE VALVE
- CHECK VALVE
- 3 WAY VALVE
- 4 WAY VALVE
- ANGLE VALVE
- CHLORINE INSTITUTE VALVE
- DIAPHRAGM VALVE
- THROTTLING VALVE
- FLAME ARRESTER OR CHECK
- BACKWATER VALVE
- INLINE PRESSURE RELIEF VALVE
- PRESSURE REGULATING VALVE
- PRESSURE SUSTAINING OR MAINTAINING VALVE
- VACUUM BREAKER
- THERMAL SHUTOFF VALVE
- EXPLOSION RELIEF VALVE
- HOSE FAUCET
- HOSE FAUCET W/VACUUM BREAKER
- HOSE VALVE W/HOSE NIPPLE
- BACKFLOW PREVENTER
- SAFETY RELIEF VALVE
- V — VACUUM RELIEF CHECK VALVE
- PRESSURE VACUUM RELIEF VALVE

ACTUATOR LEGEND

- E — ELECTRIC
- FLOAT
- DIAPHRAGM
- P/O — AIR/OIL TANDEM
- S — SOLENOID
- A — AIR

NOTE :
SYMBOLS ON THIS SHEET WHICH ARE TO BE SHOWN AS EXISTING SHALL BE DELINEATED AS SCREENED
THOSE SYMBOLS WHICH ARE TO BE SHOWN AS NEW SHALL BE DELINEATED AS SOLID (HEAVY)

60% SUBMITTAL - NOT FOR CONSTRUCTION

NO.	BY	CHK	APP	DATE	REVISIONS AND RECORD OF USE
B	KEZ	RT	EVB	7/30/2019	60% SUBMITTAL
A	KEZ	RWF	EVB	3/5/2019	30% SUBMITTAL

BLACK & VEATCH JOINT VENTURE — BLACK & VEATCH — FILANC

CITY OF MORRO BAY
MORRO BAY WATER RECLAMATION FACILITY (WRF)

GENERAL LEGEND

DESIGNED: EVB, KEZ
DETAILED: MAK
CHECKED:
APPROVED:
DATE:

0 1/2 1
IF THIS BAR DOES NOT MEASURE 1" THEN DRAWING IS NOT TO FULL SCALE

PROJECT NO. 400530

00-G-005
SHEET
OF

D400530
FD81203_PW

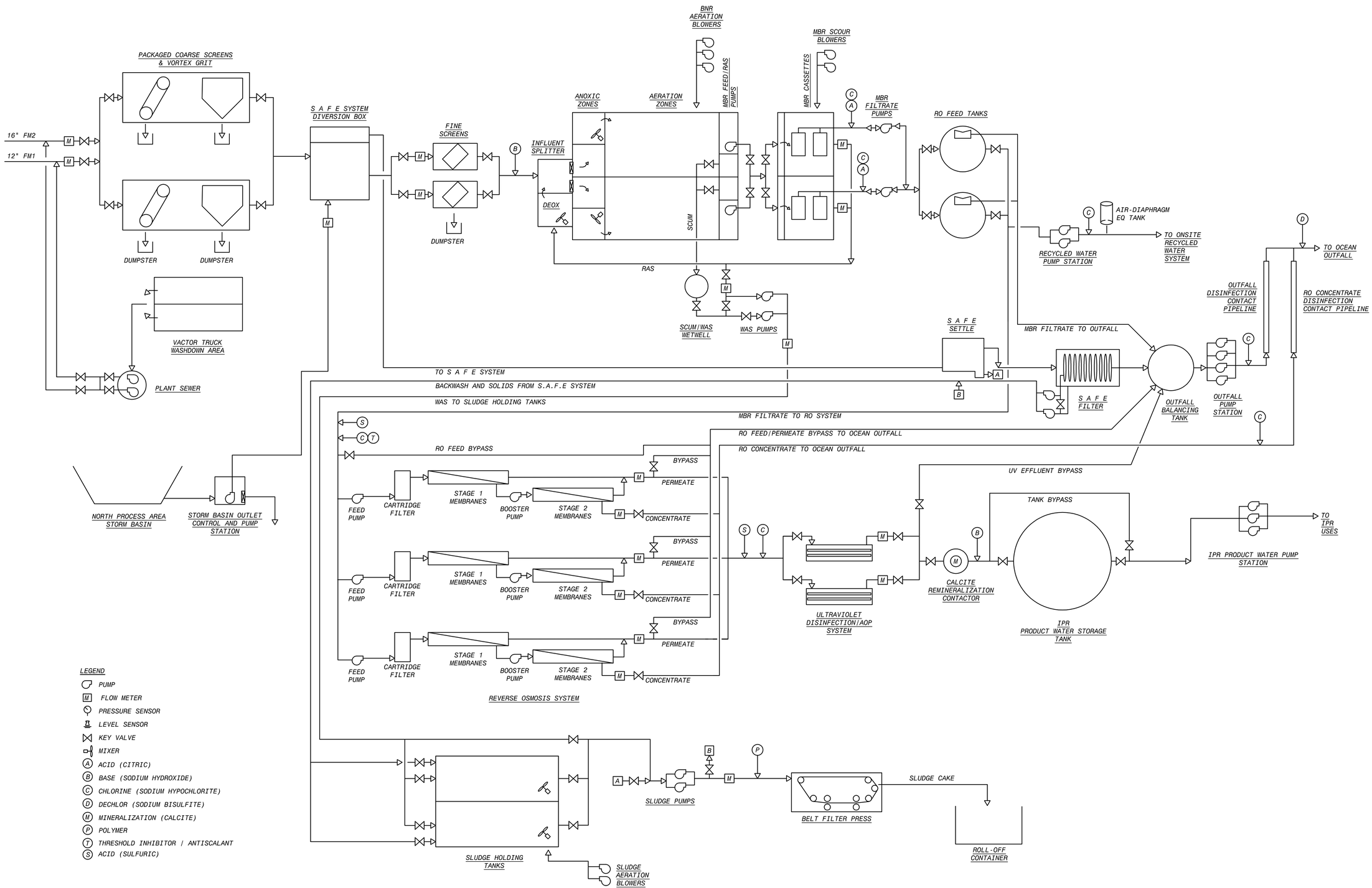

NO.	BY	CHK	APP	DATE	REVISIONS AND RECORD OF USE
B	KEZ	RT	EVB	7/30/2019	60% SUBMITTAL
A	KEZ	RWF	EVB	3/5/2019	30% SUBMITTAL

BLACK & VEATCH

JOINT VENTURE

BLACK & VEATCH

FILANC

CITY OF MORRO BAY
MORRO BAY WATER RECLAMATION FACILITY (WRF)

GENERAL
PROCESS SCHEMATIC

DESIGNED: EVB, KEZ
DETAILED: MAK
CHECKED:
APPROVED:
DATE:

0 1/2 1
IF THIS BAR DOES NOT MEASURE 1" THEN DRAWING IS NOT TO FULL SCALE

PROJECT NO.
400530

00-G-006
SHEET
OF

60% SUBMITTAL - NOT FOR CONSTRUCTION

D400530
FD81203_PW

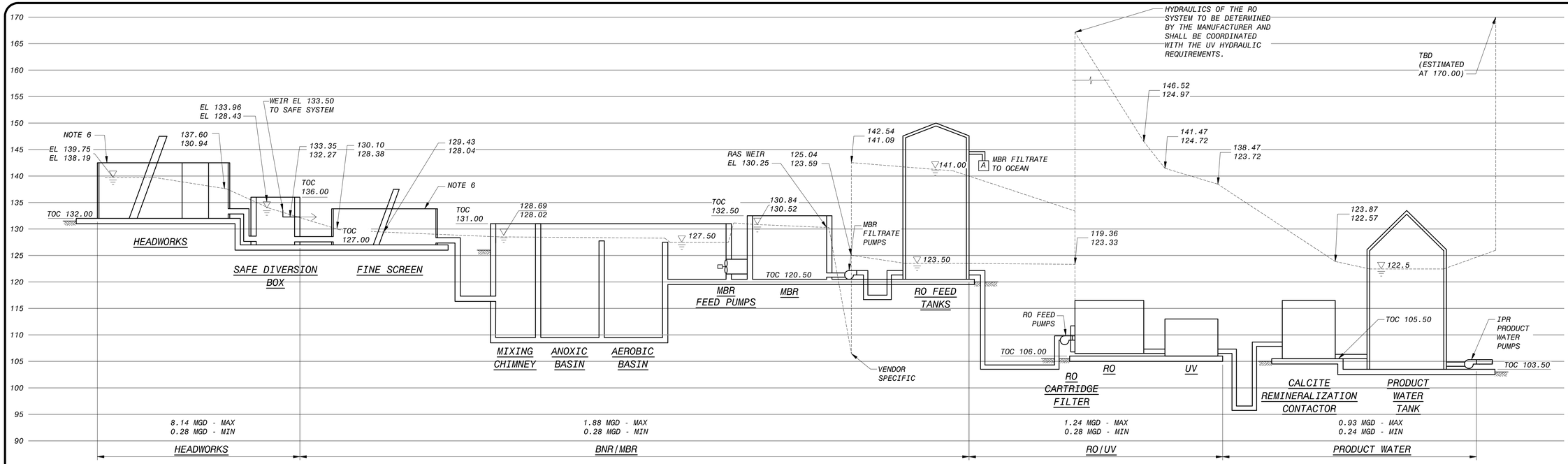

HYDRAULIC PROFILE - PRIMARY TREATMENT TRAIN

VERT SCALE: 1" = 10'-0"

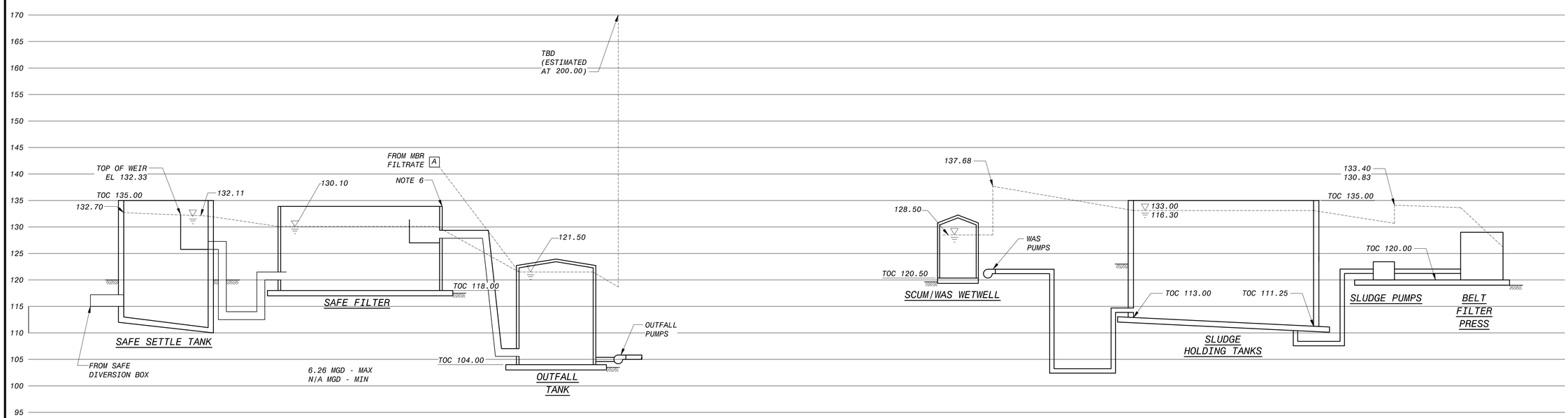

HYDRAULIC PROFILE - SAFE SYSTEM

VERT SCALE: 1" = 10'-0"

HYDRAULIC PROFILE - RESIDUALS SYSTEM

VERT SCALE: 1" = 10'-0"

NOTES:

1. PEAK HOUR FLOW UP TO THE SPLITTER BOX 8.14 MGD.
2. PEAK HOUR FLOW BETWEEN SPLITTER BOX AND MBR IS 1.88 MGD.
3. PEAK HOUR FLOW DOWNSTREAM OF MBR IS 1.16 MGD.
4. THE MINIMUM DIURNAL FLOW MODELED IS 0.25 MGD. THIS OCCURS THROUGHOUT THE LIQUID STREAM OF THE PLANT.
5. THE TOP NUMBER ON THE HYDRAULIC PROFILE IS THE MAXIMUM HGL. THE LOWER NUMBER ON THE HYDRAULIC PROFILE IS THE MINIMUM HGL.
6. STAINLESS STEEL TANK FURNISHED WITH EQUIPMENT PACKAGE. TOP OF TANK EL IS VENDOR SPECIFIC WITH AT LEAST 2' OF FREEBOARD.
7. NOTE FINISHED GRADE ELEVATIONS SHOWN THAT ARE ADJACENT TO TANKS AND CONCRETE SLABS ARE APPROXIMATE. SEE CIVIL GRADING AND PAVING DRAWINGS FOR EXACT FINISHED GRADE ELEVATIONS.

60% SUBMITTAL - NOT FOR CONSTRUCTION

NO.	BY	CHK	APP	DATE	REVISIONS AND RECORD OF USE
B	KEZ	RT	EVB	7/30/2019	60% SUBMITTAL
A	KEZ	RWF	EVB	3/5/2019	30% SUBMITTAL

BLACK & VEATCH JOINT VENTURE

BLACK & VEATCH

FILANC

CITY OF MORRO BAY
MORRO BAY WATER RECLAMATION FACILITY (WRF)

GENERAL HYDRAULIC PROFILES

DESIGNED: EVB, KEZ
DETAILED: MAK
CHECKED:
APPROVED:
DATE:

0 1/2 1
IF THIS BAR DOES NOT MEASURE 1" THEN DRAWING IS NOT TO FULL SCALE

PROJECT NO. 400530

00-G-007
SHEET
OF

D400530
FD81203_PW

| SPECIFIED ROOM OR AREA | | | HAZARDOUS MATERIALS | | | BUILDING CODE | | | | | | | | | | | | | | FIRE PROTECTION | | | | VENTILATION | | | FIRE CODE REQUIREMENTS | | | | | | | | | | | | | |

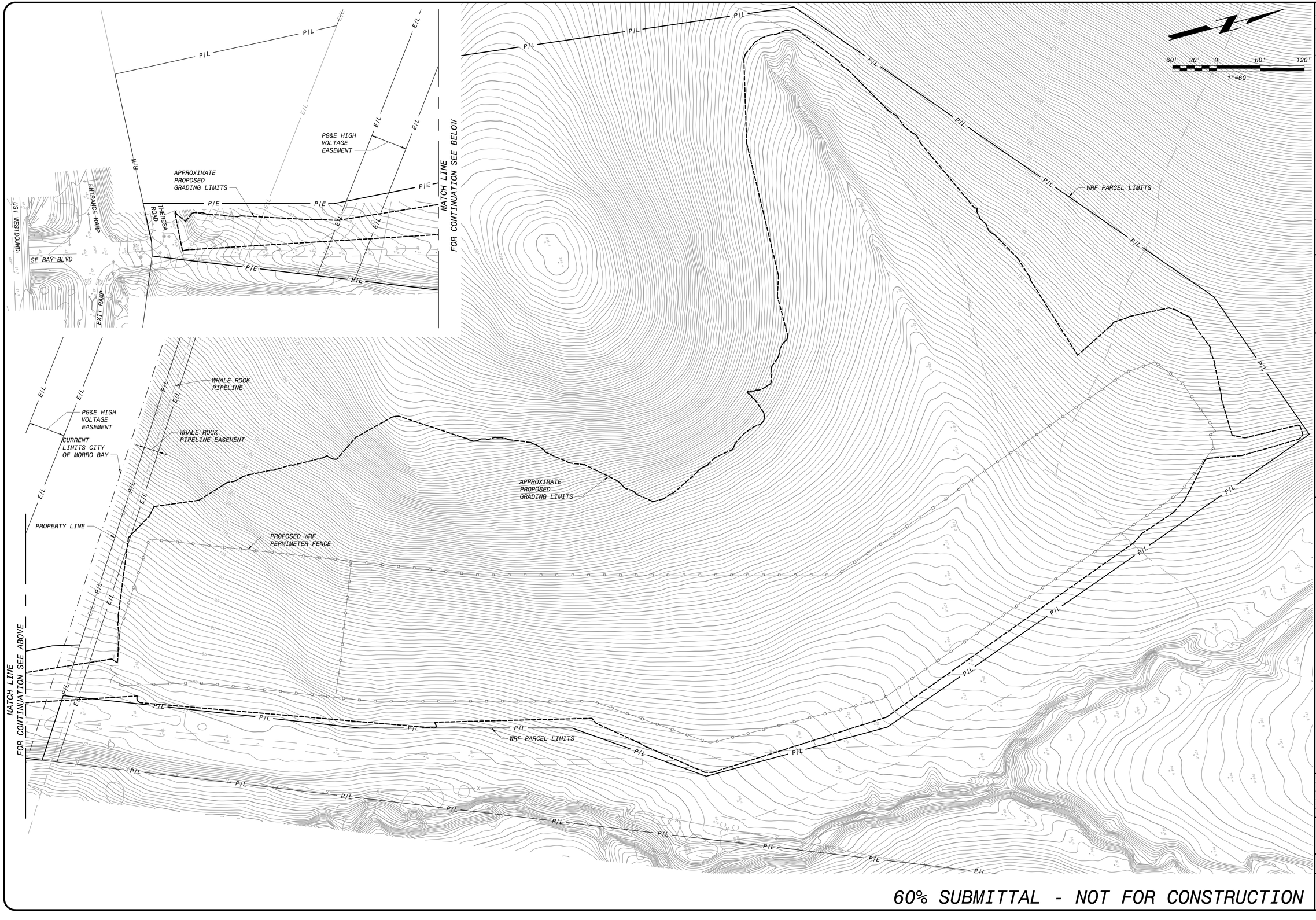

60% SUBMITTAL - NOT FOR CONSTRUCTION

NO.	BY	CHK	APP
B	EVB	RTB	EVB
A	ENY	RWF	EVB

DATE	REVISIONS AND RECORD OF USE
7/30/2019	60% SUBMITTAL
3/5/2019	30% SUBMITTAL

BLACK & VEATCH

JOINT VENTURE

FILANC

BLACK & VEATCH

CITY OF MORRO BAY
MORRO BAY WATER
RECLAMATION FACILITY (WRF)

SITE - OVERALL
CIVIL
EXISTING GRADE AND FEATURES

DESIGNED: EVB
DETAILED: SMM
CHECKED:
APPROVED:
DATE:

0 1/2 1
IF THIS BAR DOES NOT MEASURE 1" THEN DRAWING IS NOT TO FULL SCALE

PROJECT NO.
400530

10-C-001
SHEET
OF

FD9000A
D400530
PLOTTED: 7/30/2019 12:26 PM FILE: C:\pw_working\bvw_americas\d0683625\400530-10-C-001.dwg

P/L
E/L
P/E
R/W
PG&E HIGH VOLTAGE EASEMENT
CURRENT LIMITS CITY OF MORRO BAY
PROPERTY LINE
WHALE ROCK PIPELINE
WHALE ROCK PIPELINE EASEMENT
US1 WESTBOUND
ENTRANCE RAMP
EXIT RAMP
SE BAY BLVD
THERESA ROAD
MATCH LINE FOR CONTINUATION SEE BELOW
MATCH LINE FOR CONTINUATION SEE ABOVE
WRF PARCEL LIMITS
SWALE N1
SWALE N2
SWALE N3
SWALE N4
SWALE N5
SWALE N6
SWALE S1
SWALE S2
SWALE S3
SWALE S4
SWALE S5
SWALE S6
SWALE S7
SWALE S8
FILL ZONE CENTRAL UNDERDRAIN
CENTRAL UNDERDRAIN OUTLET
CATCH BASIN B
CATCH BASIN C
PROPOSED WRF PERMIMETER FENCE
STORMWATER POND 1
STORMWATER POND 2
OUTLET CONTROL STRUCTURE P1
OUTLET CONTROL STRUCTURE P2
STORMDRAIN P1
STORMDRAIN P2
STORMDRAIN B
STORMDRAIN C
DISCHARGE LEVEL SPREADER A
DISCHARGE LEVEL SPREADER B
DISCHARGE LEVEL SPREADER C
DISCHARGE LEVEL SPREADER P1
LEVEL-SPREADER B INLET
LEVEL-SPREADER C INLET
60' 30' 0 60' 120'
1"=60'

NO.	BY	CHK	APP'D	DATE	REVISIONS AND RECORD OF USE
B	EVB	RTB	EVB	7/30/2019	60% SUBMITTAL

BLACK & VEATCH
JOINT VENTURE
FILANC
BLACK & VEATCH

CITY OF MORRO BAY
MORRO BAY WATER
RECLAMATION FACILITY (WRF)

SITE - OVERALL
CIVIL
SITE PREP FINISHED GRADE OVERVIEW

DESIGNED: EVB
DETAILED: SMM
CHECKED:
APPROVED:
DATE:

0 1/2 1
IF THIS BAR DOES NOT MEASURE 1" THEN DRAWING IS NOT TO FULL SCALE

PROJECT NO.
400530

10-C-002
SHEET
OF

60% SUBMITTAL - NOT FOR CONSTRUCTION

FD9000A
D400530
PLOTTED: 7/30/2019 12:28 PM FILE: C:\pw_working\bvw_americas\d0683625\400530-10-C-002.dwg

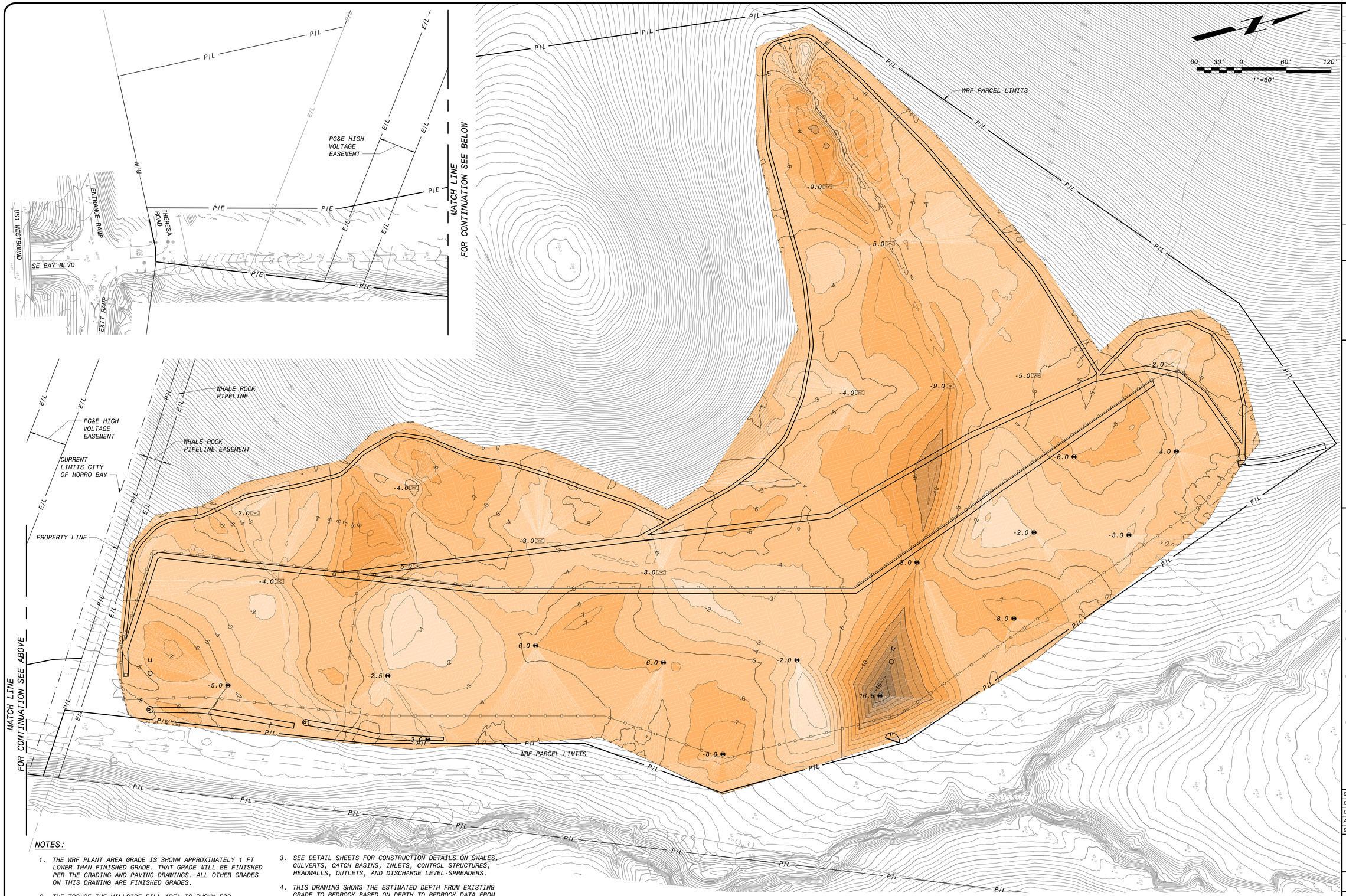

NOTES:

1. THE WRF PLANT AREA GRADE IS SHOWN APPROXIMATELY 1 FT LOWER THAN FINISHED GRADE. THAT GRADE WILL BE FINISHED PER THE GRADING AND PAVING DRAWINGS. ALL OTHER GRADES ON THIS DRAWING ARE FINISHED GRADES.
2. THE TOP OF THE HILLSIDE FILL AREA IS SHOWN FOR BALANCED SITE. THIS AREA CAN BE LOWERED OR RAISED AS NEEDED TO ADJUST FINAL FILL QUANTITY. CONSULT WITH ENGINEERING FOR DETAILS.
3. SEE DETAIL SHEETS FOR CONSTRUCTION DETAILS ON SWALES, CULVERTS, CATCH BASINS, INLETS, CONTROL STRUCTURES, HEADWALLS, OUTLETS, AND DISCHARGE LEVEL-SPREADERS.
4. THIS DRAWING SHOWS THE ESTIMATED DEPTH FROM EXISTING GRADE TO BEDROCK BASED ON DEPTH TO BEDROCK DATA FROM THE PRELIMINARY GEOTECHNICAL INVESTIGATION REPORT DATED 7/1/2019. THIS REPRESENTS THE ESTIMATED DEPTH OF CLAY MATERIAL.

60% SUBMITTAL - NOT FOR CONSTRUCTION

NO.	BY	CHK	APP
B	EVB	RTB	EVB

REVISIONS AND RECORD OF USE

DATE: 7/30/2019 — 60% SUBMITTAL

BLACK & VEATCH

JOINT VENTURE

FILANC

BLACK & VEATCH

CITY OF MORRO BAY
MORRO BAY WATER
RECLAMATION FACILITY (WRF)

SITE - OVERALL
CIVIL
DEPTH FROM EXISTING GRADE TO BEDROCK

DESIGNED: EVB
DETAILED: SMM
CHECKED:
APPROVED:
DATE:

0 1/2 1
IF THIS BAR DOES NOT MEASURE 1" THEN DRAWING IS NOT TO FULL SCALE

PROJECT NO. 400530

10-C-003
SHEET
OF

FD9000A
D400530
PLOTTED: 7/30/2019 12:30 PM FILE: C:\pw_working\bvw_americas\d0683625\400530-10-C-003.dwg

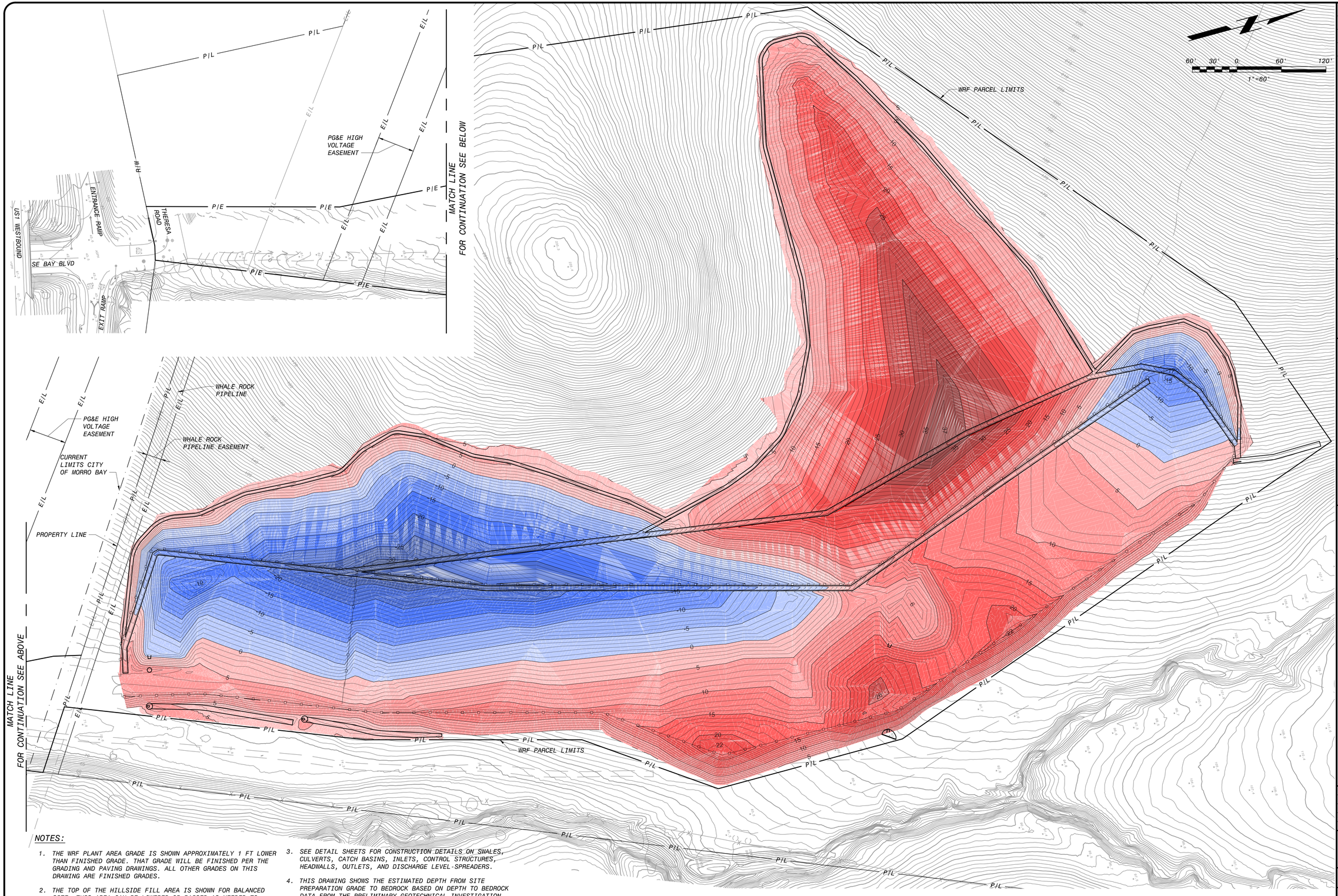

NOTES:

1. THE WRF PLANT AREA GRADE IS SHOWN APPROXIMATELY 1 FT LOWER THAN FINISHED GRADE. THAT GRADE WILL BE FINISHED PER THE GRADING AND PAVING DRAWINGS. ALL OTHER GRADES ON THIS DRAWING ARE FINISHED GRADES.
2. THE TOP OF THE HILLSIDE FILL AREA IS SHOWN FOR BALANCED SITE. THIS AREA CAN BE LOWERED OR RAISED AS NEEDED TO ADJUST FINAL FILL QUANTITY. CONSULT WITH ENGINEERING FOR DETAILS.
3. SEE DETAIL SHEETS FOR CONSTRUCTION DETAILS ON SWALES, CULVERTS, CATCH BASINS, INLETS, CONTROL STRUCTURES, HEADWALLS, OUTLETS, AND DISCHARGE LEVEL-SPREADERS.
4. THIS DRAWING SHOWS THE ESTIMATED DEPTH FROM SITE PREPARATION GRADE TO BEDROCK BASED ON DEPTH TO BEDROCK DATA FROM THE PRELIMINARY GEOTECHNICAL INVESTIGATION REPORT DATED 7/1/2019. POSITIVE VALVES IN RED AREAS INDICATE AREAS OF FILL OVER BEDROCK. NEGATIVE VALUES IN BLUE AREAS INDICATE AREAS OF CUT INTO BEDROCK.

60% SUBMITTAL - NOT FOR CONSTRUCTION

NO.	BY	CHK	APP	DATE	REVISIONS AND RECORD OF USE
B	EVB	RTB	EVB	7/30/2019	60% SUBMITTAL

BLACK & VEATCH JOINT VENTURE
BLACK & VEATCH
FILANC

CITY OF MORRO BAY
MORRO BAY WATER RECLAMATION FACILITY (WRF)

SITE - OVERALL CIVIL
DEPTH FROM SITE PREP GRADE TO BEDROCK

DESIGNED: EVB
DETAILED: SMM
CHECKED:
APPROVED:
DATE:

0 1/2 1
IF THIS BAR DOES NOT MEASURE 1" THEN DRAWING IS NOT TO FULL SCALE

PROJECT NO. 400530

10-C-004
SHEET
OF

F08000A
D400530
PLOTTED: 7/30/2019 12:31 PM FILE: C:\pw_working\bvw_americas\d0683625\400530-10-C-004.dwg

P/L
E/L
P/E
HW
PG&E HIGH VOLTAGE EASEMENT
ENTRANCE RAMP
US1 WESTBOUND
THERESA ROAD
SE BAY BLVD
EXIT RAMP
MATCH LINE
FOR CONTINUATION SEE BELOW
WHALE ROCK PIPELINE
WHALE ROCK PIPELINE EASEMENT
CURRENT LIMITS CITY OF MORRO BAY
PROPERTY LINE
WRF PARCEL LIMITS
HILLSIDE FILL AREA
60' 30' 0 60' 120'
1"=60'

NO.	BY	CHK	APP'D
B	EVB	RTB	EVB

REVISIONS AND RECORD OF USE

DATE	
7/30/2019	60% SUBMITTAL

BLACK & VEATCH
JOINT VENTURE
FILANC
BLACK & VEATCH

CITY OF MORRO BAY
MORRO BAY WATER RECLAMATION FACILITY (WRF)

SITE - OVERALL
CIVIL
DEPTH FROM SITE PREP GRADE TO EXISTING GRADE

DESIGNED: EVB
DETAILED: SMM
CHECKED:
APPROVED:
DATE:

0 1/2 1
IF THIS BAR DOES NOT MEASURE 1" THEN DRAWING IS NOT TO FULL SCALE

PROJECT NO.
400530

10-C-005
SHEET
OF

NOTES:

1. THE WRF PLANT AREA GRADE IS SHOWN APPROXIMATELY 1 FT LOWER THAN FINISHED GRADE. THAT GRADE WILL BE FINISHED PER THE GRADING AND PAVING DRAWINGS. ALL OTHER GRADES ON THIS DRAWING ARE FINISHED GRADES.
2. THE TOP OF THE HILLSIDE FILL AREA IS SHOWN FOR BALANCED SITE. THIS AREA CAN BE LOWERED OR RAISED AS NEEDED TO ADJUST FINAL FILL QUANTITY. CONSULT WITH ENGINEERING FOR DETAILS.
3. SEE DETAIL SHEETS FOR CONSTRUCTION DETAILS ON SWALES, CULVERTS, CATCH BASINS, INLETS, CONTROL STRUCTURES, HEADWALLS, OUTLETS, AND DISCHARGE LEVEL-SPREADERS.
4. THIS DRAWING SHOWS THE ESTIMATED DEPTH FROM SITE PREPARATION GRADE TO EXISTING GRADE. POSITIVE VALUES IN RED AREAS INDICATE AREAS OF NET FILL. NEGATIVE VALUES IN BLUE AREAS INDICATE AREAS OF NET CUT.

60% SUBMITTAL - NOT FOR CONSTRUCTION

FB9000A
D400530
PLOTTED: 7/30/2019 12:33 PM FILE: C:\pw_working\bvw_americas\d0683625\400530-10-C-005.dwg

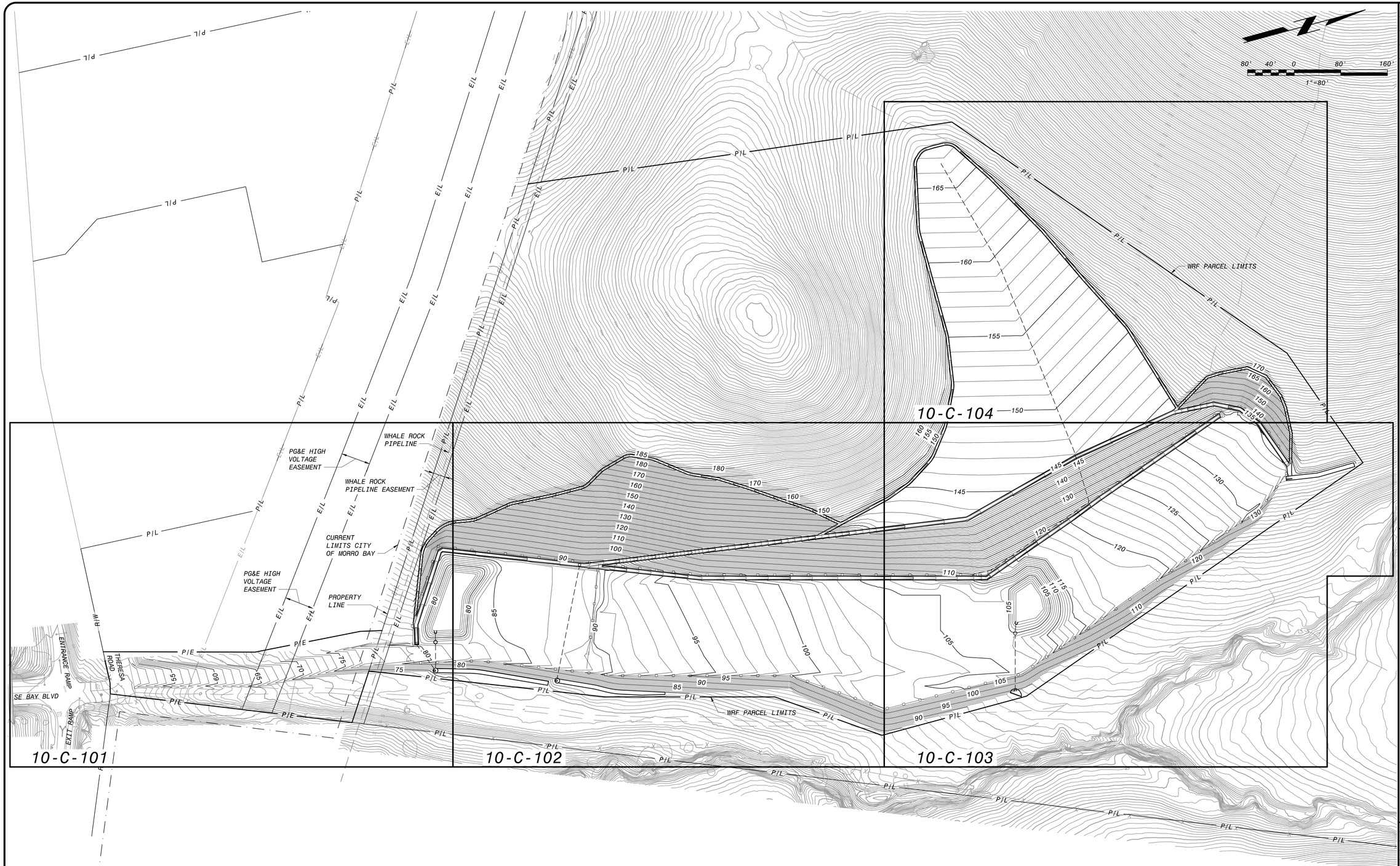

NOTES:

1. THE WRF PLANT AREA GRADE IS SHOWN APPROXIMATELY 1 FT LOWER THAN FINISHED GRADE. THAT GRADE WILL BE FINISHED PER THE GRADING AND PAVING DRAWINGS. ALL OTHER GRADES ON THIS DRAWING ARE FINISHED GRADES.
2. THE TOP OF THE HILLSIDE FILL AREA IS SHOWN FOR BALANCED SITE. THIS AREA CAN BE LOWERED OR RAISED AS NEEDED TO ADJUST FINAL FILL QUANTITY. CONSULT WITH ENGINEERING FOR DETAILS.
3. SEE DETAIL SHEETS FOR CONSTRUCTION DETAILS ON SWALES, CULVERTS, CATCH BASINS, INLETS, CONTROL STRUCTURES, HEADWALLS, OUTLETS, AND DISCHARGE LEVEL-SPREADERS.

60% SUBMITTAL - NOT FOR CONSTRUCTION

NO.	BY	CHK	APP	DATE	REVISIONS AND RECORD OF USE
B	EVB	RTB	EVB	7/30/2019	60% SUBMITTAL

BLACK & VEATCH

JOINT VENTURE

FILANC

BLACK&VEATCH

CITY OF MORRO BAY
MORRO BAY WATER
RECLAMATION FACILITY (WRF)

SITE - OVERALL
CIVIL
SITE PREP GRADING AND DRAINAGE KEY PLAN

DESIGNED: EVB
DETAILED: SMM
CHECKED:
APPROVED:
DATE:

0 1/2 1
IF THIS BAR DOES NOT MEASURE 1" THEN DRAWING IS NOT TO FULL SCALE

PROJECT NO.
400530

10-C-006
SHEET
OF

FD9000A
D400530
PLOTTED: 7/30/2019 12:34 PM FILE: C:\pw_working\bvw_americas\d0683625\400530-10-C-006.dwg



NOTES:

1. *THE WRF PLANT AREA GRADE IS SHOWN APPROXIMATELY 1 FT LOWER THAN FINISHED GRADE. THAT GRADE WILL BE FINISHED PER THE GRADING AND PAVING DRAWINGS. ALL OTHER GRADES ON THIS DRAWING ARE FINISHED GRADES.*
2. *THE TOP OF THE HILLSIDE FILL AREA IS SHOWN FOR BALANCED SITE. THIS AREA CAN BE LOWERED OR RAISED AS NEEDED TO ADJUST FINAL FILL QUANTITY. CONSULT WITH ENGINEERING FOR DETAILS.*
3. *SEE DETAIL SHEETS FOR CONSTRUCTION DETAILS ON SWALES, CULVERTS, CATCH BASINS, INLETS, CONTROL STRUCTURES, HEADWALLS, OUTLETS, AND DISCHARGE LEVEL-SPREADERS.*
4. *NOTE NOT USED.*
5. *FILL ZONES SHALL BE BENCHED INTO BEDROCK AND DRAIN PIPING SHALL BE INSTALLED PER THE REQUIREMENTS IN THE GEOTECHNICAL REPORT.*

NO.	BY	CHK	APP	DATE	REVISIONS AND RECORD OF USE
B	EVB	RTB	EVB	7/30/2019	60% SUBMITTAL

BLACK & VEATCH JOINT VENTURE — BLACK & VEATCH — FILANC

CITY OF MORRO BAY
MORRO BAY WATER RECLAMATION FACILITY (WRF)

SITE - AREA 1
CIVIL
SITE PREP GRADING AND DRAINAGE PLAN

DESIGNED:	EVB
DETAILED:	SMM
CHECKED:	
APPROVED:	
DATE:	

0 1/2 1
IF THIS BAR DOES NOT MEASURE 1" THEN DRAWING IS NOT TO FULL SCALE

PROJECT NO. 400530

10-C-101
SHEET
OF

60% SUBMITTAL - NOT FOR CONSTRUCTION

F08000A
D400330
PLOTTED: 7/30/2019 12:58 PM FILE: C:\pw_working\bvw_americas\d0683625\400530-10-C-101-104.dwg

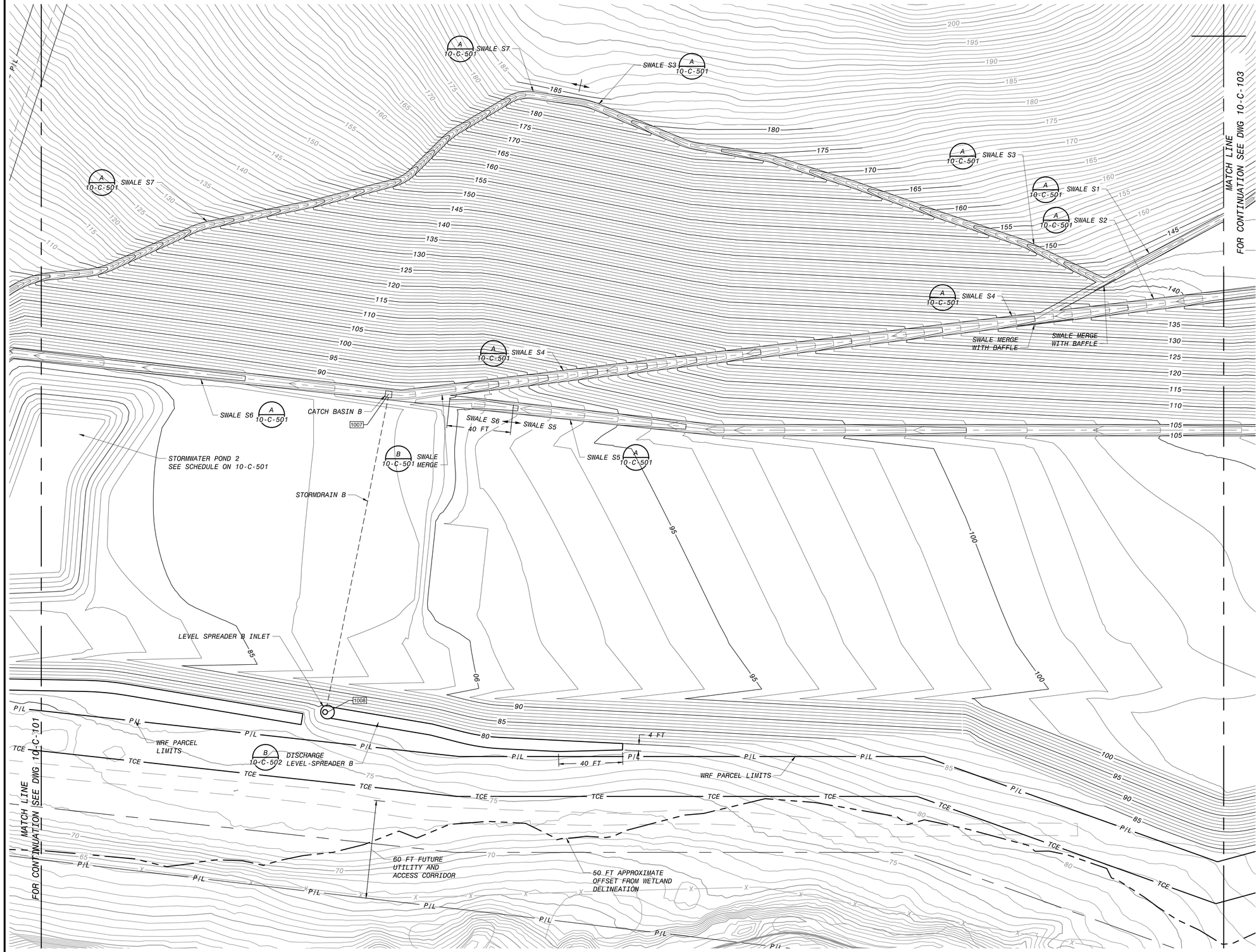

NOTES:

1. THE WRF PLANT AREA GRADE IS SHOWN APPROXIMATELY 1 FT LOWER THAN FINISHED GRADE. THAT GRADE WILL BE FINISHED PER THE GRADING AND PAVING DRAWINGS. ALL OTHER GRADES ON THIS DRAWING ARE FINISHED GRADES.
2. THE TOP OF THE HILLSIDE FILL AREA IS SHOWN FOR BALANCED SITE. THIS AREA CAN BE LOWERED OR RAISED AS NEEDED TO ADJUST FINAL FILL QUANTITY. CONSULT WITH ENGINEERING FOR DETAILS.
3. SEE DETAIL SHEETS FOR CONSTRUCTION DETAILS ON SWALES, CULVERTS, CATCH BASINS, INLETS, CONTROL STRUCTURES, HEADWALLS, OUTLETS, AND DISCHARGE LEVEL-SPREADERS.
4. NOTE NOT USED.
5. FILL ZONES SHALL BE BENCHED INTO BEDROCK AND DRAIN PIPING SHALL BE INSTALLED PER THE REQUIREMENTS IN THE GEOTECHNICAL REPORT.

NO.	BY	CHK	APP	DATE	REVISIONS AND RECORD OF USE
B	EVB	RTB	EVB	7/30/2019	60% SUBMITTAL

BLACK & VEATCH
JOINT VENTURE
BLACK & VEATCH
FILANC

CITY OF MORRO BAY
MORRO BAY WATER
RECLAMATION FACILITY (WRF)

SITE - AREA 2
CIVIL
SITE PREP GRADING DRAINAGE PLAN

DESIGNED: EVB
DETAILED: SMM
CHECKED:
APPROVED:
DATE:

0 1/2 1
IF THIS BAR DOES NOT MEASURE 1" THEN DRAWING IS NOT TO FULL SCALE

PROJECT NO.
400530

10-C-102
SHEET
OF

60% SUBMITTAL - NOT FOR CONSTRUCTION

FB9000A
D400330
PLOTTED: 7/30/2019 1:00 PM FILE: C:\pw_working\bvw_americas\d0683625\400530-10-C-101-104.dwg

MATCH LINE
FOR CONTINUATION SEE DWG 10-C-104

MATCH LINE
FOR CONTINUATION SEE DWG 10-C-102

A 10-C-501 SWALE S2

A 10-C-501 SWALE N2

A 10-C-501 SWALE S1

A 10-C-501 SWALE S2

A 10-C-501 SWALE S5

A 10-C-501 SWALE S5

A 10-C-501 SWALE N4

A 10-C-501 SWALE N5

B 10-C-501 SWALE MERGE

A 10-C-501 SWALE N6

C 10-C-502 DISCHARGE LEVEL-SPREADER A

STORMWATER POND 1
SEE SCHEDULE ON 10-C-501

1010

A 10-C-502 STORMWATER CONTROL STRUCTURE P1

STORMDRAIN P1

1011

OUTLET P1

D 10-C-502 DISCHARGE LEVEL-SPREADER P1

50 FT APPROXIMATE OFFSET FROM WETLAND DELINEATION

60 FT FUTURE UTILITY AND ACCESS CORRIDOR

P/L

TCE

NOTES:

1. THE WRF PLANT AREA GRADE IS SHOWN APPROXIMATELY 1 FT LOWER THAN FINISHED GRADE. THAT GRADE WILL BE FINISHED PER THE GRADING AND PAVING DRAWINGS. ALL OTHER GRADES ON THIS DRAWING ARE FINISHED GRADES.
2. THE TOP OF THE HILLSIDE FILL AREA IS SHOWN FOR BALANCED SITE. THIS AREA CAN BE LOWERED OR RAISED AS NEEDED TO ADJUST FINAL FILL QUANTITY. CONSULT WITH ENGINEERING FOR DETAILS.
3. SEE DETAIL SHEETS FOR CONSTRUCTION DETAILS ON SWALES, CULVERTS, CATCH BASINS, INLETS, CONTROL STRUCTURES, HEADWALLS, OUTLETS, AND DISCHARGE LEVEL-SPREADERS.
4. NOTE NOT USED.
5. FILL ZONES SHALL BE BENCHED INTO BEDROCK AND DRAIN PIPING SHALL BE INSTALLED PER THE REQUIREMENTS IN THE GEOTECHNICAL REPORT.

30' 15' 0 30' 60'
1"=30'

60% SUBMITTAL - NOT FOR CONSTRUCTION

NO.	BY	CHK	APP	DATE	REVISIONS AND RECORD OF USE
B	EVB	RTB	EVB	7/30/2019	60% SUBMITTAL

BLACK & VEATCH
JOINT VENTURE
FILANC
BLACK & VEATCH

CITY OF MORRO BAY
MORRO BAY WATER
RECLAMATION FACILITY (WRF)

SITE - AREA 3
CIVIL
SITE PREP GRADING DRAINAGE PLAN

DESIGNED: EVB
DETAILED: SMM
CHECKED:
APPROVED:
DATE:

0 1/2 1
IF THIS BAR DOES NOT MEASURE 1" THEN DRAWING IS NOT TO FULL SCALE

PROJECT NO.
400530

10-C-103
SHEET
OF

FB9000A
D400530
PLOTTED: 7/30/2019 12:58 PM FILE: C:\pw_working\bvw_americas\d0683625\400530-10-C-101-104.dwg

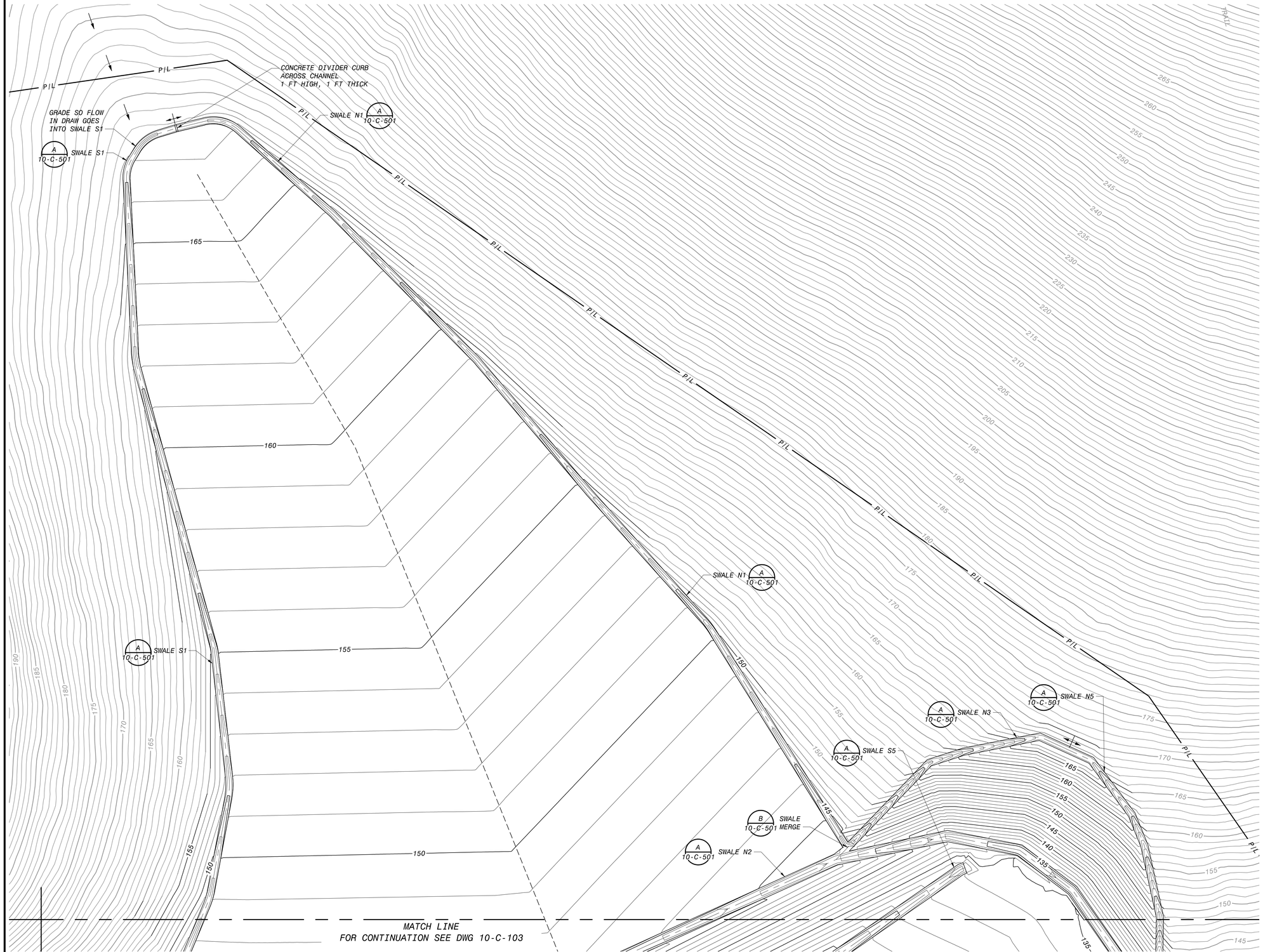

NOTES:

1. THE WRF PLANT AREA GRADE IS SHOWN APPROXIMATELY 1 FT LOWER THAN FINISHED GRADE. THAT GRADE WILL BE FINISHED PER THE GRADING AND PAVING DRAWINGS. ALL OTHER GRADES ON THIS DRAWING ARE FINISHED GRADES.
2. THE TOP OF THE HILLSIDE FILL AREA IS SHOWN FOR BALANCED SITE. THIS AREA CAN BE LOWERED OR RAISED AS NEEDED TO ADJUST FINAL FILL QUANTITY. CONSULT WITH ENGINEERING FOR DETAILS.
3. SEE DETAIL SHEETS FOR CONSTRUCTION DETAILS ON SWALES, CULVERTS, CATCH BASINS, INLETS, CONTROL STRUCTURES, HEADWALLS, OUTLETS, AND DISCHARGE LEVEL-SPREADERS.
4. NOTE NOT USED.
5. FILL ZONES SHALL BE BENCHED INTO BEDROCK AND DRAIN PIPING SHALL BE INSTALLED PER THE REQUIREMENTS IN THE GEOTECHNICAL REPORT.

NO.	BY	CHK	APP	DATE	REVISIONS AND RECORD OF USE
B	EVB	RTB	EVB	7/30/2019	60% SUBMITTAL

30' 15' 0 30' 60'
1"=30'

60% SUBMITTAL - NOT FOR CONSTRUCTION

BLACK & VEATCH
JOINT VENTURE
BLACK & VEATCH
FILANC

CITY OF MORRO BAY
MORRO BAY WATER
RECLAMATION FACILITY (WRF)

SITE - AREA 4
CIVIL
SITE PREP GRADING DRAINAGE PLAN

DESIGNED: EVB
DETAILED: SMM
CHECKED:
APPROVED:
DATE:

0 1/2 1
IF THIS BAR DOES NOT MEASURE 1" THEN DRAWING IS NOT TO FULL SCALE

PROJECT NO.
400530

10-C-104
SHEET
OF

PLOTTED: 7/30/2019 12:59 PM FILE: C:\pw_working\bvw_americas\d0683625\400530-10-C-101-104.dwg
FB9000A
D400530

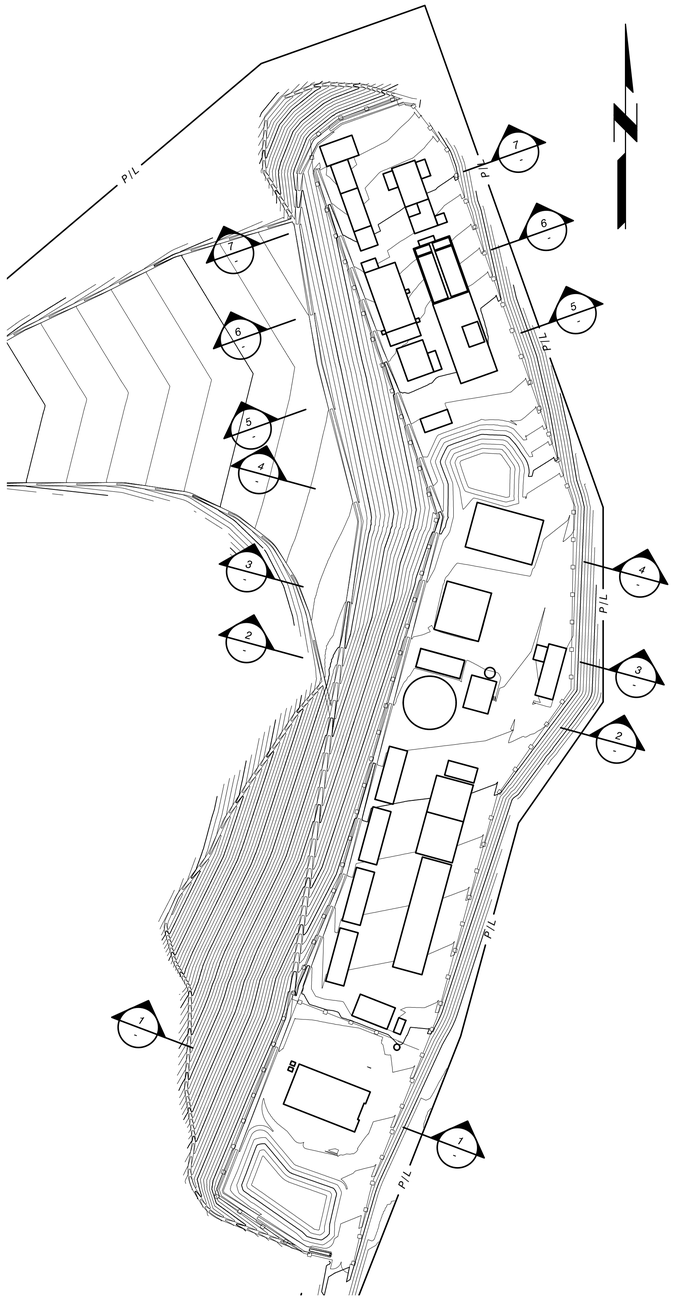

SECTION KEY PLAN
SCALE 1"=100'

LEGEND

- EXISTING GRADE
- ESTIMATED BEDROCK
- AVERAGE ESTIMATED BEDROCK
- FINISHED GRADE
- SITE PREPARATION GRADE
- OVER-EXCAVATION UNDER STRUCTURES

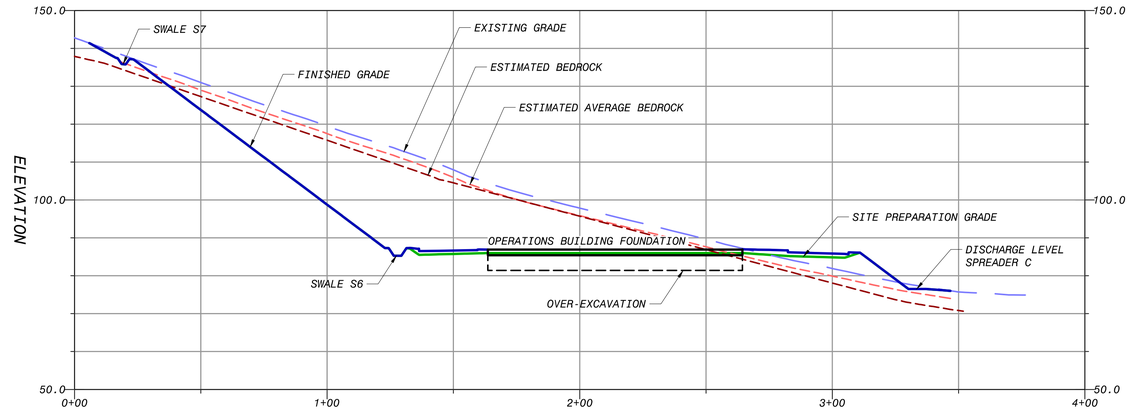

1 - OPERATIONS BULDING
SCALE: HORIZ 1"=30'
VERT 1"=20'

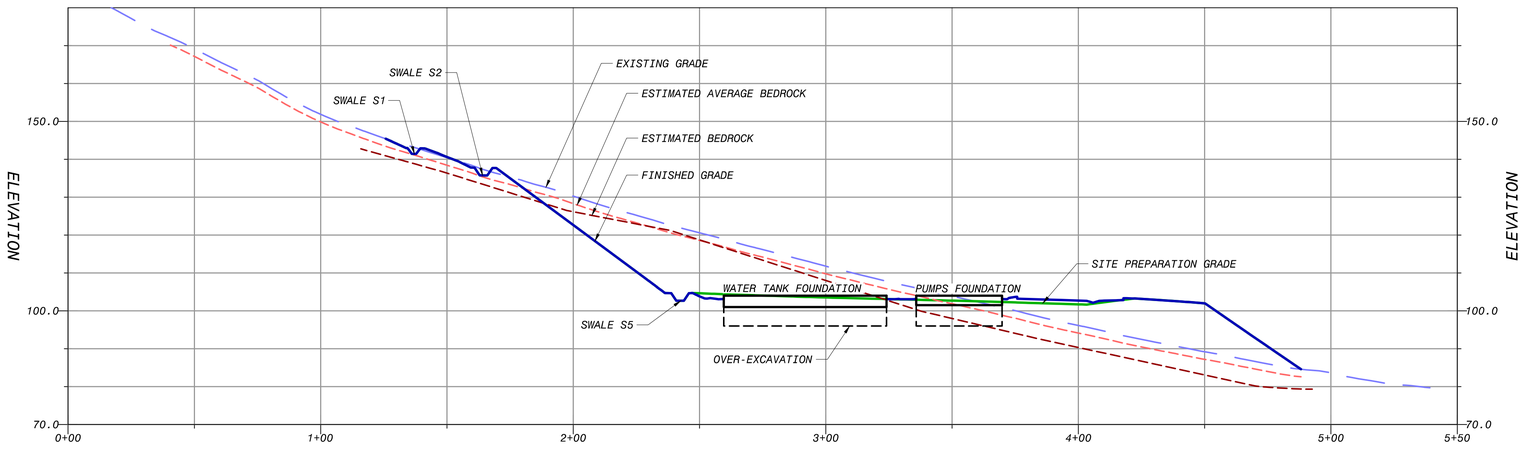

2 - PRODUCT WATER TANK AND PUMPS
SCALE: HORIZ 1"=30'
VERT 1"=20'

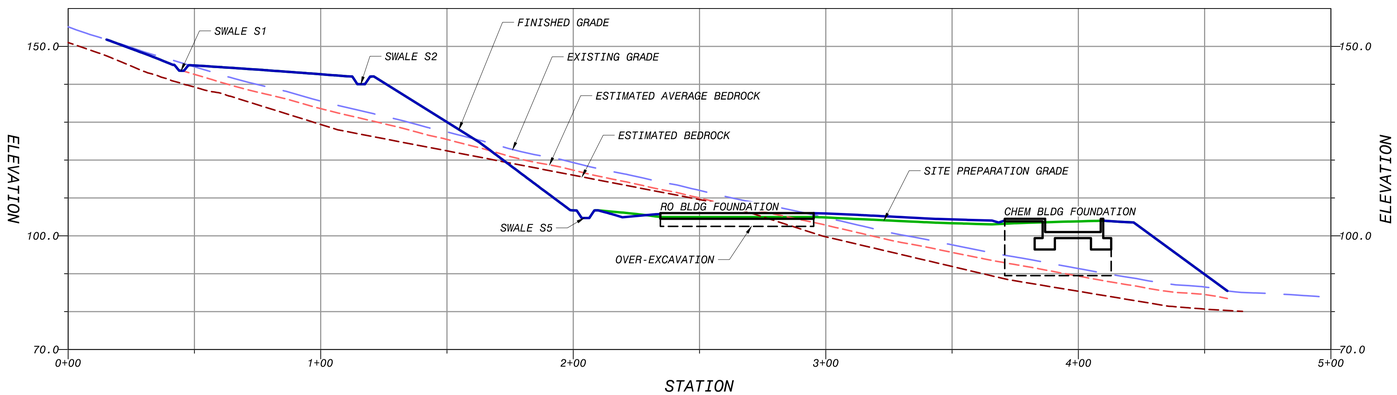

3 - CHEMICAL FACILITY AND RO/UV BUILDING
SCALE: HORIZ 1"=30'
VERT 1"=20'

NOTES:

1. THE WRF PLANT AREA GRADE IS SHOWN APPROXIMATELY 1 FT LOWER THAN FINISHED GRADE. THAT GRADE WILL BE FINISHED PER THE GRADING AND PAVING DRAWINGS. ALL OTHER GRADES ON THIS DRAWING ARE FINISHED GRADES.
2. THE TOP OF THE HILLSIDE FILL AREA IS SHOWN FOR BALANCED SITE. THIS AREA CAN BE LOWERED OR RAISED AS NEEDED TO ADJUST FINAL FILL QUANTITY. CONSULT WITH ENGINEERING FOR DETAILS.
3. SEE DETAIL SHEETS FOR CONSTRUCTION DETAILS ON SWALES, CULVERTS, CATCH BASINS, INLETS, CONTROL STRUCTURES, HEADWALLS, OUTLETS, AND DISCHARGE LEVEL-SPREADERS.
4. THIS DRAWING SHOWS THE ESTIMATED BEDROCK LEVEL AND ARITHMETIC AVERAGE BEDROCK LEVEL BASED ON DEPTH TO BEDROCK DATA FROM THE PRELIMINARY GEOTECHNICAL INVESTIGATION REPORT DATED 7/1/2019.

NO.	BY	CHK	APP	DATE	REVISIONS AND RECORD OF USE
B	EVB	RTB	EVB	7/30/2019	60% SUBMITTAL

BLACK & VEATCH JOINT VENTURE
BLACK & VEATCH
FILANC

CITY OF MORRO BAY
MORRO BAY WATER
RECLAMATION FACILITY (WRF)

SITE - OVERALL
CIVIL
SITE PREP SECTIONS 1

DESIGNED: EVB
DETAILED: SMM
CHECKED:
APPROVED:
DATE:

0 1/2 1
IF THIS BAR DOES NOT MEASURE 1" THEN DRAWING IS NOT TO FULL SCALE

PROJECT NO.
400530

10-C-301
SHEET
OF

60% SUBMITTAL - NOT FOR CONSTRUCTION

FB9000A
D400530
PLOTTED: 7/30/2019 1:01 PM FILE: C:\pw_working\bvw_americas\d0683625\400530-10-C-301.dwg

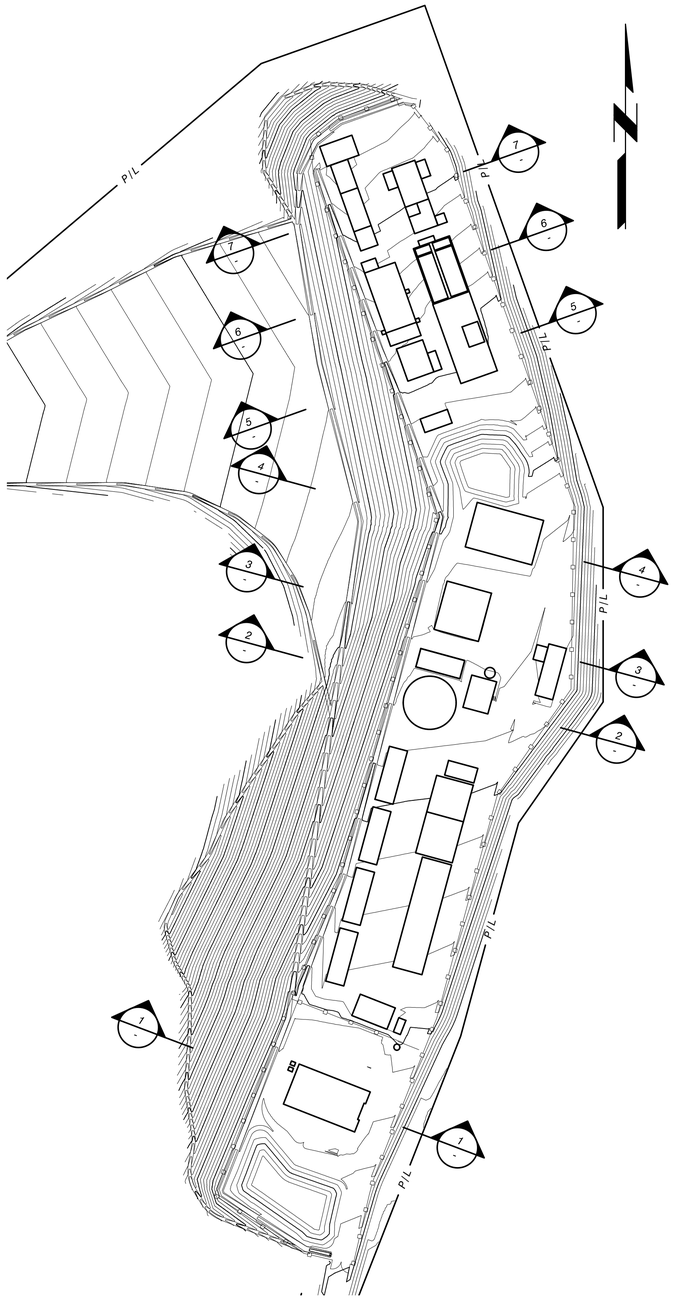

SECTION KEY PLAN
SCALE 1"=100'

LEGEND

- EXISTING GRADE
- ESTIMATED BEDROCK
- AVERAGE ESTIMATED BEDROCK
- FINISHED GRADE
- SITE PREPARATION GRADE
- OVER-EXCAVATION UNDER STRUCTURES

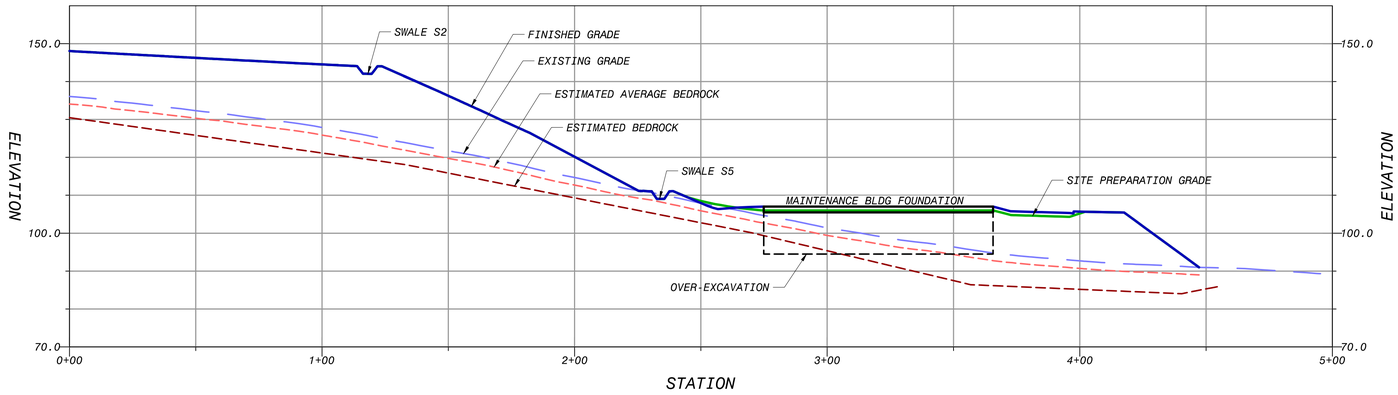

4 - MAINTENANCE BULDING
SCALE: HORIZ 1"=30'
VERT 1"=20'

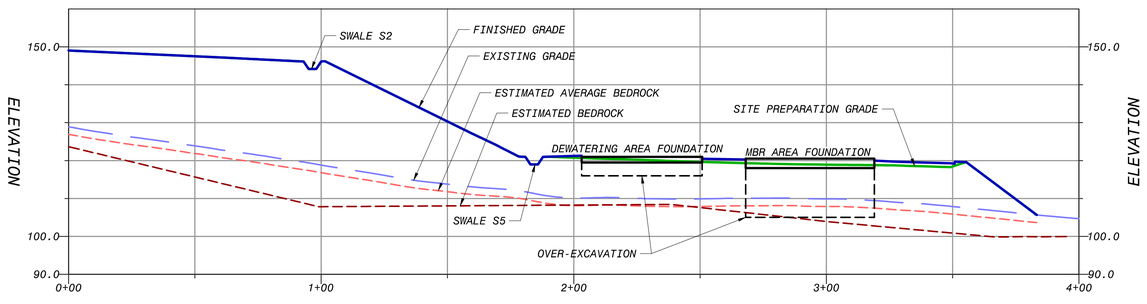

5 - MBR AND DEWATERING
SCALE: HORIZ 1"=30'
VERT 1"=20'

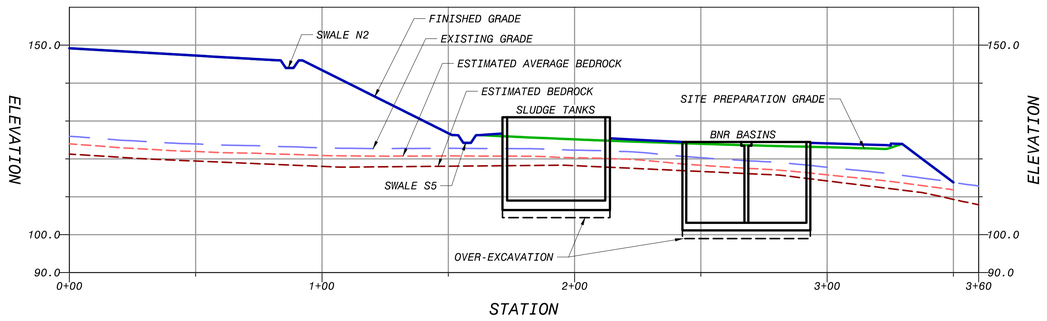

6 - BNR AND SLUDGE HOLDING TANKS
SCALE: HORIZ 1"=30'
VERT 1"=20'

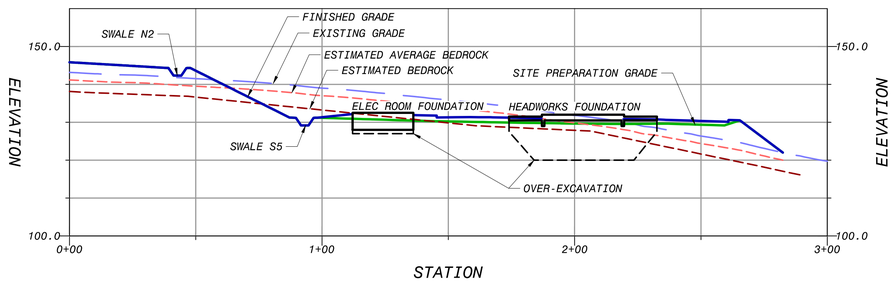

6 - HEADWORKS AND ELECTRICAL BUILDING
SCALE: HORIZ 1"=30'
VERT 1"=20'

NOTES:

1. THE WRF PLANT AREA GRADE IS SHOWN APPROXIMATELY 1 FT LOWER THAN FINISHED GRADE. THAT GRADE WILL BE FINISHED PER THE GRADING AND PAVING DRAWINGS. ALL OTHER GRADES ON THIS DRAWING ARE FINISHED GRADES.
2. THE TOP OF THE HILLSIDE FILL AREA IS SHOWN FOR BALANCED SITE. THIS AREA CAN BE LOWERED OR RAISED AS NEEDED TO ADJUST FINAL FILL QUANTITY. CONSULT WITH ENGINEERING FOR DETAILS.
3. SEE DETAIL SHEETS FOR CONSTRUCTION DETAILS ON SWALES, CULVERTS, CATCH BASINS, INLETS, CONTROL STRUCTURES, HEADWALLS, OUTLETS, AND DISCHARGE LEVEL-SPREADERS.
4. THIS DRAWING SHOWS THE ESTIMATED BEDROCK LEVEL AND ARITHMETIC AVERAGE BEDROCK LEVEL BASED ON DEPTH TO BEDROCK DATA FROM THE PRELIMINARY GEOTECHNICAL INVESTIGATION REPORT DATED 7/1/2019.

NO.	BY	CHK	APP	DATE	REVISIONS AND RECORD OF USE
B	EVB	RTB	EVB	7/30/2019	60% SUBMITTAL

BLACK & VEATCH
JOINT VENTURE
BLACK & VEATCH
FILANC

CITY OF MORRO BAY
MORRO BAY WATER
RECLAMATION FACILITY (WRF)

SITE - OVERALL
CIVIL
SITE PREP SECTIONS 2

DESIGNED: EVB
DETAILED: SMM
CHECKED:
APPROVED:
DATE:

0 1/2 1
IF THIS BAR DOES NOT MEASURE 1" THEN DRAWING IS NOT TO FULL SCALE

PROJECT NO.
400530

10-C-302
SHEET
OF

60% SUBMITTAL - NOT FOR CONSTRUCTION

FB9000A
D400530
PLOTTED: 7/30/2019 1:02 PM FILE: C:\pw_working\bvw_americas\d0683625\400530-10-C-302.dwg

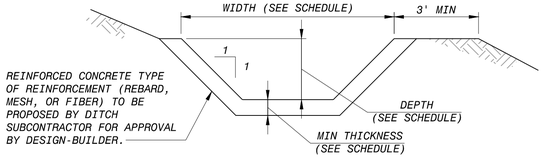

SWALE SCHEDULE				
SWALE	WIDTH	DEPTH	MIN THICKNESS	NOTES
N1	7'	2'	3"	
N2	7'	2'	3"	
N3	3'	1'	3"	
N4	7'	2'	3"	
N5	3'	1'	3"	
N6	7'	2'	3"	
S1	7'	2'	3"	
S2	7'	2'	3"	
S3	3'	1'	3"	
S4	7'	2'	3"	
S5	7'	2'	3"	PERMISSIBLE TO SUBSTITUTE CONCRETE LINING WITH CLASS I RIP-RAP (NOTE 1)
S6	7'	2'	3"	
S7	3'	1'	3"	
S8	7'	2'	3"	

A / - SWALE SECTION
NO SCALE

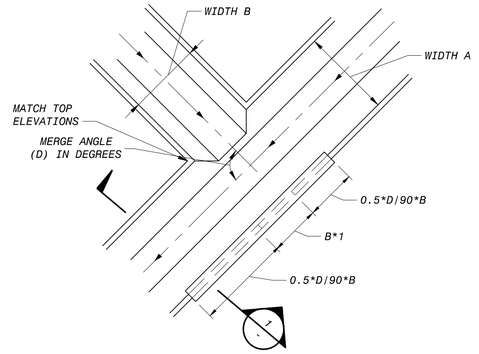

PLAN

B / - SWALE MERGE
NO SCALE

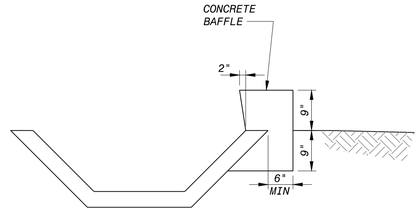

BAFFLE SECTION

1 / - SECTION
NO SCALE

STORM DRAIN SCHEDULE					
SD	SIZE	MATERIAL	INLET INV	OUTLET INV	LENGTH
P1	18"	C-900 PVC	101.00'	92.00'	103'
B	24"	C-900 PVC	80.67'	78.50'	197'
P2	18"	C-900 PVC	75.50'	75.00'	41'
C	24"	C-900 PVC	75.50'	75.00'	51'

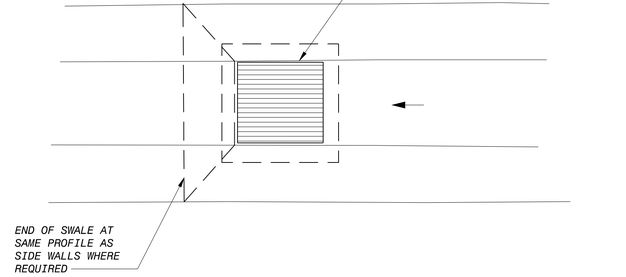

CATCH BASIN SCHEDULE								
	GRATE			BOX INTERNAL			OUTLET	
CATCH BASIN	RIM EL	LENGTH	WIDTH	FLOOR EL	LENGTH	WIDTH	INV	SIZE
B	86.67'	3'	3'	80.67'	3'	3'	80.67'	24" C-900 PVC
C	81.00'	3'	3'	75.50'	3'	3'	75.50'	24" C-900 PVC

C / - SWALE CATCH BASIN
NO SCALE

60% SUBMITTAL - NOT FOR CONSTRUCTION

NO.	BY	CHK	APP	REVISIONS AND RECORD OF USE	DATE
B	EVB	RTB	EVB	60% SUBMITTAL	7/19/2019

BLACK & VEATCH
JOINT VENTURE
BLACK & VEATCH
FILANC

CITY OF MORRO BAY
MORRO BAY WATER RECLAMATION FACILITY (WRF)

SITE - OVERALL CIVIL
SITE PREP GRADING AND DRAINAGE DETAILS 1

DESIGNED: EVB
DETAILED: SMM
CHECKED:
APPROVED:
DATE:

0 1/2 1
IF THIS BAR DOES NOT MEASURE 1" THEN DRAWING IS NOT TO FULL SCALE

PROJECT NO.
400530

10-C-501
SHEET
OF

FD7000
D400530

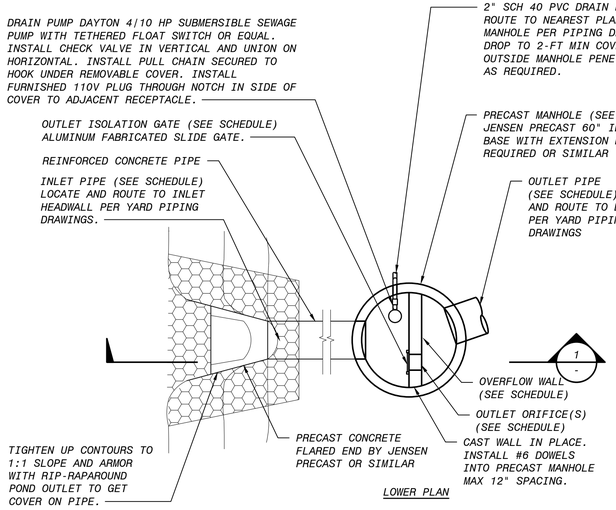

LOWER PLAN

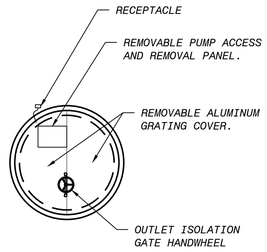

UPPER PLAN

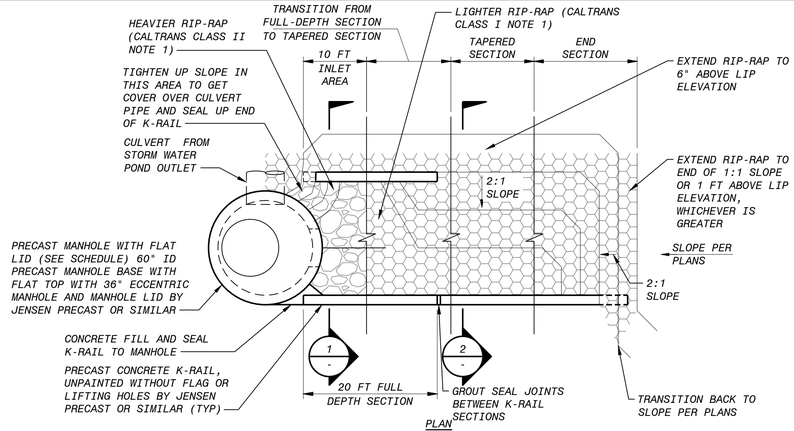

PLAN

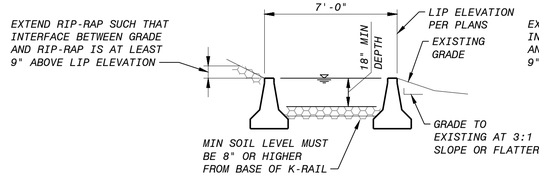

1 - FULL-DEPTH SECTION

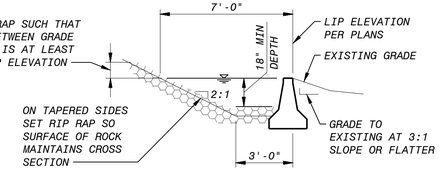

2 - TAPERED SECTION

B - DISCHARGE OUTLET LEVEL-SPREADER

1/4" = 1

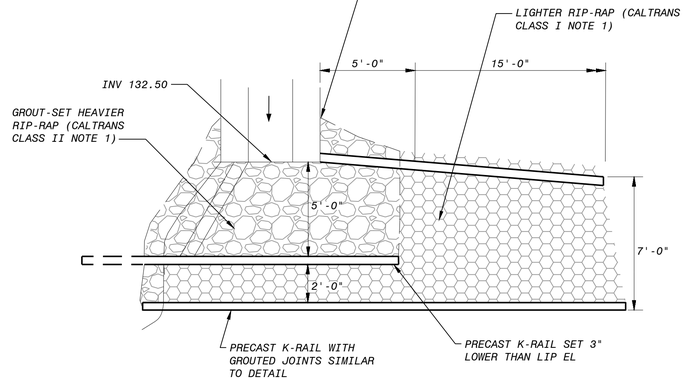

C - DISCHARGE LEVEL-SPREADER A

1/4" = 1

DISCHARGE OUTLET LEVEL-SPREADER SCHEDULE									
			INLET						
DESIGNATION	LENGTH	LIP EL	DETAIL	INLET INV	INLET SIZE	OUTLET INV	OUTLET SIZE	FLOOR EL	TOP EL
A	122'	134.00'	C/10-C-502	132.50'	7' SWALE	132.50'	CHANNEL	N/A	N/A
B	180'	80.00'	B/10-C-502	78.50'	24" C-900 PVC	78.50'	24"	78.50'	83.00'
C	190'	76.50'	B/10-C-502	75.00'	24" C-900 PVC	75.00'	24"	75.00'	79.50'
P1	20'	93.50'	D/10-C-502	92.00'	18" C-900 PVC	N/A	N/A	N/A	N/A

1 - SECTION

1/4" = 1' HORIZ NTS VERT

STORM POND OUTLET CONTROL STRUCTURE SCHEDULE		
	POND 1 (NORTH)	POND 2 (SOUTH)
INLET		
SIZE	18"	18"
MATERIAL	RCP	RCP
INLET INV	101.00'	75.50'
OUTLET INV	101.00'	75.50'
MANHOLE		
FLOOR EL	101.00'	75.50'
OVERFLOW EL	105.00'	80.70'
LID EL	107.50'	83.00'
PUMP	DAYTON 4/10 HP 70 GPM @ 15' (MODEL 3BB87 OR EQUAL)	N/A
LOWER ORIFICE		
SIZE	4"	6"
INV	101.50'	76.00'
UPPER ORIFICE		
SIZE	8"	10"
INV	102.40'	77.50'
ISOLATION GATE		
INV	101.50'	76.00'
WIDTH	12"	12"
LEAF HEIGHT	30"	30"
YOKE EL	110.50'	86.00'
LEAF TOP AT OPEN	106.50'	81.00'
ACTUATOR	HANDWHEEL	
MATERIALS	EPOXY-COATED STEEL/CAST IRON WITH ALUMINUM AND/OR SS LEAF AND SCREW. SEAL ALL FOUR SIDES.	
OUTLET		
SIZE	18"	18"
MATERIAL	C-900 PVC	C-900 PVC
INV	101.00'	75.50'

A - STORM POND OUTLET CONTROL STRUCTURE

1/4" = 1

NOTES:

1. RIP-RAP WITH GEOFABRIC UNDERLAYMENT PER CAL TRANS STANDARD SPECIFICATIONS DIVISION VIII SECTION 72 (ROCK SLOPE PROTECTION). SET RIP-RAP IN GROUT WHERE INDICATED.

4' 2' 0 4' 8'

1/4"=1'-0"

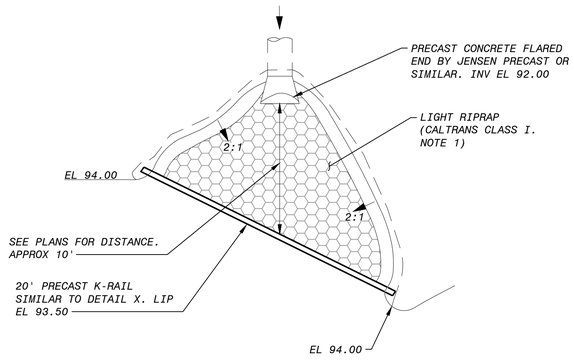

D - DISCHARGE LEVEL-SPREADER P1

1/4" = 1

60% SUBMITTAL - NOT FOR CONSTRUCTION

FD7000
D400330

NO.	BY	CHK	APP	DATE	REVISIONS AND RECORD OF USE
B	EVB	RTB	EVB	7/19/2019	60% SUBMITTAL

BLACK & VEATCH

JOINT VENTURE

BLACK & VEATCH

FILANC

CITY OF MORRO BAY
MORRO BAY WATER RECLAMATION FACILITY (WRF)

SITE - OVERALL CIVIL
SITE PREP GRADING AND DRAINAGE DETAILS 2

DESIGNED: EVB
DETAILED: SMM
CHECKED:
APPROVED:
DATE:

0 1/2 1

IF THIS BAR DOES NOT MEASURE 1" THEN DRAWING IS NOT TO FULL SCALE

PROJECT NO.
400530

10-C-502
SHEET
OF

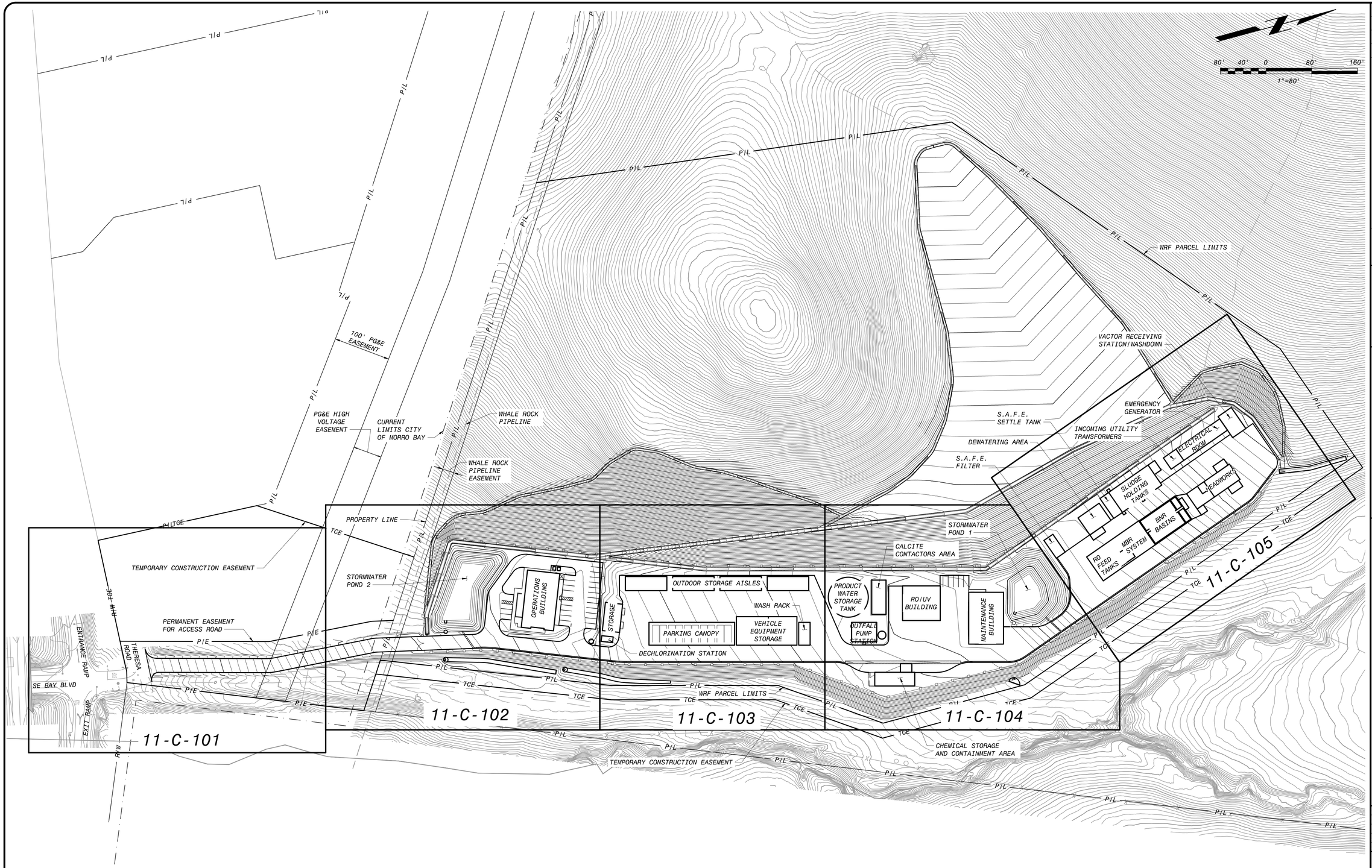

60% SUBMITTAL - NOT FOR CONSTRUCTION

NO.	BY	CHK	APP
B	EVB	RTB	EVB
A	ENY	RFW	EVB

DATE	REVISIONS AND RECORD OF USE
7/30/2019	60% SUBMITTAL
3/5/2019	30% SUBMITTAL

BLACK & VEATCH

JOINT VENTURE

FILANC

BLACK & VEATCH

CITY OF MORRO BAY
MORRO BAY WATER
RECLAMATION FACILITY (WRF)

SITE - OVERALL
CIVIL
GRADING AND PAVING KEY PLAN

DESIGNED: EBV
DETAILED: SMM
CHECKED:
APPROVED:
DATE:

0 1/2 1
IF THIS BAR DOES NOT MEASURE 1" THEN DRAWING IS NOT TO FULL SCALE

PROJECT NO.
400530

11-C-001
SHEET
OF

FD9000A
D400530
PLOTTED: 7/30/2019 1:04 PM FILE: C:\pw_working\bvw_americas\d0083625\400530_11-C-001.dwg

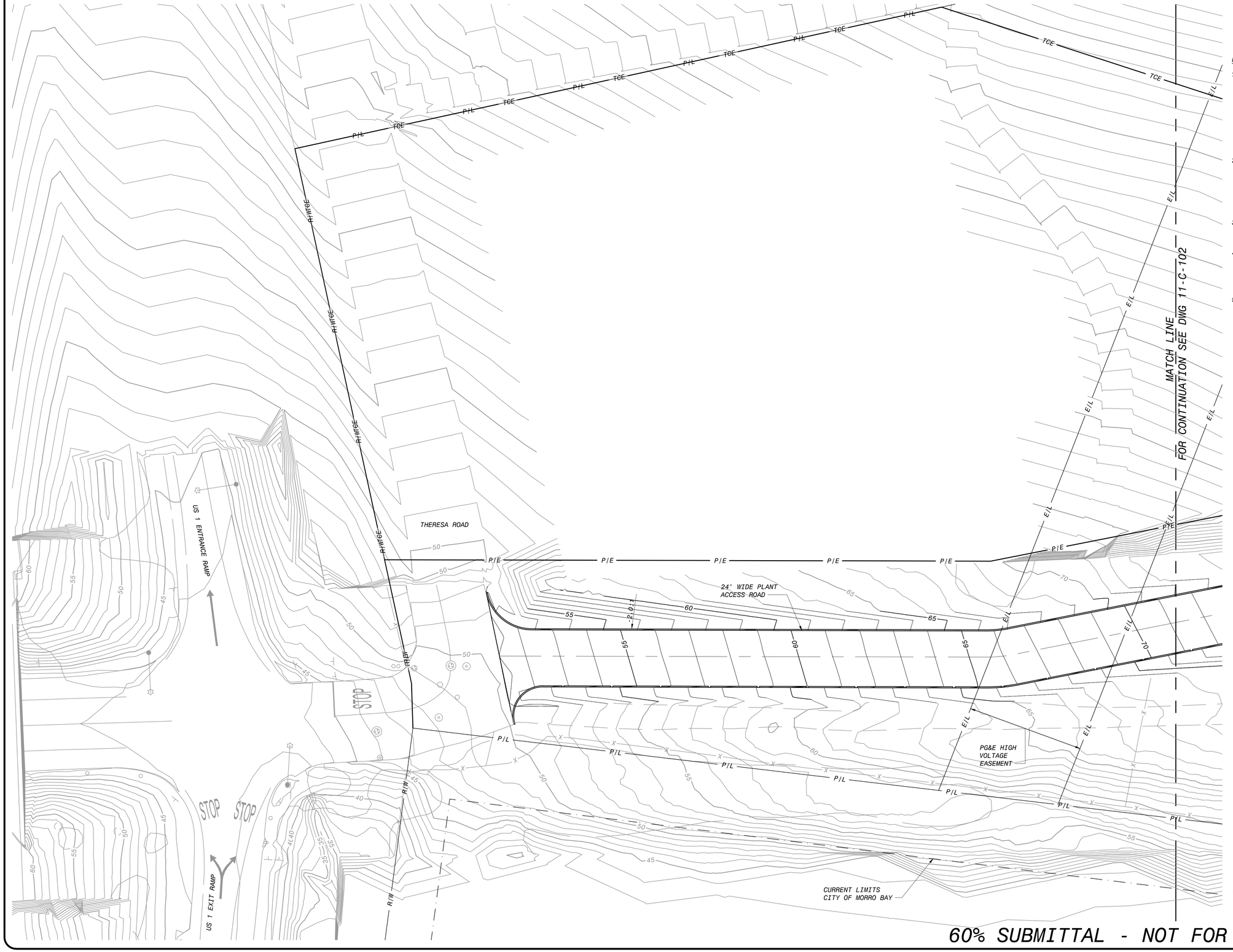

NOTES:

1. *OFFSITE AND HILLSIDE DRAINAGE IS CAPTURED VIA PERIMETER SWALES AND DIVERTED AROUND THE WRF PLANT SITE. THIS IS DONE TO SEGREGATE UNDEVELOPED AREA FLOWS FROM DEVELOPED WRF AREA FLOWS TO BETTER CONTROL STORMWATER QUALITY AND FLOW. SEE SITE PREPARATION DRAWINGS (AREA 10) AND DRAINAGE REPORT FOR DETAILS ABOUT THIS SYSTEM.*
2. *WRF PLANT AREA STORMWATER PONDS AND OUTLET CONTROL STRUCTURES ARE TO BE CONSTRUCTED WITH EARLY (SITE PREPARATION) WORK. SEE SITE PREPARATION DRAWINGS (AREA 10) AND DRAINAGE REPORT FOR DETAILS ABOUT THIS SYSTEM.*
3. *SEE STRUCTURAL DRAWINGS FOR SPECIFIC LOCATION OF INDICATED BUILDING COORDINATE POINTS.*
4. *ADA ACCESS ZONE. SLOPE PAVING FROM 1/4" BELOW INTERIOR ELEVATION AWAY AT NO MORE THAN 2% FOR 60" OUTWARD FROM BUILDING AND 42" FROM BOTH SIDES OF DOOR.*
5. *VEHICLE ACCESS ZONE. SLOPE PAVING FROM 1/4" BELOW INTERIOR ELEVATION AWAY AT NO MORE THAN 5% FOR 60" OUTWARD FROM BUILDING.*

NO.	BY	CHK	APP	DATE	REVISIONS AND RECORD OF USE
B	EVB	RTB	EVB	7/30/2019	60% SUBMITTAL

BLACK & VEATCH

JOINT VENTURE

FILANC

BLACK & VEATCH

CITY OF MORRO BAY
MORRO BAY WATER RECLAMATION FACILITY (WRF)

SITE - ACCESS ROAD AREA CIVIL
GRADING AND PAVING PLAN

DESIGNED:	EVB
DETAILED:	SMM
CHECKED:	
APPROVED:	
DATE:	

0 1/2 1

IF THIS BAR DOES NOT MEASURE 1" THEN DRAWING IS NOT TO FULL SCALE

PROJECT NO.
400530

11-C-101
SHEET
OF

60% SUBMITTAL - NOT FOR CONSTRUCTION

FB9000A
D400530
PLOTTED: 7/30/2019 1:05 PM FILE: C:\pw_working\bvw_americas\d0683625\400530-11-C-101-105.dwg

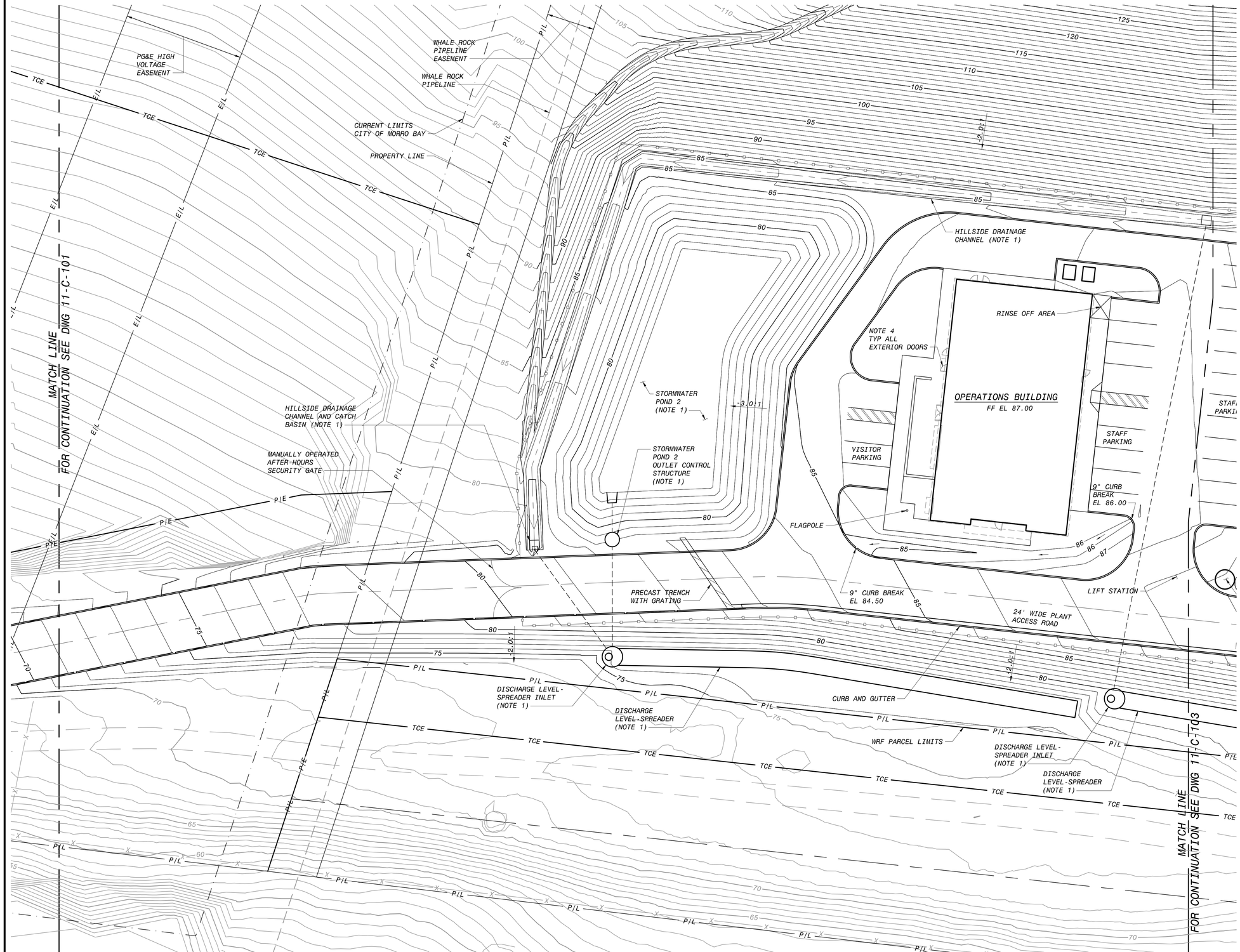

NOTES:

1. OFFSITE AND HILLSIDE DRAINAGE IS CAPTURED VIA PERIMETER SWALES AND DIVERTED AROUND THE WRF PLANT SITE. THIS IS DONE TO SEGREGATE UNDEVELOPED AREA FLOWS FROM DEVELOPED WRF AREA FLOWS TO BETTER CONTROL STORMWATER QUALITY AND FLOW. SEE SITE PREPARATION DRAWINGS (AREA 10) AND DRAINAGE REPORT FOR DETAILS ABOUT THIS SYSTEM.
2. WRF PLANT AREA STORMWATER PONDS AND OUTLET CONTROL STRUCTURES ARE TO BE CONSTRUCTED WITH EARLY (SITE PREPARATION) WORK. SEE SITE PREPARATION DRAWINGS (AREA 10) AND DRAINAGE REPORT FOR DETAILS ABOUT THIS SYSTEM.
3. SEE STRUCTURAL DRAWINGS FOR SPECIFIC LOCATION OF INDICATED BUILDING COORDINATE POINTS.
4. ADA ACCESS ZONE. SLOPE PAVING FROM 1/4" BELOW INTERIOR ELEVATION AWAY AT NO MORE THAN 2% FOR 60" OUTWARD FROM BUILDING AND 42" FROM BOTH SIDES OF DOOR.
5. VEHICLE ACCESS ZONE. SLOPE PAVING FROM 1/4" BELOW INTERIOR ELEVATION AWAY AT NO MORE THAN 5% FOR 60" OUTWARD FROM BUILDING.

NO.	BY	CHK	APP	REVISIONS AND RECORD OF USE	DATE
B	EVB	RTB	EVB	60% SUBMITTAL	7/30/2019

BLACK & VEATCH
JOINT VENTURE
FILANC
BLACK & VEATCH

CITY OF MORRO BAY
MORRO BAY WATER RECLAMATION FACILITY (WRF)

SITE - SOUTH OPERATIONS AREA
CIVIL
GRADING AND PAVING PLAN

DESIGNED: EVB
DETAILED: SMM
CHECKED:
APPROVED:
DATE:

0 1/2 1
IF THIS BAR DOES NOT MEASURE 1" THEN DRAWING IS NOT TO FULL SCALE

PROJECT NO.
400530

11-C-102
SHEET
OF

20' 10' 0 20' 40'
1"=20'

60% SUBMITTAL - NOT FOR CONSTRUCTION

F09000A
D400530
PLOTTED: 7/30/2019 1:06 PM FILE: C:\pw_working\bvw_americas\d0683625\400530-11-C-101-105.dwg

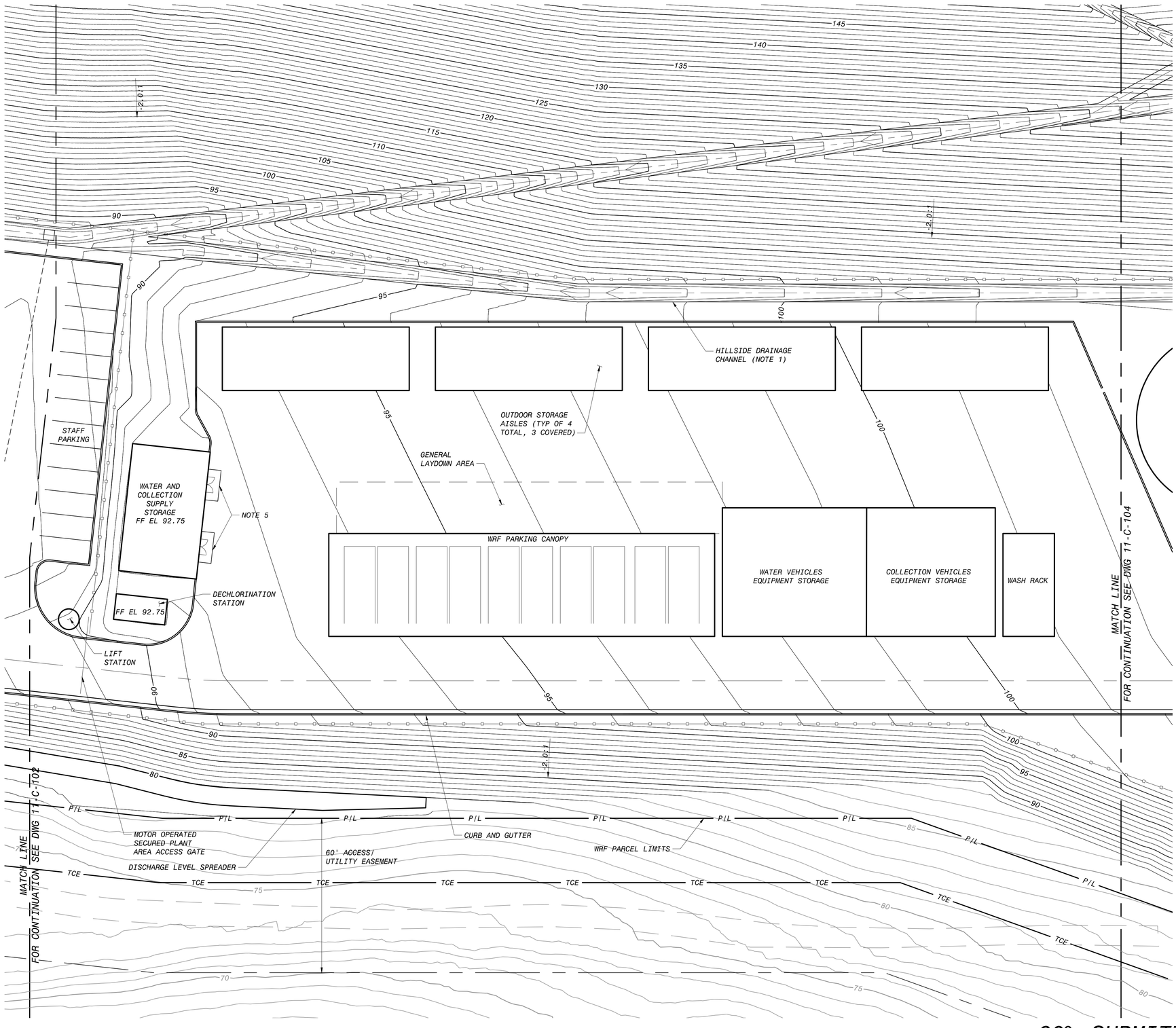

20' 10' 0 20' 40'

1"=20'

NOTES:

1. OFFSITE AND HILLSIDE DRAINAGE IS CAPTURED VIA PERIMETER SWALES AND DIVERTED AROUND THE WRF PLANT SITE. THIS IS DONE TO SEGREGATE UNDEVELOPED AREA FLOWS FROM DEVELOPED WRF AREA FLOWS TO BETTER CONTROL STORMWATER QUALITY AND FLOW. SEE SITE PREPARATION DRAWINGS (AREA 10) AND DRAINAGE REPORT FOR DETAILS ABOUT THIS SYSTEM.
2. WRF PLANT AREA STORMWATER PONDS AND OUTLET CONTROL STRUCTURES ARE TO BE CONSTRUCTED WITH EARLY (SITE PREPARATION) WORK. SEE SITE PREPARATION DRAWINGS (AREA 10) AND DRAINAGE REPORT FOR DETAILS ABOUT THIS SYSTEM.
3. SEE STRUCTURAL DRAWINGS FOR SPECIFIC LOCATION OF INDICATED BUILDING COORDINATE POINTS.
4. ADA ACCESS ZONE. SLOPE PAVING FROM 1/4" BELOW INTERIOR ELEVATION AWAY AT NO MORE THAN 2% FOR 60" OUTWARD FROM BUILDING AND 42" FROM BOTH SIDES OF DOOR.
5. VEHICLE ACCESS ZONE. SLOPE PAVING FROM 1/4" BELOW INTERIOR ELEVATION AWAY AT NO MORE THAN 5% FOR 60" OUTWARD FROM BUILDING.

NO.	BY	CHK	APP	DATE	REVISIONS AND RECORD OF USE
B	EVB	RTB	EVB	7/30/2019	60% SUBMITTAL

BLACK & VEATCH

JOINT VENTURE

BLACK & VEATCH

FILANC

CITY OF MORRO BAY
MORRO BAY WATER
RECLAMATION FACILITY (WRF)

SITE - NORTH OPERATIONS AREA
CIVIL
GRADING AND PAVING PLAN

DESIGNED: EVB
DETAILED: SMM
CHECKED:
APPROVED:
DATE:

0 1/2 1

IF THIS BAR DOES NOT MEASURE 1" THEN DRAWING IS NOT TO FULL SCALE

PROJECT NO.
400530

11-C-103
SHEET
OF

60% SUBMITTAL - NOT FOR CONSTRUCTION

FB9000A
D400530
PLOTTED: 7/30/2019 1:06 PM FILE: C:\pw_working\bvw_americas\d0683625\400530-11-C-101-105.dwg

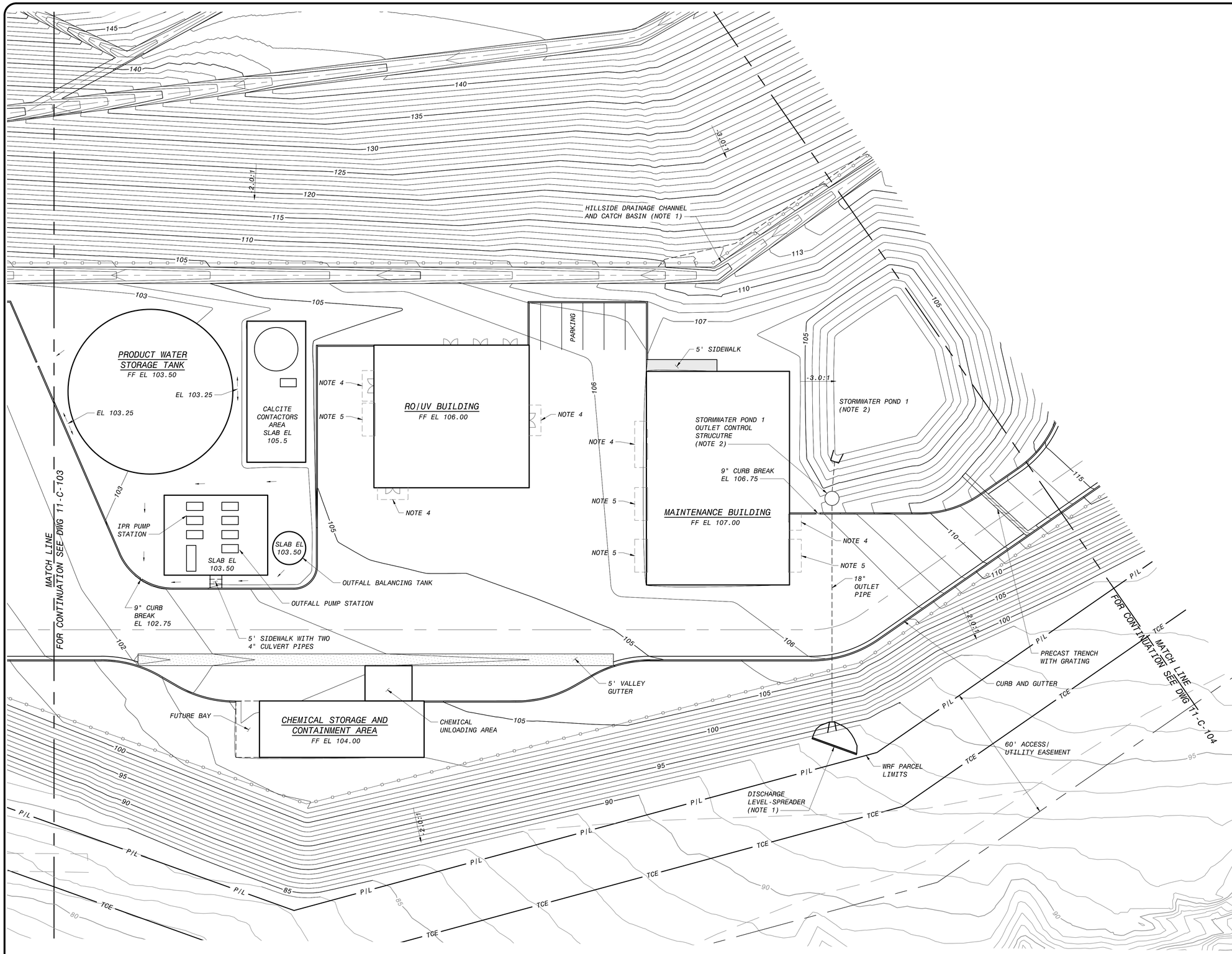

NOTES:

1. OFFSITE AND HILLSIDE DRAINAGE IS CAPTURED VIA PERIMETER SWALES AND DIVERTED AROUND THE WRF PLANT SITE. THIS IS DONE TO SEGREGATE UNDEVELOPED AREA FLOWS FROM DEVELOPED WRF AREA FLOWS TO BETTER CONTROL STORMWATER QUALITY AND FLOW. SEE SITE PREPARATION DRAWINGS (AREA 10) AND DRAINAGE REPORT FOR DETAILS ABOUT THIS SYSTEM.
2. WRF PLANT AREA STORMWATER PONDS AND OUTLET CONTROL STRUCTURES ARE TO BE CONSTRUCTED WITH EARLY (SITE PREPARATION) WORK. SEE SITE PREPARATION DRAWINGS (AREA 10) AND DRAINAGE REPORT FOR DETAILS ABOUT THIS SYSTEM.
3. SEE STRUCTURAL DRAWINGS FOR SPECIFIC LOCATION OF INDICATED BUILDING COORDINATE POINTS.
4. ADA ACCESS ZONE. SLOPE PAVING FROM 1/4" BELOW INTERIOR ELEVATION AWAY AT NO MORE THAN 2% FOR 60" OUTWARD FROM BUILDING AND 42" FROM BOTH SIDES OF DOOR.
5. VEHICLE ACCESS ZONE. SLOPE PAVING FROM 1/4" BELOW INTERIOR ELEVATION AWAY AT NO MORE THAN 5% FOR 60" OUTWARD FROM BUILDING.

20' 10' 0 20' 40'
1"=20'

60% SUBMITTAL - NOT FOR CONSTRUCTION

DATE	REVISIONS AND RECORD OF USE	NO.	BY	CHK	APP
7/30/2019	60% SUBMITTAL	B	EVB	RTB	EVB

BLACK & VEATCH
JOINT VENTURE
FILANC
BLACK & VEATCH

CITY OF MORRO BAY
MORRO BAY WATER RECLAMATION FACILITY (WRF)

SITE - SOUTH PROCESS AREA
CIVIL
GRADING AND PACING PLAN

DESIGNED: EVB
DETAILED: SMM
CHECKED:
APPROVED:
DATE:

0 1/2 1
IF THIS BAR DOES NOT MEASURE 1" THEN DRAWING IS NOT TO FULL SCALE

PROJECT NO.
400530

11-C-104
SHEET
OF

FD9000A
D400530
PLOTTED: 7/30/2019 1:06 PM FILE: C:\pw_working\bvw_americas\d0683625\400530-11-C-101-105.dwg

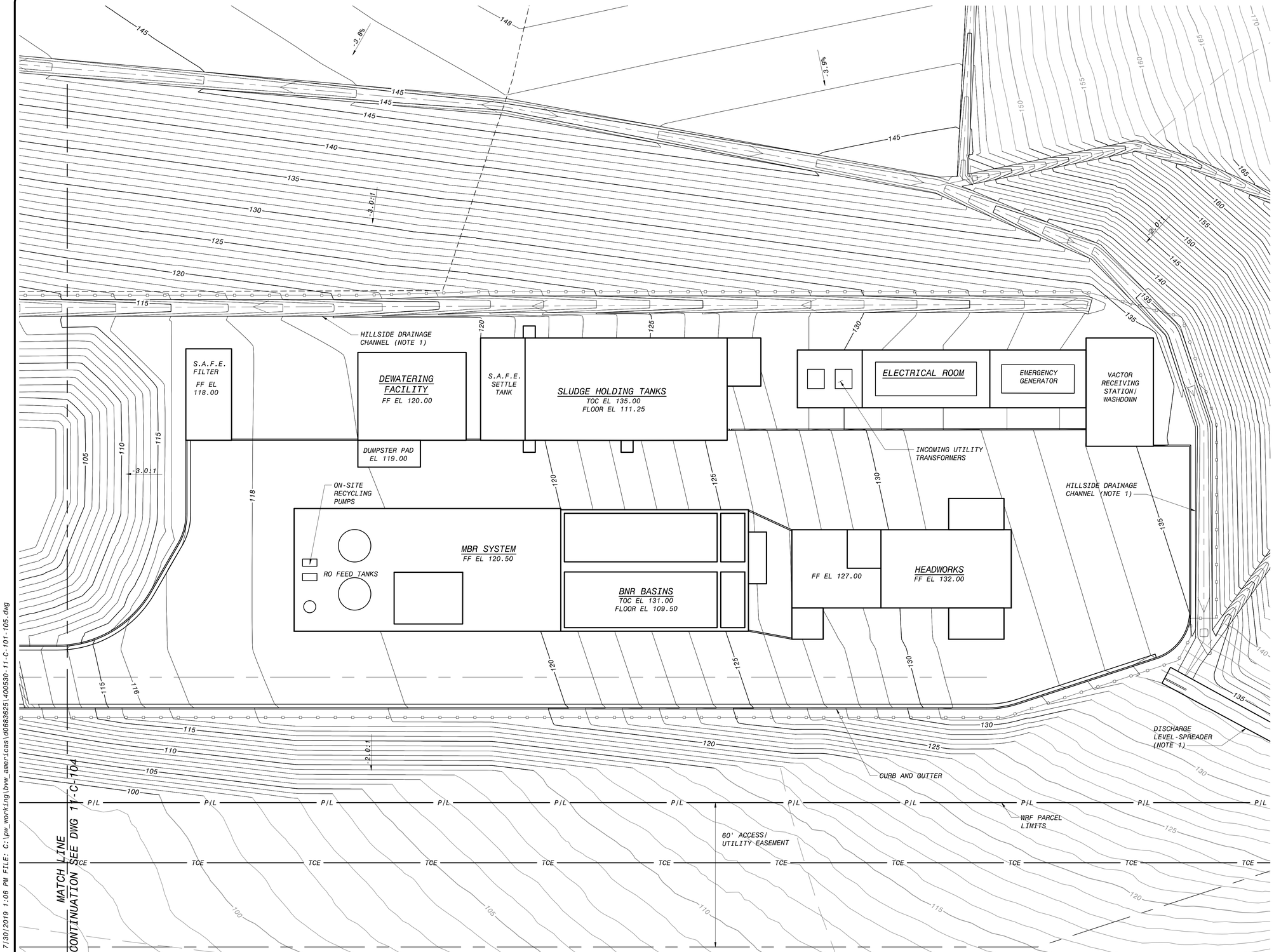

NOTES:

1. OFFSITE AND HILLSIDE DRAINAGE IS CAPTURED VIA PERIMETER SWALES AND DIVERTED AROUND THE WRF PLANT SITE. THIS IS DONE TO SEGREGATE UNDEVELOPED AREA FLOWS FROM DEVELOPED WRF AREA FLOWS TO BETTER CONTROL STORMWATER QUALITY AND FLOW. SEE SITE PREPARATION DRAWINGS (AREA 10) AND DRAINAGE REPORT FOR DETAILS ABOUT THIS SYSTEM.
2. WRF PLANT AREA STORMWATER PONDS AND OUTLET CONTROL STRUCTURES ARE TO BE CONSTRUCTED WITH EARLY (SITE PREPARATION) WORK. SEE SITE PREPARATION DRAWINGS (AREA 10) AND DRAINAGE REPORT FOR DETAILS ABOUT THIS SYSTEM.
3. SEE STRUCTURAL DRAWINGS FOR SPECIFIC LOCATION OF INDICATED BUILDING COORDINATE POINTS.
4. ADA ACCESS ZONE. SLOPE PAVING FROM 1/4" BELOW INTERIOR ELEVATION AWAY AT NO MORE THAN 2% FOR 60" OUTWARD FROM BUILDING AND 42" FROM BOTH SIDES OF DOOR.
5. VEHICLE ACCESS ZONE. SLOPE PAVING FROM 1/4" BELOW INTERIOR ELEVATION AWAY AT NO MORE THAN 5% FOR 60" OUTWARD FROM BUILDING.

20' 10' 0 20' 40'
1"=20'

60% SUBMITTAL - NOT FOR CONSTRUCTION

DATE	REVISIONS AND RECORD OF USE	NO.	BY	CHK	APP
7/30/2019	60% SUBMITTAL	B	EVB	RTB	EVB

BLACK & VEATCH
JOINT VENTURE
FILANC
BLACK & VEATCH

CITY OF MORRO BAY
MORRO BAY WATER RECLAMATION FACILITY (WRF)

SITE - NORTH PROCESS AREA
CIVIL
GRADING AND PAVING PLAN

DESIGNED: EVB
DETAILED: SMM
CHECKED:
APPROVED:
DATE:

0 1/2 1
IF THIS BAR DOES NOT MEASURE 1" THEN DRAWING IS NOT TO FULL SCALE

PROJECT NO.
400530

11-C-105
SHEET
OF

FD9000A
D400530
PLOTTED: 7/30/2019 1:06 PM FILE: C:\pw_working\bvw_americas\d0683625\400530-11-C-101-105.dwg

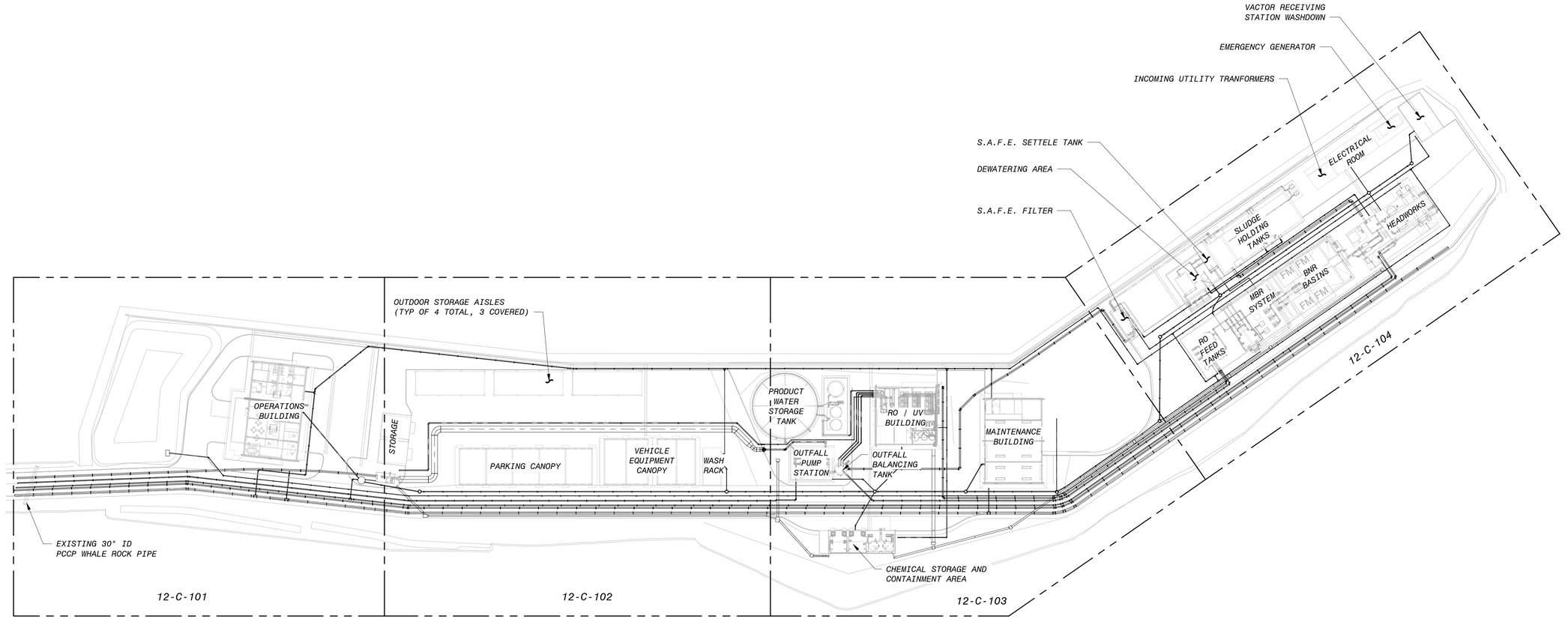

OVERALL PIPING KEY PLAN

1" = 60'-0"

60' 30' 0 60' 120'

1" = 60'

60% SUBMITTAL - NOT FOR CONSTRUCTION

NO.	BY	CHK	APP	DATE	REVISIONS AND RECORD OF USE
B	AGS	RWF	EVB	7/30/2019	60% SUBMITTAL
A	EVB	RWF	EVB	3/5/2019	30% SUBMITTAL

BLACK & VEATCH

JOINT VENTURE

FILANC

BLACK & VEATCH

CITY OF MORRO BAY
MORRO BAY WRF
RECLAMATION FACILITY (WRF)

SITE - OVERALL
CIVIL
PIPING KEY PLAN

DESIGNED: AGS
DETAILED: SDM
CHECKED:
APPROVED:
DATE:

0 1/2 1

IF THIS BAR DOES NOT MEASURE 1" THEN DRAWING IS NOT TO FULL SCALE

PROJECT NO.
400530

12-C-001
SHEET
OF

PLOTTED: 30-Jul-19 4:25:04 PM
D400530

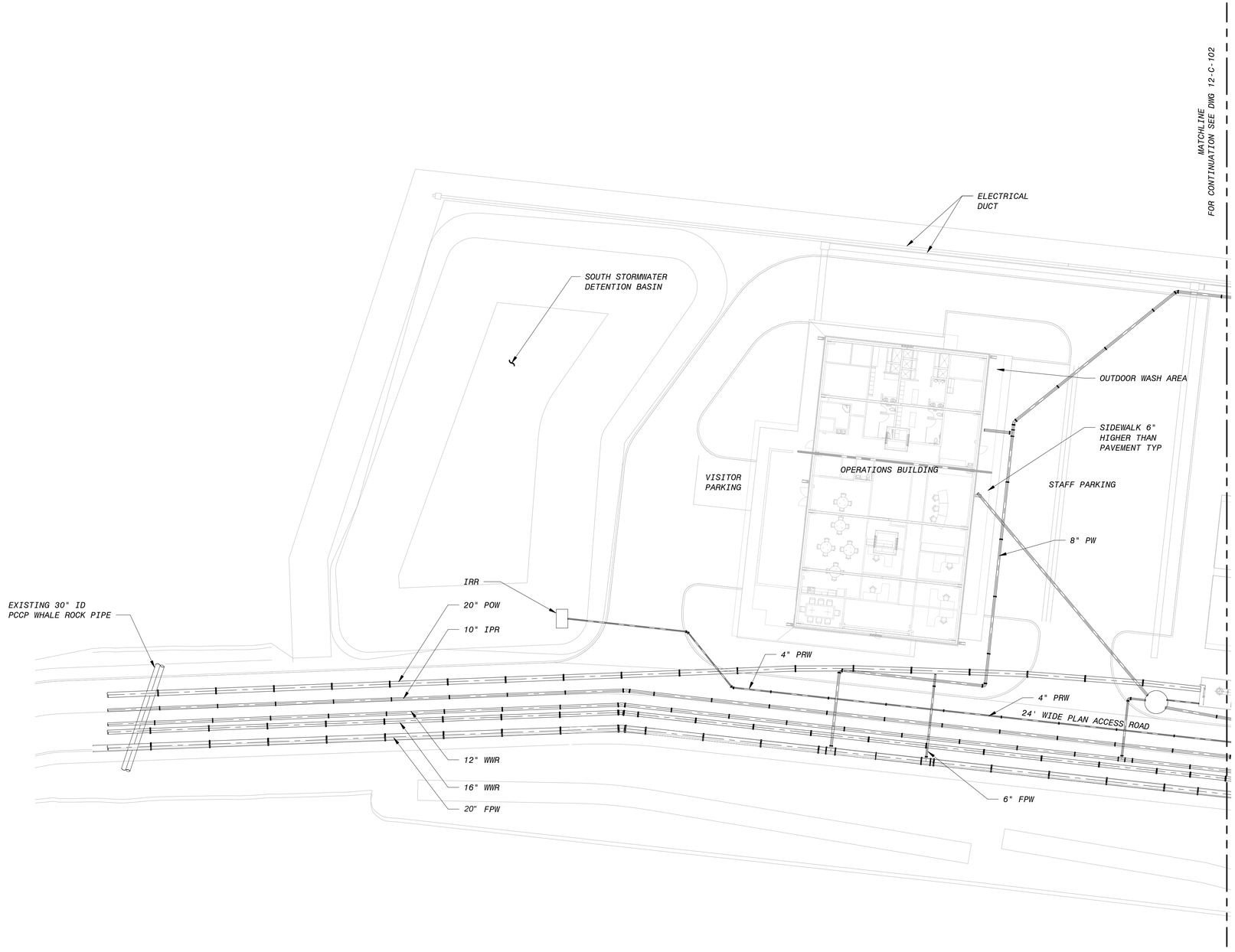

SOUTH OPERATIONS AREA PIPING PLAN

1" = 20'-0"

20' 10' 0 20' 40'

1" = 20'

60% SUBMITTAL - NOT FOR CONSTRUCTION

NO.	BY	CHK	APP	DATE	REVISIONS AND RECORD OF USE
B	AGS	RWF	EVB	7/30/2019	60% SUBMITTAL
A	EVB	RWF	EVB	3/5/2019	30% SUBMITTAL

BLACK & VEATCH

JOINT VENTURE

FILANC

BLACK & VEATCH

CITY OF MORRO BAY
MORRO BAY WRF
RECLAMATION FACILITY (WRF)

SITE - SOUTH OPERATIONS AREA
CIVIL
PIPING PLAN

DESIGNED: AGS
DETAILED: SDM
CHECKED:
APPROVED:
DATE:

0 1/2 1
IF THIS BAR DOES NOT MEASURE 1" THEN DRAWING IS NOT TO FULL SCALE

PROJECT NO.
400530

12-C-101
SHEET
OF

PLOTTED: 30-Jul-19 4:27:36 PM
D400530

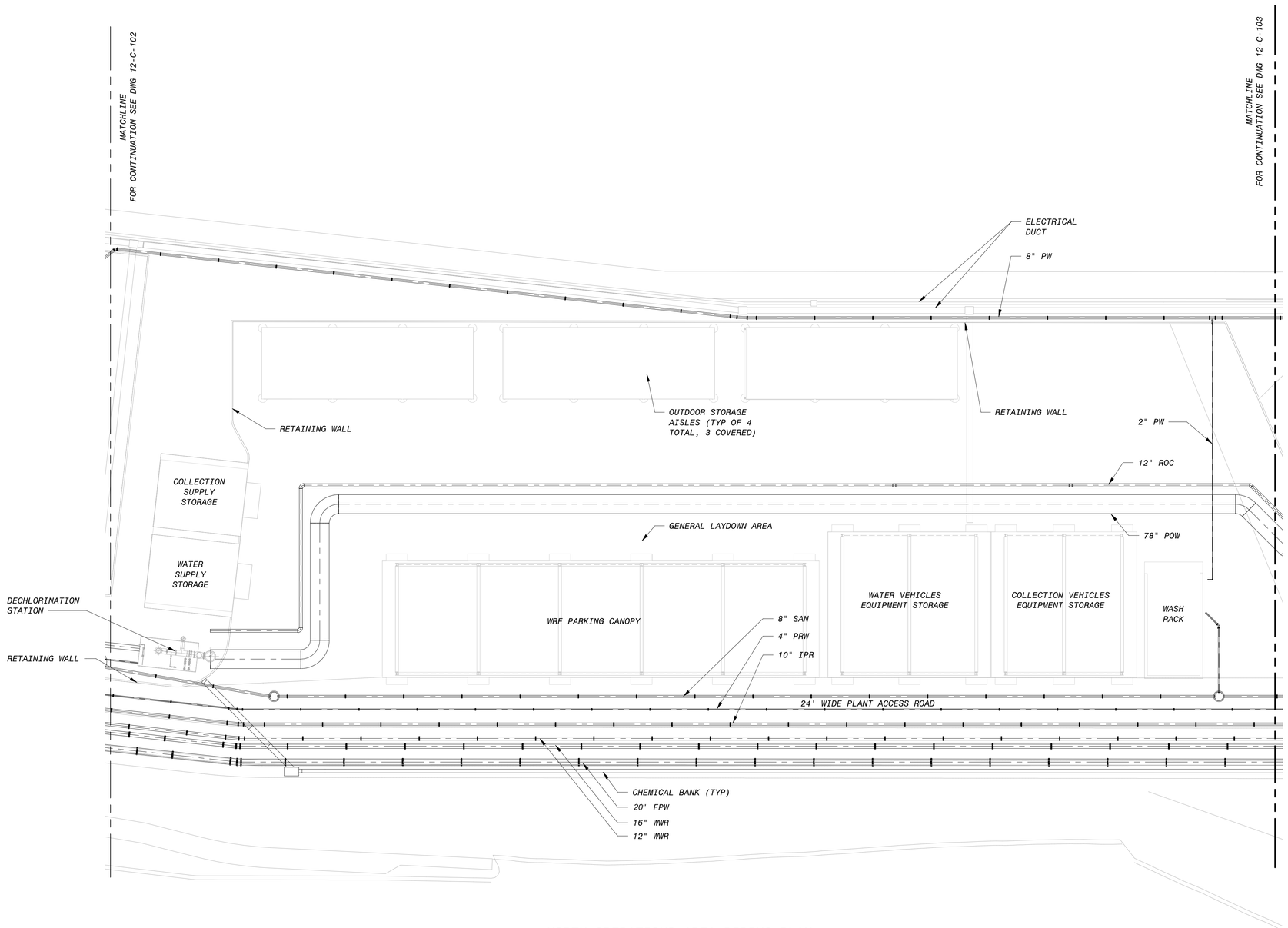

NORTH OPERATIONS AREA PIPING PLAN

1" = 20'-0"

20' 10' 0 20' 40'

1" = 20'

60% SUBMITTAL - NOT FOR CONSTRUCTION

NO.	BY	CHK	APP	DATE	REVISIONS AND RECORD OF USE
B	AGS	RWF	EVB	7/30/2019	60% SUBMITTAL
A	EVB	RWF	EVB	3/5/2019	30% SUBMITTAL

BLACK & VEATCH
JOINT VENTURE
FILANC
BLACK & VEATCH

CITY OF MORRO BAY
MORRO BAY WRF
RECLAMATION FACILITY (WRF)

SITE - NORTH OPERATIONS AREA
CIVIL
PIPING PLAN

DESIGNED: AGS
DETAILED: SDM
CHECKED:
APPROVED:
DATE:

0 1/2 1
IF THIS BAR DOES NOT MEASURE 1" THEN DRAWING IS NOT TO FULL SCALE

PROJECT NO.
400530

12-C-102
SHEET
OF

PLOTTED: 30-Jul-19 4:28:34 PM
D400530

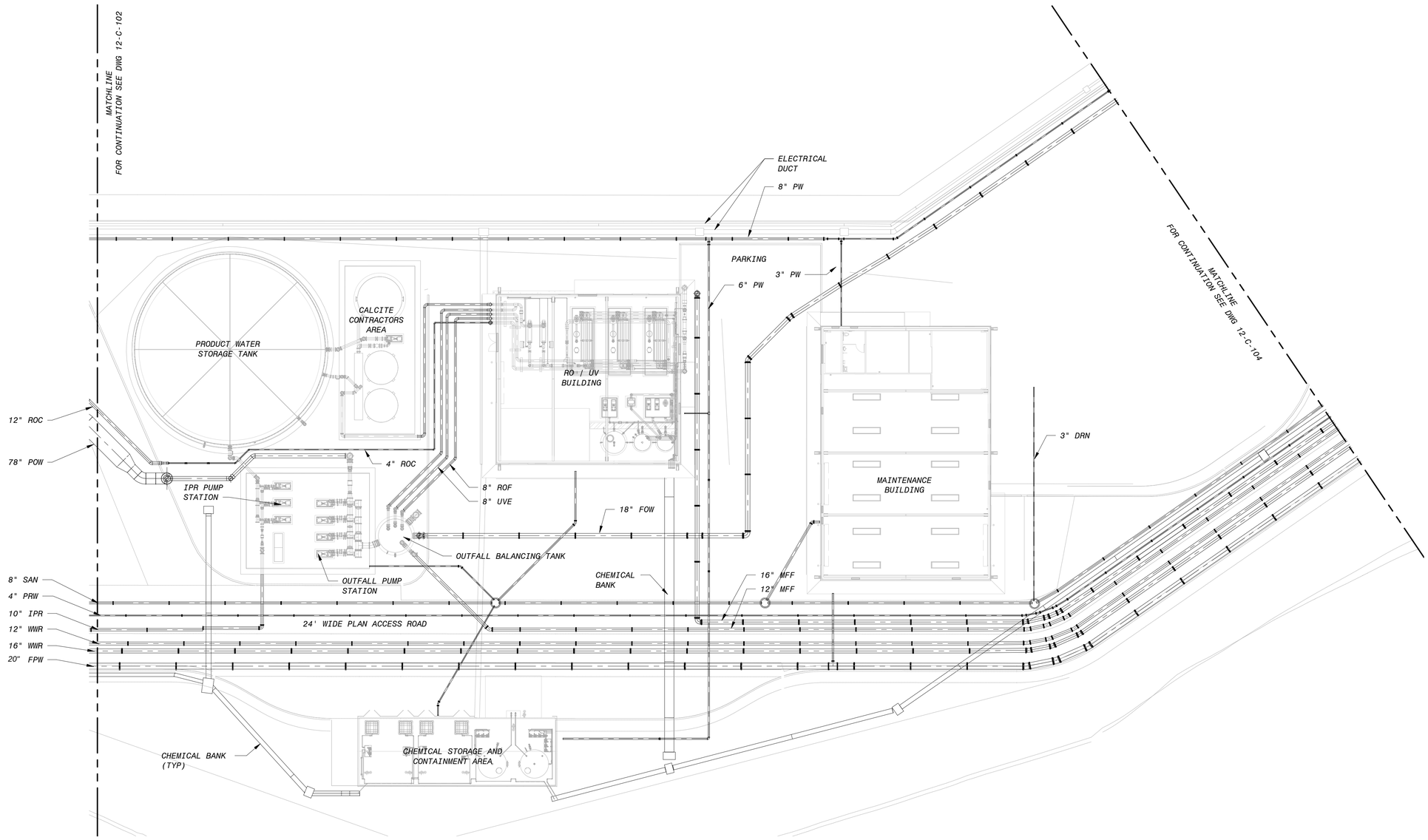

SOUTH PROCESS AREA PIPING PLAN

1" = 20'-0"

20' 10' 0 20' 40'

1" = 20'

60% SUBMITTAL - NOT FOR CONSTRUCTION

NO.	BY	CHK	APP	DATE	REVISIONS AND RECORD OF USE
B	AGS	RWF	EVB	7/30/2019	60% SUBMITTAL
A	EVB	RWF	EVB	3/5/2019	30% SUBMITTAL

BLACK & VEATCH

JOINT VENTURE

FILANC

BLACK & VEATCH

CITY OF MORRO BAY
MORRO BAY WRF
RECLAMATION FACILITY (WRF)

SITE - SOUTH PROCESS AREA
CIVIL
PIPING PLAN

DESIGNED: AGS
DETAILED: SDM
CHECKED:
APPROVED:
DATE:

0 1/2 1
IF THIS BAR DOES NOT MEASURE 1" THEN DRAWING IS NOT TO FULL SCALE

PROJECT NO.
400530

12-C-103
SHEET
OF

PLOTTED: 30-Jul-19 4:29:31 PM
D400530

MATCHLINE
FOR CONTINUATION SEE DWG 12-C-103

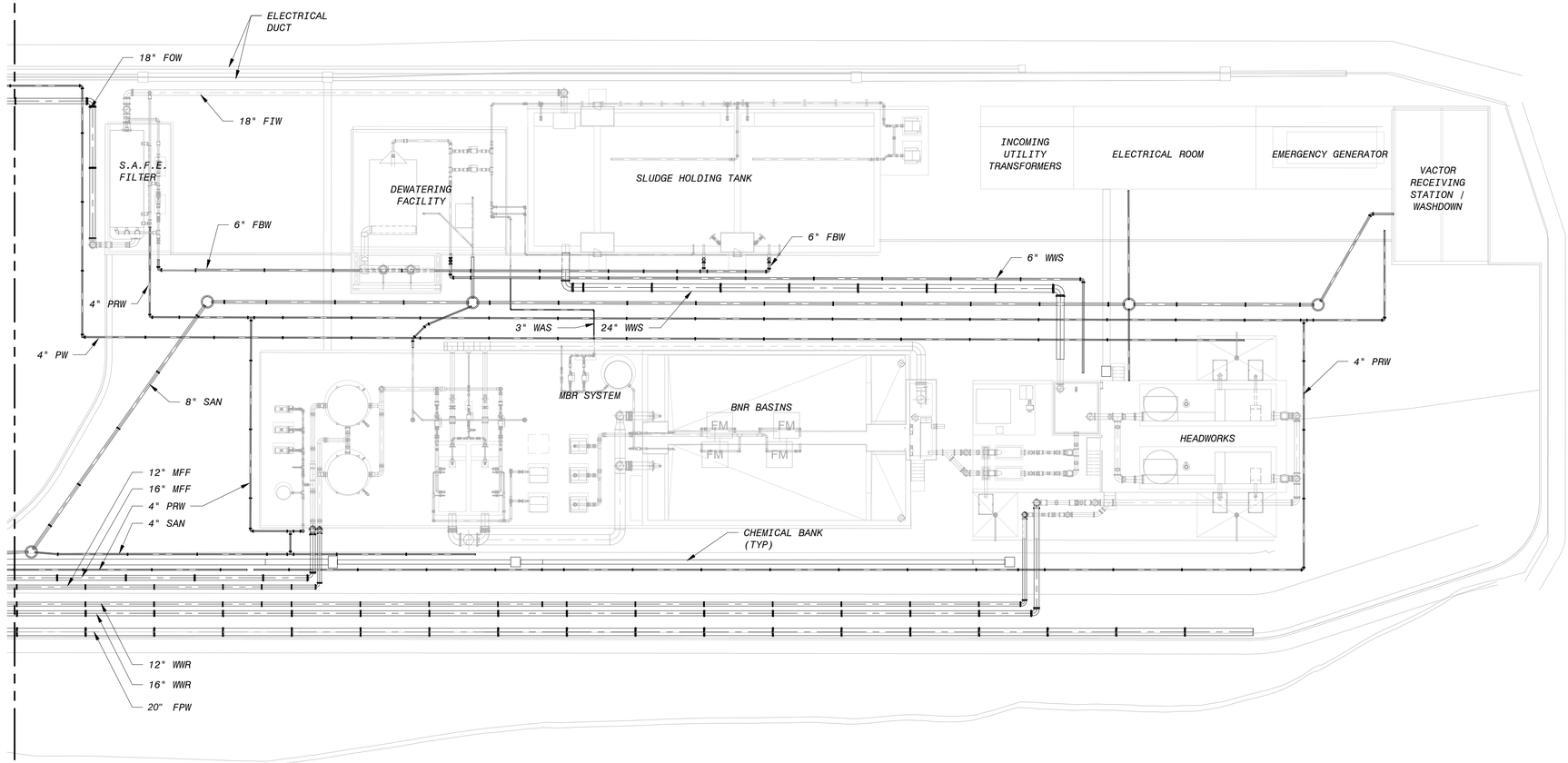

NORTH PROCESS AREA PIPING PLAN
1" = 20'-0"

20' 10' 0 20' 40'
1" = 20'

60% SUBMITTAL - NOT FOR CONSTRUCTION

NO.	BY	CHK	APP	DATE	REVISIONS AND RECORD OF USE
B	AGS	RWF	EVB	7/30/2019	60% SUBMITTAL
A	EVB	RWF	EVB	3/5/2019	30% SUBMITTAL

BLACK & VEATCH
JOINT VENTURE
FILANC
BLACK & VEATCH

CITY OF MORRO BAY
MORRO BAY WRF
RECLAMATION FACILITY (WRF)

SITE - NORTH PROCESS AREA
CIVIL
PIPING PLAN

DESIGNED: AGS
DETAILED: SDM
CHECKED:
APPROVED:
DATE:

0 1/2 1
IF THIS BAR DOES NOT MEASURE 1" THEN DRAWING IS NOT TO FULL SCALE

PROJECT NO.
400530

12-C-104
SHEET
OF

PLOTTED: 30-Jul-19 4:30:13 PM
D400530

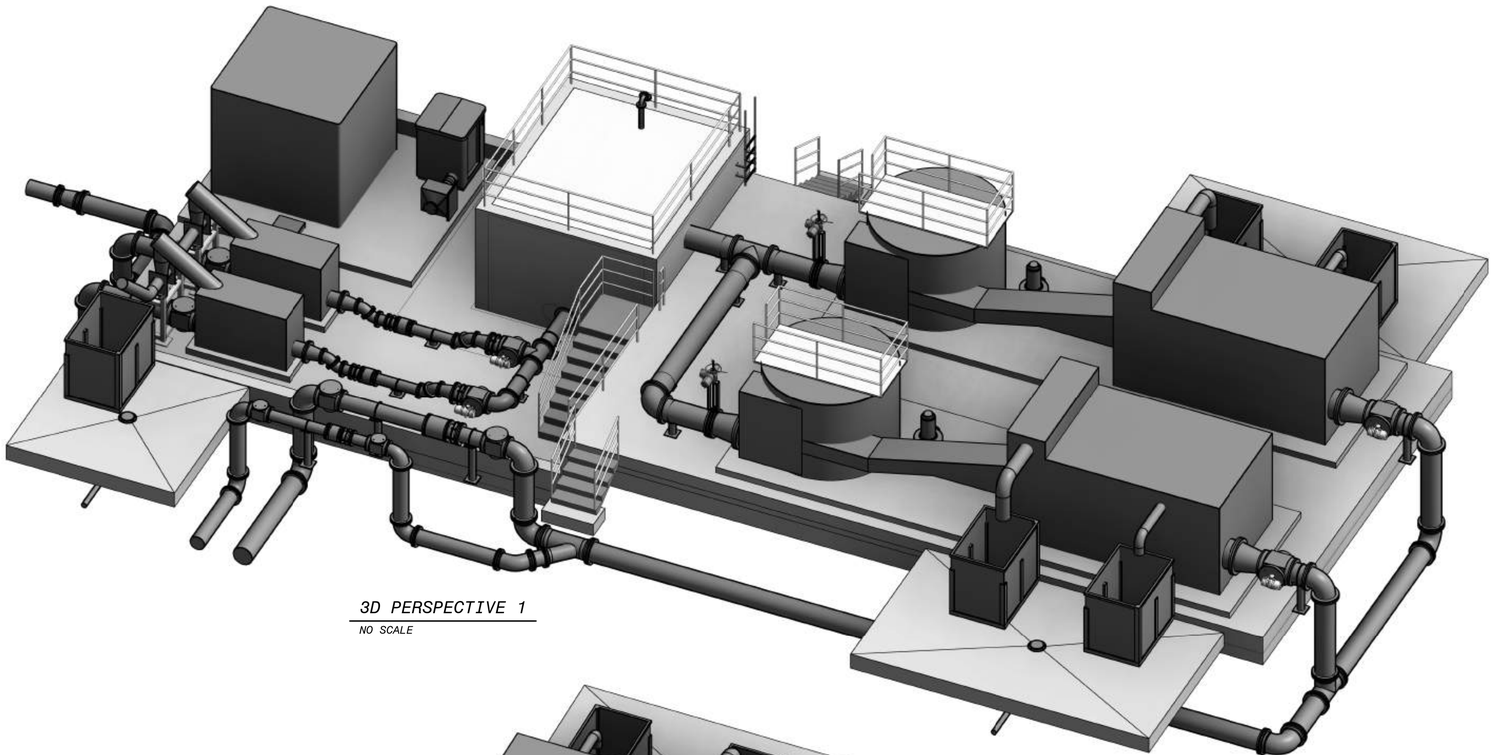

3D PERSPECTIVE 1

NO SCALE

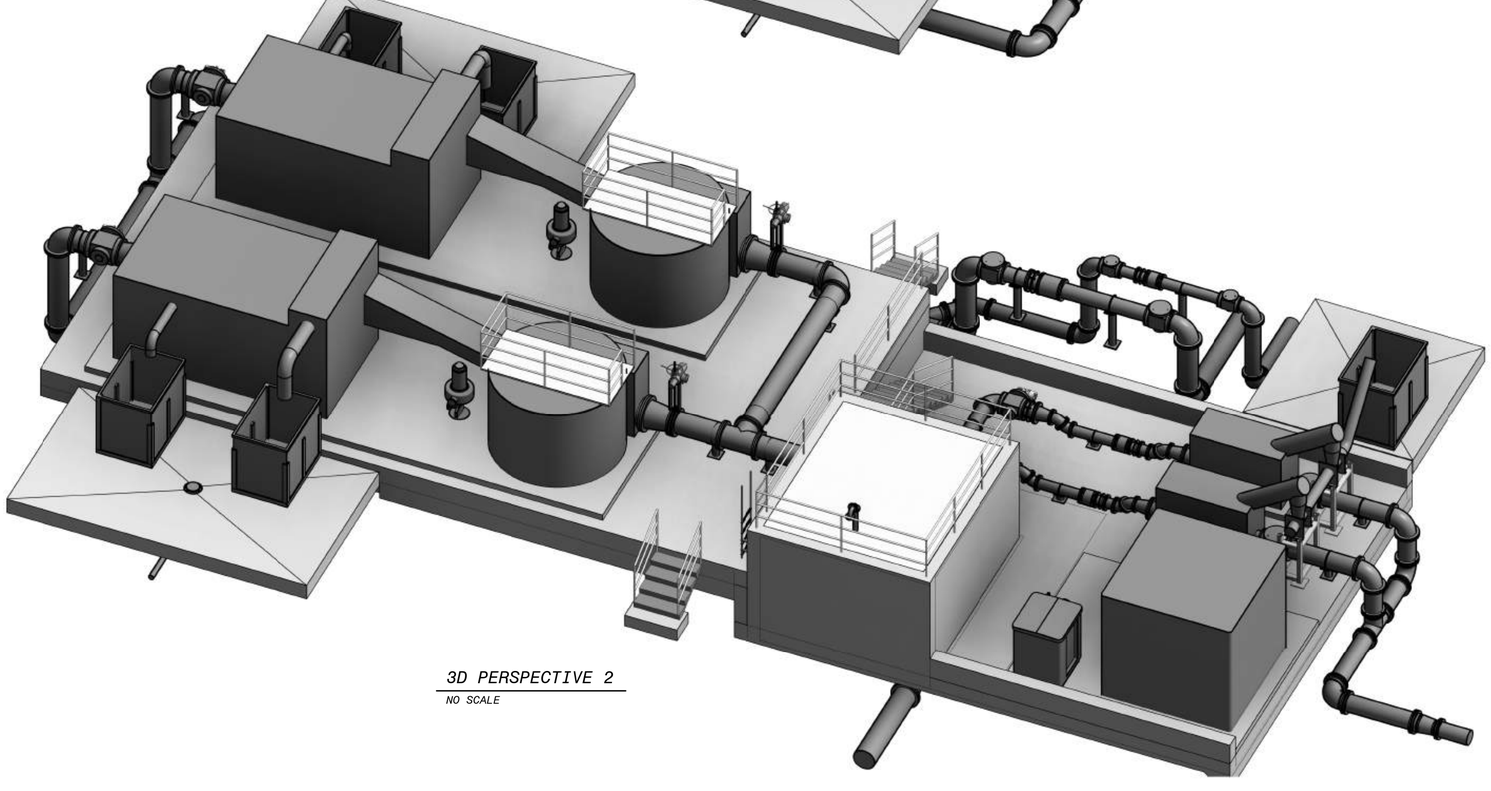

3D PERSPECTIVE 2

NO SCALE

60% SUBMITTAL- NOT FOR CONSTRUCTION

NO.	BY	CHK	APP	DATE	REVISIONS AND RECORD OF USE
B	TDE	RT	EVB	7/30/2019	60% SUBMITTAL
A	TDE	RWF	EVB	3/5/2019	30% SUBMITTAL

BLACK & VEATCH

JOINT VENTURE

FILANC

BLACK & VEATCH

CITY OF MORRO BAY
MORRO BAY WATER
RECLAMATION FACILITY (WRF)

HEADWORKS AREA - OVERALL
CIVIL-MECHANICAL
3D VIEWS

DESIGNED: TDE
DETAILED: MAK
CHECKED:
APPROVED:
DATE:

0 1/2 1

IF THIS BAR DOES NOT MEASURE 1" THEN DRAWING IS NOT TO FULL SCALE

PROJECT NO.
400530

20-M-001

SHEET
OF

PLOTTED: 7/30/2019 10:40:16 AM
D400530

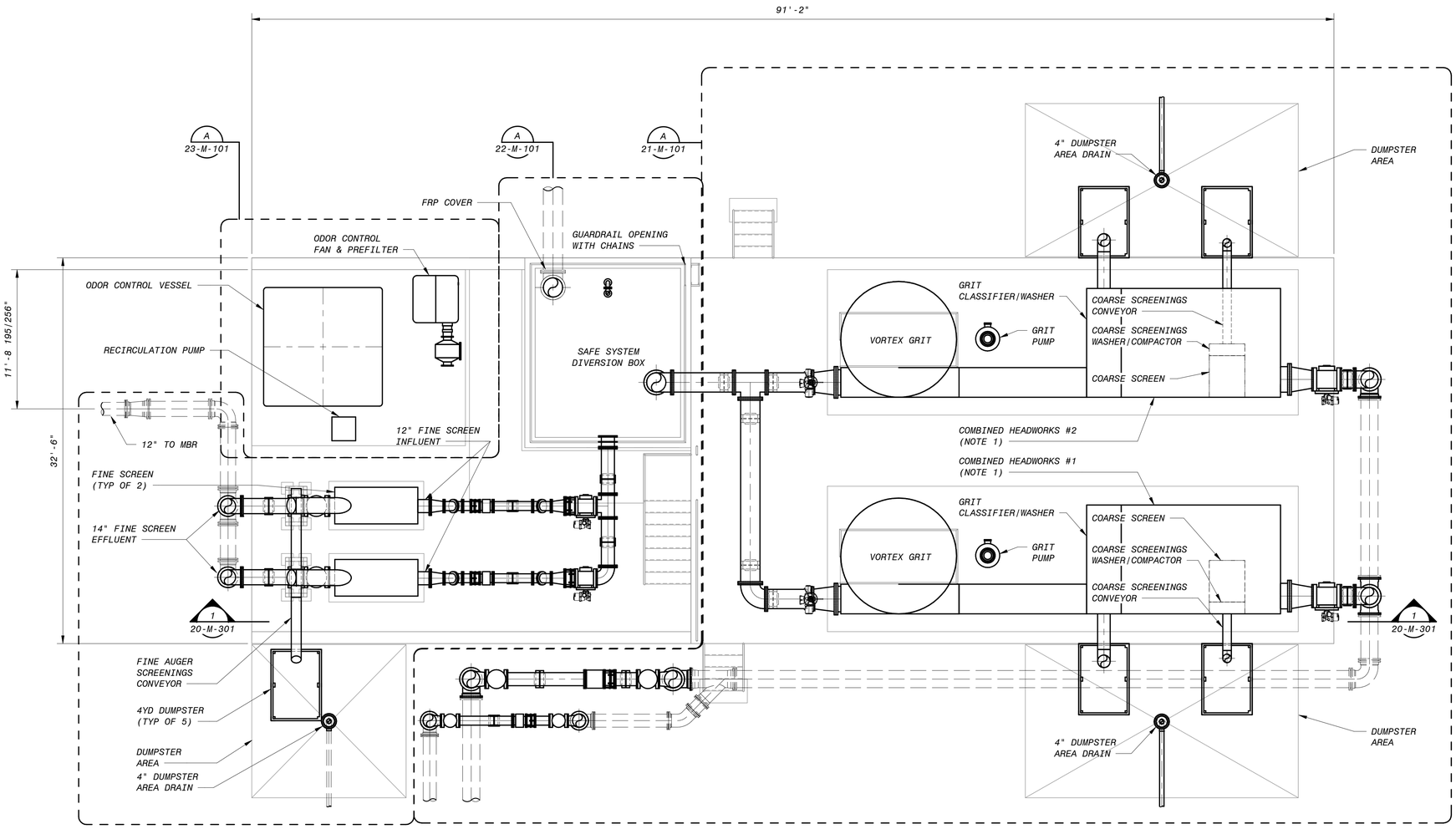

HEADWORKS AREA - OVERALL - OPERATING LEVEL PLAN

3/16" = 1'-0"

NOTES:

1. *PACKAGE HEADWORKS LAYOUT IS VENDOR SPECIFIC. THIS LAYOUT WILL BY ADJUSTED WHEN HEADWORKS PACKAGE IS PROCURED.*

NO.	BY	CHK	APP	DATE	REVISIONS AND RECORD OF USE
B	TDE	RT	EVB	7/30/2019	60% SUBMITTAL
A	TDE	RWF	EVB	3/5/2019	30% SUBMITTAL

BLACK & VEATCH

JOINT VENTURE

FILANC

BLACK & VEATCH

CITY OF MORRO BAY
MORRO BAY WATER
RECLAMATION FACILITY (WRF)

HEADWORKS AREA - OVERALL
CIVIL-MECHANICAL
OPERATING LEVEL PLAN

DESIGNED: TDE
DETAILED: MAK
CHECKED:
APPROVED:
DATE:

0 1/2 1

IF THIS BAR DOES NOT MEASURE 1" THEN DRAWING IS NOT TO FULL SCALE

PROJECT NO.
400530

20-M-101
SHEET
OF

6" 4' 2' 0' 5' 10'

3/16" = 1'-0"

60% SUBMITTAL - NOT FOR CONSTRUCTION

PLOTTED: 7/30/2019 10:40:19 AM
D400530

NOTES:

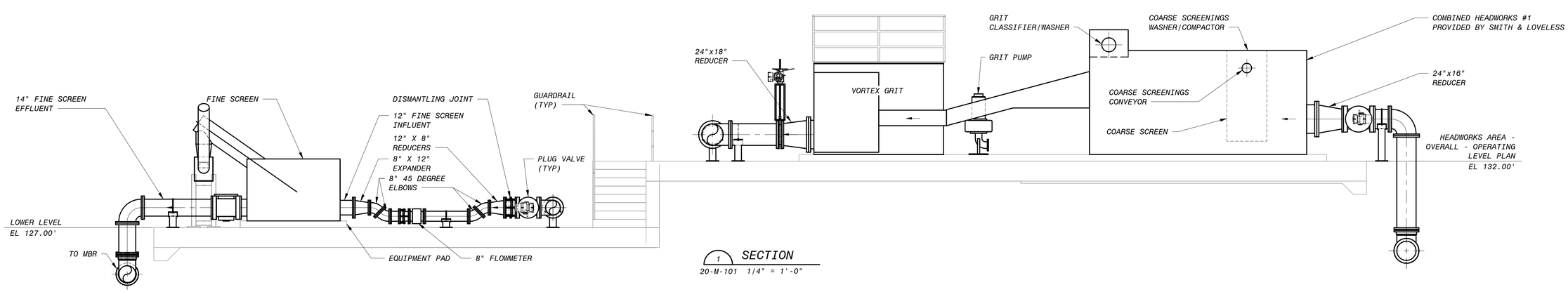

1 SECTION
20-M-101 1/4" = 1'-0"

4' 2' 0' 4' 8'
1/4" = 1'-0"

60% SUBMITTAL- NOT FOR CONSTRUCTION

NO.	BY	CHK	APP	DATE	REVISIONS AND RECORD OF USE
B	TDE	RT	EVB	7/30/2019	60% SUBMITTAL
A	TDE	RWF	EVB	3/5/2019	30% SUBMITTAL

BLACK & VEATCH JOINT VENTURE
FILANC BLACK & VEATCH

CITY OF MORRO BAY
MORRO BAY WATER RECLAMATION FACILITY (WRF)

HEADWORKS AREA - OVERALL CIVIL-MECHANICAL SECTIONS

DESIGNED: TDE
DETAILED: MAK
CHECKED:
APPROVED:
DATE:

0 1/2 1
IF THIS BAR DOES NOT MEASURE 1" THEN DRAWING IS NOT TO FULL SCALE

PROJECT NO. 400530

20-M-301
SHEET OF

PLOTTED: 7/30/2019 10:40:21 AM
D400530

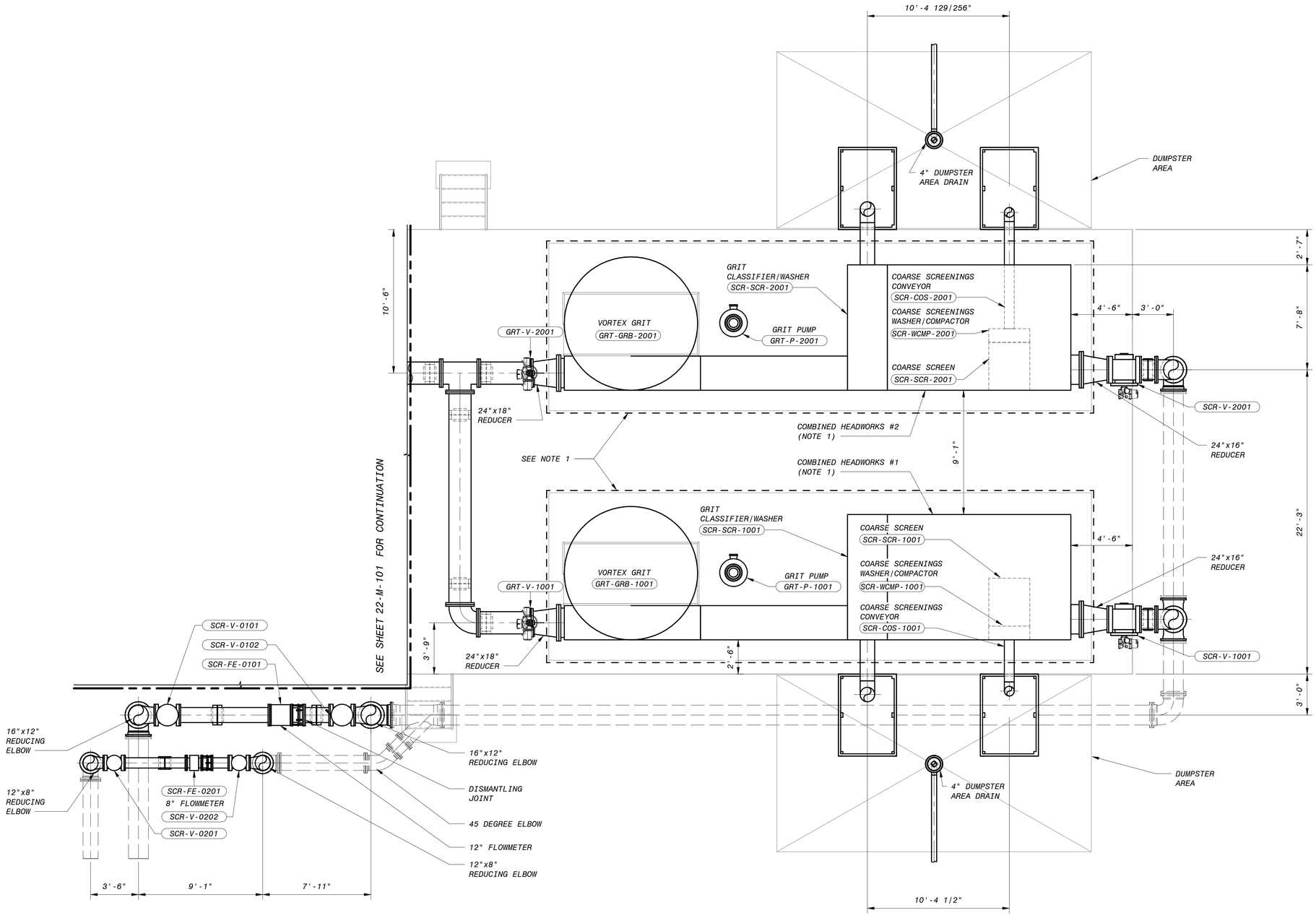

HEADWORKS AREA - HEADWORKS - PLAN

1/4" = 1'-0"

NOTES:

1. THE BOUNDARY SHOWN FOR PACKAGED HEADWORKS SYSTEMS REPRESENTS THE AVAILABLE SPACE FOR THE PACKAGED HEADWORKS SYSTEMS SUPPLIER TO PROVIDE THEIR SYSTEMS THAT MEET THE SPECIFICATION REQUIREMENTS. THE SYSTEM SHOWN ON THE DRAWINGS WILL BE ADJUSTED TO MATCH THE SELECTED PACKAGED HEADWORKS SYSTEM SUPPLIER'S PROPOSED DESIGN.

NO.	BY	CHK	APP
A	TDE	RT	EVB

60% SUBMITTAL — REVISIONS AND RECORD OF USE

7/30/2019 — DATE

BLACK & VEATCH

JOINT VENTURE

FILANC

BLACK & VEATCH

CITY OF MORRO BAY
MORRO BAY WATER
RECLAMATION FACILITY (WRF)

HEADWORKS AREA - HEADWORKS
CIVIL - MECHANICAL
PLAN

DESIGNED: TDE
DETAILED: RMB
CHECKED:
APPROVED:
DATE:

0 1/2 1
IF THIS BAR DOES NOT MEASURE 1" THEN DRAWING IS NOT TO FULL SCALE

PROJECT NO.
400530

21-M-101
SHEET
OF

4' 2' 0' 4' 8'
1/4" = 1'-0"

60% SUBMITTAL - NOT FOR CONSTRUCTION

PLOTTED: 7/30/2019 10:40:24 AM
D400530

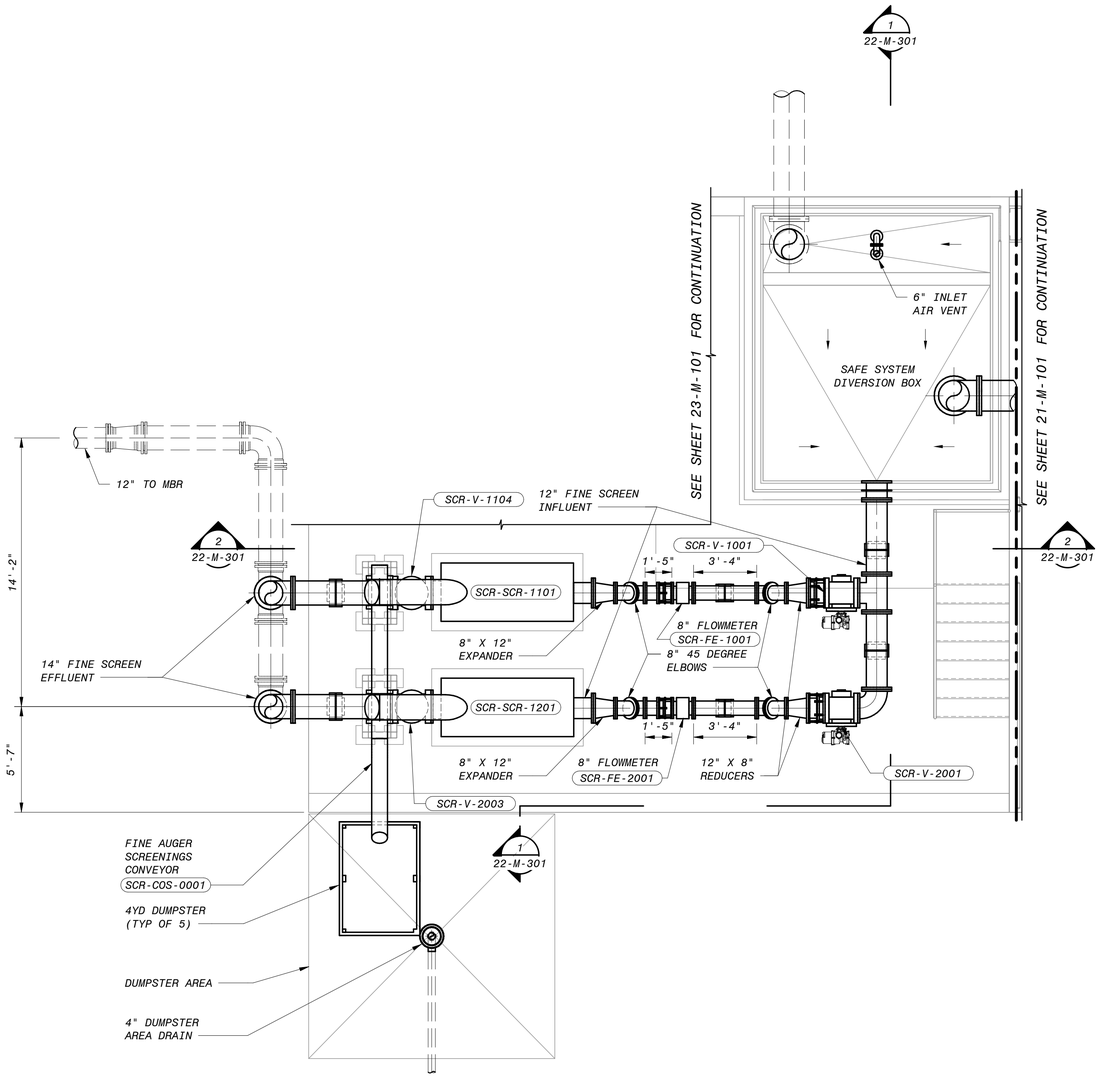

HEADWORKS AREA - FINE SCREENS - PLAN

1/4" = 1'-0"

4' 2' 0' 4' 8'

1/4" = 1'-0"

60% SUBMITTAL- NOT FOR CONSTRUCTION

NO.	BY	CHK	APP	DATE	REVISIONS AND RECORD OF USE
A	TDE	RT	EVB	7/30/2019	60% SUBMITTAL

BLACK & VEATCH

JOINT VENTURE

FILANC

BLACK & VEATCH

CITY OF MORRO BAY
MORRO BAY WATER
RECLAMATION FACILITY (WRF)

HEADWORKS AREA - FINE SCREENS
CIVIL-MECHANICAL
PLAN

DESIGNED: TDE
DETAILED: RMB
CHECKED:
APPROVED:
DATE:

0 1/2 1
IF THIS BAR DOES NOT MEASURE 1" THEN DRAWING IS NOT TO FULL SCALE

PROJECT NO.
400530

22-M-101
SHEET
OF

PLOTTED: 7/30/2019 10:40:25 AM
D400530

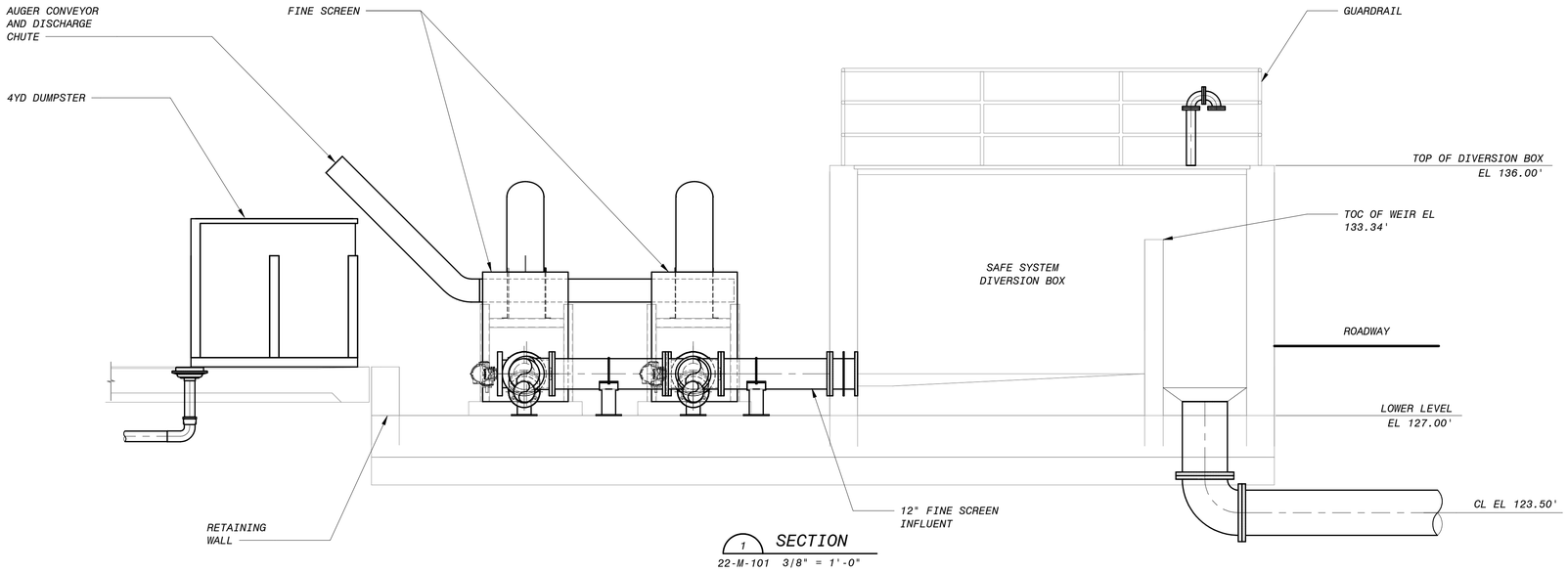

1 SECTION
22-M-101 3/8" = 1'-0"

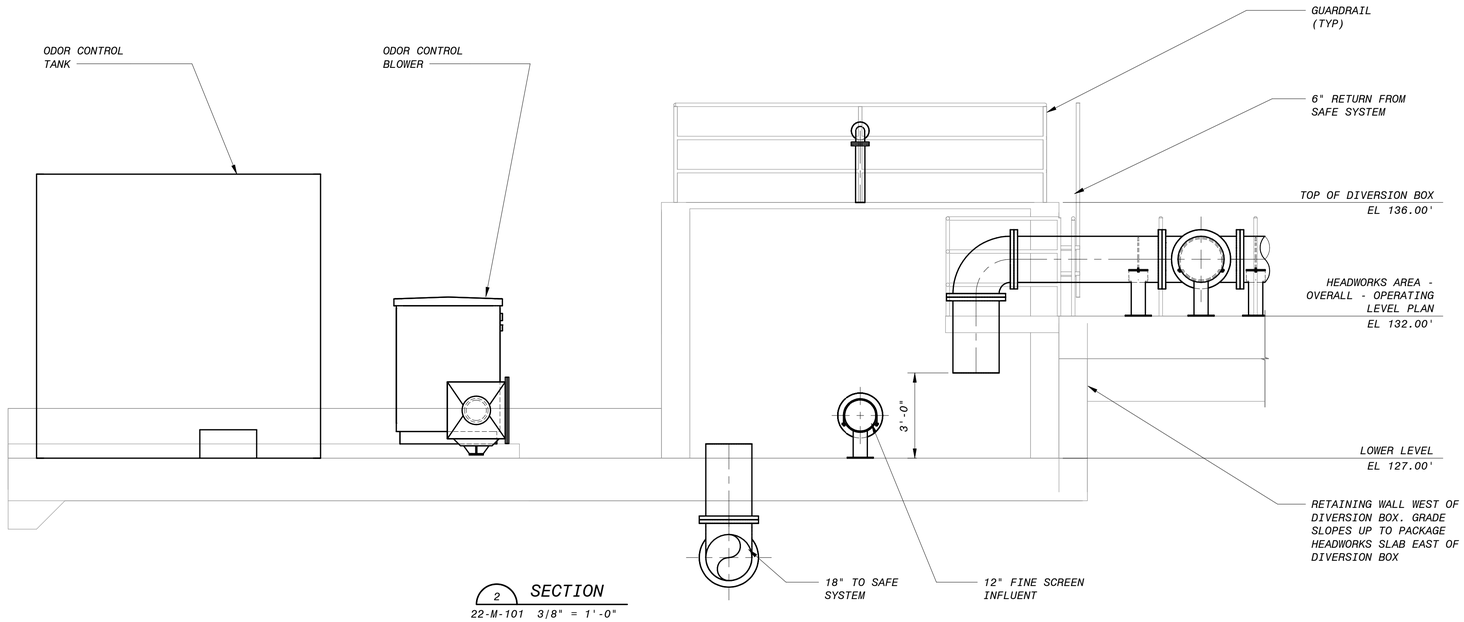

2 SECTION
22-M-101 3/8" = 1'-0"

12" 0' 1' 2' 3' 4' 5' 6' 7'
3/8" = 1'-0"

60% SUBMITTAL- NOT FOR CONSTRUCTION

NO.	BY	CHK	APP
A	TDE	RT	EVB

60% SUBMITTAL
REVISIONS AND RECORD OF USE
7/30/2019
DATE

BLACK & VEATCH
JOINT VENTURE
FILANC
BLACK & VEATCH

CITY OF MORRO BAY
MORRO BAY WATER
RECLAMATION FACILITY (WRF)

HEADWORKS AREA - FINE SCREENS
CIVIL-MECHANICAL
SECTIONS AND DETAILS 1

DESIGNED: TDE
DETAILED: RMB
CHECKED:
APPROVED:
DATE:

0 1/2 1
IF THIS BAR DOES NOT MEASURE 1" THEN DRAWING IS NOT TO FULL SCALE

PROJECT NO.
400530

22-M-301
SHEET
OF

PLOTTED: 7/30/2019 10:40:27 AM
D400530

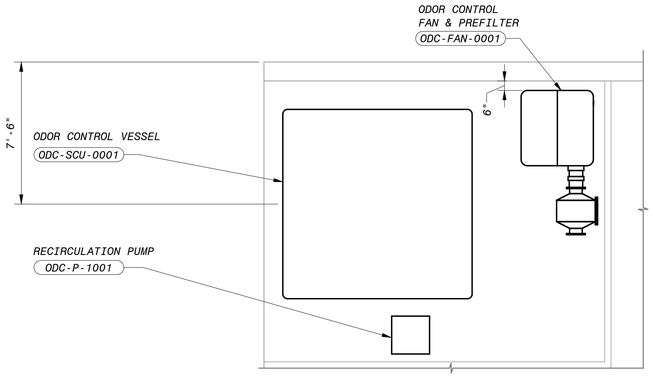

HEADWORKS AREA - ODOR CONTROL - PLAN

1/4" = 1'-0"

4' 2' 0' 4' 8'

1/4" = 1'-0"

60% SUBMITTAL- NOT FOR CONSTRUCTION

NO.	BY	CHK	APP'D
A	TDE	RT	EVB

60% SUBMITTAL

REVISIONS AND RECORD OF USE

7/30/2019

DATE

BLACK & VEATCH

JOINT VENTURE

FILANC

BLACK & VEATCH

CITY OF MORRO BAY
MORRO BAY WATER
RECLAMATION FACILITY (WRF)

HEADWORKS AREA - ODOR CONTROL
CIVIL-MECHANICAL
PLAN, SECTIONS AND DETAILS

DESIGNED: TDE
DETAILED: RMB
CHECKED:
APPROVED:
DATE:

0 1/2 1

IF THIS BAR DOES NOT MEASURE 1" THEN DRAWING IS NOT TO FULL SCALE

PROJECT NO.
400530

23-M-101

SHEET
OF

PLOTTED: 7/30/2019 10:40:27 AM

D400530

NOTES:

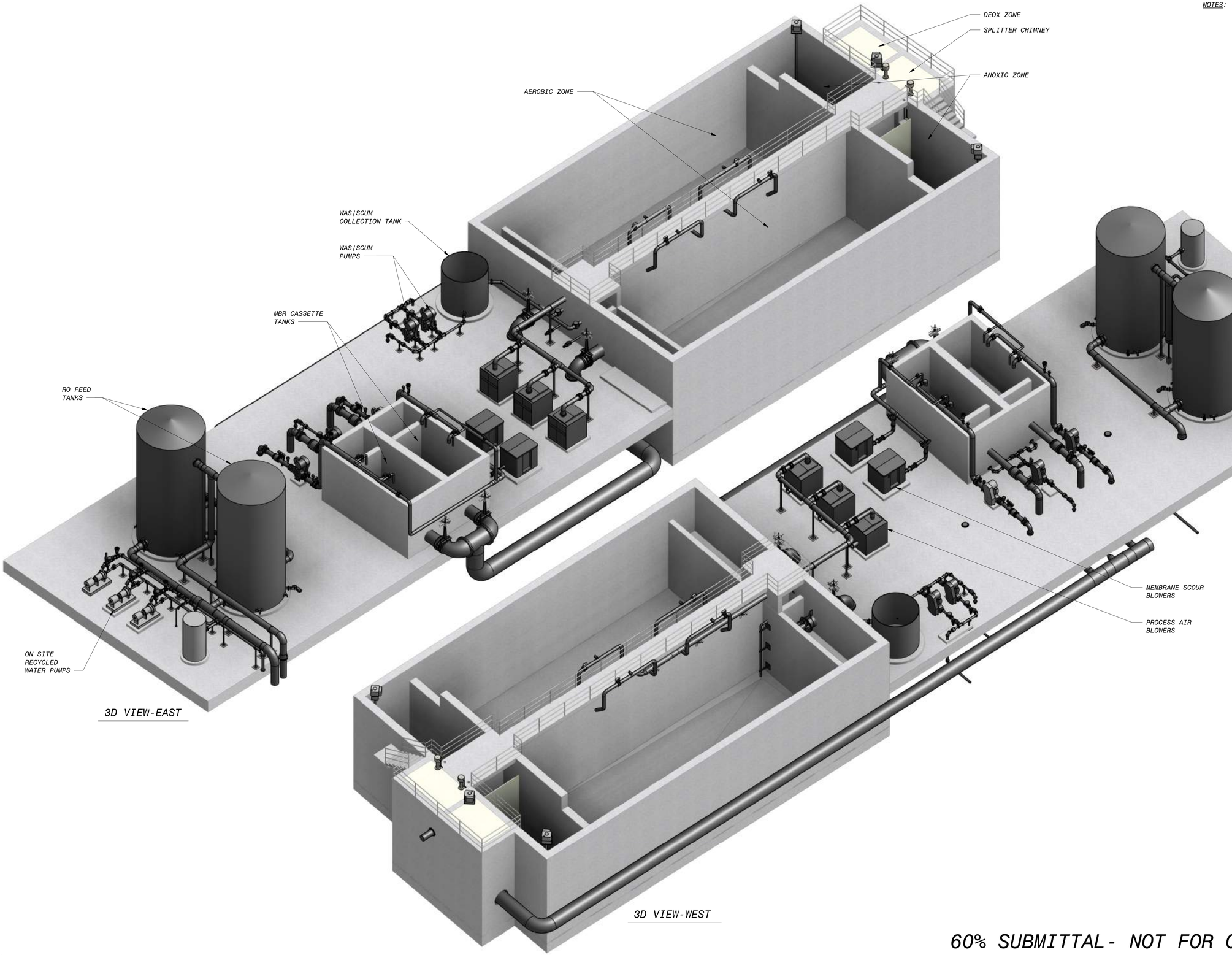

3D VIEW-EAST

3D VIEW-WEST

60% SUBMITTAL- NOT FOR CONSTRUCTION

NO.	BY	CHK	APP	DATE	REVISIONS AND RECORD OF USE
B	KEZ	RT	EVB	7/30/2019	60% SUBMITTAL
A	KEZ	RWF	EVB	3/5/2019	30% SUBMITTAL

BLACK & VEATCH JOINT VENTURE

BLACK & VEATCH

FILANC

CITY OF MORRO BAY
MORRO BAY WATER RECLAMATION FACILITY (WRF)

TREATMENT AREA - OVERALL
CIVIL-MECHANICAL
3D VIEWS

DESIGNED: KEZ
DETAILED: MAK
CHECKED:
APPROVED:
DATE:

0 1/2 1
IF THIS BAR DOES NOT MEASURE 1" THEN DRAWING IS NOT TO FULL SCALE

PROJECT NO.
400530

30-M-001
SHEET
OF

PLOTTED: 7/29/2019 2:05:17 PM
D400530

NOTES:

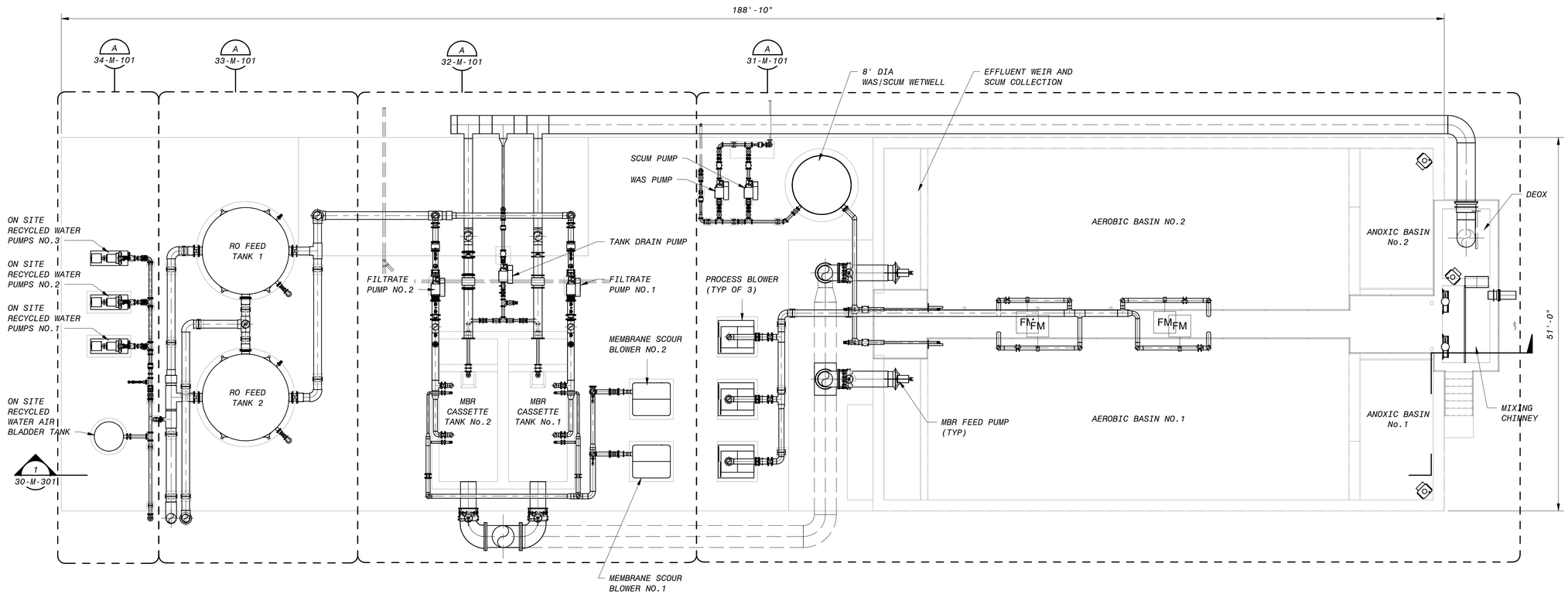

TREATMENT AREA - OVERALL - OPERATING LEVEL PLAN

1/8" = 1'-0"

8' 4' 0' 8' 16'

1/8" = 1'-0"

60% SUBMITTAL- NOT FOR CONSTRUCTION

NO.	BY	CHK	APP	DATE	REVISIONS AND RECORD OF USE
B	KEZ	RT	EVB	7/30/2019	60% SUBMITTAL
A	KEZ	RWF	EVB	3/5/2019	30% SUBMITTAL

BLACK & VEATCH JOINT VENTURE FILANC BLACK & VEATCH

CITY OF MORRO BAY
MORRO BAY WATER RECLAMATION FACILITY (WRF)

TREATMENT AREA - OVERALL CIVIL-MECHANICAL OPERATING LEVEL PLAN

DESIGNED: KEZ
DETAILED: MAK
CHECKED:
APPROVED:
DATE:

0 1/2 1

IF THIS BAR DOES NOT MEASURE 1" THEN DRAWING IS NOT TO FULL SCALE

PROJECT NO. 400530

30-M-101
SHEET
OF

PLOTTED: 7/29/2019 2:05:25 PM
D400530

NOTES:

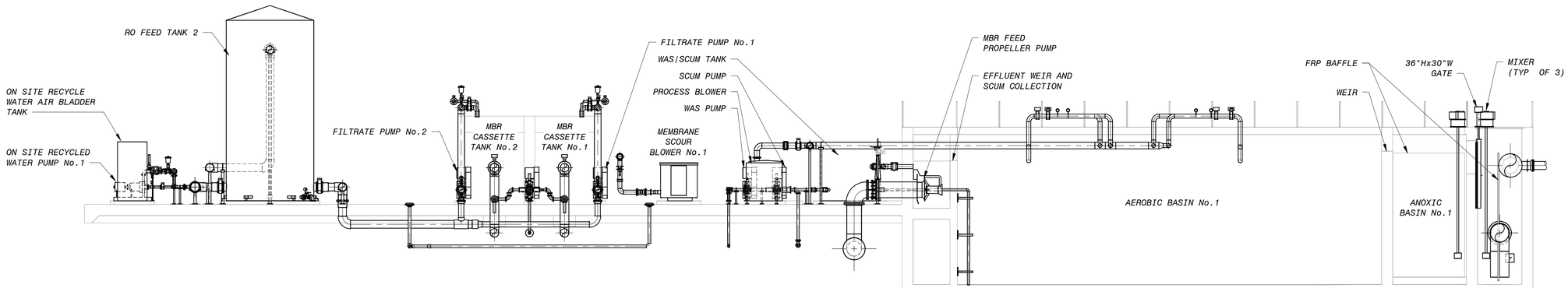

1 SECTION
30-M-101 1/8" = 1'-0"

8' 4' 0' 8' 16'
1/8" = 1'-0"

60% SUBMITTAL- NOT FOR CONSTRUCTION

NO.	BY	CHK	APP	DATE	REVISIONS AND RECORD OF USE
B	KEZ	RT	EVB	7/30/2019	60% SUBMITTAL
A	KEZ	RWF	EVB	3/5/2019	30% SUBMITTAL

BLACK & VEATCH JOINT VENTURE
BLACK & VEATCH
FILANC

CITY OF MORRO BAY
MORRO BAY WATER RECLAMATION FACILITY (WRF)

TREATMENT AREA - OVERALL
CIVIL-MECHANICAL
SECTION

DESIGNED: Designer
DETAILED: Author
CHECKED: Checker
APPROVED: Approver
DATE:

0 1/2 1
IF THIS BAR DOES NOT MEASURE 1" THEN DRAWING IS NOT TO FULL SCALE

PROJECT NO.
400530

30-M-301
SHEET
OF

PLOTTED: 7/29/2019 2:05:30 PM
D400530

WAS-V-0011
WAS-V-0009
WAS-P-0001
WAS PUMP
SCM-V-0007
SCM-V-0005
SCM-P-0001
SCUM PUMP
WAS-FE-0002
3"-WAS
2
31-M-301
7'-0"
1'-9"
1'-0"
10'-6"
6'-6"
MEM--2001
SCUM/WAS WETWELL
4'-0"
10'-0"
4'-6"
2'-6"
2'-6"
WAS-V-0003
WAS-V-0005
WAS-V-0001
WAS-FE-0001
WAS-V-0013
WAS-V-0002
DISMANTLING JOINT
(TYP OF 2)
BNR-V-2001
24"ML
MBR FEED PUMP
(TYP OF 2)
BNR-P-2001
AER-V-2101
DRN-V-2001
WAS-V-2001
AEROBIC BASIN No.2
3
31-M-301
2'-6"
5'-0"
6"-AA
5'-0"
6"-AA
2'-6"
AER-V-2201
19'-2"
FRP BAFFLE
WEIR
(TYP OF 2)
ANOXIC BASIN
NO.2
BNR-MXR-2001
MIXER
(TYP OF 3)
4
31-M-301
30"-RAS
DEOX
RAS-MXR-0001
36"-RAS
12"WWS
BNR-G-0002
MIXING
CHIMNEY
FRP BAFFLE
1
31-M-301
BNR-G-0001
SEE SHEET 32-M-101 FOR CONTINUATION
AER-V-0307
AER-V-0306
AER-BL-0301
BNR DRAIN PIPE
CAMLOCK CONNECTION
5'-6"
9'-0"
3'-3"
8'-6"
8'-6"
6'-9"
3'-6"
AER-V-0207
AER-BL-0201
AER-V-0206
AER-V-0106
AER-BL-0101
AER-V-0107
3'-0"
3'-0"
3'-0"
PROCESS AIR
BLOWERS
(TYP OF 3)
6"-WAS
3"-DRN
AER-FE-2101
AER-FE-1101
FM
FM
FM
FM
6"-AA
6"-AA
6"-AA
AER-FE-2201
AER-FE-1201
AER-V-1201
WAS-V-1001
DRN-V-1001
AER-V-1101
BNR-P-1001
5'-0"
9'-8"
2'-6"
5'-0"
5'-0"
2'-6"
19'-2"
MBR FEED PUMP HOIST
(TYP)
24"ML
BNR-V-1001
AEROBIC BASIN No.1
FRP BAFFLE
ANOXIC BASIN
NO.1
BNR-MXR-1001
1
31-M-301
5'-6"
9'-3"
6'-6"
A
BNR BASINS - OPERATING LEVEL PLAN
30-M-101 1/4" = 1'-0"
4' 2' 0' 4' 8'
1/4" = 1'-0"
60% SUBMITTAL- NOT FOR CONSTRUCTION

NO.	BY	CHK	APP	DATE	REVISIONS AND RECORD OF USE
B	KEZ	RT	EVB	7/30/2019	60% SUBMITTAL
A	KEZ	RWF	EVB	3/5/2019	30% SUBMITTAL

BLACK & VEATCH
JOINT VENTURE
FILANC
BLACK & VEATCH

CITY OF MORRO BAY
MORRO BAY WATER
RECLAMATION FACILITY (WRF)

TREATMENT AREA - BNR BASINS
CIVIL-MECHANICAL
OPERATING LEVEL PLAN

DESIGNED: Designer
DETAILED: Author
CHECKED: Checker
APPROVED: Approver
DATE:

0 1/2 1
IF THIS BAR DOES NOT MEASURE 1" THEN DRAWING IS NOT TO FULL SCALE

PROJECT NO.
400530

31-M-101
SHEET
OF

PLOTTED: 7/29/2019 2:05:33 PM
D400530

NOTES:

1. AERATION SYSTEM SUPPLIER SHALL PROVIDE CONNECTION TO AERATION DROP LEG IN THE LOCATION SHOWN.

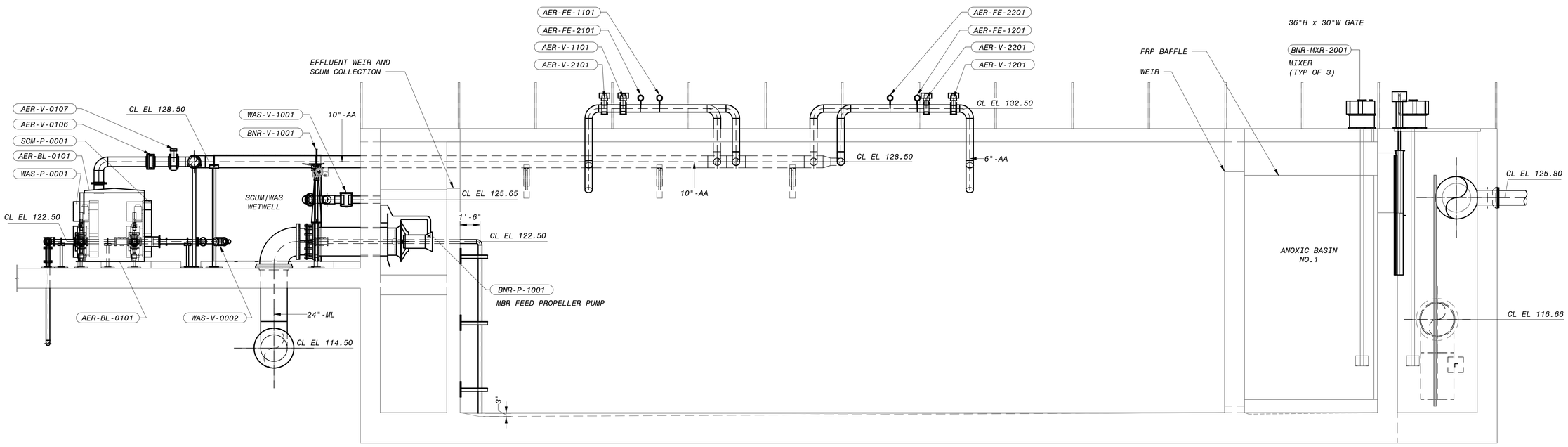

1 SECTION
31-M-101 1/4" = 1'-0"

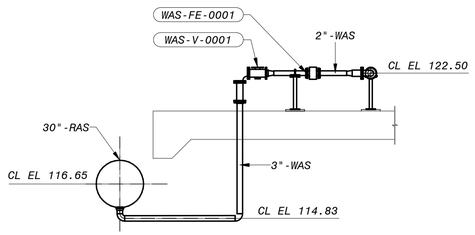

2 SECTION
31-M-101 1/4" = 1'-0"

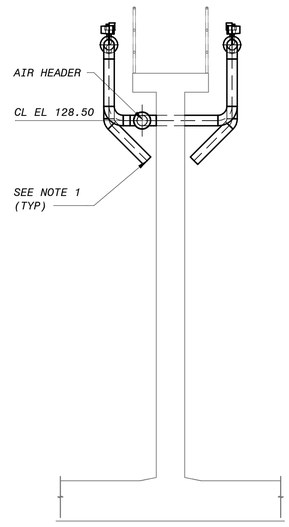

3 SECTION
31-M-101 1/4" = 1'-0"

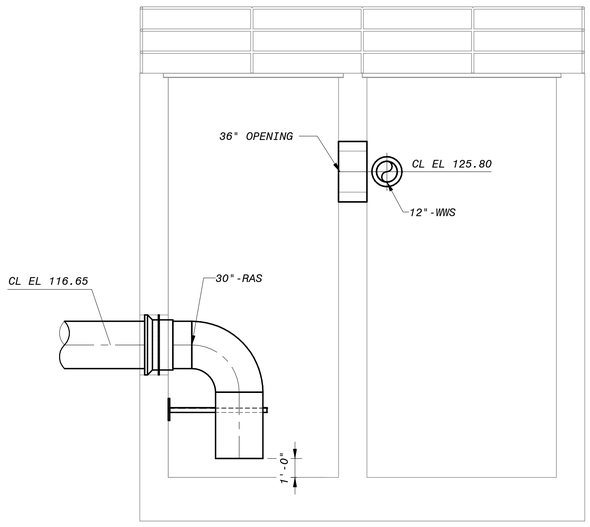

4 SECTION
31-M-101 1/4" = 1'-0"

4' 2' 0' 4' 8'
1/4" = 1'-0"

60% SUBMITTAL - NOT FOR CONSTRUCTION

NO.	BY	CHK	APP
B	KEZ	RT	EVB
A	KEZ	RWF	EVB

REVISIONS AND RECORD OF USE

DATE
7/30/2019 60% SUBMITTAL
3/5/2019 30% SUBMITTAL

BLACK & VEATCH JOINT VENTURE
BLACK & VEATCH
FILANC

CITY OF MORRO BAY
MORRO BAY WATER RECLAMATION FACILITY (WRF)

TREATMENT AREA - BNR BASINS
CIVIL-MECHANICAL
SECTION AND DETAILS 1

DESIGNED: KEZ
DETAILED: MAK
CHECKED:
APPROVED:
DATE:

0 1/2 1
IF THIS BAR DOES NOT MEASURE 1" THEN DRAWING IS NOT TO FULL SCALE

PROJECT NO. 400530

31-M-301
SHEET
OF

PLOTTED: 7/29/2019 2:05:37 PM
D400530

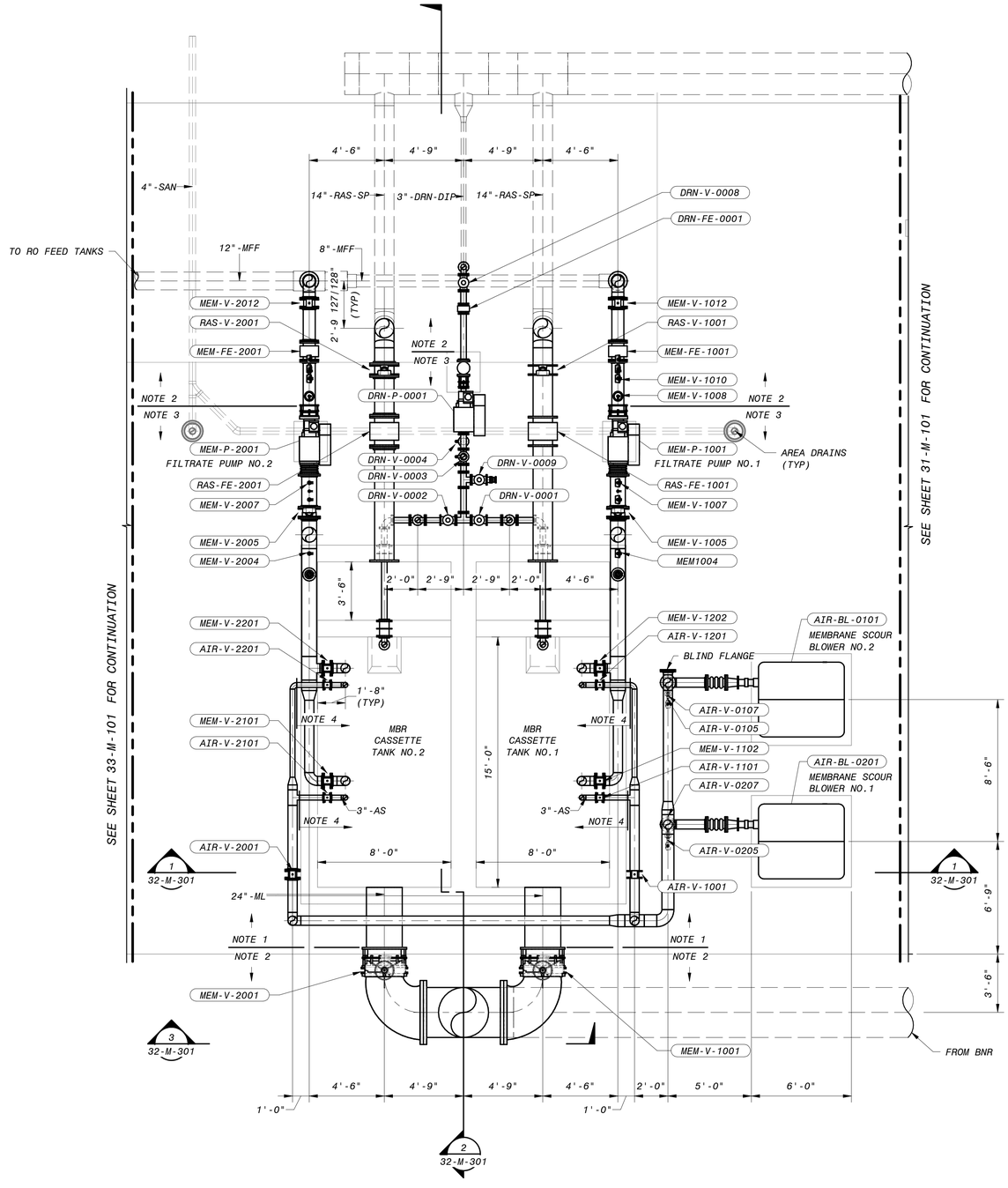

A MBR SYSTEM - OPERATING LEVEL PLAN
30-M-101 1/4" = 1'-0"

NOTES:

1. INFLUENT MANIFOLD AND PIPING PROVIDED BY MBR SYSTEM SUPPLIER.
2. DMJ AND PIPING IN DIRECTION OF ARROW PROVIDED BY OTHERS.
3. PUMP SUCTION PIPING, INSTRUMENTS AND OTHER ITEMS INDICATED ON THE P&IDS SHALL BE SUPPLIED AND DESIGNED BY THE MBR SYSTEM SUPPLIER.
4. PIPING AND AERATION CONNECTIONS PROVIDED BY MBR SYSTEM SUPPLIER.

4' 2' 0' 4' 8'
1/4" = 1'-0"

60% SUBMITTAL - NOT FOR CONSTRUCTION

NO.	BY	CHK	APP	DATE	REVISIONS AND RECORD OF USE
B	KEZ	RT	EVB	7/30/2019	60% SUBMITTAL
A	KEZ	RWF	EVB	3/5/2019	30% SUBMITTAL

BLACK & VEATCH
JOINT VENTURE
BLACK & VEATCH
FILANC

CITY OF MORRO BAY
MORRO BAY WATER
RECLAMATION FACILITY (WRF)

TREATMENT AREA - MBR SYSTEM
CIVIL-MECHANICAL
OPERATING LEVEL PLAN

DESIGNED: Designer
DETAILED: Author
CHECKED: Checker
APPROVED: Approver
DATE:

0 1/2 1
IF THIS BAR DOES NOT MEASURE 1" THEN DRAWING IS NOT TO FULL SCALE

PROJECT NO.
400530

32-M-101
SHEET
OF

PLOTTED: 7/29/2019 2:05:41 PM
D400530

NOTES:

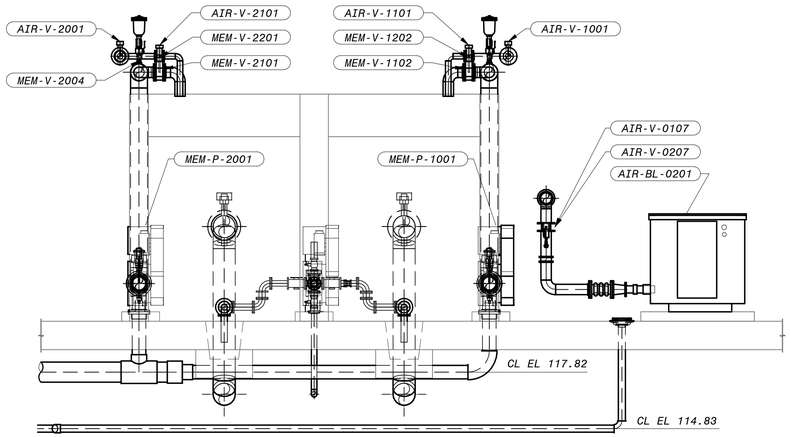

1 SECTION
32-M-101 1/4" = 1'-0"

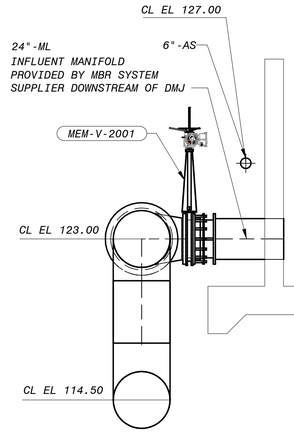

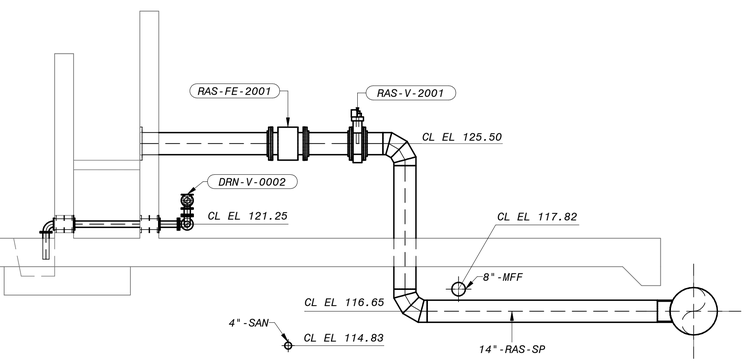

2 SECTION
32-M-101 1/4" = 1'-0"

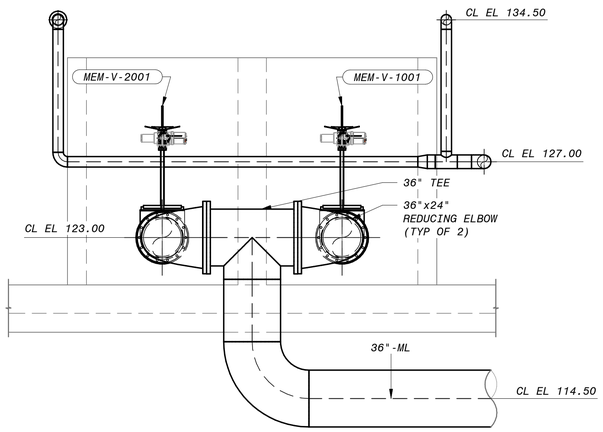

3 SECTION
32-M-101 1/4" = 1'-0"

4' 2' 0' 4' 8'
1/4" = 1'-0"

60% SUBMITTAL - NOT FOR CONSTRUCTION

NO.	BY	CHK	APP	DATE	REVISIONS AND RECORD OF USE
B	KEZ	RT	EVB	7/30/2019	60% SUBMITTAL
A	KEZ	RWF	EVB	3/5/2019	30% SUBMITTAL

BLACK & VEATCH JOINT VENTURE
BLACK & VEATCH
FILANC

CITY OF MORRO BAY
MORRO BAY WATER
RECLAMATION FACILITY (WRF)

TREATMENT AREA - MBR SYSTEM
CIVIL-MECHANICAL
SECTION

DESIGNED: Designer
DETAILED: Author
CHECKED: Checker
APPROVED: Approver
DATE:

0 1/2 1
IF THIS BAR DOES NOT MEASURE 1" THEN DRAWING IS NOT TO FULL SCALE

PROJECT NO.
400530

32-M-301
SHEET
OF

PLOTTED: 7/29/2019 2:05:45 PM
D400530

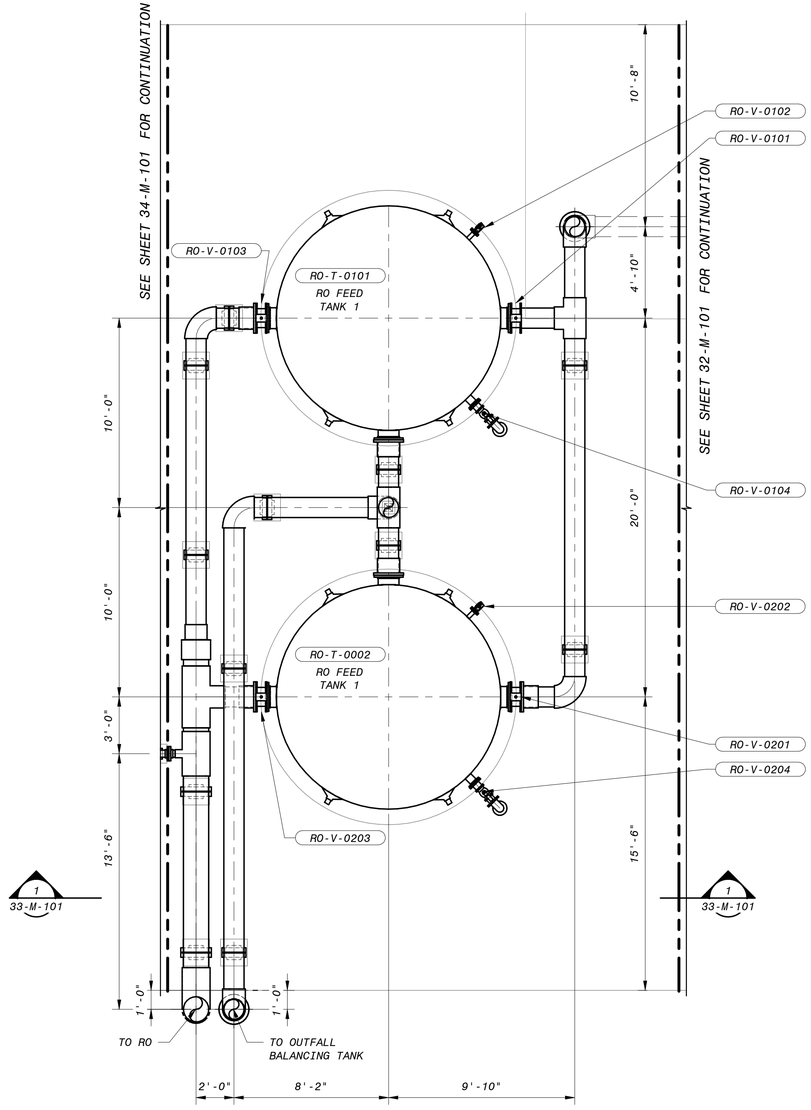

A RO FEED TANKS - OPERATING LEVEL PLAN
30-M-101 1/4" = 1'-0"

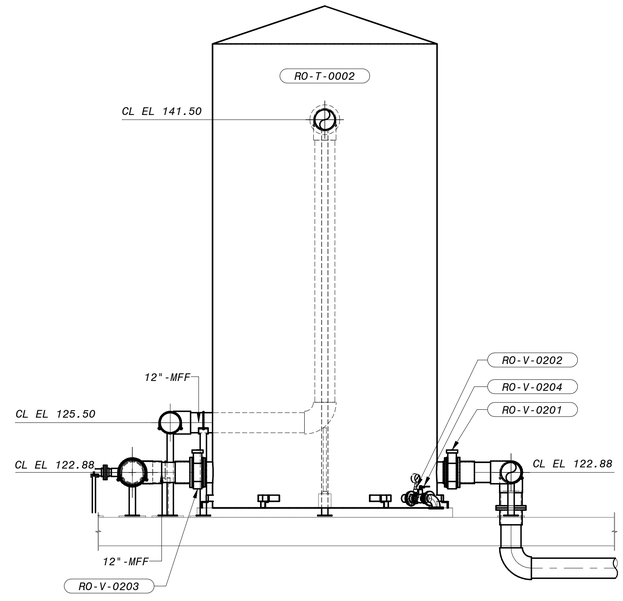

1 SECTION
33-M-101 1/4" = 1'-0"

NOTES:

4' 2' 0' 4' 8'
1/4" = 1'-0"

60% SUBMITTAL - NOT FOR CONSTRUCTION

NO.	BY	CHK	APP	DATE	REVISIONS AND RECORD OF USE
B	KEZ	RT	EVB	7/30/2019	60% SUBMITTAL
A	KEZ	RWF	EVB	3/5/2019	30% SUBMITTAL

BLACK & VEATCH
JOINT VENTURE
BLACK & VEATCH
FILANC

CITY OF MORRO BAY
MORRO BAY WATER
RECLAMATION FACILITY (WRF)

TREATMENT AREA - RO FEED TANKS
CIVIL-MECHANICAL
OPERATING LEVEL PLAN AND SECTIONS

DESIGNED: Designer
DETAILED: Author
CHECKED: Checker
APPROVED: Approver
DATE:

0 1/2 1
IF THIS BAR DOES NOT MEASURE 1" THEN DRAWING IS NOT TO FULL SCALE

PROJECT NO.
400530

33-M-101
SHEET
OF

PLOTTED: 7/29/2019 2:05:47 PM
D400530

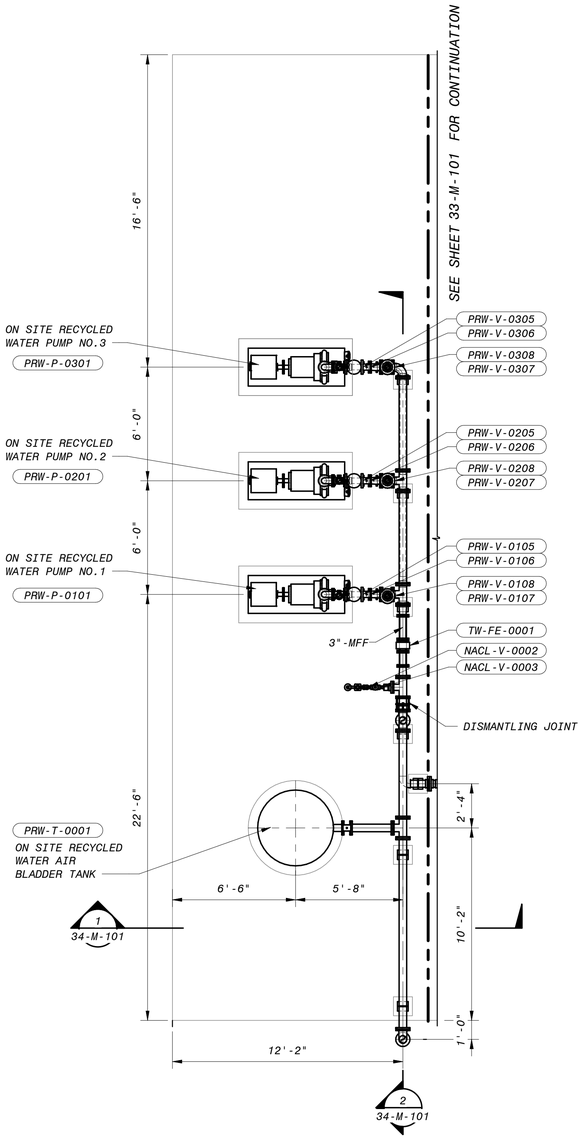

A RECYCLED WATER PUMP STATION - OPERATING LEVEL PLAN
30-M-101 1/4" = 1'-0"

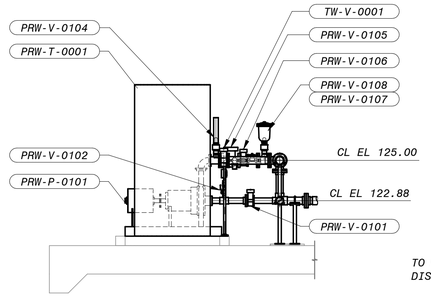

1 SECTION
34-M-101 1/4" = 1'-0"

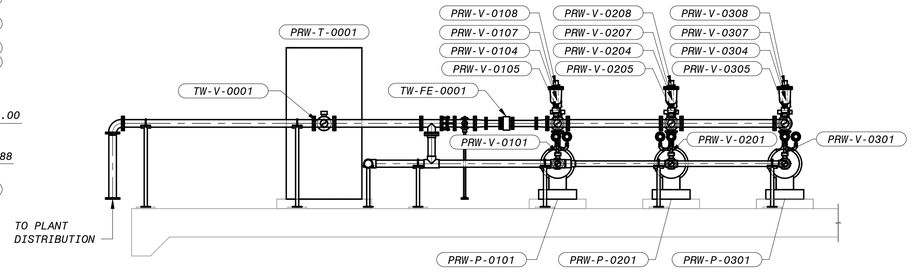

2 SECTION
34-M-101 1/4" = 1'-0"

NOTES:

NO.	BY	CHK	APP	DATE	REVISIONS AND RECORD OF USE
B	KEZ	RT	EVB	7/30/2019	60% SUBMITTAL
A	KEZ	RWF	EVB	3/5/2019	30% SUBMITTAL

BLACK & VEATCH
JOINT VENTURE
BLACK & VEATCH
FILANC

CITY OF MORRO BAY
MORRO BAY WATER
RECLAMATION FACILITY (WRF)
TREATMENT AREA - RECYCLED WATER PUMP STATION
CIVIL-MECHANICAL
OPERATING LEVEL PLAN AND SECTIONS

DESIGNED: Designer
DETAILED: Author
CHECKED: Checker
APPROVED: Approver
DATE:

0 1/2 1
IF THIS BAR DOES NOT MEASURE 1" THEN DRAWING IS NOT TO FULL SCALE

PROJECT NO.
400530

34-M-101
SHEET
OF

4' 2' 0' 4' 8'
1/4" = 1'-0"

60% SUBMITTAL - NOT FOR CONSTRUCTION

PLOTTED: 7/29/2019 2:05:30 PM
D400530

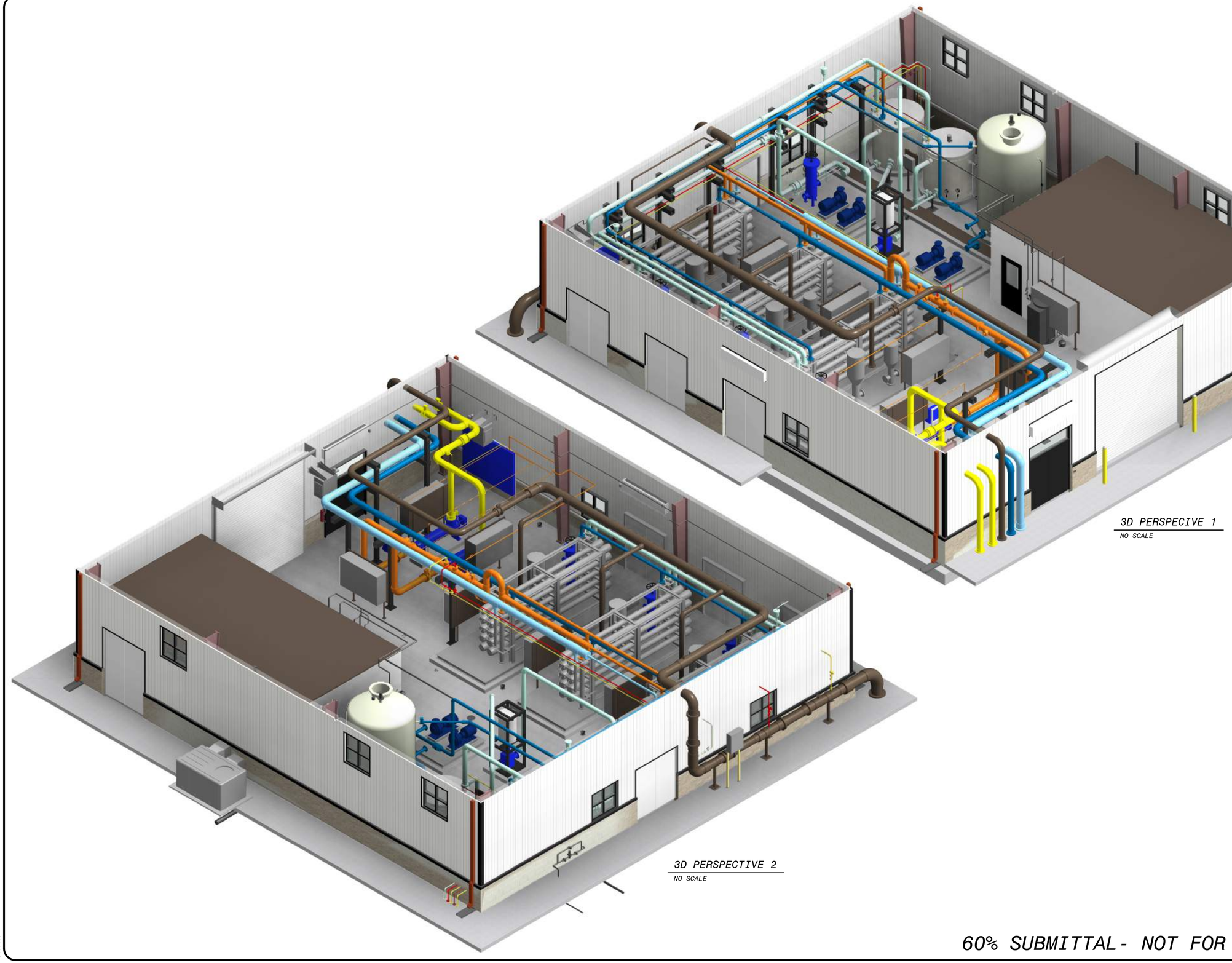

3D PERSPECIVE 1
NO SCALE

3D PERSPECTIVE 2
NO SCALE

60% SUBMITTAL- NOT FOR CONSTRUCTION

NO.	BY	CHK	APP	DATE	REVISIONS AND RECORD OF USE
B	ADV	RIT	EVB	7/30/2019	60% SUBMITTAL
A	ADV	RWF	EVB	3/5/2019	30% SUBMITTAL

BLACK & VEATCH
JOINT VENTURE
FILANC
BLACK & VEATCH

CITY OF MORRO BAY
MORRO BAY WATER
RECLAMATION FACILITY (WRF)

RO/UV BUILDING - OVERALL
CIVIL-MECHANICAL
3D VIEWS

DESIGNED: ADV
DETAILED: MAK
CHECKED:
APPROVED:
DATE:

0 1/2 1
IF THIS BAR DOES NOT MEASURE 1" THEN DRAWING IS NOT TO FULL SCALE

PROJECT NO.
400530

50-M-001
SHEET
OF XXX

PLOTTED: 30-07-2019 16:54:17
D400530

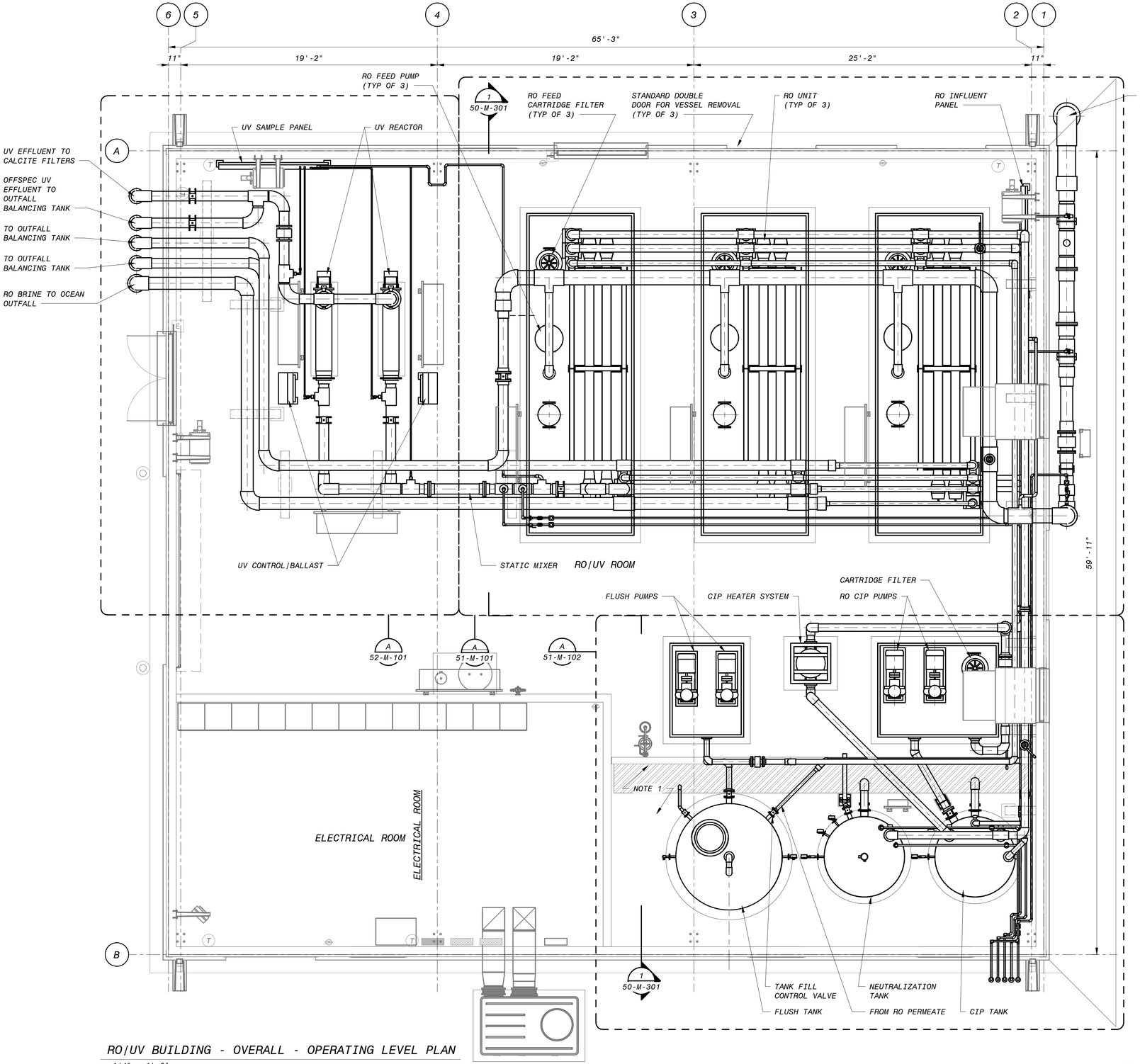

RO/UV BUILDING - OVERALL - OPERATING LEVEL PLAN

1/4" = 1'-0"

NOTES:

1. TANK CONTAINMENT AREA TO BE COATED PER THE REQUIREMENTS OF SPECIFICATION 099724.

4' 2' 0' 4' 8'

1/4" = 1'-0"

60% SUBMITTAL - NOT FOR CONSTRUCTION

NO.	BY	CHK	APP	DATE	REVISIONS AND RECORD OF USE
B	ADV	RJT	EVB	7/30/2019	60% SUBMITTAL
A	ADV	RWF	EVB	3/5/2019	30% SUBMITTAL

BLACK & VEATCH JOINT VENTURE

BLACK & VEATCH

FILANC

CITY OF MORRO BAY
MORRO BAY WATER RECLAMATION FACILITY (WRF)

RO/UV BUILDING - OVERALL - CIVIL-MECHANICAL OPERATING LEVEL PLAN

DESIGNED: ADV
DETAILED: MAK
CHECKED:
APPROVED:
DATE:

0 1/2 1

IF THIS BAR DOES NOT MEASURE 1" THEN DRAWING IS NOT TO FULL SCALE

PROJECT NO. 400530

50-M-101

SHEET OF XXX

PLOTTED: 30-07-2019 16:54:21

D400530

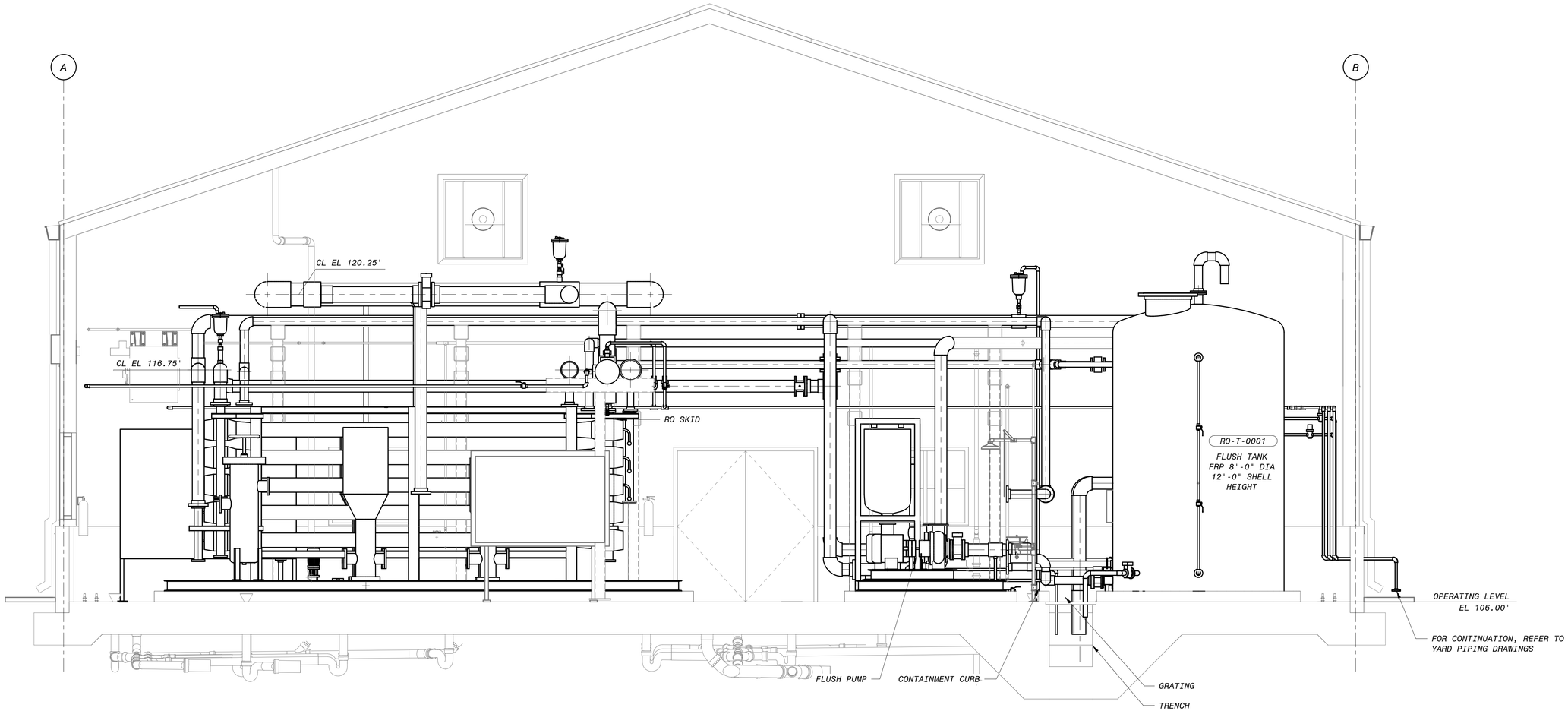

1 SECTION
50-M-101 3/8" = 1'-0"

12" 0' 1' 2' 3' 4' 5' 6' 7'
3/8" = 1'-0"

60% SUBMITTAL - NOT FOR CONSTRUCTION

NO.	BY	CHK	APP	DATE	REVISIONS AND RECORD OF USE
B	ADV	RT	EVB	7/30/2019	60% SUBMITTAL
A	ADV	RWF	EVB	3/5/2019	30% SUBMITTAL

BLACK & VEATCH
JOINT VENTURE
BLACK & VEATCH
FILANC

CITY OF MORRO BAY
MORRO BAY WATER
RECLAMATION FACILITY (WRF)

RO/UV BUILDING - OVERALL
CIVIL-MECHANICAL
SECTION

DESIGNED: ADV
DETAILED: MAK
CHECKED:
APPROVED:
DATE:

0 1/2 1
IF THIS BAR DOES NOT MEASURE 1" THEN DRAWING IS NOT TO FULL SCALE

PROJECT NO.
400530

50-M-301
SHEET
OF XXX

PLOTTED: 30-07-2019 16:54:25
D400530

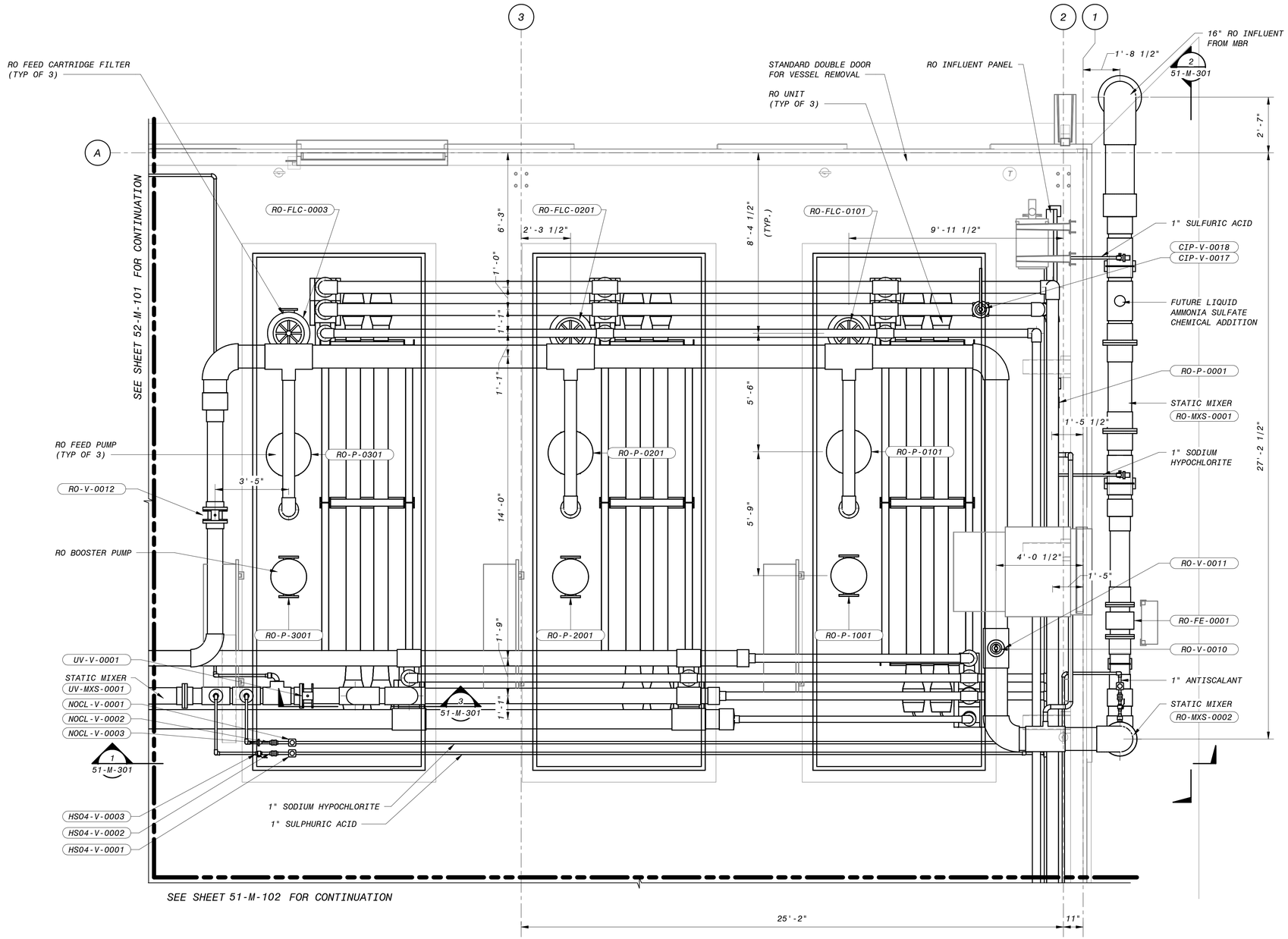

NOTES:

1. RO CONFIGURATION AND CONNECTION LOCATIONS TO BE FINALIZED WHEN EQUIPMENT SELECTED.

A RO SYSTEM - MEMBRANE RACKS PLAN

50-M-101 3/8" = 1'-0"

12" 0' 1' 2' 3' 4' 5' 6' 7'

3/8" = 1'-0"

60% SUBMITTAL - NOT FOR CONSTRUCTION

NO.	BY	CHK	APP	DATE	REVISIONS AND RECORD OF USE
B	ADV	RT	EVB	7/30/2019	60% SUBMITTAL
A	ADV	RWF	EVB	3/5/2019	30% SUBMITTAL

BLACK & VEATCH

JOINT VENTURE

BLACK & VEATCH

FILANC

CITY OF MORRO BAY
MORRO BAY WATER RECLAMATION FACILITY (WRF)

RO/UV BUILDING - RO SYSTEM
CIVIL-MECHANICAL
MEMBRANE RACKS PLAN

DESIGNED: ADV
DETAILED: RMB
CHECKED:
APPROVED:
DATE:

0 1/2 1

IF THIS BAR DOES NOT MEASURE 1" THEN DRAWING IS NOT TO FULL SCALE

PROJECT NO. 400530

51-M-101 SHEET OF XXX

PLOTTED: 30-07-2019 16:34:27
D400530

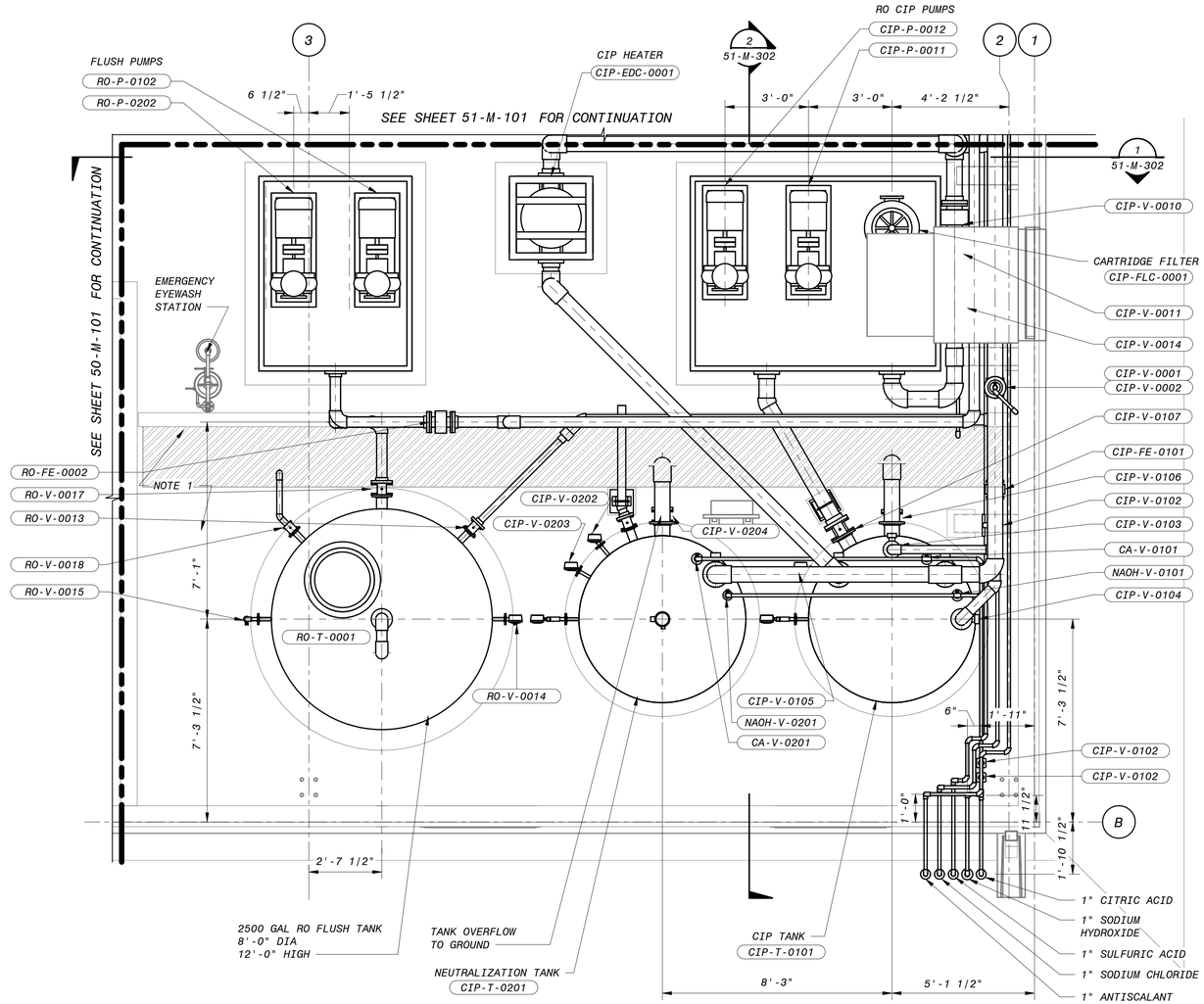

A RO SYSTEM - CIP & FLUSH SYSTEMS PLAN

50-M-101 3/8" = 1'-0"

NOTES:

1. CIP TANK AREA AND CONTAINMENT TRENCH TO BE COATED PER REQUIREMENTS OF CORROSION PROTECTION SYSTEMS SPECIFICATIONS.

NO.	BY	CHK	APP	DATE	REVISIONS AND RECORD OF USE
B	ADV	RT	EVB	7/30/2019	60% SUBMITTAL
A	ADV	RWF	EVB	3/5/2019	30% SUBMITTAL

BLACK & VEATCH JOINT VENTURE

BLACK & VEATCH

FILANC

CITY OF MORRO BAY
MORRO BAY WATER
RECLAMATION FACILITY (WRF)

RO/UV BUILDING - RO SYSTEM
CIVIL-MECHANICAL
CIP & FLUSH SYSTEMS PLAN

DESIGNED: Designer
DETAILED: Author
CHECKED: Checker
APPROVED: Approver
DATE:

0 1/2 1

IF THIS BAR DOES NOT MEASURE 1" THEN DRAWING IS NOT TO FULL SCALE

PROJECT NO.
400530

51-M-102
SHEET
OF XXX

12" 0' 1' 2' 3' 4' 5' 6' 7'

3/8" = 1'-0"

60% SUBMITTAL - NOT FOR CONSTRUCTION

PLOTTED: 30-07-2019 16:54:29
D400530

NOTES:

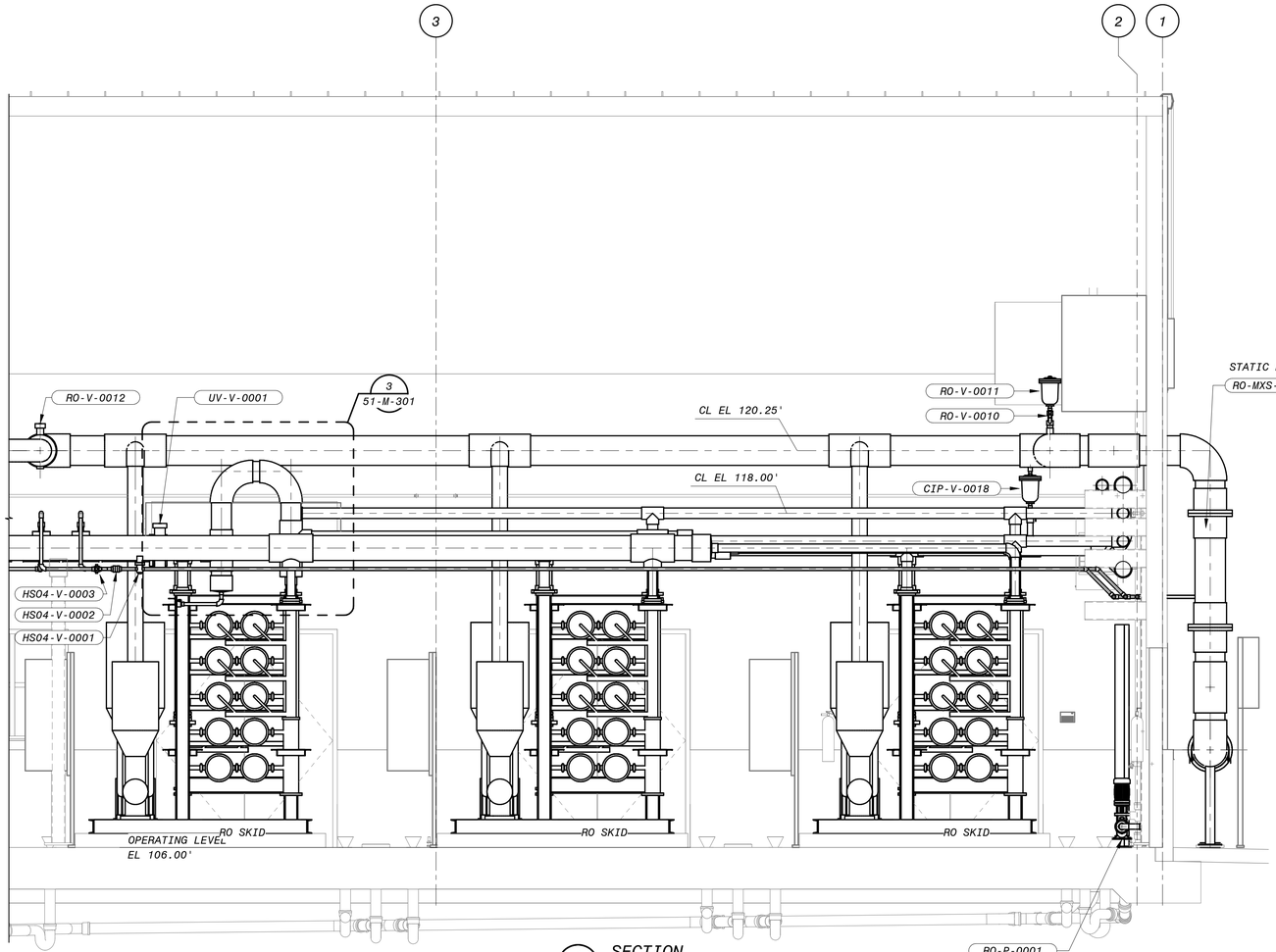

1 SECTION
51-M-101 3/8" = 1'-0"

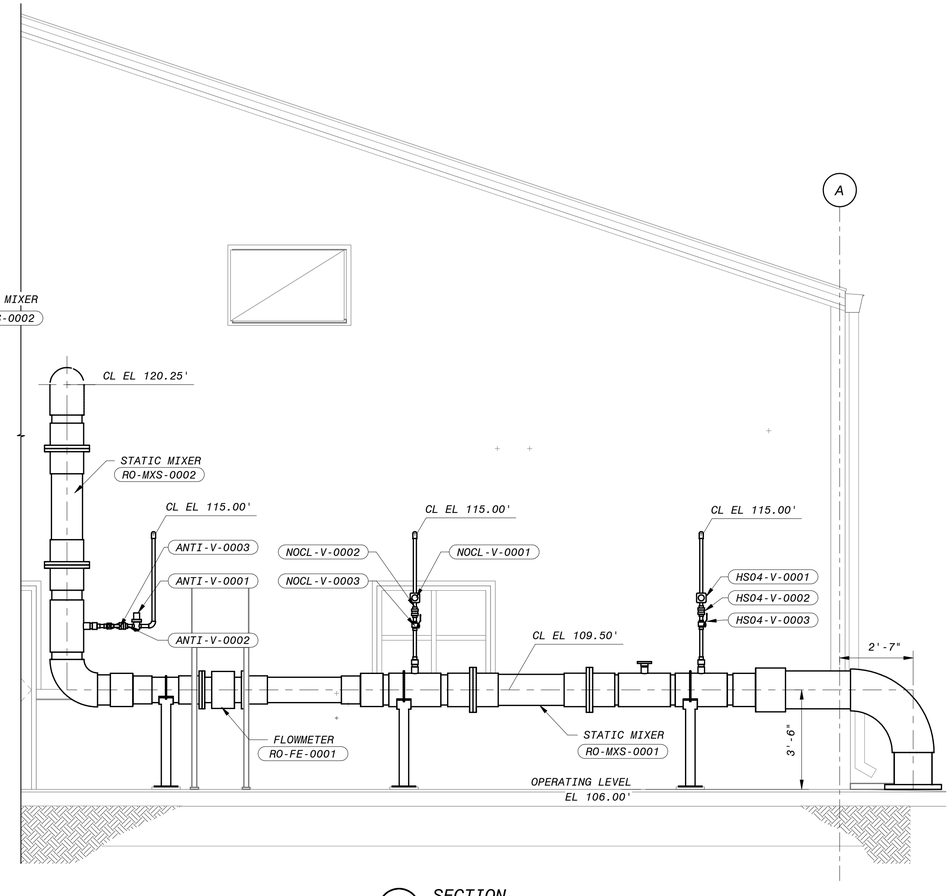

2 SECTION
51-M-101 3/8" = 1'-0"

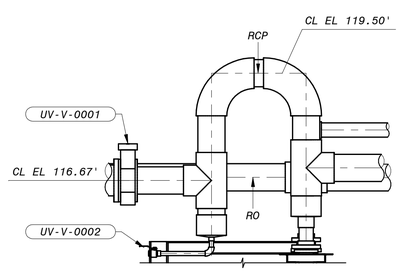

BACKFLOW PREVENTION LOOP

3 SECTION
51-M-101 1/2" = 1'-0"

12' 6' 0' 1' 2' 3' 4' 5'
1/2" = 1'-0"

12" 0' 1' 2' 3' 4' 5' 6' 7'
3/8" = 1'-0"

60% SUBMITTAL- NOT FOR CONSTRUCTION

NO.	BY	CHK	APP	DATE	REVISIONS AND RECORD OF USE
				7/30/2019	60% SUBMITTAL
B	ADV	RT	EVB	3/5/2019	30% SUBMITTAL
A	ADV	RWF	EVB		

BLACK & VEATCH JOINT VENTURE
BLACK & VEATCH
FILANC

CITY OF MORRO BAY
MORRO BAY WATER
RECLAMATION FACILITY (WRF)

RO-UV BUILDING - RO SYSTEM
CIVIL-MECHANICAL
SECTIONS AND DETAILS 1

DESIGNED: Designer
DETAILED: Author
CHECKED: Checker
APPROVED: Approver
DATE:

0 1/2 1
IF THIS BAR DOES NOT MEASURE 1" THEN DRAWING IS NOT TO FULL SCALE

PROJECT NO.
400530

51-M-301
SHEET
OF XXX

PLOTTED: 30-07-2019 16:54:33
D400530

NOTES:

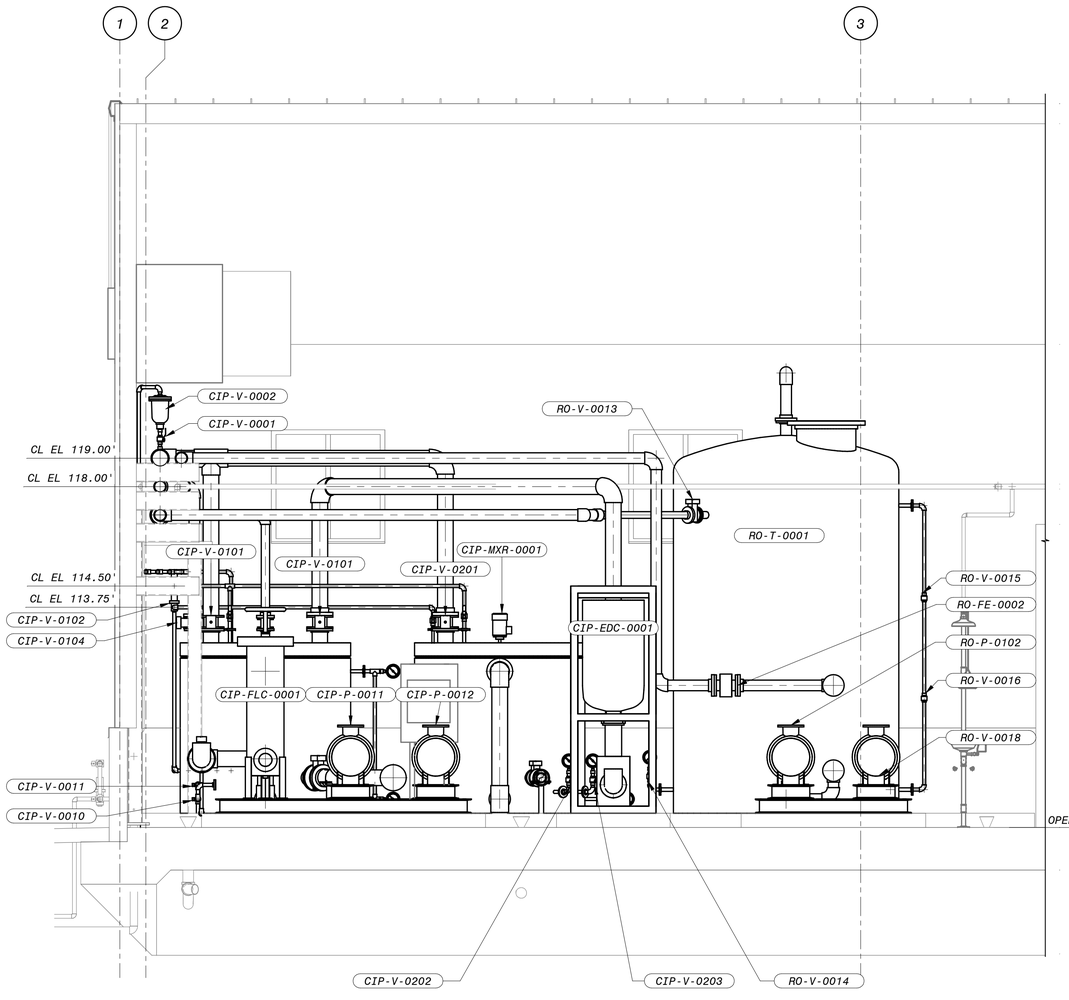

1 SECTION
51-M-102 3/8" = 1'-0"

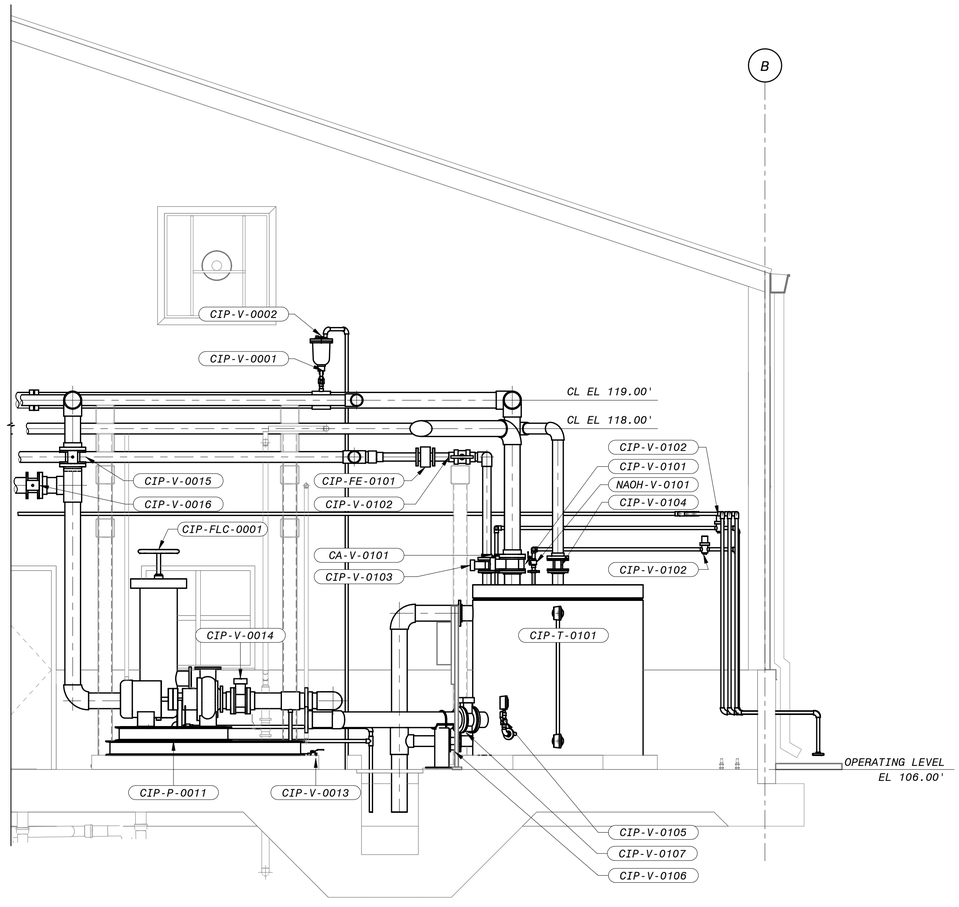

2 SECTION
51-M-102 3/8" = 1'-0"

12" 0' 1' 2' 3' 4' 5' 6' 7'
3/8" = 1'-0"

60% SUBMITTAL - NOT FOR CONSTRUCTION

NO.	BY	CHK	APP	DATE	REVISIONS AND RECORD OF USE
B	ADV	RT	EVB	7/30/2019	60% SUBMITTAL
A	ADV	RWF	EVB	3/5/2019	30% SUBMITTAL

BLACK & VEATCH
JOINT VENTURE
FILANC
BLACK&VEATCH

CITY OF MORRO BAY
MORRO BAY WATER
RECLAMATION FACILITY (WRF)

RO/UV BUILDING - RO SYSTEM
CIVIL-MECHANICAL
SECTIONS AND DETAILS 2

DESIGNED: Designer
DETAILED: Author
CHECKED: Checker
APPROVED: Approver
DATE:

0 1/2 1
IF THIS BAR DOES NOT MEASURE 1" THEN DRAWING IS NOT TO FULL SCALE

PROJECT NO.
400530

51-M-302
SHEET
OF XXX

PLOTTED: 30-07-2019 16:54:36
D400530

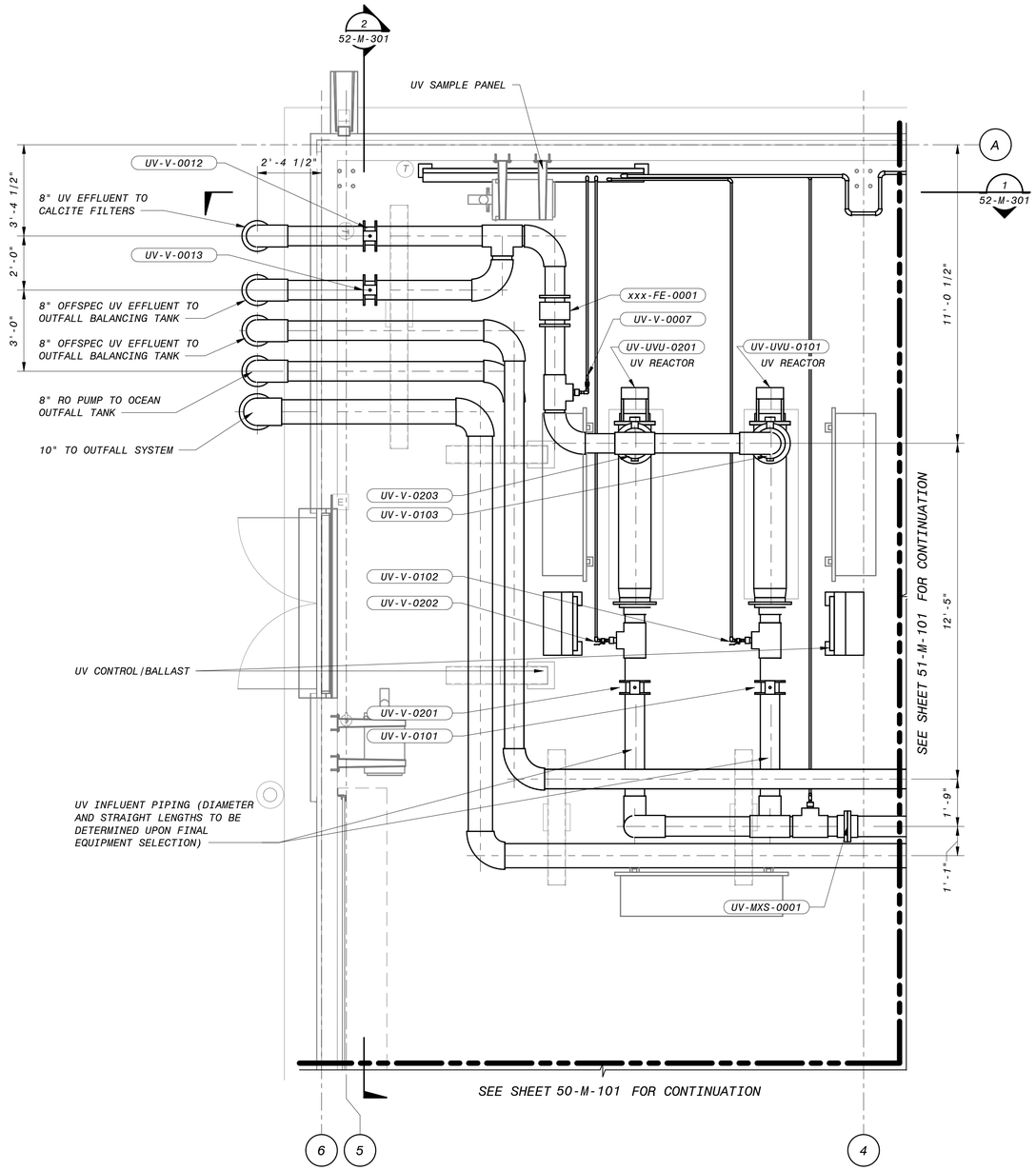

A UV SYSTEM - REACTOR SYSTEM PLAN

50-M-101 3/8" = 1'-0"

NOTES:

12" 0' 1' 2' 3' 4' 5' 6' 7'

3/8" = 1'-0"

60% SUBMITTAL- NOT FOR CONSTRUCTION

NO.	BY	CHK	APP	DATE	REVISIONS AND RECORD OF USE
B	ADV	RT	EVB	7/30/2019	60% SUBMITTAL
A	ADV	RWF	EVB	3/5/2019	30% SUBMITTAL

BLACK & VEATCH
JOINT VENTURE
FILANC
BLACK & VEATCH

CITY OF MORRO BAY
MORRO BAY WATER
RECLAMATION FACILITY (WRF)

RO/UV BUILDING - UV SYSTEM
CIVIL-MECHANICAL
REACTOR SYSTEM PLAN

DESIGNED: Designer
DETAILED: Author
CHECKED: Checker
APPROVED: Approver
DATE:

0 1/2 1

IF THIS BAR DOES NOT MEASURE 1" THEN DRAWING IS NOT TO FULL SCALE

PROJECT NO.
400530

52-M-101
SHEET
OF XXX

PLOTTED: 30-07-2019 16:54:37
D400530

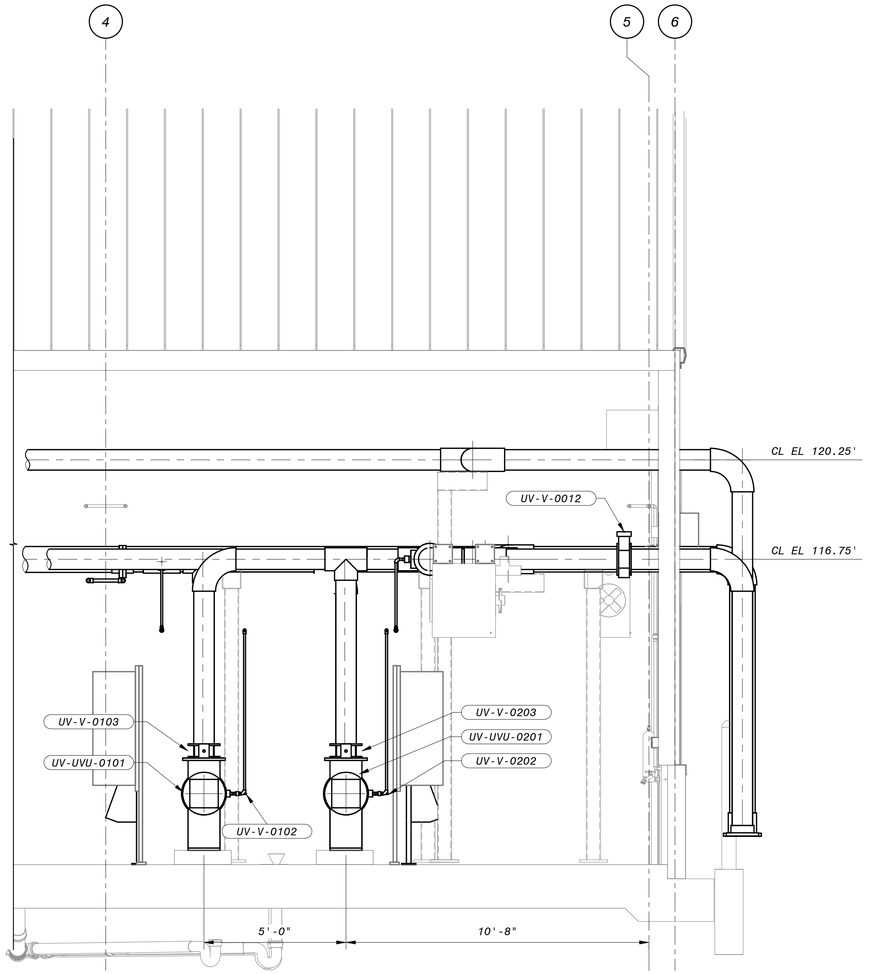

1 SECTION
52-M-101 3/8" = 1'-0"

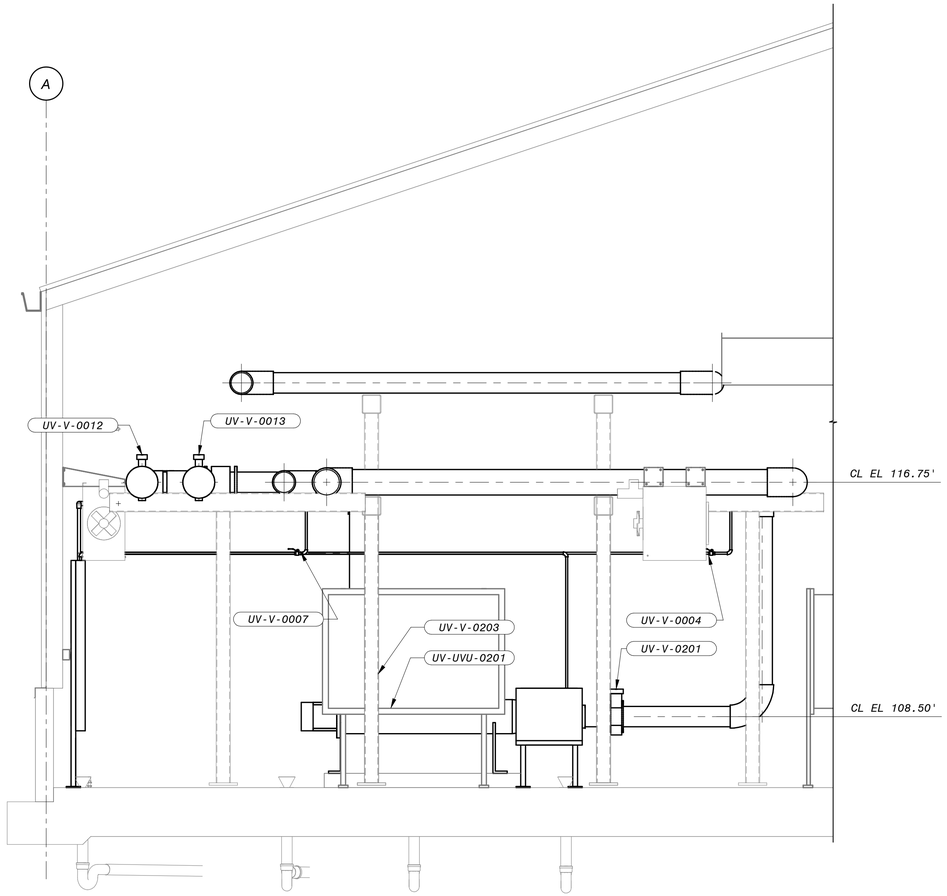

2 SECTION
52-M-101 3/8" = 1'-0"

12" 0' 1' 2' 3' 4' 5' 6' 7'
3/8" = 1'-0"

60% SUBMITTAL- NOT FOR CONSTRUCTION

NO.	BY	CHK	APP	DATE	REVISIONS AND RECORD OF USE
B	ADV	RT	EVB	7/30/2019	60% SUBMITTAL
A	ADV	RWF	EVB	3/5/2019	30% SUBMITTAL

BLACK & VEATCH
JOINT VENTURE
FILANC
BLACK&VEATCH

CITY OF MORRO BAY
MORRO BAY WATER
RECLAMATION FACILITY (WRF)

RO/UV BUILDING - UV SYSTEM
CIVIL-MECHANICAL
SECTIONS AND DETAILS 1

DESIGNED: Designer
DETAILED: Author
CHECKED: Checker
APPROVED: Approver
DATE:

0 1/2 1
IF THIS BAR DOES NOT MEASURE 1" THEN DRAWING IS NOT TO FULL SCALE

PROJECT NO.
400530

52-M-301
SHEET
OF XXX

PLOTTED: 30-07-2019 16:54:40
D400530

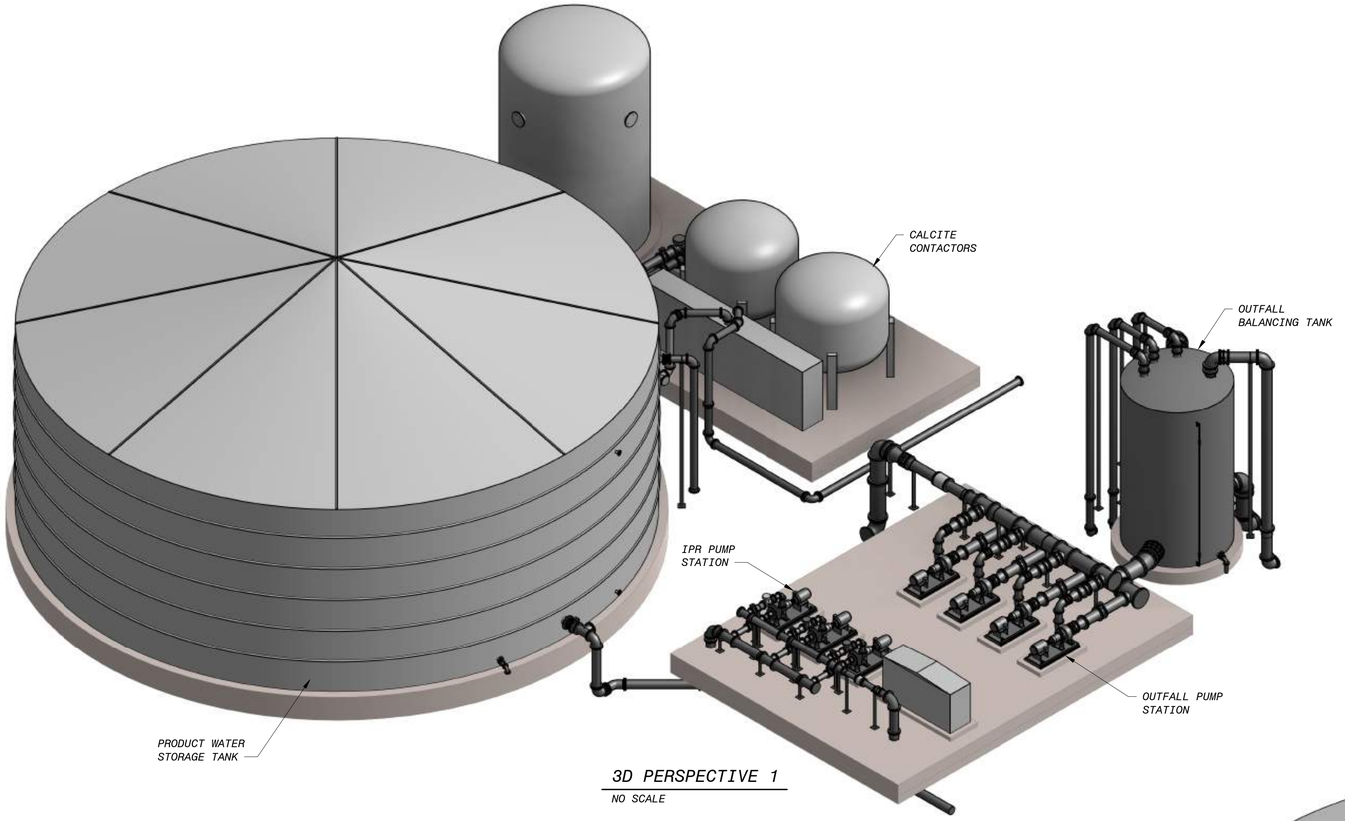

3D PERSPECTIVE 1

NO SCALE

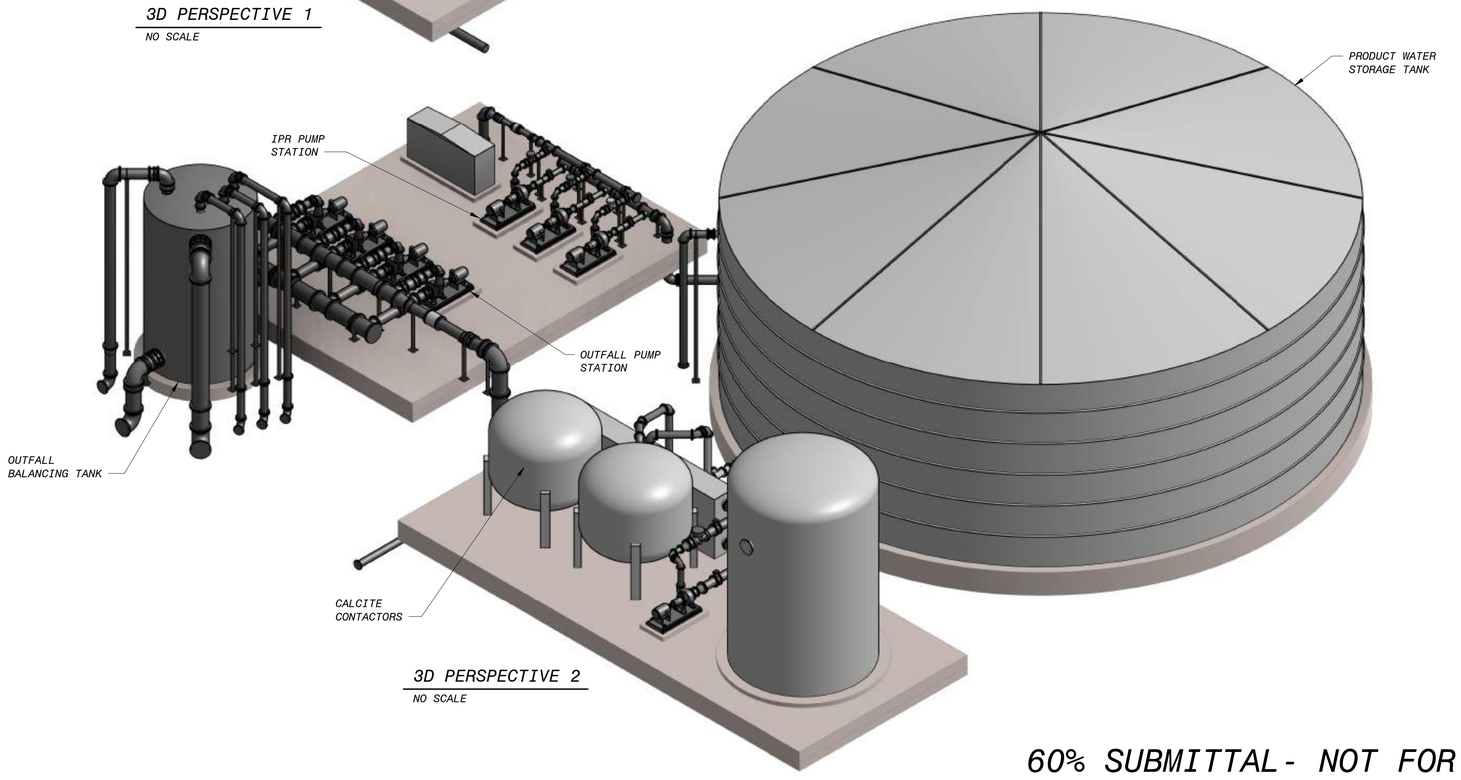

3D PERSPECTIVE 2

NO SCALE

60% SUBMITTAL - NOT FOR CONSTRUCTION

NO.	DATE	REVISIONS AND RECORD OF USE	BY	CHK	APP
B	7/30/2019	60% SUBMITTAL	KEZ	RT	EVB
A	3/5/2019	30% SUBMITTAL	KEZ	RWF	EVB

BLACK & VEATCH

JOINT VENTURE

FILANC

BLACK & VEATCH

CITY OF MORRO BAY
MORRO BAY WATER
RECLAMATION FACILITY (WRF)

PRODUCT WATER AREA - OVERALL
CIVIL-MECHANICAL
3D VIEWS

DESIGNED: KEZ, EVB
DETAILED: MAK
CHECKED:
APPROVED:
DATE:

0 1/2 1

IF THIS BAR DOES NOT MEASURE 1" THEN DRAWING IS NOT TO FULL SCALE

PROJECT NO.
400530

60-M-001

SHEET
OF

PLOTTED: 7/25/2019 10:37:19 AM
D400530

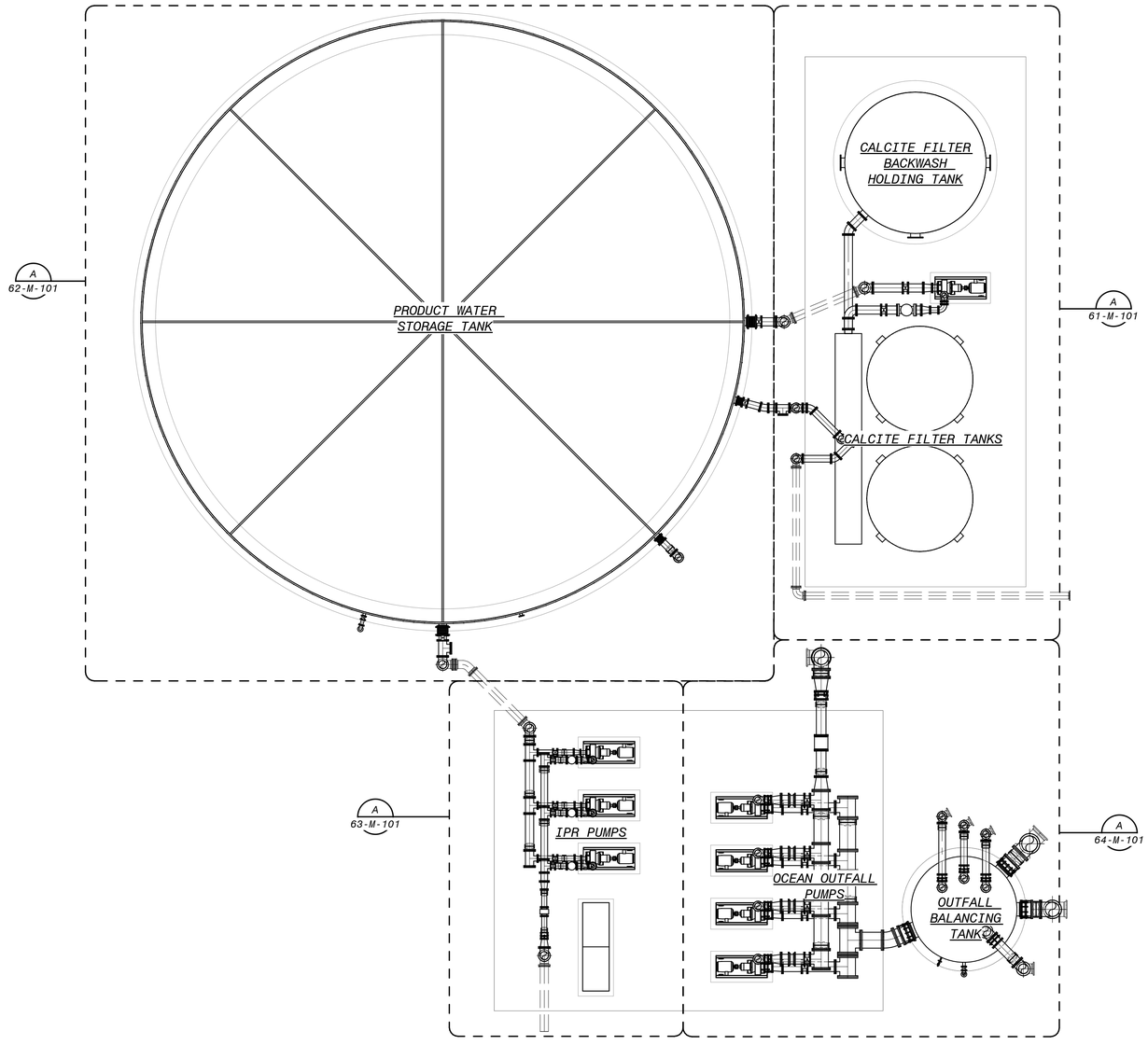

PRODUCT WATER AREA - OVERALL - OPERATING LEVEL PLAN

1/8" = 1'-0"

NOTES:

NO.	BY	CHK	APP	DATE	REVISIONS AND RECORD OF USE
B	KEZ	RT	EVB	7/30/2019	60% SUBMITTAL
A	KEZ	RWF	EVB	3/5/2019	30% SUBMITTAL

BLACK & VEATCH
JOINT VENTURE
FILANC
BLACK & VEATCH

CITY OF MORRO BAY
MORRO BAY WATER
RECLAMATION FACILITY (WRF)

PRODUCT WATER AREA - OVERALL
CIVIL-MECHANICAL
OPERATING LEVEL PLAN

DESIGNED: Designer
DETAILED: Author
CHECKED: Checker
APPROVED: Approver
DATE:

0 1/2 1
IF THIS BAR DOES NOT MEASURE 1" THEN DRAWING IS NOT TO FULL SCALE

PROJECT NO.
400530

60-M-101
SHEET
OF

8' 4' 0' 8' 16'
1/8" = 1'-0"

60% SUBMITTAL - NOT FOR CONSTRUCTION

PLOTTED: 7/25/2019 10:37:22 AM
D400530

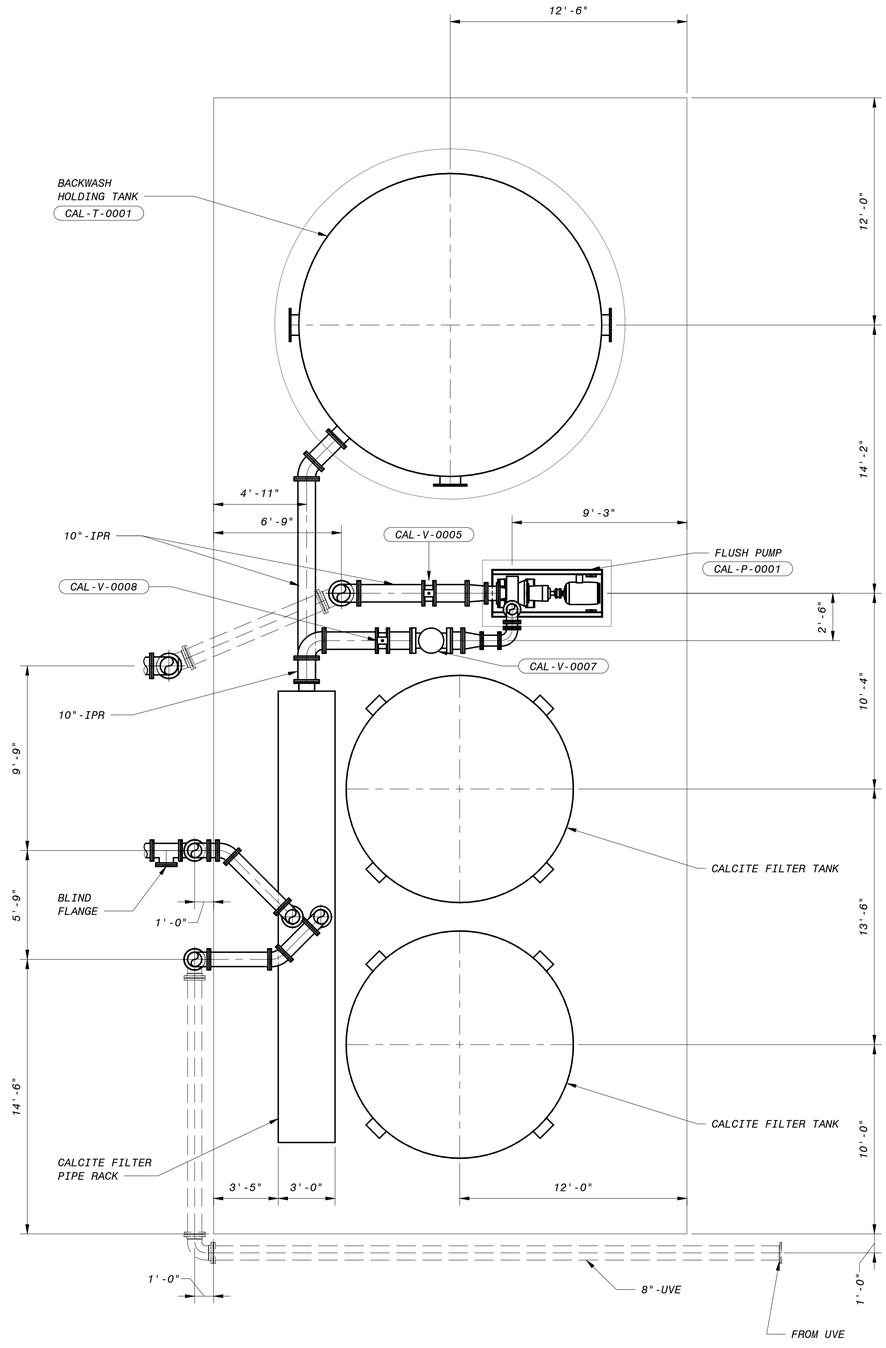

A PRODUCT WATER AREA - CALCITE CONTACTOR - PLAN

60-M-101 1/4" = 1'-0"

NOTES:

1. PIPING CONFIGURATION WITHIN THE CALCITE CONTACTOR SKID WILL BE PROVIDED BY THE CALCITE CONTACTOR MANUFACTURER.

4' 2' 0' 4' 8'

1/4" = 1'-0"

60% SUBMITTAL - NOT FOR CONSTRUCTION

NO.	BY	CHK	APP	DATE	REVISIONS AND RECORD OF USE
B	KEZ	RT	EVB	7/30/2019	60% SUBMITTAL
A	KEZ	RWF	EVB	3/5/2019	30% SUBMITTAL

BLACK & VEATCH JOINT VENTURE

BLACK & VEATCH

FILANC

CITY OF MORRO BAY
MORRO BAY WATER
RECLAMATION FACILITY (WRF)

PRODUCT WATER AREA - CALCITE CONTACTOR
CIVIL-MECHANICAL
PLAN

DESIGNED: KEZ, EVB
DETAILED: MAK
CHECKED:
APPROVED:
DATE:

0 1/2 1

IF THIS BAR DOES NOT MEASURE 1" THEN DRAWING IS NOT TO FULL SCALE

PROJECT NO.
400530

61-M-101
SHEET
OF

PLOTTED: 7/25/2019 10:37:23 AM
D400530

NOTES:

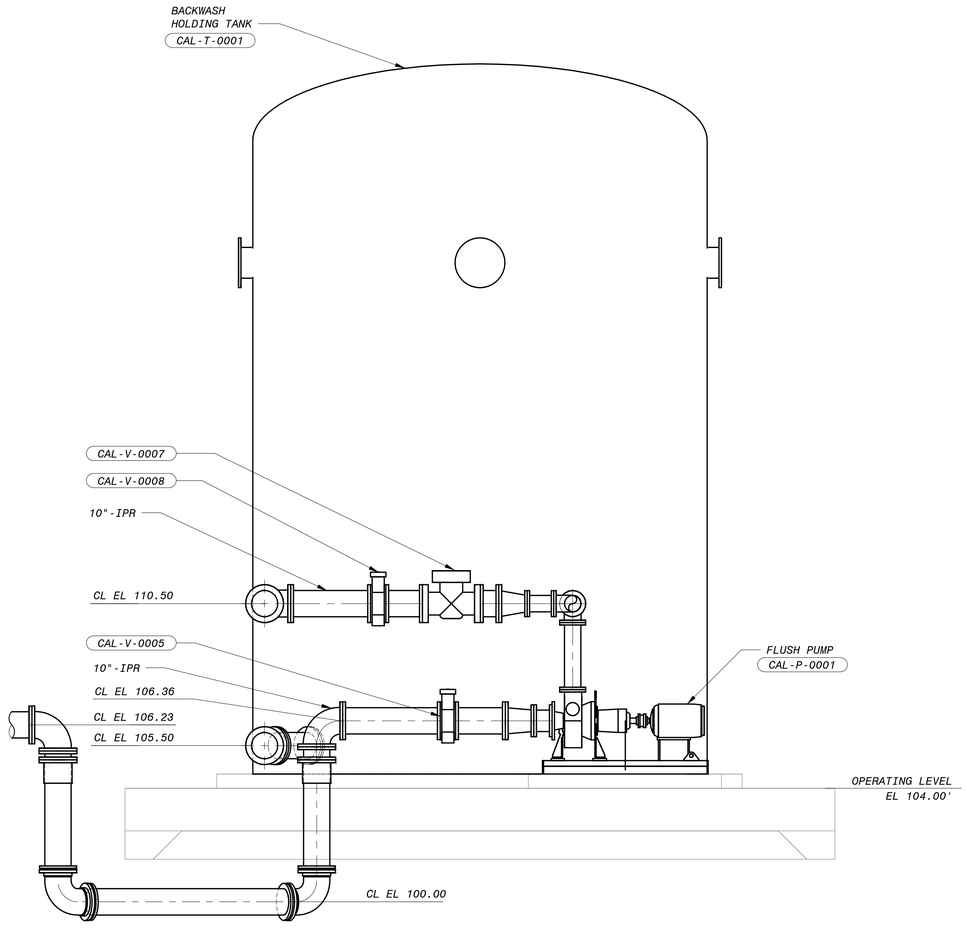

1 SECTION
61-M-101 3/8" = 1'-0"

12" 0' 1' 2' 3' 4' 5' 6' 7'
3/8" = 1'-0"

60% SUBMITTAL- NOT FOR CONSTRUCTION

NO.	BY	CHK	APP	DATE	REVISIONS AND RECORD OF USE
A	KEZ	RWF	EVB	3/5/2019	30% SUBMITTAL

BLACK & VEATCH
JOINT VENTURE
BLACK & VEATCH
FILANC

CITY OF MORRO BAY
MORRO BAY WATER
RECLAMATION FACILITY (WRF)

PRODUCT WATER AREA - CALCITE CONTACTOR
CIVIL-MECHANICAL
SECTIONS AND DETAILS

DESIGNED: KEZ, EVB
DETAILED: MAK
CHECKED:
APPROVED:
DATE:

0 1/2 1
IF THIS BAR DOES NOT MEASURE 1" THEN DRAWING IS NOT TO FULL SCALE

PROJECT NO.
400530

61-M-301
SHEET
OF

PLOTTED: 7/10/2019 4:08:25 PM
D400530

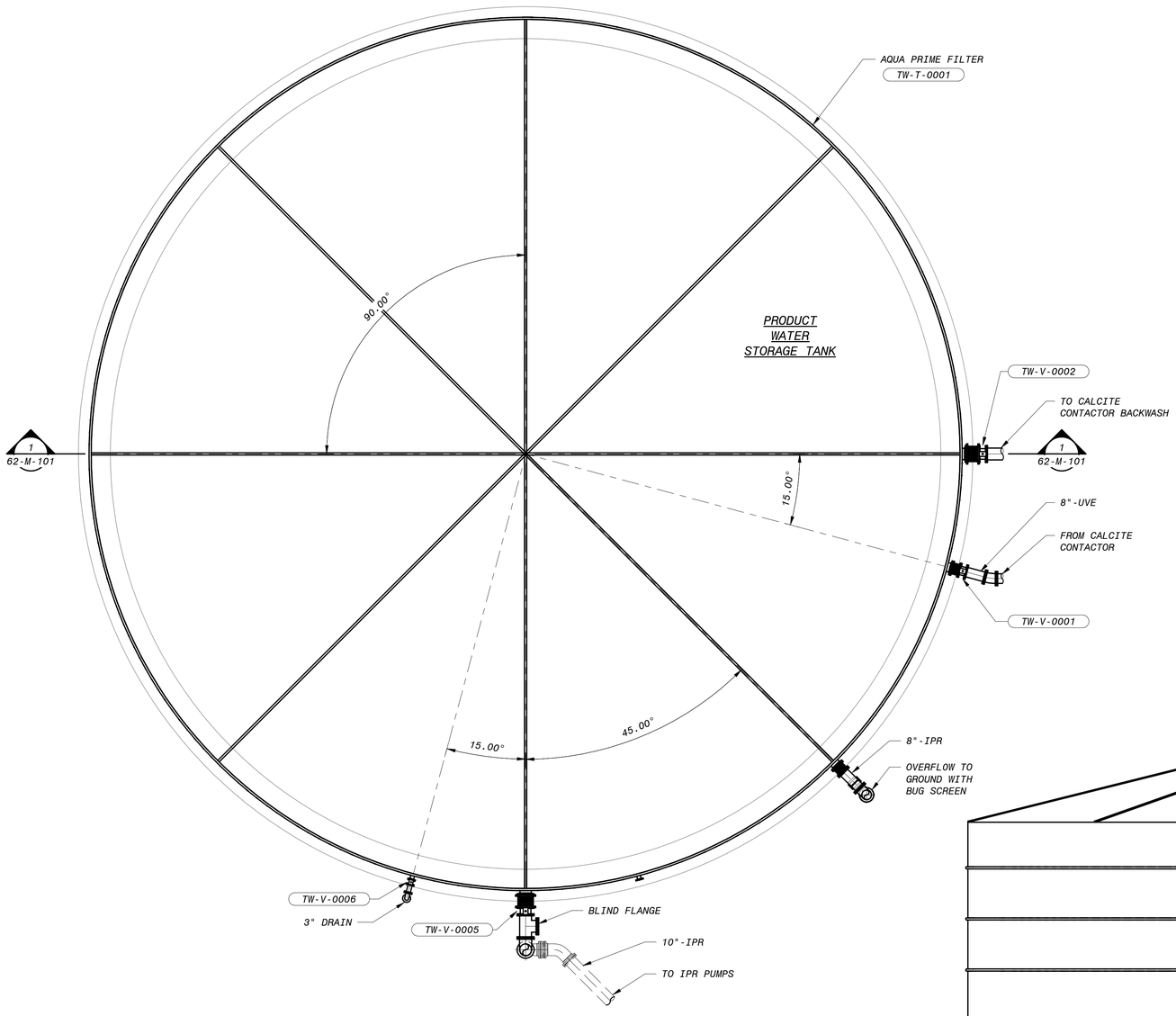

A PRODUCT WATER AREA - PRODUCT WATER STORAGE TANK - PLAN
60-M-101 3/16" = 1'-0"

NOTES:

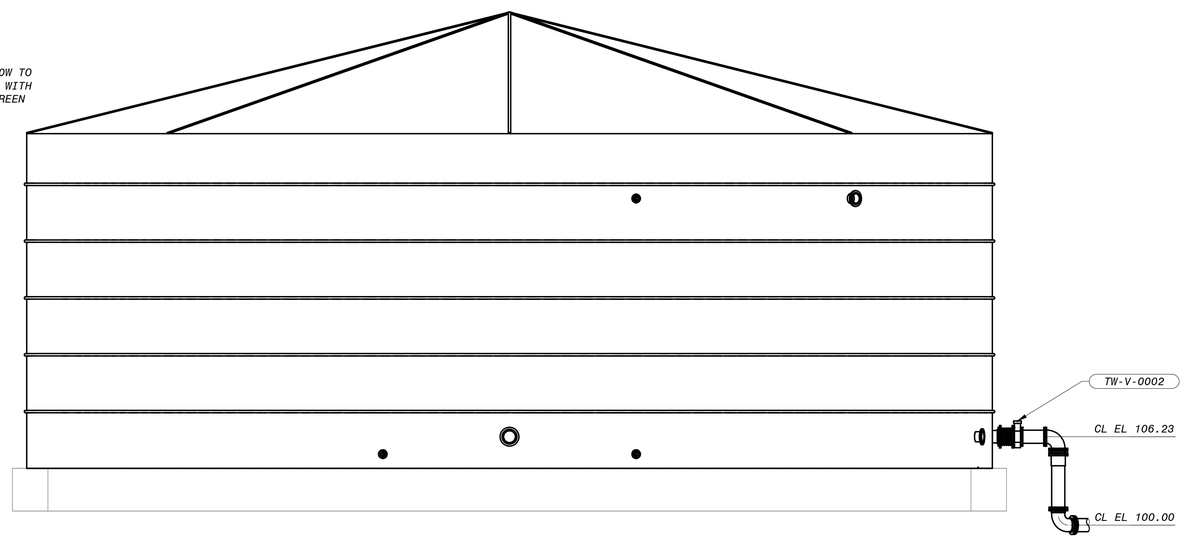

1 SECTION
62-M-101 3/16" = 1'-0"

6" 4' 2' 0' 5' 10'
3/16" = 1'-0"

60% SUBMITTAL - NOT FOR CONSTRUCTION

NO.	BY	CHK	APP	DATE	REVISIONS AND RECORD OF USE
B	KEZ	RT	EVB	7/30/2019	60% SUBMITTAL
A	KEZ	RWF	EVB	3/5/2019	30% SUBMITTAL

BLACK & VEATCH JOINT VENTURE
BLACK & VEATCH
FILANC

CITY OF MORRO BAY
MORRO BAY WATER
RECLAMATION FACILITY (WRF)

PRODUCT WATER AREA
PRODUCT WATER STORAGE TANK
CIVIL-MECHANICAL
PLAN, SECTIONS AND DETAILS

DESIGNED: KEZ, EVB
DETAILED: RMB
CHECKED:
APPROVED:
DATE:

0 1/2 1
IF THIS BAR DOES NOT MEASURE 1" THEN DRAWING IS NOT TO FULL SCALE

PROJECT NO.
400530

62-M-101
SHEET
OF

PLOTTED: 7/25/2019 10:37:24 AM
D400530

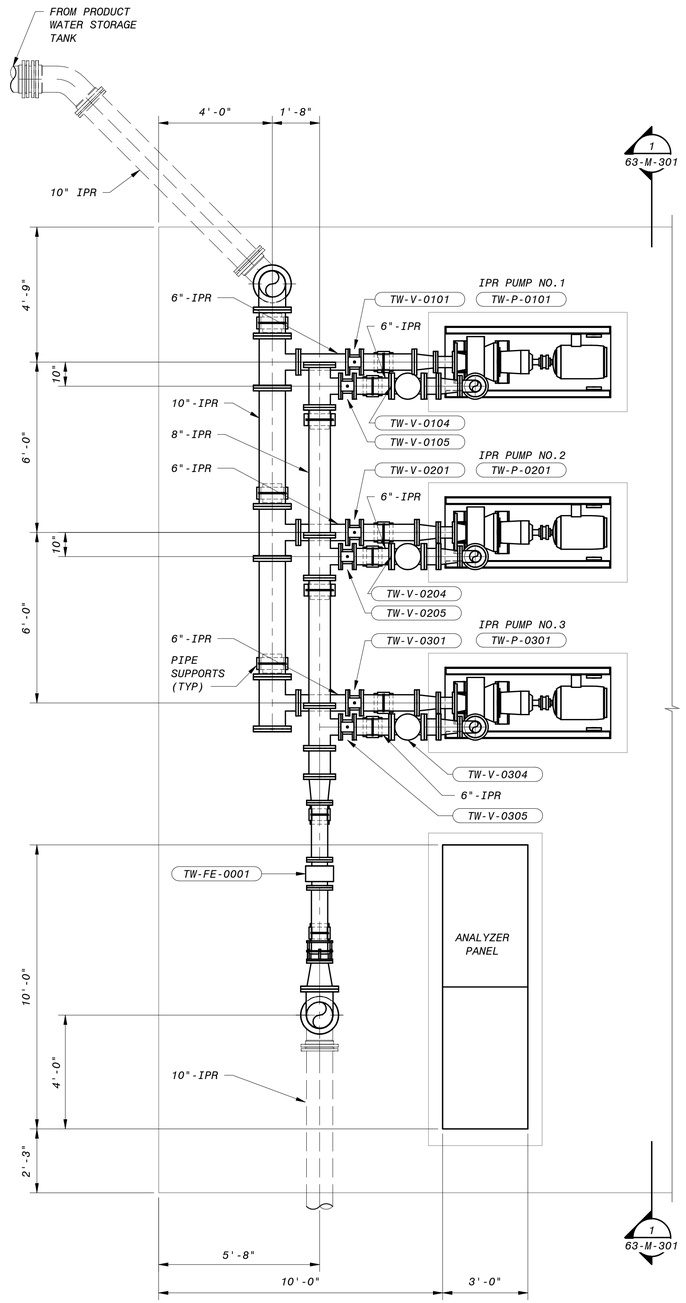

A PRODUCT WATER AREA - IPR PRODUCT WATER PUMP STATION - PLAN

60-M-101 3/8" = 1'-0"

NOTES:

12" 0' 1' 2' 3' 4' 5' 6' 7'

3/8" = 1'-0"

60% SUBMITTAL- NOT FOR CONSTRUCTION

NO.	BY	CHK	APP	DATE	REVISIONS AND RECORD OF USE
B	KEZ	RT	EVB	7/30/2019	60% SUBMITTAL
A	KEZ	RWF	EVB	3/5/2019	30% SUBMITTAL

BLACK & VEATCH JOINT VENTURE

BLACK & VEATCH FILANC

CITY OF MORRO BAY
MORRO BAY WATER RECLAMATION FACILITY (WRF)

PRODUCT WATER AREA
IPR PRODUCT WATER PUMP STATION
CIVIL-MECHANICAL
PLAN

DESIGNED: KEZ, EVB
DETAILED: RMB
CHECKED:
APPROVED:
DATE:

0 1/2 1

IF THIS BAR DOES NOT MEASURE 1" THEN DRAWING IS NOT TO FULL SCALE

PROJECT NO. 400530

63-M-101 SHEET OF

PLOTTED: 7/25/2019 10:37:25 AM
D400530

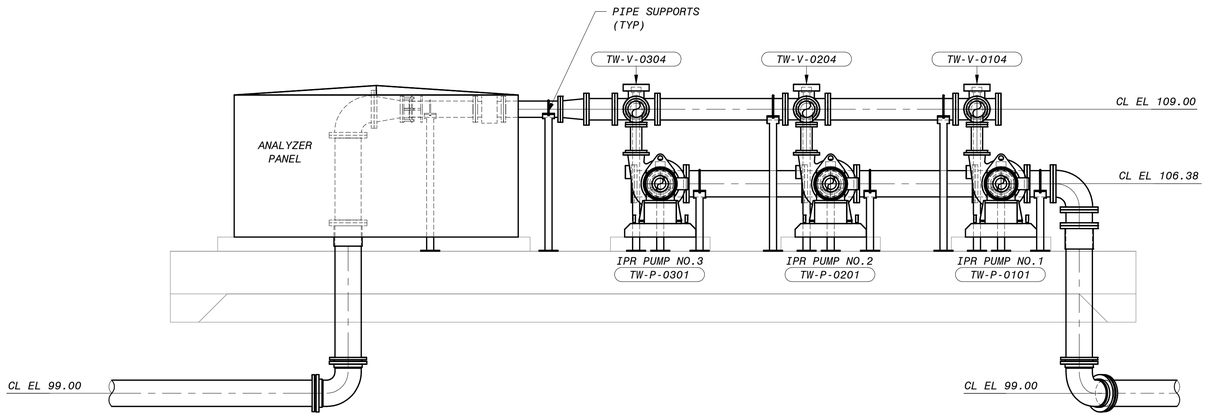

1 SECTION
63-M-101 3/8" = 1'-0"

12" 0' 1' 2' 3' 4' 5' 6' 7'
3/8" = 1'-0"

60% SUBMITTAL- NOT FOR CONSTRUCTION

NO.	BY	CHK	APP	DATE	REVISIONS AND RECORD OF USE
B	KEZ	RT	EVB	7/30/2019	60% SUBMITTAL
A	KEZ	RWF	EVB	3/5/2019	30% SUBMITTAL

BLACK & VEATCH
JOINT VENTURE
FILANC
BLACK & VEATCH

CITY OF MORRO BAY
MORRO BAY WATER
RECLAMATION FACILITY (WRF)

PRODUCT WATER AREA
IPR PRODUCT WATER PUMP STATION
CIVIL-MECHANICAL
SECTIONS AND DETAILS 1

DESIGNED: KEZ, EVB
DETAILED: RMB
CHECKED:
APPROVED:
DATE:

0 1/2 1
IF THIS BAR DOES NOT MEASURE 1" THEN DRAWING IS NOT TO FULL SCALE

PROJECT NO.
400530

63-M-301
SHEET
OF

PLOTTED: 7/25/2019 10:37:26 AM
D400530

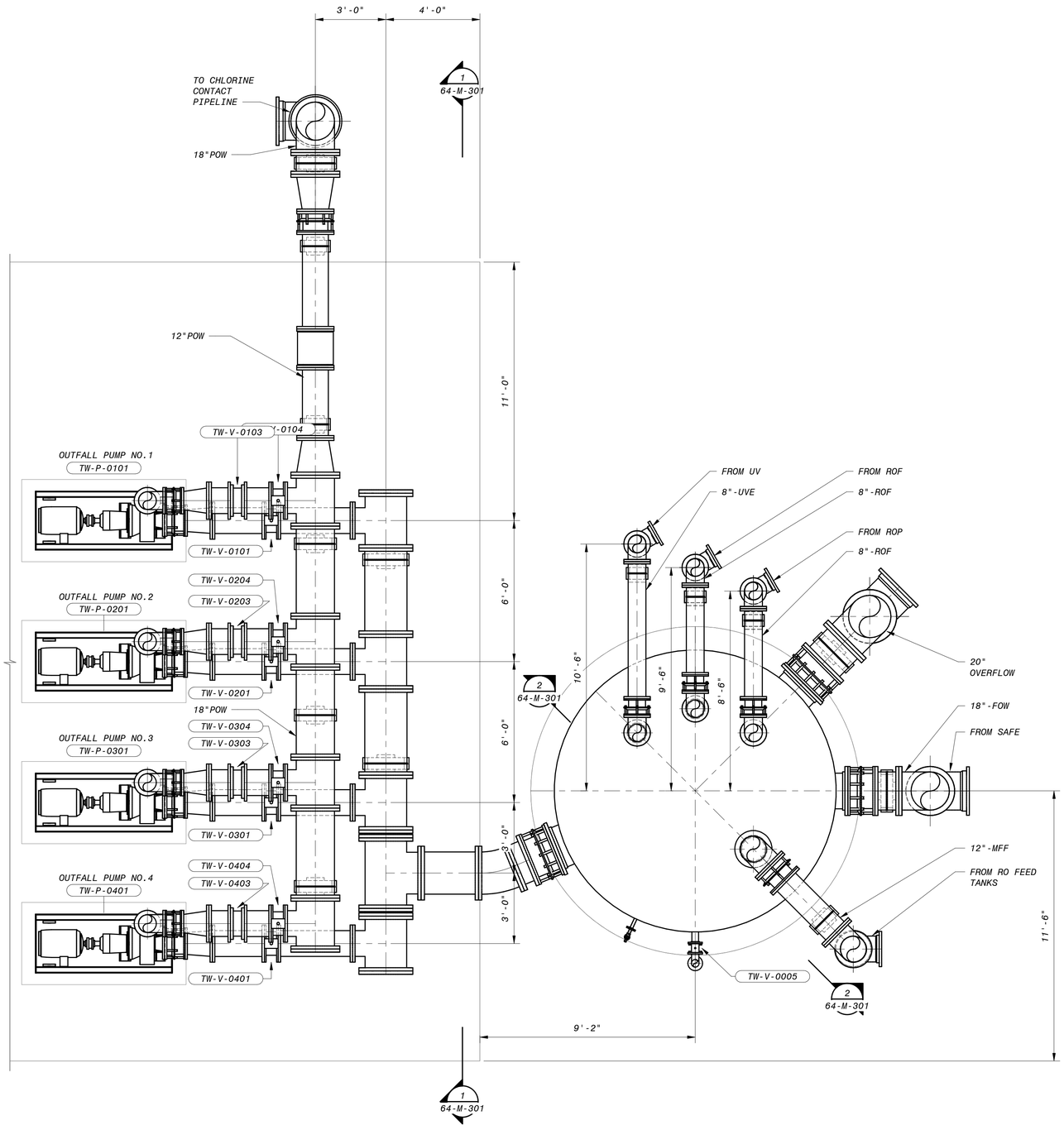

PRODUCT WATER AREA - OUTFALL PUMP STATION - PLAN

3/8" = 1'-0"

NOTES:

NO.	BY	CHK	APP	DATE	REVISIONS AND RECORD OF USE
B	KEZ	RT	EVB	7/30/2019	60% SUBMITTAL
A	KEZ	RWF	EVB	3/5/2019	30% SUBMITTAL

BLACK & VEATCH

JOINT VENTURE

FILANC

BLACK & VEATCH

CITY OF MORRO BAY
MORRO BAY WATER
RECLAMATION FACILITY (WRF)

PRODUCT WATER AREA - OUTFALL PUMP STATION
CIVIL-MECHANICAL
PLAN

DESIGNED: KEZ, EVB
DETAILED: RMB
CHECKED:
APPROVED:
DATE:

0 1/2 1
IF THIS BAR DOES NOT MEASURE 1" THEN DRAWING IS NOT TO FULL SCALE

PROJECT NO.
400530

64-M-101
SHEET
OF

12" 0' 1' 2' 3' 4' 5' 6' 7'
3/8" = 1'-0"

60% SUBMITTAL- NOT FOR CONSTRUCTION

PLOTTED: 7/25/2019 10:37:29 AM
D400530

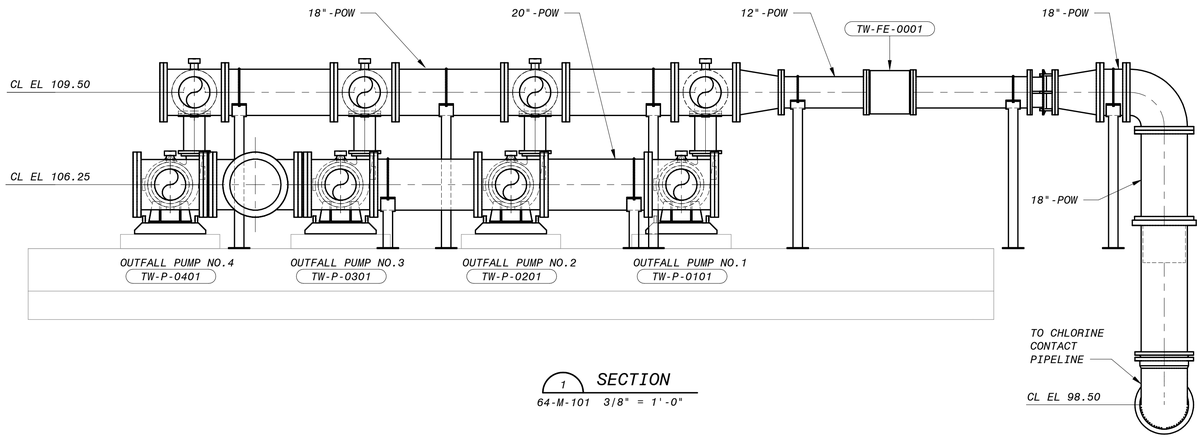

1 SECTION
64-M-101 3/8" = 1'-0"

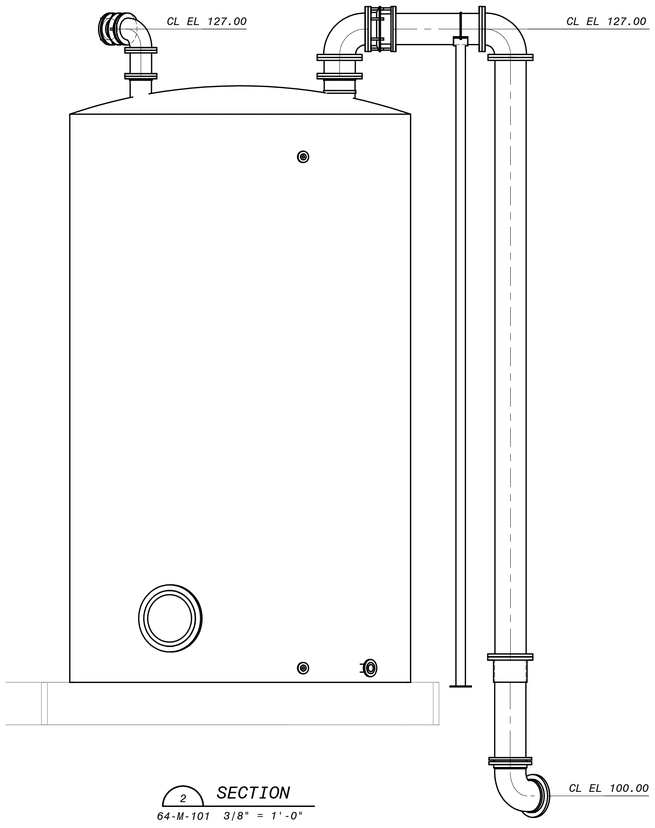

2 SECTION
64-M-101 3/8" = 1'-0"

12" 0' 1' 2' 3' 4' 5' 6' 7'
3/8" = 1'-0"

60% SUBMITTAL- NOT FOR CONSTRUCTION

NO.	BY	CHK	APP	DATE	REVISIONS AND RECORD OF USE
B	KEZ	RT	EVB	7/30/2019	60% SUBMITTAL
A	KEZ	RWF	EVB	3/5/2019	30% SUBMITTAL

BLACK & VEATCH
JOINT VENTURE
BLACK & VEATCH
FILANC

CITY OF MORRO BAY
MORRO BAY WATER
RECLAMATION FACILITY (WRF)

PRODUCT WATER AREA - OUTFALL PUMP STATION
CIVIL-MECHANICAL
SECTIONS AND DETAILS 1

DESIGNED: KEZ, EVB
DETAILED: RMB
CHECKED:
APPROVED:
DATE:

0 1/2 1
IF THIS BAR DOES NOT MEASURE 1" THEN DRAWING IS NOT TO FULL SCALE

PROJECT NO.
400530

64-M-301
SHEET
OF

PLOTTED: 7/25/2019 10:37:30 AM
D400530

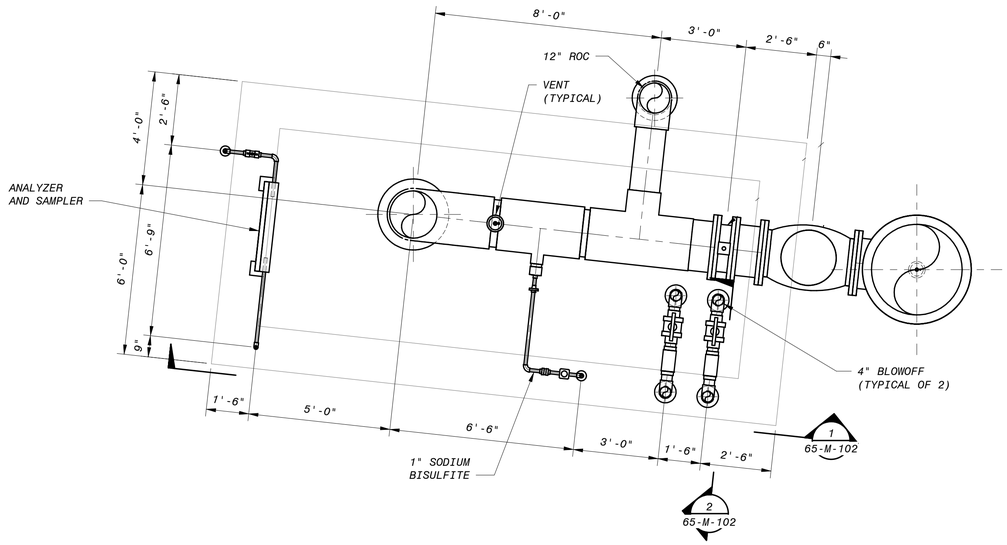

PRODUCT WATER AREA - DECHLORINATION FACILITY - PLAN

3/8" = 1'-0"

NOTES:

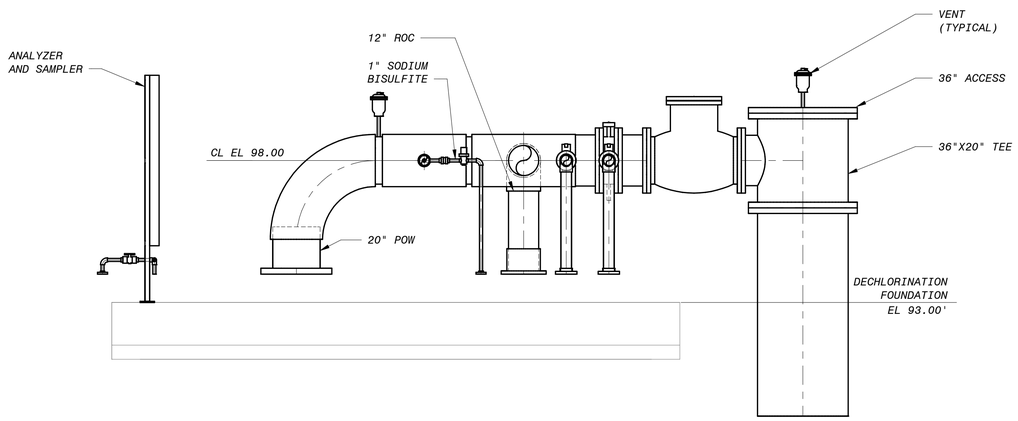

1 SECTION

65-M-102 3/8" = 1'-0"

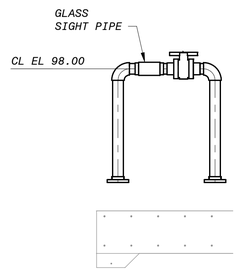

2 BLOW OFF STATION SECTION

65-M-102 3/8" = 1'-0"

12" 0' 1' 2' 3' 4' 5' 6' 7'

3/8" = 1'-0"

60% SUBMITTAL- NOT FOR CONSTRUCTION

NO.	BY	CHK	APP	DATE	REVISIONS AND RECORD OF USE

BLACK & VEATCH

JOINT VENTURE

BLACK & VEATCH

FILANC

CITY OF MORRO BAY
MORRO BAY WATER
RECLAMATION FACILITY (WRF)

PRODUCT WATER AREA
DECHLORINATION FACILITY
CIVIL-MECHANICAL
PLAN, SECTIONS AND DETAILS

DESIGNED: KEZ, EVB
DETAILED: RMB
CHECKED: Checker
APPROVED: Approver
DATE:

0 1/2 1

IF THIS BAR DOES NOT MEASURE 1" THEN DRAWING IS NOT TO FULL SCALE

PROJECT NO.
400530

65-M-102
SHEET
OF

PLOTTED: 7/29/2019 2:47:13 PM

D400530

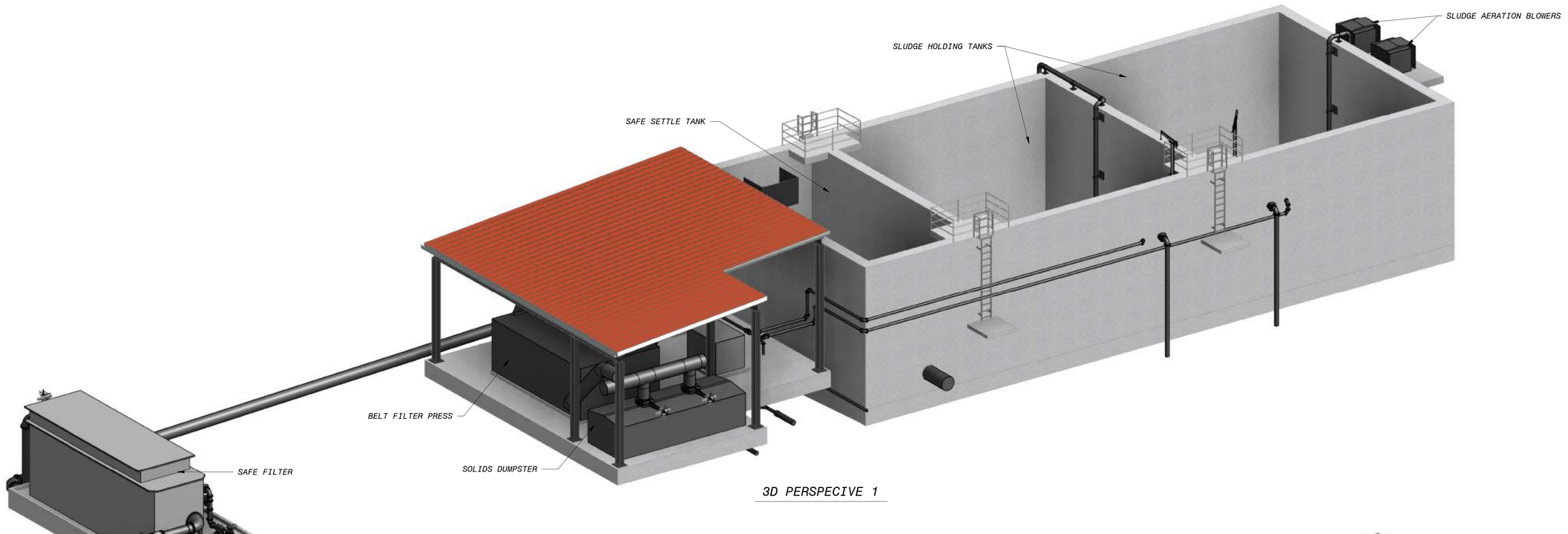

3D PERSPECIVE 1

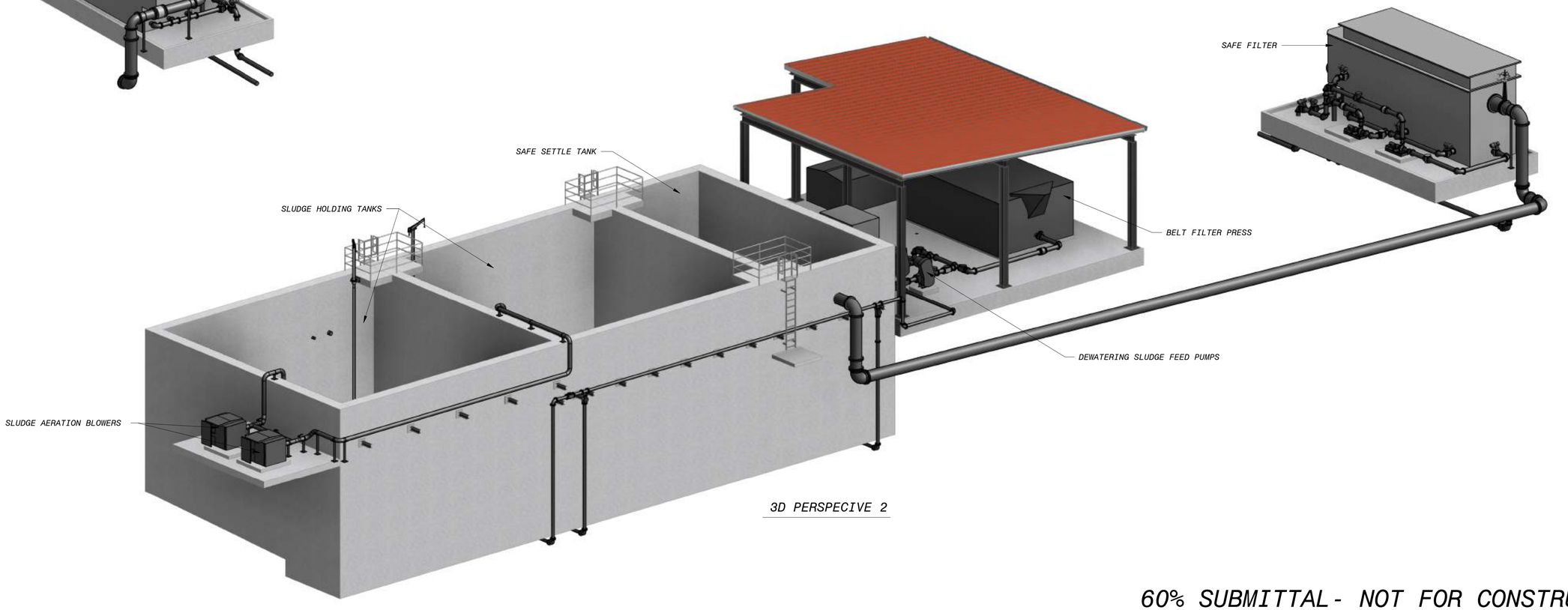

3D PERSPECIVE 2

60% SUBMITTAL- NOT FOR CONSTRUCTION

NO.	BY	CHK	APP	DATE	REVISIONS AND RECORD OF USE
B	KEZ	RT	EVB	7/30/2019	60% SUBMITTAL
A	KEZ	RWF	EVB	3/5/2019	30% SUBMITTAL

BLACK & VEATCH

JOINT VENTURE

FILANC

BLACK & VEATCH

CITY OF MORRO BAY
MORRO BAY WATER
RECLAMATION FACILITY (WRF)

RESIDUALS AREA - OVERALL
CIVIL - MECHANICAL
3D VIEWS

DESIGNED: KEZ
DETAILED: MAK
CHECKED:
APPROVED:
DATE:

0 1/2 1
IF THIS BAR DOES NOT MEASURE 1" THEN DRAWING IS NOT TO FULL SCALE

PROJECT NO.
400530

70-M-001
SHEET
OF

PLOTTED: 26-07-2019 14:28:02
D400530

MATCHLINE - SEE CONTINUATION LINE ON 72-M-101

TO SAFE FILTER

18"-FIW

2 71-M-301

3 71-M-301

4" AWS

3'-3"

9"

4"-DRN

2'-0"

2'-0"

6'-9"

4" AWS

PLUG VALVES ON VERTICAL LEGS UP FOR ISOLATION

WAS-V-0102

WAS-V-0202

1'-0"

6" AA (ABOVE)

PIPE SUPPORT (TYP)

4" AWS

4" AWS

2'-0"

2'-0"

2'-0"

2'-0"

13'-6"

13'-6"

11"

9"

6" AA

6" AA

1'-0"

6'-8 1/256"

SLUDGE HOLDING TANK BLOWER NO.1

AIR-BL-0101

AIR-V-0001

AIR-V-0106

AIR-V-0003

6" AA

AIR-V-0206

AIR-V-0002

9"

1'-0"

COARSE BUBBLE DIFFUSER DROP LEG

5'-8"

8'-8"

5'-8"

AIR-BL-0201

SLUDGE HOLDING TANK BLOWER NO.2

1 71-M-301

42'-6"

SAFE SETTLE TANK

SLUDGE HOLDING TANK NO.1

SLUDGE HOLDING TANK NO.2

17'-6"

38'-10"

38'-10"

9'-2"

37'-2"

25'-0"

MIXER WAS-MXR-0101

MIXER WAS-MXR-0002

3'-0"

3'-0"

1'-0"

1'-0"

2'-0"

2'-0"

8"

3" WAS (STACKED) EXPOSED ADJECENT TO TANK

6"-FBW

3" WAS

6"-FBW

OPERATING FLOOR PLAN

1/4" = 1'-0"

NOTES:

NO.	BY	CHK	APP	DATE	REVISIONS AND RECORD OF USE
B	KEZ	RT	EVB	7/30/2019	60% SUBMITTAL
A	KEZ	RWF	EVB	3/5/2019	30% SUBMITTAL

BLACK & VEATCH JOINT VENTURE

BLACK & VEATCH

FILANC

CITY OF MORRO BAY
MORRO BAY WATER RECLAMATION FACILITY (WRF)

RESIDUALS AREA - SLUDGE HOLDING TANKS AND SAFE SETTLE TANKS CIVIL - MECHANICAL OPERATING LEVEL PLAN

DESIGNED: KEZ
DETAILED: MAK
CHECKED:
APPROVED:
DATE:

0 1/2 1

IF THIS BAR DOES NOT MEASURE 1" THEN DRAWING IS NOT TO FULL SCALE

PROJECT NO. 400530

71-M-101

SHEET OF

PLOTTED: 26-07-2019 14:28:04

D400530

60% SUBMITTAL- NOT FOR CONSTRUCTION

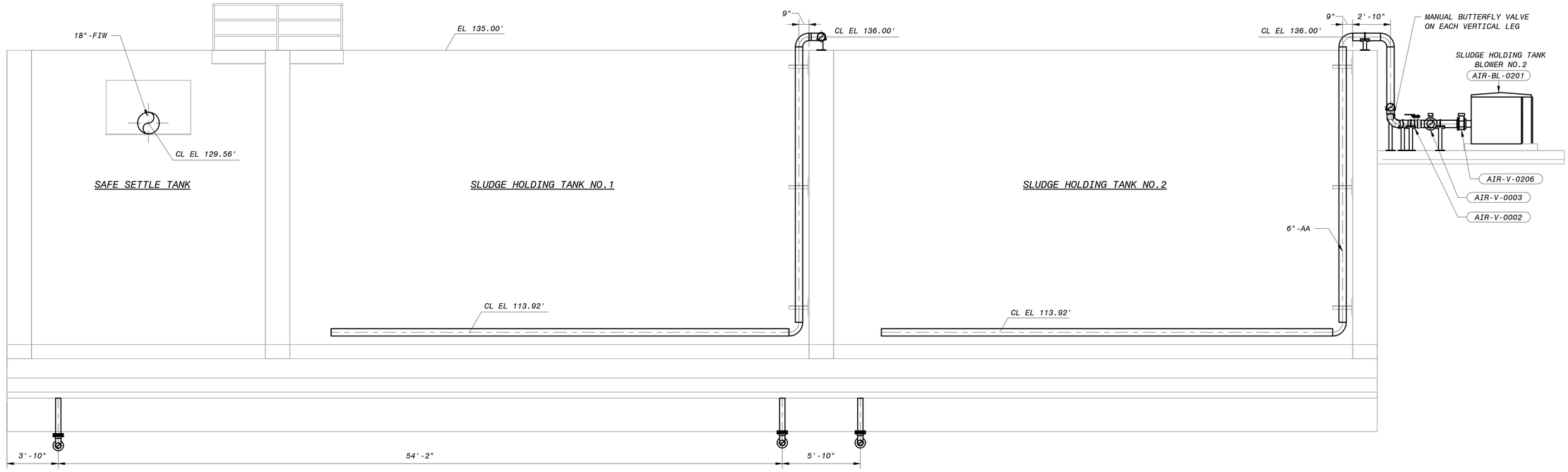

1 SECTION
71-M-101 1/4" = 1'-0"

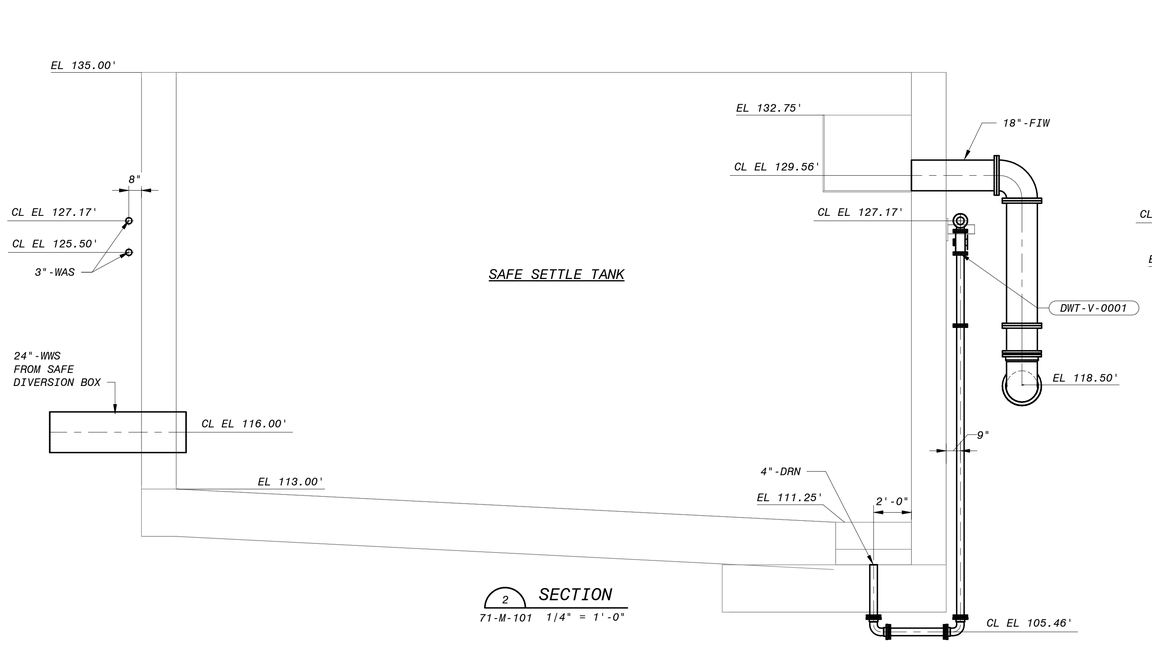

2 SECTION
71-M-101 1/4" = 1'-0"

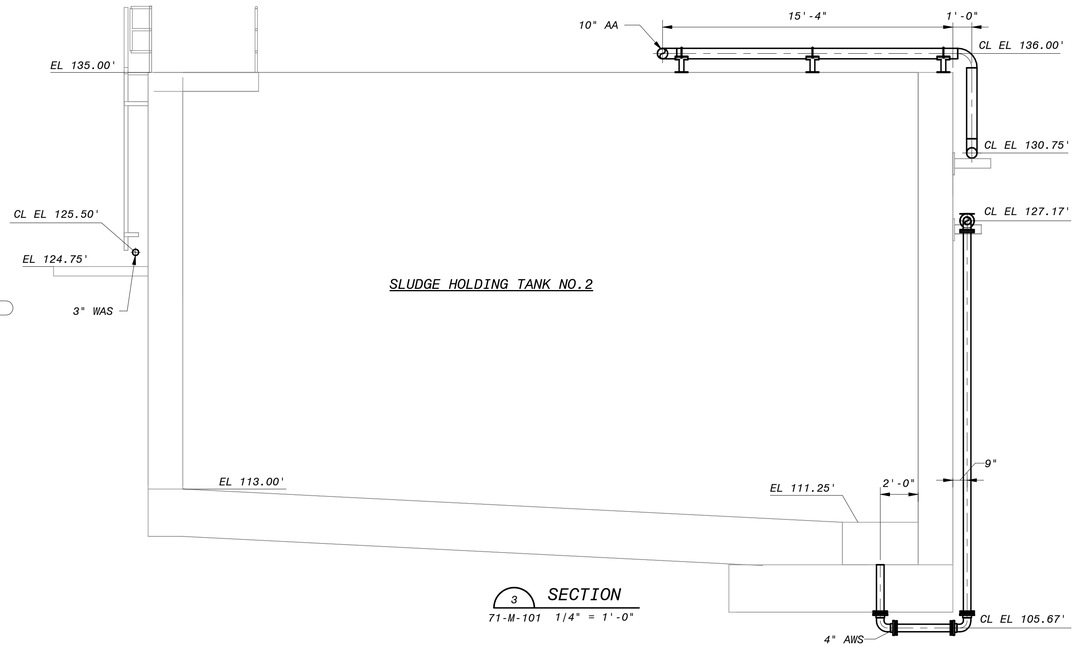

3 SECTION
71-M-101 1/4" = 1'-0"

4' 2' 0' 4' 8'
1/4" = 1'-0"

60% SUBMITTAL- NOT FOR CONSTRUCTION

NO.	BY	CHK	APP	DATE	REVISIONS AND RECORD OF USE
B	KEZ	RT	EVB	7/30/2019	60% SUBMITTAL
A	KEZ	RWF	EVB	3/5/2019	30% SUBMITTAL

BLACK & VEATCH
JOINT VENTURE
FILANC
BLACK&VEATCH

CITY OF MORRO BAY
MORRO BAY WATER
RECLAMATION FACILITY (WRF)

RESIDUALS AREA - SLUDGE HOLDING TANKS AND
SAFE SETTLE TANKS
CIVIL – MECHANICAL
SECTIONS & DETAILS 1

DESIGNED: KEZ
DETAILED: MAK
CHECKED:
APPROVED:
DATE:

0 1/2 1
IF THIS BAR DOES NOT MEASURE 1" THEN DRAWING IS NOT TO FULL SCALE

PROJECT NO.
400530

71-M-301
SHEET
OF

PLOTTED: 26-07-2019 14:28:07
D400530

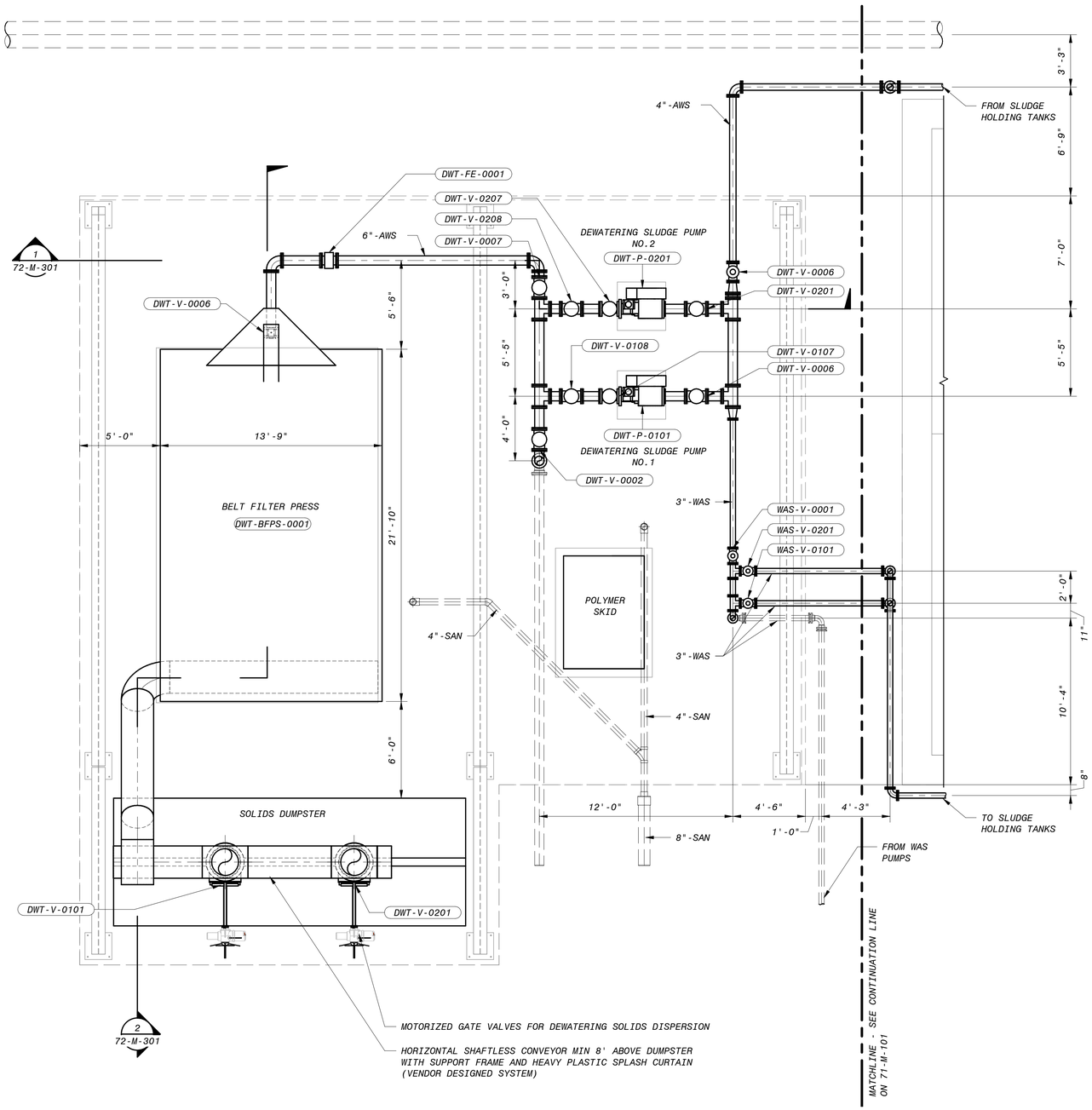

OPERATING FLOOR PLAN

1/4" = 1'-0"

NOTES:

4' 2' 0' 4' 8'

1/4" = 1'-0"

60% SUBMITTAL- NOT FOR CONSTRUCTION

NO.	BY	CHK	APP	DATE	REVISIONS AND RECORD OF USE
B	KEZ	RT	EVB	7/30/2019	60% SUBMITTAL
A	KEZ	RWF	EVB	3/5/2019	30% SUBMITTAL

BLACK & VEATCH

JOINT VENTURE

FILANC

BLACK&VEATCH

CITY OF MORRO BAY
MORRO BAY WATER
RECLAMATION FACILITY (WRF)

RESIDUALS AREA - DEWATERING FACILITY
CIVIL - MECHANICAL
PLAN

DESIGNED: KEZ
DETAILED: MAK
CHECKED:
APPROVED:
DATE:

0 1/2 1
IF THIS BAR DOES NOT MEASURE 1" THEN DRAWING IS NOT TO FULL SCALE

PROJECT NO.
400530

72-M-101
SHEET
OF

PLOTTED: 26-07-2019 14:28:09
D400530

NOTES:

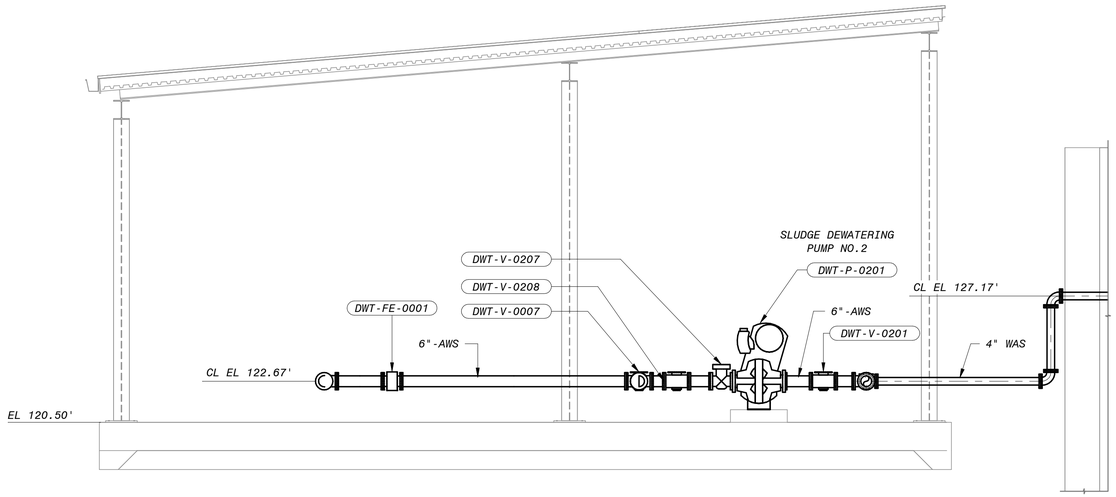

1 SECTION
72-M-101 1/4" = 1'-0"

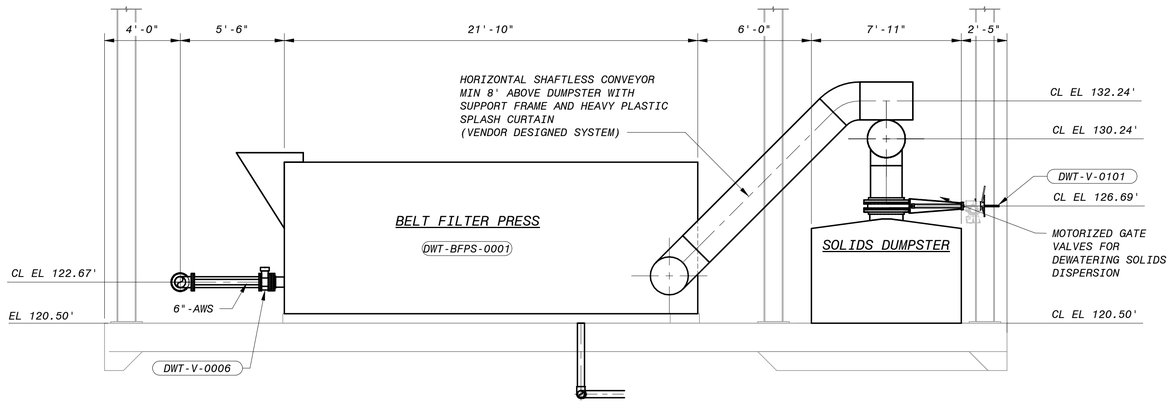

2 SECTION
72-M-101 1/4" = 1'-0"

4' 2' 0' 4' 8'
1/4" = 1'-0"

60% SUBMITTAL - NOT FOR CONSTRUCTION

NO.	BY	CHK	APP	DATE	REVISIONS AND RECORD OF USE
B	KEZ	RT	EVB	7/30/2019	60% SUBMITTAL
A	KEZ	RWF	EVB	3/5/2019	30% SUBMITTAL

BLACK & VEATCH
JOINT VENTURE
FILANC
BLACK & VEATCH

CITY OF MORRO BAY
MORRO BAY WATER
RECLAMATION FACILITY (WRF)

RESIDUALS AREA - DEWATERING FACILITY
CIVIL - MECHANICAL
SECTIONS & DETAILS 1

DESIGNED: KEZ
DETAILED: MAK
CHECKED:
APPROVED:
DATE:

0 1/2 1
IF THIS BAR DOES NOT MEASURE 1" THEN DRAWING IS NOT TO FULL SCALE

PROJECT NO.
400530

72-M-301
SHEET
OF

PLOTTED: 26-07-2019 14:28:11
D400530

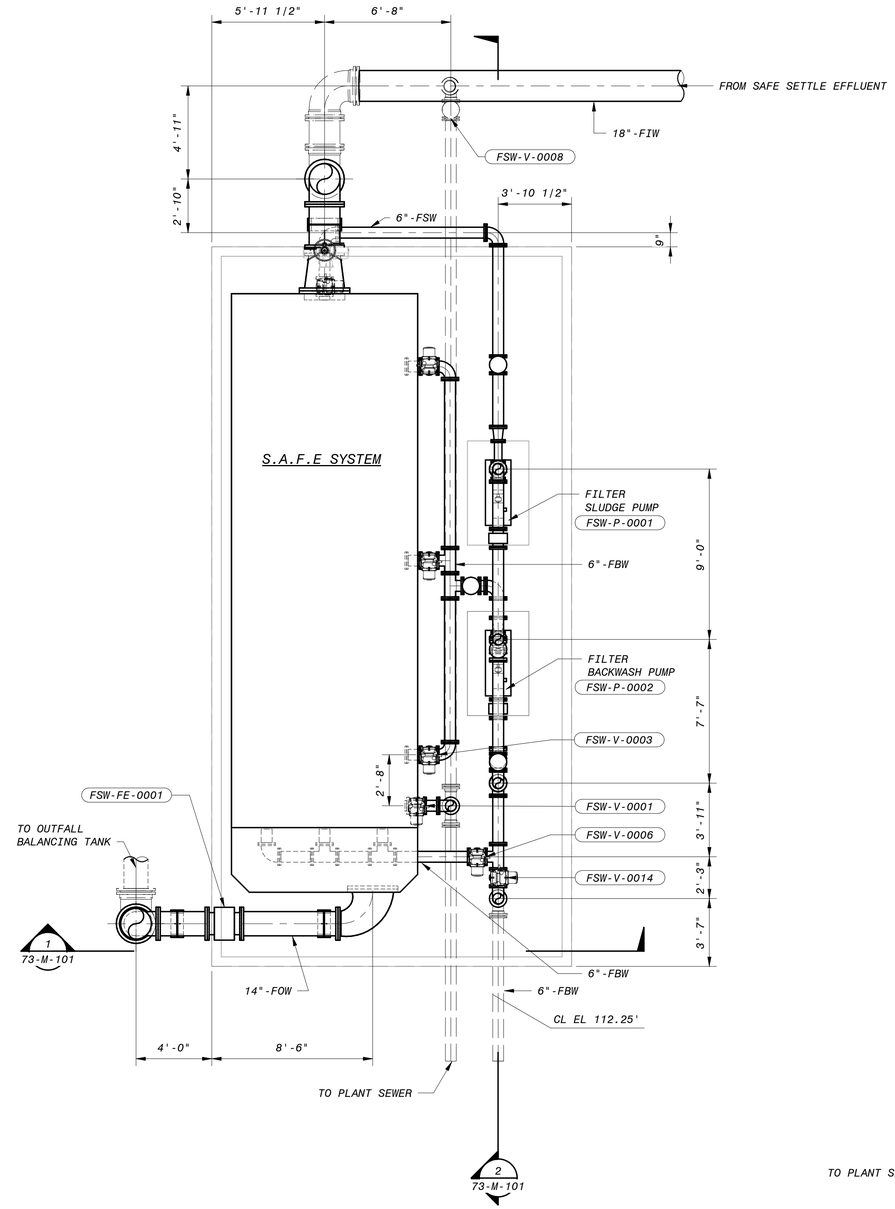

OPERATING FLOOR PLAN

1/4" = 1'-0"

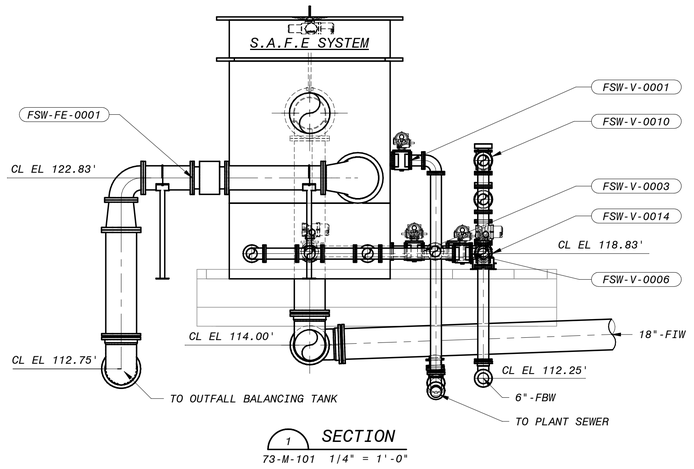

1 SECTION

73-M-101 1/4" = 1'-0"

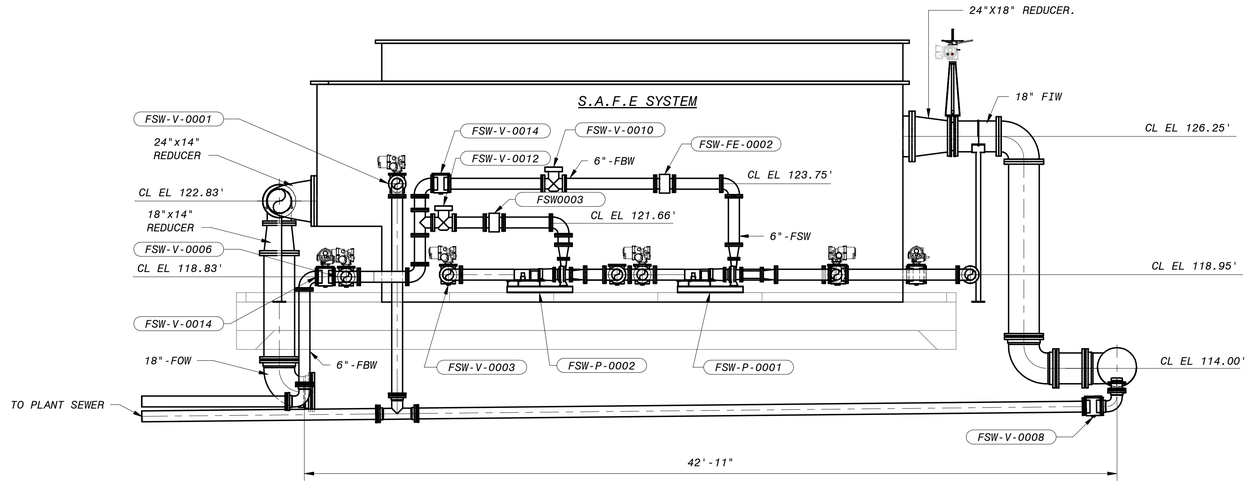

2 SECTION

73-M-101 1/4" = 1'-0"

NOTES:

4' 2' 0' 4' 8'

1/4" = 1'-0"

60% SUBMITTAL- NOT FOR CONSTRUCTION

NO.	BY	CHK	APP	DATE	REVISIONS AND RECORD OF USE
B	KEZ	RT	EVB	7/30/2019	60% SUBMITTAL
A	KEZ	RWF	EVB	3/5/2019	30% SUBMITTAL

BLACK & VEATCH JOINT VENTURE

BLACK & VEATCH

FILANC

CITY OF MORRO BAY
MORRO BAY WATER RECLAMATION FACILITY (WRF)

RESIDUALS AREA - SAFE FILTER SYSTEM
CIVIL - MECHANICAL
PLAN, SECTIONS AND DETAILS

DESIGNED: KEZ
DETAILED: MAK
CHECKED:
APPROVED:
DATE:

0 1/2 1

IF THIS BAR DOES NOT MEASURE 1" THEN DRAWING IS NOT TO FULL SCALE

PROJECT NO. 400530

73-M-101
SHEET
OF

PLOTTED: 26-07-2019 14:28:16
D400530

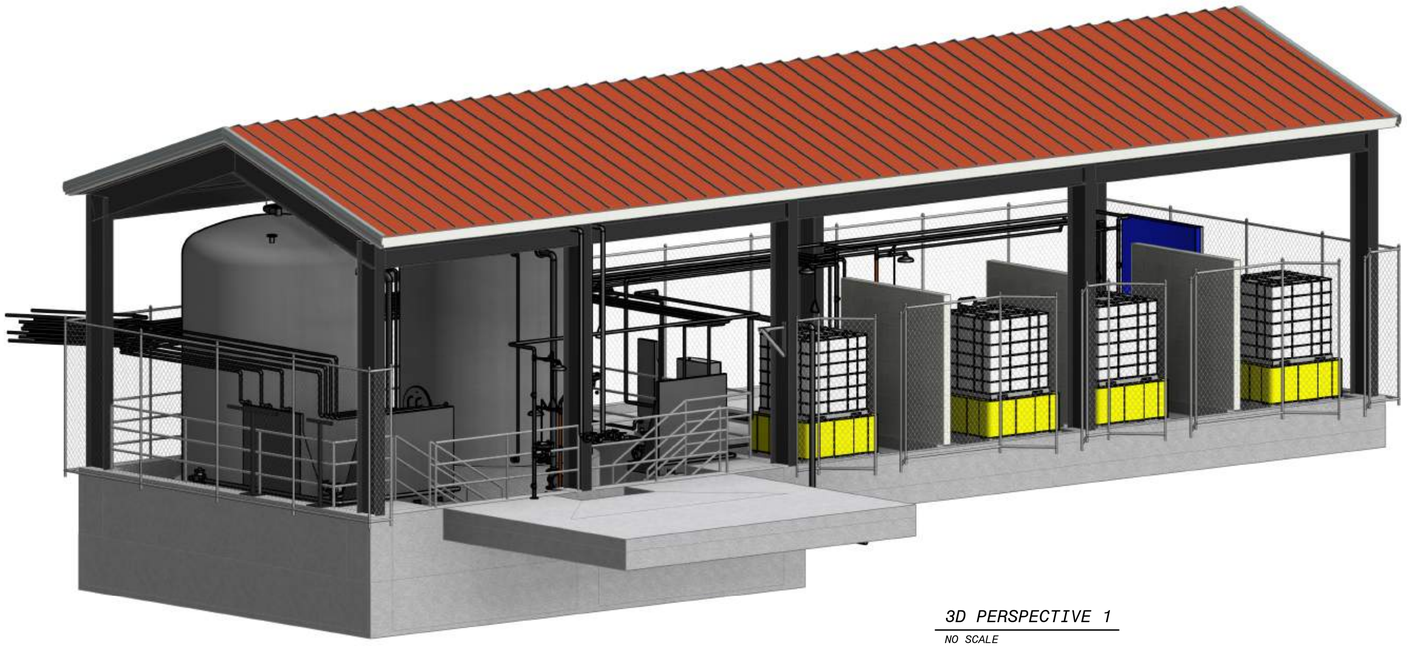

3D PERSPECTIVE 1

NO SCALE

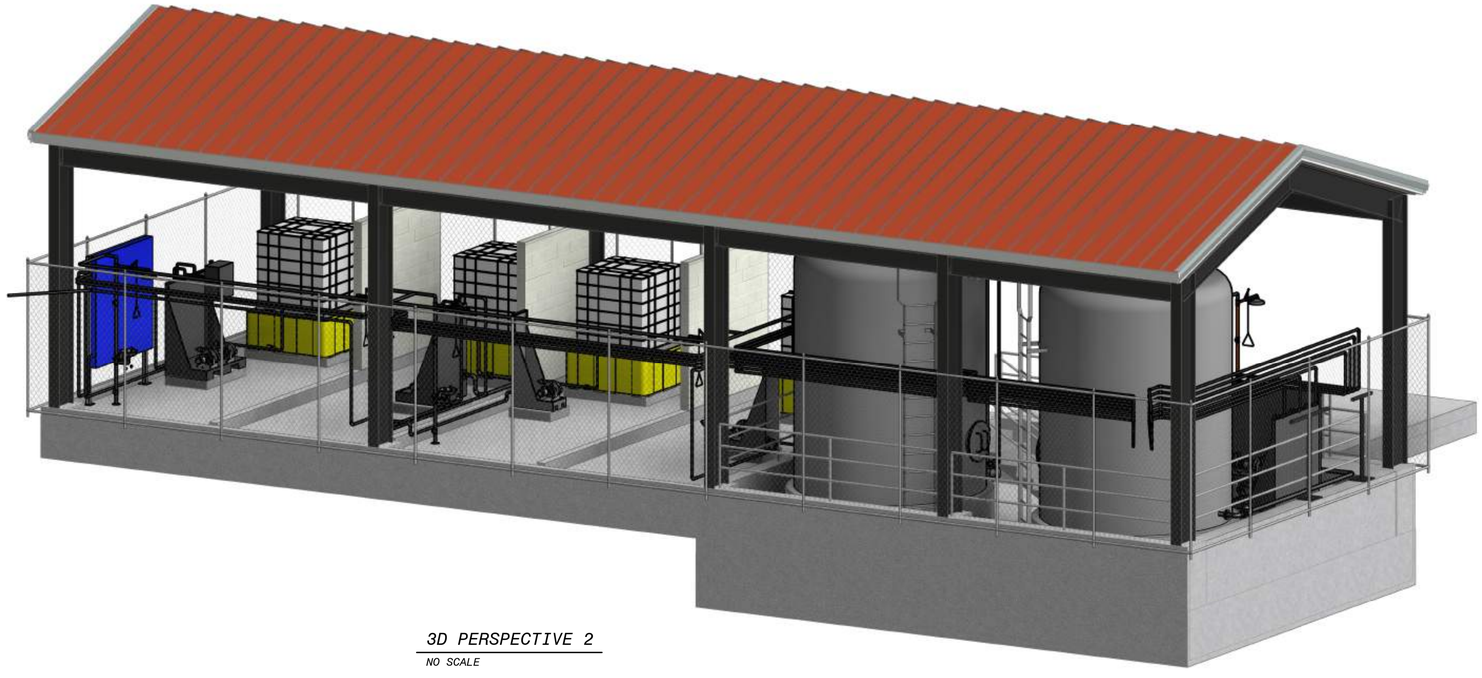

3D PERSPECTIVE 2

NO SCALE

60% SUBMITTAL - NOT FOR CONSTRUCTION

NO.	BY	CHK	APP	DATE	REVISIONS AND RECORD OF USE
B	ADV	RWF	EVB	7/30/2019	60% SUBMITTAL
A	ADV	RWF	EVB	3/5/2019	30% SUBMITTAL

BLACK & VEATCH

JOINT VENTURE

FILANC

BLACK & VEATCH

CITY OF MORRO BAY
MORRO BAY WATER
RECLAMATION FACILITY (WRF)

CHEMICAL FACILITY - OVERALL
CIVIL-MECHANICAL
3D VIEWS

DESIGNED: ADV
DETAILED: MAK
CHECKED:
APPROVED: Approver
DATE:

0 1/2 1

IF THIS BAR DOES NOT MEASURE 1" THEN DRAWING IS NOT TO FULL SCALE

PROJECT NO.
400530

90-M-001

SHEET
OF

PLOTTED: 7/30/2019 7:39:57 AM

D400530

NOTES:
1. AREA TO BE COATED PER THE REQUIREMENTS OF SPECIFICATION 099724.

1 2 3 4 5

19'-6" 20'-6" 14'-3" 14'-3"

A B

CHEMICAL CONTAINMENT BASIN WITH INTERGRAL SCALE (TYP OF 4)

CHEMICAL TOTE (TYP OF 4)

TRUCK UNLOADING AREA

TO RO CIP/NEUTRALIZATION TANK

TO PRODUCT WATER TANK

SODIUM HYDROXIDE TO FINE SCREEN EFFLUENT

NOTE 1

NOTE 1

TO ONSITE RECYCLED WATER PUMPS

TO MBR BACKWASH/CIP

DISINFECTION OF RO PRODUCT WATER

TO UVAOP SYSYTEM

TO OCEAN OUTFALL PIPING

TO RO CONCENTRATE WATER PIPING

TO RO FEED PIPING

23'-10"

1 90-M-301

SEPERATION WALL BETWEEN NON-COMPATIBLE CHEMICAL STORAGE TOTES, REFER TO DWG ### FOR DETAILS (TYP 2)

6"

TO RO FEED OUTLET PIPING

SULFURIC ACID AREA

TO UV/AOP SYSTEM

SULFURIC ACID DILUTION PANEL

EMERGENCY EYEWASH STATION (TYP OF 6)

CITRIC ACID AREA

TRANSFER TO MBR MAINTENANCE CLEAN

TRANSFER TO RO CIP SYSTEM

SODIUM BISULFITE AREA

DECHLORINATION TO OCEAN OUTFALL PIPING

ANTISCALE AREA

ANTISCALANT TO COMMON RO HEADER

SODIUM HYDROXIDE TANK HSO4-P-0101

SODIUM HYPOCHLORITE TANK HSO4-P-0101

7'-5"

NOTE 1 NOTE 1 NOTE 1 NOTE 1

1 90-M-301

CHEMICAL PIPING ROUTED TO CHEMICAL DUCT BOX. FOR CONTINUATION, REFER TO YARD PIPING DRAWINGS.

15'-0" 6'-9"

14'-3" 14'-3"

CHEMICAL PIPING ROUTED TO CHEMICAL DUCT BOX. FOR CONTINUATION, REFER TO YARD PIPING DRAWINGS.

12" 0' 1' 2' 3' 4' 5' 6' 7'

3/8" = 1'-0"

CHEMICAL FACILITY - OVERALL - PLAN

3/8" = 1'-0"

60% SUBMITTAL - NOT FOR CONSTRUCTION

NO.	BY	CHK	APP	DATE	REVISIONS AND RECORD OF USE
B	ADV	RWF	EVB	7/30/2019	60% SUBMITTAL
A	ADV	RWF	EVB	3/5/2019	30% SUBMITTAL

BLACK & VEATCH JOINT VENTURE

BLACK & VEATCH

FILANC

CITY OF MORRO BAY
MORRO BAY WATER RECLAMATION FACILITY (WRF)

CHEMICAL FACILITY - OVERALL CIVIL-MECHANICAL PLAN

DESIGNED: ADV
DETAILED: MAK
CHECKED:
APPROVED:
DATE:

0 1/2 1
IF THIS BAR DOES NOT MEASURE 1" THEN DRAWING IS NOT TO FULL SCALE

PROJECT NO. 400530

90-M-101
SHEET OF

PLOTTED: 7/30/2019 7:45:59 AM
D400530

NOTES:

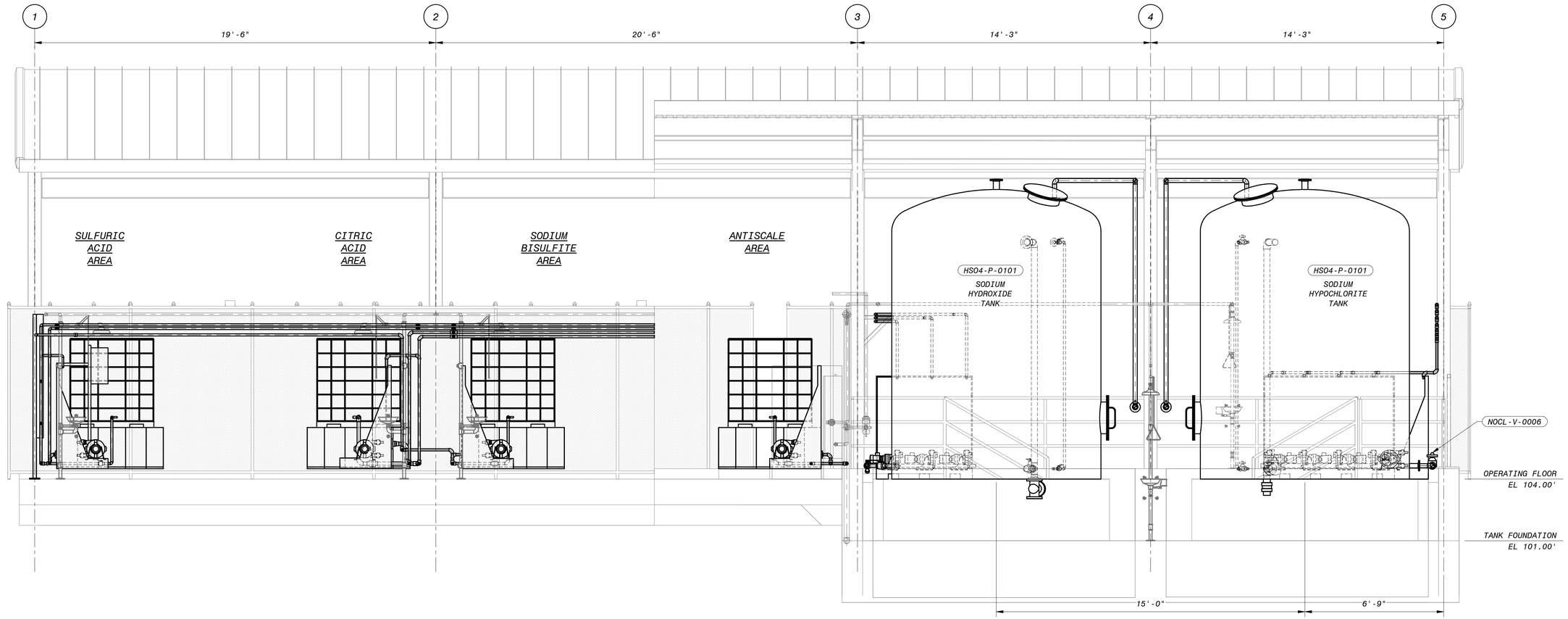

1 SECTION
90-M-101 3/8" = 1'-0"

12" 0' 1' 2' 3' 4' 5' 6' 7'
3/8" = 1'-0"

60% SUBMITTAL - NOT FOR CONSTRUCTION

NO.	BY	CHK	APP	DATE	REVISIONS AND RECORD OF USE
B	ADV	RWF	EVB	7/30/2019	60% SUBMITTAL
A	ADV	RWF	EVB	3/5/2019	30% SUBMITTAL

BLACK & VEATCH
JOINT VENTURE
BLACK & VEATCH
FILANC

CITY OF MORRO BAY
MORRO BAY WATER
RECLAMATION FACILITY (WRF)

CHEMICAL FACILITY - OVERALL
CIVIL-MECHANICAL
SECTION AND DETAILS 1

DESIGNED: ADV
DETAILED: MAK
CHECKED:
APPROVED:
DATE:

0 1/2 1
IF THIS BAR DOES NOT MEASURE 1" THEN DRAWING IS NOT TO FULL SCALE

PROJECT NO.
400530

90-M-301
SHEET
OF

PLOTTED: 7/30/2019 7:43:59 AM
D400530

EQUIPMENT IDENTIFICATION DESCRIPTION



PIPELINE IDENTIFICATION DESCRIPTION

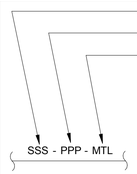

LINE SYMBOLS

- MAJOR PROCESS PIPING OR FLOW CHANNEL
- SECONDARY PROCESS PIPING
- MISCELLANEOUS PIPING
- SCREENED LINE DENOTES EXISTING PIPE OR EQUIPMENT
- DASHED LINE DENOTES FUTURE PIPE AND EQUIPMENT
- ELECTRIC SIGNAL
- HYDRAULIC SIGNAL
- PNEUMATIC SIGNAL
- SIGNAL CONNECTION POINT
- CONTROL SYSTEM BACKBONE NETWORK SIGNAL (ETHERNET)
- FIELD DEVICE NETWORK SIGNAL (ETHERNET)
- NON-STANDARD OR INDEPENDENT CONTROL SYSTEM NETWORK SIGNAL (AS NOTED ON DRAWINGS)

- B I-XX — SIGNAL LINE GOING TO ANOTHER SHEET
- B I-XX — SIGNAL LINE FROM ANOTHER SHEET (MATCH LETTERS)
- B I-XX — PROCESS LINE COMING/GOING TO/FROM ANOTHER SHEET
  - MATCH SHEET NO. IDENTIFIER
  - MATCH LINE NO.
- B — SIGNAL CONNECTION WITHIN THE SAME SHEET
- FLOW ARROW FOR PROCESS PIPING
- PROCESS LINES CROSSING (NOT CONNECTED)

MECHANICAL EQUIPMENT SYMBOLS

- VAPORIZER: AMBIENT
- PARTICULATE FILTER
- ROTARY SCROLL COMPRESSOR
- AIR FILTER
- WATER FILTER: CARTRIDGE TYPE
- WATER FILTER: MEMBRANE TYPE
- MIXER
- COMPRESSOR
- VALVE: MATERIAL HANDLING ROTARY
- AIR REGULATOR
- STATIC MIXER
- HEAT EXCHANGER: TYPE 1
- HEAT EXCHANGER: TYPE 2
- HEAT EXCHANGER: FINNED TUBE
- HEAT EXCHANGER: SHELL & TUBE
- HEAT EXCHANGER: PLATE & FRAME
- HEAT EXCHANGER: SPIRAL
- HEAT EXCHANGER: DOUBLE PIPE
- HEAT EXCHANGER: AIR
- BOILER
- AFTERCOOLER
- FILTER SEPARATOR
- S — SILENCER
- HYDROCYCLONE
- SPRAY BAR

PUMP & BLOWER SYMBOLS

- CENTRIFUGAL PUMP OR OTHER TYPE NOT SPECIFIED
- SUBMERGED CENTRIFUGAL PUMP
- SCREW (LIFT) PUMP
- ROTARY PUMP
- PROGRESSING CAVITY PUMP
- POSITIVE DISPLACEMENT PUMP
- PLUNGER PUMP
- VERTICAL PUMP
- SUMP PUMP
- CENTRIFUGAL FAN
- CENTRIFUGAL BLOWER
- POSITIVE DISPLACEMENT BLOWER
- COMPRESSOR: RECIPROCATING
- COMPRESSOR: ROTARY SCREW
- COMPRESSOR: LIQUID RING
- MOTOR DRIVEN DIAPHRAGM METERING PUMP
- S — SOLENOID PUMP
- PERISTALTIC PUMP
- DRUM PUMP
- DOUBLE DIAPHRAGM PUMP
- ELECTRIC MOTOR

WATER & WASTEWATER SYMBOLS

- OZONE GENERATOR WITH POWER SUPPLY
- OZONE GENERATOR
- GRIT CONCENTRATOR & DEWATERING SCREW
- BAR SCREEN: MECHANICAL
- GRIT COLLECTOR: VORTEX TYPE
- RECTANGULAR BASIN
- SOLIDS COLLECTOR
- SOLIDS COLLECTOR W/SETTLING PLATES
- RECTANGULAR SEDIMENTATION BASIN
- UV HORIZONTAL BULBS
- MANUAL BAR SCREEN
- GAS FLARE
- GRIT CLASSIFIER
- GRAVITY FILTER
- GRAVITY THICKENER
- CIRCULAR SEDIMENTATION BASIN
- DAF
- BELT FILTER PRESS
- GRAVITY BELT THICKENER
- CENTRIFUGE
- RECTANGULAR SEDIMENTATION BASIN WITH SETTLING PLATES
- GRIT BASIN
- SLUDGE GRINDER: INLINE
- SLUDGE GRINDER: CHANNEL MOUNTED
- GRIT CONCENTRATOR

PRIMARY ELEMENT & FITTING SYMBOLS

- DIAPHRAGM SEAL
- PRIMARY FLOW ELEMENT: ORIFICE PLATE
- PRIMARY FLOW ELEMENT: FLUME
- PRIMARY FLOW ELEMENT: TURBINE OR PROPELLER-TYPE
- M — PRIMARY FLOW ELEMENT: ELECTROMAGNETIC
- ΔT — THERMAL DISPERSION OR THERMAL MASS TYPE FLOW ELEMENT
- PRIMARY FLOW ELEMENT: TRANSIT-TIME ULTRASONIC
- FLOW CONDITIONER
- LE CON — CONDUCTANCE TYPE LEVEL SENSOR
- LE RAD — RADAR TYPE LEVEL SENSOR
- LE GWR — GUIDED WAVE RADAR TYPE LEVEL SENSOR
- ANNULAR TYPE DIAPHRAGM SEAL
- PRIMARY FLOW ELEMENT: POSITIVE DISPLACEMENT
- PRIMARY FLOW ELEMENT: VENTURI TUBE, FLOW NOZZLE, OR FLOW TUBE. * SEE MEASUREMENT SYMBOL NOTATIONS LIST
- PRIMARY FLOW ELEMENT: WEIR
- PRIMARY FLOW ELEMENT: PITOT TUBE
- PRIMARY FLOW ELEMENT: CORIOLIS
- HORN OR SIREN
- FG — ROTAMETER
- LE US — ULTRASONIC TYPE LEVEL SENSOR
- LE DP — PRESSURE SENSING LEVEL SENSOR
- PILOT LIGHT
- REDUCER - CONCENTRIC
- REDUCER - ECCENTRIC
- FLANGE
- D — DRAIN - BELL-UP
- D — DRAIN - FUNNEL
- FLEXIBLE CONNECTION
- CAP
- PLUG
- T — TRAP
- FLAME CHECK
- SURGE CHAMBER
- FLAME ARRESTER
- SEDIMENT TRAP
- P — INSTRUMENT PURGE OR FLUSHING DEVICE
- UNION
- HOSE CONNECTION
- STRAINER - Y TYPE
- STRAINER - BASKET
- Q — QUICK CONNECT
- VENT
- VENT - SCREENED
- COUPLING
- LG — SIGHTGLASS
- MOISTURE SEPARATOR
- EXPANSION LOOP
- SUCTION DIFFUSER
- THERMOWELL

CHEMICAL FEED EQUIPMENT SYMBOLS

- DIFFUSER: TANK
- DIFFUSER: CHANNEL
- INJECTOR
- RUPTURE DISK
- PULSATION DAMPNER
- CHLORINE CYLINDER
- VAPOR SUPERHEATER
- PRESSURE BUILDING COIL
- SPECTACLE, BLIND, CLOSED
- SPECTACLE, BLIND, OPEN
- CALIBRATION COLUMN
- EXPANSION TANK OR FUNNEL
- WEIGH SCALE
- DRIP LEG HEATER
- TOTE
- AS — AUTOMATIC SWITCHOVER
- PASTE TYPE LIME SLAKER
- EDUCTOR
- GAS FEEDER
- EVAPORATOR
- DRY CHEMICAL FEEDER
- TON — TON CONTAINER
- POLYMER BLENDER FEEDER
- POLYMER BLENDER FEEDER
- POLYMER INJECTION RING
- DIFFUSER
- DIFFUSER - PLAN
- CO2 VAPORIZOR
- COMBINATION SHOWER/ EYEWASH FOUNTAIN
- EYEWASH FOUNTAIN
- SHOWER

VALVE & GATE SYMBOLS

- GATE: SLUICE OR SLIDE
- VALVE: GATE OR OTHER TWO-WAY TYPE NOT OTHERWISE IDENTIFIED
- VALVE: BALL
- VALVE: GLOBE
- VALVE: BUTTERFLY
- VALVE: ECCENTRIC PLUG
- VALVE: NON-ECCENTRIC PLUG
- VALVE: THREE WAY
- VALVE: FOUR WAY
- VALVE: CHECK
- VALVE: DIAPHRAGM
- VALVE: VPORT BALL
- VALVE: MUD
- VALVE: THERMAL SHUTOFF
- VALVE: NEEDLE
- VALVE: SLEEVE
- GATE: FLAP
- VALVE: VENTED BALL
- VALVE: DIVERTER
- VALVE: PRESSURE REDUCING
- VALVE: PRESSURE SUSTAINING
- VALVE: PRESSURE REDUCING (SELF ACTUATING TYPE)
- VALVE: PRESSURE SUSTAINING (SELF ACTUATING TYPE)
- P — VALVE: PILOT ACTUATED RELIEF
- VALVE: VACUUM RELIEF
- VALVE: PRESSURE RELIEF
- VALVE: PRESSURE/VACUUM RELIEF
- VALVE: ANGLE
- VALVE: SET STOP
- VALVE: PINCH
- VALVE: STOP CHECK
- VALVE: TELESCOPING
- VALVE: COMBINATION AIR
- VALVE: AIR RELEASE
- VALVE: AIR VACUUM
- VALVE: CHLORINE WITH YOKE
- M — CHLORINE VACUUM REGULATOR
- VALVE: KNIFE GATE
- BACKFLOW PREVENTER
- VACUUM BREAKER
- EXPLOSION RELIEF
- VALVE: GENERIC ROTARY

VALVE AND GATE ACTUATOR SYMBOLS

- HANDWHEEL ACTUATOR
- S — SOLENOID
- S R — SOLENOID - MANUAL RESET
- S R R — SOLENOID - REMOTE RESET
- PRESSURE BALANCED DIAPHRAGM
- M — INTELLIGENT ELECTRIC
- M SM — SMALL MOTOR ACTUATOR
- I/P — CURRENT - TO-PNEUMATIC ACTUATOR
- E/H — ELECTRIC-HYDRAULIC
- SPRING-DIAPHRAGM ACTUATOR OR OTHERWISE UNSPECIFIED
- P — PNEUMATIC ACTUATOR
- P DA — PNEUMATIC ACTUATOR DOUBLE ACTING
- P SC — PNEUMATIC ACTUATOR SPRING CLOSE
- P SO — PNEUMATIC ACTUATOR SPRING OPEN
- FLOAT OPERATED VALVE
- SPRING OR WEIGHT ACTUATED RELIEF OR SAFETY VALVE ACTUATOR LOADED VALVE
- QUICK OPENING VALVE
- QUICK CLOSING VALVE
- LOADING/BACK PRESSURE VALVE

MATERIAL HANDLING EQUIPMENT SYMBOLS

- CYCLONE SEPARATER
- DUMPSTER
- BIN: LIVE BOTTOM
- H — BIN: SLIDING FRAME
- SCREEN: SINGLE VIBRATORY
- SCREEN: DOUBLE VIBRATORY
- GRINDER
- BIN - CLOSED TOP
- BIN - OPEN TOP
- HORIZONTAL BAR SCREEN
- MIXER: PUGMILL
- MIXER: BLENDER
- CONVEYOR: BELT
- CONVEYOR: VIBRATORY
- H — PISTON CAKE PUMP: SINGLE
- H H — PISTON CAKE PUMP: DOUBLE
- CONVEYOR: SCREW
- HOPPER
- DUST HOPPER

GENERAL NOTES

1. IN GENERAL, THE P&ID SYMBOLS AND DEVICE IDENTIFICATIONS ARE BASED ON INTERNATIONAL SOCIETY OF AUTOMATION, STANDARD PRACTICE ANSI/ISA-5.1 (2009). SOME MODIFICATIONS, ADDITIONS, AND ALTERATIONS HAVE BEEN MADE AS NEEDED TO ACCOMMODATE THE PROJECT REQUIREMENTS.
2. SOME CONTROL AND INTERLOCK REQUIREMENTS WHICH CAN BE MORE CLEARLY ILLUSTRATED ON SCHEMATIC DRAWINGS HAVE BEEN OMITTED FROM THE P&ID DRAWINGS.
3. THIS IS A GENERAL LEGEND SHEET. SOME SYMBOLS AND ABBREVIATIONS MAY NOT BE UTILIZED ON THIS SPECIFIC PROJECT.
4. PIPING AND EQUIPMENT LEGEND APPLIES TO P&ID SHEETS ONLY AND MAY DIFFER FROM LEGENDS FOR OTHER SHEETS.

60% SUBMITTAL - NOT FOR CONSTRUCTION

NO.	BY	CHK	APP	DATE	REVISIONS AND RECORD OF USE
A	BLB	TAH	EVB	7/30/2019	60% SUBMITTAL

BLACK & VEATCH
JOINT VENTURE
FILANC

CITY OF MORRO BAY
FILANC BLACK & VEATCH DB PROPOSAL
MORRO BAY WRF

LEGEND & ABBREVIATIONS
P&ID
SHEET 1

DESIGNED: BLB
DETAILED: PVR
CHECKED: TAH
APPROVED:
DATE:

0 1/2 1
IF THIS BAR DOES NOT MEASURE 1" THEN DRAWING IS NOT TO FULL SCALE

PROJECT NO. 400530

00-I-001
SHEET OF

PLOTTED: 29-07-2019 14:30:55
D400530

INSTRUMENT AND I/O ABBREVIATIONS
MEANINGS OF IDENTIFICATION LETTERS

LETTER	FIRST LETTER		SUCCEEDING LETTERS		
	MEASURED OR INITIATING VARIABLE	VARIABLE MODIFIER	READOUT OR PASSIVE FUNCTION	OUTPUT OR ACTIVE FUNCTION	FUNCTION MODIFIER
A	ANALYSIS		ALARM		
B	BURNER, COMBUSTION		USER'S CHOICE	USER'S CHOICE	USER'S CHOICE
C	USER'S CHOICE			CONTROL	CLOSE
D	USER'S CHOICE	DIFFERENTIAL			DEVIATION
E	VOLTAGE (EMF)		SENSOR, PRIMARY ELEMENT		
F	FLOW, FLOW RATE	RATIO (FRACTION)			
G	USER'S CHOICE		GLASS, GAUGE, VIEWING DEVICE		
H	HAND (MANUALLY INITIATED)				HIGH
I	CURRENT (ELECTRICAL)		INDICATE		
J	POWER		SCAN		
K	TIME OR TIME-SCHEDULE	TIME RATE OF CHANGE		CONTROL STATION	
L	LEVEL		LIGHT		LOW
M	USER'S CHOICE	MOMENTARY			MIDDLE OR INTERMEDIATE
N	USER'S CHOICE		USER'S CHOICE	USER'S CHOICE	USER'S CHOICE
O	USER'S CHOICE		ORIFICE (RESTRICTION)		OPEN
P	PRESSURE OR VACUUM		POINT (TEST CONNECTION)		
Q	QUANTITY	INTEGRATE OR TOTALIZE	INTEGRATE OR TOTALIZE		
R	RADIATION		RECORD		RUN
S	SPEED OR FREQUENCY	SAFETY		SWITCH	STOP
T	TEMPERATURE			TRANSMIT	
U	MULTIVARIABLE		MULTIFUNCTION	MULTIFUNCTION	
V	VIBRATION OR MECHANICAL ANALYSIS			VALVE, DAMPER OR LOUVER	
W	WEIGHT OR FORCE		WELL, PROBE		
X	UNCLASSIFIED	X-AXIS	ACCESORY DEVICES OR UNCLASSIFIED	UNCLASSIFIED	UNCLASSIFIED
Y	EVENT, STATE, OR PRESENCE	Y-AXIS		AUXILIARY DEVICES	
Z	POSITION, DIMENSION	Z-AXIS		DRIVE, ACTUATOR OR FINAL CTRL ELEMENT	

*NOTE TO DESIGNER: UPDATE "USER'S CHOICE" FIELDS FOR EACH PROJECT.

GENERAL NOTES

1. IN GENERAL, THE P&ID SYMBOLS AND DEVICE IDENTIFICATIONS ARE BASED ON INTERNATIONAL SOCIETY OF AUTOMATION, STANDARD PRACTICE ANSI/ISA-5.1 (2009). SOME MODIFICATIONS, ADDITIONS, AND ALTERATIONS HAVE BEEN MADE AS NEEDED TO ACCOMMODATE THE PROJECT REQUIREMENTS.
2. SOME CONTROL AND INTERLOCK REQUIREMENTS WHICH CAN BE MORE CLEARLY ILLUSTRATED ON SCHEMATIC DRAWINGS HAVE BEEN OMITTED FROM P&ID DRAWINGS.
3. THIS IS A GENERAL LEGEND SHEET. SOME SYMBOLS AND ABBREVIATIONS MAY NOT BE UTILIZED ON THIS SPECIFIC PROJECT. PIPING AND EQUIPMENT LEGEND APPLIES TO P&ID SHEETS.

PIPELINE MATERIAL CODE ABBREVIATIONS

DB-01	POLYETHYLENE TUBING IN SCHEDULE 40 CPVC CARRIER PIPE
DB-02	TEFLON TUBING IN SCHEDULE 40 CPVC CARRIER PIPE
DIP	SECTION 15061, DUCTILE IRON PIPE
SP	SECTION 15062, STEEL PIPE
PVC-XX	SECTION 15061, POLYVINYL CHLORIDE PIPE
PVC-01	SCHEDULE 40 PVC WITH SOLVENT WELDED FITTINGS
PVC-02	SCHEDULE 80 PVC WITH SOLVENT WELDED FITTINGS
PE-XX	SECTION 15067, MISCELLANEOUS PLASTIC PIPE, TUBING, AND ACCESSORIES
PE-06	SECTION 15067, MISCELLANEOUS PLASTIC PIPE, TUBING, AND ACCESSORIES
CPVC-XX	SECTION 15067, MISCELLANEOUS PLASTIC PIPE, TUBING, AND ACCESSORIES
CPVC-01	SCHEDULE 40 CPVC WITH SOLVENT WELDED FITTINGS
CPVC-02	SCHEDULE 80 CPVC WITH SOLVENT WELDED FITTINGS
CRP-XX	SECTION 15060, MISCELLANEOUS PIPING AND PIPE ASSEMBLY
CRP-01	CARPENTER 20 PIPE
HDPE	SECTION 02634, HIGH DENSITY POLYETHYLENE (HDPE) PRESSURE PIPE
SS-XX	SECTION 15064, STAINLESS STEEL PIPE, TUBING, AND ACCESSORIES
SS-02	AERATION PIPING SCHEDULE 10, 304SS
SS-04	PROCESS PIPING SCHEDULE 40, 304SS
SS-05	PROCESS PIPING SCHEDULE 40, 316SS
CSG-XX	SECTION 15065, MISCELLANEOUS STEEL PIPE, TUBING, AND ACCESSORIES
CS-XX	SECTION 15065, MISCELLANEOUS STEEL PIPE, TUBING, AND ACCESSORIES
CS-02	STANDARD WEIGHT STEEL WITH SOCKET WELDED FITTINGS
CS-03	STANDARD WEIGHT STEEL WITH BUTTWELDED FITTINGS
CI-XX	SECTION 15069, CAST IRON SOIL PIPE AND ACCESSORIES
CU-XX	SECTION 15070, COPPER TUBING AND ACCESSORIES

1. XX= numbers 01-20

INSTRUMENT AND I/O ABBREVIATION DEFINITIONS

AAH	ANALYZER ALARM HIGH
AAHH	ANALYZER ALARM HIGH-HIGH
AAL	ANALYZER ALARM LOW
AALL	ANALYZER ALARM LOW-LOW
AAX	ALARM HORN
AAL	STROBE ALARM LIGHT
AE	ANALYZER SENSOR
AI	ANALYZER INDICATION
AIT	ANALYZER INDICATING TRANSMITTER
ASH	ANALYZER SWITCH HIGH
ASHH	ANALYZER SWITCH HIGH-HIGH
CB	CONTROL BLOCK REFERENCE (SCADA LEVEL)
FA	TROUBLE
FAL	FLOW ALARM LOW
FAH	FLOW ALARM HIGH
FC	FLOW CONTROLLER
FI	FLOW DIGITAL INDICATOR (LED OR SCREEN)
FIC	FLOW INDICATING CONTROLLER
FE	PRIMARY FLOW ELEMENT/SENSOR
FG	FLOW SIGHT GAUGE
FIT	FLOW INDICATING TRANSMITTER
FQG	FLOW TOTALIZING GAUGE
FQIT	FLOW TOTALIZING INDICATING TRANSMITTER
FSH	FLOW SWITCH HIGH
FSL	FLOW SWITCH LOW
FY	FLOW SIGNAL CONVERTER, REPEATER, OR ISOLATOR
HIC	HAND INDICATING CONTROLLER
HMS	MOMENTARY PUSHBUTTON OR SELECTOR SWITCH
HS	HAND SWITCH
IE	CURRENT ELEMENT/SENSOR
IAH	CURRENT ALARM HIGH (MOTOR OVERLOAD)
ISH	CURRENT SWITCH HIGH USED TO DETECT HIGH TORQUE)
JA	POWER FAILURE ALARM
JI	POWER INDICATOR
JL	POWER INDICATING LIGHT
JIT	POWER INDICATING TRANSMITTER
KQI	TIME TOTALIZING INDICATOR
LAL	LEVEL ALARM LOW
LALL	LEVEL ALARM LOW-LOW
LAH	LEVEL ALARM HIGH
LAHH	LEVEL ALARM HIGH-HIGH
LE	PRIMARY LEVEL ELEMENT/SENSOR
LG	LEVEL SIGHT GAUGE
LI	LEVEL INDICATOR (LED OR SCREEN)
LSL	LEVEL SWITCH LOW
LSLL	LEVEL SWITCH LOW LOW
LSH	LEVEL SWITCH HIGH
LSHH	LEVEL SWITCH HIGH-HIGH
LY	LEVEL SIGNAL CONVERTER, ISOLATOR, OR REPEATER
OAH	TORQUE ALARM HIGH
OAHH	TORQUE ALARM HIGH HIGH
OSH	TORQUE SWITCH HIGH
OSHH	TORQUE SWITCH HIGH-HIGH
PAL	PRESSURE ALARM LOW
PALL	PRESSURE ALARM LOW-LOW
PAH	PRESSURE ALARM HIGH
PAHH	PRESSURE ALARM HIGH-HIGH
PDG	DIFFERENTIAL PRESSURE GAUGE
PDI	DIFFERENTIAL PRESSURE INDICATOR (LED OR SCREEN)
PDIT	DIFFERENTIAL PRESSURE INDICATING TRANSMITTER
PDAH	DIFFERENTIAL PRESSURE ALARM HIGGH
PDAHH	DIFFERENTIAL PRESSURE ALARM HIGH-HIGH
PDSH	DIFFERENTIAL PRESSURE SWITCH HIGH
PDSHH	DIFFERENTIAL PRESSURE SWITCH HIGH-HIGH
PDSL	DIFFERENTIAL PRESSURE SWITCH LOW
PDSLL	DIFFERENTIAL PRESSURE SWITCH LOW-LOW
PE	PRESSURE SENSOR
PG	PRESSURE GAUGE
PI	PRESSURE INDICATOR (LED OR SCREEN)
PIT	PRESSURE INDICATING TRANSMITTER
PSL	PRESSURE SWITCH LOW
PSH	PRESSURE SWITCH HIGH
SI	SPEED INDICATION (LED OR SCREEN)
SC	SPEED CONTROL
SIT	SPEED INDICATING TRANSMITTER
SSL	SPEED SWITCH LOW
SIT	SPEED INDICATING TRANSMITTER
TAH	TEMPERATURE ALARM HIGH
TAHH	TEMPERATURE ALARM HIGH-HIGH
TAL	TEMPERATURE ALARM LOW
TDI	DIFFERENTIAL TEMPERATURE INDICATOR (LED OR SCREEN)
TDIT	DIFFERENTIAL TEMPERATURE TRANSMITTER
TE	TEMPERATURE SENSOR/RESISTANCE
	TEMPERATURE DETECTOR
TSH	TEMPERATURE SWITCH HIGH
TSHH	TEMPERATURE SWITCH HIGH HIGH
TSL	TEMPERATURE SWITCH LOW
TG	TEMPERATURE GAUGE
TI	TEMPERATURE INDICATOR (LED OR SCREEN)
TIT	TEMPERATURE INDICATING TRANSMITTER
UA	MULTIVARIABLE/COMMON ALARM/COMMON FAULT
UCR	RUN COMMAND
UCS	STOP COMMAND
VAH	VIBRATION ALARM HIGH
WE	PRIMARY WEIGHT SENSOR/LOAD CELL
WG	WEIGHT GAUGE
WIT	WEIGHT INDICATING TRANSMITTER
YA	GENERAL ALARM EVENT
YI	EVENT INDICATION (LED OR SCREEN)
YIR	RUNNING INDICATION
YIS	STOPPED INDICATION
YL	EVENT INDICATING LIGHT
YLR	RUNNING INDICATING LIGHT
YLS	STOPPED INDICATING LIGHT
ZI	POSITION INDICATOR
ZC	POSITION SET POINT
ZIC	CLOSED INDICATION
ZIO	OPEN INDICATION
ZLC	CLOSED INDICATING LIGHT
ZLO	OPEN INDICATING LIGHT
ZSC	CLOSED POSITION SWITCH
ZSO	OPEN POSITION SWITCH
ZIT	POSITION INDICATING TRANSMITTER
ZT	POSITION TRANSMITTER

GENERAL INSTRUMENT SYMBOLS

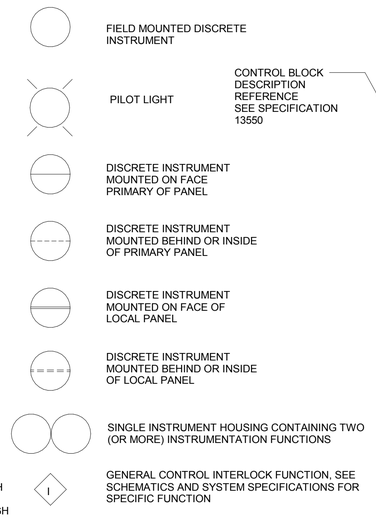

DIGITAL SYSTEMS INTERFACE SYMBOLS

NOTE: REFER TO DETAILED SYSTEM SPECIFICATIONS FOR FUNCTIONAL DESCRIPTION. ALSO SEE I/O SCHEDULES FOR COMPLETE INPUT AND OUTPUT LISTINGS.

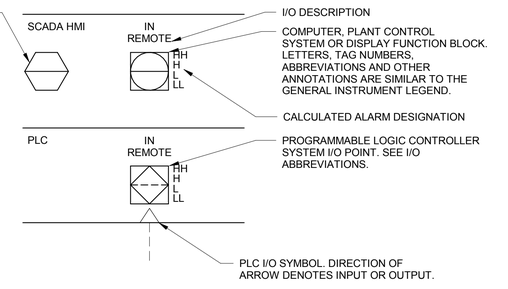

- △ DISCRETE INPUT
- ▽ DISCRETE OUTPUT
- ▲ ANALOG INPUT
- ▼ ANALOG OUTPUT
- △ PULSE INPUT

INSTRUMENTATION SYMBOLOGY AND DESIGNATIONS

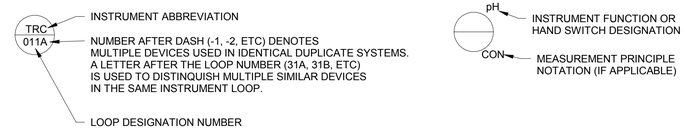

FUNCTION DESIGNATIONS AND ABBREVIATIONS

MEASUREMENT PRINCIPLE NOTATIONS

CON	CONDUCTANCE
DP	DIFFERENTIAL PRESSURE SENSING
FLN	FLOW NOZZLE
FLT	FLOW TUBE
GWR	GUIDED WAVE RADAR
RAD	RADAR
US	ULTRASONIC
VENT	VENTURI TUBE

CALCULATED ALARM DESIGNATIONS

L	LOW
LL	LOW-LOW
H	HIGH
HH	HIGH-HIGH

INDICATING LIGHT/ALARM DESIGNATIONS

OVRLD	OVERLOAD
TRQ HI	TORQUE HIGH
TRQ HI-HI	TORQUE HIGH HIGH

INSTRUMENT FUNCTIONS

K	GAIN OR ATTENUATE (INPUT:OUTPUT)
-K	GAIN AND REVERSE
Σ	ADD OR SUM (ADD AND SUBTRACT)
Δ	SUBTRACT (DIFFERENCE)
√‾	EXTRACT SQUARE ROOT
÷	DIVIDE
F(X)	CHARACTERIZE SIGNAL
>	HIGH-SELECT
<	LOW-SELECT
×	MULTIPLY
∫	INTEGRATE (TIME INTEGRAL)
CH4	METHANE
CL2	CHLORINE RESIDUAL
CO2	CARBON DIOXIDE
DO	DISSOLVED OXYGEN
H2S	HYDROGEN SULFIDE
LEL	LOWER EXPLOSIVE LIMIT
MCC	MOTOR CONTROL CENTER
MLSS	MIXED LIQUOR SUSPENDED SOLIDS
02	OXYGEN (PURITY)
03	OZONE
pH	pH
TURB	TURBIDITY
COND	CONDUCTIVITY

HAND SWITCH DESIGNATIONS

FR	FORWARD-REVERSE
OCA	OPEN-CLOSE-AUTO
OOR	ON-OFF-REMOTE
OOA	ON-OFF-AUTO
LOR	LOCAL-OFF-REMOTE
OO	ON-OFF
OC	OPEN-CLOSE
LR	LOCAL REMOTE
HOA	HAND-OFF-AUTO
LOA	LOCAL-OFF-AUTO
HOR	HAND-OFF-REMOTE
OSC	OPEN-STOP-CLOSE
FWD	FORWARD
REV	REVERSE

TRANSDUCER & CONVERTER DESIGNATION

E	VOLTAGE
FSK	FREQUENCY SHIFT KEYING
H	HYDRAULIC
I	CURRENT
P	PNEUMATIC PULSE
PD	PULSE DURATION
PF	PULSE FREQUENCY
R	RESISTANCE (ELECTRICAL)

EXAMPLE: I/P = CURRENT TO PNEUMATIC TRANSDUCER

POWER SUPPLY ABBREVIATIONS

AS	AIR SUPPLY
ES	ELECTRIC SUPPLY
GS	GAS SUPPLY
HS	HYDRAULIC SUPPLY
NS	NITROGEN SUPPLY
SS	STEAM SUPPLY
WS	WATER SUPPLY
24V	24VDC
120V	120VAC
480V	480VAC

120V — POWER SUPPLY SOURCE LABEL. USED ONLY WHERE NECESSARY TO HELP CLARIFY AN INSTRUMENT OR SYSTEM FUNCTION.

*NOTE TO DESIGNER: OR 24VDC OR 480VAC

60% SUBMITTAL- NOT FOR CONSTRUCTION

NO.	BY	CHK	APP	DATE
A	BLB	TAH	EVB	7/30/2019

REVISIONS AND RECORD OF USE

60% SUBMITTAL

BLACK & VEATCH

JOINT VENTURE

FILANC

BLACK & VEATCH

CITY OF MORRO BAY
FILANC BLACK & VEATCH DB PROPOSAL
MORRO BAY WRF

LEGEND & ABBREVIATIONS
P&ID
SHEET 2

DESIGNED: BLB
DETAILED: PVR
CHECKED: TAH
APPROVED:
DATE:

0 1/2 1
IF THIS BAR DOES NOT MEASURE 1" THEN DRAWING IS NOT TO FULL SCALE

PROJECT NO.
400530

00-I-002
SHEET
OF

PLOTTED: 29-07-2019 14:30:55
D400530

SYSTEM CODE ABBREVIATIONS

AA	AIR-AERATION
ACE	ACETIC ACID
ACT	ACETYLENE
GAC	ACTIVATED CARBON - GRANULAR
AIR	PROCESS AIR
AER	AERATION SYSTEM
IA	AIR, INSTRUMENT
ARW	AIR WASH
ALS	ALUMINUM SULFATE
NSO4	AMMONIUM SULFATE
NH3	ANHYDROUS AMMONIA
AS	ANTI-SEALANT
ANTI	ANTISCALANT
NHOH	AQUA AMMONIA
ARG	ARGON
ASH	ASH
BWH	BACKWASH - MEMBRANE/FILTER
BAL	BALLASTED FLOCCULATION
BIO	BIOSOLIDS
BIT	BIOTOWER
BLS	BLENDED SLUDGE
BNR	BNR
BRN	BRINE
CA	CITRIC ACID
CAL	CALCITE
CACL	CALCIUM HYPOCHLORITE
CATS	CALCIUM THIOSULFATE
C02	CARBON DIOXIDE
CAS	CARBON SLURRY
HCO3	CARBONIC ACID
CEN	CENTRATE
CEB	CHEMICAL ENHANCED BACKWASH - MEMBRANE
CL2	CHLORINE
CLO2	CHLORINE DIOXIDE
CA	CITRIC ACID
CIP	CLEAN IN PLACE
COA	COAGULATION
CAI	COMPRESSED AIR - INSTRUMENT
CMS	COMPRESSED AIR - SERVICE
CUS	COPPER SULFATE
CI	CORROSION INHIBITOR
DCL	DECHLORINATION
DET	DETERGENT
DWT	DEWATERING
FUE	DIESEL FUEL
DGG	DIGESTER GAS
DGM	DIGESTER GAS MIXING
DGS	DIGESTER SLUDGE
DGA	DIGESTION - AEROBIC
DIG	DIGESTION - ANAEROBIC
DCB	DISINFECTION CONTACT BASIN
DAF	DISSOLVED AIR FLOTATION
DRN	DRAINAGE
DWT	DEWATERING
EFP	EFFLUENT PUMPING
EXH	ENGINE EXHAUST
EQB	EQUALIZATION BASIN
FEC	FERRIC CHLORIDE
FES	FERRIC SULFATE
FRC	FERROUS CHLORIDE
FRS	FERROUS SULFATE
FLT	FILTRATION
FSW	FILTER SOLIDS WASTE
FUE	DIESEL FUEL
FLC	FLOCCULATION
GOX	GASEOUS OXYGEN
GSL	GASOLINE
GEN	GENERATOR
GRS	GREASE
GRT	GRIT
HSO4	SULFURIC ACID
HEL	HELIUM
HFL	HYDRAULIC FLUID
HCL	HYDROCHLORIC ACID
HFS	HYDROFLUOSILIC ACID (FLUORIDE)
HYD	HYDROGEN
PER	HYDROGEN PEROXIDE
IA	AIR, INSTRUMENT
INC	INCINERATION
INFP	INFLUENT PUMPING
INT	INTAKE
LAG	LAGOON STORAGE
LAP	LAND APPLICATION
CAH	LIME - HYDRATED
CAO	LIME - QUICKLIME
LIM	LIME STABILIZATION
LOX	LIQUID OXYGEN
LPG	LP GAS OR PROPANE GAS
MGOH	MAGNESIUM HYDROXIDE
MEM	MEMBRANE
MEG	METHANE GAS
MTH	METHANOL
MXL	MIXED LIQUOR
NACL	SODIUM HYPOCHLORITE
NAOH	SODIUM HYDROXIDE
NG	NATURAL GAS
NHS	SODIUM BISULFATE
NIT	NITROGEN
NIO	NITROUS OXIDE
NOCL	SODIUM HYPOCHLORITE
NPW	NON-POTABLE WATER
ODC	ODOR CONTROL
OIL	OIL
FO	OIL - FUEL
OZN	OZONE
OZD	OZONE DESTRUCT
PPP	PHOSPHATE
PO4	PHOSPHORIC ACID
PCL	POLYALUMINUM CHLORIDE
POLF	POLYMER
KMN	POTASSIUM PERMANGANATE
PAC	POWDERED ACTIVATE CARBON
PAR	PRE-AERATION
PSD	PRESEDIMENTATION
PRC	PRIMARY CLARIFICATION
PRS	PRIMARY SLUDGE
POLY	POLYMER
PRW	PLANT RECYCLED WATER
WWP	RAW WASTEWATER PUMPING
RWP	RAW WATER PUMPING
RWS	RAW WATER STORAGE
RCS	RECIRCULATED SLUDGE
RCW	RECLAIMED WATER
REF	REFRIGERANT
RES	RESIDUALS
RAS	RETURN ACTIVATED SLUDGE
RO	REVERSE OSMOSIS
SAN	SANITARY SYSTEM
SCR	SCREENINGS
SCM	SCUM
SCL	SECONDARY CLARIFICATION
SEP	SEPTAGE
SET	SETTLED WATER
SEW	SEWAGE
NAC	SODA ASH
NAL	SODIUM ALUMINATE
NAM	SODIUM ALUMINATE
NBC	SODIUM BICARBONATE
NHS	SODIUM BISULFITE
NCL	SODIUM CHLORIDE
NCL2	SODIUM CHLORITE
NAF	SODIUM FLUORIDE
NAX	SODIUM HEXAMETAPHOSPHATE
NAOH	SODIUM HYDROXIDE
NOCL	SODIUM HYPOCHLORITE
NASF	SODIUM SILICOFLUORIDE
STM	STEAM
STS	STORM SEWER
STW	STORM WATER
SO2	SULFUR DIOXIDE
HSO4	SULFURIC ACID
SW	SURFACE WASH
TERT	TERTIARY TREATMENT
TPRS	THICKENED PRIMARY SLUDGE
TWAS	THICKENED WASTE ACTIVATED SLUDGE
THCK	THICKENING
TW	TREATED WATER
TF	TRICKLING FILTER
UV	ULTRAVIOLET
VAC	VACUUM
WW	WASH WATER
WAS	WASTE ACTIVATED SLUDGE
WWW	WASTE WASH WATER
CDW	WATER - CONDENSATE
COLW	WATER - COOLING
DW	WATER - DISTILLED WATER
FW	WATER - FIRE
IRW	WATER - IRRIGATION
OZW	WATER - OZONATED
SWT	WATER - SEAL
HW	WATER - WATER HEATING
DEIW	WATER DEIONIZED
NPW	WATER NON-POTABLE
PEW	WATER PLANT EFFLUENT
PW	WATER POTABLE
RW	WATER RAW
WWT	WET WEATHER TREATMENT
ZOP	ZINC ORTHOPHOSPHATE
PRW	PLANT RECYCLED WATER

PROCESS CODE ABBREVIATIONS

AA	AIR-AERATION
ANTI	ANTISCALANT
AS	AIR-SCOUR
ATS	AUTOMATIC TRANSFER SWITCH
AWS	AERATED WAS
CA	CITRIC ACID
CAKE	DEWATERED SLUDGE CAKE
CHANNEL	PROCCESS CHANNEL
CIP	CLEAN IN PLACE
CIPR	REVERSE OSMOSIS CIP RETURN
CIPS	REVERSE OSMOSIS CIP SUPPLY
D	DRAIN
DRN	DRAIN
FA	FOUL AIR
FIW	FILTER INLET WASH
FBW	FILTER BACKWASH
FF	REVERSE OSMOSIS FORWARD FLUSH
FOW	FILTERED OUTFALL WATER
FSCM	FILTER SCUM
FSW	FILTER SOLIDS WASTE
GEN	GENERATOR FUEL
IA	INSTRUMENT AIR
IPR	INDIRECT POTABLE REUSE WATER
MFF	MICROFILTRATION FILTRATE
ML	MIXED LIQUOR
NACL	SODIUM HYPOCHLORITE
NAOH	SODIUM HYDROXIDE
NHS	SODIUM BISULFATE
NOCL	SODIUM HYPOCHLORITE
NPW	NON-POTABLE WATER
OF	OVERFLOW
PCR	REVERSE OSMOSIS PERMRATE
PEW	PLANT EFFLUENT WATER
POLY	POLYMER
POW	PLANT OUTFALL WATER
PRW	PLANT RECYCLED WATER
RAS	RETURNED ACTIVATED SLUDGE
RCW	RECLAIMED WATER
ROC	REVERSE OSMOSIS CONCENTRATE
ROF	REVERSE OSMOSIS FEED
ROP	REVERSE OSMOSIS PERMEATE
SA	SULFURIC ACID
SAN	SANITARY SEWER
UVE	ULTRAVIOLET TREATMENT EFFLUENT
WAS	WASTE ACTIVATED SLUDGE
WWR	WASTEWATER-RAW
WWS	WASTEWATER-SCREENED

FUNCTION CODE ABBREVIATIONS

ACMB	ACTIVATION CHAMBER
ACD	AERATOR, COARSE BUBBLE DIFFUSED
AEFD	AERATOR, FINE PORE DIFFUSED
AFS	AERATOR, FLOATING SURFACE
AES	AERATOR, SURFACE
AFC	AFTERCOOLER
AD	AIR DRYER
AF	AIR FILTER
AR	AIR RECEIVER OR REGULATOR
AS	AIR SEPARATOR
AST	AIR STRIPPER
ATS	AUTOMATIC TRANSFER SWITCH
BFP	BACKFLOW PREVENTER
BSNA	BASIN, AERATION
BSNX	BASIN, ANOXIC/OXIC
BNR	BASIN, BNR
BSNC	BASIN, CHLORINE CONTACT
BSNO	BASIN, OXIC
RBSN	BASIN, RECTANGULAR SEDIMENTATION
BFPS	BELT FILTER PRESS
B	BIN (STORAGE - ALL TYPES)
BA	BIN ACTIVATOR
BLC	BLOWER, CENTRIFUGAL
BL	BLOWER, POSITIVE DISPLACEMENT
BLR	BOILER
BDZ	BULLDOZER
CCLM	CALIBRATION COLUMN
CFG	CENTRIFUGE
CGR	CLASSIFIER, GRIT
CHF	CHEMICAL FEEDER
CGS	CHLORINE GAS SCRUBBER
PCLR	CLARIFIER, PRIMARY
SCLR	CLARIFIER, SECONDARY
CGR	CLASSIFIER, GRIT
CW	CLEARWELL
CMP	COMPRESSOR
CMB	COMPRESSOR, LIQUID RING
CMR	COMPRESSOR, ROTARY SCREW
CMPS	COMPRESSOR, STEAM
CTR	CONTAINER, PROCESS
COB	CONVEYOR, BELT
COS	CONVEYOR, SCREW
CFA	COVER, ALUMINUM DOME BASIN
CFD	COVER, FIXED DIGESTER
CFL	COVER, FLOATING DIGESTER
DCG	COVER, GAS HOLDER
DCM	COVER, MEMBRANE
CRN	CRANE
CRG	CRANE, GANTRY
CRJ	CRANE, JIB
CRP	CRANE, PORTABLE GANTRY
CRT	CRANE, TRAVELLING BRIDGE
CYL	CYLINDER, CHLORINE
CYG	CYLINDER, GAS
DWS	DEWATERING SCREW
DPS	DIAPHRAGM SEAL
DIF	DIFFUSER, CHANNEL
DFB	DIFFUSER BANK
DIP	DIFFUSER, PIPELINE
DIR	DIFFUSER, TANK
DGE	DIGESTER, AEROBIC
DGAP	DIGESTER, ANAEROBIC PRIMARY
DGAS	DIGESTER, ANAEROBIC SECONDARY
DSUV	DISINFECTION UNIT, UV
DAF	DISSOLVED AIR FLOTATION THICKENER
DUC	DUST COLLECTOR
EDC	EDUCTOR
EQPE	ELECTRICAL EQUIPMENT, GENERAL
EWSH	EMERGENCY EYE WASH FOUNTAIN
ESHR	EMERGENCY SHOWER
EMEW	EMERGENCY SHOWER & EYEWASH
EQPB	EQUIPMENT, BUILDING SERVICES
EQPT	EQUIPMENT, GENERAL OR UNSPECIFIED
EV	EVAPORATOR
EXC	EXPANSION CHAMBER
FAX	FAN, AXIAL FLOW
FAN	FAN, CENTRIFUGAL
FST	FENCE STIRRER
FTSP	FILTER GAS PARTICULATE
FLC	FILTER, CARTRIDGE TYPE
FLT	FILTER, UNDERDRAINS OR PRESSURE
FSW	FILTER, SURFACE WASH EQUIPMENT
FTTNG	FITTING, MISCELLANEOUS
FAR	FLAME ARRESTER
FC	FLAME CHECK
FLCH	FLOCCULATOR, HORIZONTAL
FLCV	FLOCCULATOR, VERTICAL
FD	FLOOR DRAIN
FS	FLOW SPLITTER
FE	FLUME, PARSHALL
FMSP	FOAM SEPARATOR
FL	FORKLIFT
CHF	GAS FEEDER
GF	GAS FLARE
GWH	GAS WATER HEATER
GFL	GATE, FLAP
GSD	GATE, SLIDE
GSC	GATE, SLUICE
G	GATE, WEIR
GEN	GENERATOR, ENGINE (BACKUP POWER)
GBT	GRAVITY BELT THICKENER
GVT	GRAVITY THICKENER
GRD	GRINDER PULVERIZER
GRB	GRIT BASIN, VORTEX TYPE
GRV	GRIT SCREW CONCENTRATOR
HEX	HEAT EXCHANGER
HST	HOIST
HSC	HOIST, CHAIN
HSE	HOIST, WIRE ROPE
HYDF	HYDRANT, FIRE
HYDW	HYDRANT, WALL
HYC	HYDROCYCLONE
INJ	INJECTOR, CHEMICAL
LS	LIME SLAKER
LP	LIGHTING PANEL
LSP	LOCAL START PANEL
MFM	MEMBRANE
MBMF	MEMBRANE, MICROFILTRATION
MBNF	MEMBRANE, NANOFILTRATION
MBRO	MEMBRANE, REVERSE OSMOSIS
MBUF	MEMBRANE, ULTRAFILTRATION
MXC	MIXER, CARBON
FLM	MIXER, FLOCCULATION
M	MOTOR
MCC	MOTOR CONTROL CENTER
MXI	MIXER, IN-LINE
MXPG	MIXER, PUGMILL
MXR	MIXER, RAPID
MXS	MIXER, STATIC
MXP	MIXER, SUBMERSIBLE, PROP OR BLENDER
MM	MUFFIN MONSTER
ORD	OVERFLOW ROOF DRAIN
ODU	OZONE DESTRUCT UNIT
OGEN	OZONE GENERATOR
PSU	OZONE POWER SUPPLY UNIT
PP	PACKAGED PLANT
PCN	PARTICLE COUNTER
PLT	PELLETIZER
PS	PENSTOCK
PIPE	PIPE
PSE	PLATE SETTLER
INJ	POLYMER INJECTOR RING
PP	POWER PANEL
PBC	PRESSURE BUILDING COIL
PD	PULSATION DAMPNER
PAD	PUMP, AIR DIAPHRAGM
PCL	PUMP, CENTRIFUGAL
PDM	PUMP, DIAPHRAGM METERING
PHW	PUMP, HEATING WATER
PHE	PUMP, HORIZONTAL END SUCTION
PSC	PUMP, HORIZONTAL SPLIT CASE
PPS	PUMP, PERISTALTIC
PPL	PUMP, PLUNGER
PPC	PUMP, PROGRESSING CAVITY
PSE	PUMP, SCREW ENCLOSED
PSE	PUMP, SCREW OPEN
PCL	PUMP, SUBMERSIBLE
PCH	PUMP, SUBMERSIBLE CHOPPER
PSS	PUMP, SUBMERSIBLE SUMP
PSP	PUMP, SUMP
P	PUMP, GENERAL OR UNSPECIFIED
PVD	PUMP, VERTICAL DIFFUSION VANE
PVE	PUMP, VERTICAL END SUCTION
PVW	PUMP, VERTICAL WET PIT
RSV	RESERVOIR
RCO	RESIDUAL COLLECTOR
RM	ROTAMETER
RD	RUPTURE DISK
SAMP	SAMPLER
SCL	SCALE
SC	SCALE, WEIGHT
SCRHT	SCREEN, HORIZONTAL
SCRI	SCREEN, INLINE SLUDGE
SCRA	SCREEN, MANUAL OR MECH CLEANED BAR
SCRS	SCREEN, STEP
SCT	SCREEN, TRAVELLING WATER
SCR	SCREEN, VIBRATORY
SCU	SCRUBBER
SMC	SCUM COLLECTOR
SCW	SCUM WEIR - ROTATING
SEP	SEPARATOR, MOISTURE OR CYCLONE
SGT	SIGHT GLASS - TALL
SG	SIGHT GAUGE
SIL	SILENCER
SLC	SLUDGE COLLECTOR, CIRCULAR
GCLR	SLUDGE COLLECTOR, CROSS
SFC	SLUDGE COLLECTOR, FLOC-CLARIFYING
SCS	SLUDGE COLLECTOR, SEC CLARIFIERS
SSC	SLUDGE COLLECTOR, SOLIDS CONTACT
SLCS	SLUDGE COLLECTOR, STRAIGHT LINE
GRD	SLUDGE GRINDER, INLINE OR CHANNEL
SBL	SOLIDS BLENDER-INLINE
STR	STRAINER
STRB	STRAINER BASKET TYPE
STRY	STRAINER Y TYPE
SRCH	SURGE CHAMBER
SWB	SWITCH BOARD
TSA	TANK, ABOVE GROUND STORAGE
TCN	TANK, AMMONIA STORAGE
TCR	TANK, CRYOGENIC STORAGE
DWT	TANK, DOUBLE WALL
TSE	TANK, ELEVATED STORAGE
TX	TANK, EXPANSION
TNK	TANK, FRP CHEMICAL STORAGE
TNK	TANK, GENERAL OR UNSPECIFIED
TCP	TANK, METHANOL
SMPT	TANK, SAMPLER
TCS	TANK, CHLORINE CONTACTOR
TSW	TANK, FLAT TOP STEEL WATER
XFR	TRANSFORMER
TRP	TRAP, DRIP
TRPS	TRAP, SEDIMENT
TRK	TRUCK
TB	TURBINE
TBC	TURBINE COMPRESSOR
TBG	TURBINE ENGINE
UPS	UNINTERRUPTABLE POWER SUPPLY
UVE	UV REACTOR
UVL	UV REACTOR, HORIZONTAL OR VERTICAL
VB	VACUUM BREAK
VJTR	VACUUM EJECTOR
VRG	VACUUM REGULATOR
AVR	VALVE, AIR RELEASE
AVRV	VALVE, AIR-VACUUM
VAG	VALVE, ANGLE
VBM	VALVE, AWWA BALL
VBF	VALVE, AWWA BUTTERFLY
VBFP	VALVE, BACKFLOW PREVENTER
VBM	VALVE, BALL MISCELLANEOUS
VCK	VALVE, CHECK
VCN	VALVE, CONE
VDG	VALVE, DIAPHRAGM OPERATED
VGD	VALVE, DOUBLE DISC GATE
VPE	VALVE, ECCENTRIC PLUG
VER	VALVE, EXPLOSION RELIEF
VFW	VALVE, FOUR WAY
VG	VALVE, GATE
V	VALVE, GENERAL OR UNSPECIFIED
VGL	VALVE, GLOBE
VBI	VALVE, INDUSTRIAL BUTTERFLY
VKG	VALVE, KNIFE GATE
VMR	VALVE, MATERIAL HANDLING ROTARY
VMD	VALVE, MUD
VND	VALVE, NEEDLE
PTV	VALVE, PILOT
VPN	VALVE, PINCH
VPO	VALVE, PISTON OPERATED
VPL	VALVE, NON-ECCENTRIC PLUG
VPC	VALVE, PRESSURE REDUCING
VPC	VALVE, PRESSURE SUSTAINING
VSP	VALVE, PRESSURE RELIEF
VSPV	VALVE, PRESSURE/VACUUM RELIEF
VP	VALVE, PROCESS
VGR	VALVE, RESILIENT SEATED GATE
VS	VALVE, SAFETY
VSLV	VALVE, SLEEVE
VSL	VALVE, SOLENOID
VTV	VALVE, TELESCOPING
VTS	VALVE, THERMAL SHUTOFF
VTW	VALVE, THREE WAY
VVB	VALVE, VACUUM BREAKER
VSV	VALVE, VACUUM RELIEF
VVP	VALVE, V-PORT BALL
VAP	VAPORIZER
VFD	VARIABLE FREQUENCY DRIVE
VSLB	VESSEL, BOOT
WC	WEIR, CIPOLETTI
WR	WEIR, RECTANGULAR
WV	WEIR, V-NOTCH
WLHC	WELL, HORIZONTAL COLLECTOR
WLV	WELL, VERTICAL

X = PROCESS CODE SUFFIX USED TO FURTHER SPECIFY A PROCESS STREAM (I.E. CL2_G FOR CHLORINE GAS OR CL2_S FOR CHLORINE SOLUTION)

NO.	BY	CHK	APP	DATE	REVISIONS AND RECORD OF USE
A	BLB	TAH	EVB	7/30/2019	60% SUBMITTAL

BLACK & VEATCH

JOINT VENTURE

FILANC

BLACK & VEATCH

CITY OF MORRO BAY
FILANC BLACK & VEATCH DB PROPOSAL
MORRO BAY WRF

LEGEND & ABBREVIATIONS
P&ID
SHEET 3

DESIGNED: BLB
DETAILED: PVR
CHECKED: TAH
APPROVED:
DATE:

0 1/2 1
IF THIS BAR DOES NOT MEASURE 1" THEN DRAWING IS NOT TO FULL SCALE

PROJECT NO.
400530

00-I-003
SHEET
OF

60% SUBMITTAL- NOT FOR CONSTRUCTION

PLOTTED: 29-07-2019 14:30:55
D400530

95-CTRL-SVR-0001 WITH 19" FULL SERVER RACK – IN SERVER RM

HISTORIAN REDUNDANT SERVERS

REDUNDANT SERVERS HOSTING SCADA AND I/O SERVERS I/O SERVERS

CMMS SERVER WITH CMMS SOFTWARE, DATABASE, AND FULL INTEGRATION WITH THE SCADA 2 X 32" SCREEN

TERMINAL, ACTIVE DIRECTORY, ANTI-VIRUS AND MICROSOFT UPDATE SERVER

OPERATOR HMI 2 X 32" SCREENS

ENGINEERING HMI 2 X 32" SCREENS

WIRELESS ACCESS (TYPICAL)

LASER PRINTER

ISP CONNECTION

ROUTER

VPN APPLIANCE / FIREWALL

FIREWALL (TYPICAL)

SINGLE MODE

TO EXTERNAL CONNECTIONS PUMP STATION OPERATION BUILDING WTP WWTP

ADMIN NETWORK SW*24 PORTS

DMZ SWITCH

ETHERNET SW (TYPICAL)

DMZ NETWORK

VPN APPLIANCE / FIREWALL

PCS HMI LAPTOP FOR REMOTE ACCESS

SCADA ROUTER

TABLET PC'C BY CITY. 2 TOTAL WITH HMI SOFTWARE

CONTROL ROOM

OUTDOORS WIRELESS ACCESS POINTS

WIRELESS NETWORK

–PROVIDE A WIRELESS NETWORK FOR THE ENTIRE SITE.

NOTE 4

NOTE 5

PRIMARY MODICON-PLC

SECONDARY MODICON-PLC

80-CTRL-PLC-0101

80-CTRL-PLC-0201

PLANT PLC IN E-BLDG (NOTE 6) 80-CTRL-LCP-0001

OPERATOR HMI 1 X 24" SCREEN

NOTE 1 (TYP OF 2)

A1-12 STRAND 50 MICRON FIBER OPTIC CABLE (TYPICAL)

OFFSITE FILE STORAGE SERVER

REDUNDANT SCADA HISTORIAN

SCADA TERMINAL SERVER

FIRE STATION (NOTE 2)

TO CITY ADMIN NETWORK

TO PUMP STATIONS AND WWTP

NOTE 1 (TYP OF 9)

51-CTRL-RIO-0001

90-CTRL-RIO-0001

31-CTRL-RIO-0001

72-CTRL-RIO-0001

21-CTRL-RIO-0001

RO AREA RIO PANEL 51-CTRL-LCP-0001

CHEM AREA RIO PANEL 90-CTRL-LCP-0001

MBR AREA RIO PANEL 31-CTRL-LCP-0001

SOLIDS AREA RIO PANEL 72-CTRL-LCP-0001

HW AREA RIO PANEL 21-CTRL-LCP-0001

OPERATOR HMI 1 X 24" SCREEN

51-RO-PLC-0001

VENDOR RO LCP 51-RO-LCP-0001

52-UV-PLC-0001

VENDOR UV LCP 52-UV-LCP-0001

32-MBR-PLC-0001

VENDOR MBR LCP 32-MBR-LCP-0001

VENDOR BELT FILTER PRESS LCP 72-DWT-LCP-0001

73-FSW-PLC-0001

VENDOR DISK FILTER LCP 73-FSW-LCP-0001

21-SCR-PLC-1001

VENDOR BAR SCREEN 1 LCP 21-SCR-LCP-1001

21-SCR-PLC-2001

VENDOR BAR SCREEN 2 LCP 21-SCR-LCP-2001

81-GEN-PLC-0002

VENDOR GEN LCP 81-GEN-LCP-0002

51-RO-LCP-0101 (51-RO-RIO-0101)

51-RO-LCP-0201 (51-RO-RIO-0201)

51-RO-LCP-0301 (51-RO-RIO-0301)

52-UV-LCP-0101 (52-UV-RIO-0101)

52-UV-LCP-0201 (52-UV-RIO-0201)

NOTES :

1. ALL OPERATOR HMI'S AND WIRELESS ACCESS POINTS ARE ON THE SCADA NETWORK.
2. ALL EQUIPMENT LOCATED IN FIRE STATION TO BE SUPPLIED BY THE CITY.
3. SCADA AND I/O SERVERS CONNECTED TO BOTH SCADA AND PLANT CONTROL NETWORKS.
4. FIBER RING CONSISTS OF 6 STRANDS TOTAL. 2 STRANDS FOR SCADA NETWORK, 2 STRANDS FOR PLANT CONTROL NETWORK, AND 2 SPARE STRANDS.
5. RIO FIBER RING CONSISTS OF 4 STRANDS TOTAL. 2 STRANDS FOR RIO RING AND 2 SPARE STRANDS.
6. DUAL PLCS IN A REDUNDANT CONFIGURATION.

NO.	BY	CHK	APP	DATE	REVISIONS AND RECORD OF USE
B	BLB	TAH	EVB	7-30-2019	60% SUBMITTAL
A	BLB	TAH	EVB	5-5-2019	30% SUBMITTAL

JOINT VENTURE

FILANC BLACK & VEATCH

CITY OF MORRO BAY
FILANC B&V DB PROP
MORRO BAY WRF

NETWORK OVERALL DIAGRAM

DESIGNED: BLB
DETAILED: PVR
CHECKED: TAH
APPROVED:
DATE:

0 1/2 1
IF THIS BAR DOES NOT MEASURE 1" THEN DRAWING IS NOT TO FULL SCALE

PROJECT NO. 400530

00-I-701
SHEET XX OF XX

60% SUBMITTAL - NOT FOR CONSTRUCTION

MAL79137, 7/29/2019 2:21:00 PM
MAL79137, 7/29/2019 2:22:39 PM
MAL79137
D81203
FD81230

PCS HMI

21-CTRL-RIO-0001

FLOW FI 0101 | FLOW FI 0201 | START TRAIN 1 UCR 0001 | STOP TRAIN 1 UCR 0001 | FAIL YA 0002 | HI LEVEL LAH 0002 | IN AUTO YI 0002 | ESTOP YA 0002 | RUNNING YIR 0002 | LOW SPEED YIR 0002 | HIGH SPEED YIR 0002 | SPEED RESET CMD SRC 0002

IN REMOTE YI 1001 | OPENED ZIO 1001 | CLOSED ZIC 1001 | OPEN CMD ZCO 1001 | CLOSE CMD ZCC 1001

IN REMOTE YI 2001 | OPENED ZIO 2001 | CLOSED ZIC 2001 | OPEN CMD ZCO 2001 | CLOSE CMD ZCC 2001

BAR SCREEN CONTROL SYSTEM PANEL
21-SCR-LCP-1001 (WITH LOCAL STARTERS/DRIVES)

QIK RESET TIMER | QIK AUTO HIGH SPD DELAY TIMER | SK MANUAL SPEED CONTROLLER | QIK 24 HR PROGRAM TIMER | HS OCA | YA FAIL | YL OFF

YL FWD | SK LOW SPEED SETPOINT | SK HIGH SPEED SETPOINT | HMS SPEED RESET | SPRAY WATER | YL FWD | YL REV | PAL

YL REV | SI SPEED INDICATION | LIK HIGH DIFF SETPOINT | LAH

YA | YA | TAH | SI | HMS | SK | HMS RESET | JL

BAR SCREEN NO. 1 CONTROLS

WASHER COMPACTOR NO. 1 CONTROLS

HS 1001 LOR | HS 1001 OSC | ZLC 1001 | ZLO 1001 | ZSC 1001 | ZSO 1001 | 480V
VALVE ACTUATOR

HS 2001 LOR | HS 2001 OSC | ZLC 2001 | ZLO 2001 | ZSC 2001 | ZSO 2001 | 480V
VALVE ACTUATOR

PACKAGED HEADWORKS NO. 1
(COARSE SCREEN AND WASHER COMPACTOR, BYPASS CHANNEL,VORTEX GRIT AND GRIT SEPARATOR/CLASSIFIER)

FROM PLANT SEWER DUPLEX PUMPS

16" X 12" REDUCING ELBOW

4"-WWR-DIP

FIT 0101 — 24V

FE 0101

16"-WWR-HDPE INFLUENT MAIN

SCR-V-0101

12"

12"-WWR-HDPE

SCR-V-0102

16"-WWR-DIP

24"-WWR-DIP

SCR-V-1001

16" X 12" EXPANDING ELBOW

24V — LDIT 1001 — LDSH 1001

AA 21-I-001
TO GRIT REMOVAL COARSE SCREENS BYPASS CHANNEL

LE 1001A US — LSHH 1001

OPEN BASIN CONNECTION - NOT PIPE

FR HS — 00A HS — E-STOP HS

FR HS — OOA HS — E-STOP HS

OSH 1001

PSL 1001

1"-NPW-PVC-02

FROM PLANT WATER SYSTEM

NPW-V-1008

ZS 1101 — ZS 1201

LE 1001B US

WASHER COMPACTOR SCR-WCMP-1001

CHANNEL

COARSE SCREEN NO. 1
SCR-SCR-1001

SCR-V-1002

TO PLANT SEWER

4"-WWS-DIP

CONVEYOR SCR-COS-1001

SYSTEM CODE = GRT — HS OO

OPEN BASIN CONNECTION - NOT PIPE

AA 21-I-001
FROM COARSE SCREEN BYPASS CHANNEL

24"-WWS-DIP

GRT-V-1001

18"-WWS-DIP

AE 22-I-001
FROM SAFE SYSTEM DIVERSION BOX

GRIT COLLECTOR NO. 1
GRT-GRB-1001

AD 21-I-001
FROM SEPARATOR / CLASSIFIER DRAIN NO. 1

3"-WWS-DIP

SYSTEM CODE = GRT — HS OOR

4"-WWS-DIP

PG 1001

GRT-V-1002

GRT-V-1003

4"-WWS-DIP

SYSTEM CODE = GRT

FLASHPORT

GRIT PUMP NO. 1
GRT-P-1001

PSL 1001

SYSTEM CODE =NPW

NPW-V-1005

SEAL WATER
NOTE 5

10"-FA-PVC-01

NOTE 7

AC 23-I-001
TO ODOR CONTROL

VENT

NPW-V-1006

FROM PLANT WATER SYSTEM

NPW-V-1007

SEPARATOR CLASSIFIER
GRT-CGR-1001

GRT-V-1004

3"-WWS-DIP

AD 21-I-001
TO COARSE SCREENS NO. 1 EFFLUENT

FROM PLANT SEWER DUPLEX PUMPS

4"-WWR-DIP

FIT 0201 — 24V

FE 0201

SCR-V-0201

12" X 8" REDUCING ELBOW

12"-WWR-HDPE INFLUENT MAIN

8"

8"-WWR-HDPE

SCR-V-0202

12" X 8" EXPANDING ELBOW

12"-WWR-HDPE

SCR-V-2001

24"-WWR-DIP

AB 21-I-002
TO PACKAGED HEADWORKS NO. 2

FROM PLANT WATER SYSTEM

3"-NPW-PVC-02

NPW-V-1001

NPW-V-1002

2"-NPW-PVC-02

NPW-V-1003

NPW-V-1004

PACKAGED HEADWORKS NO.1 SKID

NOTES:

1. SEE LEGEND AND ABBREVIATIONS ON DRAWING 00-I-001, 00-I-002 AND 00-I-003.
2. AREA CODE IS 21 UNLESS OTHERWISE NOTED. SYSTEM CODE IS SCR UNLESS OTHERWISE NOTED.
3. LOCAL CONTROL DEVICES SUCH AS INDICATING LIGHTS AND SWITCHES, LOCATED IN MCC's OR AT DRIVEN EQUIPMENT MAY NOT INDICATED ON THIS P&ID.
4. FOR DRAWING CLARITY, VALVE TAG NUMBER ONLY SHOW THE SEQUENCE NUMBER UNLESS OTHERWISE NOTED.
5. SEE THE SEAL WATER SYSTEM DETAILS IN THE SEAL WATER STATIONS SPECIFICATION FOR FURTHER SEAL WATER VALVE AND PIPING REQUIREMENTS.
6. FIELD INSTRUMENTATION POWER SHALL BE SUPPLIED BY ASSOCIATED CONTROL PANEL OR INDEPENDENT POWER SUPPLY.
7. SEE HVAC/ MECHANICAL SPECIFICATION FOR ADDITIONAL DETAILS ON ODOR CONTROL DUCTING

* ITEM FURNISHED BY PACKAGED HEADWORKS SUPPLIER.

60% SUBMITTAL- NOT FOR CONSTRUCTION

NO.	BY	CHK	APP	DATE	REVISIONS AND RECORD OF USE
B	BLB	TAH	EVB	7/30/2019	60% SUBMITTAL
A	BLB	TAH	EVB	3/5/2019	30% SUBMITTAL

BLACK & VEATCH
JOINT VENTURE
FILANC
BLACK & VEATCH

CITY OF MORRO BAY
MORRO BAY WATER RECLAMATION FACILITY (WRF)

HEADWORKS AREA - HEADWORKS P&ID TRAIN 1

DESIGNED: BLB, TDE
DETAILED: PVR
CHECKED: TAH
APPROVED:
DATE:

0 1/2 1
IF THIS BAR DOES NOT MEASURE 1" THEN DRAWING IS NOT TO FULL SCALE

PROJECT NO. 400530

21-I-001
SHEET OF

PLOTTED: 29-07-2019 16:37:06
D400530

PCS HMI

21-CTRL-RIO-0001

START TRAIN 2 UCR 0002 | STOP TRAIN 2 UCR 0002 | FAIL YA 0002 | HI LEVEL LAH 0002 | IN AUTO YI 0002 | ESTOP YA 0002 | RUNNING YIR 0002 | LOW SPEED YIR 0002 | HIGH SPEED YIR 0002 | SPEED RESET CMD SRC 0002

PCS HMI

21-CTRL-RIO-0001

START TRAIN 2 UCR 0002 | STOP TRAIN 2 UCR 0002 | FAIL YA 0002 | HI LEVEL LAH 0002 | IN AUTO YI 0002 | ESTOP YA 0002 | RUNNING YIR 0002 | LOW SPEED YIR 0002 | HIGH SPEED YIR 0002 | SPEED RESET CMD SRC 0002

PACKAGED HEADWORKS NO. 2
(COARSE SCREEN AND WASHER COMPACTOR,
BYPASS CHANNEL,
VORTEX GRIT AND GRIT SEPARATOR/CLASSIFIER)

BAR SCREEN CONTROL SYSTEM PANEL
21-SCR-LCP-1002 (WITH LOCAL STARTERS/DRIVES)

BAR SCREEN NO. 2 CONTROLS: QIK RESET TIMER; QIK AUTO HIGH SPD DELAY TIMER; SK MANUAL SPEED CONTROLLER; QIK 24 HR PROGRAM TIMER; YL FWD; SK LOW SPEED SETPOINT; SK HIGH SPEED SETPOINT; HMS SPEED RESET; YL REV; SI SPEED INDICATION; LIK HIGH DIFF SETPOINT; LAH; YA; YA; TAH; SI; HMS; SK; HMS RESET; JL

WASHER COMPACTOR NO. 2 CONTROLS: HS OCA; YA FAIL; YL OFF; SPRAY WATER; YL FWD; YL REV; PAL

24V; LDIT 2001; LDSH 2001

FR HS; OOA HS; E-STOP HS

FR HS; OOA HS; E-STOP HS

OPEN BASIN CONNECTION - NOT PIPE

AF 21-I-002
COARSE SCREEEN BYPASS CHANNNEL TO GRIT REMOVAL

OSH 2001

1"-NPW-PVC-02
FROM PLANT WATER SYSTEM

PSL 2001

NPW-V-2008

LSHH 2001

LE 2001A US

ZS 2101

ZS 2201

LE 2001B US

24"-WWR-DIP

AB 21-I-001
PACKAGED HEADWORKS NO. 2 INFLUENT

CHANNEL

WASHER COMPACTOR SCR-WCMP-2001

COARSE SCREEN NO. 2 SCR-SCR-2001

SCR-V-2002

TO PLANT SEWER

4"-WWS-DIP

CONVEYOR SCR-COS-2001

AI 21-I-002
FROM SEPARATOR / CLASSIFIER DRAIN NO. 2

3"-WWS-DIP

SYSTEM CODE = GRT

HS OO

OPEN BASIN CONNECTION - NOT PIPE

AF 21-I-002
FROM COARSE SCREEN BYPASS CHANNEL

24"-WWS-DIP

GRT-V-2001

18"-WWS-DIP

AG 22-I-001
FROM SAFE SYSTEM DIVERSION BOX

GRTI COLLECTOR NO. 2 GRT-GRB-2001

SYSTEM CODE = GRT

HS OOR

4"-WWS-DIP

PG 2001

4"-WWS-DIP

GRT-V-2003

4"-WWS-DIP

SYSTEM CODE = GRT

GRT-V-2002

FLASHPORT

GRIT PUMP NO. 2 GRT-P-2001

PSL 2001

SYSTEM CODE =NPW

10"-FA-PVC-01

NOTE 7

AH 23-I-001
TO ODOR CONTROL

NPW-V-2003

NPW-V-2004

NPW-V-1205

SEAL WATER NOTE 5

VENT

FROM PLANT WATER SYSTEM

NPW-V-2006

NPW-V-2007

M

FROM PLANT WATER SYSTEM

3"-NPW-PVC-02

NPW-V-2001

NPW-V-2002

2"-NPW-PVC-02

PACKAGED HEADWORKS NO.2 SKID

SEPARATOR CLASSIFIER GRT-CGR-2001

GRT-V-2004

3"-WWS-DIP

AI 21-I-002
TO COURSE SCREENS NO. 2 EFFLUENT

NOTES:

1. SEE LEGEND AND ABBREVIATIONS ON DRAWING 00-I-001, 00-I-002 AND 00-I-003.
2. AREA CODE IS 21 UNLESS OTHERWISE NOTED. SYSTEM CODE IS SCR UNLESS OTHERWISE NOTED.
3. LOCAL CONTROL DEVICES SUCH AS INDICATING LIGHTS AND SWITCHES, LOCATED IN MCC's OR AT DRIVEN EQUIPMENT MAY NOT INDICATED ON THIS P&ID.
4. FOR DRAWING CLARITY, VALVE TAG NUMBER ONLY SHOW THE SEQUENCE NUMBER UNLESS OTHERWISE NOTED.
5. SEE THE SEAL WATER SYSTEM DETAILS IN THE SEAL WATER STATIONS SPECIFICATION FOR FURTHER SEAL WATER VALVE AND PIPING REQUIREMENTS.
6. FIELD INSTRUMENTATION POWER SHALL BE SUPPLIED BY ASSOCIATED CONTROL PANEL OR INDEPENDENT POWER SUPPLY.
7. SEE HVAC/ MECHANICAL SPECIFICATION FOR ADDITIONAL DETAILS ON ODOR CONTROL DUCTING

* ITEM FURNISHED BY PACKAGED HEADWORKS SUPPLIER.

60% SUBMITTAL- NOT FOR CONSTRUCTION

NO.	BY	CHK	APP	DATE	REVISIONS AND RECORD OF USE
B	BLB	TAH	EVB	7/30/2019	60% SUBMITTAL
A	BLB	TAH	EVB	3/5/2019	30% SUBMITTAL

BLACK & VEATCH
JOINT VENTURE
FILANC
BLACK & VEATCH

CITY OF MORRO BAY
MORRO BAY WATER
RECLAMATION FACILITY (WRF)

HEADWORKS AREA - HEADWORKS
P&ID
TRAIN 2

DESIGNED: BLB, TDE
DETAILED: PVR
CHECKED: TAH
APPROVED:
DATE:

0 1/2 1
IF THIS BAR DOES NOT MEASURE 1" THEN DRAWING IS NOT TO FULL SCALE

PROJECT NO. 400530

21-I-002
SHEET
OF

PLOTTED: 29-07-2019 16:37:07
D400530

PCS HMI

21-CTRL-RIO-0001

FLOW FI 0001 | TRBL FA 0001 | LEVEL LI 0001 | IN REMOTE YI 2001 | POSITION SETPT ZC 2001 | POSITION FEEDBACK ZI 2001 | FLOW FI 1001 | IN REMOTE YI 1001 | POSITION SETPT ZC 1001 | POSITION FEEDBACK ZI 1001 | FLOW FI 2001 | RUN CMD UCR 2001 | IN AUTO YI 2001 | RUNNING FAST YIR 2001 | RUNNING SLOW YIR 2001 | TRBL FA 2001 | HI DIFF. RESSURE PDA 2001 | SPRAY WASH LOW PRESSURE PAL 2001 | RUN CMD UCR 1001 | IN AUTO YI 1001 | RUNNING FAST YIR 1001 | RUNNING SLOW YIR 1001 | TRBL YA 1001 | HI DIFF. RESSURE PDA 1001 | SPRAY WASH LOW PRESSURE PAL 1001 | ESTOP YA 0001 | ZERO SPEED SI 0001 | MOTOR OVLD YA 0001 | RUNNING YIR 0001 | IN REMOTE YI 0001 | RUN CMD UCR 0001

HS 2001 | LOR | HS 2001 | OSC | ZT 2001 | ZI 2001 — VALVE ACTUATOR — 480VAC

HS 1001 | LOR | HS 1001 | OSC | ZT 1001 | ZI 1001 — VALVE ACTUATOR — 480VAC

POWER JL | SLOW YL | FAST YL | TRBL YA | OFF YL
LDAH | TAH | PAL
LDIT 2001 | I
ETM KQI | E-STOP HS | RESET HS | HOA HS

FINE SCREEN CONTROL SYSTEM PANEL
* 22-SCR-LCP-0002 (WITH LOCAL STARTERS/DRIVES)

POWER JL | SLOW YL | FAST YL | TRBL YA | OFF YL
LDAH | TAH | PAL
LDIT 1001 | I
ETM KQI | E-STOP HS | RESET HS | HOA HS

FINE SCREEN CONTROL SYSTEM PANEL
* 22-SCR-LCP-0001 (WITH LOCAL STARTERS/DRIVES)

CONVEYOR AND DISCHARGE CHUTE CONTROL PANEL
* 22-SCR-LCP-0003 (WITH LOCAL STARTERS/DRIVES)

YARD PIPING | PLANT PIPING

UK 90-I-003 — SODIUM HYDROXIDE — 1/2"-NAOH-PE-06 — 1/2"-NAOH-CS-02

24"-WWS-DIP — BA 71-I-002 — TO SAFE SETTLE

QB 22-I-001 — SAFE BACKWASH RETURN FLOW — 6"-WWS-DIP

AG 21-I-002 — FROM PACKAGED HEADWORKS NO. 2 — 18"-WWS-DIP

AE 21-I-001 — FROM PACKAGED HEADWORKS NO. 1 — 18"-WWS-DIP

COMPOSITE SAMPLER SCR-SAMP-0010 — 120VAC

24V — LIT 0001 — LE 0001 US

3"-WWS-DIP

SAFE SYSTEM DIVERSION BOX

6"-WWS-DIP

24V — FIT 1001 — FE 1001 — M — 8"

8"-WWS-DIP — SCR-V-1001 — FLOW CONTROL VALVE

12"-WWS-DIP

12"-WWS-DIP

24V — FIT 2001 — FE 2001 — M — 8"

12"-WWS-DIP — SCR-V-2001 — FLOW CONTROL VALVE

8"-WWS-DIP

12"-WWS-DIP

E-STOP HS — LE 2001A US — PSL 2001 — SYSTEM CODE = PRW — NPW-V-2001 — LE 2001B US — FROM PLANT RECYCLED WATER (PRW)

PACKAGED FINE SCREEN NO. 2 WITH WASHER COMPACTOR SCR-SCR-1201

E-STOP HS — LE 1001A US — PSL 1001 — SYSTEM CODE = PRW — NPW-V-1001 — LE 1001B US — FROM PLANT RECYCLED WATER (PRW)

12"-WWS-DIP

PACKAGED FINE SCREEN NO. 1 WITH WASHER COMPACTOR SCR-SCR-1101

14"-WWS-DIP — SCR-V-1104

14"-WWS-DIP — SCR-V-2003

1/2"-NAOH-CS-02

NAOH-V-0001

NAOH-V-0002

8"-FA-PVC-01 — BC 23-I-001 — TO ODOR CONTROL — NOTE 5

NAOH-V-0003

12"-WWS-DIP — BD 31-I-001 — TO BNR

8"-FA-PVC-01 — BB 23-I-001 — TO ODOR CONTROL — NOTE 5

CONVEYOR AND DISCHARGE CHUTE SCR-COS-0001

SCREENING CONTAINER SCR

NOTES:

1. SEE LEGEND AND ABBREVIATIONS ON DRAWING 00-I-001, 00-I-002 AND 00-I-003.
2. AREA CODE IS 22 UNLESS OTHERWISE NOTED. SYSTEM CODE IS SCR UNLESS OTHERWISE NOTED.
3. LOCAL CONTROL DEVICES SUCH AS INDICATING LIGHTS AND SWITCHES, LOCATED IN MCC's OR AT DRIVEN EQUIPMENT MAY NOT INDICATED ON THIS P&ID.
4. FOR DRAWING CLARITY, VALVE TAG NUMBER ONLY SHOW THE SEQUENCE NUMBER UNLESS OTHERWISE NOTED.
5. SEE HVAC/ MECHANICAL SPECIFICATION FOR ADDITIONAL DETAILS ON ODOR CONTROL DUCTING.

* ITEM FURNISHED BY PACKAGED FINE SCREENS SUPPLIER.

60% SUBMITTAL - NOT FOR CONSTRUCTION

NO.	DATE	REVISIONS AND RECORD OF USE	BY	CHK	APP
B	7/30/2019	60% SUBMITTAL	BLB	TAH	EVB
A	3/5/2019	30% SUBMITTAL	BLB	TAH	EVB

BLACK & VEATCH
JOINT VENTURE
FILANC
BLACK & VEATCH

CITY OF MORRO BAY
MORRO BAY WATER RECLAMATION FACILITY (WRF)

HEADWORKS AREA - FINE SCREENS
P&ID
SAFE DIVERSION BOX & FINE SCREENS

DESIGNED: BLB,TDE
DETAILED: PVR
CHECKED: TAH
APPROVED:
DATE:

0 1/2 1
IF THIS BAR DOES NOT MEASURE 1" THEN DRAWING IS NOT TO FULL SCALE

PROJECT NO. 400530

22-I-001
SHEET OF

PLOTTED: 29-07-2019 16:37:08
D400530

PCS HMI

21-CTRL-RIO-0001

RUNNING YIR 0001 | FAIL YA 0002 | IN AUTO YI 0002 | DIFF. RESSURE PDAL 2001

RUNNING YIR 0001 | FAIL YA 0002 | IN AUTO YI 0002 | LOW LEVEL LAL 0001

pH AI 0001

RUNNING YIR 0001 | IN REMOTE YI 0001 | COMMON FAIL UA 0001 | RUN CMD UCR 0001

RUNNING YIR 0001 | FAIL YA 0002 | IN AUTO YI 0002

LOW LEVEL LAL 0002 | LOW TEMP TAL 0001 | HIGH TEMP TAH 0002

HEADWORKS, SAFE DIVERSION BOX & FINE SCREENS ODOR SYSTEM CONTROL PANEL
23-ODC-LCP-0001 (WITH LOCAL STARTERS/DRIVES) *

480V

ODOR CONTROL PACKAGE SKID / PLATFORM

VENT

PDG 0001 | LSL 0002 | TG 0001 | PDG 0002 | TG 0002

FS 0001

M — VBM-V-0014

HUMIDIFICATION

ODOR CONTROL SYSTEM NO. 1
ODC-SCU-0001

STAGE 1: HUMIDIFIER | STAGE 2: BIOFILTER

PG 1002

FG 1002

2"-DRN-PVC-01

TSH 0001 | TSL 0002

TO SEWER

2"-DRN-PVC-01

BIOFILTER IRRIGATION

SUMP MAKEUP

AC 21-I-001 — FROM PACKAGED HEADWORKS NO. 1 — 10"-FA-PVC-01

AH 21-I-002 — FROM PACKAGED HEADWORKS NO. 2 — 10"-FA-PVC-01

BB 22-I-001 — FROM SAFE SYSTEM DIVERSION BOX — 8"-FA-PVC-01

BC 22-I-001 — FROM FINE SCREENS — 8"-FA-PVC-01

14"-FA-PVC-01

PDIT 0001

ODC-V-0002

ODC-V-0003

ODOR CONTROL PRE-FILTER ODC-AF-1001

DRAIN

PDSL 0001

FAN ENCLOSURE

ODOR CONTROL FAN NO. 1 ODC-FAN-0001

DRAIN

ODC-V-1001

PG 0001 | PG 0002 | AIT 0001 — 24V | AE 0001 — PH

ODC-V-0013

ODC-V-0011

ODC-V-0012

RECIRCULATION PUMP ODC-P-0001

FROM PLANT WATER

FG 1001

M — ODC-V-0009 — W2

PG 1001 | FIT 1001 | FE 1001 | FS 1001

M — ODC-V-0010

WATERBOX

NOTES:

1. SEE LEGEND AND ABBREVIATIONS ON DRAWINGS 00-I-001, 00I-002 AND 00-I-003.
2. AREA CODE IS 23 UNLESS OTHERWISE NOTED. SYSTEM CODE IS ODC UNLESS OTHERWISE NOTED.
3. LOCAL CONTROL DEVICES SUCH AS INDICATING LIGHTS AND SWITCHES, LOCATED ON MCCs OR AT DRIVEN EQUIPMENT, MAY NOT BE SHOWN ON THIS P&ID.

* ITEM FURNISHED BY PACKAGED ODOR CONTROL SYSTEM SUPPLIER.

60% SUBMITTAL- NOT FOR CONSTRUCTION

NO.	DATE	REVISIONS AND RECORD OF USE	BY	CHK	APP
	7/30/2019	60% SUBMITTAL	BLB	TAH	EVB
A	3/5/2019	30% SUBMITTAL	BLB	TAH	EVB

BLACK & VEATCH

JOINT VENTURE

FILANC

BLACK & VEATCH

CITY OF MORRO BAY
MORRO BAY WATER RECLAMATION FACILITY (WRF)

HEADWORKS AREA - ODOR CONTROL P&ID
ODOR CONTROL SYSTEM

DESIGNED: BLB, TDE
DETAILED: PVR
CHECKED: TAH
APPROVED:
DATE:

0 1/2 1

IF THIS BAR DOES NOT MEASURE 1" THEN DRAWING IS NOT TO FULL SCALE

PROJECT NO. 400530

23-I-001
SHEET OF

PLOTTED: 30-07-2019 15:57:55

D400530

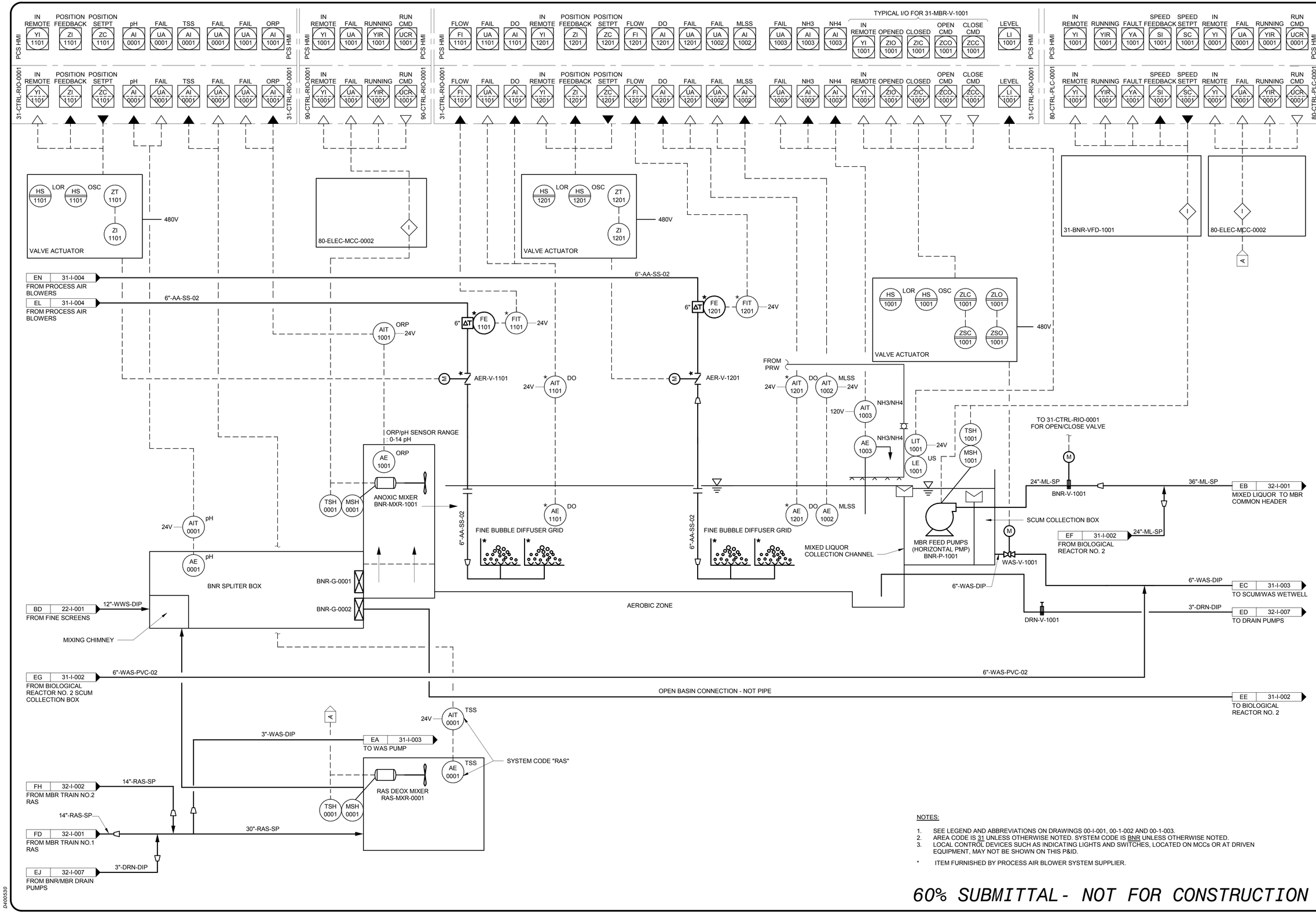

NOTES:

1. SEE LEGEND AND ABBREVIATIONS ON DRAWINGS 00-I-001, 00-1-002 AND 00-1-003.
2. AREA CODE IS 31 UNLESS OTHERWISE NOTED. SYSTEM CODE IS BNR UNLESS OTHERWISE NOTED.
3. LOCAL CONTROL DEVICES SUCH AS INDICATING LIGHTS AND SWITCHES, LOCATED ON MCCs OR AT DRIVEN EQUIPMENT, MAY NOT BE SHOWN ON THIS P&ID.

* ITEM FURNISHED BY PROCESS AIR BLOWER SYSTEM SUPPLIER.

60% SUBMITTAL - NOT FOR CONSTRUCTION

NO.	DATE	REVISIONS AND RECORD OF USE	BY	CHK	APP
B	7/30/2019	60% SUBMITTAL	BLB	TAH	EVB
A	3/5/2019	30% SUBMITTAL	BLB	TAH	EVB

BLACK & VEATCH

JOINT VENTURE

FILANC

BLACK & VEATCH

CITY OF MORRO BAY
MORRO BAY WATER RECLAMATION FACILITY (WRF)

TREATMENT AREA - BNR BASINS
P&ID
BASIN 1 & RAS DEOX

DESIGNED:	BLB, KEZ
DETAILED:	PVR
CHECKED:	TAH
APPROVED:	
DATE:	

0 1/2 1

IF THIS BAR DOES NOT MEASURE 1" THEN DRAWING IS NOT TO FULL SCALE

PROJECT NO. 400530

31-I-001

SHEET OF

PLOTTED: 30-07-2019 14:41:19

D400530

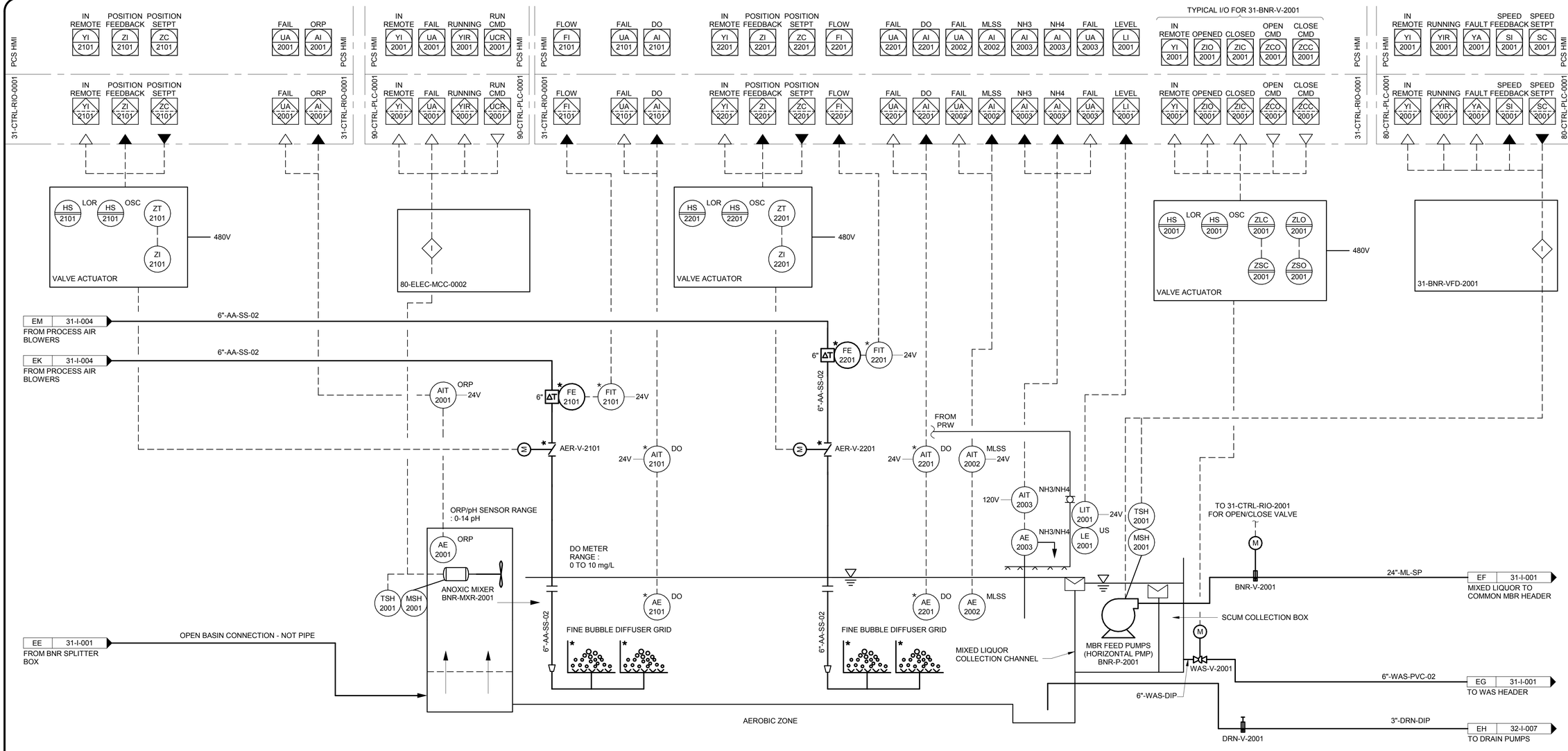

NOTES:

1. SEE LEGEND AND ABBREVIATIONS ON DRAWINGS 00-I-001, 00-1-002 AND 00-1-003.
2. AREA CODE IS 31 UNLESS OTHERWISE NOTED. SYSTEM CODE IS BNR UNLESS OTHERWISE NOTED.
3. LOCAL CONTROL DEVICES SUCH AS INDICATING LIGHTS AND SWITCHES, LOCATED ON MCCs OR AT DRIVEN EQUIPMENT, MAY NOT BE SHOWN ON THIS P&ID.

* ITEM FURNISHED BY PROCESS AIR BLOWER SYSTEM SUPPLIER.

60% SUBMITTAL - NOT FOR CONSTRUCTION

NO.	BY	CHK	APP
B	BLB	TAH	EVB
A	BLB	TAH	EVB

DATE	REVISIONS AND RECORD OF USE
7/30/2019	60% SUBMITTAL
3/5/2019	30% SUBMITTAL

BLACK & VEATCH

JOINT VENTURE

FILANC

CITY OF MORRO BAY
MORRO BAY WATER
RECLAMATION FACILITY (WRF)

TREATMENT AREA - BNR BASINS
P&ID
BASIN 2

DESIGNED: BLB, KEZ
DETAILED: PVR
CHECKED: TAH
APPROVED:
DATE:

0 1/2 1

IF THIS BAR DOES NOT MEASURE 1" THEN DRAWING IS NOT TO FULL SCALE

PROJECT NO.
400530

31-I-002
SHEET
OF

PLOTTED: 30-07-2019 14:41:19
D400530

PCS HMI | 31-CTRL-RIO-0001 | 80-CTRL-PLC-0001

OPEN CMD ZCO 0002 | FLOW FI 0001 | LO-LO LEVEL LALL 0001 | HI-HI LEVEL LAHH 0001 | LEVEL LI 0001

IN REMOTE YI 0001 | RUNNING YIR 0001 | FAULT YA 0001 | SPEED FEEDBACK SI 0001 | SPEED SETPT SC 0001

80-ELEC-MCC-0002
31-SCM-VFD-0001

80-ELEC-MCC-0002
31-WAS-VFD-0001

FLOW FI 0002

FROM PRW
PRW-V-0001
PRW-V-0002
1"-PRW-PVC-02
1"-PRW-PVC-02
1"-PRW-PVC-02

LSHH 0001 US
LIT 0001 RAD 24V
LE 0001 RAD
LSLL 0001
SCUM/WAS WETWELL

EC 31-I-001
FROM SCUM COLLECTION BOX
6"-WAS-DIP

EA 31-I-001
FROM MBR RAS
3"-WAS-DIP

WAS-V-0001

FIT 0001 24V
FE 0001
M
2"

PSL 0001 PG 0001
SCM-V-0001
3"-WAS-DIP
WAS-V-0002
WAS-V-0013
SCUM PUMP
SCM-P-0001

WAS-V-0003
3"-WAS-DIP

PSL 0001 PG 0001
WAS-V-0004
3"-WAS-DIP
3"-WAS-DIP
WAS-V-0005

WAS PUMP
WAS-P-0001

WAS-V-0003
PG 0002
PSH 0002
RUPTURE DISC
SCM-RD-0001
SCM-V-0002
SCM-V-0004
3"-WAS-DIP
SCM-V-0005
SCM-V-0007
1'"-WAS-DIP
SCM-V-0006
D

WAS-V-0057
PG 0002
PSH 0002
RUPTURE DISC
WAS-RD-0001
WAS-V-0006
WAS-V-0008
3"-WAS-DIP
WAS-V-0009
WAS-V-0011
1'"-WAS-DIP
WAS-V-0010
D

FIT 0002 24V
FE 0002
M
2"
3"-WAS-DIP
WAS-V-0012
3"-WAS-DIP
3"-WAS-PVC-02
A/G B/G
EI 71-I-001
TO SLUDGE HOLDING TANKS

NOTES:

1. SEE LEGEND AND ABBREVIATIONS ON DRAWINGS 00-I-001, 00-1-002 AND 00-1-003.
2. AREA CODE IS 31 UNLESS OTHERWISE NOTED. SYSTEM CODE IS WAS UNLESS OTHERWISE NOTED.
3. LOCAL CONTROL DEVICES SUCH AS INDICATING LIGHTS AND SWITCHES, LOCATED ON MCCs OR AT DRIVEN EQUIPMENT, MAY NOT BE SHOWN ON THIS P&ID.

60% SUBMITTAL- NOT FOR CONSTRUCTION

NO.	BY	CHK	APP
B	BLB	TAH	EVB
A	BLB	TAH	EVB

DATE	REVISIONS AND RECORD OF USE
7/30/2019	60% SUBMITTAL
3/5/2019	30% SUBMITTAL

BLACK & VEATCH
JOINT VENTURE
FILANC
BLACK & VEATCH

CITY OF MORRO BAY
MORRO BAY WATER
RECLAMATION FACILITY (WRF)

TREATMENT AREA - BNR BASINS
P&ID
WAS SYSTEM

DESIGNED: BLB, KEZ
DETAILED: PVR
CHECKED: TAH
APPROVED:
DATE:

0 1/2 1
IF THIS BAR DOES NOT MEASURE 1" THEN DRAWING IS NOT TO FULL SCALE

PROJECT NO. 400530

31-I-003
SHEET
OF

PLOTTED: 30-07-2019 14:41:19
D400530

PCS HMI

31-CTRL-RIO-0001

SPEED CONTROL SC 0101 | SPEED INDCTN SI 0101 | WARNING YA 0101 | IN REMOTE YI 0101 | FAULT YA 0101 | RUNNING YIR 0101 | RUN CMD UCR 0101 | MOTOR CURRENT II 0101

SPEED CONTROL SC 0201 | SPEED INDCTN SI 0201 | WARNING YA 0201 | IN REMOTE YI 0201 | FAULT YA 0201 | RUNNING YIR 0201 | RUN CMD UCR 0201 | MOTOR CURRENT II 0201

SPEED CONTROL SC 0301 | SPEED INDCTN SI 0301 | WARNING YA 0301 | IN REMOTE YI 0301 | FAULT YA 0301 | RUNNING YIR 0301 | RUN CMD UCR 0301 | MOTOR CURRENT II 0301

PRESSURE PI 0001

80-ELEC-MCC-0002

FAIL YA | RUN YL | START HS | STOP HS | LOR HS | PWR ON YL | TAH | PDAH | PAH

* LOCAL BLOWER CONTROL PANEL 31-AER-LCP-0101

* LOCAL BLOWER CONTROL PANEL 31-AER-LCP-0201

* LOCAL BLOWER CONTROL PANEL 31-AER-LCP-0301

* PDSH 0101 | * PDI 0101 | AER-V-0101 | AER-V-0102 | AIR FILTER AER-FLT-0101 | * S | DRY SCREW PROCESS AIR BLOWER NO. 1 AER-BL-0101 | * TG 0101 | * TSH 0101 | AER-V-0104 | * PG 0101 | * PSH 0101 | AER-V-0105 | AER-V-0106 | 8"-AA-SS-02 | AER-V-0107

* PDSH 0201 | * PDI 0201 | AER-V-0201 | AER-V-0202 | AIR FILTER AER-FLT-0201 | * S | DRY SCREW PROCESS AIR BLOWER NO. 2 AER-BL-0201 | * TG 0201 | * TSH 0201 | AER-V-0204 | * PG 201 | * PSH 201 | AER-V-0205 | AER-V-0206 | 8"-AA-SS-02 | AER-V-0207

* PDSH 0301 | * PDI 0301 | AER-V-0301 | AER-V-0302 | AIR FILTER AER-FLT-0301 | * S | DRY SCREW PROCESS AIR BLOWER NO. 3 AER-BL-0301 | * TG 0301 | * TSH 0301 | AER-V-0304 | * PG 0302 | * PSH 0302 | AER-V-0305 | AER-V-0306 | 8"-AA-SS-02 | AER-V-0307

10"-AA-SS-02

* PIT 0001 | AER-V-0001

6"-AA-SS-02 | EK | 31-I-002 | TO BNR TRAIN NO. 2 ZONE 2

6"-AA-SS-02 | EL | 31-I-001 | TO BNR TRAIN NO. 1 ZONE 2

6"-AA-SS-02 | EM | 31-I-002 | TO BNR TRAIN NO. 2 ZONE 1

6"-AA-SS-02 | EN | 31-I-001 | TO BNR TRAIN NO. 1 ZONE 1

PROCESS AIR BLOWER SKID (TYP)

NOTES:

1. SEE LEGEND AND ABBREVIATIONS ON DRAWINGS 00-I-001, 00I-002 AND 00-I-003
2. LOCAL CONTROL DEVICES SUCH AS INDICATING LIGHTS AND SWITCHES, LOCATED ON MCCs OR AT DRIVEN EQUIPMENT, MAY NOT BE SHOWN ON THIS P&ID.
3. AREA CODE IS 31 UNLESS OTHERWISE NOTED. SYSTEM CODE IS AER UNLESS OTHERWISE NOTED.
4. INLET/FILTER/SILENCER, DRIVE, PANEL, BLOWER UNIT, SHALL ALL BE PROVIDED BY THE BLOWER MANUFACTURER, AS DESCRIBED IN SECTION 11370.

* ITEM FURNISHED BY PROCESS AIR BLOWER SYSTEM SUPPLIER.

60% SUBMITTAL- NOT FOR CONSTRUCTION

NO.	BY	CHK	APP	DATE	REVISIONS AND RECORD OF USE
B	BLB	TAH	EVB	7/30/2019	60% SUBMITTAL
A	BLB	TAH	EVB	3/5/2019	30% SUBMITTAL

BLACK & VEATCH

JOINT VENTURE

FILANC

BLACK & VEATCH

CITY OF MORRO BAY
MORRO BAY WATER RECLAMATION FACILITY (WRF)

TREATMENT AREA - BNR BASINS
P&ID
PROCESS AIR BLOWERS

DESIGNED: BLB, KEZ
DETAILED: PVR
CHECKED: TAH
APPROVED:
DATE:

0 1/2 1
IF THIS BAR DOES NOT MEASURE 1" THEN DRAWING IS NOT TO FULL SCALE

PROJECT NO. 400530

31-I-004
SHEET
OF

PLOTTED: 30-07-2019 14:41:20
D400530

PCS HMI
31-CTRL-RIO-0001
IN REMOTE YI 1001
OPENED ZIO 1001
CLOSED ZIC 1001
OPEN CMD ZCO 1001
CLOSE CMD ZCC 1001
*32-MBR-LCP-0001
OPEN CMD ZCO 1002
HI-HI LEVEL LAHH 1002
IN REMOTE YI 1001
POSITION FEEDBACK ZI 1001
POSITION SETPT ZC 1001
HI-HI LEVEL LAHH 1001
LO-LO LEVEL LALL 1001
LEVEL LI 1001
*31-CTRL-RIO-0001
LEVEL LI 1002
TYPICAL I/O & CONTROLS FOR ON-OFF VALVE
FLOW FI 1001
LOR HS 1001
OSC HS 1001
ZLC 1001
ZLO 1001
ZSC 1001
ZSO 1001
VALVE ACTUATOR
AIR SUPPLY ASSEMBLY *
P 31-I-013
INSTRUMENT AIR
1"-IA-CU-XX
IA-V-1001
AIR FILTER IA-FLT-1001
0"-IA-CU-XX
IA-V-1002
EJECTOR ASSEMBLY *
SEE TYPICAL I/O & CONTROLS
MEM-V-1003
MEM-V-1001
VACUUM EJECTOR (FOR PRIMING)
MEM-V-1002
BY MBR SUPPLIER
BY GENERAL CONTRACTOR
D
1"-CA-PVC-02
FA 32-I-002
CITRIC ACID SOLUTION TO MEMBRANE BASIN NO. 2
PLANT PIPING
YARD PIPING
1"-NACL-CPVC-02
FB 32-I-002
SODIUM HYPOCHLORITE TO MEMBRANE BASIN NO. 2
3/4"-CA-PE-06
90-I-006 UO
CITRIC ACID SOLUTION
1"-CA-PVC-01
SEE TYPICAL I/O & CONTROLS
CA-V-1001
NOCL-V-1001
CA-V-1002
NOCL-V-1002
CA-V-1003
NOCL-V-1003
3/4"-NACL-TEFL-01
90-I-002 UG
SODIUM HYPOCHLORITE SOLUTION
10"-MFF-SS-04
FC 32-I-003
FILTRATE/CIP SOLUTION TO/FROM PROCESS PUMP
MEM-V-1102
MEM-V-1202
6"-MFF-SS-04
LSHH 1002
LSHH 1001
LE 1001
US
LSLL 1001
LIT 1001
24V
LIT 1002
LE 1002
RAS WEIR
RAS COLLECTION CHANNEL NO. 1
FIT 1001
FE 1001
M
14"
14"-RAS-SP
RAS-V-1001
FD 31-I-001
TO RAS DEOX
SEE TYPICAL I/O & CONTROLS
EB 31-I-001
MIXED LIQUOR FROM BIOLOGICAL REACTOR
36"-ML-SP
24"-ML-SP
MEM-V-1001
24"-ML-SP
* INFLUENT MAINFOLD
CASSETTE A-1 MEM
CASSETTE A-2 MEM
3"-AS-SS-02
AIR-V-1101
AIR-V-1201
3"-DRN-DIP
FE 32-I-007
MIXED LIQUOR TO DRAIN PUMPS
24"-ML-SP
FF 32-I-002
TO MEMBRANE BASIN NO. 2
FM 32-I-006
AIR FROM BLOWER MEMBRANE
6"-AS-SS-02
BY GENERAL CONTRACTOR
BY MBR SUPPLIER
* AIR-V-1001

NOTES :
1. SEE LEGEND AND ABBREVIATIONS ON DRAWINGS 00-I-001, 00-I-002 AND 00-I-003.
2. AREA CODE IS 32 UNLESS OTHERWISE NOTED. SYSTEM CODE IS MEM UNLESS OTHERWISE NOTED.
3. LOCAL CONTROL DEVICES SUCH AS INDICATING LIGHTS AND SWITCHES, LOCATED ON MCCs OR AT DRIVEN EQUIPMENT, MAY NOT BE SHOWN ON THIS P&ID.
4. DRAWING TYPICAL FOR EVERY MEMBRANE TRAIN, WITH EXCEPTION OF COMMON PIPES.

* ITEM FURNISHED BY MBR SYSTEM SUPPLIER.

60% SUBMITTAL - NOT FOR CONSTRUCTION

NO.	BY	CHK	APP	DATE	REVISIONS AND RECORD OF USE
B	BLB	TAH	EVB	7/30/2019	60% SUBMITTAL
A	BLB	TAH	EVB	3/5/2019	30% SUBMITTAL

BLACK & VEATCH
JOINT VENTURE
BLACK & VEATCH
FILANC

CITY OF MORRO BAY
MORRO BAY WATER
RECLAMATION FACILITY (WRF)

TREATMENT AREA - MBR SYSTEM
P&ID
MEMBRANE BASIN 1

DESIGNED: BLB, KEZ
DETAILED: PVR
CHECKED: TAH
APPROVED:
DATE:

0 1/2 1
IF THIS BAR DOES NOT MEASURE 1" THEN DRAWING IS NOT TO FULL SCALE

PROJECT NO. 400530

32-I-001
SHEET
OF

PLOTTED: 30-07-2019 14:41:20
D400530

PCS HMI
31-CTRL-RIO-0001
*32-MBR-LCP-0001

IN REMOTE YI 2001 | OPENED ZIO 2001 | CLOSED ZIC 2001 | OPEN CMD ZCO 2001 | CLOSE CMD ZCC 2001

OPEN CMD ZCO 2002

HI-HI LEVEL LAHH 2002

IN REMOTE YI 2001 | POSITION FEEDBACK ZI 2001 | POSITION SETPT ZC 2001

HI-HI LEVEL LAHH 2001 | LO-LO LEVEL LALL 2001 | LEVEL LI 2001

LEVEL LI 2002

TYPICAL I/O & CONTROLS FOR ON-OFF VALVE

IN REMOTE YI 2001 | OPENED ZIO 2001 | CLOSED ZIC 2001 | OPEN CMD ZCO 2001 | CLOSE CMD ZCC 2001

FLOW FI 2001

LOR HS 2001 | OSC HS 2001 | ZLC 2001 | ZLO 2001 | ZSC 2001 | ZSO 2001
VALVE ACTUATOR

AIR SUPPLY ASSEMBLY *
FROM COMPRESSORS (IF REQUIRED)
1"-IA-CU
IA-V-2001
AIR FILTER IA-FLT-2001
1"-IA-CU
IA-V-2002

EJECTOR ASSEMBLY *
SEE TYPICAL I/O & CONTROLS
MEM-V-2003
MEM-V-2001
VACUUM EJECTOR (FOR PRIMING)
MEM-V-2002
YD

SEE TYPICAL I/O & CONTROLS
1"-CA-PVC-02 | 32-I-001 | FA
FROM CITRIC ACID SOLUTION
1"-NACL-CPVC-02 | 32-I-001 | FB
FROM SODIUM HYPOCHLORITE
CA-V-2001 NOCL-V-2001
CA-V-2002 NOCL-V-2002
CA-V-2003 NOCL-V-2003

10"-MFF-SS-04 | FG | 32-I-004
FILTRATE/CIP SOLUTION TO/FROM PROCESS PUMP

BY MBR SUPPLIER | BY GENERAL CONTRACTOR

MEM-V-2101
6"-MFF-SS-04
MEM-V-2201
6"-MFF-SS-04

LSHH 2001 / LE 2001 (US)
LSLL 2001 / LE 2001 (US)
LIT 2001 / LE 2001 (US) — 24V
LIT 2002 / LE 2002 (US) — 24V
FIT 2001 — 24V

SEE TYPICAL I/O & CONTROLS
FE 2001
M 14"
14"-RAS-SP
RAS-V-2001
FH | 31-I-001 | TO RAS DEOX

RAS WEIR
RAS COLLECTION CHANNEL NO. 2

LSHH 2002

FF | 32-I-001 | FROM MIXED LIQUOR HEADER
24"-ML-SP
MEM-V-2001

CASSETTE B-1 MEM
CASSETTE B-2 MEM

* INFLUENT MAINFOLD

3"-DRN-DIP | FI | 32-I-007 | MIXED LIQUOR TO DRAIN PUMPS

3"-AS-SS-02
AIR-V-2101
3"-AS-SS-02
AIR-V-2201

FN | 32-I-006 | AIR FROM BLOWER MEMBRANE
6"-AS-SS-02
AIR-V-2001
6"-AS-SS-02

BY GENERAL CONTRACTOR | BY MBR SUPPLIER

NOTES :
1. SEE LEGEND AND ABBREVIATIONS ON DRAWINGS 00-I-001, 00-I-002 AND 00-I-003.
2. AREA CODE IS 32 UNLESS OTHERWISE NOTED. SYSTEM CODE IS MEM UNLESS OTHERWISE NOTED.
3. LOCAL CONTROL DEVICES SUCH AS INDICATING LIGHTS AND SWITCHES, LOCATED ON MCCs OR AT DRIVEN EQUIPMENT, MAY NOT BE SHOWN ON THIS P&ID.
4. DRAWING TYPICAL FOR EVERY MEMBRANE TRAIN, WITH EXCEPTION OF COMMON PIPES.

* ITEM FURNISHED BY MBR SYSTEM SUPPLIER

60% SUBMITTAL- NOT FOR CONSTRUCTION

NO.	BY	CHK	APP	DATE	REVISIONS AND RECORD OF USE
B	BLB	TAH	EVB	7/30/2019	60% SUBMITTAL
A	BLB	TAH	EVB	3/5/2019	30% SUBMITTAL

BLACK & VEATCH JOINT VENTURE FILANC BLACK & VEATCH

CITY OF MORRO BAY
MORRO BAY WATER RECLAMATION FACILITY (WRF)

TREATMENT AREA - MBR SYSTEM
P&ID
MEMBRANE BASIN 2

DESIGNED: BLB, KEZ
DETAILED: PVR
CHECKED: TAH
APPROVED:
DATE:

0 1/2 1
IF THIS BAR DOES NOT MEASURE 1" THEN DRAWING IS NOT TO FULL SCALE

PROJECT NO. 400530

32-I-002
SHEET OF

PLOTTED: 30-07-2019 14:41:21
D400530

PCS HMI

31-CTRL-RIO-0001

PRESSURE PI 1001

IN REMOTE YI 1005 | OPENED ZIO 2001 | CLOSED ZIC 2001 | OPEN CMD ZCO 2001 | CLOSE CMD ZCC 2001

IN REMOTE YI 1001 | RUNNING YIR 1001 | AFD FAULT YA 1001 | SPEED FEEDBACK SI 1001 | SPEED SETPT SC 1001

FLOW FI 1001

OPEN CMD ZCO 1014

TURB AI 1001 | FAIL YA 1001

LOR HS 1005 | OSC HS 1005 | ZLC 1005 | ZLO 1005 | ZSC 1005 | ZSO 1005

VALVE ACTUATOR

* VFD-1001

PIT 1001 — MEM-V-1004

FC 32-I-001
FILTRATE/CIP WATER SOLUTION FROM/TO MEMBRANES

10"-MFF-SS-04

M — MEM-V-1005

MEM-V-1006 — DRAIN — D

PSH 1001 | PSL 1001 | PG 1001 — MEM-V-1007

RUPTURE DISK — MEM-RD-1001

TSH 1001

FILTRATE PUMP MEM-P-1001

MEM-V-1009

MEM-V-1008

PSH 1002 | PSL 1002 | PG 1002 — MEM-V-1010

8"-MFF-SS-04

RUPTURE DISK — MEM-RD-1002

MEM-V-1011 — DRAIN — D

FIT 1001 — 24V

FE 1001 — M — 8" (SEE NOTE 3)

MEM-V-1012

8"-MFF-SS-04

FJ 32-I-005
FILTRATE TO FILTRATE MAINFOLD

1"-MFF-SS-04

24V — AIT 1001 — TURB

AE 1001 — D

FG 1001

MEM-V-1016

MEM-V-1015

S

MEM-V-1013 MEM-V-1014

NOTES:

1. SEE LEGEND AND ABBREVIATIONS ON DRAWINGS 00-I-001, 00-I-002 AND 00-I-003.
2. AREA CODE IS 32 UNLESS OTHERWISE NOTED. SYSTEM CODE IS MEM UNLESS OTHERWISE NOTED.
3. LOCAL CONTROL DEVICES SUCH AS INDICATING LIGHTS AND SWITCHES, LOCATED ON MCCs OR AT DRIVEN EQUIPMENT, MAY NOT BE SHOWN ON THIS P&ID.
4. PRIMING SYSTEM CONNECTION AND PRESSURE TRANSMITTER MUST BE LOCATED AT HIGH POINT OF MEMBRANE TANK HEADER.

* ITEM FURNISHED BY MBR SYSTEM SUPPLIER.

60% SUBMITTAL - NOT FOR CONSTRUCTION

NO.	BY	CHK	APP	DATE	REVISIONS AND RECORD OF USE
B	BLB	TAH	EVB	7/30/2019	60% SUBMITTAL
A	BLB	TAH	EVB	3/5/2019	30% SUBMITTAL

BLACK & VEATCH JOINT VENTURE — FILANC — BLACK & VEATCH

CITY OF MORRO BAY
MORRO BAY WATER RECLAMATION FACILITY (WRF)

TREATMENT AREA - MBR SYSTEM
P&ID
FILTRATE PUMP, BASIN 1

DESIGNED: BLB, KEZ
DETAILED: PVR
CHECKED: TAH
APPROVED:
DATE:

0 1/2 1
IF THIS BAR DOES NOT MEASURE 1" THEN DRAWING IS NOT TO FULL SCALE

PROJECT NO. 400530

32-I-003
SHEET
OF

PLOTTED: 30-07-2019 14:41:21
D400530

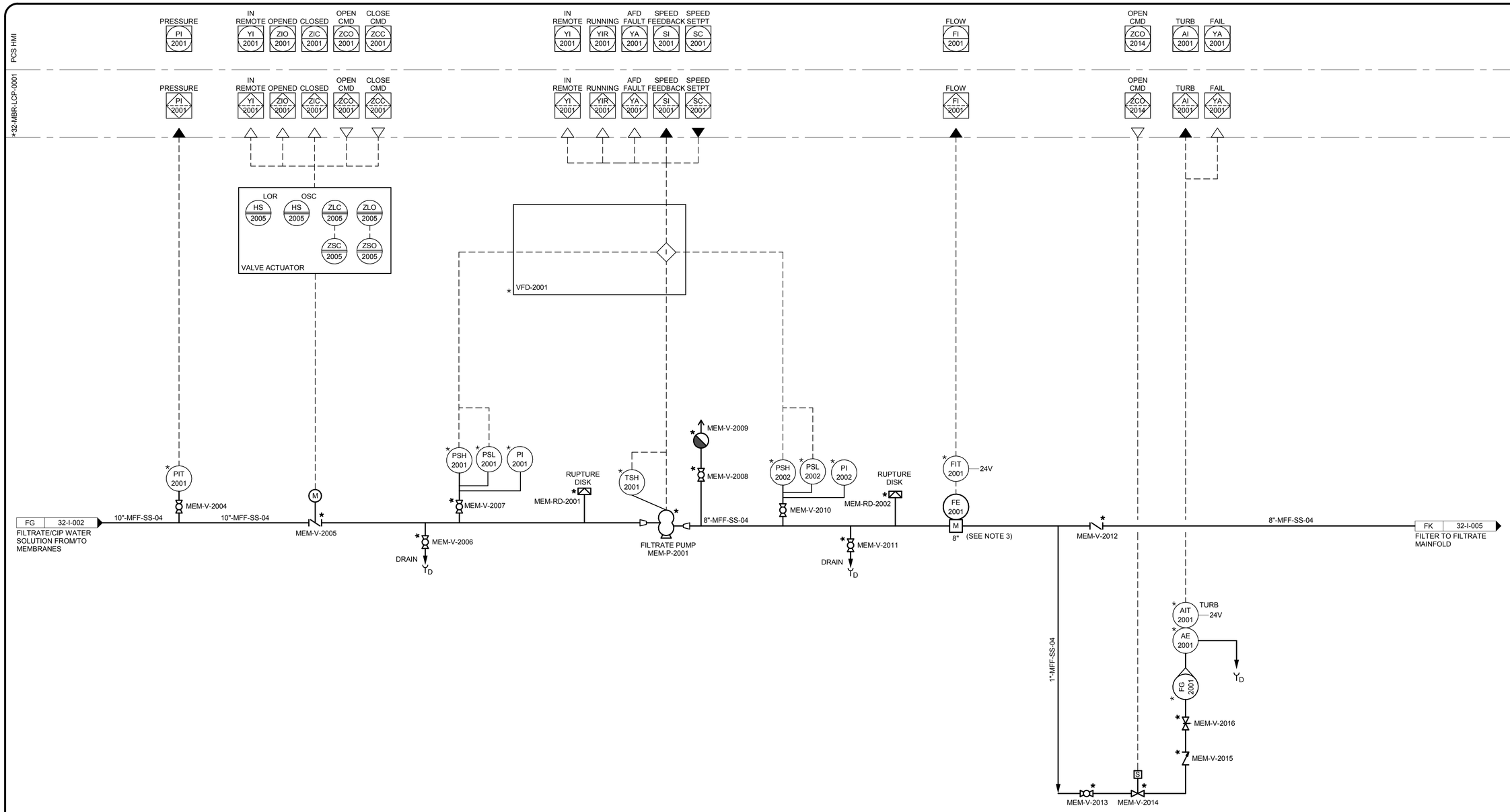

NOTES:

1. SEE LEGEND AND ABBREVIATIONS ON DRAWINGS 00-I-001, 00-I-002 AND 00-I-003.
2. AREA CODE IS 32 UNLESS OTHERWISE NOTED. SYSTEM CODE IS MEM UNLESS OTHERWISE NOTED.
3. LOCAL CONTROL DEVICES SUCH AS INDICATING LIGHTS AND SWITCHES, LOCATED ON MCCs OR AT DRIVEN EQUIPMENT, MAY NOT BE SHOWN ON THIS P&ID.
4. PRIMING SYSTEM CONNECTION AND PRESSURE TRANSMITTER MUST BE LOCATED AT HIGH POINT OF MEMBRANE TANK HEADER.

* ITEM FURNISHED BY MBR SYSTEM SUPPLIER.

60% SUBMITTAL - NOT FOR CONSTRUCTION

NO.	DATE	REVISIONS AND RECORD OF USE	BY	CHK	APP
B	7/30/2019	60% SUBMITTAL	BLB	TAH	EVB
A	3/5/2019	30% SUBMITTAL	BLB	TAH	EVB

BLACK & VEATCH
JOINT VENTURE
FILANC
BLACK & VEATCH

CITY OF MORRO BAY
MORRO BAY WATER
RECLAMATION FACILITY (WRF)

TREATMENT AREA - MBR SYSTEM
P&ID
FILTRATE PUMP, BASIN 2

DESIGNED: BLB, KEZ
DETAILED: PVR
CHECKED: TAH
APPROVED:
DATE:

0 1/2 1
IF THIS BAR DOES NOT MEASURE 1" THEN DRAWING IS NOT TO FULL SCALE

PROJECT NO.
400530

32-I-004
SHEET
OF

PLOTTED: 30-07-2019 14:41:22
D400530

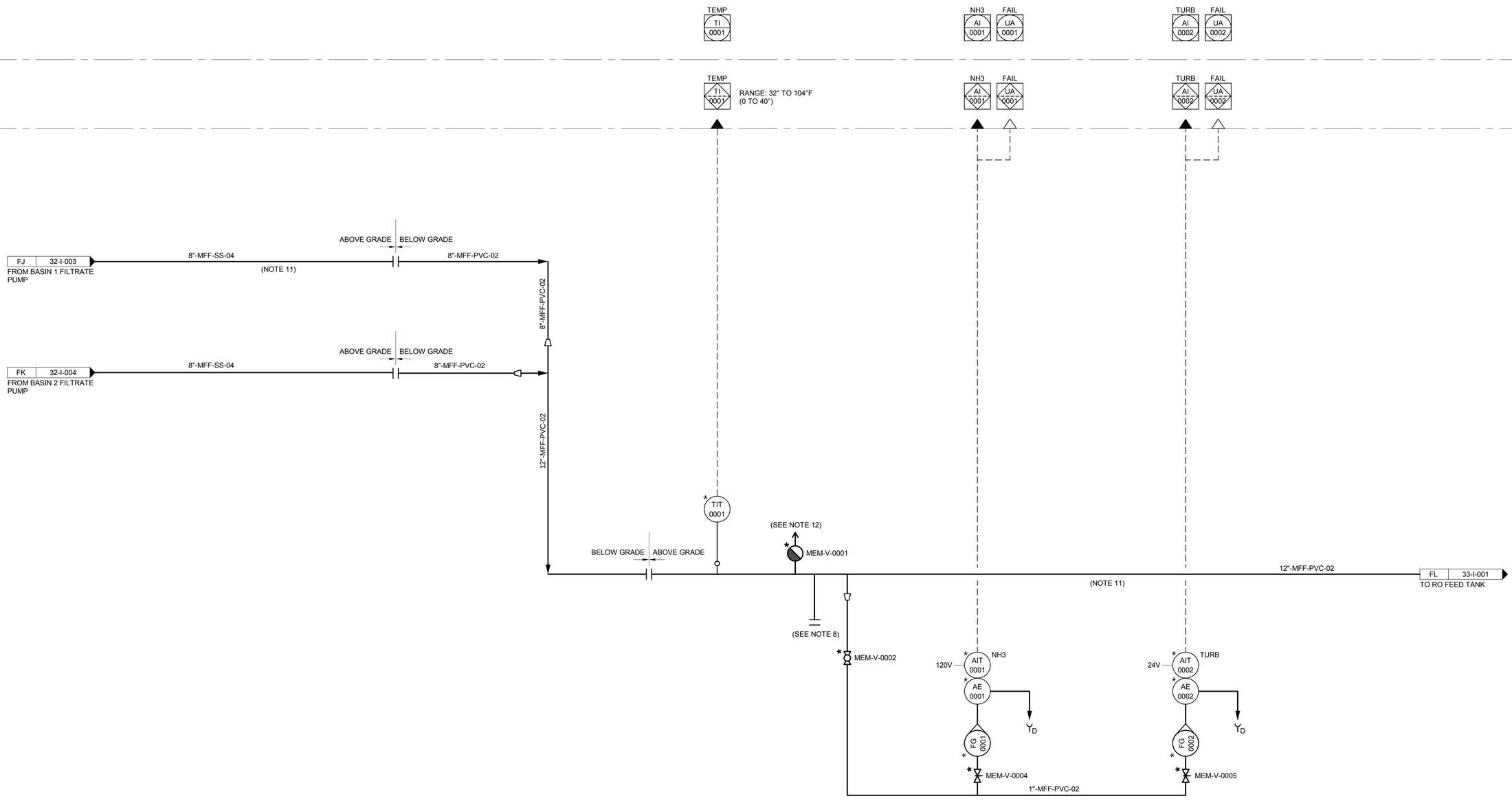

NOTES:

1. SEE LEGEND AND ABBREVIATIONS ON DRAWINGS 00-I-001, 00-I-002 AND 00-I-003.
2. AREA CODE IS 32 UNLESS OTHERWISE NOTED. SYSTEM CODE IS MEM UNLESS OTHERWISE NOTED.
3. LOCAL CONTROL DEVICES SUCH AS INDICATING LIGHTS AND SWITCHES, LOCATED ON MCC's OR AT DRIVEN EQUIPMENT, MAY NOT BE SHOWN ON THIS P&ID.
4. ALL DOTTED-LINES/EQUIPMENT TO BE SUPPLIED BY OTHERS. ----- VERIFICATION OF ANY POSTED VALUES IS THE RESPONSIBILITY OF THE SYSTEM INTEGRATOR.
5. FLOOR DRAINS TO BE PROVIDED AND PIPED INTO BY GENERAL CONTRACTOR, AS REQUIRED.
6. ALL EQUIPMENT ON THIS SHEET IS DESIGNED TO BE INSTALLED IN A NON-CLASSIFIED AREA (PER NFPA 820)
7. PLANT START-UP WATER TO BE ADDED TO TANK THROUGH MANWAY WITH HOSE.
8. CAPPED CONNECTION FOR RECIRCULATION BACK TO THE BIOREACTOR DURING START-UP. TEMPORARY PIPING IS PROVIDED BY OTHERS.
9. VALVE REQUIRED IF PERMEATE DISCHARGE POINT IS BELOW BACKPULSE TANK.
10. FINAL SIZING AND DESIGN TO BE VERIFIED DURING DETAIL PROJECT ENGINEERING.
11. SCH80 PVC IS ACCEPTABLE.
12. COMBINATION VACUUM BREAK/AIR RELEASE, AS REQUIRED.

* ITEM FURNISHED BY MBR SYSTEM SUPPLIER.

60% SUBMITTAL- NOT FOR CONSTRUCTION

NO.	BY	CHK	APP
B	BLB	TAH	EVB
A	BLB	TAH	EVB

REVISIONS AND RECORD OF USE

DATE	
7/30/2019	60% SUBMITTAL
3/5/2019	30% SUBMITTAL

BLACK & VEATCH

JOINT VENTURE

FILANC

CITY OF MORRO BAY
MORRO BAY WATER
RECLAMATION FACILITY (WRF)

TREATMENT AREA - MBR SYSTEM
P&ID
FILTRATE MANIFOLD

DESIGNED: BLB, KEZ
DETAILED: PVR
CHECKED: TAH
APPROVED:
DATE:

0 1/2 1
IF THIS BAR DOES NOT MEASURE 1" THEN DRAWING IS NOT TO FULL SCALE

PROJECT NO.
400530

32-I-005
SHEET
OF

PLOTTED: 30-07-2019 14:41:22
D400530

PCS HMI

*32-MBR-LCP-0001

SPEED CONTROL SC 0101 | SPEED INDCTN SI 0101 | WARNING YA 0101 | IN REMOTE YI 0101 | FAULT YA 0101 | RUNNING YIR 0101 | RUN CMD UCR 0101 | MOTOR CURRENT II 0101

SPEED CONTROL SC 0201 | SPEED INDCTN SI 0201 | WARNING YA 0201 | IN REMOTE YI 0201 | FAULT YA 0201 | RUNNING YIR 0201 | RUN CMD UCR 0201 | MOTOR CURRENT II 0201

FLOW FI 0001 | PRESSURE PI 0001

80-ELEC-MCC-0002

80-ELEC-MCC-0002

MEMBRANE SCOUR BLOWER NO.1 SKID

FAIL YA | RUN YL | START HS | STOP HS | LOR HS | PWR ON YL | TAH | PDAH | PAH

LOCAL BLOWER CONTROL PANEL LCP-0101 (NOTE 9)

FAIL YA | RUN YL | START HS | STOP HS 000 | LOR HS | PWR ON YL | TAH | PDAH | PAH

LOCAL BLOWER CONTROL PANEL LCP-0201 (NOTE 9)

PDSH 0101 | PDI 0101 | PG 0101 | TG 0101 | TSH 0101 | PG 0102 | PSH 0102 | FSL 0101

AIR-V-0101 | AIR-V-0102 | AIR-V-0103 | AIR-V-0104 | AIR-V-0105 | AIR-V-0106 | AIR-V-0107

AIR-FLT-0101

NOTE 4 (TYP)

ROTARY LOBE MEMBRANE SCOUR BLOWER NO. 1 AIR-BL-0101

NOTE 4 (TYP)

6"-AS-SS-02

(SEE NOTE 7)

MEMBRANE SCOUR BLOWER NO.2 SKID

PDSH 0201 | PDI 0201 | PG 0201 | TG 0201 | TSH 0201 | PG 0202 | PSH 0202 | FSL 0201

AIR-V-0201 | AIR-V-0202 | AIR-V-0203 | AIR-V-0204 | AIR-V-0205 | AIR-V-0003 | AIR-V-0207

AIR-FLT-0201

NOTE 4 (TYP)

ROTARY LOBE MEMBRANE SCOUR BLOWER NO. 2 AIR-BL-0201

NOTE 4 (TYP)

6"-AS-SS-02

(SEE NOTE 7)

8"-AS-SS-02

24V

FIT 0001 | PIT 0001 | FE 0001 | AT | AIR-V-0001

8"-AS-SS-02 (SEE NOTE 8)

8"

6"-AS-SS-02

FM 32-I-001 TO MEMBRANE BASIN NO. 1

6"-AS-SS-02

FN 32-I-002 TO MEMBRANE BASIN NO. 2

(SEE NOTE 4)

NOTES:

1. SEE LEGEND AND ABBREVIATIONS ON DRAWING 00-I-001, 00-I-002 AND 00-I-003.
2. AREA CODE IS 32 UNLESS OTHERWISE NOTED. SYSTEM CODE IS AIR UNLESS OTHERWISE NOTED.
3. LOCAL CONTROL DEVICES SUCH AS INDICATING LIGHTS AND SWITCHES, LOCATED IN MCC's OR AT DRIVEN EQUIPMENT MAY NOT INDICATED ON THIS P&ID.
4. SYSTEM INTEGRATOR IS RESPONSIBLE FOR HOT AIR PIPE THERMO-INSULATION AS APPLICABLE.
5. BLOWER FLEXIBLE CONNECTION.
6. ALL EQUIPMENT ON THIS SHEET DESIGNED TO BE INSTALLED IN A NON-CLASSIFIED AREA (PER NFPA 820)
7. A PORTION OF THE AIR LINE NEEDS TO BE HIGHER THAN THE TANK OPERATING LEVEL TO PREVENT WATER BACK FLOW.
8. FINAL SIZING AND DESIGN TO BE VERIFIED DURING PROJECT ENGINEERING.
9. MBR SYSTEM SUPPLIER MAY PROVIDE ONE BLOWER CONTROL PANEL FOR ALL BLOWERS.

* ITEM FURNISHED BY MBR SYSTEM SUPPLIER.

60% SUBMITTAL - NOT FOR CONSTRUCTION

NO.	BY	CHK	APP
B	BLB	TAH	EVB
A	BLB	TAH	EVB

REVISIONS AND RECORD OF USE

DATE	
7/30/2019	60% SUBMITTAL
3/5/2019	30% SUBMITTAL

BLACK & VEATCH

JOINT VENTURE

FILANC

BLACK & VEATCH

CITY OF MORRO BAY
MORRO BAY WATER
RECLAMATION FACILITY (WRF)

TREATMENT AREA - MBR SYSTEM
P&ID
MBR SCOUR AIR BLOWERS

DESIGNED: BLB, KEZ
DETAILED: PVR
CHECKED: TAH
APPROVED:
DATE:

0 1/2 1

IF THIS BAR DOES NOT MEASURE 1" THEN DRAWING IS NOT TO FULL SCALE

PROJECT NO. 400530

32-I-006

SHEET OF

PLOTTED: 30-07-2019 14:41:22

D400530

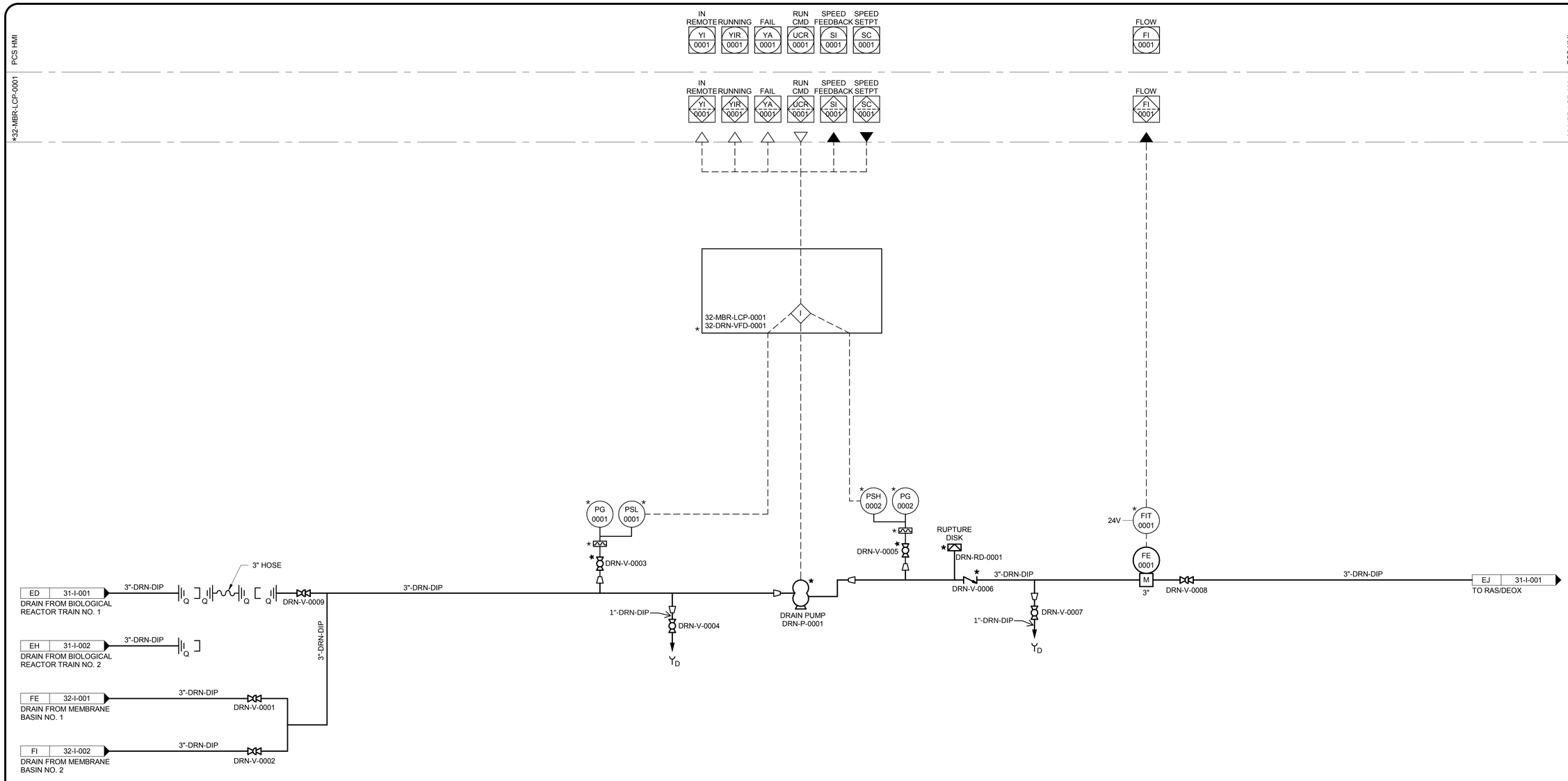

NOTES:

1. SEE LEGEND AND ABBREVIATIONS ON DRAWING 00-I-001, 00-I-002 AND 00-I-003.
2. AREA CODE IS 31 UNLESS OTHERWISE NOTED. SYSTEM CODE IS DRN UNLESS OTHERWISE NOTED.
3. LOCAL CONTROL DEVICES SUCH AS INDICATING LIGHTS AND SWITCHES, LOCATED ON MCC's OR AT DRIVEN EQUIPMENT, MAY NOT BE SHOWN ON THIS P&ID.
4. FLOOR DRAINS TO BE PROVIDED AND PIPED INTO BY GENERAL CONTRACTOR, AS REQUIRED.
5. BUTTERFLY VALVES ARE USED ON WASTE WATER AND MIXED LIQUOR SERVICES
6. DESIGN ENGINEER TO BE INSURE THERE ENOUGH BACK PRESSURE IN THIS LINE IN TO ALLOW FOR WAS REMOVAL REFER TO NEXT NOTE FOR MORE DETAILS.
7. OPTIONAL VALVE CAN BE ACTUATED TO BE ABLE TO AUTOMATICALLY THROTTLE THE LINE IN ORDER TO CREATE BACK PRESSURE FOR SLUDGE WASTING - REFER TO PREVIOUS NOTE.
8. 5 PIPES DIAMETERS UPSTREAM, 3 PIPE DIAMETERS DOWN STREAM, STRAIGHT PIE RUN RECOMMENDED FOR MAXIMUM ACCURACY. PIPE MUST BE ARRANGED SO MAG IS ALWAYS FLOODED.
9. ALL EQUIPMENT ON THIS SHEET IS DESIGNED TO BE INSTALLED IN A NON-CLASSIFIED AREA (PER NFPA 820).

* ITEM FURNISHED BY MBR SYSTEM SUPPLIER.

60% SUBMITTAL - NOT FOR CONSTRUCTION

NO.	BY	CHK	APP
B	BLB	TAH	EVB
A	BLB	TAH	EVB

DATE	REVISIONS AND RECORD OF USE
7/30/2019	60% SUBMITTAL
3/5/2019	30% SUBMITTAL

BLACK & VEATCH

JOINT VENTURE

FILANC

BLACK & VEATCH

CITY OF MORRO BAY
MORRO BAY WATER
RECLAMATION FACILITY (WRF)

TREATMENT AREA - MBR SYSTEM
P&ID
TANK DRAIN PUMP

DESIGNED: BLB, KEZ
DETAILED: PVR
CHECKED: TAH
APPROVED:
DATE:

0 1/2 1
IF THIS BAR DOES NOT MEASURE 1" THEN DRAWING IS NOT TO FULL SCALE

PROJECT NO.
400530

32-I-007
SHEET
OF

PLOTTED: 30-07-2019 14:41:22
D400530

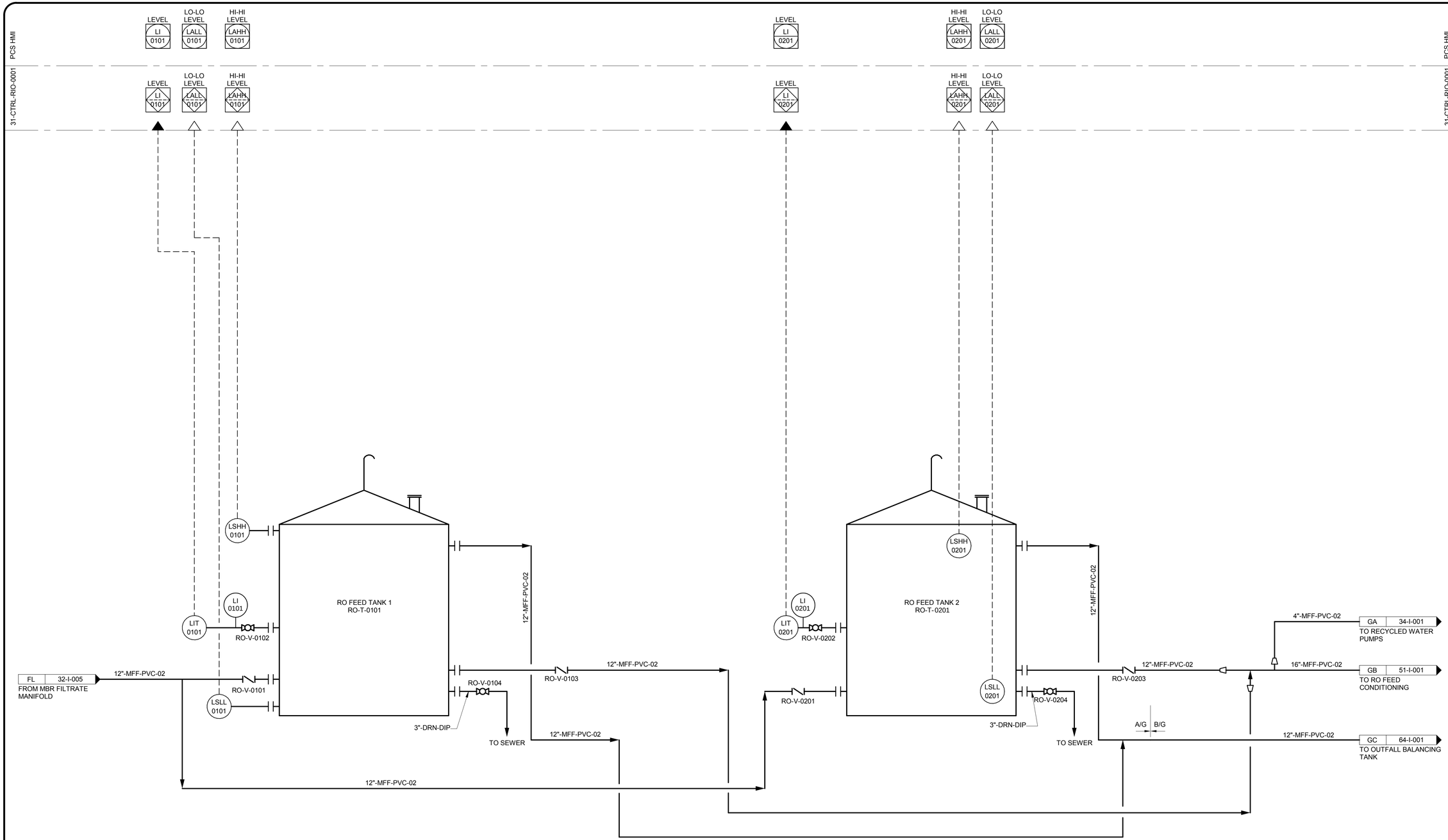

NOTES:

1. SEE LEGEND AND ABBREVIATIONS ON DRAWINGS 00-I-001, 00-1-002 AND 00-1-003.
2. AREA CODE IS 33 UNLESS OTHERWISE NOTED. SYSTEM CODE IS RO UNLESS OTHERWISE NOTED.
3. LOCAL CONTROL DEVICES SUCH AS INDICATING LIGHTS AND SWITCHES, LOCATED ON MCCs OR AT DRIVEN EQUIPMENT, MAY NOT BE SHOWN ON THIS P&ID.

60% SUBMITTAL- NOT FOR CONSTRUCTION

NO.	DATE	REVISIONS AND RECORD OF USE	BY	CHK	APP
B	7/30/2019	60% SUBMITTAL	BLB	TAH	EVB
A	3/5/2019	30% SUBMITTAL	BLB	TAH	EVB

BLACK & VEATCH

JOINT VENTURE

FILANC

BLACK & VEATCH

CITY OF MORRO BAY
MORRO BAY WATER RECLAMATION FACILITY (WRF)

TREATMENT AREA - RO FEED TANKS
P&ID
RO FEED TANKS

DESIGNED: BLB, KEZ
DETAILED: PVR
CHECKED: TAH
APPROVED:
DATE:

0 1/2 1

IF THIS BAR DOES NOT MEASURE 1" THEN DRAWING IS NOT TO FULL SCALE

PROJECT NO.
400530

33-I-001
SHEET
OF

PLOTTED: 30-07-2019 14:41:23
D400530

PCS HMI

LO PRESSURE	IN REMOTE	RUNNING	FAIL	RUN CMD	SPEED SETPT	SPEED FEEDBACK	HI PRESSURE
PAL 0201	YI 0201	YIR 0201	UA 0201	UCR 0201	SC 0201	SI 0201	PAH 0201
PAL 0101	YI 0101	YIR 0101	UA 0101	UCR 0101	SC 0101	SI 0101	PAH 0101
PAL 0301	YI 0301	YIR 0301	UA 0301	UCR 0301	SC 0301	SI 0301	PAH 0301

80-CTRL-PLC-0001 (PCS HMI)

LO PRESSURE	IN REMOTE	RUNNING	FAIL	RUN CMD	SPEED SETPT	SPEED FEEDBACK	HI PRESSURE
PAL 0201	YI 0201	YIR 0201	UA 0201	UCR 0201	SC 0201	SI 0201	PAH 0201
PAL 0101	YI 0101	YIR 0101	UA 0101	UCR 0101	SC 0101	SI 0101	PAH 0101
PAL 0301	YI 0301	YIR 0301	UA 0301	UCR 0301	SC 0301	SI 0301	PAH 0301

80-CTRL-PLC-0001 (PCS HMI) | 31-CTRL-RIO-0001 (PCS HMI)

FLOW FI 0001

FLOW FI 0001 (31-CTRL-RIO-0001)

80-ELEC-MCC-0001
34-PRW-VFD-0201
ON-SITE RECYCLED PUMP 0201

80-ELEC-MCC-0001
34-PRW-VFD-0101
ON-SITE RECYCLED PUMP 0101

80-ELEC-MCC-0001
34-PRW-VFD-0301
ON-SITE RECYCLED PUMP 0301

PG 0001

500 GALLON AIR BLADDER STORAGE TANK
PRW-T-0001

PRW-V-0001

24V — FIT 0001

FE 0001

M 3"

4"-PRW-DIP — A/G B/G — 4"-PRW-PVC-01 — DISTRIBUTION TO SITE USAGE

NACL-V-0003

NACL-V-0002

NACL-V-0001

1"-NACL-CPVC-01

1/2"-NACL-TEFL-01 — 90-I-002 UH — FROM SODIUM HYPOCHLORITE

YARD PIPING | PLANT PIPING

GA 33-I-001 — FROM RO FEED TANKS

4"-PRW-PVC-02

4"-PRW-PVC-02

PSH 0102 | PG 0102

PRW-V-0104

PRW-V-0108

PRW-V-0107

OO HS 0101 HS 0101 E-STOP

PSL 0101 | PG 0101

TSH 0101

PRW-V-0102

3"-PRW-PVC-02 — 3"-PRW-DIP

PRW-V-0101

RECYCLED WATER PUMP
PRW-P-0101

3"-PRW-DIP

PRW-V-0103

Y_D

PRW-V-0105 PRW-V-0106

4"-PRW-DIP

PSH 0202 | PG 0202

PRW-V-0204

PRW-V-0208

PRW-V-0207

OO HS 0201 HS 0201 E-STOP

PSL 0201 | PG 0201

TSH 0201

PRW-V-0202

3"-PRW-PVC-02 — 3"-PRW-DIP

PRW-V-0201

RECYCLED WATER PUMP
PRW-P-0201

3"-PRW-DIP

PRW-V-0203

Y_D

PRW-V-0205 PRW-V-0206

4"-PRW-DIP

PSH 0302 | PG 0302

PRW-V-0304

PRW-V-0308

PRW-V-0307

OO HS 0301 HS 0301 E-STOP

PSL 0301 | PG 0301

TSH 0301

PRW-V-0302

3"-PRW-PVC-02 — 3"-PRW-DIP

PRW-V-0301

RECYCLED WATER PUMP
PRW-P-0301

3"-PRW-DIP

PRW-V-0303

Y_D

PRW-V-0305 PRW-V-0306

4"-PRW-DIP

NOTES:

1. SEE LEGEND AND ABBREVIATIONS ON DRAWING 00-I-001, 00-I-002 AND 00-I-003.
2. AREA CODE IS 34 UNLESS OTHERWISE NOTED. SYSTEM CODE IS PRW UNLESS OTHERWISE NOTED.
3. LOCAL CONTROL DEVICES SUCH AS INDICATING LIGHTS AND SWITCHES, LOCATED IN MCC's OR AT DRIVEN EQUIPMENT MAY NOT INDICATED ON THIS P&ID.

60% SUBMITTAL - NOT FOR CONSTRUCTION

NO.	REVISIONS AND RECORD OF USE	DATE	BY	CHK	APP
B	60% SUBMITTAL	7/30/2019	BLB	TAH	EVB
A	30% SUBMITTAL	3/5/2019	BLB	TAH	EVB

BLACK & VEATCH JOINT VENTURE — FILANC — BLACK & VEATCH

CITY OF MORRO BAY
MORRO BAY WATER
RECLAMATION FACILITY (WRF)

TREATMENT AREA - RECYCLED WATER PUMP STATION
P&ID
RECYCLED WATER PUMPS

DESIGNED: BLB, KEZ
DETAILED: PVR
CHECKED: TAH
APPROVED:
DATE:

0 1/2 1
IF THIS BAR DOES NOT MEASURE 1" THEN DRAWING IS NOT TO FULL SCALE

PROJECT NO. 400530

34-I-001
SHEET
OF

PLOTTED: 30-07-2019 14:41:23
D400530

PCS HMI

51-CTRL-RIO-0001

COND FAULT FA 0001 | COND AI 0001
TURB FAULT FA 0002 | TURB COND AI 0002
ORP FAULT FA 0003 | ORP AI 0003
CL2 FAULT FA 0004 | FREE CL2 AI 0004
CL2 FAULT FA 0005 | NH3 AI 0005
pH FAULT FA 0006 | pH AI 0006 | TEMP AI 0006
FLOW FI 0001
MOTOR RUNNING YIR 0001 | FAIL UA 0001 | RUN CMD UCR 0001
IN REMOTE YI 0012 | OPENED ZIO 0012 | CLOSED ZIC 0012 | OPEN CMD ZCO 0012 | CLOSE CMD ZCC 0012

120Vac

AIT 0001 COND → AE 0001 → RO-V-0003 → FI 0001
AIT 0002 TURB → AE 0002 → RO-V-0004 → FI 0002
AIT 0003 ORP → AE 0003 → RO-V-0005 → FI 0003
AIT 0004 FREE CL2 (NOTE 8) → AE 0004 → RO-V-0006 → FI 0004
AIT 0005 MONO-CHLORIMINE / AMMONIA → AE 0005 → RO-V-0007 → FI 0005
AIT 0006 pH → AE 0006 → RO-V-0008 → FI 0006

RO-V-0002
RO-V-0009 → T_D

LCP WITH LOCAL STARTER

HS 0012 LOR | HS 0012 OSC | ZLC 0012 | ZLO 0012 | ZSC 0012 | ZSO 0012
480V
VALVE ACTUATOR

120VAC
SAMPLE PUMP
RO-P-0001

RO-V-0001
RO-V-0011
RO-V-0010

M
8"-ROF- PVC -02
RO-V-0012
IA 64-I-001 RO PUMP TO OCEAN OUTFALL TANK
6"-ROF- PVC -02
IB 51-I-002 RO FEED PUMP 1
6"-ROF- PVC -02
IC 51-I-002 RO FEED PUMP 2
6"-ROF- PVC -02
ID 51-I-002 RO FEED PUMP 3

24V FIT 0001
FE 0001
M 10"
10"-ROF- PVC -02

16"-MFF- PVC -02
12"-ROF- PVC -02
GB 33-I-001 MFF
STATIC MIXER RO-MXS-0001 NOTE 6
NOTE 7
12"-ROF- PVC -02
STATIC MIXER RO-MXS-0002 NOTE 6
12"-ROF- PVC -02

HS04-V-0003
HS04-V-0002
HS04-V-0001
1"-SA-CPVC-02
PLANT PIPING
YARD PIPING
1/2"-SA-TEFL-01
UP 90-I-007 SULFURIC ACID

NOCL-V-0003
NOCL-V-0002
NOCL-V-0001
1"-NACL-CPVC-02
YARD PIPING | PLANT PIPING
1/2"-NACL-TEFL-01
UC 90-I-001 SODIUM HYPOCHLORITE

ANTI-V-0003
ANTI-V-0002
ANTI-V-0001
PLANT PIPING | YARD PIPING
1"-ANTI-CPVC-02
1/2"-ANTI-PE-06
90-I-005 UM ANTISCALANT

NOTES:

1. SEE LEGEND AND ABBREVIATIONS ON DRAWINGS 00-I-001, 00-1-002 AND 00-1-003
2. AREA CODE IS 51 UNLESS OTHERWISE NOTED. SYSTEM CODE IS RO UNLESS OTHERWISE NOTED.
3. LOCAL CONTROL DEVICES SUCH AS INDICATING LIGHTS AND SWITCHES, LOCATED ON MCCs OR AT DRIVEN EQUIPMENT, MAY NOT BE SHOWN ON THIS P&ID.
4. ALL INSTRUMENT TAGS SHALL HAVE "51" AS PREFIX UNLESS OTHERWISE NOTED AND EXCEPT DCU NUMBER. FOR EXAMPLE, FIT-XXXX SHALL READ 51-FIT-XXXX.
5. ALL INSTRUMENTS SHOWN AS PANEL MOUNTED ON THIS DRAWINGS ARE LOCATED ON THE RO FEEDWATER INSTRUMENT PANEL MOUNTED ON THIS DRAWING ARE LOCATED ON THE RO FEEDWATER INSTRUMENT PANEL, SHOWN ON DWG. XX-I-XXXX.
6. STATIC MIXER SHOWN, HOWEVER, THIS DOSING POINT MAY BE RELOCATED FAR ENOUGH UPSTREAM TO ENSURE PROPER MIXING IF HYDRAULIC CONDITIONS REQUIRE. TO BE FINALIZED DURING DETAILED DESIGN.
7. CONNECTION FOR FUTURE LIQUID AMMONIA SULFATE CHEMICAL ADDITION.
8. INSTRUMENT TO BE TITRATING TYPE NOT PROBE TYPE.

60% SUBMITTAL- NOT FOR CONSTRUCTION

NO.	BY	CHK	APP
B	BLB	TAH	EVB
A	BLB	TAH	EVB

REVISIONS AND RECORD OF USE

DATE
7/30/2019 60% SUBMITTAL
3/5/2019 30% SUBMITTAL

BLACK & VEATCH
JOINT VENTURE
FILANC
BLACK & VEATCH

CITY OF MORRO BAY
MORRO BAY WATER RECLAMATION FACILITY (WRF)

RO/UV BUILDING - RO SYSTEM P&ID
RO FEED CONDITIONING SYSTEM

DESIGNED: BLB, KEZ
DETAILED: PVR
CHECKED: TAH
APPROVED:
DATE:

0 1/2 1
IF THIS BAR DOES NOT MEASURE 1" THEN DRAWING IS NOT TO FULL SCALE

PROJECT NO. 400530

51-I-001
SHEET OF XXX

PLOTTED: 30-07-2019 14:58:32
D400530

TYPICAL I/O & CONTROLS FOR ON-OFF VALVE

PCS HMI

51-CTRL-RIO-0001

IN REMOTE	OPENED	CLOSED	OPEN CMD	CLOSE CMD
YI 0307	ZIO 0307	ZIC 0307	ZCO 0307	ZCC 0307

LO PRESSURE	HI PRESSURE	IN REMOTE	RUNNING	FAIL	RUN CMD	RESET CMD	SPEED FEEDBACK	SPEED SETPT	DIFF. PRESSURE	DIFF. PRESSURE	DIFF. PRESSURE
PAL 0101	PAH 0101	YI 0101	YIR 0101	UA 0101	UCR 0101	UC 0101	SI 0101	SC 0101			
PAL 0201	PAH 0201	YI 0201	YIR 0201	UA 0201	UCR 0201	UC 0201	SI 0201	SC 0201			
PAL 0301	PAH 0301	YI 0301	YIR 0301	UA 0301	UCR 0301	UC 0301	SI 0301	SC 0301	DPI 0303	DPI 0203	DPI 0103

* 51-RO-VFD-0101

* 51-RO-VFD-0201

* 51-RO-VFD-0301

PROVIDED BY RO SYSTEM SUPPLIER

OO HS HS E-STOP

IB 51-I-001 FROM RO FEED SUPPLY — 6"-ROF- PVC -02 — RO-V-0101 — 6"-ROF-SS-05 — PG 0101 — PSL 0101 — RO-V-0102 — RO-P-0101

PG 0102 — PSH 0102 — RO-V-0105 — 6"-ROF-SS-05 — RO-V-0106

RO-V-0103 — SDI CONNECTION — RO-V-0104 — Y_D

RO-V-0109 — RO-V-0111 — RO-V-0108 — RO-V-0110 — 6"-ROF-SS-05 — IE 51-I-003 TO RO SYSTEM 1 — RO-V-0116

PDIT 0103 — RO CARTRIDGE FILTER NO. 1 RO-FLC-0101 — RO-V-0112 — RO-V-0113 — RO-V-0114 — RO-V-0115

SEE TYPICAL I/O & CONTROLS — M — SS PVC — RO-V-0107 — 4"-FF- PVC -02 — 51-I-011 JH FROM RO FLUSH PUMPS

OO HS HS E-STOP

IC 51-I-001 FROM RO FEED SUPPLY — 6"-ROF- PVC -02 — RO-V-0201 — 6"-ROF-SS-05 — PG 0201 — PSL 0201 — RO-V-0202 — RO-P-0201

PG 0202 — PSH 0202 — RO-V-0205 — 6"-ROF-SS-05 — RO-V-0206

RO-V-0203 — SDI CONNECTION — RO-V-0204 — Y_D

RO-V-0209 — RO-V-0211 — RO-V-0208 — RO-V-0210 — 6"-ROF-SS-05 — IF 51-I-004 TO RO SYSTEM 2 — RO-V-0216

PDIT 0203 — RO CARTRIDGE FILTER NO. 2 RO-FLC-0201 — RO-V-0212 — RO-V-0213 — RO-V-0214 — RO-V-0215

SEE TYPICAL I/O & CONTROLS — M — SS PVC — RO-V-0207 — 4"-FF- PVC -02 — 51-I-011 JI FROM RO FLUSH PUMPS

OO HS HS E-STOP

ID 51-I-001 FROM RO FEED SUPPLY — 6"-ROF- PVC -02 — RO-V-0301 — 6"-ROF-SS-05 — PG 0301 — PSL 0301 — RO-V-0302 — RO-P-0301

PG 0302 — PSH 0302 — RO-V-0305 — 6"-ROF-SS-05 — RO-V-0306

RO-V-0303 — SDI CONNECTION — RO-V-0304 — Y_D

RO-V-0309 — RO-V-0311 — RO-V-0308 — RO-V-0310 — 6"-ROF-SS-05 — IG 51-I-005 TO RO SYSTEM 3 — RO-V-0086

PDIT 0303 — RO CARTRIDGE FILTER NO. 3 RO-FLC-0003 — RO-V-0312 — RO-V-0313 — RO-V-0314 — RO-V-0315

M — SS PVC — RO-V-0307 — 4"-FF- PVC -02 — 51-I-011 JJ FROM RO FLUSH PUMPS

NOTES:

1. SEE LEGEND AND ABBREVIATIONS ON DRAWINGS 00-I-001, 00-I-002 AND 00-I-003.
2. AREA CODE IS 51 UNLESS OTHERWISE NOTED. SYSTEM CODE IS RO UNLESS OTHERWISE NOTED.
3. LOCAL CONTROL DEVICES SUCH AS INDICATING LIGHTS AND SWITCHES, LOCATED ON MCC's OR AT DRIVEN EQUIPMENT, MAY NOT BE SHOWN ON THIS P&ID.
4. ALL INSTRUMENT TAGS SHALL HAVE SYSTEM CODE OF RO UNLESS OTHERWISE NOTED.
5. INSTRUMENTATION AND CONTROLS ARE TYPICAL FOR VARIABLE SPEED DRIVES FOR RO FEED PUMPS. NOT ALL PANEL COMPONENTS SHOWN. SEE SPECIFICATION FOR REQUIREMENTS.
6. PIPING SIZES ARE PRELIMINARY AND TO BE FINALIZED BY ROSS.

* INDICATES ITEM FURNISHED BY ROSS (REVERS OSMOSIS SYSTEM SUPPLIER).

60% SUBMITTAL - NOT FOR CONSTRUCTION

NO.	BY	CHK	APP	DATE	REVISIONS AND RECORD OF USE
B	BLB	TAH	EVB	7/30/2019	60% SUBMITTAL
A	BLB	TAH	EVB	3/5/2019	30% SUBMITTAL

BLACK & VEATCH

JOINT VENTURE

FILANC

BLACK & VEATCH

CITY OF MORRO BAY
MORRO BAY WATER RECLAMATION FACILITY (WRF)

RO/UV BUILDING - RO SYSTEM P&ID
RO CARTRIDGE FILTERS

DESIGNED: BLB, ADV
DETAILED: PVR
CHECKED: TAH
APPROVED:
DATE:

0 1/2 1
IF THIS BAR DOES NOT MEASURE 1" THEN DRAWING IS NOT TO FULL SCALE

PROJECT NO. 400530

51-I-002
SHEET OF XXX

PLOTTED: 30-07-2019 14:58:33
D400530

PCS HMI

*51-RO-LCP-0001

IN REMOTE YI 1001 | OPENED ZIO 1001 | CLOSED ZIC 1001 | OPEN CMD ZCO 1001 | CLOSE CMD ZCC 1001

PRESSURE PI 1001 | PRESSURE PI 1003

PRESSURE PI 1004 | PRESSURE PI 1002 | PRESSURE PI 1005 | COND AI 1001 | FAIL YA 1001

FLOW FI 1001 | COND AI 1002 | FAIL UA 1002

IN REMOTE YI 1001 | RUNNING YIR 1001 | FAIL YA 1001 | RUN CMD UCR 1001 | RESET CMD UC 1001 | SPEED FEEDBACK SI 1001 | SPEED SETPT SC 1001

NOTE 6

HS 1001 LOR | HS 1001 OSC | ZLC 1001 | ZLO 1001 | ZSC 1001 | ZSO 1001

480V

VALVE ACTUATOR

VESSEL PERMEATE SAMPLE , TYP (NOTE 5)

FEED SAMPLE

RO-V-1005

RO-V-1008

STAGE 1 REJECT SAMPLE BIB (NOTE 5)

5-WAY VALVE

PG 1001

RO-V-1023

VESSEL PERMEATE SAMPLE BIB, TYP (NOTE 5)

STAGE 2 REJECT SAMPLE BIB (NOTE 5)

RO TRAIN INSTRUMENT AND SAMPLE PANEL

RO-V-1014

RO-V-1024

INTEGRAL SAMPLE DRAIN TROUGH TO FLOOR DRAIN

51-RO-LCP-1001
VFD-1001

PIT 1001

RO-V-1004

AIT 1001 COND 24V

COND AE 1001

PIT 1002

RUPTURE DISC

RO-RD-1001

REVERSE OSMOSIS MEMBRANE STAGE 1 RO

RO-V-1010

RO-V-1011

RO-V-1012

PROVIDED BY RO SYSTEM SUPPLIER

4"-ROP-CPVC-02

II 51-I-006
TO RO TRAIN 1
PERMEATE SYSTEM

IE 51-I-002
RO FEED PUMP 1

6"-ROF-SS-05

M

RO-V-1001

6"-ROF-SS-05

RO-V-1003

RO-V-1009

RO-V-1012

RO-V-1013

RO-V-1002

SS
CPVC

PIT 1004

REVERSE OSMOSIS MEMBRANE STAGE 2 RO

AIT 1002 COND 24V

COND AE 1002

FIT 1001 24V

FE 1001

M

2 1/2"

RO-V-1020

RO-V-1030

4"-ROF-SS-05

2 1/2"-ROP-CPVC-02

RO-V-1022

RO-V-1029

6"-ROC-SS-05

PIT 1003

RO-V-1016

PIT 1005

RO-V-1026

RO-V-1027

2 1/2"-ROC-SS-12

NOTE 10

RO-V-1028

2 1/2"-ROC-SS-12

IJ 51-I-006
TO RO TRAIN 1
CONCENTRATE SYSTEM

6"-CIPS-CPVC-02

RO-V-1017

RO-V-1021

RO-V-1025

RO-V-1015

SS
CPVC

SS
CPVC

SS
CPVC

4"-ROC-SS-05

6"-CIPR-CPVC-02

4"-ROC-SS-05

RO-V-1019

RO-V-1018

PG 1004

JE 51-I-010
FROM CIP PUMPS

6"-CIPS-CPVC-02

CIP SOLUTION SUPPLY

4"-CIPS-CPVC-02

IK 51-I-004
RO CLEANING RETURN
FROM TRAIN 3

6"-CIPR-CPVC-02

IN 51-I-005
RO CLEANING RETURN
FROM TRAIN 2

6"-CIPR-CPVC-02

4"-ROC-SS-05

BOOSTER PUMP
RO-P-1001

51-I-010 IH
RO CLEANING RUTURN

6"-CIPR-CPVC-02

CIP SOLUTION RETURN

4"-CIPR-CPVC-02

NOTES:

1. SEE LEGEND AND ABBREVIATIONS ON DRAWINGS 00-I-001, 00-I-00 AND 00-I-003.
2. AREA CODE IS 51 UNLESS OTHERWISE NOTED. SYSTEM CODE IS RO UNLESS OTHERWISE NOTED.
3. LOCAL CONTROL DEVICES SUCH AS INDICATING LIGHTS AND SWITCHES, LOCATED ON MCCs OR AT DRIVEN EQUIPMENT, MAY NOT BE SHOWN ON THIS P&ID.
4. TAG NUMBER FOR RO TRAINS 2,3, AND 4 SHALL FOLLOW THE SAME TAGGING SCHEME FOR RO TRAIN 1. FOR EXAMPLE CIP INTERCONNECT VALVE VBF-2314 SHALL BE TAGGED VBF-2324 FOR TRAIN 2, VBF-2334 FOR TRAIN 3, AND VBF-2344 FOR TRAIN 4.
5. ONE SAMPLE VALVE PER VESSEL.
6. ALL INSTRUMENTS (INCLUDING VALVE INDICATORS AND CONTROLS) SHOWN AS PANEL MOUNTED ON THIS DRAWING ARE LOCATED ON THE RO TRAIN INSTRUMENT CONTROL PANEL.
7. NOT ALL CIP VALVES AND PIPING ARE INDICATED ON THE DRAWING.
8. RO SKID TO BE EQUIPPED WITH VALVES AT LOW POINTS TO PROVIDE ADAQUATE DRAINING.
9. PIPING SIZES ARE PRELIMINARY AND TO BE FINALIZED BY ROSS.
10. HIGH PRESSURE SECOND STAGE CONCENTRATE PIPING TO BE DUPLEX STAINLESS STEEL, REFER TO SPECIFICATIONS.

60% SUBMITTAL - NOT FOR CONSTRUCTION

NO.	BY	CHK	APP	DATE	REVISIONS AND RECORD OF USE
B	BLB	TAH	EVB	7/30/2019	60% SUBMITTAL
A	BLB	TAH	EVB	3/5/2019	30% SUBMITTAL

BLACK & VEATCH

JOINT VENTURE

FILANC

BLACK & VEATCH

CITY OF MORRO BAY
MORRO BAY WATER
RECLAMATION FACILITY (WRF)

RO/UV BUILDING - RO SYSTEM
P&ID
RO UNIT 1

DESIGNED: BLB, ADV
DETAILED: PVR
CHECKED: TAH
APPROVED:
DATE:

0 1/2 1
IF THIS BAR DOES NOT MEASURE 1" THEN DRAWING IS NOT TO FULL SCALE

PROJECT NO.
400530

51-I-003
SHEET
OF XXX

PLOTTED: 30-07-2019 14:58:33
D400530

PCS HMI

*51-RO-LCP-0001

IN REMOTE YI 2001 | OPENED ZIO 2001 | CLOSED ZIC 2001 | OPEN CMD ZCO 2001 | CLOSE CMD ZCC 2001

PRESSURE PI 2001 | PRESSURE PI 2003

PRESSURE PI 2004 | PRESSURE PI 2002 | PRESSURE PI 2005 | COND AI 2001 | FAIL YA 2001

FLOW FI 2001 | COND AI 2002 | FAIL YA 2002

IN REMOTE YI 2001 | RUNNING YIR 2001 | FAIL YA 2001 | RUN CMD UCR 2001 | RESET CMD UC 2001 | SPEED FEEDBACK SI 2001 | SPEED SETPT SC 2001

NOTE 6

VALVE ACTUATOR
HS 2001 LOR | HS 2001 OSC | ZLC 2001 | ZLO 2001 | ZSC 2001 | ZSO 2001
480V

VESSEL PERMEATE SAMPLE, TYP (NOTE 5)
FEED SAMPLE
RO-V-2005
RO-V-2008
STAGE 1 REJECT SAMPLE BIB (NOTE 5)
5-WAY VALVE
PG 2001
RO-V-2023
VESSEL PERMEATE SAMPLE BIB, TYP (NOTE 5)
STAGE 2 REJECT SAMPLE BIB (NOTE 5)
RO TRAIN INSTRUMENT AND SAMPLE PANEL
RO-V-2014
RO-V-2024

INTEGRAL SAMPLE DRAIN TROUGH TO FLOOR DRAIN

51-RO-LCP-2001
VFD-2001

PIT 2001
RO-V-2004
AE 2001 COND 24V
COND
PIT 2002
RO-V-2010
RO-V-2011
RO-V-2012
RUPTURE DISC
RO-RD-2001
4"-ROP-CPVC-02
PROVIDED BY RO SYSTEM SUPPLIER
IL 51-I-007
TO RO TRAIN 2 PERMEATE SYSTEM

IF 51-I-002
RO FEED PUMP 2
6"-ROF-SS-05
M
RO-V-2001
6"-ROF-SS-05
RO-V-2003
REVERSE OSMOSIS MEMBRANE STAGE 1 RO
RO-V-2009
RO-V-2012
RO-V-2013
AIT 2002 COND 24V
FIT 2001 24V
FE 2001
M
2 1/2"
AE 2002 COND
RO-V-2030

RO-V-2002
SS CPVC
6"-CIPS-CPVC-02
6"-ROC-SS-05
PIT 2004
RO-V-2020
4"-ROF-SS-05
REVERSE OSMOSIS MEMBRANE STAGE 2 RO
2 1/2"-ROP-CPVC-02
RO-V-2022
RO-V-2029

PIT 2003
PIT 2005
RO-V-2026
RO-V-2027
2 1/2"-ROC-SS-12
NOTE 10
RO-V-2028
2 1/2"-ROC-SS-12
IM 51-I-007
TO RO TRAIN 2 CONCENTRATE SYSTEM

RO-V-2017
RO-V-2021
RO-V-2025
RO-V-2015
SS CPVC
SS CPVC
SS CPVC
6"-CIPR-CPVC-02
4"-ROC-SS-05
4"-ROC-SS-05
RO-V-2019

RO-V-2018
PG 2004
4"-ROC-SS-05
BOOSTER PUMP RO-P-2001

JF 51-I-010
FROM CIP PUMPS
6"-CIPS-CPVC-02
CIP SOLUTION SUPPLY
4"-CIPS-CPVC-02

51-I-003 IK
RO CLEANING SOLUTION RUTURN
6"-CIPR-CPVC-02
CIP SOLUTION RETURN
4"-CIPR-CPVC-02

NOTES:

1. SEE LEGEND AND ABBREVIATIONS ON DRAWINGS 00-I-001, 00-I-00 AND 00-I-003.
2. AREA CODE IS 51 UNLESS OTHERWISE NOTED. SYSTEM CODE IS RO UNLESS OTHERWISE NOTED.
3. LOCAL CONTROL DEVICES SUCH AS INDICATING LIGHTS AND SWITCHES, LOCATED ON MCCs OR AT DRIVEN EQUIPMENT, MAY NOT BE SHOWN ON THIS P&ID.
4. TAG NUMBER FOR RO TRAINS 2,3, AND 4 SHALL FOLLOW THE SAME TAGGING SCHEME FOR RO TRAIN 1. FOR EXAMPLE CIP INTERCONNECT VALVE VBF-2314 SHALL BE TAGGED VBF-2324 FOR TRAIN 2, VBF-2334 FOR TRAIN 3, AND VBF-2344 FOR TRAIN 4.
5. ONE SAMPLE VALVE PER VESSEL.
6. ALL INSTRUMENTS (INCLUDING VALVE INDICATORS AND CONTROLS) SHOWN AS PANEL MOUNTED ON THIS DRAWING ARE LOCATED ON THE RO TRAIN INSTRUMENT CONTROL PANEL.
7. NOT ALL CIP VALVES AND PIPING ARE INDICATED ON THE DRAWING.
8. RO SKID TO BE EQUIPPED WITH VALVES AT LOW POINTS TO PROVIDE ADAQUATE DRAINING.
9. PIPING SIZES ARE PRELIMINARY AND TO BE FINALIZED BY ROSS.
10. HIGH PRESSURE SECOND STAGE CONCENTRATE PIPING TO BE DUPLEX STAINLESS STEEL, REFER TO SPECIFICATIONS.

* PROVIDED BY RO SYSTEM SUPPLIER

60% SUBMITTAL - NOT FOR CONSTRUCTION

NO.	BY	CHK	APP	DATE
B	BLB	TAH	EVB	7/30/2019
A	BLB	TAH	EVB	3/5/2019

REVISIONS AND RECORD OF USE

60% SUBMITTAL
30% SUBMITTAL

BLACK & VEATCH
JOINT VENTURE
FILANC
BLACK & VEATCH

CITY OF MORRO BAY
MORRO BAY WATER
RECLAMATION FACILITY (WRF)

RO/UV BUILDING - RO SYSTEM
P&ID
RO UNIT 2

DESIGNED: BLB, ADV
DETAILED: PVR
CHECKED: TAH
APPROVED:
DATE:

0 1/2 1
IF THIS BAR DOES NOT MEASURE 1" THEN DRAWING IS NOT TO FULL SCALE

PROJECT NO.
400530

51-I-004
SHEET
OF XXX

PLOTTED: 30-07-2019 14:58:34
D400530

PCS HMI

*51-RO-LCP-0001

IN REMOTE YI 3001 | OPENED ZIO 3001 | CLOSED ZIC 3001 | OPEN CMD ZCO 3001 | CLOSE CMD ZCC 3001

PRESSURE PI 3001 | PRESSURE PI 3003 | PRESSURE PI 3004 | PRESSURE PI 3002 | PRESSURE PI 3005 | COND AI 3001 | FAIL YA 3001

FLOW FI 3001 | COND AI 3002 | FAIL YA 3002

IN REMOTE YI 3001 | RUNNING YIR 3001 | FAIL YA 3001 | RUN CMD UCR 3001 | RESET CMD UC 3001 | SPEED FEEDBACK SI 3001 | SPEED SETPT SC 3001

NOTE 6

VESSEL PERMEATE SAMPLE, TYP (NOTE 5)

FEED SAMPLE

RO-V-3005

RO-V-3008

STAGE 1 REJECT SAMPLE BIB (NOTE 5)

5-WAY VALVE

PG 3001

RO-V-3023

VESSEL PERMEATE SAMPLE BIB, TYP (NOTE 5)

STAGE 2 REJECT SAMPLE BIB (NOTE 5)

RO TRAIN INSTRUMENT AND SAMPLE PANEL

RO-V-3014

RO-V-3024

HS 3001 LOR | HS 3001 OSC | ZLC 3001 | ZLO 3001 | ZSC 3001 | ZSO 3001

480V

VALVE ACTUATOR

INTEGRAL SAMPLE DRAIN TROUGH TO FLOOR DRAIN

51-RO-LCP-3001
VFD-3001

PIT 3001

RO-V-3004

AIT 3001 COND 24V

COND AE 3001

PIT 3002

RO-V-3010

RO-V-3011

RO-V-3012

RUPTURE DISC

RO-RD-3001

PROVIDED BY RO SYSTEM SUPPLIER

4"-ROP-CPVC-02

IO 51-I-008
TO RO TRAIN 3
PERMEATE SYSTEM

REVERSE OSMOSIS MEMBRANE STAGE 1 RO

RO-V-3003

RO-V-3009

RO-V-300

RO-V-3013

IG 51-I-002
RO FEED PUMP 3

6"-ROF-SS-05

M

RO-V-3001

6"-ROF-SS-05

RO-V-3002

SS CPVC

24V AIT 3002 COND

COND AE 3002

24V FIT 3001

FE 3001 M 2 1/2"

RO-V-3030

PIT 3004

RO-V-3020

4"-ROF-SS-05

REVERSE OSMOSIS MEMBRANE STAGE 2 RO

2 1/2"-ROP-CPVC-02

RO-V-3022

RO-V-3029

6"-ROC-SS-05

PIT 3003

RO-V-3016

PIT 3005

RO-V-3026

RO-V-3027

2 1/2"-ROC-SS-12

NOTE 10

RO-V-3028

2 1/2"-ROC-SS-12

IP 51-I-008
TO RO TRAIN 3
CONCENTRATE SYSTEM

6"-CIPS-CPVC-01

RO-V-3017

RO-V-3015

SS CPVC

RO-V-3021

RO-V-3025

SS CPVC

SS CPVC

4"-ROC-SS-05

6"-CIPR-CPVC-02

4"-ROC-SS-05

RO-V-3019

RO-V-3018

PG 3004

JG 51-I-010
FROM CIP PUMPS

6"-CIPS-CPVC-02

CIP SOLUTION SUPPLY

4"-CIPS-CPVC-02

4"-ROC-SS-05

BOOSTER PUMP
RO-P-3001

51-I-003 IN
RO CLEANING SOLUTION RUTURN

6"-CIPR-CPVC-02

CIP SOLUTION RETURN

4"-CIPR-CPVC-02

NOTES:

1. SEE LEGEND AND ABBREVIATIONS ON DRAWINGS 00-I-001, 00-I-00 AND 00-I-003.
2. AREA CODE IS 51 UNLESS OTHERWISE NOTED. SYSTEM CODE IS RO UNLESS OTHERWISE NOTED.
3. LOCAL CONTROL DEVICES SUCH AS INDICATING LIGHTS AND SWITCHES, LOCATED ON MCCs OR AT DRIVEN EQUIPMENT, MAY NOT BE SHOWN ON THIS P&ID.
4. TAG NUMBER FOR RO TRAINS 2,3, AND 4 SHALL FOLLOW THE SAME TAGGING SCHEME FOR RO TRAIN 1. FOR EXAMPLE CIP INTERCONNECT VALVE VBF-2314 SHALL BE TAGGED VBF-2324 FOR TRAIN 2, VBF-2334 FOR TRAIN 3, AND VBF-2344 FOR TRAIN 4.
5. ONE SAMPLE VALVE PER VESSEL.
6. ALL INSTRUMENTS (INCLUDING VALVE INDICATORS AND CONTROLS) SHOWN AS PANEL MOUNTED ON THIS DRAWING ARE LOCATED ON THE RO TRAIN INSTRUMENT CONTROL PANEL.
7. NOT ALL CIP VALVES AND PIPING ARE INDICATED ON THE DRAWING.
8. RO SKID TO BE EQUIPPED WITH VALVES AT LOW POINTS TO PROVIDE ADAQUATE DRAINING.
9. PIPING SIZES ARE PRELIMINARY AND TO BE FINALIZED BY ROSS.
10. HIGH PRESSURE SECOND STAGE CONCENTRATE PIPING TO BE DUPLEX STAINLESS STEEL, REFER TO SPECIFICATIONS.

* PROVIDED BY RO SYSTEM SUPPLIER

60% SUBMITTAL - NOT FOR CONSTRUCTION

NO.	BY	CHK	APP	DATE	REVISIONS AND RECORD OF USE
B	BLB	TAH	EVB	7/30/2019	60% SUBMITTAL
A	BLB	TAH	EVB	3/5/2019	30% SUBMITTAL

BLACK & VEATCH

JOINT VENTURE

FILANC

BLACK & VEATCH

CITY OF MORRO BAY
MORRO BAY WATER
RECLAMATION FACILITY (WRF)

RO/UV BUILDING - RO SYSTEM
P&ID
RO UNIT 3

DESIGNED: BLB, ADV
DETAILED: PVR
CHECKED: TAH
APPROVED:
DATE:

0 1/2 1
IF THIS BAR DOES NOT MEASURE 1" THEN DRAWING IS NOT TO FULL SCALE

PROJECT NO.
400530

51-I-005
SHEET
OF XXX

PLOTTED: 30-07-2019 14:58:34
D400530

PCS HMI

*51-RO-LCP-0001

PRESSURE PI 1007 | HI PRESSURE PAH 1006 | PRESSURE PI 1006 | FLOW FI 1003 | IN REMOTE YI 1048 | OPENED ZIO 1048 | CLOSED ZIC 1048 | OPEN CMD ZCO 1048 | CLOSE CMD ZCC 1048 | FLOW FI 1002 | IN REMOTE YI 1047 | POSITION FEEDBACK ZI 1047 | POSITION SETPT ZC 1047 | COND AI 1003 | FAIL YA 1003 | FAIL YA 1004 | COND AI 1004 | IN REMOTE YI 1040 | OPENED ZIO 1040 | CLOSED ZIC 1040 | OPEN CMD ZCO 1040 | CLOSE CMD ZCC 1040 | IN REMOTE YI 1042 | OPENED ZIO 1042 | CLOSED ZIC 1042 | OPEN CMD ZCO 1042 | CLOSE CMD ZCC 1042 | PRESSURE PI 1008

MOUNT ON RO TRAIN INSTRUMENT AND SAMPLE PANEL

PG 1006 | PSH 1006 | PIT 1006

RO-V-1031 | RO-V-1032 | RO-V-1033 | RO-V-1034

4"-ROP-CPVC-02

II 51-I-003
FROM RO PERMEATE UNIT 1 VESSELS

FIT 1002 — 24V

FE 1002

M — 4"

4"-ROP-CPVC-02

AIT 1003 — COND 24V

AE 1003 — COND

RO-V-1036 SAMPLE LINE

RO-V-1035

TO TRAIN SAMPLE/ANALYZER PANEL

CPVC-02 | PVC-02

2"-ROP- PVC -02

NOTE 5

V_D

RO-V-1039 | RO-V-1041

4"-ROP- PVC -02

VALVE ACTUATOR: HS 1040 LOR HS 1040 OSC | ZLC 1040 | ZLO 1040 | ZSC 1040 | ZSO 1040

VALVE ACTUATOR: HS 1042 LOR HS 1042 OSC | ZLC 1042 | ZLO 1042 | ZSC 1042 | ZSO 1042

M — RO-V-1042

4"-ROP- PVC -02 — IQ 52-I-001 TO UV SYSTEM

REMOVABLE SPOOLS (NOTE 7)

M — RO-V-1040

4"-ROP- PVC -02

8"-ROP- PVC -02 — IR 64-I-001 TO OUTFALL BALANCING TANK

4"-ROP- PVC -02 — IV 51-I-007 FROM TRAIN 2

4"-ROP- PVC -02 — IZ 51-I-008 FROM TRAIN 3

VALVE ACTUATOR: HS 1047 LOR HS 1047 OSC | ZT 1047 | ZI 1047

4"-PCR-CPVC-02

RO-V-1037 | RO-V-1038

4"-PCR-CPVC-02 — IS 51-I-009 RO TRAIN 1 CIP PERMEATE RETURN

4"-PCR-CPVC-02 — 51-I-007 IW RO TRAIN 2 CIP PERMEATE RETURN

4"-PCR-CPVC-02 — 51-I-008 JA RO TRAIN 3 CIP PERMEATE RETURN

VALVE ACTUATOR: HS 1048 LOR HS 1048 OSC | ZLC 1048 | ZLO 1048 | ZSC 1048 | ZSO 1048

RO-V-1045 | RO-V-1046

PIT 1007 | PG 1007 | FIT 1003 — 24V

RO-V-1043

2 1/2"-ROC-SS-12

IJ 51-I-003
CONCENTRATE FROM RO UNIT 1 VESSELS

RO-V-1044

FE 1003

M — 2 1/2"

2 1/2"-ROC-SS-12 NOTE 6

RO-V-1047

M — RO-V-1048

2 1/2"-ROC-SS-12 NOTE 6

PROVIDED BY RO SYSTEM SUPPLIER

AIT 1004 — COND 24V

AE 1004 — COND

RO-V-1050 SAMPLE LINE

RO-V-1049

TO TRAIN SAMPLE/ANALYZER PANEL

SS | PVC

2 1/2"-ROC- PVC -02

PIT 1008

RO-V-1051 | RO-V-1052 | RO-V-1053

4"-ROC- PVC -02 — IT 65-I-001 TO OUTFALL SYSTEM

2 1/2"-ROC- PVC -02 — IX 51-I-007 FROM TRAIN 2

2 1/2" ROC- PVC -02

JB 51-I-008
FROM TRAIN 3

NOTES:

1. SEE LEGEND AND ABBREVIATIONS ON DRAWINGS 00-I-001, 00-I-002 AND 00-I-003.
2. AREA CODE IS 51 UNLESS OTHERWISE NOTED. SYSTEM CODE IS RO UNLESS OTHERWISE NOTED.
3. LOCAL CONTROL DEVICES SUCH AS INDICATING LIGHTS AND SWITCHES, LOCATED ON MCCs OR AT DRIVEN EQUIPMENT, MAY NOT BE SHOWN ON THIS P&ID.
4. PIPING SIZES ARE PRELIMINARY AND TO BE FINALIZED BY ROSS.
5. CIP BLEED VALVE.
6. HIGH PRESSURE SECOND STAGE CONCENTRATE PIPING TO BE DUPLEX STAINLESS STEEL, REFER TO SPECIFICATIONS.
7. PROVIDE REMOVABLE SPOOLS, SWAPABLE FITTING, OR BLOCK AND BLEED VALVING TO PREVENT POTENTIAL CROSS-CONNECTION OF PERMATE AND CIP RETURN. FURNISH SUITABLE BLIND FLANGES TO REPLACE REMOVABLE SPOOL OR SWAPABLE FITTING AS REQUIRED.

* PROVIDED BY RO SYSTEM SUPPLIER

60% SUBMITTAL - NOT FOR CONSTRUCTION

NO.	BY	CHK	APP	DATE	REVISIONS AND RECORD OF USE
B	BLB	TAH	EVB	7/30/2019	60% SUBMITTAL
A	BLB	TAH	EVB	3/5/2019	30% SUBMITTAL

BLACK & VEATCH JOINT VENTURE BLACK & VEATCH

FILANC

CITY OF MORRO BAY
MORRO BAY WATER RECLAMATION FACILITY (WRF)

RO/UV BUILDING - RO SYSTEM P&ID

RO PERMEATE/CONCENTRATE, UNIT 1

DESIGNED: BLB, ADV
DETAILED: PVR
CHECKED: TAH
APPROVED:
DATE:

0 1/2 1
IF THIS BAR DOES NOT MEASURE 1" THEN DRAWING IS NOT TO FULL SCALE

PROJECT NO. 400530

51-I-006
SHEET
OF XXX

PLOTTED: 30-07-2019 14:58:34
D400530

PCS HMI

*51-RO-LCP-0001

PRESSURE PI 2007 | HI PRESSURE PAH 2006 | PRESSURE PI 2006 | IN REMOTE YI 2048 | OPENED ZIO 2048 | CLOSED ZIC 2048 | OPEN CMD ZCO 2048 | CLOSE CMD ZCC 2048 | FLOW FI 2003 | FLOW FI 2002 | IN REMOTE YI 2047 | POSITION FEEDBACK ZI 2047 | POSITION SETPT ZC 2047 | COND AI 2003 | FAIL YA 2003 | FAIL YA 2004 | COND AI 2004 | IN REMOTE YI 2040 | OPENED ZIO 2040 | CLOSED ZIC 2040 | OPEN CMD ZCO 2040 | CLOSE CMD ZCC 2040 | IN REMOTE YI 2042 | OPENED ZIO 2042 | CLOSED ZIC 2042 | OPEN CMD ZCO 2042 | CLOSE CMD ZCC 2042 | PRESSURE PI 2008

MOUNT ON RO TRAIN INSTRUMENT AND SAMPLE PANEL

PG 2006 | PSH 2006 | PIT 2006 | RO-V-2033 | RO-V-2034

4"-ROP-CPVC-02 | RO-V-2031 | RO-V-2032

IL 51-I-004
FROM RO PERMEATE UNIT 2 VESSELS

4"-ROP-CPVC-02

FIT 2002 — 24V | FE 2002 | M | 4"

AIT 2003 — COND 24V | AE 2003 — COND

RO-V-2036 SAMPLE LINE | RO-V-2035 | TO TRAIN SAMPLE/ANALYZER PANEL

CPVC-02 | PVC-02 | RO-V-2039

2"-ROP- PVC -02 | NOTE 5 | D

RO-V-2041

VALVE ACTUATOR: HS 2040 | LOR | HS 2040 | OSC | ZLC 2040 | ZLO 2040 | ZSC 2040 | ZSO 2040

VALVE ACTUATOR: HS 2042 | LOR | HS 2042 | OSC | ZLC 2042 | ZLO 2042 | ZSC 2042 | ZSO 2042

M — RO-V-2042

4"-ROP- PVC -02 — IU 52-I-001 TO UV SYSTEM

M — RO-V-2040

4"-ROC-PVC-02

4"-ROP- PVC -02 — IV 51-I-006 TO OUTFALL PS

REMOVABLE SPOOLS (NOTE 7)

VALVE ACTUATOR: HS 2047 | LOR | HS 2047 | OSC | ZT 2047 | ZI 2047

RO-V-2037 | RO-V-2038

4"-PCR-CPVC-02 — 4"-PCR-CPVC-02 — IW 51-I-006 RO CIP PERMEATE RETURN

VALVE ACTUATOR: HS 2048 | LOR | HS 2048 | OSC | ZLC 2048 | ZLO 2048 | ZSC 2048 | ZSO 2048

AIT 2004 — COND 24V | AE 2004 — COND

RO-V-2045 | RO-V-2046

PIT 2007 | PG 2007 | FIT 2003 — 24V | FE 2003 | M | 2 1/2"

RO-V-2043 | 2 1/2"-ROC-SS-12 | RO-V-2044

IM 51-I-004
CONCENTRATE FROM RO UNIT 2 VESSELS

2 1/2"-ROC-SS-12 NOTE 6 | RO-V-2047

RO-V-2050 SAMPLE LINE | RO-V-2049

SS | PVC

TO TRAIN SAMPLE/ANALYZER PANEL

PIT 2008 | RO-V-2051

2 1/2"-ROC- PVC -02 — 2 1/2"-ROC- PVC -02 — IX 51-I-006 TO OUTFALL SYSTEM

RO-V-2052 | RO-V-2053

M — RO-V-2048 — 2 1/2"-ROC-SS-12 NOTE 6

PROVIDED BY RO SYSTEM SUPPLIER

NOTES:

1. SEE LEGEND AND ABBREVIATIONS ON DRAWINGS 00-I-001, 00-I-002 AND 00-I-003.
2. AREA CODE IS 51 UNLESS OTHERWISE NOTED. SYSTEM CODE IS RO UNLESS OTHERWISE NOTED.
3. LOCAL CONTROL DEVICES SUCH AS INDICATING LIGHTS AND SWITCHES, LOCATED ON MCCs OR AT DRIVEN EQUIPMENT, MAY NOT BE SHOWN ON THIS P&ID.
4. PIPING SIZES ARE PRELIMINARY AND TO BE FINALIZED BY ROSS.
5. CIP BLEED VALVE.
6. HIGH PRESSURE SECOND STAGE CONCENTRATE PIPING TO BE DUPLEX STAINLESS STEEL, REFER TO SPECIFICATIONS.
7. PROVIDE REMOVABLE SPOOLS, SWAPABLE FITTING, OR BLOCK AND BLEED VALVING TO PREVENT POTENTIAL CROSS-CONNECTION OF PERMATE AND CIP RETURN. FURNISH SUITABLE BLIND FLANGES TO REPLACE REMOVABLE SPOOL OR SWAPABLE FITTING AS REQUIRED.

* PROVIDED BY RO SYSTEM SUPPLIER

60% SUBMITTAL- NOT FOR CONSTRUCTION

NO.	BY	CHK	APP	DATE	REVISIONS AND RECORD OF USE
B	BLB	TAH	EVB	7/30/2019	60% SUBMITTAL
A	BLB	TAH	EVB	3/5/2019	30% SUBMITTAL

BLACK & VEATCH

JOINT VENTURE

FILANC

BLACK & VEATCH

CITY OF MORRO BAY
MORRO BAY WATER RECLAMATION FACILITY (WRF)

RO/UV BUILDING - RO SYSTEM P&ID

RO PERMEATE/CONCENTRATE, UNIT 2

DESIGNED: BLB, ADV
DETAILED: PVR
CHECKED: TAH
APPROVED:
DATE:

0 1/2 1
IF THIS BAR DOES NOT MEASURE 1" THEN DRAWING IS NOT TO FULL SCALE

PROJECT NO. 400530

51-I-007
SHEET OF XXX

PLOTTED: 30-07-2019 14:58:35
D400530

PCS HMI

*51-RO-LCP-0001

PRESSURE PI 3007 | HI PRESSURE PAH 3006 | PRESSURE PI 3006 | IN REMOTE YI 3048 | OPENED ZIO 3048 | CLOSED ZIC 3048 | OPEN CMD ZCO 3048 | CLOSE CMD ZCC 3048 | FLOW FI 3003 | FLOW FI 3002 | IN REMOTE YI 3047 | POSITION FEEDBACK ZI 3047 | POSITION SETPT ZC 3047 | COND AI 3003 | FAIL YA 3003 | FAIL YA 3004 | COND AI 3004 | IN REMOTE YI 3040 | OPENED ZIO 3040 | CLOSED ZIC 3040 | OPEN CMD ZCO 3040 | CLOSE CMD ZCC 3040 | IN REMOTE YI 3042 | OPENED ZIO 3042 | CLOSED ZIC 3042 | OPEN CMD ZCO 3042 | CLOSE CMD ZCC 3042 | PRESSURE PI 3008

MOUNT ON RO TRAIN INSTRUMENT AND SAMPLE PANEL

PG 3006 | PSH 3006 | PIT 3006 | RO-V-3033 | RO-V-3034 | RO-V-3031 | 4"-ROP-CPVC-02 | RO-V-3032

IO 51-I-005
FROM RO PERMEATE UNIT 3 VESSELS

4"-ROP-CPVC-02

FIT 3002 — 24V
FE 3002
M
4"

AIT 3003 — COND — 24V
AE 3003 — COND

RO-V-3036
SAMPLE LINE
RO-V-3035
TO TRAIN SAMPLE/ANALYZER PANEL

NOTE 5

CPVC-02 | PVC-02 | 2"-ROP- PVC -02

RO-V-3039 | RO-V-3041

HS 3040 LOR HS 3040 OSC ZLC 3040 ZLO 3040 ZSC 3040 ZSO 3040
VALVE ACTUATOR

HS 3042 LOR HS 3042 OSC ZLC 3042 ZLO 3042 ZSC 3042 ZSO 3042
VALVE ACTUATOR

4"-ROP- PVC -02

M
RO-V-3042

4"-ROP- PVC -02
IY 52-I-001
TO UV SYSTEM

M
RO-V-3040

4"-ROP-PVC-02

4"-ROP- PVC -02
IZ 51-I-006
TO OUTFALL PS

REMOVABLE SPOOLS (NOTE 7)

RO-V-3037 | RO-V-3038

4"-PCR-CPVC-02

4"-PCR- PVC -02
JA 51-I-006
RO CIP PERMEATE RETURN

HS 3047 LOR HS 3047 OSC ZT 3047 ZI 3047
VALVE ACTUATOR

HS 3048 LOR HS 3048 OSC ZLC 3048 ZLO 3048 ZSC 3048 ZSO 3048
VALVE ACTUATOR

RO-V-3045 | RO-V-3046

PIT 3007 | PG 3007 | FIT 3003 — 24V | FE 3003 | M | 2 1/2"

RO-V-3043
2 1/2"-ROC-SS-12
IP 51-I-005
CONCENTRATE FROM RO UNIT 3 VESSELS

RO-V-3044

2 1/2"-ROC-SS-12
NOTE 6

M
RO-V-3047

SS | PVC

AIT 3004 — COND — 24V
AE 3004 — COND

RO-V-3050
SAMPLE LINE
RO-V-3049
TO TRAIN SAMPLE/ANALYZER PANEL

PIT 3008
RO-V-3051

2 1/2"-ROC- PVC -02

RO-V-3052 | RO-V-3053

2 1/2"-ROC- PVC -02
JB 51-I-006
TO OUTFALL SYSTEM

M
RO-V-3048

2 1/2"-ROC-SS- 12
NOTE 6

PROVIDED BY RO SYSTEM SUPPLIER

NOTES:

1. SEE LEGEND AND ABBREVIATIONS ON DRAWINGS 00-I-001, 00-I-002 AND 00-I-003.
2. AREA CODE IS 51 UNLESS OTHERWISE NOTED. SYSTEM CODE IS RO UNLESS OTHERWISE NOTED.
3. LOCAL CONTROL DEVICES SUCH AS INDICATING LIGHTS AND SWITCHES, LOCATED ON MCCs OR AT DRIVEN EQUIPMENT, MAY NOT BE SHOWN ON THIS P&ID.
4. PIPING SIZES ARE PRELIMINARY AND TO BE FINALIZED BY ROSS.
5. CIP BLEED VALVE.
6. HIGH PRESSURE SECOND STAGE CONCENTRATE PIPING TO BE DUPLEX STAINLESS STEEL, REFER TO SPECIFICATIONS.
7. PROVIDE REMOVABLE SPOOLS, SWAPABLE FITTING, OR BLOCK AND BLEED VALVING TO PREVENT POTENTIAL CROSS-CONNECTION OF PERMATE AND CIP RETURN. FURNISH SUITABLE BLIND FLANGES TO REPLACE REMOVABLE SPOOL OR SWAPABLE FITTING AS REQUIRED.

* PROVIDED BY RO SYSTEM SUPPLIER

60% SUBMITTAL - NOT FOR CONSTRUCTION

NO.	BY	CHK	APP	DATE	REVISIONS AND RECORD OF USE
B	BLB	TAH	EVB	7/30/2019	60% SUBMITTAL
A	BLB	TAH	EVB	3/5/2019	30% SUBMITTAL

BLACK & VEATCH
JOINT VENTURE
FILANC
BLACK & VEATCH

CITY OF MORRO BAY
MORRO BAY WATER RECLAMATION FACILITY (WRF)

RO/UV BUILDING - RO SYSTEM P&ID
RO PERMEATE/CONCENTRATE, UNIT 3

DESIGNED: BLB, ADV
DETAILED: PVR
CHECKED: TAH
APPROVED:
DATE:

0 1/2 1
IF THIS BAR DOES NOT MEASURE 1" THEN DRAWING IS NOT TO FULL SCALE

PROJECT NO. 400530

51-I-008
SHEET OF XXX

PLOTTED: 30-07-2019 14:58:35
D400530

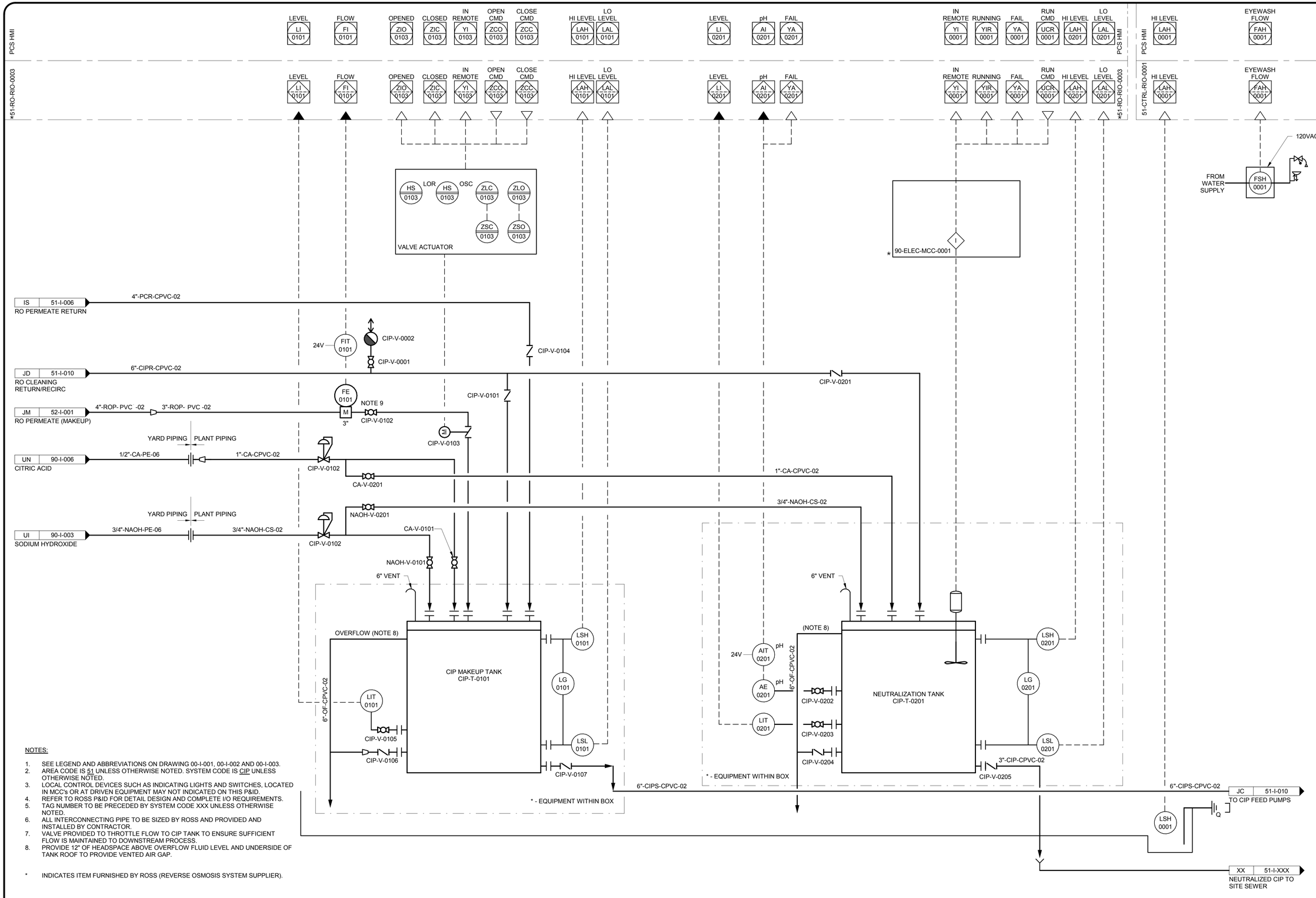

NOTES:

1. SEE LEGEND AND ABBREVIATIONS ON DRAWING 00-I-001, 00-I-002 AND 00-I-003.
2. AREA CODE IS 51 UNLESS OTHERWISE NOTED. SYSTEM CODE IS CIP UNLESS OTHERWISE NOTED.
3. LOCAL CONTROL DEVICES SUCH AS INDICATING LIGHTS AND SWITCHES, LOCATED IN MCC'S OR AT DRIVEN EQUIPMENT MAY NOT INDICATED ON THIS P&ID.
4. REFER TO ROSS P&ID FOR DETAIL DESIGN AND COMPLETE I/O REQUIREMENTS.
5. TAG NUMBER TO BE PRECEDED BY SYSTEM CODE XXX UNLESS OTHERWISE NOTED.
6. ALL INTERCONNECTING PIPE TO BE SIZED BY ROSS AND PROVIDED AND INSTALLED BY CONTRACTOR.
7. VALVE PROVIDED TO THROTTLE FLOW TO CIP TANK TO ENSURE SUFFICIENT FLOW IS MAINTAINED TO DOWNSTREAM PROCESS.
8. PROVIDE 12" OF HEADSPACE ABOVE OVERFLOW FLUID LEVEL AND UNDERSIDE OF TANK ROOF TO PROVIDE VENTED AIR GAP.

* INDICATES ITEM FURNISHED BY ROSS (REVERSE OSMOSIS SYSTEM SUPPLIER).

60% SUBMITTAL - NOT FOR CONSTRUCTION

NO.	BY	CHK	APP	DATE	REVISIONS AND RECORD OF USE
B	BLB	TAH	EVB	7/30/2019	60% SUBMITTAL
A	BLB	TAH	EVB	3/5/2019	30% SUBMITTAL

BLACK & VEATCH
JOINT VENTURE
FILANC
BLACK & VEATCH

CITY OF MORRO BAY
MORRO BAY WATER
RECLAMATION FACILITY (WRF)

RO/UV BUILDING - RO SYSTEM
P&ID
RO CIP TANKS

DESIGNED: BLB, ADV
DETAILED: PVR
CHECKED: TAH
APPROVED:
DATE:

0 1/2 1
IF THIS BAR DOES NOT MEASURE 1" THEN DRAWING IS NOT TO FULL SCALE

PROJECT NO.
400530

51-I-009
SHEET
OF XXX

PLOTTED: 30-07-2019 14:58:36
D400530

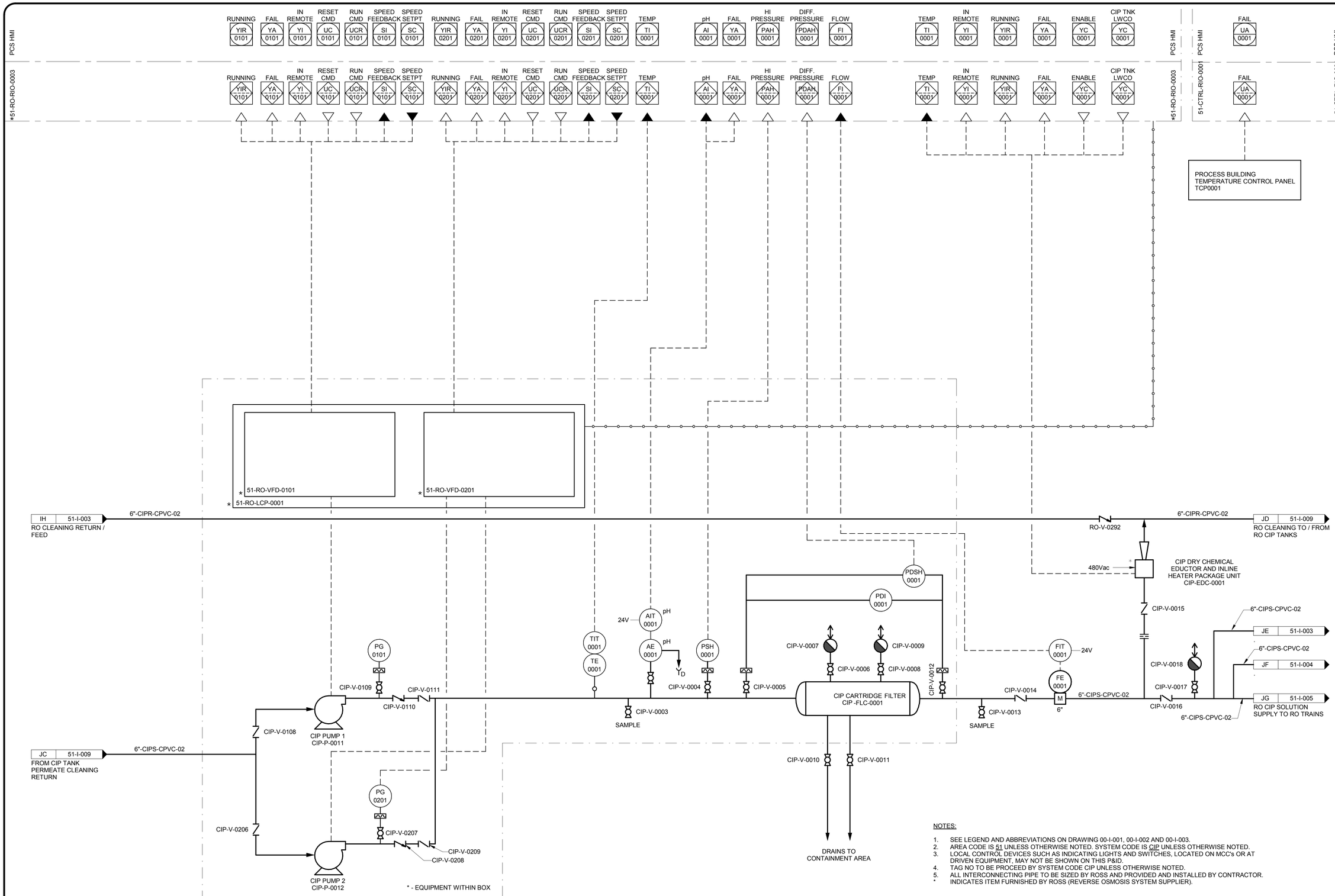

NOTES:

1. SEE LEGEND AND ABBREVIATIONS ON DRAWING 00-I-001, 00-I-002 AND 00-I-003.
2. AREA CODE IS 51 UNLESS OTHERWISE NOTED. SYSTEM CODE IS CIP UNLESS OTHERWISE NOTED.
3. LOCAL CONTROL DEVICES SUCH AS INDICATING LIGHTS AND SWITCHES, LOCATED ON MCC's OR AT DRIVEN EQUIPMENT, MAY NOT BE SHOWN ON THIS P&ID.
4. TAG NO TO BE PROCEED BY SYSTEM CODE CIP UNLESS OTHERWISE NOTED.
5. ALL INTERCONNECTING PIPE TO BE SIZED BY ROSS AND PROVIDED AND INSTALLED BY CONTRACTOR.

* INDICATES ITEM FURNISHED BY ROSS (REVERSE OSMOSIS SYSTEM SUPPLIER).

60% SUBMITTAL - NOT FOR CONSTRUCTION

NO.	BY	CHK	APP
B	BLB	TAH	EVB
A	BLB	TAH	EVB

REVISIONS AND RECORD OF USE

DATE	
7/30/2019	60% SUBMITTAL
3/5/2019	30% SUBMITTAL

BLACK & VEATCH

JOINT VENTURE

FILANC

CITY OF MORRO BAY
MORRO BAY WATER RECLAMATION FACILITY (WRF)

RO/UV BUILDING - RO SYSTEM
P&ID
RO CIP PUMPS

DESIGNED: BLB, ADV
DETAILED: PVR
CHECKED: TAH
APPROVED:
DATE:

0 1/2 1
IF THIS BAR DOES NOT MEASURE 1" THEN DRAWING IS NOT TO FULL SCALE

PROJECT NO. 400530

51-I-010
SHEET OF XXX

PLOTTED: 30-07-2019 14:58:36
D400530

PCS HMI

*51-RO-RIO-0005

OPENED ZIO 0013 | CLOSED ZIC 0013 | IN REMOTE YI 0013 | OPEN CMD ZCO 0013 | CLOSE CMD ZCC 0013 | LEVEL LI 0001 | LO LEVEL LAL 0001 | HI LEVEL LAH 0001

IN REMOTE YI 0102 | RUNNING YIR 0102 | FAIL UA 0102 | RUN CMD UCR 0102 | SPEED SETPT SC 0102 | SPEED FEEDBACK SI 0102

IN REMOTE YI 0202 | RUNNING YIR 0202 | FAIL UA 0202 | RUN CMD UCR 0202 | SPEED SETPT SC 0202 | SPEED FEEDBACK SI 0202

FLOW FI 0002

HS 0013 | LOR | HS 0013 | OSC | ZLC 0013 | ZLO 0013 | ZSC 0013 | ZSO 0013

VALVE ACTUATOR

NOTE 6

NOTE 7 (TYPICAL)

* 51-RO-VFD-0102

* 51-RO-VFD-0202

* 51-RO-LCP-0002

4"-ROP- PVC -02

JK 52-I-001 FROM RO PERMEATE

M

RO-V-0013

2 1/2"-ROP- PVC -02

RO-V-0015

LSH 0001

OVERFLOW (NOTE 8)

2500 GAL RO FLUSH TANK
RO-T-0001

*

LG 0001

LIT 0001

RO-V-0014

LSL 0001

RO-V-0016

* - EQUIPMENT WITHIN BOX

4"-ROP- PVC -02

RO-V-0017

RO-V-0018

2"-DRN- PVC -02

4"-OF- PVC -02

4"-OF- PVC -02

DRAIN TO TRENCH

4"-ROP- PVC -02

RO-V-0116

RO FLUSH PUMP NO.1
RO-P-0102

1"-RO-PVC-02

RO-V-0117

PG 0103

RO-V-0118

RO-V-0119

RO-V-0120

FIT 0002 — 24V

FE 0002

M

4"

4"-FF- PVC -02 | JH 51-I-002 | TO RO UNIT NO.1

4"-FF- PVC -02 | JI 51-I-002 | TO RO UNIT NO.2

4"-FF- PVC -02 | JJ 51-I-002 | TO RO UNIT NO.3

4"-ROP- PVC -02

RO-V-0216

RO FLUSH PUMP NO.2
RO-P-0202

1"-RO-PVC-02

RO-V-0217

PG 0203

RO-V-0218

4"-FF- PVC -02

RO-V-0219

RO-V-0220

NOTES:

1. SEE LEGEND AND ABBREVIATIONS ON DRAWINGS 00-I-001, 00-I-00 AND 00-I-003.
2. AREA CODE IS 51 UNLESS OTHERWISE NOTED. SYSTEM CODE IS RO UNLESS OTHERWISE NOTED.
3. LOCAL CONTROL DEVICES SUCH AS INDICATING LIGHTS AND SWITCHES, LOCATED ON MCCs OR AT DRIVEN EQUIPMENT, MAY NOT BE SHOWN ON THIS P&ID.
4. ALL INSTRUMENT TAGS SHALL HAVE A SYSTEM CODE OF ROF UNLESS OTHERWISE NOTED.
5. INSTRUMENTATION AND CONTROLS ARE TYPICALLY FOR VARIABLE SPEED DRIVES FOR RO FEED PUMPS. NOT ALL PANEL COMPONENTS SHOWN. SEE SPECIFICATIONS FOR INSTALLATIONS FOR REQUIREMENTS.
6. PIPE DIAMETERS INDICATED ARE FOR REFERENCE ONLY. PIPE DIAMETERS TO BE DETERMINED / CONFIRMED BY ROSS.
7. ETHERNET/IP CAT6 CONNECTION TO CIP-RIO NETWORK SWITCH.
8. PROVIDE 12" OF HEADSPACE ABOVE OVERFLOW FLUID LEVEL AND UNDERSIDE OF TANK ROOF TO PROVIDE VENTED AIR GAP.

* PROVIDED BY RO SYSTEM SUPPLIER

60% SUBMITTAL - NOT FOR CONSTRUCTION

NO.	DATE	REVISIONS AND RECORD OF USE	BY	CHK	APP
B	7/30/2019	60% SUBMITTAL	BLB	TAH	EVB
A	3/5/2019	30% SUBMITTAL	BLB	TAH	EVB

BLACK & VEATCH

JOINT VENTURE

FILANC

BLACK & VEATCH

CITY OF MORRO BAY
MORRO BAY WATER
RECLAMATION FACILITY (WRF)

RO/UV BUILDING - RO SYSTEM
P&ID
RO FLUSH SYSTEM

DESIGNED: BLB, ADV
DETAILED: PVR
CHECKED: TAH
APPROVED:
DATE:

0 1/2 1

IF THIS BAR DOES NOT MEASURE 1" THEN DRAWING IS NOT TO FULL SCALE

PROJECT NO.
400530

51-I-011

SHEET
OF XXX

PLOTTED: 30-07-2019 14:58:36

D400530

PCS HMI

FREE CL2 AI 0004 | UVT ANALYZER AI 0005 | pH AI 0002 | TOTAL CL2 AI 0003 | TOTAL CL2 AI 0001 | TOTAL CL2 AI 0009 | FREE CL2 AI 0008 | pH AI 0007 | UVT ANALYZER AI 0006 | RUN CMD UCR 0203 | RUN CMD UCR 0103 | RUN CMD UCR 0204 | RUN CMD UCR 0104

TYPICAL FOR UV-V-0014

FLOW FI 0001 | OPENED ZIO 0012 | CLOSED ZIC 0012 | IN REMOTE YI 0012 | OPEN CMD ZCO 0012 | CLOSE CMD ZCC 0012 | OPENED ZIO 0013 | CLOSED ZIC 0013 | IN REMOTE YI 0013 | OPEN CMD ZCO 0013 | CLOSE CMD ZCC 0013

PCS HMI

52-UV-PLC-0001

UV MASTER CONTROL PANEL
52-LCP-0001

120Vac

120V

FREE CL2 AI 0004 | UVT ANALYZER AI 0005 | pH AI 0002 | TOTAL CL2 AI 0003 | TOTAL CL2 AI 0001 | TOTAL CL2 AI 0009 | FREE CL2 AI 0008 | pH AI 0007 | UVT ANALYZER AI 0006 | RUN CMD UCR 0203 | RUN CMD UCR 0103 | RUN CMD UCR 0204 | RUN CMD UCR 0104 | FLOW FI 0001 | OPENED ZIO 0012 | CLOSED ZIC 0012 | IN REMOTE YI 0012 | OPEN CMD ZCO 0012 | CLOSE CMD ZCC 0012 | OPENED ZIO 0013 | CLOSED ZIC 0013 | IN REMOTE YI 0013 | OPEN CMD ZCO 0013 | CLOSE CMD ZCC 0013

52-UV-PLC-0001

UV MASTER CONTROL PANEL
52-UV-LCP-0001

YARD PIPING | PLANT PIPING

UE | 90-I-002 — 1/2"-NACL-TEFL-01
SODIUM HYPOCHLORITE

YARD PIPING | PLANT PIPING

UQ | 90-I-007 — 1/2"-SA-TEFL-01
SULPHURIC ACID

8"-ROP- PVC -02

IY | 51-I-008
FROM RO TRAIN 3

IU | 51-I-007
FROM RO TRAIN 2

IQ | 51-I-006
FROM RO TRAIN 1

4"-ROP- PVC -02

TO UV MASTER CONTROL PANEL PLC

UV-V-0014

NOTE 7

HS04-V-0001 | HS04-V-0002 | HS04-V-0003

1"-SA-CPVC-02

1"-NACL-CPVC-02

NOCL-V-0001 | NOCL-V-0002 | NOCL-V-0003

UV-V-0001 | UV-V-0002

STATIC MIXER
UV-MXS-0001

480V — LCP-0101

480V — LCP-0201

8"-ROP- PVC -02 — NOTE 6 — UV-V-0101

UV DISINFECTION UNIT
UV-UVU-0101

8"-UVE- PVC -02 — NC — UV-V-0103 — NOTE 8

UV-V-0004 | UV-V-0102

8"-ROP- PVC -02 — NOTE 6 — UV-V-0201

UV DISINFECTION UNIT
UV-UVU-0201

8"-UVE- PVC -02 — NC — UV-V-0203 — NOTE 8

UV-V-0202

1/2"-ROP- PVC -02

1/2"-ROP- PVC -02

1/2"-ROP- PVC -02

1"-ROP- PVC -02

1/2"-ROP- PVC -02

4"-ROP- PVC -02

51-I-011 | JK
TO RO FLUSH TANK

4"-ROP- PVC -02

51-I-009 | JM
TO RO CIP TANK

4"-ROP- PVC -02

24V — FIT 0001 — FE 0001 — 8"

UV-V-0007

M — FC — UV-V-0012

8"-UVE- PVC -02 — JN | 61-I-001
TO CALCITE FILTERS

VALVE ACTUATOR
HS 0012 | LOR | HS 0012 | OSC | ZLC 0012 | ZLO 0012 | ZSC 0012 | ZSO 0012

VALVE ACTUATOR
HS 0013 | LOR | HS 0013 | OSC | ZLC 0013 | ZLO 0013 | ZSC 0013 | ZSO 0013

M — FO — UV-V-0013

8"-UVE- PVC -02 — JO | 64-I-001
OFFSPEC EFFLUENT TO OUTFALL BALANCING TANK

FREE CL2 AIT 0004 | UVT AIT 0005 | pH AIT 0002 | TOTAL CL2 AIT 0003 | TOTAL CL2 AIT 0001 | TOTAL CL2 AIT 0009 | FREE CL2 AIT 0008 | pH AIT 0007 | UVT AIT 0006

AE 0004 | AE 0005 | AE 0002 | AE 0003 | AE 0001 | AE 0009 | AE 0008 | AE 0007 | AE 0006

S — UV-V-0203 | S — UV-V-0103 | S — UV-V-0204 | S — UV-V-0104

FG 0004 | FG 0004 | FG 0005 | FG 0005

UV-V-0005 | UV-V-0006 | UV-V-0003 | UV-V-0011 | UV-V-0010 | UV-V-0009 | UV-V-0008

FG 0002 | FG 0003 | FG 0001 | FG 0009 | FG 0008 | FG 0007 | FG 0006

UV ANALYZER PANEL

120V

Y_D

NOTES:

1. SEE LEGEND AND ABBREVIATIONS ON DRAWINGS 00-I-001, 00-I-002 AND 00-I-003.
2. AREA CODE IS 52 UNLESS OTHERWISE NOTED. SYSTEM CODE IS UV UNLESS OTHERWISE NOTED.
3. LOCAL CONTROL DEVICES SUCH AS INDICATING LIGHTS AND SWITCHES, LOCATED ON MCCs OR AT DRIVEN EQUIPMENT, MAY NOT BE SHOWN ON THIS P&ID.
4. FOR DRAWING CLARITY, VALVE TAG NUMBER ONLY SHOW THE SEQUENCE NUMBER UNLESS OTHERWISE NOTED.
5. INSTRUMENTATION PANEL PROVIDED BY UV SUPPLIER, FINAL INSTRUMENTATION SELECTION TO BE CONFIRMED DURING FINAL EQUIPMENT SELECTION.
6. UV INFLUENT PIPING SIZE AND STRAIGHT RUNS TO BE DETERMINED BY THE SELECTED UV SUPPLIER.
7. ELEVATED PIPING LOOP WITH AUTOMATIC DRAIN, TO PREVENT POSSIBILITY OF CHLORINATED WATER INTERACTING WITH RO EQUIPMENT.
8. DRAIN VALVES TO BE OPENED WHEN UV NOT IN SERVICE TO PREVENT FLOW PASSAGE THROUGHT UNITES. ROUTE DISCHARGE TO DRAIN.

60% SUBMITTAL - NOT FOR CONSTRUCTION

NO.	BY	CHK	APP	DATE	REVISIONS AND RECORD OF USE
B	BL	BT	AH	EVB	60% SUBMITTAL
A	BL	BT	AH	EVB	30% SUBMITTAL
				7/30/2019	
				3/5/2019	

BLACK & VEATCH
JOINT VENTURE
FILANC
BLACK & VEATCH

CITY OF MORRO BAY
MORRO BAY WATER RECLAMATION FACILITY (WRF)

RO/UV BUILDING - UV SYSTEM
P&ID
UV/AOP SYSTEM

DESIGNED: Designer
DETAILED: Author
CHECKED: Checker
APPROVED: Approver
DATE:

0 1/2 1
IF THIS BAR DOES NOT MEASURE 1" THEN DRAWING IS NOT TO FULL SCALE

PROJECT NO.
400530

52-I-001
SHEET
OF XXX

PLOTTED: 30-07-2019 14:58:37
D400530

PCS HMI

51-CTRL-RIO-0001

FLOW FI 0001 | IN REMOTE YI 0001 | OPENED ZIO 0001 | CLOSED ZIC 0001 | OPEN CMD ZCO 0001 | CLOSE CMD ZCC 0001 | LEVEL LI 0001 | DIFF. PRESSURE PDAH 0101 | DIFF. PRESSURE PDAH 0201 | IN REMOTE YI 0001 | RUNNING YIR 0001 | FAIL YA 0001 | RUN CMD UCR 0001 | SPEED SETPT SC 0001 | SPEED FEEDBACK SI 0001

HS 0001 LOR HS 0001 OSC | ZLC 0001 | ZLO 0001 | ZSC 0001 | ZSO 0001 | 480V

VALVE ACTUATOR

VFD-0001

LIT 0001 — 24V

LE 0001 US

10"-UVE-PVC-02

PG 0002

CAL-V-0004

8"-UVE-PVC-02

KA | 62-I-001

TO PRODUCT WATER TANK

CAL-V-0104 | CAL-V-0105 | CAL-V-0204 | CAL-V-0205

CAL-V-0103 | CAL-V-0203

PDS 0101 | PDS 0201

CALCITE FILTER CAL-FLT-0101

CALCITE FILTER CAL-FLT-0201

PG 0001

CAL-V-0003

UV-V-0102

CAL-V-0202

CAL-V-0206

CAL-V-0101 | CAL-V-0106 | CAL-V-0201

CAL-V-0107 | CAL-V-0207

12"-D-PVC-02

BACKWASH WASTE HOLDING TANK CAL-T-0001

24V — FIT 0001

FE 0001

M

3"

3"-D-PVC-02

TO SEWER OR STORM DRAIN

CAL-V-0001

JN | 52-I-001

FROM UV SYSTEM EFFLUENT

8"-UVE-PVC-02

10"-IPR-PVC-02

FLUSH PUMP

PG 0003

CAL-V-0006

CAL-V-0008 | CAL-V-0007

10"-IPR-PVC-02

62-I-001 | LA

FROM PRODUCT WATER TANK

CAL-V-0005

FLUSH PUMP CAL-P-0001

NOTES:

1. SEE LEGEND AND ABBREVIATIONS ON DRAWINGS 00-I-001, 00-I-002 AND 00-I-003.
2. AREA CODE IS 61 UNLESS OTHERWISE NOTED. SYSTEM CODE IS CAL UNLESS OTHERWISE NOTED.

60% SUBMITTAL- NOT FOR CONSTRUCTION

NO.	BY	CHK	APP	DATE	REVISIONS AND RECORD OF USE
B	BLB	TAH	EVB	7/30/2019	60% SUBMITTAL
A	BLB	TAH	EVB	3/5/2019	30% SUBMITTAL

BLACK & VEATCH

JOINT VENTURE

FILANC

BLACK & VEATCH

CITY OF MORRO BAY
MORRO BAY WATER
RECLAMATION FACILITY (WRF)

PRODUCT WATER AREA - CALCITE CONTACTOR
P&ID
CALCITE REMINERALIZATION SYSTEM

DESIGNED: BLB, KEZ
DETAILED: PVR
CHECKED: TAH
APPROVED:
DATE:

0 1/2 1

IF THIS BAR DOES NOT MEASURE 1" THEN DRAWING IS NOT TO FULL SCALE

PROJECT NO. 400530

61-I-001

SHEET OF

PLOTTED: 30-07-2019 12:54:07

D400530

PCS HMI

51-CTRL-RIO-0001

LEVEL LI 0001

HI-HI LEVEL LAHH 0001

LO-LO LEVEL LALL 0001

CL2 AI 0001 / FAIL YA 0001

COND AI 0002 / FAIL YA 0002

pH AI 0003 / FAIL YA 0003

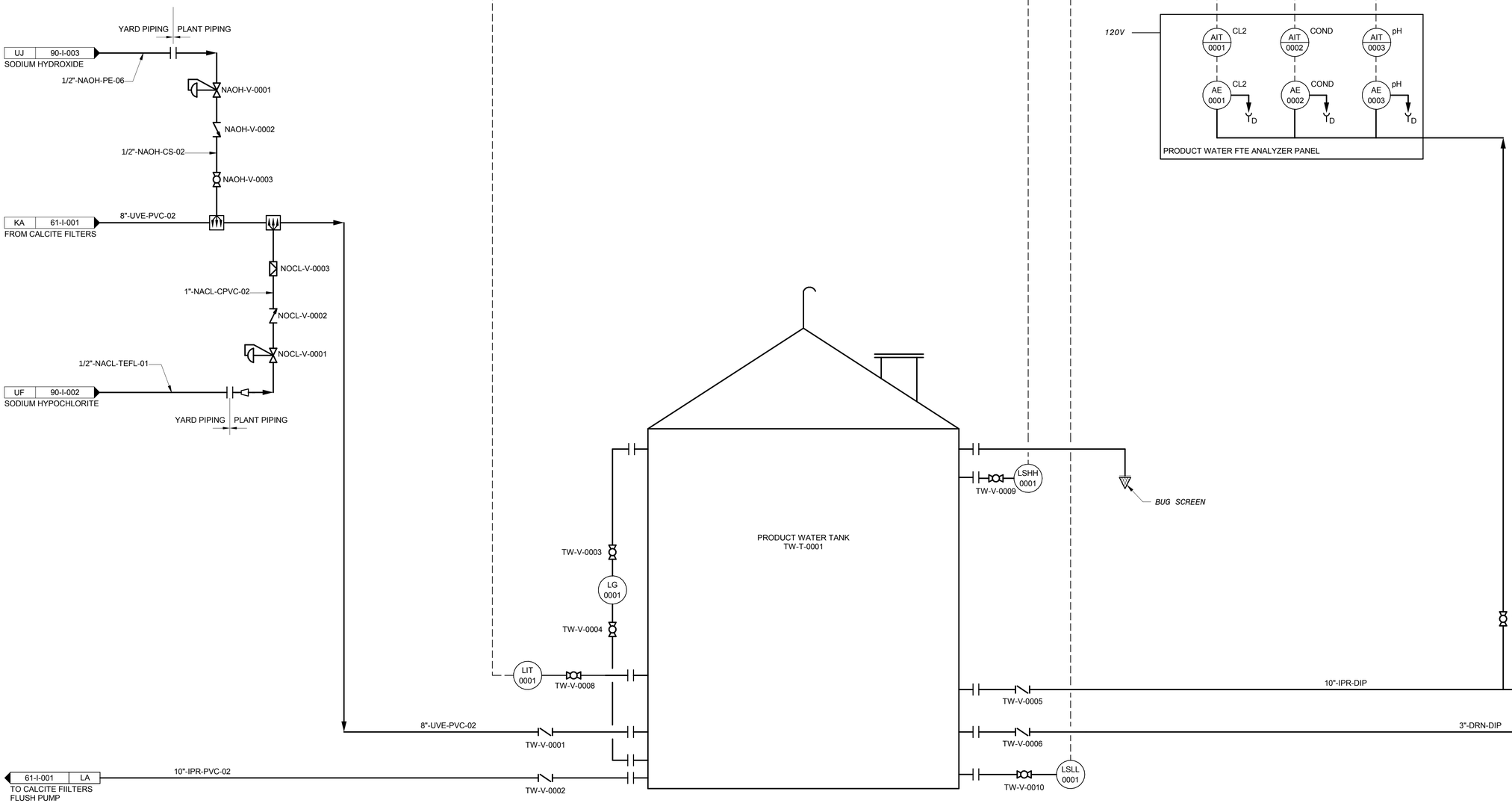

NOTES:

1. SEE LEGEND AND ABBREVIATIONS ON DRAWINGS 00-I-001, 00-I-002 AND 00-I-003.
2. AREA CODE IS 62 UNLESS OTHERWISE NOTED. SYSTEM CODE IS TW UNLESS OTHERWISE NOTED.
3. LOCAL CONTROL DEVICES SUCH AS INDICATING LIGHTS AND SWITCHES, LOCATED ON MCCs OR AT DRIVEN EQUIPMENT, MAY NOT BE SHOWN ON THIS P&ID.

60% SUBMITTAL - NOT FOR CONSTRUCTION

NO.	BY	CHK	APP
B	BLB	TAH	EVB
A	BLB	TAH	EVB

DATE	REVISIONS AND RECORD OF USE
7/30/2019	60% SUBMITTAL
3/5/2019	30% SUBMITTAL

BLACK & VEATCH JOINT VENTURE FILANC BLACK & VEATCH

CITY OF MORRO BAY
MORRO BAY WATER RECLAMATION FACILITY (WRF)

PRODUCT WATER AREA - IPR PRODUCT WATER STORAGE TANK P&ID
IPR PRODUCT WATER STORAGE TANK

DESIGNED: BLB, KEZ
DETAILED: PVR
CHECKED: TAH
APPROVED:
DATE:

0 1/2 1
IF THIS BAR DOES NOT MEASURE 1" THEN DRAWING IS NOT TO FULL SCALE

PROJECT NO. 400530

62-I-001
SHEET OF

PLOTTED: 30-07-2019 12:54:08
D400530

TYPICAL I/O & CONTROLS FOR IPR WATER PUMP NO. 2 & 3

PCS HMI

51-CTRL-RIO-0001

IN REMOTE	RUNNING	FAIL	RUN CMD	SPEED SETPT	SPEED FEEDBACK	HI PRESSURE
YI 0101	YIR 0101	YA 0101	UCR 0101	SC 0101	SI 0101	PAH 0101

PRESSURE	FLOW	pH	FAIL
PI 0001	FI 0001	AI 0008	YA 0008

50-ELEC-MCC-0001

LB 62-I-001
FROM PRODUCT WATER TANK

10"-IPR-DIP

10"-IPR-DIP

6"-IPR-DIP TW-V-0101

IPR PUMP NO. 1
TW-P-0101

6"-IPR-DIP TW-V-0102

PSH 0101

PG 0101

TW-V-0103

TW-V-0106

TW-V-0107

6"-IPR-DIP TW-V-0104 TW-V-0105

SEE TYPICAL I/O & CONTROLS

6"-IPR-DIP TW-V-0201

IPR PUMP NO. 2
TW-P-0201

6"-IPR-DIP TW-V-0202

PSH 0201

PG 0201

TW-V-0203

TW-V-0206

TW-V-0207

6"-IPR-DIP TW-V-0204 TW-V-0205

SEE TYPICAL I/O & CONTROLS

6"-IPR-DIP TW-V-0301

IPR PUMP NO. 3
TW-P-0301

6"-IPR-DIP TW-V-0302

PSH 0301

PG 0301

TW-V-0303

TW-V-0306

TW-V-0307

6"-IPR-DIP TW-V-0304 TW-V-0305

PIT 0001

TW-V-0001

8"-IPR-DIP

24V — AIT 0008 pH

AE 0008 pH

24V — FIT 0001

FE 0001

M

6"

TW-V-0002

A/G B/G

6"-IPR-DIP

10"-IPR-DIP

10"-IPR-PVC-02

RO PERMEATE TO GROUNDWATER DISCHARGE

NOTES:

1. SEE LEGEND AND ABBREVIATIONS ON DRAWING 00-I-001, 00-I-002 AND 00-I-003.
2. AREA CODE IS 63 UNLESS OTHERWISE NOTED. SYSTEM CODE IS TW UNLESS OTHERWISE NOTED.
3. LOCAL CONTROL DEVICES SUCH AS INDICATING LIGHTS AND SWITCHES, LOCATED IN MCC's OR AT DRIVEN EQUIPMENT MAY NOT INDICATED ON THIS P&ID.

60% SUBMITTAL- NOT FOR CONSTRUCTION

NO.	BY	CHK	APP	DATE	REVISIONS AND RECORD OF USE
B	BLB	TAH	EVB	7/30/2019	60% SUBMITTAL
A	BLB	TAH	EVB	3/5/2019	30% SUBMITTAL

BLACK & VEATCH

JOINT VENTURE

FILANC

BLACK & VEATCH

CITY OF MORRO BAY
MORRO BAY WATER
RECLAMATION FACILITY (WRF)

PRODUCT WATER AREA - IPR PRODUCT WATER
PUMP STATION P&ID
IPR PUMP STATION

DESIGNED: BLB, KEZ
DETAILED: PVR
CHECKED: TAH
APPROVED:
DATE:

0 1/2 1

IF THIS BAR DOES NOT MEASURE 1" THEN DRAWING IS NOT TO FULL SCALE

PROJECT NO.
400530

63-I-001
SHEET
OF

PLOTTED: 30-07-2019 12:54:10

D400530

PCS HMI

51-CTRL-RIO-0001

LEVEL LI 0001

HI LEVEL LAH 0001

LOW LEVEL LSL 0001

TYPICAL I/O & CONTROLS FOR OUTFALL PUMP NO. 2, 3, & 4

RUN CMD UCR 0101 | IN REMOTE YI 0101 | RUNNING YIR 0101 | FAULT YA 0101 | SPEED FEEDBACK SI 0101 | SPEED SETPT SC 0101

FLOW FI 0001

50-ELEC-MCC-0001

IR 51-I-006
FROM RO PERMEATE
8"-ROP-PVC-02

IA 51-I-001
FROM ROP BYPASS
8"-ROF-PVC-02

JO 52-I-001
OFF SPEC UV EFFLUENT
8"-UVE-PVC-02

GC 33-I-001
RO FEED TANKS OVERFLOW
12"-MFF-PVC-02
12"-MFF-DIP

RA 73-I-001
FROM AQUAPRIME FILTERS
18"-FOW-DIP
TW-V-0002

LG 0001
LIT 0001
TW-V-0021

OUTFALL BALANCING TANK
TW-T-0001

LSH 0001
TW-V-0022
20"-OF-DIP

20"-POW-DIP
TW-V-0004
TW-V-0023
LSL 0001
TW-V-0005
3"-DRN-DIP

SEE TYPICAL I/O AND CONTROLS
PG 0401
TW-V-0402
12"-POW-DIP
TW-V-0401
TW-V-0403
TW-V-0404
OUTFALL PUMP NO.4
TW-P-0401

SEE TYPICAL I/O AND CONTROLS
PG 0301
TW-V-0302
12"-POW-DIP
TW-V-0301
TW-V-0303
TW-V-0304
OUTFALL PUMP NO.3
TW-P-0301

SEE TYPICAL I/O AND CONTROLS
PG 0201
TW-V-0202
12"-POW-DIP
TW-V-0201
TW-V-0203
TW-V-0204
OUTFALL PUMP NO.2
TW-P-0201

PG 0101
TW-V-0102
12"-POW-DIP
TW-V-0101
TW-V-0103
TW-V-0104
OUTFALL PUMP NO.1
TW-P-0101

18"-POW-DIP

24V
FIT 0001
FE 0001
M
12"

A/G B/G
(DOUBLE CML) 18"-POW-DIP
(DOUBLE CML) 48"-POW-DIP/STL
NOTE 4
NA 65-I-001
TO DISINFECTION SYSTEM

YARD PIPING | PLANT PIPING

UA 90-I-001
SODIUM HYPOCHLORITE
1/2"-NACL-TEFL-01
1"-NACL-CPVC-02

NOCL-V-0001 NOCL-V-0002

NOTES:

1. SEE LEGEND AND ABBREVIATIONS ON DRAWING 00-I-001, 00-I-002 AND 00-I-003.
2. AREA CODE IS 64 UNLESS OTHERWISE NOTED. SYSTEM CODE IS TW UNLESS OTHERWISE NOTED.
3. LOCAL CONTROL DEVICES SUCH AS INDICATING LIGHTS AND SWITCHES, LOCATED ON MCC's OR AT DRIVEN EQUIPMENT, MAY NOT BE SHOWN ON THIS P&ID.
4. OCEAN OUTFALL PIPING INCREASE TO PROVIDE VOLUME REQUIRED FOR FULL DISINFECTION PRIOR TO DECHLORINATION.

60% SUBMITTAL - NOT FOR CONSTRUCTION

NO.	DATE	BY	CHK	APP
B	7/30/2019	BLB	TAH	EVB
A	3/5/2019	BLB	TAH	EVB

REVISIONS AND RECORD OF USE

60% SUBMITTAL
30% SUBMITTAL

BLACK & VEATCH
JOINT VENTURE
FILANC
BLACK & VEATCH

CITY OF MORRO BAY
MORRO BAY WATER RECLAMATION FACILITY (WRF)

PRODUCT WATER AREA - OUTFALL PUMP STATION P&ID
OUTFALL TANK & PUMPS

DESIGNED: BLB, KEZ
DETAILED: PVR
CHECKED: TAH
APPROVED:
DATE:

0 1/2 1
IF THIS BAR DOES NOT MEASURE 1" THEN DRAWING IS NOT TO FULL SCALE

PROJECT NO. 400530

64-I-001
SHEET
OF

PLOTTED: 30-07-2019 12:54:10
D400530

PCS HMI

51-CTRL-RIO-0001

CL2 AI 0001 | FAIL YA 0001

FLOW FI 0001 | TRBL FA 0001

PCS HMI

51-CTRL-RIO-0001

CL2 AI 0001 | FAIL YA 0001

FLOW FI 0001 | TRBL FA 0001

NA 64-I-001
FROM OUTFALL PUMPS

(DOUBLE CML)
48"-POW-DIP / STL

78"-POW-SP

B/G A/G

36"-POW-SP

20"-POW-SP

AIT 0001 — 24V

AE 0001 — CL2

COMPOSITE SAMPLER TW-SAMP-0001 — 120VAC

A/G B/G

20"-POW-SP

NOTE 7

20"-POW-PVC-02

TO OCEAN OUTFALL

B/G A/G

UB 90-I-001
SODIUM HYPOCHLORITE

1/2"-NACL-TEFL-01

CHEMICAL DUCT A/G

NOCL-V-0001 NOCL-V-0002

1"-NACL-CPVC-02

IT 51-I-006
RO CONCENTRATE

10"-ROC-PVC-02

A/G B/G

12"-ROC-PVC-02

NOTE 5

UL 90-I-004
SODIUM BISULFITE

1/2"-NHS-PE-06

CHEMICAL DUCT A/G

1"-NHS-CPVC-02

NHS-V-0001 NHS-V-0002 NHS-V-0003

NOTES:

1. SEE LEGEND AND ABBREVIATIONS ON DRAWING 00-I-001, 00-I-002 AND 00-I-003.
2. AREA CODE IS 65 UNLESS OTHERWISE NOTED. SYSTEM CODE IS TW UNLESS OTHERWISE NOTED.
3. LOCAL CONTROL DEVICES SUCH AS INDICATING LIGHTS AND SWITCHES, LOCATED ON MCC's OR AT DRIVEN EQUIPMENT, MAY NOT BE SHOWN ON THIS P&ID.
4. OCEAN OUTFALL PIPING TO BE 16" UPHILL TO PROVIDE SUFFICIENT VELOCITY TO SCOUR OFF SOLIDS. WHEN DOWNHILL, PIPE TO INCREASE TO 48" TO PROVIDE VOLUME REQUIRED FOR FULL DISINFECTION PRIOR TO DECHLORINATION.
5. SITE PIPING TO HAVE MINIMUM VOLUME OF 110,000 GALLONS TO ENSURE PROPER DISINFECTION PRIOR TO OUTFALL.
6. SITE PIPING TO HAVE MINIMUM VOLUME OF 3,000 GALLONS TO ENSURE PROPER DISINFECTION PRIOR TO OUTFALL.
7. SEPARATION DISTANCE BETWEEN BISULFITE INJECTION AND CHLORINE MEASUREMENT TO BE VERIFIED ASSUME 20'.

60% SUBMITTAL- NOT FOR CONSTRUCTION

NO.	BY	CHK	APP	DATE	REVISIONS AND RECORD OF USE
B	BLB	TAH	EVB	7/30/2019	60% SUBMITTAL
A	BLB	TAH	EVB	3/5/2019	30% SUBMITTAL

BLACK & VEATCH

JOINT VENTURE

FILANC

BLACK & VEATCH

CITY OF MORRO BAY
MORRO BAY WATER
RECLAMATION FACILITY (WRF)

PRODUCT WATER AREA - TSINFECTION SYSTEM
P&ID
OUTFALL DISINFECTION SYSTEM

DESIGNED: BLB, KEZ
DETAILED: PVR
CHECKED: TAH
APPROVED:
DATE:

0 1/2 1
IF THIS BAR DOES NOT MEASURE 1" THEN DRAWING IS NOT TO FULL SCALE

PROJECT NO.
400530

65-I-001
SHEET
OF

PLOTTED: 30-07-2019 12:54:10

D400530

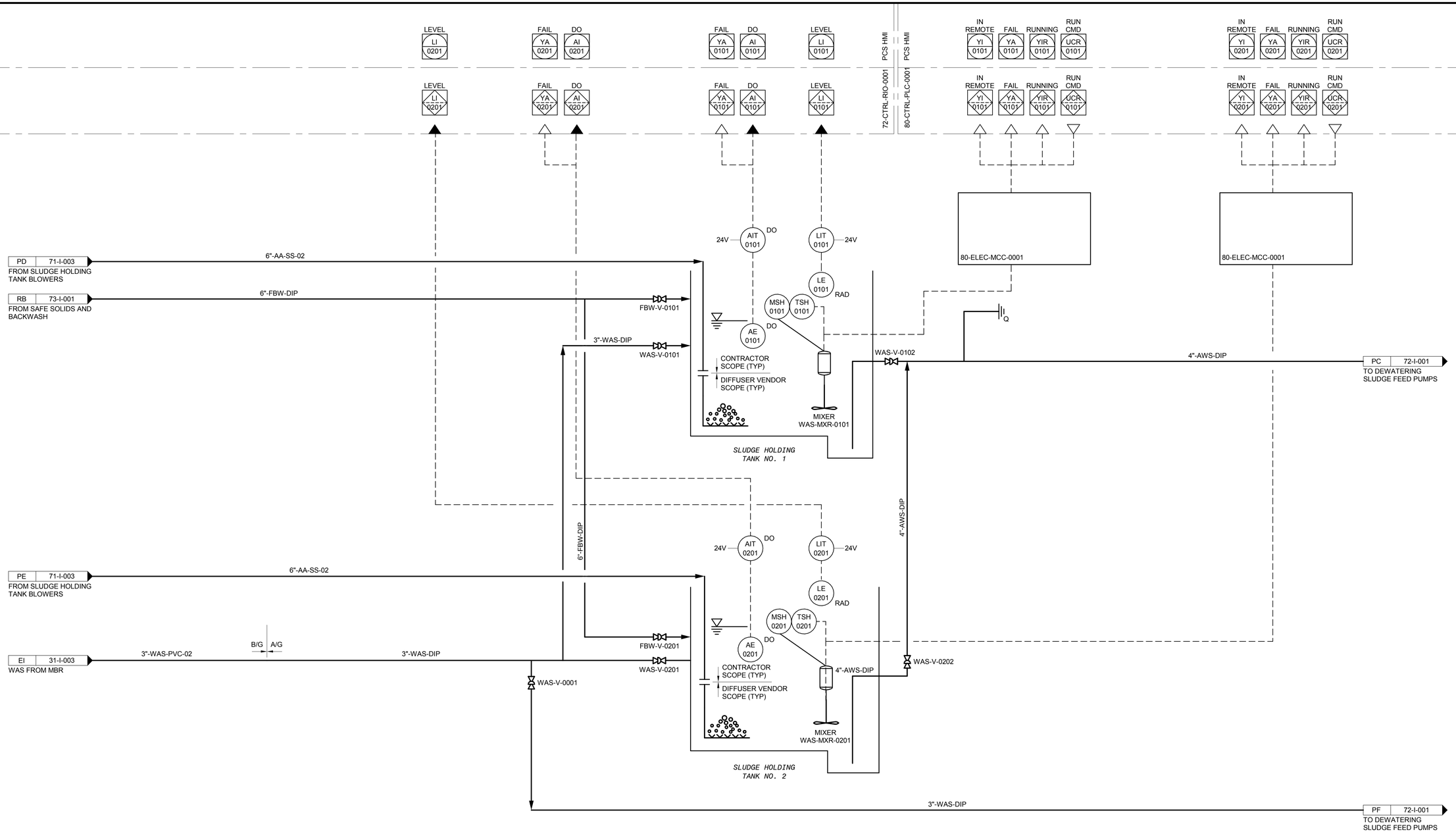

NOTES:
1. SEE LEGEND ON DRAWINGS 00-I-001, 00-I-002 AND 00-I-003.
2. AREA CODE IS 71 UNLESS OTHERWISE NOTED. SYSTEM CODE IS WAS UNLESS OTHERWISE INDICATED.
3. LOCAL CONTROL DEVICES SUCH AS INDICATING LIGHTS AND SWITCHES, LOCATED ON MCC'S OR AT DRIVEN EQUIPMENT, MAY NOT BE SHOWN ON THIS P&ID.

60% SUBMITTAL - NOT FOR CONSTRUCTION

NO.	BY	CHK	APP	DATE	REVISIONS AND RECORD OF USE
B	BLB	TAH	EVB	7/30/2019	60% SUBMITTAL
A	BLB	TAH	EVB	3/5/2019	30% SUBMITTAL

BLACK & VEATCH JOINT VENTURE
FILANC
BLACK & VEATCH

CITY OF MORRO BAY
MORRO BAY WATER RECLAMATION FACILITY (WRF)

RESIDUALS AREA - SLUDGE & SAFE SETTLE TANKS P&ID
SLUDGE HOLDING TANKS

DESIGNED: BLB, KEZ
DETAILED: PVR
CHECKED: TAH
APPROVED:
DATE:

0 1/2 1
IF THIS BAR DOES NOT MEASURE 1" THEN DRAWING IS NOT TO FULL SCALE

PROJECT NO. 400530

71-I-001
SHEET OF

PLOTTED: 30-07-2019 11:11:17
D400530

PCS HMI

72-CTRL-RIO-0001

HI-HI LEVEL
LAHH 0001

LEVEL
LI 0001

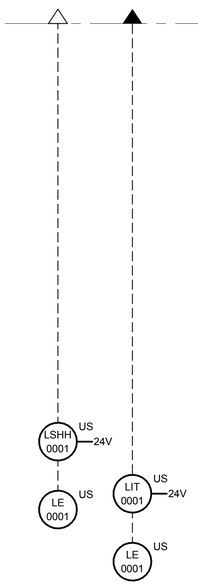

18"-FIW-DIP

PA | 73-I-001
TO SAFE FILTER

SAFE SETTLE TANK

BA | 22-I-001
FROM SAFE DIVESION BOX

24"-WWS-DIP

4"-DRN-DIP

PB | 22-I-001
TO DEWATERING SLUDGE FEED PUMPS

NOTES:
1. SEE LEGEND ON DRAWINGS 00-I-001, 00-I-002 AND 00-I-003.
2. AREA CODE IS 71 UNLESS OTHERWISE NOTED. SYSTEM CODE IS WAS UNLESS OTHERWISE INDICATED.
3. LOCAL CONTROL DEVICES SUCH AS INDICATING LIGHTS AND SWITCHES, LOCATED ON MCC'S OR AT DRIVEN EQUIPMENT, MAY NOT BE SHOWN ON THIS P&ID.

60% SUBMITTAL - NOT FOR CONSTRUCTION

NO.	BY	CHK	APP	DATE	REVISIONS AND RECORD OF USE
B	BLB	TAH	EVB	7/30/2019	60% SUBMITTAL
A	BLB	TAH	EVB	3/5/2019	30% SUBMITTAL

BLACK & VEATCH
JOINT VENTURE
FILANC
BLACK & VEATCH

CITY OF MORRO BAY
MORRO BAY WATER
RECLAMATION FACILITY (WRF)

RESIDUALS AREA - SLUDGE & SAFE SETTLE TANKS
P&ID
SAFE SETTLE SYSTEM

DESIGNED: BLB, KEZ
DETAILED: PVR
CHECKED: TAH
APPROVED:
DATE:

0 1/2 1
IF THIS BAR DOES NOT MEASURE 1" THEN DRAWING IS NOT TO FULL SCALE

PROJECT NO.
400530

71-I-002
SHEET
OF

PLOTTED: 30-07-2019 11:11:17
D400530

PCS HMI

80-CTRL-PLC-0001

SPEED CONTROL SC 0101 | SPEED INDCTN SI 0101 | WARNING YA 0101 | IN REMOTE YI 0101 | FAIL YA 0101 | RUNNING YIR 0101 | RUN CMD UCR 0101 | MOTOR CURRENT II 0101

SPEED CONTROL SC 0201 | SPEED INDCTN SI 0201 | WARNING YA 0201 | IN REMOTE YI 0201 | FAIL YA 0201 | RUNNING YIR 0201 | RUN CMD UCR 0201 | MOTOR CURRENT II 0201

PCS HMI

80-CTRL-PLC-0001

PCS HMI

72-CTRL-RIO-0001

PRESSURE PI 0102 | PRESSURE PI 0202

72-CTRL-RIO-0001

PCS HMI

80-ELEC-MMC-0002

80-ELEC-MMC-0002

FAIL YA | RUN YL | START HS | STOP HS | LOR HS

TAH | PDAH | PAH | PWR ON YL

LOCAL BLOWER CONTROL PANEL
(WITH LOCAL STARTER/DRIVE)
LCP-0101 *

FAIL YA | RUN YL | START HS | STOP HS | LOR HS

TAH | PDAH | PAH | PWR ON YL

LOCAL BLOWER CONTROL PANEL
(WITH LOCAL STARTER/DRIVE)
LCP-0201 *

* PDSH 0101 | PDI 0101 | PG 0101 | TSH 0101 | TG 0101 | TDSH 0101 | PG 0102 | PSH 0102 | PIT 0102

AIR-V-0101 | AIR-V-0102 | AIR-V-0103 | AIR-V-0104 | AIR-V-0105 | AIR-V-0106 | AIR-V-0107

AIR FILTER
AIR-FLT-0101

S | S

ROTARY LOBE SLUDGE
HOLDING TANK BLOWER
NO. 1
AIR-BL-0101 *

6"-AA-SS-02

AIR-V-0001

6"-AA-SS-02

PD | 71-I-001
TO SLUDGE HOLDING
TANK NO. 1

AIR-V-0003

* PDSH 0201 | PDI 0201 | PG 0201 | TSH 0201 | TG 0201 | TDSH 0201 | PG 0202 | PSH 0202 | PIT 0202

AIR-V-0201 | AIR-V-0202 | AIR-V-0203 | AIR-V-0204 | AIR-V-0205 | AIR-V-0206 | AIR-V-0207

AIR FILTER
AIR-FLT-0201

S | S

ROTARY LOBE SLUDGE
HOLDING TANK BLOWER
NO. 2
AIR-BL-0201 *

6"-AA-SS-02

AIR-V-0002

6"-AA-SS-02

PE | 71-I-001
TO SLUDGE HOLDING
TANK NO. 2

SOUND ENCLOSURE (TYP)

NOTES:
1. SEE LEGEND ON DRAWINGS 00-I-001, 00-I-002 AND 00-I-003.
2. AREA CODE IS 71 UNLESS OTHERWISE NOTED. SYSTEM CODE IS AIR UNLESS OTHERWISE INDICATED.
3. LOCAL CONTROL DEVICES SUCH AS INDICATING LIGHTS AND SWITCHES, LOCATED ON MCC'S OR AT DRIVEN EQUIPMENT, MAY NOT BE SHOWN ON THIS P&ID.

60% SUBMITTAL - NOT FOR CONSTRUCTION

NO.	BY	CHK	APP	DATE	REVISIONS AND RECORD OF USE
B	BLB	TAH	EVB	7/30/2019	60% SUBMITTAL
A	BLB	TAH	EVB	3/5/2019	30% SUBMITTAL

BLACK & VEATCH
JOINT VENTURE
FILANC
BLACK & VEATCH

CITY OF MORRO BAY
MORRO BAY WATER
RECLAMATION FACILITY (WRF)

RESIDUALS AREA - SLUDGE & SAFE SETTLE TANKS
P&ID
SLUDGE HOLDING TANK BLOWERS

DESIGNED: BLB, KEZ
DETAILED: PVR
CHECKED: TAH
APPROVED:
DATE:

0 1/2 1
IF THIS BAR DOES NOT MEASURE 1" THEN DRAWING IS NOT TO FULL SCALE

PROJECT NO.
400530

71-I-003
SHEET
OF

PLOTTED: 30-07-2019 11:11:19
D400530

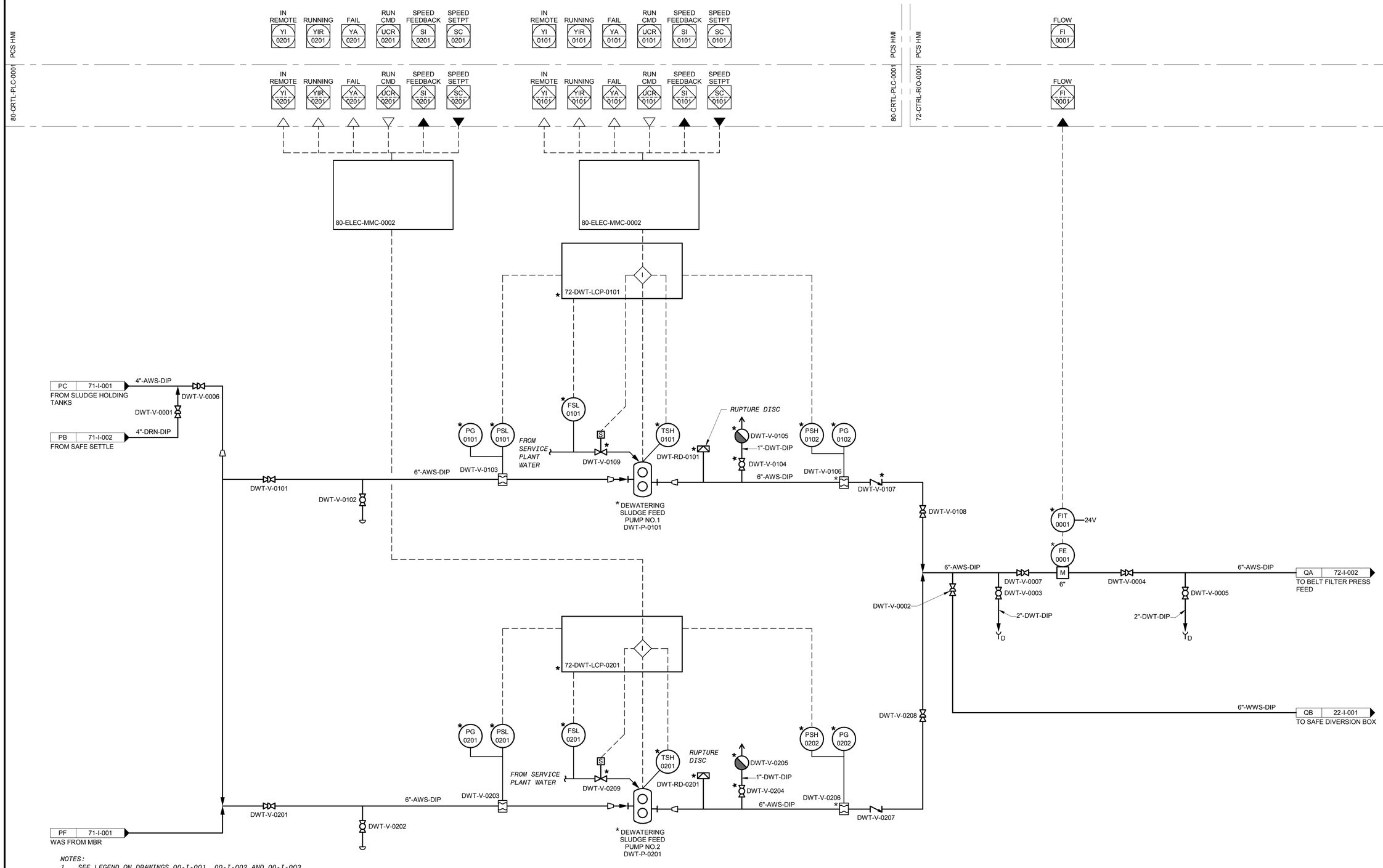

NOTES:
1. SEE LEGEND ON DRAWINGS 00-I-001, 00-I-002 AND 00-I-003.
2. AREA CODE IS 72 UNLESS OTHERWISE NOTED. SYSTEM CODE IS DWT UNLESS OTHERWISE INDICATED.
3. LOCAL CONTROL DEVICES SUCH AS INDICATING LIGHTS AND SWITCHES, LOCATED ON MCC'S OR AT DRIVEN EQUIPMENT, MAY NOT BE SHOWN ON THIS P&ID.

* ITEM FURNISHED BY DEWATERING SYSTEM SUPPLIER

60% SUBMITTAL - NOT FOR CONSTRUCTION

NO.	BY	CHK	APP	DATE	REVISIONS AND RECORD OF USE
B	BLB	TAH	EVB	7/30/2019	60% SUBMITTAL
A	BLB	TAH	EVB	3/5/2019	30% SUBMITTAL

BLACK & VEATCH JOINT VENTURE
FILANC
BLACK & VEATCH

CITY OF MORRO BAY
MORRO BAY WATER RECLAMATION FACILITY (WRF)

RESIDUALS AREA - DEWATERING SYSTEM P&ID
DEWATERING SLUDGE FEED PUMPS

DESIGNED: BLB, KEZ
DETAILED: PVR
CHECKED: TAH
APPROVED:
DATE:

0 1/2 1
IF THIS BAR DOES NOT MEASURE 1" THEN DRAWING IS NOT TO FULL SCALE

PROJECT NO. 400530

72-I-001
SHEET OF

PLOTTED: 30-07-2019 11:11:19
D400530

PCS HMI

72-CTRL-RIO-0001

IN REMOTE YI 0006 | OPENED ZIO 0006 | CLOSED ZIC 0006 | OPEN CMD ZCO 0006 | CLOSE CMD ZCC 0006

LOW PRESSURE PAL 0001 | RUNNING YIR 0001 | FAIL YA 0001 | SHUTDOWN ALARM UA 0001 | ESTOP YIA 0001 | FAIL YA 0001

TYPICAL I/O FOR ALL CONVEYORS

ESTOP YIA 0001 | RUNNING YIR 0001 | ZERO SPEED SI 0001 | MOTOR OVLD IA 0001 | IN REMOTE YI 0001 | RUN CMD UCR 0001

IN REMOTE YI 0101 | OPENED ZIO 0101 | CLOSED ZIC 0101 | OPEN CMD ZCO 0101 | CLOSE CMD ZCC 0101

IN REMOTE YI 0201 | OPENED ZIO 0201 | CLOSED ZIC 0201 | OPEN CMD ZCO 0201 | CLOSE CMD ZCC 0201

SEE TYPICAL I/O AND CONTROLS

HS 0006 | LOR | HS 0006 | OSC | ZLC 0006 | ZLO 0006 | ZSC 0006 | ZSO 0006

VALVE ACTUATOR

480V

HS 0101 | LOR | HS 0101 | OSC | ZLC 0101 | ZLO 0101 | ZSC 0101 | ZSO 0101

VALVE ACTUATOR

480V

HS 0201 | LOR | HS 0201 | OSC | ZLC 0201 | ZLO 0201 | ZSC 0201 | ZSO 0201

VALVE ACTUATOR

480V

72-DWT-LCP-1002
(WITH LOCAL STARTER)

* BELT FILTER PLC PANEL (72-DWT-PLC-0001)
72-DWT-LCP-0001 (WITH LOCAL STARTE/DRIVE)

HS O/O HS ESTOP

* LOCAL OIT PANEL

72-DWT-LCP-1002
(WITH LOCAL STARTER)

72-DWT-LCP-1003
(WITH LOCAL STARTER)

* BELT FILTER PRESS
DWT-JUNCTION BOX-0001

* DWT-HPU-0001

* PSL 0001

PLANT SERVICE WATER — 2"-PRW-PVC-02 — NPW-V-0002 — NPW-V-0001

BELT FILTER PRESS WASHWATER PUMP P-0001

UR | 90-I-008
POLYMER STORAGE — 3"-POLY-PVC-02 — POLF-V-0001 — POLF-V-0002

2"-PRW-PVC-02

M

QA | 72-I-001
FROM DEWATERING SLUDGE FEED PUMPS — 6"-AWS-DIP — DWT-V-0006

DEWATERING SYSTEM SKID

HS 0001 E-STOP

* BELT FILTER PRESS 1
DWT-BFPS-0001

8"-CAKE-DIP

HS 0003 E-STOP

SS 0003

HS 0001 E-STOP

SS 0001

SCREW CONVEYOR
DWT-COS-0001

HS 0002 E-STOP

SS 0002

VERTICAL SHAFTLESS SCREW CONVEYOR
DWT-COS-0002

DWT-V-0101 — DUMPSTER — DWT-V-0201

8"-DRN-DIP

TO PLANT SEWER

NOTES:
1. *SEE LEGEND ON DRAWINGS 00-I-001, 00-I-002 AND 00-I-003.*
2. *AREA CODE IS 72 UNLESS OTHERWISE NOTED. SYSTEM CODE IS DWT UNLESS OTHERWISE INDICATED.*
3. *LOCAL CONTROL DEVICES SUCH AS INDICATING LIGHTS AND SWITCHES, LOCATED ON MCC'S OR AT DRIVEN EQUIPMENT, MAY NOT BE SHOWN ON THIS P&ID.*
4. *BELT FILTER PRESS PACKAGE PLANT I/O MAY VARY BASE ON FINAL VENDOR DESIGN.*

* *ITEM FURNISHED BY DEWATERING SYSTEM SUPPLIER*

60% SUBMITTAL - NOT FOR CONSTRUCTION

NO.	BY	CHK	APP	DATE	REVISIONS AND RECORD OF USE
B	BLB	TAH	EVB	7/30/2019	60% SUBMITTAL
A	BLB	TAH	EVB	3/5/2019	30% SUBMITTAL

BLACK & VEATCH JOINT VENTURE FILANC BLACK & VEATCH

CITY OF MORRO BAY
MORRO BAY WATER RECLAMATION FACILITY (WRF)

RESIDUALS AREA - DEWATERING SYSTEM
P&ID
BELT FILTER PRESS

DESIGNED: BLB, KEZ
DETAILED: PVR
CHECKED: TAH
APPROVED:
DATE:

0 1/2 1
IF THIS BAR DOES NOT MEASURE 1" THEN DRAWING IS NOT TO FULL SCALE

PROJECT NO. 400530

72-I-002
SHEET
OF

PLOTTED: 30-07-2019 11:11:20
D400530

TYPICAL I/O FOR 0001, 0002, 0003, 0004, 0005, 0006, 0011, 0014 VALVE

PCS HMI

72-CTRL-RIO-0001

IN REMOTE YI 0001 | RUNNING YIR 0001 | FAIL YA 0001 | START CMD UCS 0001 | STOP CMD UCS 0001 | LEVEL LI 0001 | HIGH FLOW FAH 0001 | HIGH LEVEL LAH 0001 | VIBRATION VI 0001 | pH AI 0001

IN REMOTE YI 0001 | RUNNING YIR 0001 | FAIL YA 0001 | HI PRESSURE PAH 0003

IN REMOTE YI 0002 | RUNNING YIR 0002 | FAIL YA 0002 | HI PRESSURE PAH 0004

FLOW FI 0001 | PRESSURE PI 0001 | PRESSURE PI 0002 | FLOW FI 0002 | FLOW FI 0003

IN REMOTE YI 0007 | OPENED ZIO 0007 | CLOSED ZIC 0007 | OPEN CMD ZCO 0007 | CLOSE CMD ZCC 0007

CONTROL PANEL (WITH LOCAL STARTER/DRIVE)
73-FSW-LCP-0001 (73-FSW-PLC-0001)

HS 0002 | LOR | HS 0002 | OSC | ZLC 0002 | ZLO 0002 | ZSC 0002 | ZSO 0002 — VALVE ACTUATOR — 480V

HS 0007 | LOR | HS 0007 | OSC | ZLC 0007 | ZLO 0007 | ZSC 0007 | ZSO 0007 — VALVE ACTUATOR — 480V

24V — FIT 0001 — FE 0001

24"-FOW-DIP — M — 14" — 14"-FIW-DIP — 18"-FOW-DIP — RA | 64-I-001 — TO OUTFALL PUMP STATION

EFFLUENT CHAMBER

SCUM BOX — 8"-FSCM-DIP — M — SCUM VALVE — FSW-V-0007 — TO PLANT DRAIN

6"-FSW-DIP — FSW-V-0002

SEE TYPICAL VALVE ACTUATOR AND I/O

LSH 0001

pH — 24V — AIT 0001 — AE 0001

6"-FBW-DIP — FSW-V-0003

SEE TYPICAL VALVE ACTUATOR AND I/O

6"-FBW-DIP — FSW-V-0004

FS 0001

SEE TYPICAL VALVE ACTUATOR AND I/O

6"-FBW-DIP — FSW-V-0005

VIT 0001

* DISK FILTER NO. 1
73-FSW-FLT-0001
FSW

LIT 0001 — LE 0001 — FSW-V-0001

SEE TYPICAL VALVE ACTUATOR AND I/O — RECIRCULATION VALVE — FSW-V-0006 — 6"-FBW-DIP

24"-FIW-DIP — FSW-G-0001

PA | 71-I-002 — FROM SAFE SETTLE — 18"-FIW-DIP — FSW-V-0008 — 6"-FIW-DIP

6"-DRN-DIP — TO PLANT SEWER

6"-FSW-DIP — PIT 0001 — FSW-V-0009 — 4"-FSW-DIP — FILTERS SOLIDS WASTE PUMP FSW-P-0001

PSH 0003 | PG 0003 — 4"-FSW-DIP — FIT 0002 — 24V — FE 0002 — M — 6" — FSW-V-0010 — 6"-FSW-DIP — SEE TYPICAL VALVE ACTUATOR AND I/O — DISCHARGE VALVE — FSW-V-0011

A — B

6"-FBW-DIP — PIT 0002 — FSW-V-0012 — 4"-FBW-DIP — FILTER BACKWASH WASTE PUMP FSW-P-0002

PSH 0004 | PG 0004 — 4"-FBW-DIP — FIT 0003 — 24V — FE 0003 — M — 6" — FSW-V-0012 — 2"-FBW-PVC-02 — FSW-V-0013 — TO PLANT DRAIN

SEE TYPICAL VALVE ACTUATOR AND I/O — DISCHARGE VALVE — 6"-FBW-DIP — FSW-V-0014 — RB | 71-I-001 — TO SLUDGE HOLDING TANK

NOTES:

1. SEE LEGEND AND ABBREVIATIONS ON DRAWINGS 00-I-001, 00-I-002 AND 00-I-003.
2. AREA CODE IS 73 UNLESS OTHERWISE NOTED. SYSTEM CODE IS FSW UNLESS OTHERWISE NOTED.
3. LOCAL CONTROL DEVICES SUCH AS INDICATING LIGHTS AND SWITCHES, LOCATED ON MCCs OR AT DRIVEN EQUIPMENT, MAY NOT BE SHOWN ON THIS P&ID.

* ITEM SUPPLYED BY SAFE FILTER SUPPLIER

60% SUBMITTAL - NOT FOR CONSTRUCTION

NO.	BY	CHK	APP	DATE	REVISIONS AND RECORD OF USE
B	BLB	TAH	EVB	7/30/2019	60% SUBMITTAL
A	BLB	TAH	EVB	3/5/2019	30% SUBMITTAL

BLACK & VEATCH JOINT VENTURE — BLACK & VEATCH — FILANC

CITY OF MORRO BAY
MORRO BAY WATER RECLAMATION FACILITY (WRF)

RESIDUALS AREA - SAFE FILTER SYSTEM
P&ID
SAFE SYSTEM

DESIGNED: BLB, KEZ
DETAILED: PVR
CHECKED: TAH
APPROVED:
DATE:

0 1/2 1
IF THIS BAR DOES NOT MEASURE 1" THEN DRAWING IS NOT TO FULL SCALE

PROJECT NO. 400530

73-I-001
SHEET
OF

PLOTTED: 30-07-2019 11:11:20
D400530

PCS HMI

80-CTRL-PLC-0001

HI-HI LEVEL LAHH 0001 | LO-LO LEVEL LALL 0001 | LEAK DETECTED MAH 0002 | ATS FAIL YA 0002 | GEN. POWER YI 0002 | NORMAL POWER UA 0002

PCS HMI

80-CTRL-PLC-0001

HI-HI LEVEL LAHH 0001 | LO-LO LEVEL LALL 0001 | LEAK DETECTED MAH 0002 | ATS FAIL YA 0002 | GEN. POWER YI 0002 | NORMAL POWER UA 0002

ENGINE GENERATOR LOCAL CONTROL PANEL 80-GEN-LCP-0001

120Vac

80-ELECT-ATS-0001

BATTERY CHARGER

ENGINE GENERATOR GEN-EG-1

FUE-V-0003

FILTER SEPARATOR

FUEL OIL COOLER (IF REQUIRED)

DAY TANK LOCAL CONTROL PANEL

LI 0001

1"-GEN-DF

LEVEL GAUGE

1"-GEN-DF

INSPECTION POINT

TEE WITH CAP

LSHH 0001

LSH 0001

FUE-T-0001

LSL 0001

LSLL 0001

SIPHON TYPE TANK DRAIN WITH CAP

LS 0002

RUPTURE BASIN DRAIN WITH CAP

FUE-V-0001

FUE-V-0002

SUB-BASE TANK

RUPTURE BASIN

NOTES:

1. SEE LEGEND AND ABBREVIATIONS ON DRAWING 00-I-001, 00-I-002 AND 00-I-003.
2. AREA CODE IS 81 UNLESS OTHERWISE NOTED. SYSTEM CODE IS FUE UNLESS OTHERWISE NOTED.
3. LOCAL CONTROL DEVICES SUCH AS INDICATING LIGHTS AND SWITCHES, LOCATED IN MCC's OR AT DRIVEN EQUIPMENT MAY NOT INDICATED ON THIS P&ID.

60% SUBMITTAL -NOT FOR CONSTRUCTION

NO.	BY	CHK	APP
A	BLB	TAH	EVB

60% SUBMITTAL

REVISIONS AND RECORD OF USE

DATE: 7/30/2019

JOINT VENTURE

FILANC

BLACK & VEATCH

CITY OF MORRO BAY
FILANC BLACK & VEATCH DB PROPOSAL
RECLAMATION FACILITY (WRF)

MISCELLANEOUS - GENERATOR
P&ID
GENERATOR SYSTEM

DESIGNED: BLB
DETAILED: PVR
CHECKED: TAH
APPROVED:
DATE:

0 1/2 1

IF THIS BAR DOES NOT MEASURE 1" THEN DRAWING IS NOT TO FULL SCALE

PROJECT NO. 400530

81-I-001

SHEET OF

PLOTTED: 30-07-2019 15:10:39

D400530

PCS HMI

90-CTRL-RIO-001

LEVEL LI 0001

SPEED FEEDBACK SI 0101 | SPEED SETPT SC 0101 | RUNNING YIR 0101 | FAIL YA 0101 | IN REMOTE YI 0101 | RUN CMD UCR 0101 | HI PRESSURE PAH 0101

SPEED FEEDBACK SI 0201 | SPEED SETPT SC 0201 | RUNNING YIR 0201 | FAIL YA 0201 | IN REMOTE YI 0201 | RUN CMD UCR 0201 | HI PRESSURE PAH 0201

SPEED FEEDBACK SI 0301 | SPEED SETPT SC 0301 | RUNNING YIR 0301 | FAIL YA 0301 | IN REMOTE YI 0301 | RUN CMD UCR 0301 | HI PRESSURE PAH 0301

EYEWASH FLOW FAH 0001

SODIUM HYPOCHLORITE UNLOADING PANEL

90-NOCL-LCP-0101 (INTEGRAL TO PUMP)

90-NOCL-LCP-0201 (INTEGRAL TO PUMP)

90-NOCL-LCP-0301 (INTEGRAL TO PUMP)

120VAC

FROM WATER SUPPLY

FSH 0001

90-NOCL-CHEM-0001

LIT 0001 — 24V

LE 0001 — US

2"-NACL-CPVC-02

NOCL-V-0002

SODIUM HYPOCHLORITE STORAGE TANK NOCL-T-0001

LG 0001

3"-NACL-CPVC-02

NOCL-V-0001

NOCL-V-0003

NOCL-V-0004

NOCL-V-0005

NOCL-V-0006

2"-NACL-CPVC-02

NOCL-V-0007

1"-NACL-CPVC-02

PG 0102

NOCL-V-0104

NOCL-V-0105

NOCL-V-0103

PG 0101

PSH 0101

MSH 0101

NOCL-V-0102

NOCL-V-0101

SODIUM HYPOCHLORITE METERING PUMP NO. 1 NOCL-P-0101

PG 0202

NOCL-V-0204

NOCL-V-0205

NOCL-V-0203

PG 0201

PSH 0201

MSH 0201

NOCL-V-0202

NOCL-V-0201

SODIUM HYPOCHLORITE METERING PUMP NO. 2 NOCL-P-0201

PG 0302

NOCL-V-0304

NOCL-V-0305

NOCL-V-0303

PG 0301

PSH 0301

MSH 0301

NOCL-V-0302

NOCL-V-0301

SODIUM HYPOCHLORITE METERING PUMP NO. 3 NOCL-P-0301

1/2"-NACL-TEFL-01 — UA 64-I-001 — TO OCEAN OUTFALL PIPING

1/2"-NACL-TEFL-01 — UB 65-I-001 — TO RO CONCENTRATE WATER PIPING

1/2"-NACL-TEFL-01 — UC 51-I-001 — TO RO FEED PIPING

PLANT PIPING | YARD PIPING

2"-NACL-CPVC-02 — UD 90-I-002 — TO METERING PUMPS

NOTES:

1. SEE LEGEND AND ABBREVIATIONS ON DRAWING 00-I-001, 00-I-002 AND 00-I-003.
2. AREA CODE IS 90 UNLESS OTHERWISE NOTED. SYSTEM CODE IS NOCL UNLESS OTHERWISE NOTED.
3. LOCAL CONTROL DEVICES SUCH AS INDICATING LIGHTS AND SWITCHES, LOCATED IN MCC's OR AT DRIVEN EQUIPMENT MAY NOT INDICATED ON THIS P&ID.

60% SUBMITTAL - NOT FOR CONSTRUCTION

NO.	BY	CHK	APP	DATE	REVISIONS AND RECORD OF USE
B	BLB	TAH	EVB	7/30/2019	60% SUBMITTAL
A	BLB	TAH	EVB	3/5/2019	30% SUBMITTAL

BLACK & VEATCH JOINT VENTURE

BLACK & VEATCH FILANC

CITY OF MORRO BAY
MORRO BAY WATER RECLAMATION FACILITY (WRF)

CHEMICALS - CHEMICAL FACILITY P&ID

SODIUM HYPOCHLORITE STORAGE & FEED 1

DESIGNED: BLB, ADV
DETAILED: PVR
CHECKED: TAH
APPROVED:
DATE:

0 1/2 1
IF THIS BAR DOES NOT MEASURE 1" THEN DRAWING IS NOT TO FULL SCALE

PROJECT NO. 400530

90-I-001
SHEET OF

PLOTTED: 30-07-2019 15:23:57
D400530

PCS HMI

90-CTRL-RIO-001

LEAK DETECTED | SPEED FEEDBACK | SPEED SETPT | RUNNING | FAIL | IN REMOTE | RUN CMD | HI PRESSURE

MAH 0401 | SI 0401 | SC 0401 | YIR 0401 | YA 0401 | YI 0401 | UCR 0401 | PAH 0401

SI 0501 | SC 0501 | YIR 0501 | YA 0501 | YI 0501 | UCR 0501 | PAH 0501

SI 0601 | SC 0601 | YIR 0601 | YA 0601 | YI 0601 | UCR 0601 | PAH 0601

SI 0701 | SC 0701 | YIR 0701 | YA 0701 | YI 0701 | UCR 0701 | PAH 0701 | MAH 0701

LEAK DETECTED TYPICAL FOR PUMPS NO. 5 AND NO. 6

90-NOCL-LCP-0401 (INTEGRAL TO PUMP)

90-NOCL-LCP-0501 (INTEGRAL TO PUMP)

90-NOCL-LCP-0601 (INTEGRAL TO PUMP)

90-NOCL-LCP-0701 (INTEGRAL TO PUMP)

UD | 90-I-001
FROM SODIUM HYPOCHLORITE STORAGE TANK

2"-NACL-CPVC-02

1"-NACL-CPVC-02

PG 0402 | PG 0502 | PG 0602 | PG 0702

NOCL-V-0404 | NOCL-V-0405 | NOCL-V-0403 | PG 0401 | PSH 0401 | MSH 0401 | NOCL-V-0402 | NOCL-V-0401

NOCL-V-0504 | NOCL-V-0505 | NOCL-V-0503 | PG 0501 | PSH 0501 | MSH 0501 | NOCL-V-0502 | NOCL-V-0501

NOCL-V-0604 | NOCL-V-0605 | NOCL-V-0603 | PG 0601 | PSH 0601 | MSH 0601 | NOCL-V-0602 | NOCL-V-0601

NOCL-V-0704 | NOCL-V-0705 | NOCL-V-0703 | PG 0701 | PSH 0701 | MSH 0701 | NOCL-V-0702 | NOCL-V-0701

SODIUM HYPOCHLORITE METERING PUMP NO. 4 NOCL-P-0401

SODIUM HYPOCHLORITE METERING PUMP NO. 5 NOCL-P-0501

SODIUM HYPOCHLORITE METERING PUMP NO. 6 NOCL-P-0601

SODIUM HYPOCHLORITE METERING PUMP NO. 7 NOCL-P-0701

1/2"-NACL-TEFL-01 | PLANT PIPING | YARD PIPING | UE | 52-I-001 | TO UVAOP SYSTEM

1/2"-NACL-TEFL-01 | PLANT PIPING | YARD PIPING | UF | 62-I-001 | DISINFECTION OF RO PRODUCT WATER

3/4"-NACL-TEFL-01 | PLANT PIPING | YARD PIPING | UG | 32-I-001 | TO MBR BACKWASH / CIP

1/2"-NACL-TEFL-01 | PLANT PIPING | YARD PIPING | UH | 34-I-001 | TO ONSITE RECYCLED WATER PUMPS

NOTES:

1. SEE LEGEND AND ABBREVIATIONS ON DRAWING 00-I-001, 00-I-002 AND 00-I-003.
2. AREA CODE IS 90 UNLESS OTHERWISE NOTED. SYSTEM CODE IS NOCL UNLESS OTHERWISE NOTED.
3. LOCAL CONTROL DEVICES SUCH AS INDICATING LIGHTS AND SWITCHES, LOCATED IN MCC's OR AT DRIVEN EQUIPMENT MAY NOT INDICATED ON THIS P&ID.

60% SUBMITTAL - NOT FOR CONSTRUCTION

NO.	BY	CHK	APP	DATE	REVISIONS AND RECORD OF USE
B	BLB	TAH	EVB	7/30/2019	60% SUBMITTAL
A	BLB	TAH	EVB	3/5/2019	30% SUBMITTAL

BLACK & VEATCH

JOINT VENTURE

FILANC

BLACK & VEATCH

CITY OF MORRO BAY
MORRO BAY WATER RECLAMATION FACILITY (WRF)

CHEMICALS - CHEMICAL FACILITY P&ID

SODIUM HYPOCHLORITE STORAGE & FEED 2

DESIGNED: BLB, ADV
DETAILED: PVR
CHECKED: TAH
APPROVED:
DATE:

0 1/2 1
IF THIS BAR DOES NOT MEASURE 1" THEN DRAWING IS NOT TO FULL SCALE

PROJECT NO. 400530

90-I-002
SHEET OF

PLOTTED: 30-07-2019 15:23:58
D400530

PCS HMI

90-CTRL-RIO-0001

EYEWASH FLOW FAH 0001

LEVEL LI 0001 | SPEED FEEDBACK SI 0101 | SPEED SETPT SC 0101 | RUNNING YIR 0101 | FAIL YA 0101 | IN REMOTE YI 0101 | RUN CMD UCR 0101 | HI PRESSURE PAH 0101

SPEED FEEDBACK SI 0201 | SPEED SETPT SC 0201 | RUNNING YIR 0201 | FAIL YA 0201 | IN REMOTE YI 0201 | RUN CMD UCR 0201 | HI PRESSURE PAH 0201

SPEED FEEDBACK SI 0301 | SPEED SETPT SC 0301 | RUNNING YIR 0301 | FAIL YA 0301 | IN REMOTE YI 0301 | RUN CMD UCR 0301 | HI PRESSURE PAH 0301 | LEAK DETECTED MAH 0301

LEAD DETECTED FOR PUMPS NO. 1 AND NO. 2

120VAC

FROM WATER SUPPLY

FSH 0001

90-NAOH-CHEM-0001

SODIUM HYPOCHLORITE UNLOADING PANEL

90-NAOH-LCP-0101 (INTEGRAL TO PUMP)

90-NAOH-LCP-0201 (INTEGRAL TO PUMP)

90-NAOH-LCP-0301 (INTEGRAL TO PUMP)

LIT 0001 — 24V

LE 0001 — US

2"-NAOH-CS-02

SODIUM HYDROXIDE STORAGE TANK NAOHT-0001

LG 0001

3"-NAOH-CS-03

NAOH-V-0001

NAOH-V-0002

NAOH-V-0003

NAOH-V-0004

NAOH-V-0006

NAOH-V-0007

2"-NAOH-CS-02

1"-NAOH-CS-02

1/2"-NAOH-CS-02

PG 0102

PG 0202

PG 0302

NAOH-V-0104

NAOH-V-0105

NAOH-V-0103

NAOH-V-0204

NAOH-V-0205

NAOH-V-0203

NAOH-V-0304

NAOH-V-0305

NAOH-V-0303

PG 0101

PG 0201

PG 0301

PSH 0101

PSH 0201

PSH 0301

MSH 0101

MSH 0201

MSH 0301

NAOH-V-0102

NAOH-V-0202

NAOH-V-0302

NAOH-V-0101

NAOH-V-0201

NAOH-V-0301

SODIUM HYDROXIDE METERING PUMP NO. 1 NAOH-P-0101

SODIUM HYDROXIDE METERING PUMP NO. 2 NAOH-P-0201

SODIUM HYDROXIDE METERING PUMP NO. 3 NAOH-P-0301

3/4"-NAOH-PE-06 — PLANT PIPING | YARD PIPING — UI 51-I-009 TO RO CIP/NEUTRALIZATION TANK

1/2"-NAOH-PE-06 — PLANT PIPING | YARD PIPING — UJ 62-I-001 TO PRODUCT WATER TANK

1/2"-NAOH-PE-06 — PLANT PIPING | YARD PIPING — UK 22-I-001 SODIUM HYDROXIDE TO FINE SCREEN EFFLUENT

NOTES:

1. SEE LEGEND AND ABBREVIATIONS ON DRAWING 00-I-001, 00-I-002 AND 00-I-003.
2. AREA CODE IS 90 UNLESS OTHERWISE NOTED. SYSTEM CODE IS NAOH UNLESS OTHERWISE NOTED.
3. LOCAL CONTROL DEVICES SUCH AS INDICATING LIGHTS AND SWITCHES, LOCATED IN MCC'S OR AT DRIVEN EQUIPMENT MAY NOT INDICATED ON THIS P&ID.

60% SUBMITTAL - NOT FOR CONSTRUCTION

NO.	BY	CHK	APP	DATE	REVISIONS AND RECORD OF USE
B	BLB	TAH	EVB	7/30/2019	60% SUBMITTAL
A	BLB	TAH	EVB	3/5/2019	30% SUBMITTAL

BLACK & VEATCH

JOINT VENTURE

FILANC

BLACK & VEATCH

CITY OF MORRO BAY
MORRO BAY WATER
RECLAMATION FACILITY (WRF)

CHEMICALS - CHEMICAL FACILITY
P&ID
SODIUM HYDROXIDE STORAGE & FEED

DESIGNED: BLB, ADV
DETAILED: PVR
CHECKED: TAH
APPROVED:
DATE:

0 1/2 1
IF THIS BAR DOES NOT MEASURE 1" THEN DRAWING IS NOT TO FULL SCALE

PROJECT NO. 400530

90-I-003
SHEET OF

PLOTTED: 30-07-2019 15:23:59
D400530

PCS HMI

90-CTRL-RIO-0001

WEIGHT WI 0035

SPEED FEEDBACK SI 0001 | SPEED SETPT SC 0001 | RUNNING YIR 0001 | FAIL YA 0001 | IN REMOTE YI 0001 | RUN CMD UCR 0001 | HI PRESSURE PAH 0001 | LEAK DETECTED MAH 0001

EYEWASH FLOW FAH 0002

120VAC

FROM WATER SUPPLY

FSH 0002

90-CHEM-EEW-0002

90-NHS-LCP-0001
(INTEGRAL TO PUMP)

SODIUM BISULFITE SWITCHOVER TANK (NOTE 4)

1"-NHS-CPVC-02

NHS-V-0002

1/2"-NHS-PE-06

PLANT PIPING | YARD PIPING

UL | 65-I-001
DECHLORINATION TO OCEAN OUTFALL PIPING

1"-NHS-CPVC-02

PG 0002

NHS-V-0007

NHS-V-0008

NHS-V-0006

PG 0001

PSH 0001

MSH 0001

NHS-V-0005

NHS-V-0004

SODIUM BISULFITE STORAGE TOTE

24V

WIT 0035

WE 0035

NHS-V-0001

1"-NHS-CPVC-02

NHS-V-0003

SODIUM BISULFITE METERING PUMP NHS-P-0001

SODIUM BISULFITE SECONDARY CONTAINMENT WITH INTEGRAL SCALE

NOTES:

1. SEE LEGEND AND ABBREVIATIONS ON DRAWING 00-I-001, 00-I-002 AND 00-I-003.
2. AREA CODE IS 90 UNLESS OTHERWISE NOTED. SYSTEM CODE IS NHS UNLESS OTHERWISE NOTED.
3. LOCAL CONTROL DEVICES SUCH AS INDICATING LIGHTS AND SWITCHES, LOCATED ON MCC'S OR AT DRIVEN EQUIPMENT, MAY NOT BE SHOWN ON THIS P&ID.
4. SWITCHOVER TANK PROVIDED IN THE EVENT THE TOTE NEEDS TO BE CHANGED OUT AND NHS FEED CANNOT BE STOPPED. THIS TANK CAN BE MANUALLY FILLED VIA GRAVITY FROM THE TOTE AND SHOULD BE DRAINED COMPLETELY BEFORE SWITCHING BACK TO THE NEW TOTE.

60% SUBMITTAL - NOT FOR CONSTRUCTION

NO.	BY	CHK	APP	DATE	REVISIONS AND RECORD OF USE
B	BLB	TAH	EVB	7/30/2019	60% SUBMITTAL
A	BLB	TAH	EVB	3/5/2019	30% SUBMITTAL

BLACK & VEATCH JOINT VENTURE

BLACK & VEATCH

FILANC

CITY OF MORRO BAY
MORRO BAY WATER RECLAMATION FACILITY (WRF)

CHEMICALS - CHEMICAL FACILITY P&ID

SODIUM BISULFITE STORAGE & FEED

DESIGNED: BLB, ADV
DETAILED: PVR
CHECKED: TAH
APPROVED:
DATE:

0 1/2 1
IF THIS BAR DOES NOT MEASURE 1" THEN DRAWING IS NOT TO FULL SCALE

PROJECT NO. 400530

90-I-004
SHEET
OF

PLOTTED: 30-07-2019 15:24:00
D400530

PCS HMI

90-CTRL-RIO-0001

WEIGHT WI 0001

SPEED FEEDBACK SI 0001 | SPEED SETPT SC 0001 | RUNNING YIR 0001 | FAIL YA 0001 | IN REMOTE YI 0001 | RUN CMD UCR 0001 | HI PRESSURE PAH 0001 | LEAK DETECTED MAH 0001

EYEWASH FLOW FAH 0003

PCS HMI

90-CTRL-RIO-0001

WEIGHT WI 0001

SPEED FEEDBACK SI 0001 | SPEED SETPT SC 0001 | RUNNING YIR 0001 | FAIL YA 0001 | IN REMOTE YI 0001 | RUN CMD UCR 0001 | HI PRESSURE PAH 0001 | LEAK DETECTED MAH 0001

EYEWASH FLOW FAH 0003

120VAC

FROM WATER SUPPLY

FSH 0003

90-CHEM-EEW-0003

90-ANIT-LCP-0001
(INTEGRAL TO PUMP)

1/2"-ANTI-PE-06

PLANT PIPING | YARD PIPING

UM | 51-I-001
ANTISCALANT TO COMMON RO HEADER

1"-ANTI-PVC-02

PG 0002

ANTI-V-0006

ANTI-V-0007

ANTI-V-0005

PG 0001

PSH 0001

MSH 0001

ANTI-V-0004

ANTI-V-0003

ANTISCALANT STORAGE TOTE

24V

WIT 0001

WE 0001

1"-ANTI-CPVC-02

ANTI-V-0001

ANTI-V-0002

ANTISCALANT METERING PUMP
ANTI-P-0001

ANTISCALANT SECONDARY CONTAINMENT WITH INTEGRAL SCALE

NOTES:

1. SEE LEGEND AND ABBREVIATIONS ON DRAWING 00-I-001, 00-I-002 AND 00-I-003.
2. AREA CODE IS 90 UNLESS OTHERWISE NOTED. SYSTEM CODE IS ANTI UNLESS OTHERWISE NOTED.
3. LOCAL CONTROL DEVICES SUCH AS INDICATING LIGHTS AND SWITCHES, LOCATED ON MCC's OR AT DRIVEN EQUIPMENT, MAY NOT BE SHOWN ON THIS P&ID.

60% SUBMITTAL - NOT FOR CONSTRUCTION

NO.	BY	CHK	APP	DATE	REVISIONS AND RECORD OF USE
B	BLB	TAH	EVB	7/30/2019	60% SUBMITTAL
A	BLB	TAH	EVB	3/5/2019	30% SUBMITTAL

BLACK & VEATCH JOINT VENTURE

BLACK & VEATCH

FILANC

CITY OF MORRO BAY
MORRO BAY WATER
RECLAMATION FACILITY (WRF)

CHEMICALS - CHEMICAL FACILITY
P&ID
ANTISCALANT STORAGE & FEED

DESIGNED: BLB, ADV
DETAILED: PVR
CHECKED: TAH
APPROVED:
DATE:

0 1/2 1
IF THIS BAR DOES NOT MEASURE 1" THEN DRAWING IS NOT TO FULL SCALE

PROJECT NO.
400530

90-I-005
SHEET
OF

PLOTTED: 30-07-2019 15:24:00
D400530

PCS HMI

90-CTRL-RIO-0001

WEIGHT WI 0001

SPEED FEEDBACK SI 0101 | SPEED SETPT SC 0101 | RUNNING YIR 0101 | FAIL YA 0101 | IN REMOTE YI 0101 | RUN CMD UCR 0101 | HI PRESSURE PAH 0101 | LEAK DETECTED MAH 0101

SPEED FEEDBACK SI 0201 | SPEED SETPT SC 0201 | RUNNING YIR 0201 | FAIL YA 0201 | IN REMOTE YI 0201 | RUN CMD UCR 0201 | HI PRESSURE PAH 0201 | LEAK DETECTED MAH 0201

EYEWASH FLOW FAH 0004

120VAC

FROM WATER SUPPLY

FSH 0004

90-CHEM-EEW-0004

90-CA-LCP-0101
(INTEGRAL TO PUMP)

90-CA-LCP-0201
(INTEGRAL TO PUMP)

1/2"-CA-PE-06

PLANT PIPING | YARD PIPING

UN 51-I-009
TRANSFER TO RO CIP SYSTEM

1/2"-CA-PE-06

PLANT PIPING | YARD PIPING

UO 32-I-001
TRANSFER TO MBR MAINTENANCE CLEAN

1"-CA-PVC-02

PG 0102

CA-V-0104

CA-V-0105

CA-V-0103

PG 0101

PSH 0101

MSH 0101

1"-CA-PVC-02

CA-V-0102

CA-V-0101

1"-CA-PVC-02

PG 0202

CA-V-0204

CA-V-0205

CA-V-0203

PG 0201

PSH 0201

MSH 0201

1"-CA-PVC-02

CA-V-0202

CA-V-0201

2"-CA-PVC-02

2"-CA-PVC-02

CA-V-0001

CA-V-0002

CITRIC ACID STORAGE TOTE

24V — WIT 0001

WE 0001

CITRIC ACID SECONDARY CONTAINMENT WITH INTEGRAL SCALE

NOTES:

1. SEE LEGEND AND ABBREVIATIONS ON DRAWING 00-I-001, 00-I-002 AND 00-I-003.
2. AREA CODE IS 90 UNLESS OTHERWISE NOTED. SYSTEM CODE IS CA UNLESS OTHERWISE NOTED.
3. LOCAL CONTROL DEVICES SUCH AS INDICATING LIGHTS AND SWITCHES, LOCATED ON MCC's OR AT DRIVEN EQUIPMENT, MAY NOT BE SHOWN ON THIS P&ID.

60% SUBMITTAL - NOT FOR CONSTRUCTION

NO.	BY	CHK	APP	DATE	REVISIONS AND RECORD OF USE
B	BLB	TAH	EVB	7/30/2019	60% SUBMITTAL
A	BLB	TAH	EVB	3/5/2019	30% SUBMITTAL

BLACK & VEATCH
JOINT VENTURE
FILANC
BLACK & VEATCH

CITY OF MORRO BAY
MORRO BAY WATER RECLAMATION FACILITY (WRF)

CHEMICALS - CHEMICAL FACILITY
P&ID
CITRIC ACID STORAGE & FEED

DESIGNED: BLB, ADV
DETAILED: PVR
CHECKED: TAH
APPROVED:
DATE:

0 1/2 1
IF THIS BAR DOES NOT MEASURE 1" THEN DRAWING IS NOT TO FULL SCALE

PROJECT NO. 400530

90-I-006
SHEET OF

PLOTTED: 30-07-2019 15:24:01
D400530

PCS HMI

WEIGHT WI 0001 | IN REMOTE YI 0001 | OPENED ZIO 0001 | CLOSED ZIC 0001 | OPEN CMD ZCO 0001 | CLOSE CMD ZCC 0001 | TEMP TI 0001 | COND AI 0001 | TEMP TI 0002 | COND AI 0002 | HI PRESSURE PAH 0101 | LEAK DETECTED MAH 0101 | FAIL YA 0101 | IN REMOTE YI 0101 | RUNNING YIR 0101 | RUN CMD UCR 0101 | STOP CMD UCS 0101 | STROKE LENGTH NI 0101 | STROKE CMD NC 0101 | SPEED FEEDBACK SI 0101 | SPEED SETPT SC 0101 | HI PRESSURE PAH 0201 | LEAK DETECTED MAH 0201 | FAIL YA 0201 | IN REMOTE YI 0201 | RUNNING YIR 0201 | RUN CMD UCR 0201 | STOP CMD UCS 0201 | STROKE LENGTH NI 0201 | STROKE CMD NC 0201 | SPEED FEEDBACK SI 0201 | SPEED SETPT SC 0201 | EYEWASH FLOW FAH 0005

TYPICAL FOR NPW-V-0002, NPW-V-0003, NPW-V-0004

90-CTRL-RIO-0001

WEIGHT WI 0001 | IN REMOTE YI 0001 | OPENED ZIO 0001 | CLOSED ZIC 0001 | OPEN CMD ZCO 0001 | CLOSE CMD ZCC 0001 | TEMP TI 0001 | COND AI 0001 | TEMP TI 0002 | COND AI 0002 | HI PRESSURE PAH 0101 | LEAK DETECTED MAH 0101 | FAIL YA 0101 | IN REMOTE YI 0101 | RUNNING YIR 0101 | RUN CMD UCR 0101 | STOP CMD UCS 0101 | STROKE LENGTH NI 0101 | STROKE CMD NC 0101 | SPEED FEEDBACK SI 0101 | SPEED SETPT SC 0101 | HI PRESSURE PAH 0201 | LEAK DETECTED MAH 0201 | FAIL YA 0201 | IN REMOTE YI 0201 | RUNNING YIR 0201 | RUN CMD UCR 0201 | STOP CMD UCS 0201 | STROKE LENGTH NI 0201 | STROKE CMD NC 0201 | SPEED FEEDBACK SI 0201 | SPEED SETPT SC 0201 | EYEWASH FLOW FAH 0005

90-CTRL-RIO-0001

FROM PLAN WATER SUPPLY

2"-NPW-PVC-02

FI 0001

FI 0002

TO PLC

NPW-V-0001

NPW-V-0003

TIT 0001 | AIT 0001 COND | TE 0001 | AE 0001 COND

TIT 0002 | AIT 0002 COND | TE 0002 | AE 0002 COND

SULFURIC ACID DILUTION PANEL P-HSO4-PNL-0001

TO PLC

NPW-V-0002

NPW-V-0004

1/2"-SA-CRP-01

HSO4-V-0208 | NHS-V-0207

HSO4-V-0108 | NHS-V-0107

1"-SA-CS-12
NOTE 4

1"-SA-CS-12
NOTE 4

120VAC

FROM WATER SUPPLY

FSH 0005

90-CHEM-EEW-0005

PLANT PIPING | YARD PIPING

1/2"-SA-TEFL-01

UP 51-I-001
TO RO FEED TANK OUTLET PIPING

UQ 52-I-001
TO UV / AOP SYSTEM

OOR: HS, MAH, PAH | RUN: SIC, YL, YA | I

90-HSO4-LCP-0101
(INTEGRAL TO PUMP)

90-HSO4-LCP-0201
(INTEGRAL TO PUMP)

PSH 0101 | PG 0101 | PG 0102 | 1"-SA-CRP-01 | HSO4-V-0106

PSH 0201 | PG 0201 | PG 0202 | 1"-SA-CRP-01 | HSO4-V-0206

NHS-V-0105 | NHS-V-0205

HSO 4 P-0101 | HSO 4 P-0201

HSO4-V-0104 | HSO4-V-0204

MSH 0101 | MSH 0201

HSO4-V-0103 | HSO4-V-0203

1/2"-SA-CRP-01

HSO4-V-0102 | HSO4-V-0202

HSO4-V-0101 | HSO4-V-0201

1"-SA-CRP-01

SULFURIC ACID STORAGE TOTE

24V — WIT 0001 — WE 0001

Q | HSO4-V-0001

HSO4-V-0002

SULFURIC ACID SECONDARY CONTAINMENT WITH INTEGRAL SCALE

NOTES:

1. SEE LEGEND AND ABBREVIATIONS ON DRAWINGS 00-I-001, 00-I-002 AND 00-I-003.
2. AREA CODE IS 90 UNLESS OTHERWISE NOTED. SYSTEM CODE IS HSO4 UNLESS OTHERWISE NOTED.
3. LOCAL CONTROL DEVICES SUCH AS INDICATING LIGHTS AND SWITCHES, LOCATED ON MCC's OR AT DRIVEN EQUIPMENT, MAY NOT BE SHOWN ON THIS P&ID.
4. PIPING DOWNSTREAM OF DILUTION PANEL TO BE TEFLON LINED STEEL MINIMUM LENGTH 15 FT DUE TO HEAT GENERATION DURING DILUTION PROCESS.

60% SUBMITTAL - NOT FOR CONSTRUCTION

NO.	BY	CHK	APP	DATE	REVISIONS AND RECORD OF USE
B	BLB	TAH	EVB	7/30/2019	60% SUBMITTAL
A	BLB	TAH	EVB	3/5/2019	30% SUBMITTAL

BLACK & VEATCH

JOINT VENTURE

FILANC

BLACK & VEATCH

CITY OF MORRO BAY
MORRO BAY WATER
RECLAMATION FACILITY (WRF)

CHEMICALS - CHEMICAL FACILITY
P&ID
SULFURIC ACID STORAGE & FEED

DESIGNED: BLB, ADV
DETAILED: PVR
CHECKED: TAH
APPROVED:
DATE:

0 1/2 1
IF THIS BAR DOES NOT MEASURE 1" THEN DRAWING IS NOT TO FULL SCALE

PROJECT NO. 400530

90-I-007
SHEET OF

PLOTTED: 30-07-2019 15:24:01
D400530

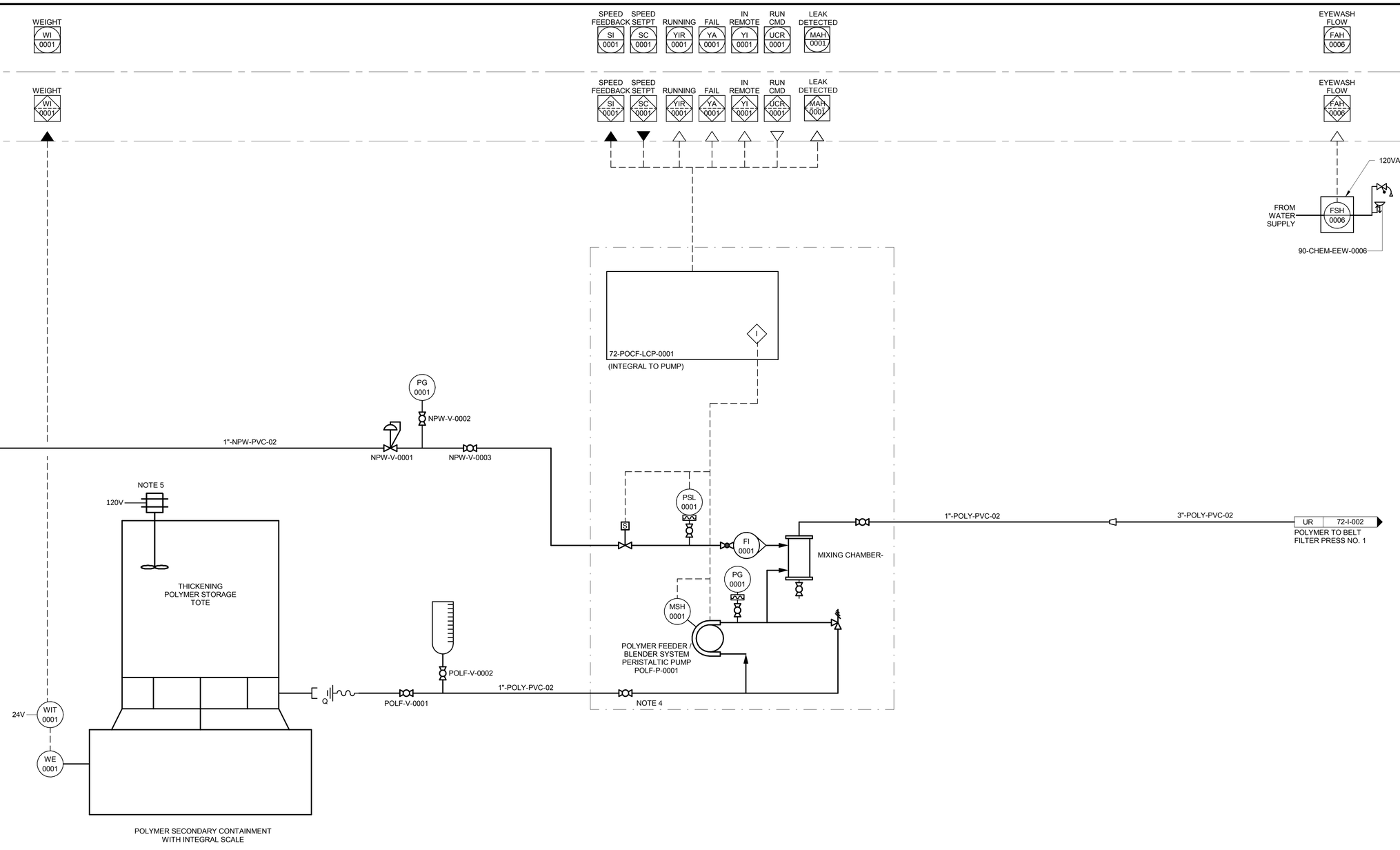

NOTES:

1. SEE LEGEND AND ABBREVIATIONS ON DRAWING 00-I-001, 00-I-002 AND 00-I-003.
2. AREA CODE IS 90 UNLESS OTHERWISE NOTED. SYSTEM CODE IS POLF UNLESS OTHERWISE NOTED.
3. LOCAL CONTROL DEVICES SUCH AS INDICATING LIGHTS AND SWITCHES, LOCATED IN MCC's OR AT DRIVEN EQUIPMENT MAY NOT INDICATED ON THIS P&ID.
4. DETAILS OF FEEDER / BLENDER SKID TO BE CONFIRMED WITH SELECTED VENDOR EQUIPMENT.
5. MIXER TO BE POWERED FROM LOCAL WALL RECEPTICLE. REFER TO POLYMER SYSTEM SPECIFICATION FOR ADDITIONAL INFORMATION.

60% SUBMITTAL - NOT FOR CONSTRUCTION

NO.	BY	CHK	APP	DATE	REVISIONS AND RECORD OF USE
B	BLB	TAH	EVB	7/30/2019	60% SUBMITTAL
A	BLB	TAH	EVB	3/5/2019	30% SUBMITTAL

BLACK & VEATCH JOINT VENTURE

BLACK & VEATCH

FILANC

CITY OF MORRO BAY
MORRO BAY WATER RECLAMATION FACILITY (WRF)

CHEMICALS - DEWATERING AREA
P&ID
THICKENING POLYMER STORAGE & FEED

DESIGNED: BLB, ADV
DETAILED: PVR
CHECKED: TAH
APPROVED:
DATE:

0 1/2 1
IF THIS BAR DOES NOT MEASURE 1" THEN DRAWING IS NOT TO FULL SCALE

PROJECT NO. 400530

90-I-008
SHEET
OF

PLOTTED: 30-07-2019 15:24:02
D400530

PCS HMI

21-CTRL-RIO-0001

SPS FAIL
UA
1001

SPS HI LEVEL
LAH
0001

PCS HMI

21-CTRL-RIO-0001

SPS FAIL
UA
1001

SPS HI LEVEL
LAH
0001

SANITARY PUMPING SYSTEM LCP
95-SAN-LCP-0001

FROM PLANT SEWER — 8"-SAN-PVC

FROM OPERATION BUILDING — 8"-SAN-PVC

FROM DECHLORINATION STATION — 4"-SAN-PVC

LSHH 0001

LSH 0001

LSL 0001

SAN-V-0003 — 4"-SAN-PVC — ZY | 21-I-001 — TO 16" WWR

SAN-V-0001

SAN-V-0002 — 4"-SAN-PVC — ZZ | 21-I-001 — TO 12" WWR

VALVE VAULT

PACKAGE PUMP STATION

SAN-P-0101

SAN-P-0201

SANITARY
LIFT STATION PUMPS

NOTES:

1. SEE LEGEND AND ABBREVIATIONS ON DRAWINGS 00-I-001, 00-1-002 AND 00-1-003.
2. AREA CODE IS 95 UNLESS OTHERWISE NOTED. SYSTEM CODE IS SAN UNLESS OTHERWISE NOTED.

60% SUBMITTAL - NOT FOR CONSTRUCTION

NO.	BY	CHK	APP	DATE	REVISIONS AND RECORD OF USE
A	BLB	TAH	EVB	7/30/2019	60% SUBMITTAL

BLACK & VEATCH JOINT VENTURE

FILANC BLACK & VEATCH

CITY OF MORRO BAY
FILANC BLACK & VEATCH DB PROPOSAL
RECLAMATION FACILTY (WRF)

P&ID
SANITARY PUMPING SYSTEM

DESIGNED: BLB,KEZ
DETAILED: PVR
CHECKED: TAH
APPROVED:
DATE:

0 1/2 1
IF THIS BAR DOES NOT MEASURE 1" THEN DRAWING IS NOT TO FULL SCALE

PROJECT NO.
400530

95-I-001
SHEET
OF

PLOTTED: 29-07-2019 14:58:27
D400530

STRUCTURAL LEGENDS & ABBREVIATIONS

ABBREVIATIONS

A

ADDL	ADDITIONAL
AFF	ABOVE FINISH FLOOR
AHR	ANCHOR
AHU	AIR HANDLING UNIT
ALT	ALTERNATE
ALUM	ALUMINUM
APPROX	APPROXIMATE
AROD	ANCHOR ROD
ARCH	ARCHITECTURAL
ASSY	ASSEMBLY
AWG	AMERICAN WIRE GAUGE

B

BLDG	BUILDING
BM	BENCHMARK, BEAM
BO	BOTTOM OF
BOT	BOTTOM
BRDG	BRIDGING
BRG	BEARING
BTWN	BETWEEN

C

C	CAMBER
CANTIL	CANTILEVER
CHKD	CHECKERED
CHKDPL	CHECKERED PLATE
CIP	CAST-IN-PLACE
CJ	CONTRACTION JOINT
CJP	COMPLETE JOINT PENETRATION
CL	CENTERLINE
CLR	CLEAR
CMU	CONCRETE MASONRY UNIT
COL	COLUMN
CONC	CONCRETE
CONN	CONNECTION
CONSTR	CONSTRUCTION
CONT	CONTINUOUS, CONTINUATION, CONTROL
COORD	COORDINATE
COV	COVER
CRNR	CORNER
CSJ	CONSTRUCTION JOINT
CTRS	CENTERS

D

db	BAR DIAMETER
DBA	DEFORMED BAR ANCHOR
DET	DETAIL
DIA	DIAMETER
DIM	DIMENSION
DN	DOWN
DWA	DEFORMED WIRE ANCHOR
DWG	DRAWING
DWL	DOWEL

E

E	EAST
EA	EACH
EF	EACH FACE
EJ	EXPANSION JOINT
EL	ELEVATION
EMBED	EMBEDMENT
EMER	EMERGENCY
ENGR	ENGINEER
EQ	EQUAL
EQUIP	EQUIPMENT
EQUIV	EQUIVALENT
EW	EACH WAY
EXIST	EXISTING
EXP	EXPANSION
EXT	EXTERIOR

F

FAB	FABRICATE
f'c	28 DAY CONCRETE STRENGTH =
FD	FLOOR DRAIN
FDN	FOUNDATION
FIN	FINISH(ED)
FLR	FLOOR
FS	FAR SIDE
FT	FOOT
FTG	FOOTING
FUT	FUTURE
FV	FIELD VERIFY
Fy	STRUCTURAL STEEL YIELD STRENGTH =
fy	REINFORCING STEEL YIELD STRENGTH =

G

GA	GAUGE
GALV	GALVANIZED
GEN	GENERAL
GR	GRADE

H

H	HORIZONTAL REACTION
HC	HOLLOW CORE
HEX	HEXAGONAL
HGR	HANGER
HORIZ	HORIZONTAL
HP	HIGH POINT
HSA	HEADED STUD ANCHOR
HSS	HOLLOW STRUCTURAL SECTION

I

ID	INSIDE DIAMETER
IF	INSIDE FACE
IN	INCHES
INT	INTERIOR, INTERNAL
INV	INVERT

J

JT	JOINT

K

K	KIPS (1000 LBS)
KSF	KIPS PER SQUARE FOOT
KSI	KIPS PER SQUARE INCH

L

LAB	LABORATORY
LB	POUND
ld	DEVELOPMENT LENGTH
LIN	LINES
LLBB	LONG LEG BACK TO BACK
LLH	LONG LEG HORIZONTAL
LLV	LONG LEG VERTICAL
LONG	LONGITUDINAL
LP	LOW POINT
LSLT	LONG SLOTTED HOLE TRANSVERSE
LSH	LONG SIDE HORIZONTAL
LSHP	LONG SLOTTED HOLE PARALLEL
LSV	LONG SIDE VERTICAL
LWC	LIGHTWEIGHT CONCRETE

M

M	MOMENT
MAS	MASONRY
MAX	MAXIMUM
MATL	MATERIAL
MC	MOMENT CONNECTION, MECHANICAL COUPLING
MECH	MECHANICAL
MEZZ	MEZZANINE
MFR	MANUFACTURE(R)
MIN	MINIMUM
MISC	MISCELLANEOUS
MTL	METAL

N

N	NORTH
N/A	NOT APPLICABLE
NIC	NOT IN CONTRACT
NO.	NUMBER
NOM	NOMINAL
NS	NEAR SIDE
NTS	NOT TO SCALE
NWC	NORMAL WEIGHT CONCRETE

O

OC	ON CENTER
OD	OUTSIDE DIAMETER
OF	OUTSIDE FACE
OPER	OPERATING
OPH	OPPOSITE HAND
OPNG	OPENING
OPP	OPPOSITE
OVS	OVERSIZED HOLE
OZ	OUNCE

P

P	AXIAL LOAD
PAF	POWDER ACTUATED FASTENER
PAR	PARALLEL
PCC	PRECAST CONCRETE
PCF	POUNDS PER CUBIC FOOT
PERP	PERPENDICULAR
PL	PLATE
PLCS	PLACES
PLF	POUNDS PER LINEAR FOOT
PJP	PARTIAL JOINT PENETRATION
PR	PAIR
PRELIM	PRELIMINARY
PROP	PROPERTY
PSF	POUNDS PER SQUARE FOOT
PSI	POUNDS PER SQUARE INCH
PT	POST TENSIONED

Q

QTY	QUANTITY

R

R	RADIUS
RCP	REINFORCED CONCRETE PIPE
RD	ROOD DRAIN
REF	REFERENCE
REINF	REINFORCEMENT
REQD	REQUIRED
REV	REVISION
RO	ROUGH OPENING

S

S	SOUTH
SC	SLIP CRITICAL, SHEAR CONNECTOR
SCHED	SCHEDULE
SDS	SELF DRILLING SCREW
SECT	SECTION
SH	SHEET
SIM	SIMILAR
SJ	SAW JOINT
SLBB	SHORT LEG BACK TO BACK
SOG	SLAB ON GRADE
SPA	SPACING
SPEC	SPECIFICATION
SPRT	SUPPORT
SQ	SQUARE
SSHP	SHORT SLOTTED HOLE PARALLEL
SSHT	SHORT SLOTTED HOLE TRANSVERSE
STD	STANDARD
STIF	STIFFENER
STIR	STIRRUP
STL	STEEL
STR	STRUCTURE, STRUCTURAL
SYM	SYMMETRICAL

T

T	TREAD, SCHEDULED PLATE THICKNESS
T&B	TOP & BOTTOM
TAN	TANGENT
TEMP	TEMPERATURE
THK	THICK, THICKNESS
THD	THREADED
TO	TOP OF
TOC	TOP OF CONCRETE
TOF	TOP OF FOOTING
TOM	TOP OF MASONRY
TOS	TOP OF STEEL, TOP OF SLAB
TOW	TOP OF WALL
TYP	TYPICAL

U

UNO	UNLESS NOTED OTHERWISE
USGS	UNITED STATES GEOLOGICAL SURVEY

V

VERT	VERTICAL
VNR	VENEER

W

W	WEST
W/	WITH
W/O	WITHOUT
WF	WIDE FLANGE
WP	WORK POINT
WS	WATERSTOP
WT	WEIGHT
WWR	WELDED WIRE REINFORCEMENT

X

x	BY, TIMES
XS	EXTRA STRONG
XXS	DOUBLE EXTRA STRONG

Y

Not Used

Z

ZD	ZONE DAMPER

SPECIAL CHARACTERS

@	AT
&	AND
ø	DIAMETER
#	NUMBER
%	PERCENT

WELD SYMBOL LEGEND

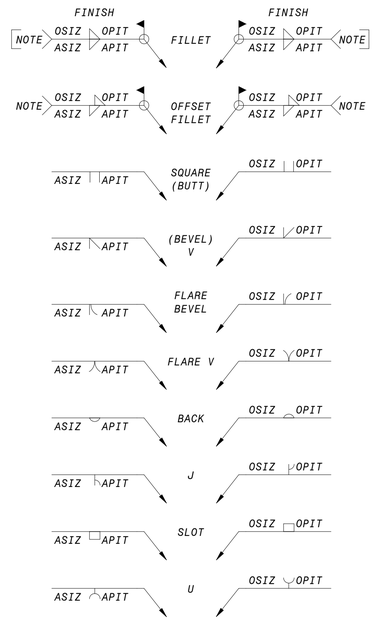

STRUCTURAL TAG LEGEND

CALLOUTS ARE GENERAL TEXT UNLESS NOTED OTHERWISE. THESE TAGS ARE BV CUSTOM AND REQUIRE BIM APPROVED MODEL CONTENT DATA

W00x00	**COLUMN TAG** (BV DATA) COLUMN TYPE
TYPE MARK	**STRUCTURAL FOUNDATION** (TYPE MARK)
X00x00	**STRUCTURAL FRAMING** (BV DATA) FRAMING TYPE
00K00	**STRUCTURAL FRAMING** (BV DATA) JOIST OR SLAB

DESIGN PARAMETERS

GENERAL PARAMETERS

BUILDING CODE	2016 CBC *
ROOF LOADS	
DEAD LOADS (DL)	VARIES
LIVE LOADS (LL)	20 psf

SOILS VALUES (PER SOILS REPORT)

BEARING PRESSURE - RECOMPACTED FILL	3000 psf
BEARING PRESSURE - BEDROCK	5000 psf
LATERAL PASSIVE EFP	350 pcf
AT-REST EFP	65 pcf
ACTIVE EFP	50 pcf
FRICTION COEFFICIENT	0.40

WIND DESIGN BASIS

ULTIMATE WIND SPEED, V_{ULT}	115 mph
RISK CATEGORY	III
EXPOSURE	C
IMPORTANCE FACTOR, I_W	1.00

SEISMIC DESIGN BASIS

SEISMIC DESIGN CATEGORY	D
SITE CLASS	C
SEISMIC FACTORS	
S_S / S_1	1.135 / 0.421
S_{DS} / S_{D1}	0.757 / 0.387
RISK CATEGORY	III
IMPORTANCE FACTOR, I_e	1.25

*THE 2016 CALIFORNIA BUILDING CODE (CBC), BASED ON THE 2015 INTERNATIONAL BUILDING CODE (IBC), IS THE GOVERNING CODE IN THE STATE OF CALIFORNIA.

60% SUBMITTAL - NOT FOR CONSTRUCTION

NO.	BY	CHK	APP	DATE	REVISIONS AND RECORD OF USE

Ashley & Vance ENGINEERING, INC
JOINT VENTURE
BLACK & VEATCH
FILANC

CITY OF MORRO BAY
FILANC BLACK & VEATCH DB PROPOSAL
WATER RECLAMATION FACILITY (WRF)

DESIGNED: I. SHOEBRIDGE
DETAILED: S. BENJAMIN
CHECKED: Checker
APPROVED: Approver
DATE: XX/XX/XXXX

0 1/2 1
IF THIS BAR DOES NOT MEASURE 1" THEN DRAWING IS NOT TO FULL SCALE

PROJECT NO.
400530

00-S-001
SHEET
OF XXX

PLOTTED: 7/29/2019 7:05:51 PM
D400530

STRUCTURAL GENERAL NOTES

GENERAL

1. THE FOLLOWING NOTES, DETAILS, SCHEDULES & SPECIFICATIONS SHALL APPLY TO ALL PHASES OF THIS PROJECT UNLESS SPECIFICALLY NOTED OTHERWISE. NOTES AND DETAILS ON THE STRUCTURAL PLANS SHALL TAKE PRECEDENCE OVER GENERAL NOTES AND TYPICAL DETAILS. WHERE NO DETAILS ARE GIVEN, CONSTRUCTION SHALL BE AS SHOWN FOR SIMILAR WORK.
2. ALL DRAWINGS ARE CONSIDERED TO BE PART OF THE CONTRACT DOCUMENTS. THE DESIGN-BUILDER SHALL BE RESPONSIBLE FOR THE REVIEW AND COORDINATION OF ALL DRAWINGS AND SPECIFICATIONS PRIOR TO THE START OF CONSTRUCTION. ANY DISCREPANCIES SHALL BE BROUGHT TO THE ATTENTION OF THE ENGINEER PRIOR TO THE START OF CONSTRUCTION SO THAT A CLARIFICATION CAN BE ISSUED. ANY WORK PERFORMED IN CONFLICT WITH THE CONTRACT DOCUMENTS OR ANY APPLICABLE CODE REQUIREMENTS SHALL BE CORRECTED BY THE DESIGN-BUILDER AT NO EXPENSE TO THE OWNER OR ENGINEER.
3. ALL INFORMATION ON EXISTING CONDITIONS SHOWN ON THE STRUCTURAL PLANS ARE BASED ON BEST PRESENT KNOWLEDGE AVAILABLE, BUT WITHOUT GUARANTEE OF ACCURACY. THE DESIGN-BUILDER SHALL BE RESPONSIBLE FOR THE VERIFICATIONS OF ALL DIMENSION AND CONDITIONS AT THE SITE. ANY DISCREPANCIES BETWEEN ACTUAL SITE CONDITIONS AND INFORMATION SHOWN ON THE DRAWINGS OR IN THE SPECIFICATIONS SHALL BE BROUGHT TO THE ATTENTION OF THE EOR PRIOR TO THE START OF CONSTRUCTION.
4. REFER TO THE ARCHITECTURAL PLANS FOR THE FOLLOWING:
    (A) DIMENSIONS
    (B) SIZE AND LOCATION OF ALL INTERIOR AND EXTERIOR WALL LOCATIONS.
    (C) SIZE AND LOCATION OF ALL FLOOR, ROOF AND WALL OPENINGS
    (D) SIZE AND LOCATION OF ALL DRAINS, SLOPES, DEPRESSIONS, STEPS, ETC.
    (E) SPECIFICATION OF ALL FINISHES & WATERPROOFING
    (F) ALL OTHER NON-STRUCTURAL ELEMENTS
5. REFER TO THE MECHANICAL, ELECTRICAL AND PLUMBING PLANS FOR THE FOLLOWING:
    (A) SIZE AND LOCATION OF ALL EQUIPMENT
    (B) PIPE RUNS, SLEEVES, HANGERS AND TRENCHES
    (C) ALL OTHER MECHANICAL, ELECTRICAL OR PLUMBING RELATED ELEMENTS
6. CONSTRUCTION MATERIALS SHALL BE UNIFORMLY SPREAD OUT IF PLACED ON FLOOR OR ROOF SO AS TO NOT OVERLOAD THE FRAMING. LOAD SHALL NOT EXCEED THE DESIGN LIVE LOAD PER SQUARE FOOT. IT IS THE DESIGN-BUILDER'S RESPONSIBILITY TO PROVIDE ADEQUATE SHORING AND/OR BRACING AS REQUIRED.
7. SPECIFICATIONS AND DETAILING OF ALL WATERPROOFING AND DRAINAGE ITEMS, WHILE SOMETIMES SHOWN ON THE STRUCTURAL PLANS FOR GENERAL INFORMATION PURPOSES ONLY, ARE SOLELY THE DESIGN RESPONSIBILITY OF OTHERS.
8. THE ENGINEER WILL NOT BE RESPONSIBLE FOR AND WILL NOT HAVE CONTROL OR CHARGE OF CONSTRUCTION MEANS, METHODS, TECHNIQUES, SEQUENCES OR PROCEDURES, OR FOR SAFETY PRECAUTIONS AND PROGRAMS IN CONNECTION WITH THE CONSTRUCTION DELINEATED BY THESE PLANS. IT SHOULD BE UNDERSTOOD THAT THE DESIGN-BUILDER OR HIS/HER AGENT(S) SHALL SUPERVISE AND DIRECT ALL WORK AND SHALL BE SOLELY AND COMPLETELY RESPONSIBLE FOR ALL CONSTRUCTION MEANS, METHODS, TECHNIQUES, SEQUENCES, PROCEDURES AND CONDITIONS ON THE JOB SITE, INCLUDING SAFETY OF ALL PERSONS AND PROPERTY DURING THE ENTIRE PERIOD OF CONSTRUCTION. PERIODIC OBSERVATIONS BY THE ENGINEER, HIS STAFF OR REPRESENTATIVES ARE NOT INTENDED TO INCLUDE VERIFICATION OF DIMENSIONS OR REVIEW THE ADEQUACY OF THE DESIGN-BUILDER'S SAFETY MEASURES ON OR NEAR THE CONSTRUCTION SITE.
9. MODIFICATIONS OF THE PLANS, NOTES, DETAILS AND SPECIFICATIONS SHALL NOT BE PERMITTED WITHOUT PRIOR APPROVAL FROM THE ENGINEER.
10. ALL WORKMANSHIP SHALL CONFORM TO THE BEST PRACTICE PREVAILING IN THE VARIOUS TRADES PERFORMING THE WORK. THE DESIGN-BUILDER SHALL BE RESPONSIBLE FOR COORDINATING THE WORK OF ALL TRADES.
11. IT IS THE DESIGN-BUILDER'S RESPONSIBILITY TO ENSURE THAT ONLY APPROVED STRUCTURAL PLANS ARE USED DURING THE COURSE OF CONSTRUCTION. THE USE OF UNAPPROVED DOCUMENTS SHALL BE AT THE DESIGN-BUILDER'S OWN RISK. CORRECTIONS OF ALL WORK BASED ON SUCH DOCUMENTS SHALL BE PERFORMED AT THE DESIGN-BUILDER'S EXPENSE.
12. THESE PLANS AND SPECIFICATIONS REPRESENT THE STRUCTURAL DESIGN ONLY. NO INFORMATION NOR WARRANTY IS PROVIDED FOR THE WORK OF ANY OTHER CONSULTANT (ARCHITECT, MECHANICAL, ELECTRICAL, ETC.). THIS INCLUDES, BUT IS NOT LIMITED TO, WATERPROOFING, DRAINAGE, VENTILATION, ACCESSIBILITY, OR DIMENSIONS.

FOUNDATIONS

1. REFER TO STRUCTURAL DESIGN PARAMETERS SECTION ON SHEET 00-S-001 FOR ALL SOIL DESIGN VALUES USED IN CALCULATIONS.
2. SOILS VALUES PER GEOLOGIC/GEOTECHNICAL REPORT (OR "SOILS REPORT") BY EARTH SYSTEMS PACIFIC, FILE NO. 301964-002, DATED JULY 1, 2019. THIS REPORT AND ALL RECOMMENDATIONS CONTAINED THEREIN ARE TO BE CONSIDERED A PART OF THESE PLANS.
3. IT IS THE DESIGN-BUILDER'S RESPONSIBILITY TO OBTAIN A COPY OF THE SOILS REPORT FROM THE OWNER. A COPY OF THE SOILS REPORT SHALL BE ON THE JOB SITE DURING THE COURSE OF CONSTRUCTION.
4. UNEXPECTED SOIL CONDITIONS: ALLOWABLE VALUES AND SUBSEQUENT FOUNDATION DESIGNS ARE BASED ON SOIL CONDITIONS WHICH ARE SHOWN BY TEST BORINGS. ACTUAL SOIL CONDITIONS WHICH DEVIATE APPRECIABLY FROM THAT SHOWN IN THE TEST BORINGS SHALL BE REPORTED TO THE ENGINEER IMMEDIATELY.
5. ALL COMPACTION, FILL, BACKFILLING AND SITE PREPARATION SHALL BE PERFORMED IN ACCORDANCE WITH PROJECT SOILS REPORT OR THE GOVERNING BUILDING CODE CHAPTER 18 & APPENDIX J. ALL SUCH WORK SHALL BE PERFORMED PER THE RECOMMENDATIONS OF THE PROJECT SOILS ENGINEER.
6. EXCAVATE TO REQUIRED DEPTHS AND DIMENSIONS (AS INDICATED IN THE DRAWINGS), CUT SQUARE AND SMOOTH WITH FIRM LEVEL BOTTOMS. CARE SHALL BE TAKEN NOT TO OVER-EXCAVATE FOUNDATION AT LOWER ELEVATION AND PREVENT DISTURBANCE OF SOILS AROUND HIGH ELEVATION.
7. FOUNDATIONS SHALL BE POURED IN NEAT EXCAVATIONS.
8. EXCAVATE ALL FOUNDATIONS TO REQUIRED DEPTHS INTO COMPACTED FILL OR NATURAL SOIL (AS PER PLANS AND DETAILS) AND AS VERIFIED BY THE BUILDING OFFICIAL AND/OR SOILS ENGINEER.
9. ALL FOUNDATIONS SHALL BE INSPECTED AND APPROVED BY THE APPROPRIATE BUILDING OFFICIAL AND/OR A REPRESENTATIVE OF THE SOILS ENGINEER PRIOR TO FORMING AND PLACEMENT OF REINFORCING OR CONCRETE.
10. FOUNDATIONS SHALL NOT BE POURED UNTIL ALL REQUIRED REINFORCING STEEL, FRAMING HARDWARE, SLEEVES, INSERTS, CONDUITS, PIPES, ETC. AND FORMWORK IS PROPERLY PLACED AND INSPECTED BY THE APPROPRIATE BUILDING OFFICIAL/INSPECTOR(S).
11. IT IS THE RESPONSIBILITY OF THE DESIGN-BUILDER IN CHARGE OF FRAMING TO PROPERLY POSITION ALL HOLDOWN BOLTS, ANCHOR BOLTS, COLUMN BASES, AND ALL OTHER CAST-IN-PLACE HARDWARE. REFER TO TYPICAL DETAILS. ALL HARDWARE TO BE SECURED PRIOR TO FOUNDATION INSPECTIONS.
12. THE SIDES AND BOTTOMS OF DRY EXCAVATIONS MUST BE MOISTENED JUST PRIOR TO PLACING CONCRETE. CONVERSELY, DE-WATER FOOTINGS AS REQUIRED TO REMOVE STANDING WATER AND TO MAINTAIN OPTIMUM WORKING CONDITIONS.
13. THE DESIGN-BUILDER SHALL BE SOLELY RESPONSIBLE FOR ALL EXCAVATION PROCEDURES INCLUDING LAGGING, SHORING, AND THE PROTECTION OF ADJACENT PROPERTY, STRUCTURES, STREETS, AND UTILITIES IN ACCORDANCE WITH ALL FEDERAL, STATE AND LOCAL SAFETY ORDINANCES. THE DESIGN-BUILDER SHALL PROVIDE FOR THE DESIGN AND INSTALLATION OF ALL CRIBBING, BRACING AND SHORING REQUIRED.

60% SUBMITTAL - NOT FOR CONSTRUCTION

NO.	BY	CHK	APP	DATE	REVISIONS AND RECORD OF USE

Ashley & Vance ENGINEERING, INC
JOINT VENTURE
BLACK & VEATCH
FILANC

CITY OF MORRO BAY
FILANC BLACK & VEATCH DB PROPOSAL
WATER RECLAMATION FACILITY (WRF)

DESIGNED: I. SHOEBRIDGE
DETAILED: S. BENJAMIN
CHECKED: Checker
APPROVED: Approver
DATE: XX/XX/XXXX

0 1/2 1
IF THIS BAR DOES NOT MEASURE 1" THEN DRAWING IS NOT TO FULL SCALE

PROJECT NO. 400530

00-S-002
SHEET OF XXX

PLOTTED: 7/29/2019 7:05:51 PM
D400530

STATEMENT OF SPECIAL INSPECTIONS, 2016 CBC

1. THIS STATEMENT OF SPECIAL INSPECTION IS SUBMITTED IN FULFILLMENT OF THE REQUIREMENTS OF THEGOVERNING BUILDING CODE, SECTION 1704 AND 1705.
2. SPECIAL INSPECTIONS AND TESTINGS WILL BE PREFORMED IN ACCORDANCE WITH THE APPROVED PLANS AND SPECIFICATIONS, THIS STATEMENT AND THE GOVERNING BUILDING CODE, SECTION 1704, 1705, 1707, AND 1708.
3. THE SCHEDULE OF SPECIAL INSPECTIONS SUMMARIZES THE SPECIAL INSPECTIONS AND TESTS REQUIRED. SPECIAL INSPECTORS WILL REFER TO THE APPROVED PLANS AND SPECIFICATIONS FOR DETAILED SPECIAL INSPECTION REQUIREMENTS. ANY ADDITIONAL TESTS AND INSPECTIONS REQUIRED BY THE APPROVED PLANS AND SPECIFICATIONS WILL ALSO BE PERFORMED.
4. INTERIM REPORTS WILL BE SUBMITTED TO THE BUILDING OFFICIAL AND THE REGISTERED DESIGN PROFESSIONAL IN RESPONSIBLE CHARGE IN ACCORDANCE WITH THE GOVERNING BUILDING CODE SECTION 1704.2.4.
5. A FINAL REPORT OF SPECIAL INSPECTIONS DOCUMENTING REQUIRED SPECIAL INSPECTIONS, TESTING AND CORRECTION OF ANY DISCREPANCIES NOTED IN THE INSPECTIONS SHALL BE SUBMITTED PRIOR TO ISSUANCE OF A CERTIFICATE OF USE AND OCCUPANCY (SECTION 1704.2.4). THE FINAL REPORT WILL DOCUMENT:
   (A) REQUIRED SPECIAL INSPECTIONS.
   (B) CORRECTION OF DISCREPANCIES NOTED IN INSPECTIONS.
6. THE OWNER RECOGNIZES HIS OR HER OBLIGATION TO ENSURE THAT THE CONSTRUCTION COMPLIES WITH THE APPROVED PERMIT DOCUMENTS AND TO IMPLEMENT THIS PROGRAM OF SPECIAL INSPECTIONS. IN PARTIAL FULFILLMENT OF THESE OBLIGATIONS, THE OWNER WILL RETAIN AND DIRECTLY PAY FOR THE SPECIAL INSPECTIONS AS REQUIRED IN THE GOVERNING BUILDING CODE, SECTION 1704.2.
7. 1704.4 DESIGN-BUILDER RESPONSIBILITY. EACH DESIGN-BUILDER RESPONSIBLE FOR THE CONSTRUCTION OF A MAIN WIND- OR SEISMIC-FORCE-RESISTING SYSTEM, DESIGNATED SEISMIC SYSTEM OR A WIND- OR SEISMIC- RESISTING COMPONENT LISTED IN THE STATEMENT OF SPECIAL INSPECTIONS SHALL SUBMIT A WRITTEN STATEMENT OF RESPONSIBILITY TO THE BUILDING OFFICIAL AND THE OWNER PRIOR TO THE COMMENCEMENT OF WORK ON THE SYSTEM OR COMPONENT. THE DESIGN-BUILDER'S STATEMENT OF RESPONSIBILITY SHALL CONTAIN ACKNOWLEDGEMENT OF AWARENESS OF THE SPECIAL REQUIREMENTS CONTAINED IN THE STATEMENT OF SPECIAL INSPECTION.

SCHEDULE OF TESTING AGENCIES & SPECIAL INSPECTORS

THE FOLLOWING ARE THE TESTING AGENCIES AND SPECIAL INSPECTORS THAT WILL BE RETAINED TO CONDUCT TESTS AND INSPECTION ON THIS PROJECT.

RESPONSIBILITY	FIRM	ADDRESS, TELEPHONE, EMAIL
1. SPECIAL INSPECTION (EXCEPT FOR GEOTECHNICAL)		
2. MATERIALS TESTING		
3. GEOTECHNICAL INSPECTION		
*		

* ADDITIONAL INSPECTIONS MAY BE REQUIRED AT THE DISCRETION OF THE BUILDING OFFICIAL.

SEISMIC REQUIREMENTS (SECTION 1705.12)

DESCRIPTION OF SEISMIC-FORCE-RESISTING SYSTEM AND DESIGNATED SEISMIC SYSTEMS SUBJECT TO SPECIAL INSPECTIONS PER SECTION 1705.11:

STEEL ORDINARY MOMENT FRAMES (ASCE 7, TABLE 12.2-1, LINE C.4)
STEEL ORDINARY BRACED FRAMES (ASCE 7, TABLE 12.2-1, LINE B.3)

THE EXTENT OF THE MAIN SEISMIC-FORCE-RESISTING SYSTEM IS DEFINED IN MORE DETAIL IN THE CONSTRUCTION DOCUMENTS.

WIND REQUIREMENTS (SECTION 1705.11)

DESCRIPTION OF MAIN WIND-FORCE-RESISTING SYSTEM AND DESIGNATED SEISMIC SYSTEMS SUBJECT TO SPECIAL INSPECTIONS PER SECTION 1705.10:

NOT APPLICABLE

THE EXTENT OF THE MAIN WIND-FORCE-RESISTING SYSTEM IS DEFINED IN MORE DETAIL IN THE CONSTRUCTION DOCUMENTS.

SCHEDULE OF SPECIAL INSPECTIONS

COLUMN HEADER NOTATION USED IN TABLE:
- C INDICATES CONTINUOUS INSPECTION IS REQUIRED.
- P INDICATES PERIODIC INSPECTIONS ARE REQUIRED. THE NOTES AND/OR CONTRACT DOCUMENTS SHOULD CLARIFY.

BOX ENTRY NOTATION USED IN TABLE:
- X IS PLACED IN THE APPROPRIATE COLUMN TO DENOTE EITHER "C" CONTINUOUS OR "P" PERIODIC INSPECTIONS.
- -- DENOTES A ONE-TIME ACTIVITY OR ONE WHOSE FREQUENCY IS DEFINED IN SOME OTHER MANNER.

ADDITIONAL DETAILS REGARDING INSPECTIONS ARE PROVIDED IN THE PROJECT SPECIFICATIONS OR NOTES ON THE DRAWINGS.

VERIFICATION & INSPECTION	C	P	NOTES
1704.2.5 - INSPECT FABRICATOR'S FABRICATION AND QUALITY CONTROL PROCEDURES.	--	--	
1705.2 - STEEL			
1. MATERIAL VERIFICATION OF HIGH-STRENGTH BOLTS, NUTS, AND WASHERS		X	
A. IDENTIFICATION MARKINGS TO CONFORM TO ASTM STANDARDS SPECIFIED IN THE APPROVED CONSTRUCTION DOCUMENTS		X	
B. MANUFACTURER'S CERTIFICATE OF COMPLIANCE REQUIRED		X	
2. INSPECTION OF HIGH-STRENGTH BOLTING:			
A. BEARING-TYPE CONNECTIONS		X	
B. SLIP-CRITICAL CONNECTIONS	X		
3. MATERIAL VERIFICATION OF STRUCTURAL STEEL:			
A. IDENTIFICATION MARKINGS TO CONFORM TO ASTM STANDARDS SPECIFIED IN THE APPROVED CONSTRUCTION DOCUMENTS	--	--	
B. MANUFACTURER'S MILL TEST REPORTS	--	--	
4. MATERIAL VERIFICATION OF WELD FILLER MATERIALS:			
A. IDENTIFICATION MARKINGS TO CONFORM TO AWS DESIGNATION LISTED IN THE WPS	--	--	
B. MANUFACTURER'S CERTIFICATE OF COMPLIANCE REQUIRED	--	--	
5. INSPECTION OF WELDING: A. STRUCTURAL STEEL			
1) COMPLETE AND PARTIAL PENETRATION GROOVE WELDS	X		
2) MULTI-PASS FILLET WELDS	X		
3) SINGLE-PASS FILLET WELDS > 5/16"		X	
4) SINGLE-PASS FILLET WELDS < 5/16"		X	
5) FLOOR AND ROOF DECK WELDS		X	
b. REINFORCING STEEL			
1) VERIFICATION OF WELDABILITY OF REINFORCING STEEL OTHER THAN ASTM A706		X	
2) REINFORCING STEEL RESISTING FLEXURAL AND AXIAL FORCES IN INTERMEDIATE AND SPECIAL MOMENT FRAMES, AND BOUNDARY ELEMENTS OF SPECIAL REINFORCED CONCRETE SHEAR WALLS, AND SHEAR REINFORCEMENT	X		
3) SHEAR REINFORCEMENT	X		
4) OTHER REINFORCING STEEL		X	
6. INSPECTION OF STEEL FRAME JOINT DETAILS FOR COMPLIANCE WITH APPROVED CONSTRUCTION DOCUMENTS (BRACING & STIFFENING, MEMBER LOCATIONS, APPLICATION OF JOINT DETAILS AT EACH CONNECTION, ETC.)		X	
7. WELDED STUDS WHEN USED FOR STRUCTURAL DIAPHRAGMS		X	
8. WELDING OF COLD FORMED SHEET STEEL FRAMING MEMBERS		X	
9. WELDING OF STAIRS AND RAILING SYSTEMS		X	
1705.3 - CONCRETE			
1. INSPECT REINFORCING STEEL, INCLUDING PRESTRESSING TENDONS, VERIFY AND PLACEMENT		X	
2. INSPECT REINFORCING STEEL WELDING IN ACCORDANCE WITH TABLE **1705.2 - STEEL**, ITEM 5A	--	--	
3. INSPECT BOLTS TO BE CAST IN CONCRETE PRIOR TO AND DURING PLACEMENT OF CONCRETE	X		
4. INSPECT ANCHORS POST-INSTALLED IN HARDENED CONCRETE			
a. ADHESIVE ANCHORS[1] INSTALLED IN HORIZONTALLY OR UPWARDLY INCLINDED ORIENTATIONS TO RESIST SUSTAINED TENSION	X		
b. MECHANICAL ANCHORS[2] AND ADHESIVE ANCHORS[1] NOT DEFINED IN 4.A		X	
5. VERIFYING USE OF REQUIRED DESIGN MIX		X	
6. PRIOR TO CONCRETE PLACEMENT, FABRICATE SPECIMENS FOR STRENGTH TESTS, PERFORM SLUMP AND AIR CONTENT TESTS, AND DETERMINE THE TEMPERATURE OF THE CONCRETE	X		
7. INSPECT CONCRETE AND SHOTCRETE PLACEMENT FOR PROPER APPLICATION TECHNIQUES	X		
8. VERIFY MAINTENANCE OF SPECIFIED CURING TEMPERATURE AND TECHNIQUES		X	
9. INSPECT PRESTRESSED CONCRETE FOR:			
A. APPLICATION OF PRESTRESSING FORCES	X		
B. GROUTING OF BONDED PRESTRESSING TENDONS	X		
10. INSPECT ERECTION OF PRECAST CONCRETE MEMBERS		X	
11. VERIFY IN-SITU CONCRETE STRENGTH, PRIOR TO STRESSING OF TENDONS IN POST-TENSIONED CONCRETE AND PRIOR TO REMOVAL OF SHORES AND FORMS FROM BEAMS AND STRUCTURAL SLABS		X	
12. INSPECT FORMWORK FOR SHAPE, LOCATION, AND DIMENSIONS OF THE CONCRETE MEMBER BEING FORMED		X	

FOOTNOTES:
1. PRIOR TO EPOXY PLACEMENT, IT MUST BE VERIFIED THAT THE HOLE IS CLEAN, DRY, AND FREE OF LOOSE DEBRIS
2. PERIODIC INSPECTION SHALL TAKE PLACE SUCH THAT THE INSTALLATION OF A MINIMUM OF TWO (2) ANCHORS PER EACH SHEAR WALL ARE OBSERVED

VERIFICATION & INSPECTION	C	P	NOTES
1705.4 - MASONRY - LEVEL B QUALITY ASSURANCE			
1. VERIFY COMPLIANCE WITH THE APPROVED SUBMITTALS		X	
2. AS MASONRY CONSTRUCTION BEGINS, VERIFY THAT THE FOLLOWING ARE IN COMPLIANCE:			
A. PROPORTIONS OF SITE-PREPARED MORTAR		X	
B. CONSTRUCTION OF MORTAR JOINTS		X	
C. GRADE AND SIZE OF PRETRESSING TENDONS AND ANCHORAGES		X	
D. LOCATION OF REINFORCEMENT, CONNECTORS, AND PRESTRESSING TENDONS AND ANCHORAGES		X	
E. PRESTRESSING TECHNIQUE		X	
3. PRIOR TO GROUTING, VERIFY THAT THE FOLLOWING ARE IN COMPLIANCE:			
A. GROUT SPACE IS CLEAN		X	
B. GRADE, TYPE, AND SIZE OF REINFORCEMENT AND ANCHOR BOLTS, AND PRESTRESSING TENDONS AND ANCHORAGES		X	
C. PLACEMENT OF REINFORCEMENT, CONNECTORS, AND PRESTRESSING TENDONS AND ANCHORAGES		X	
D. PROPORTIONS OF SITE-PREPARED GROUT AND PRESTRESSING GROUT FOR BONDED TENDONS		X	
E. CONSTRUCTION OF MORTAR JOINTS		X	
4. VERIFY DURING CONSTRUCTION			
A. SIZE AND LOCATION OF THE STRUCTURAL ELEMENTS		X	
B. TYPE, SIZE, AND LOCATION OF ANCHORS, INCLUDING OTHER DETAILS OF ANCHORAGE OF THE MASONRY TO STRUCTURAL MEMBERS, FRAMES, OR OTHER CONSTRUCTION		X	
C. WELDING OF REINFORCEMENT IN ACCORDANCE WITH **TABLE 1705.2**, ITEM 5A	--	--	
D. PREPARATION, CONSTRUCTION, AND PROTECTION OF MASONRY DURING COLD WEATHER (TEMPERATURE BELOW 40ºF) OR HOT WEATHER (TEMPERATURE ABOVE 90ºF)		X	
E. APPLICATION AND MEASUREMENT OF PRESTRESSING FORCE	X		
F. PLACEMENT OF GROUT AND PRESTRESSING GROUT FOR BONDED TENDONS IS IN COMPLIANCE	X		
5. OBSERVE PREPARATION OF GROUT SPECIMENS, MORTAR SPECIMENS, AND/OR PRISMS.		X	
1705.6 - SOILS			
1. VERIFY MATERIALS BELOW SHALLOW FOOTINGS ARE ADEQUATE TO ACHIEVE THE DESIRED BEARING CAPACITY		X	
2. VERIFY EXCAVATIONS ARE EXTENDED TO PROPER DEPTH AND HAVE REACHED PROPER MATERIAL		X	
3. PERFORM CLASSIFICATION AND TESTING OF COMPACTED FILL MATERIALS		X	
4. VERIFY USE OF PROPER MATERIALS, DENSITIES, AND LIFT THICKNESSES DURING PLACEMENT AND COMPACTION OF COMPACTED FILL	X		
5. PRIOR TO PLACEMENT OF COMPACTED FILL, INSPECT SUBGRADE AND VERIFY THAT SITE HAS BEEN PREPARED PROPERLY		X	
1705.11.3 - WIND RESISTING COMPONENTS			
1. INSPECT FASTENING OF ROOF COVERINGS, ROOF DECKS, AND FRAMING CONNECTIONS		X	
2. INSPECT FASTENING OF EXTERIOR WALL COVERINGS AND WALL CONNECTIONS TO ROOF AND FLOOR DIAPHRAGMS AND FRAMING		X	
1705.12.1 - SEISMIC RESISTANCE - STRUCTURAL STEEL			
1. SPECIAL INSPECTIONS OF THE STRUCTURAL STEEL IN THE SEISMIC FORCE-RESISTING SYSTEMS SHALL BE PERFORMED IN ACCORDANCE WITH THE QUALITY ASSURANCE REQUIREMENTS OF AISC 341			
2. SPECIAL INSPECTIONS OF THE STRUCTURAL STEEL ELEMENTS IN THE SEISMIC FORCE RESISTING SYSTEMS OTHER THAN THOSE COVERED ABOVE, INCLUDING STRUTS, COLLECTORS, CHORDS, AND FOUNDATION ELEMENTS SHALL BE PERFORMED IN ACCORDANCE WITH THE QUALITY ASSURANCE REQUIREMENTS OF AISC 341		X	

VERIFICATION & INSPECTION	C	P	NOTES
1705.12.5 - SEISMIC RESISTANCE - ARCHITECTURAL COMPONENTS			
1. INSPECT ERECTION AND FASTENING OF EXTERIOR CLADDING, INTERIOR AND EXTERIOR NONBEARING WALLS AND INTERIOR AND EXTERIOR VENEER GREATER THAN 30 FEET IN HEIGHT ABOVE GRADE OR WALKING SURFACE		X	
2. INSPECT ERECTION AND FASTENING OF EXTERIOR CLADDING AND INTERIOR AND EXTERIOR VENEER WEIGHING MORE THAN 5 PSF		X	
3. INSPECT ERECTION AND FASTENING OF INTERIOR NONBEARING WALLS WEIGHING MORE THAN 15 PSF		X	
1705.12.6 - SEISMIC RESISTANCE - PLUMBING, MECHANICAL AND ELECTRICAL COMPONENTS			
1. INSPECT ANCHORAGE OF ELECTRICAL EQUIPMENT FOR EMERGENCY AND STANDBY POWER SYSTEMS		X	
2. INSPECT ANCHORAGE OF NON-EMERGENCY ELECTRICAL EQUIPMENT		X	
3. INSPECT INSTALLATION AND ANCHORAGE OF PIPING SYSTEMS DESIGNED TO CARRY HAZARDOUS MATERIALS AND THEIR ASSOCIATED MECHANICAL UNITS		X	
4. INSPECT INSTALLATION AND ANCHORAGE OF DUCTWORK DESIGNED TO CARRY HAZARDOUS MATERIALS		X	
5. INSPECT INSTALLATION AND ANCHORAGE OF VIBRATION ISOLATION SYSTEMS WHERE THE APPROVED CONSTRUCTION DRAWINGS REQUIRE A NOMINAL CLEARANCE OF 1/4" OR LESS BETWEEN THE EQUIPMENT AND SUPPORT STRUCTURE		X	
1705.12.7 - INSPECT ANCHORAGE OF STORAGE RACKS THAT ARE 8 FEET OR GREATER IN HEIGHT		X	
1705.12.8 - INSPECT SEISMIC ISOLATION SYSTEMS IN SEISMICALLY ISOLATED STRUCTURES DURING FABRICATION AND INSTALLATION OF ISOLATOR UNITS AND ENERGY DISSIPATION DEVICES		X	

NO.	BY	CHK	APP	DATE	REVISIONS AND RECORD OF USE

Ashley & Vance ENGINEERING, INC
JOINT VENTURE
BLACK & VEATCH
FILANC

CITY OF MORRO BAY
FILANC BLACK & VEATCH DB PROPOSAL
WATER RECLAMATION FACILITY (WRF)

DESIGNED: I. SHOEBRIDGE
DETAILED: S. BENJAMIN
CHECKED: Checker
APPROVED: Approver
DATE: XX/XX/XXXX

0 1/2 1
IF THIS BAR DOES NOT MEASURE 1" THEN DRAWING IS NOT TO FULL SCALE

PROJECT NO. 400530

00-S-003
SHEET OF XXX

60% SUBMITTAL - NOT FOR CONSTRUCTION

PLOTTED: 7/29/2019 7:05:52 PM
D400530

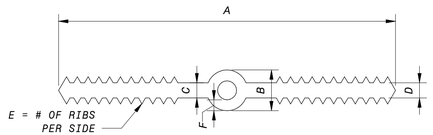

TYPE	A	B	C	D	E	F	APPLICATION
W/O CENTERBULB	6"	-	3/8"	3/8"	7	-	SEE NOTES 2 & 6
W/O CENTERBULB	9"	-	3/8"	3/8"	10	-	SEE NOTES 2 & 7
CENTERBULB	6"	7/8"	3/8"	3/8"	8	9/16"	SEE NOTES 4 & 6
CENTERBULB	9"	1"	3/8"	3/8"	8	1/4"	SEE NOTE 4
CENTERBULB	9"	1 1/2"	3/8"	1/4"	8	5/16"	SEE NOTE 5

NOTES:
1. SEE SPECIFICATIONS FOR MATERIAL REQUIREMENTS. NON-METALLIC WATERSTOPS ARE REQUIRED FOR CONCRETE JOINTS SUBJECTED TO CHLORINATED WATER, SEAWATER, AND WATERBORNE CHEMICALS.
2. FOR CONSTRUCTION JOINTS.
3. SEE SPLICE DETAIL (**1/00-S-101**).
4. FOR EXPANSION/CONTROL JOINTS 1" AND NARROWER.
5. FOR EXPANSION/CONTROL JOINTS WIDER THAN 1".
6. USE 6 INCH WATERSTOPS IN ALL JOINTS IN CONCRETE SECTIONS LESS THAN 12" IN THICKNESS UNLESS SPECIFICALLY SHOWN OTHERWISE.
7. USE 9 INCH WATERSTOPS IN ALL JOINTS IN CONCRETE SECTIONS GREATER THAN 12" IN THICKNESS UNLESS SPECIFICALLY SHOWN OTHERWISE.
8. PVC WATERSTOP MUST MEET OR EXCEED THE PERFORMANCE REQUIRED IN SPECIFICATIONS, INCLUDING THE U.S. ARMY CORPS OF ENGINEERS CRD-C-572-74.
9. WATERSTOPS ARE TO BE PROPERLY POSITIONED PRIOR TO CONCRETE PLACEMENT AND MUST BE SECURELY POSITIONED IN THE FORMS BY TYING OFF THE OUTER EDGE OF THE WATERSTOP TO ADJACENT REINFORCING STEEL.

8 RIBBED PVC WATERSTOP SCHEDULE
NO SCALE

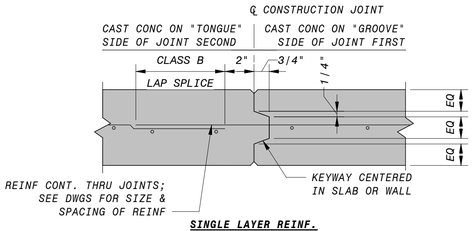

SINGLE LAYER REINF.

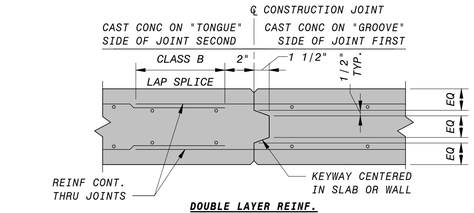

DOUBLE LAYER REINF.

7 CONSTRUCTION JOINT AT WALL OR SLAB (NON-WATER BEARING ONLY)
NO SCALE

TYPICAL CONCRETE SLAB JOINTS

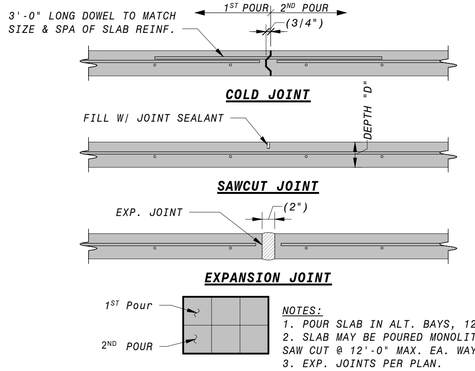

NOTES:
1. POUR SLAB IN ALT. BAYS, 12'-0" SQ. MAX.
2. SLAB MAY BE POURED MONOLITHICALLY IF SAW CUT @ 12'-0" MAX. EA. WAY
3. EXP. JOINTS PER PLAN.

4 TYPICAL CONCRETE SLAB JOINTS
NO SCALE

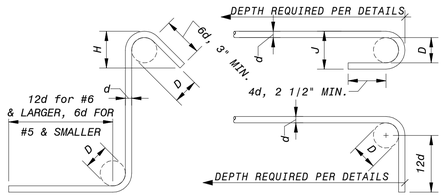

STANDARD TIES & STIRRUPS

BAR SIZE	D	H (APPROX.)
#3	1-1/2"	3"
#4	2"	3"
#5	2-1/2"	3-3/4"
#6	4-1/2"	4-1/2"
#7	5-1/4"	5-1/4"
#8	6"	6"

STANDARD END HOOKS

BAR SIZE	D	J
#3	2-1/4"	3"
#4	3"	4"
#5	3-3/4"	5"
#6	4-1/2"	6"
#7	5-1/4"	7"
#8	6"	8"
#9	9 1/2"	11 3/4"
#10	10 3/4"	1' 1 1/4"

NOTE:
ALL BAR BEND DIAMETERS & END LENGTHS MUST CONFORM TO THE CRSI MANUAL OF STANDARD PRACTICE

5 TYP. REINFORCEMENT BAR BENDS
NO SCALE

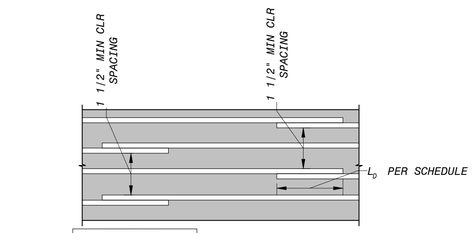

	BAR SIZE	CLASS B TENSION, L_D LAP SPLICE LENGTH	HOOKED, L_{DH}	
TYPICAL - f'c = 3 ksi	#3	21"	9"	VALUES ASSUME 60 KSI, NON-EPOXY REINFORCEMENT & 3 KSI NORMAL WEIGHT CONCRETE
	#4	28"	11"	
	#5	36"	14"	
	#6	43"	17"	
	#7	62"	20"	
	#8	71"	22"	
	#9	80"	25"	
	#10	89"	28"	
TYPICAL - f'c = 4 ksi	BAR SIZE	TENSION, L_D LAP SPLICE LENGTH	HOOKED, L_{DH}	VALUES ASSUME 60 KSI, NON-EPOXY REINFORCEMENT & 4 KSI NORMAL WEIGHT CONCRETE
	#3	18"	8"	
	#4	25"	10"	
	#5	31"	12"	
	#6	37"	15"	
	#7	54"	17"	
	#8	62"	19"	
	#9	69"	22"	
	#10	77"	24"	
TYPICAL - f'c = 4.5 ksi	BAR SIZE	TENSION, L_D LAP SPLICE LENGTH	HOOKED, L_{DH}	VALUES ASSUME 60 KSI, NON-EPOXY REINFORCEMENT & 4.5 KSI NORMAL WEIGHT CONCRETE
	#3	17"	7"	
	#4	23"	9"	
	#5	29"	12"	
	#6	35"	14"	
	#7	51"	16"	
	#8	58"	18"	
	#9	65"	21"	
	#10	73"	23"	

1 STD LAP SPLICES
NO SCALE

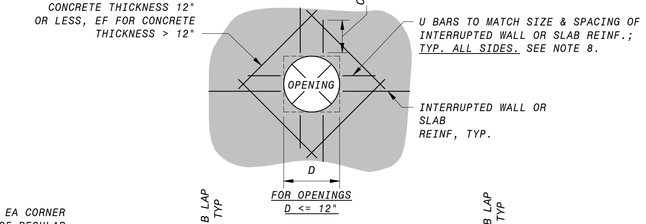

FOR OPENINGS D <= 12"

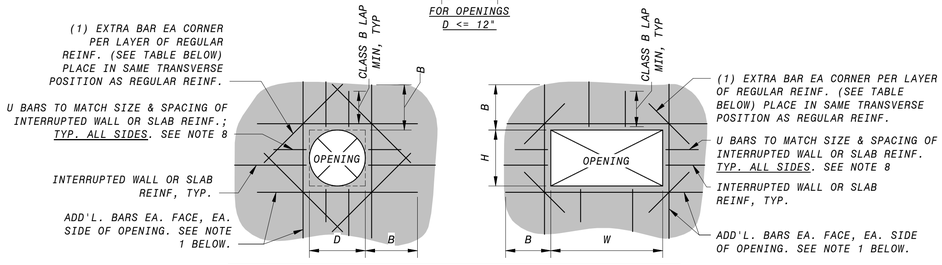

THICKNESS OF CONCRETE	BAR SIZE	BAR LENGTH RECTANGULAR OPNG	BAR LENGTH CIRCULAR OPNG
< 12"	4	3'-0"	D+24"
12" TO 18"	5	3'-6"	D+24"
> 18"	6	4'-0"	D+24"

FOR OPENINGS 21" <= D/H/W <= 54"

NOTES:
1. 50% OF INTERRUPTED WALL OR SLAB REINF. TO BE PLACED EA. SIDE OF OPENING. BARS TO BE SPACED AT 4" O.C. OR S/2, WHICHEVER IS LESS EA. FACE (S = BAR SPACING PER PLANS). LENGTH OF ADD'L. REINF. = H + W + (2x CLASS B LAP)
2. SEE PLAN AND SECTIONS FOR TYP. REINF., REINF. SPACING AND WALL OR SLAB THICKNESS.
3. ALL WALL AND/OR SLAB OPENINGS TO BE COORDINATED AND DETAILED ON REINF. SHOP DRAWINGS.
4. ADD'L. OPENINGS SHALL NOT BE PROVIDED W/OUT EOR APPROVAL.
5. THIS DETAIL SHALL APPLY AT ALL SIDES OF WALL OR SLAB OPENINGS AND/OR DISCONTINUITIES. APPLICABLE REINF. TO BE SHOWN ON SHOP DRAWINGS.
6. DO NOT CORE HOLES THROUGH STRUCTURAL WALLS OR SLABS WITHOUT PRIOR APPROVAL FROM EOR.
7. 2" CLEAR TO CONCRETE OPENINGS OR OUTSIDE FACE OF PIPES AND PIPE SLEEVES. DO NOT OVERCUT REINFORCEMENT FOR EASIER PLACEMENT OF WEEP RINGS AND FLANGES.
8. U BARS MAY BE REPLACED WITH STRAIGHT BARS AT CONCRETE WITH SINGLE MAT OF REINFORCEMENT.

9 TYP REINF AT WALL OR SLAB OPENINGS (<=54")
NO SCALE

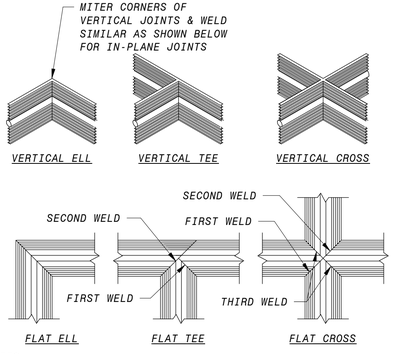

NOTES:
1. ALL WELDS SHALL BE PER WATERSTOP MANUFACTURER'S RECOMMENDATIONS.
2. ALL TRANSITIONS, INTERSECTIONS, AND SPLICES ARE TO BE HEAT WELDED TO MAINTAIN CONTINUITY. FACTORY-MADE FABRICATIONS ARE RECOMMENDED FOR ALL INTERSECTIONS AND CHANGES OF DIRECTION.

6 WATERSTOP JOINTS
NO SCALE

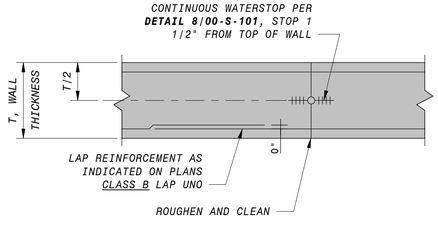

NOTE:
1. ALL REINFORCING CONTINUOUS ACROSS JOINT.
2. COORDINATE LOCATIONS WITH EOR PRIOR TO PLACEMENT.

2 WALL VERTICAL CONSTRUCTION JOINT
NO SCALE

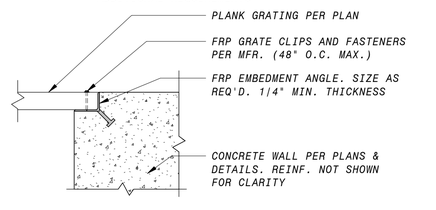

3 PLANK GRATING SEAT
NO SCALE

60% SUBMITTAL - NOT FOR CONSTRUCTION

NO.	BY	CHK	APP	DATE	REVISIONS AND RECORD OF USE

Ashley&Vance ENGINEERING, INC
BLACK & VEATCH
JOINT VENTURE
FILANC

CITY OF MORRO BAY
FILANC BLACK & VEATCH DB PROPOSAL
WATER RECLAMATION FACILITY (WRF)

STANDARD DETAILS 1
STRUCTURAL

DESIGNED: I. SHOEBRIDGE
DETAILED: S. BENJAMIN
CHECKED: Checker
APPROVED: Approver
DATE: XX/XX/XXXX

0 1/2 1
IF THIS BAR DOES NOT MEASURE 1" THEN DRAWING IS NOT TO FULL SCALE

PROJECT NO. 400530

00-S-101
SHEET OF XXX

PLOTTED: 7/29/2019 7:05:54 PM
D400530

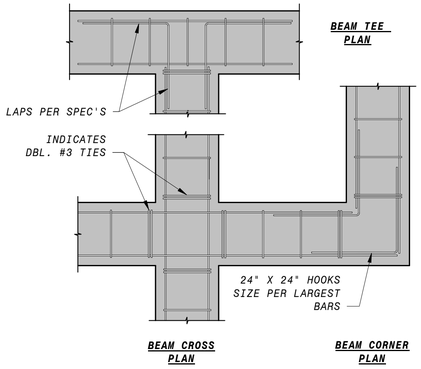

12 BEAM TO BEAM CONECTIONS
NO SCALE

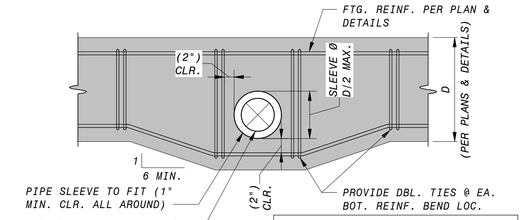

DO NOT LOCATE PENETRATIONS W/N 24" OF ANY HOLDOWNS OR ANCHOR BOLTS

ALL PENETRATIONS SHALL BE COORDINATED W/ EOR PRIOR TO CONCRETE POUR.

TIES:
SIZE, SHAPE AND SPACING PER PLAN & DETAILS. SEE BELOW IF NO TIES ARE INDICATED.
FTG. REINF. = (1) BAR T&B, USE #3 VERT. W/ 180° HOOK EA. END
FTG. REINF. > (1) BAR T&B, USE #3 STIRRUP W/ 135° HOOKS @ TOP

8 TYP. DUCT THROUGH FDN.
NO SCALE

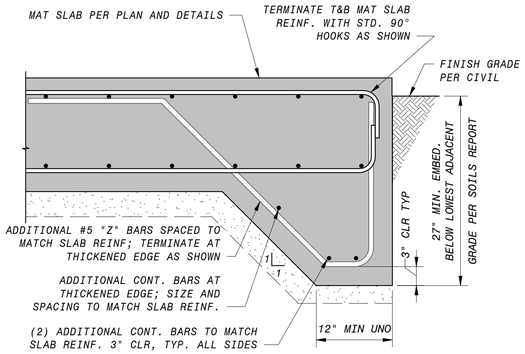

13 TYP THICKENED MAT SLAB EDGE
NO SCALE

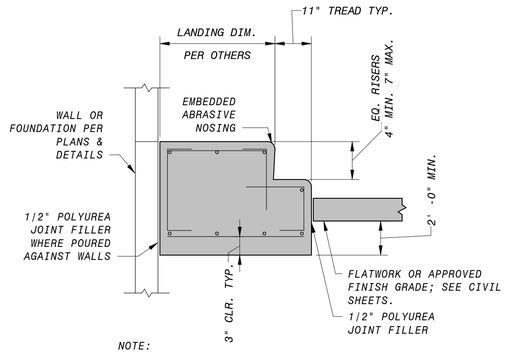

NOTE:
REINFORCE WITH #5 @12", UNLESS NOTED OTHERWISE

9 CONCRETE STAIR - ON GRADE
NO SCALE

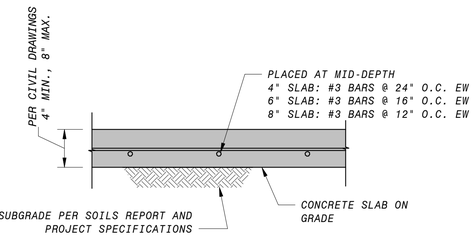

REFER TO SOILS REPORT FOR ADDITIONAL REQUIREMENTS & RECOMMENDATIONS

THE SOIL BENEATH THE SAND & VISQUEEN BARRIER SHALL BE PREMOISTENED TO A MINIMUM DEPTH AND % OF OPTIMUM MOISTURE CONTENT SPECIFIED BY THE SOIL ENGINEER, WHO SHALL TEST AND APPROVE PRIOR TO SLAB CONSTRUCTION.

4 TYP CONCRETE STOOP
NO SCALE

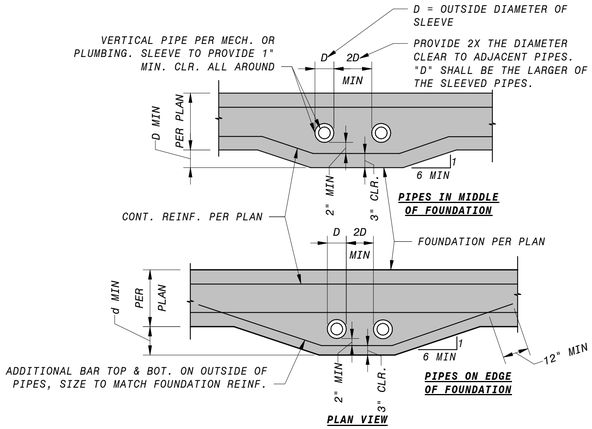

5 TYPICAL VERTICAL PIPES IN FND.
NO SCALE

REFER TO SOILS REPORT FOR ADDITIONAL REQUIREMENTS & RECOMMENDATIONS. ALL SPLICES IN MAT SLAB FOUNDATION TO BE CLASS B.
VAPOR RETARDER AT INTERIOR LOCATIONS ONLY

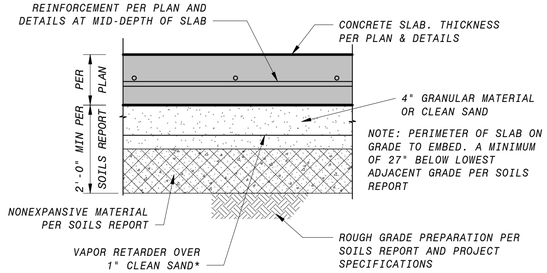

THE SOIL BENEATH SAND & VAPOR RETARDER SHALL BE PREMOISTENED TO A MINIMUM DEPTH AND % OF OPTIMUM MOISTURE CONTENT SPECIFIED BY THE SOIL ENGINEER, WHO SHALL TEST AND APPROVE PRIOR TO SLAB CONSTRUCTION.

*IF CLASS "A" VAPOR RETARDER IS USED, 1" PROTECTIVE SAND LAYER BELOW MAY BE OMITTED.

1 TYP. SLAB ON GRADE
NO SCALE

REFER TO SOILS REPORT FOR ADDITIONAL REQUIREMENTS & RECOMMENDATIONS. ALL SPLICES IN MAT SLAB FOUNDATION TO BE CLASS B.
VAPOR RETARDER AT INTERIOR LOCATIONS ONLY

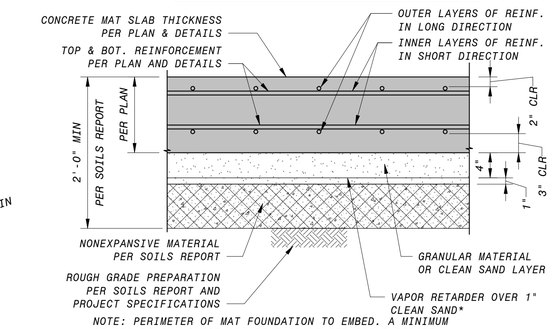

THE SOIL BENEATH SAND & VAPOR RETARDER SHALL BE PREMOISTENED TO A MINIMUM DEPTH AND % OF OPTIMUM MOISTURE CONTENT SPECIFIED BY THE SOIL ENGINEER, WHO SHALL TEST AND APPROVE PRIOR TO SLAB CONSTRUCTION.

*IF CLASS "A" VAPOR RETARDER IS USED, 1" PROTECTIVE SAND LAYER BELOW MAY BE OMITTED.

2 TYP. MAT SLAB ON GRADE
NO SCALE

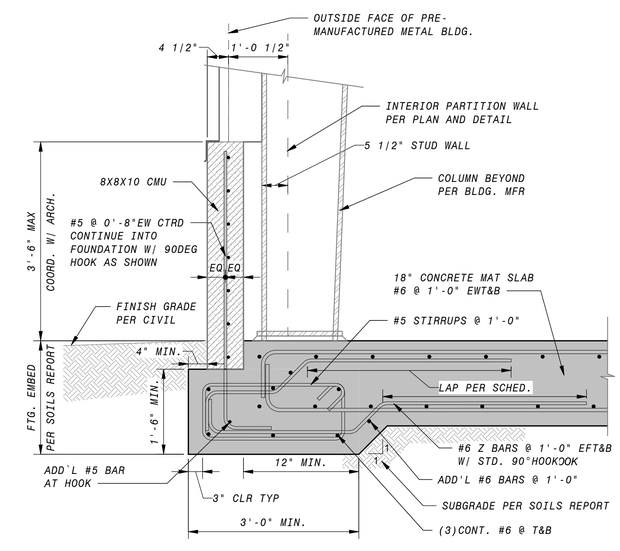

11 TYP. EOS DETAIL
95-S-301 3/4" = 1'-0"

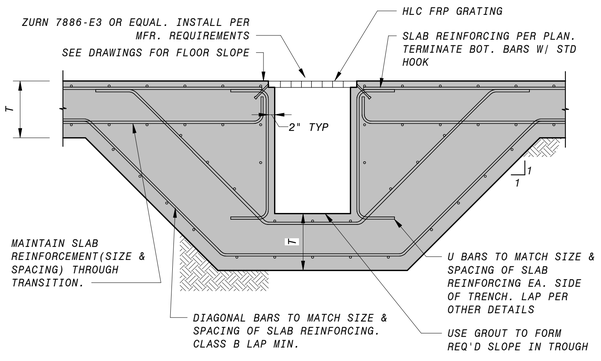

10 DRAIN TROUGH AT MAT SLAB
NO SCALE

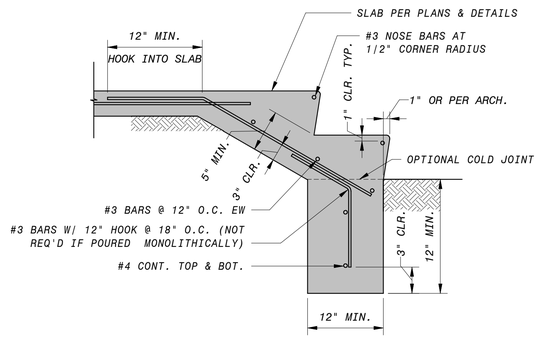

6 CONCRETE STAIR AT LANDING EDGE
NO SCALE

60% SUBMITTAL - NOT FOR CONSTRUCTION

NO.	BY	CHK	APP	DATE	REVISIONS AND RECORD OF USE

Ashley & Vance ENGINEERING, INC
JOINT VENTURE
FILANC
BLACK & VEATCH

CITY OF MORRO BAY
FILANC BLACK & VEATCH DB PROPOSAL
WATER RECLAMATION FACILITY (WRF)

STANDARD DETAILS 2
STRUCTURAL

DESIGNED: I. Shoebridge
DETAILED: S. Benjamin
CHECKED: Checker
APPROVED: Approver
DATE: XX/XX/XXXX

0 1/2 1
IF THIS BAR DOES NOT MEASURE 1" THEN DRAWING IS NOT TO FULL SCALE

PROJECT NO. 400530

00-S-102
SHEET OF XXX

PLOTTED: 7/29/2019 7:05:55 PM
D400530

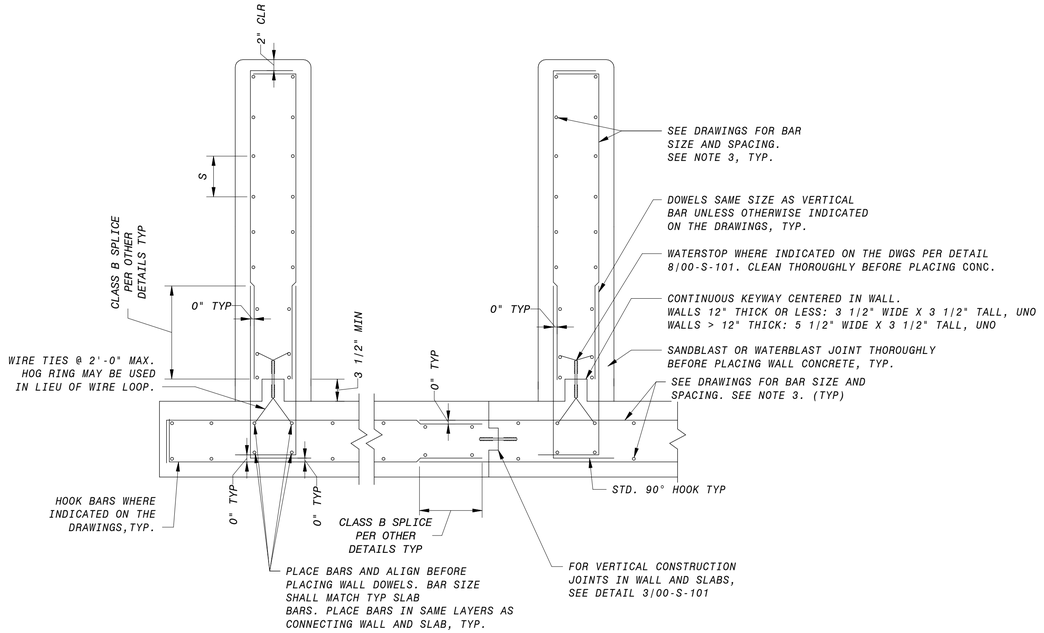

NOTES:
1. "S" = BAR SPACING INDICATED ON THE DRAWINGS.
2. HOOKS SHALL BE ACI STD 90 DEGREE HOOKS.
3. ORIENTATION OF BARS IN LAYERS SHALL BE AS INDICATED ON THE DRAWINGS.

2 WALL AND SLAB JOINTS WITH WATERSTOP

NO SCALE

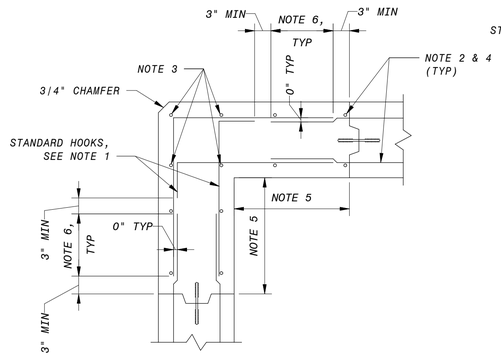

A DETAIL - CORNER FOR DOUBLE MAT

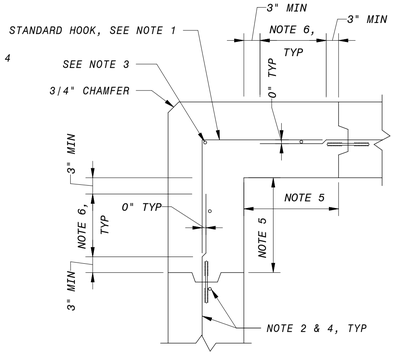

B DETAIL - CORNER FOR SINGLE MAT

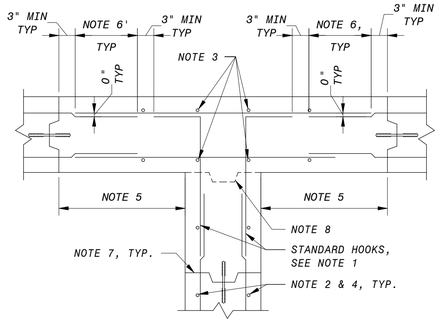

C DETAIL - INTERSECTION FOR DOUBLE MAT

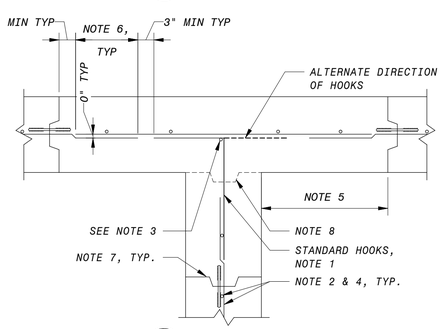

D DETAIL - INTERSECTION FOR SINGLE MAT

NOTES:
1. HOOKS SHALL BE ACI STANDARD 90-DEGREE HOOKS.
2. ORIENTATION OF BAR LAYERS SHALL BE AS INDICATED ON THE DRAWINGS.
3. BAR SIZE SHALL MATCH LARGEST BARS IN CONNECTING WALL. PLACE BAR IN SAME LAYERS AS CONNECTING WALLS. (TYP)
4. SEE DRAWINGS FOR BAR SIZE AND SPACING.
5. DISTANCE FROM INSIDE CORNER FACE TO NEAREST VERTICAL CONSTRUCTION JOINT. DIMENSION AS DENOTED IN DETAIL WITH 6" MIN AND 30'-0" MAX FOR LIQUID CONTAINING STRUCTURES OR 40'-0" MAX IN OTHER STRUCTURES. AT "T" INTERSECTIONS WHERE A WATERSTOP IS NOT REQUIRED THIS DIMENSION MAY BE ZERO.
6. OPTIONAL SPLICE LOCATION UNO. CLASS B LAP SPLICE PER OTHER DETAILS, MIN.
7. VERTICAL CONSTRUCTION JOINT NEAREST WALL CORNER WITH WATERSTOP AS REQUIRED AT ALL LIQUID CONTAINING STRUCTURES.
8. ALTERNATE VERTICAL CONSTRUCTION JOINT AT "T" INTERSECTIONS WHERE WATERSTOP ARE NOT REQUIRED.

1 WALL REINFORCEMENT AT CORNERS AND INTERSECTIONS

NO SCALE

60% SUBMITTAL - NOT FOR CONSTRUCTION

DATE	REVISIONS AND RECORD OF USE	NO.	BY	CHK	APP

Ashley & Vance ENGINEERING, INC
JOINT VENTURE
BLACK & VEATCH
FILANC

CITY OF MORRO BAY
FILANC BLACK & VEATCH DB PROPOSAL
WATER RECLAMATION FACILITY (WRF)

STANDARD DETAILS 3

DESIGNED: I. SHOEBRIDGE
DETAILED: S. BENJAMIN
CHECKED: Checker
APPROVED: Approver
DATE: XX/XX/XXXX

0 1/2 1
IF THIS BAR DOES NOT MEASURE 1" THEN DRAWING IS NOT TO FULL SCALE

PROJECT NO. 400530

00-S-103
SHEET OF XXX

PLOTTED: 7/29/2019 7:05:56 PM
D400530

ALL RAILINGS TO BE SIDE MOUNT, UNO. SEE DETAIL 2/00-S-104 FOR TOP MOUNT ANCHORAGE.

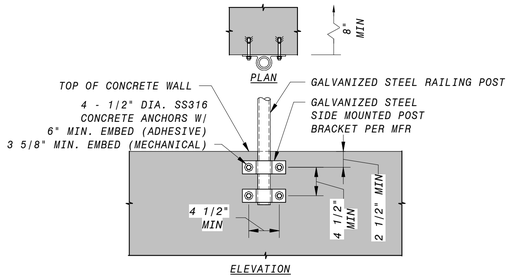

NOTES:
1. DO NOT CUT REINFORCING WITHOUT PRIOR CONSENT FROM EOR
2. ANCHORAGE TO 4000 PSI MIN CONCRETE 2-1/2" MIN EDGE DISTANCE TO ANCHOR.
3. PROVIDE PROTECTION FOR DISSIMILAR METALS AND CONCRETE PER SPECIFICATION
4. CONCRETE ANCHOR SIZE AND EMBEDMENTS CALCULATED FOR HILTI ADHESIVES, RE-500-V3, AND HILTI MECHANICAL ANCHORS KBTZ. IF ALTERNATIVE ANCHOR SYSTEM IS USED, SUBMIT STAMPED CALCULATIONS AND DRAWINGS.
5. CARE TO BE TAKEN NOT TO HIT (E) REINF.
6. USE SIDE MOUNTED POST BRACKET AS A TEMPLATE FOR THE ANCHOR BOLTS

6 RAILING POST ANCHORAGE - CONCRETE SIDE MOUNT - GALVANIZED STEEL

NO SCALE

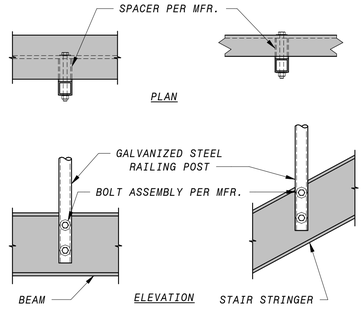

NOTE:
1. PROVIDE PROTECTION FOR DISSIMILAR METALS AND CONCRETE PER SPECIFICATIONS
2. RAILING DESIGN SHALL BE PER MANUFACTURER AND SHALL MEET THE LATEST OSHA AND CBC REQUIREMENTS.

7 RAILING POST ANCHORAGE - STEEL SIDE MOUNT - GALVANIZED STEEL

NO SCALE

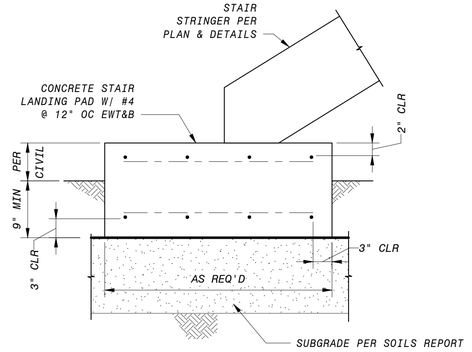

4 CONCRETE STAIR LANDING

NO SCALE

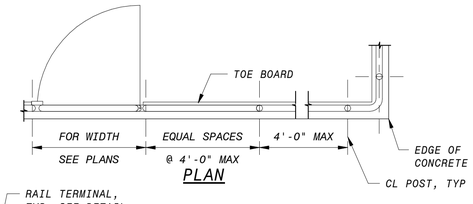

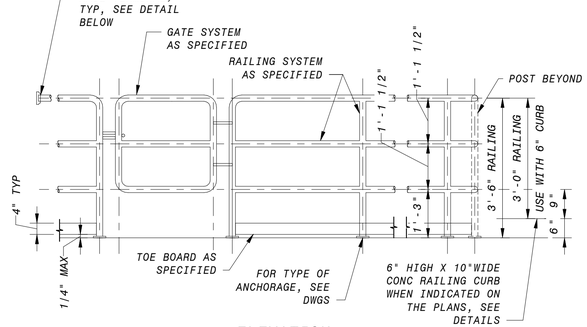

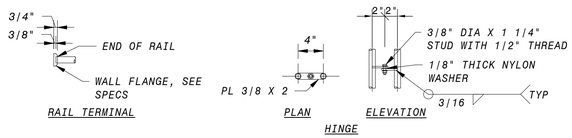

NOTES:
1. FASTEN RAIL TO WALL FLANGE PER MANUFACTURER'S RECOMMENDATIONS.
2. WALL FLANGE TO BE MOUNTED TO WALL WITH (2) 3/8" DIA SS316 WEDGE ANCHORS.
3. AT DESIGN BUILDER'S OPTION, FABRICATE HINGES OR PROVIDE OTHER HINGES AS SPECIFIED.
4. RAILING DESIGN SHALL BE PER MANUFACTURER AND SHALL MEET THE LATEST OSHA AND CBC REQUIREMENTS.

5 RAILING - 3 RAIL GALVANIZED STEEL

NO SCALE

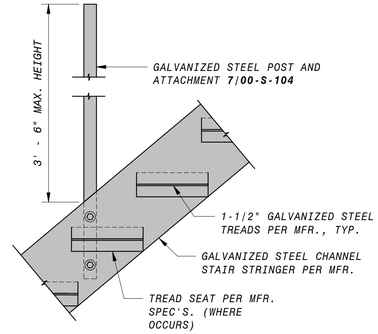

NOTES:
1. STAIR RISER HEIGHT: 4" MIN., 7" MAX. STAIR TREAD DEPTH: 11" MIN. DESIGN-BUILDER TO COORDINATE TREAD RISE/RUN WITH PROPOSED ELEVATIONS AND FIELD CONDITIONS. CORROSION PROTECTION REQUIRED AT DISSIMILAR METALS.
2. GALVANIZED STEEL MFR. TO PROVIDE DETAILED DESIGN AND STANDARDCONNECTION DETAILS. CONNECTION DESIGN SHALL EXCEED THE ULTIMATE CAPACITY OF GALVANIZED STEEL STRINGER.
3. ALL APPLICABLE FACTORS OF SAFETY SHALL BE INCLUDED.

1 TYPICAL STAIR TREADS

NO SCALE

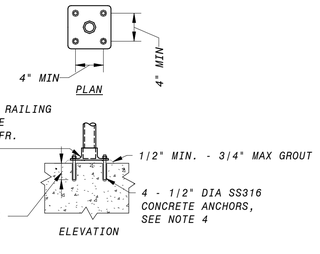

NOTES:
1. DO NOT CUT REINFORCING WITHOUT PRIOR CONSENT FROM ENGINEER
2. ANCHORAGE TO 4000 PSI CONCRETE CURB. 3" MINIMUM EDGE DISTANCE TO ANCHOR
3. PROVIDE PROTECTION FOR DISSIMILAR METALS AND CONCRETE PER SPECIFICATIONS
4. CONCRETE ANCHOR SIZE AND EMBEDMENTS CALCULATED FOR HILTI ADHESIVES, RE-500-V3, AND HILTI MECHANICAL ANCHORS KBTZ. IF ALTERNATIVE ANCHOR SYSTEM IS USED, DESIGN-BUILDER TO SUBMIT STAMPED CALCULATIONS AND DRAWINGS
5. CARE TO BE TAKEN NOT TO HIT (E) REINF.

2 RAILING POST ANCHORAGE - TOP MOUNT GALVANIZED STEEL

NO SCALE

NOTES:
1. GALVANIZED STEEL MFR. TO PROVIDE DETAILED DESIGN AND STANDARD CONNECTION DETAILS. CONNECTION DESIGN SHALL EXCEED THE ULTIMATE CAPACITY OF GALVANIZED STEEL STRINGER. ALL APPLICABLE FACTORS OF SAFETY SHALL BE INCLUDED.

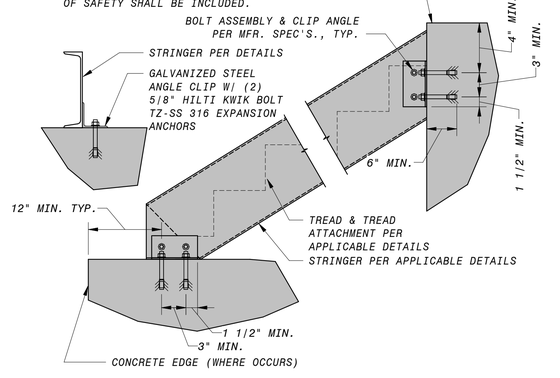

3 STRINGER TO CONCRETE

NO SCALE

60% SUBMITTAL - NOT FOR CONSTRUCTION

NO.	BY	CHK	APP	DATE	REVISIONS AND RECORD OF USE

Ashley & Vance ENGINEERING, INC
JOINT VENTURE
BLACK & VEATCH
FILANC

CITY OF MORRO BAY
FILANC BLACK & VEATCH DB PROPOSAL
WATER RECLAMATION FACILITY (WRF)

STANDARD DETAILS 4
STRUCTURAL

DESIGNED: Designer
DETAILED: Author
CHECKED: Checker
APPROVED: Approver
DATE: XX/XX/XXXX

0 1/2 1
IF THIS BAR DOES NOT MEASURE 1" THEN DRAWING IS NOT TO FULL SCALE

PROJECT NO. 400530

00-S-104
SHEET OF XXX

PLOTTED: 7/29/2019 7:05:57 PM
D400530

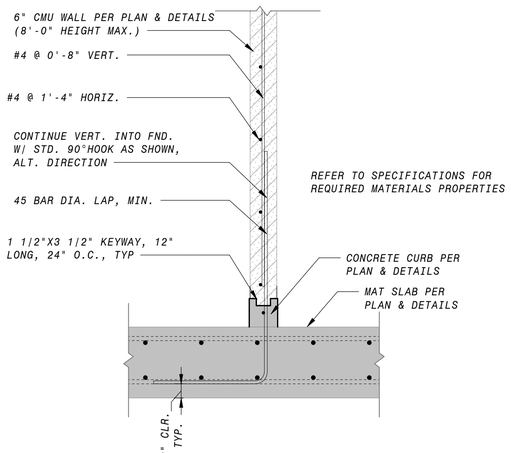

6 CMU SEPARATION WALL

NO SCALE

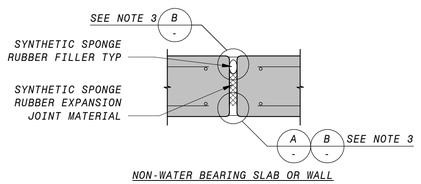

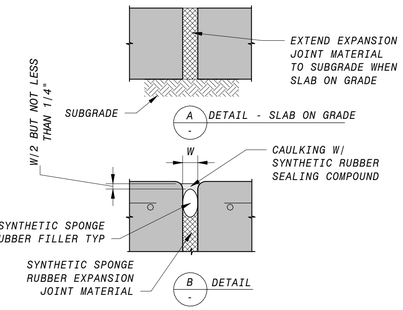

NOTES:
1. FOR WALLS AND EXPOSED SLABS EDGES, FORN ALL JOINT EDGES AT 1/4" CHAMFER.
2. "W" = 1" UNLESS OTHERWISE INDICATED ON THE DRAWINGS. MIN JOINT WIDTH = 3/8".
3. USE DETAIL "A" AT UNDERSIDE OF SLABS ON GRADE ONLY. USE DETAIL "B" AT ALL OTHER LOCATIONS.

5 EXPANSION JOINT

NO SCALE

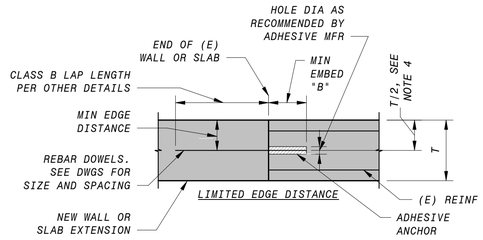

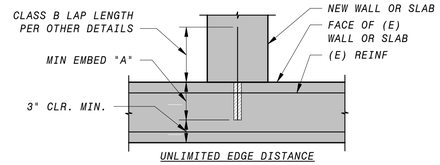

DOWEL SIZE	MIN EDGE DISTANCE	MIN EMBED A	MIN EMBED B
#3	2 5/8"	5 1/4"	8 1/4"
#4	3 1/2"	7"	11"
#5	4 3/8"	8 3/4"	13 3/4"
#6	5 1/4"	10 1/2"	16 1/2"
#7	6 1/8"	12 1/4"	19 1/4"
#8	7"	14"	22"
#9	7 7/8"	15 3/4"	24 3/4"

NOTE:
1. SPECIAL INSPECTION REQUIRED IN ACCORDANCE WITH THE CURRENT EDITION OF THE CALIFORNIA BUILDING CODE AND PRODUCT ESR REPORT.
2. FOLLOW ADHESIVE MANUFACTURER'S INSTRUCTIONS & ESR REPORT FOR INSTALLATION.
3. USE MINIMUM EMBEDMENTS SHOWN, EXCEPT USE MANUFACTURER'S MINIMUM RECOMMENDED EMBEDMENT IF GREATER.
4. LOCATE DOWELS CENTERED IN WALL OR SLAB UNLESS OTHERWISE NOTED ON DRAWINGS. WHERE 2 ROWS OF DOWELS INDICATED, STAGGER SPACING & LOCATE ALTERNATING DOWELS AT MINIMUM EDGE DISTANCE FROM OPPOSITE FACES.
5. CARE SHALL BE TAKEN TO AVOID EXISTING REINFORCEMENT.
6. COORDINATE WITH DESIGN-BUILDER PRIOR TO DOWELING. EDGE DISTANCE AND EMBEDMENT MAY VARY DEPENDING ON CONDITION.
7. ADHESIVE MAY BE HILTI HIT-RE 500 V3 OR SIMPSON SET-3G.
8. CONFORM TO THE REQUIREMENTS OF SPECIFICATION SECTION 03215, DOWELING FOR CONCRETE.

3 ADHESIVE DOWELS

NO SCALE

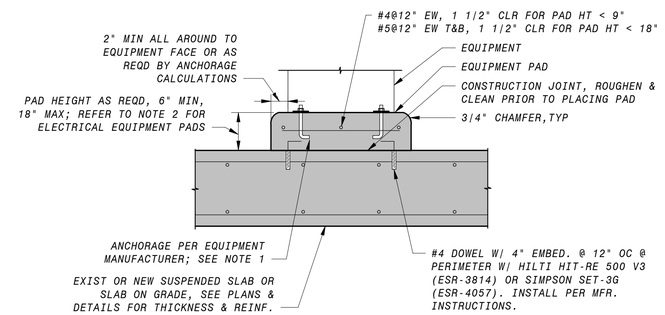

NOTES:
1. EQUIPMENT MANUFACTURER TO PROVIDE ANCHORAGE DESIGN INTO EQUIPMENT PAD AS SHOWN. INSTALL PER MANUFACTURER RECOMMENDATIONS. ALL POST-INSTALLED ANCHOR TO BE DESIGNED WITH HILTI HIT-RE 500 V3 OR SIMPSON SET-3G EPOXY, INSTALLED PER MANUFACTURER SPECIFICATIONS. ALL ANCHORS ARE TO BE 316 STAINLESS STEEL THREADED ROD OR 316 STAINLESS STEEL EXPANSION ANCHORS.
2. CONCRETE PADS FOR ELECTRICAL EQUIPMENT SHALL BE 4" HIGH, UNLESS NOTED OTHERWISE.
3. PAD SIZE SHALL BE MINIMUM INDICATED OR AS SHOWN ON THE PLANS OR AS INDICATED BY THE MANUFACTURER AND APPROVED BY THE DESIGN-BUILDER.
4. THE SIZE, NUMBER, TYPE, LOCATION, AND THREAD PROJECTION OF THE ANCHOR BOLTS SHALL BE DETERMINED BY THE EQUIPMENT MANUFACTURER. ANCHOR BOLTS SHALL BE HELD IN POSITION WITH A TEMPLATE OR OTHER ACCEPTABLE MEANS, MATCHING THE BASE PLATE, WHILE PAD IS BEING PLACED.
5. EQUIPMENT BASES SHALL BE INSTALLED LEVEL UNLESS INDICATED OTHERWISE
6. WEDGES, SHIMS, OR LEVELING NUTS SHALL BE USED TO SUPPORT THE BASE WHILE THE NON-SHRINK GROUT IS PLACED. WEDGES OR SHIMS THAT ARE LEFT IN PLACE SHALL NOT BE EXPOSED TO VIEW.
7. WHERE EQUIPMENT OR PIPING ELEVATION REQUIRE A PAD HEIGHT LESS THAN THE MINIMUM SHOWN, CONSULT WITH DESIGN-BUILDER.
8. 1 1/2" MAX., HIGH-STRENGTH, NON-SHRINK GROUT (WHERE REQUIRED) IS PERMITTED.

1 TYP CONCRETE EQUIPMENT PAD

NO SCALE

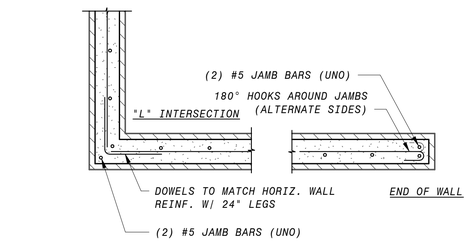

8 TYP CMU WALL INTERSECTIONS

NO SCALE

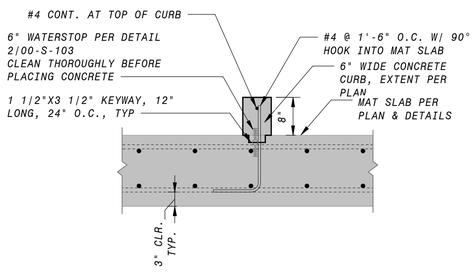

7 CONCRETE CURB AT MAT SLAB

NO SCALE

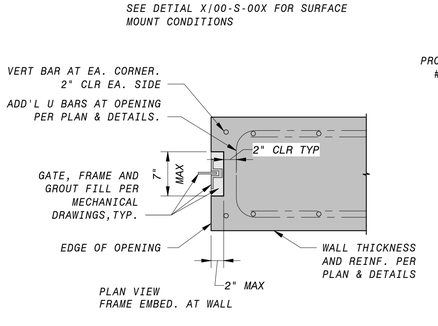

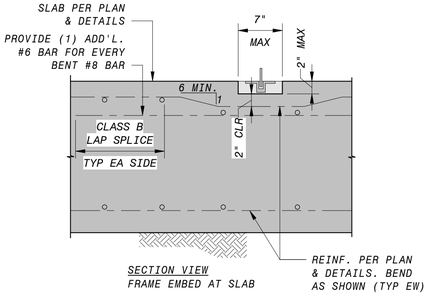

4 EMBEDDED GATE FRAME DETAILS

NO SCALE

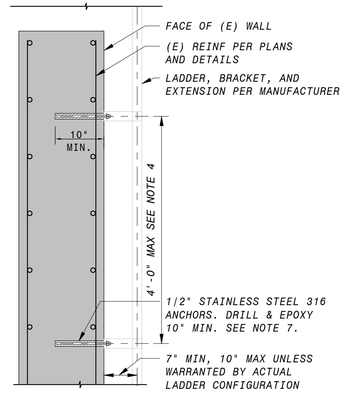

NOTE:
1. SPECIAL INSPECTION REQUIRED IN ACCORDANCE WITH THE CURRENT EDITION OF THE CALIFORNIA BUILDING CODE AND PRODUCTS ESR REPORT.
2. FOLLOW ADHESIVE MANUFACTURER'S INSTRUCTIONS & ESR REPORT FOR INSTALLATION.
3. USE MINIMUM EMBEDMENTS SHOWN, EXCEPT USE MANUFACTURER'S MINIMUM RECOMMENDED EMBEDMENT IF GREATER.
4. IF LADDER CONFIGURATION REQUIRES A GREATER DISTANCE BETWEEN SUPPORTS THAN INDICATED ON TYPICAL DETAILS, THE LADDER SUPPLIER SHALL DESIGN THE LADDER, LADDER BRACKET, AND LADDER BRACKET CONNECTIONS FOR THE INDICATED SPAN IN ACCORDANCE WITH NOTE 6 BELOW.
5. CARE SHALL BE TAKEN TO AVOID EXISTING REINFORCEMENT.
6. ALL LADDERS SHALL BE DESIGNED AND FABRICATED BY LADDER SUPPLIER IN CONFORMANCE WITH THE LATEST ISSUE OF OASHA/ANSI A14.3, SECTION 1910.27 APPLICABLE BUILDING CODE STANDARDS FOR FIXED WALL LADDERS, AND REQUIREMENTS OF THE CONTRACT DRAWINGS AND SPECIFICATIONS. GENERAL CONFIGURATION AND DETAILS SHALL CONFORM WITH THIS DRAWING. ALL LADDERS TO BE GALVANIZED, UNO.
7. ADHESIVE MAY BE HILTI HIT-RE 500 V3 OR SIMPSON SET-3G.
8. CONFORM TO THE REQUIREMENTS OF SPECIFICATION SECTION 05 81 00, ANCHORAGE IN CONCRETE AND MASONRY.

2 LADDER ATTACHMENT

NO SCALE

60% SUBMITTAL - NOT FOR CONSTRUCTION

NO.	BY	CHK'D	APP'D	DATE	REVISIONS AND RECORD OF USE

Ashley & Vance ENGINEERING, INC
BLACK & VEATCH
JOINT VENTURE
FILANC

CITY OF MORRO BAY
FILANC BLACK & VEATCH DB PROPOSAL
WATER RECLAMATION FACILITY (WRF)

STANDARD DETAILS 5
STRUCTURAL

DESIGNED: Designer
DETAILED: Author
CHECKED: Checker
APPROVED: Approver
DATE: XX/XX/XXXX

0 1/2 1
IF THIS BAR DOES NOT MEASURE 1" THEN DRAWING IS NOT TO FULL SCALE

PROJECT NO. 400530

00-S-105
SHEET OF XXX

PLOTTED: 7/29/2019 7:05:58 PM
D400530

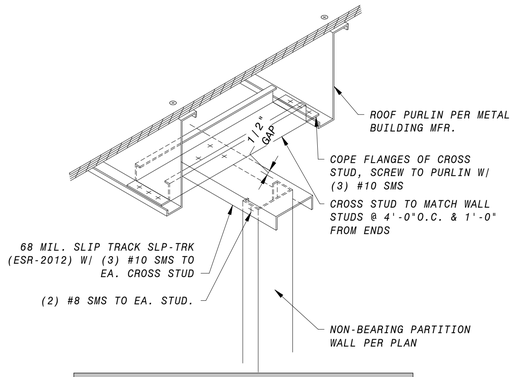

WALL SCHEDULE AT TYPICAL INTERIOR PARTITIONS				
WALL	MAX. HT.	SIZE	GRADE	SPACING
Typ Interior Wall	15'-0"	362S137-43	33 ksi	24" oc
	22'-0"	362S162-54	50 ksi	12" oc
Plumbing Wall	22'-0"	600S162-43	33 ksi	24" oc

Notes:
1. BRACING REQUIRED AT 48" OC IF NOT SHEATHED FULL HEIGHT BOTH SIDES.
2. WALL DESIGN BASED ON **5psf LATERAL LOAD** AND **L/240** DEFLECTION LIMIT.

8 TOP OF STEEL STUD WALL SUPPORT
NO SCALE

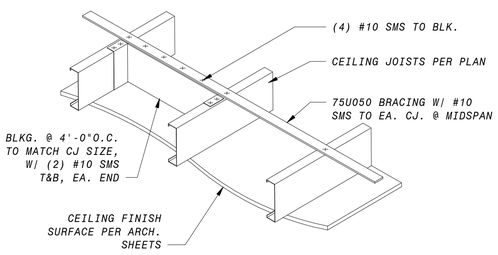

5 TYPICAL CEILING JOIST BRACING
NO SCALE

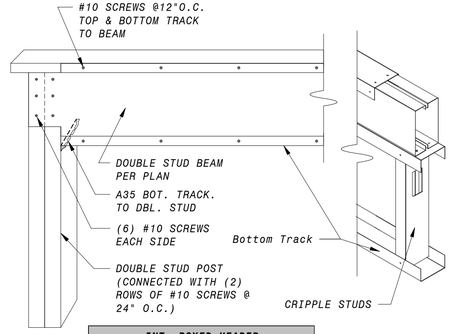

INT. BOXED HEADER SCHEDULE		
Max. Span	Size	Grade
6'-0"	(2) 550S162-43	33 ksi
10'-0"	(2) 600S162-43	33 ksi

Notes:
1. WEB STIFFENERS REQUIRED AT ENDS.

3 TYPICAL HEADER
NO SCALE

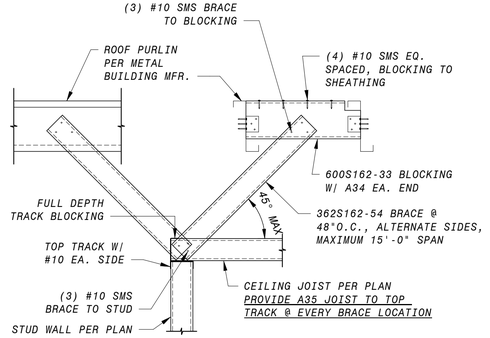

WALL SCHEDULE AT TYPICAL INTERIOR PARTITIONS				
WALL	MAX HT	SIZE	GRADE	SPACING
TYP INTERIOR WALL	15'-0"	362S137-43	33 ksi	24" OC
PLUMBING WALL	15'-0"	600S162-43	33 ksi	24" OC

NOTES:
1. BRACING REQUIRED AT 48" OC IF NOT SHEATHED FULL HEIGHT BOTH SIDES.
2. WALL DESIGN BASED ON **5psf LATERAL LOAD** AND **L/240** DEFLECTION LIMIT.

1 TOP OF WALL BRACING
NO SCALE

Note:
1. Load Bearing Studs Must Be Seated Tight To Track Web (Max. Gap Of 1/16")
2. For use with interior walls only.

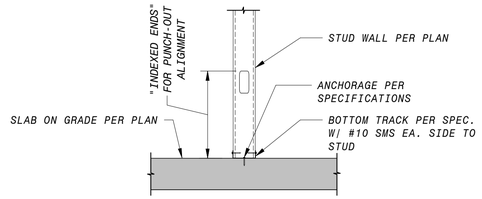

6 BOTTOM OF WALL TO SLAB ON GRADE
NO SCALE

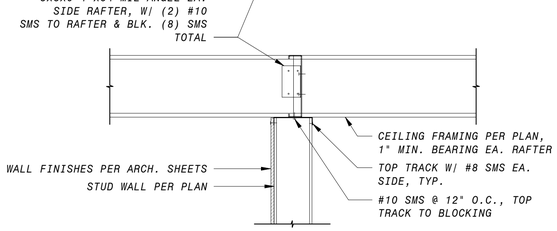

CEILING JOIST SCHEDULE (MAX SPAN, FT-IN)		
SECTION (SSMA)	Fy (ksi)	ALLOWABLE SPAN
600S162-43	33	16'-0"
1200S200-54	50	25'-0"

Notes:
1. JOIST DESIGN BASED ON **8psf TOTAL DEAD LOAD** (2 LAYER GYP WALL BOARD), **5psf LIVE LOAD** (NON-ACCESSIBLE) AND **L/240** DEFLECTION LIMIT.
2. 1" MINIMUM BEARING REQUIRED AT EACH END.
3. WEB PUNCHOUTS MAY NOT OCCUR NEAR SUPPORTS.
4. STORAGE LOADING NOT PERMITTED.
5. MAXIMUM SPANS BASED ON **24" OC SPACING**.
6. WEB STIFFENERS REQUIRED AT ENDS.
7. BRACING REQUIRED AT MIDSPAN FOR SPANS >14'

4 RAFTERS TO INTERIOR WALL
NO SCALE

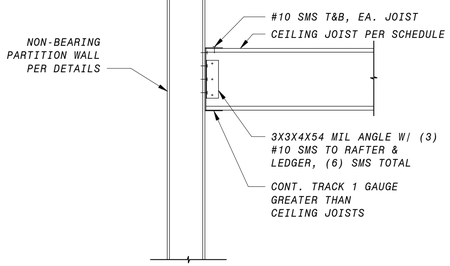

CEILING JOIST SCHEDULE (MAX SPAN, FT-IN)		
SECTION (SSMA)	Fy (ksi)	ALLOWABLE SPAN
600S162-43	33	16'-0"
1200S200-54	50	25'-0"

NOTES:
1. JOIST DESIGN BASED ON **8psf TOTAL DEAD LOAD**(2 LAYER GYP WALL BOARD), **5psf LIVE LOAD** (NON-ACCESSIBLE) AND **L/240** DEFLECTION LIMIT.
2. 1" MINIMUM BEARING REQUIRED AT EACH END.
3. WEB PUNCHOUTS MAY NOT OCCUR NEAR SUPPORTS.
4. STORAGE LOADING NOT PERMITTED.
5. MAXIMUM SPANS BASED ON **24" OC SPACING**.
6. WEB STIFFENERS REQUIRED AT ENDS.
7. BRACING REQUIRED AT MIDSPAN FOR SPANS > 14'

2 CEILING JOIST TO STUD WALL
NO SCALE

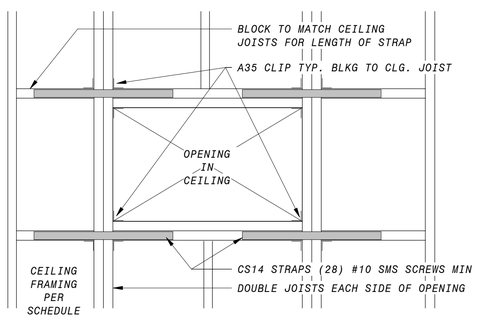

7 TYPICAL BLOCKOUT FRAMING
NO SCALE

60% SUBMITTAL - NOT FOR CONSTRUCTION

NO.	BY	CHK	APP	DATE	REVISIONS AND RECORD OF USE

Ashley & Vance ENGINEERING, INC
BLACK & VEATCH
JOINT VENTURE
FILANC

CITY OF MORRO BAY
FILANC BLACK & VEATCH DB PROPOSAL
WATER RECLAMATION FACILITY (WRF)

STANDARD DETAILS 6
STRUCTURAL

DESIGNED: I. SHOEBRIDGE
DETAILED: S. BENJAMIN
CHECKED: Checker
APPROVED: Approver
DATE: XX/XX/XXXX

0 1/2 1
IF THIS BAR DOES NOT MEASURE 1" THEN DRAWING IS NOT TO FULL SCALE

PROJECT NO. 400530

00-S-106
SHEET OF XXX

PLOTTED: 7/29/2019 7:05:59 PM
D400530

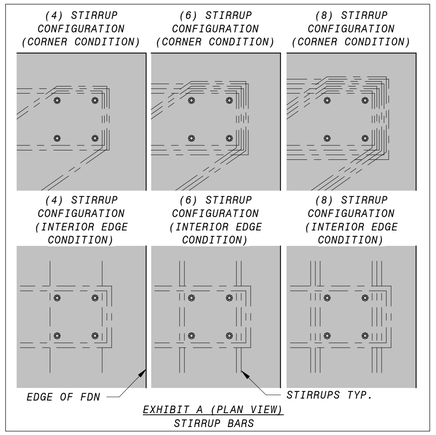

EXHIBIT A (PLAN VIEW)
STIRRUP BARS

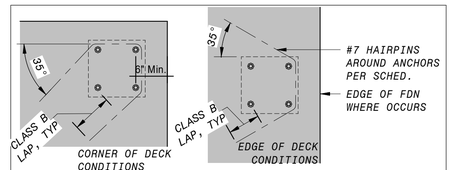

EXHIBIT B (PLAN VIEW)
HAIRPIN BARS

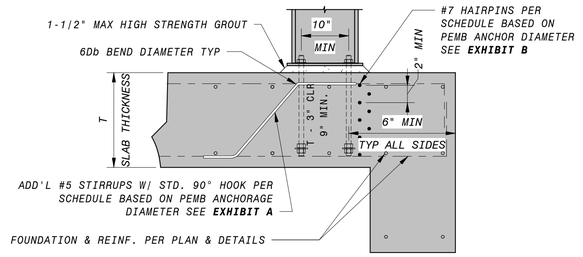

ADD'L REINFORCEMENT SCHEDULE		
ANCHOR DIAMETER	NO. OF STIRRUPS (#5)	NO. OF HAIRPINS (#7)
5/8"	4	3
3/4"	4	4
7/8"	6	5
1"	8	7

2 ADD'L REINFORCEMENT AT PEMB ANCHORAGE
95-S-101 NO SCALE

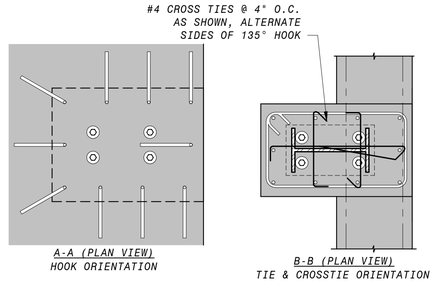

A-A (PLAN VIEW)
HOOK ORIENTATION

B-B (PLAN VIEW)
TIE & CROSSTIE ORIENTATION

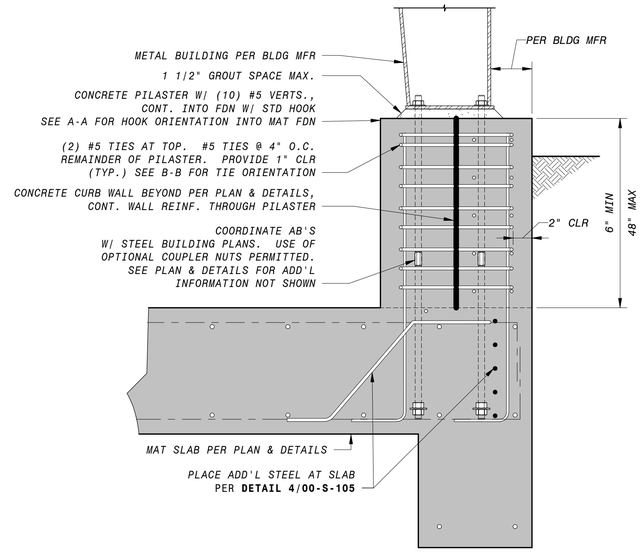

SECTION VIEW

1 STEEL FRAME AT CONCRETE PILASTER
NO SCALE

60% SUBMITTAL - NOT FOR CONSTRUCTION

NO.	BY	CHK	APP'D	DATE	REVISIONS AND RECORD OF USE

Ashley & Vance ENGINEERING, INC
BLACK & VEATCH
JOINT VENTURE
FILANC

CITY OF MORRO BAY
FILANC BLACK & VEATCH DB PROPOSAL
WATER RECLAMATION FACILITY (WRF)

STANDARD DETAILS 7
STRUCTURAL

DESIGNED: I. SHOEBRIDGE
DETAILED: S. BENJAMIN
CHECKED: Checker
APPROVED: Approver
DATE: XX/XX/XXXX

0 1/2 1
IF THIS BAR DOES NOT MEASURE 1" THEN DRAWING IS NOT TO FULL SCALE

PROJECT NO.
400530

00-S-107
SHEET
OF XXX

PLOTTED: 7/29/2019 7:05:59 PM
D400530

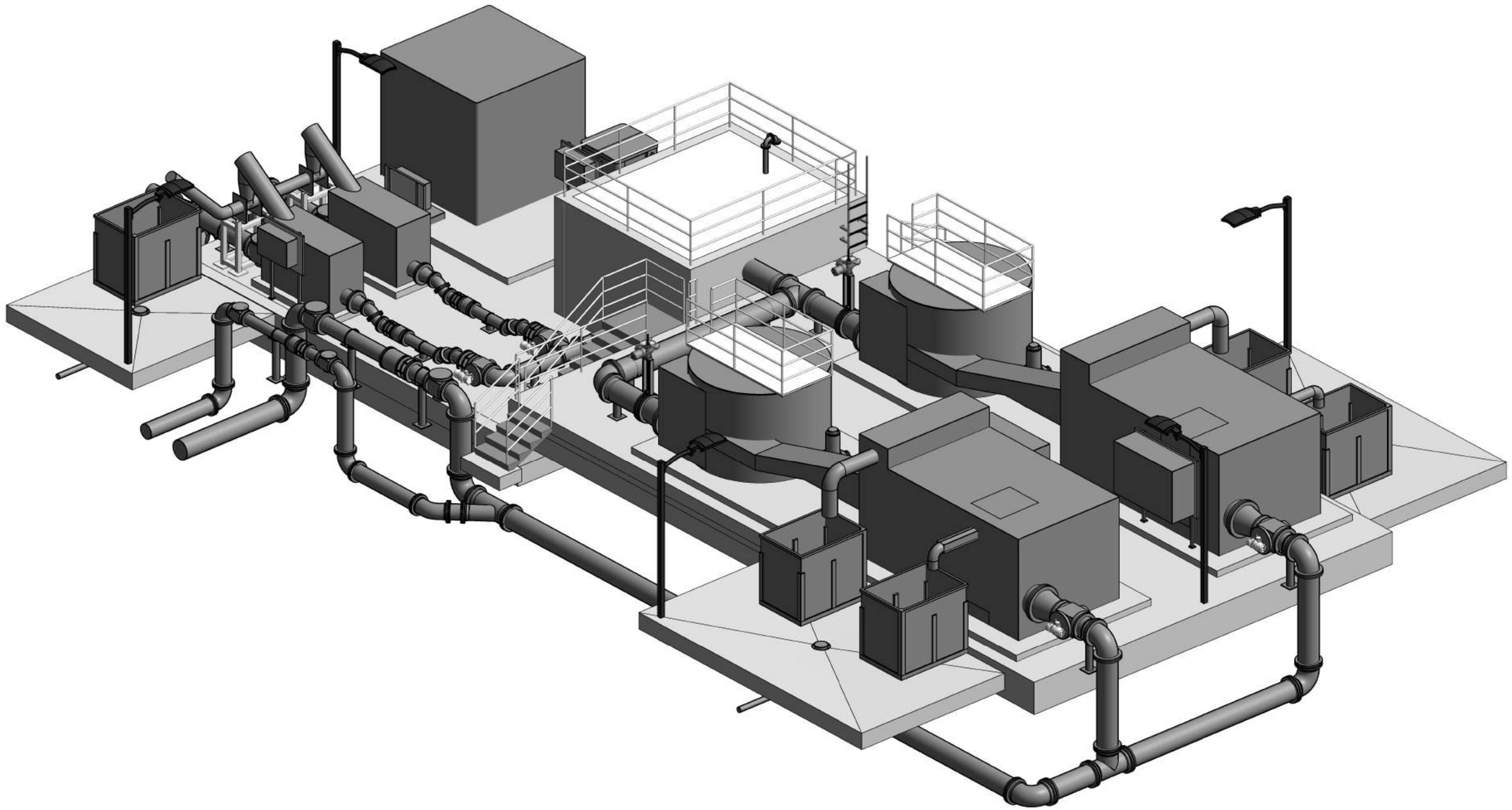

3D VIEW

60% SUBMITTAL - NOT FOR CONSTRUCTION

DATE	REVISIONS AND RECORD OF USE	NO.	BY	CHK	APP

Ashley & Vance ENGINEERING, INC

JOINT VENTURE

BLACK & VEATCH

FILANC

CITY OF MORRO BAY
FILANC BLACK & VEATCH DB PROPOSAL
RECLAMATION FACILITY (WRF)

HEADWORKS AREA
STRUCTURAL
3D VIEWS

DESIGNED: I, SHOEBRIDGE
DETAILED: S. BENJAMIN
CHECKED: Checker
APPROVED: Approver
DATE:

0 1/2 1

IF THIS BAR DOES NOT MEASURE 1" THEN DRAWING IS NOT TO FULL SCALE

PROJECT NO.
400530

20-S-001
SHEET
OF

PLOTTED: 7/29/2019 4:44:16 PM
D400530

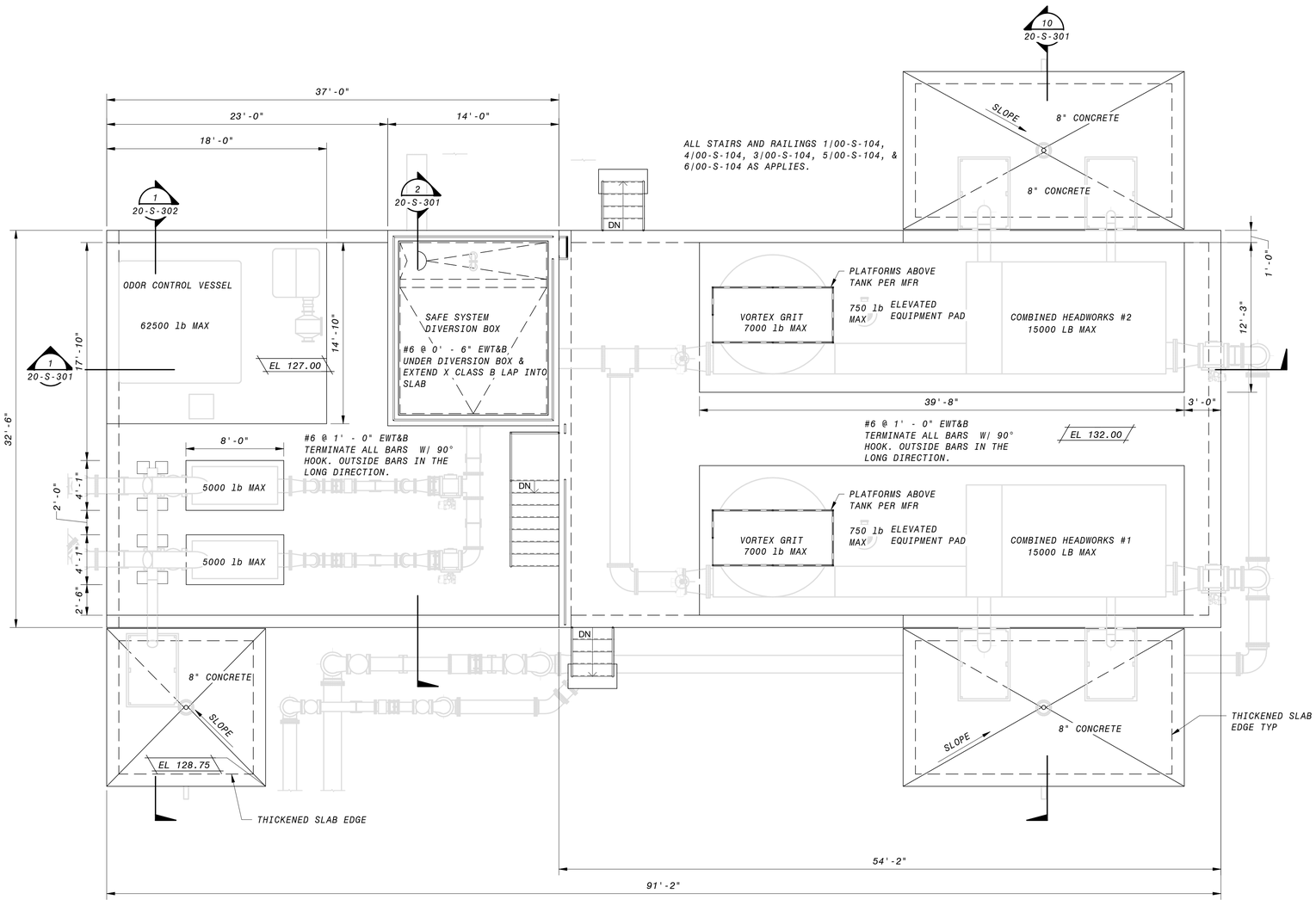

FLOOR PLAN

3/16" = 1'-0"

GENERAL NOTES

1. PLEASE SEE SOILS REPORT FOR ADDITIONAL SPECIFICATIONS AND RECOMMENDATIONS. IT IS THE DESIGN-BUILDER'S RESPONSIBILITY TO OBTAIN A COPY OF THE SOILS REPORT FROM THE OWNER OR OWNERS REPRESENTATIVE.
2. SEE GENERAL NOTES & SPECIFICATIONS FOR ADDITIONAL REQUIRMENTS AND MATERIAL SPECIFICATIONS.
3. VERIFY ALL DIMENSIONS PRIOR TO COMMENCEMENT OF CONSTRUCTION.
4. ALL LAP SPLICES TO BE CLASS B PER DETAIL 1/00-S-004
5. SUBMIT EQUIPMENT WEIGHT FOR REVIEW PRIOR TO INSTALLATION. SEE DETAIL 1/00-S-008 FOR TYPICAL EQUIPMENT PADS. LOCATION AND SIZE OF EQUIPMENT PADS TO BE COORDINATED WITH MECHANICAL/ELECTRICAL/PLUMBING DRAWINGS. EQUIPMENT ANCHORAGE PER PROJECT SPECIFICATIONS.
6. REFER TO MECHANICAL/ELECTRICAL/PLUMBING DRAWINGS FOR SIZE AND LOCATIONS OF PIPE PENETRATIONS AND WALL OPENINGS. SEE DETAIL 9/00-S-004 FOR TYPICAL REINFORCEMENT REQUIREMENTS. COORDINATE PIPE PENETRATION SEAL WITH MECHANICAL ENGINEER OF RECORD.

4' 2' 0' 4' 8'

1/4" = 1'-0"

60% SUBMITTAL - NOT FOR CONSTRUCTION

NO.	BY	CHK	APP	DATE	REVISIONS AND RECORD OF USE

Ashley & Vance ENGINEERING, INC
JOINT VENTURE
FILANC
BLACK & VEATCH

CITY OF MORRO BAY
FILANC BLACK & VEATCH DB PROPOSAL
RECLAMATION FACILITY (WRF)

HEADWORKS AREA
STRUCTURAL
PLAN

DESIGNED: I. SHOEBRIDGE
DETAILED: S. BENJAMIN
CHECKED: Checker
APPROVED: Approver
DATE:

0 1/2 1

IF THIS BAR DOES NOT MEASURE 1" THEN DRAWING IS NOT TO FULL SCALE

PROJECT NO.
400530

20-S-101
SHEET
OF

PLOTTED: 7/29/2019 4:44:17 PM
D400530

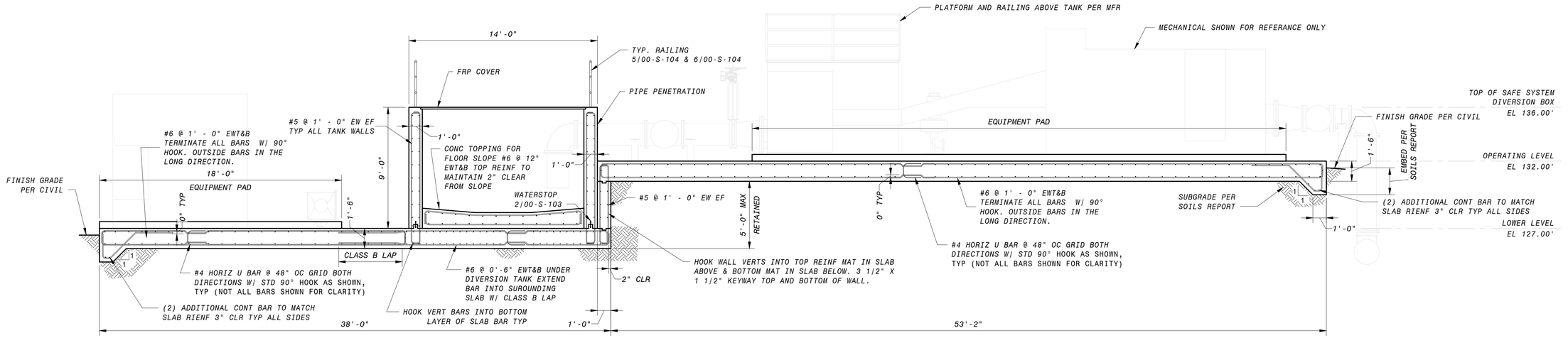

1 SECTION
20-S-101 1/4" = 1'-0"

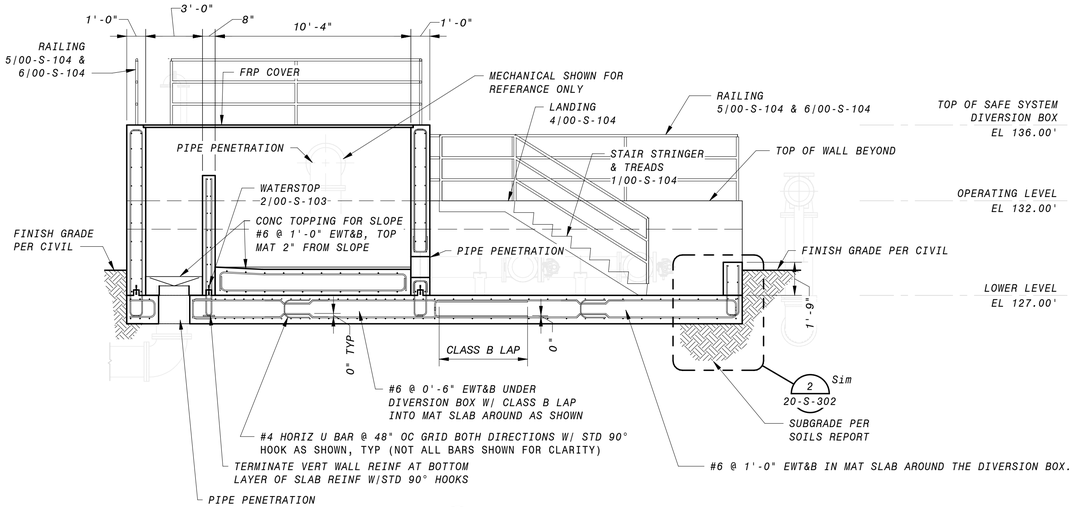

2 SECTION
20-S-101 1/4" = 1'-0"

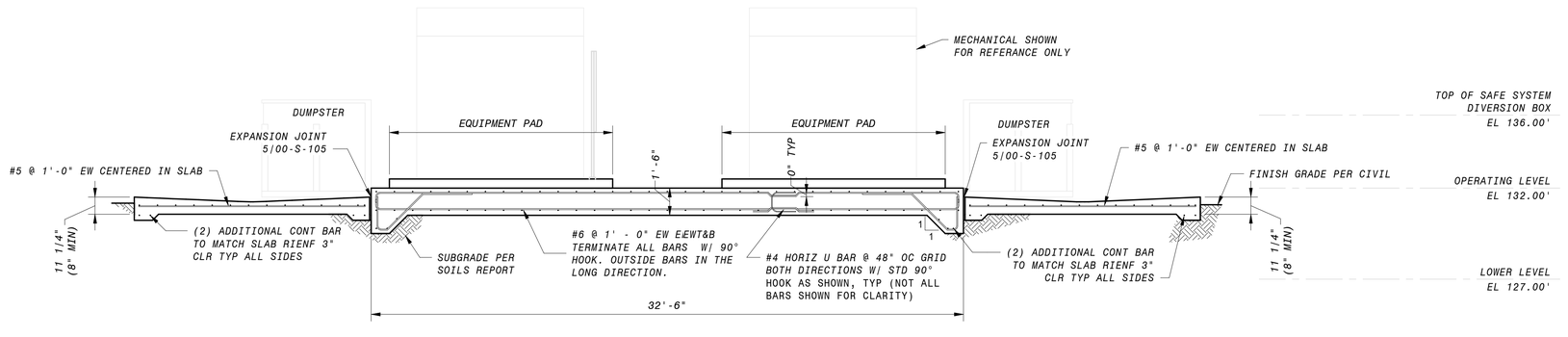

10 SECTION
20-S-101 1/4" = 1'-0"

GENERAL SECTION NOTES

1. FOR GENERAL STRUCTURAL NOTES, SEE SHEETS 00-S-002 AND STANDARD SPECIFICATIONS.
2. AT WALLS 12" THICK OR LESS, PROVIDE A 6" WATERSTOP, UNO. AT WALLS GREATER THAN 12" THICK, PROVIDE A 9" WATERSTOP, UNO. REFER TO DETAIL 2 ON SHEET 00-S-006.
3. REINFORCEMENT CLEAR COVER TO BE 2" EF FOR WALLS, 2" AT TOP OF SLABS, AND 3" AT BOTTOM OF SLABS, TYP., UNO
4. PROVIDE COMPLETE DESIGN PACKAGE FOR FRP COVER|GRATING (AND ACCESS HATCH, WHERE OCCURS) SIGNED BY A REGISTERED PROFESSIONAL ENGINEER TO THE EOR FOR REVIEW AND APPROVAL. MINIMUM DESIGN CRITERIA MUST INCLUDE: 60PSF UNIFORM DISTRIBUTED LIVE LOAD, 300LB CONCENTRATED LIVE LOAD, AND LESSER OF L/120 OR 3/8" DEFLECTION. SEE DETAIL 3/00-S-004 FOR ADDITIONAL INFORMATION AT GRATING SUPPORT.
5. ALL LAP SPLICES TO BE CLASS B PER DETAIL 1/00-S-004.
6. REFER TO MECHANICAL DRAWINGS FOR SIZE AND LOCATIONS OF PIPE PENETRATIONS AND WALL OPENINGS. SEE DETAIL 9/00-S-004 FOR TYPICAL REINFORCEMENT REQUIREMENTS. COORDINATE PIPE PENETRATION SEAL WITH EOR (WHERE OCCURS).
7. PROVIDE GATE PER MECHANICAL DRAWINGS. COORDINATE OPENING SIZE WITH EOR.
8. COORDINATE EQUIPMENT WEIGHT WITH EOR PRIOR TO INSTALLATION. SEE DETAIL 1/00-S-008 FOR TYPICAL EQUIPMENT ANCHORAGE AND EQUIPMENT PADS.

6" 4' 2' 0' 5' 10'
3/16" = 1'-0"

60% SUBMITTAL - NOT FOR CONSTRUCTION

NO.	BY	CHK	APP	DATE	REVISIONS AND RECORD OF USE

Ashley & Vance ENGINEERING, INC
JOINT VENTURE
BLACK & VEATCH
FILANC

CITY OF MORRO BAY
FILANC BLACK & VEATCH DB PROPOSAL
RECLAMATION FACILITY (WRF)

HEADWORKS AREA
STRUCTURAL
SECTIONS & DETAILS 1

DESIGNED: I, SHOEBRIDGE
DETAILED: S. BENJAMIN
CHECKED: Checker
APPROVED: Approver
DATE:

0 1/2 1
IF THIS BAR DOES NOT MEASURE 1" THEN DRAWING IS NOT TO FULL SCALE

PROJECT NO. 400530

20-S-301
SHEET OF

PLOTTED: 7/29/2019 4:44:18 PM
D400530

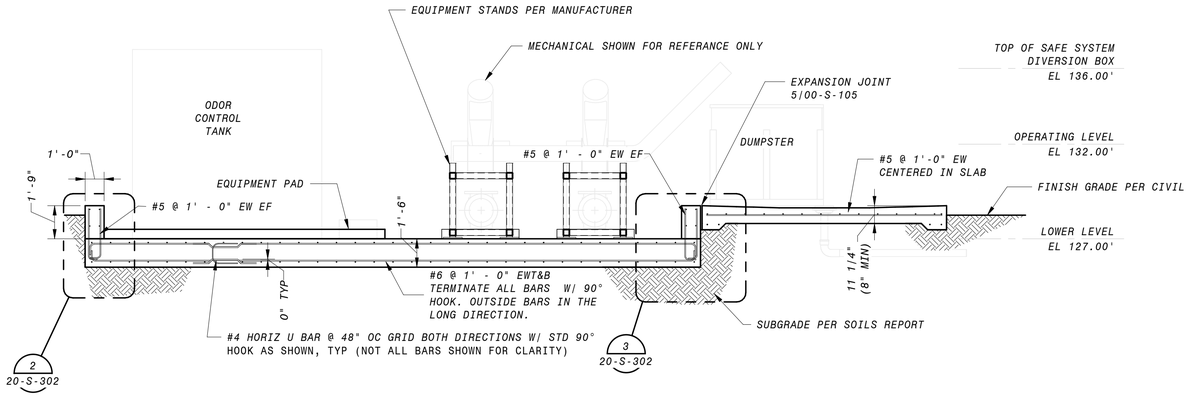

1 SECTION
20-S-101 1/4" = 1'-0"

GENERAL SECTION NOTES

1. FOR GENERAL STRUCTURAL NOTES, SEE SHEETS 00-S-002 AND STANDARD SPECIFICATIONS.
2. AT WALLS 12" THICK OR LESS, PROVIDE A 6" WATERSTOP, UNO. AT WALLS GREATER THAN 12" THICK, PROVIDE A 9" WATERSTOP, UNO. REFER TO DETAIL 2 ON SHEET 00-S-006.
3. REINFORCEMENT CLEAR COVER TO BE 2" EF FOR WALLS, 2" AT TOP OF SLABS, AND 3" AT BOTTOM OF SLABS, TYP., UNO
4. PROVIDE COMPLETE DESIGN PACKAGE FOR FRP COVER/GRATING (AND ACCESS HATCH, WHERE OCCURS) SIGNED BY A REGISTERED PROFESSIONAL ENGINEER TO THE EOR FOR REVIEW AND APPROVAL. MINIMUM DESIGN CRITERIA MUST INCLUDE: 60PSF UNIFORM DISTRIBUTED LIVE LOAD, 300LB CONCENTRATED LIVE LOAD, AND LESSER OF L/120 OR 3/8" DEFLECTION. SEE DETAIL 3/00-S-004 FOR ADDITIONAL INFORMATION AT GRATING SUPPORT.
5. ALL LAP SPLICES TO BE CLASS B PER DETAIL 1/00-S-004.
6. REFER TO MECHANICAL DRAWINGS FOR SIZE AND LOCATIONS OF PIPE PENETRATIONS AND WALL OPENINGS. SEE DETAIL 9/00-S-004 FOR TYPICAL REINFORCEMENT REQUIREMENTS. COORDINATE PIPE PENETRATION SEAL WITH EOR (WHERE OCCURS).
7. PROVIDE GATE PER MECHANICAL DRAWINGS. COORDINATE OPENING SIZE WITH EOR.
8. COORDINATE EQUIPMENT WEIGHT WITH EOR PRIOR TO INSTALLATION. SEE DETAIL 1/00-S-008 FOR TYPICAL EQUIPMENT ANCHORAGE AND EQUIPMENT PADS.

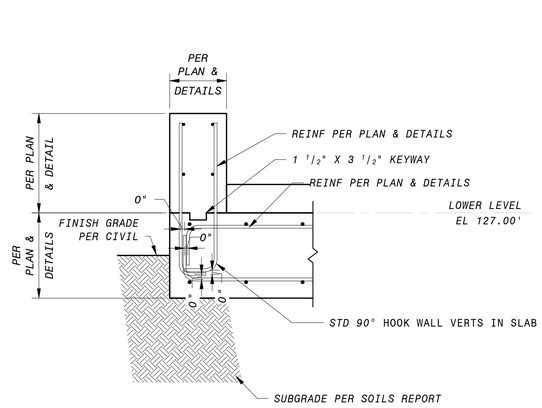

2 DETAIL 1
20-S-301 3/4" = 1'-0"

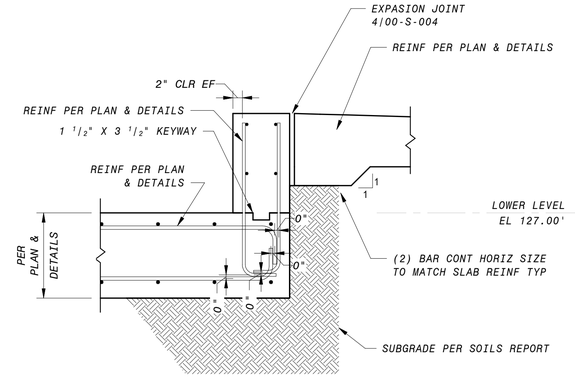

3 DETAIL 2
20-S-302 3/4" = 1'-0"

60% SUBMITTAL - NOT FOR CONSTRUCTION

NO.	BY	CHK	APP	DATE	REVISIONS AND RECORD OF USE

Ashley & Vance ENGINEERING, INC
JOINT VENTURE
BLACK & VEATCH
FILANC

CITY OF MORRO BAY
FILANC BLACK & VEATCH DB PROPOSAL
RECLAMATION FACILITY (WRF)

HEADWORKS AREA
STRUCTURAL
SECTIONS & DETAILS 2

DESIGNED: I. SHOEBRIDGE
DETAILED: S. BENJAMIN
CHECKED: Checker
APPROVED: Approver
DATE:

0 1/2 1
IF THIS BAR DOES NOT MEASURE 1" THEN DRAWING IS NOT TO FULL SCALE

PROJECT NO.
400530

20-S-302
SHEET
OF

PLOTTED: 7/29/2019 4:44:18 PM
D400530

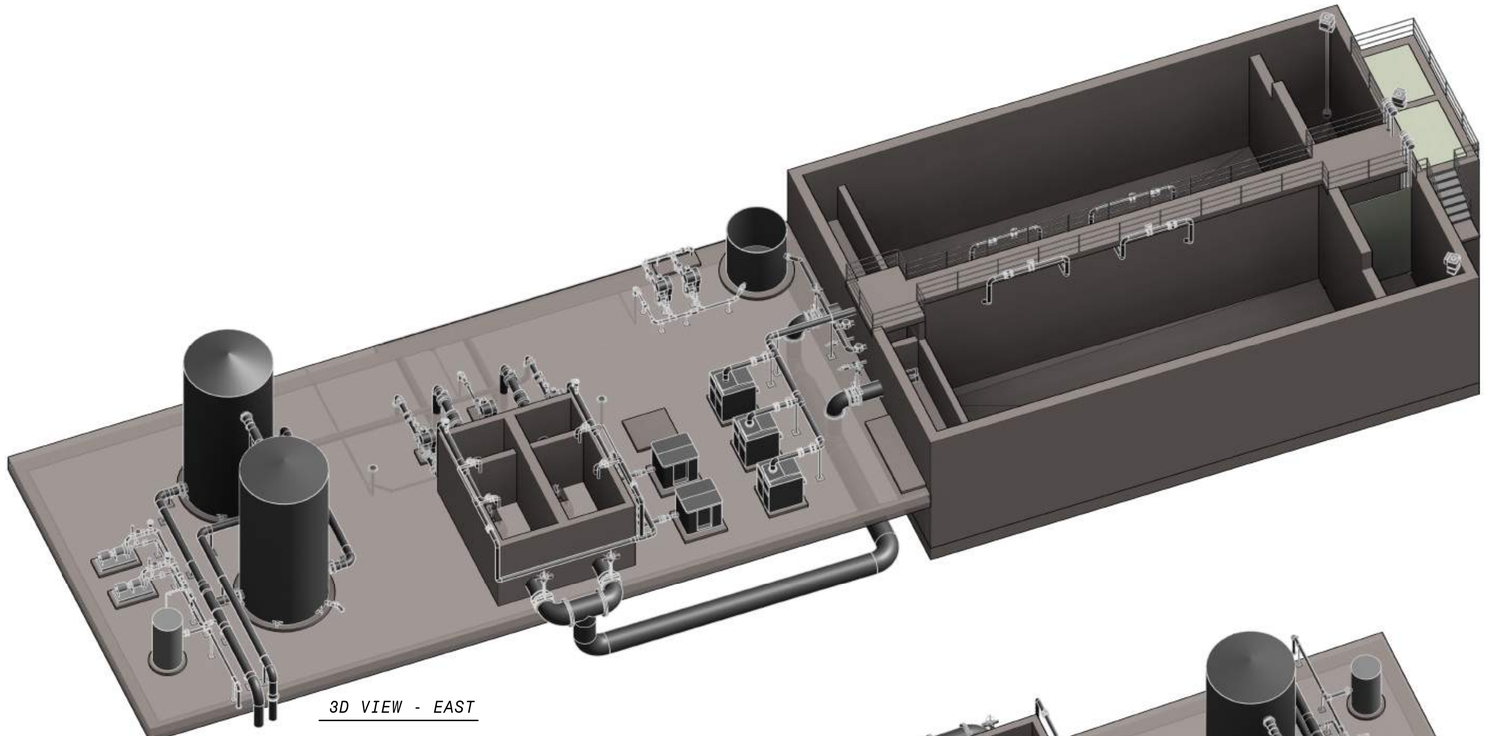

3D VIEW - EAST

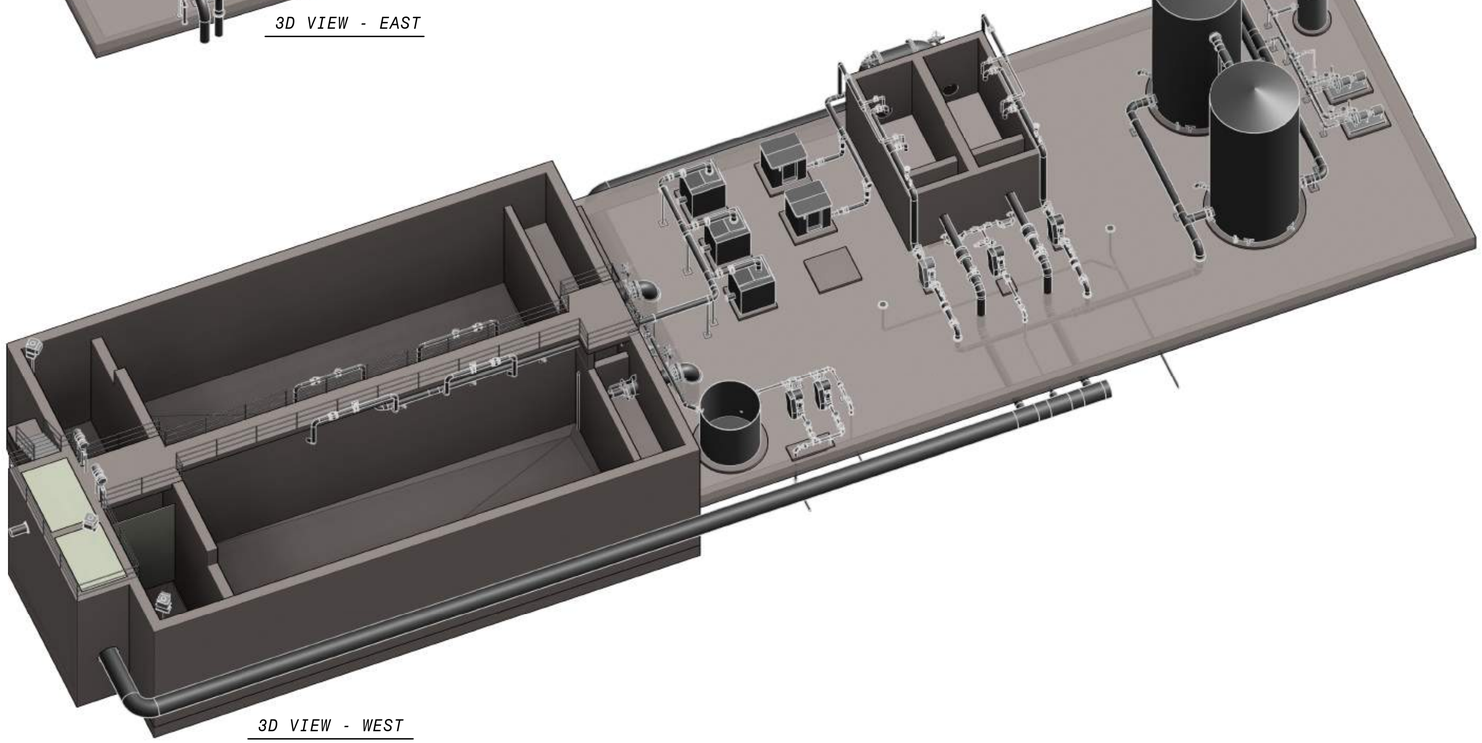

3D VIEW - WEST

60% SUBMITTAL- NOT FOR CONSTRUCTION

DATE	REVISIONS AND RECORD OF USE	NO.	BY	CHK	APP

Ashley & Vance ENGINEERING, INC

JOINT VENTURE

BLACK & VEATCH

FILANC

CITY OF MORRO BAY
MORRO BAY WATER
RECLAMATION FACILITY (WRF)

TREATMENT AREA-OVERALL
STRUCTURAL
3D VIEWS

DESIGNED: I. SHOEBRIDGE
DETAILED: S. BENJAMIN
CHECKED: Checker
APPROVED: Approver
DATE:

0 1/2 1

IF THIS BAR DOES NOT MEASURE 1" THEN DRAWING IS NOT TO FULL SCALE

PROJECT NO.
400530

30-S-001
SHEET
OF

PLOTTED: 7/29/2019 12:15:59 PM
D400530

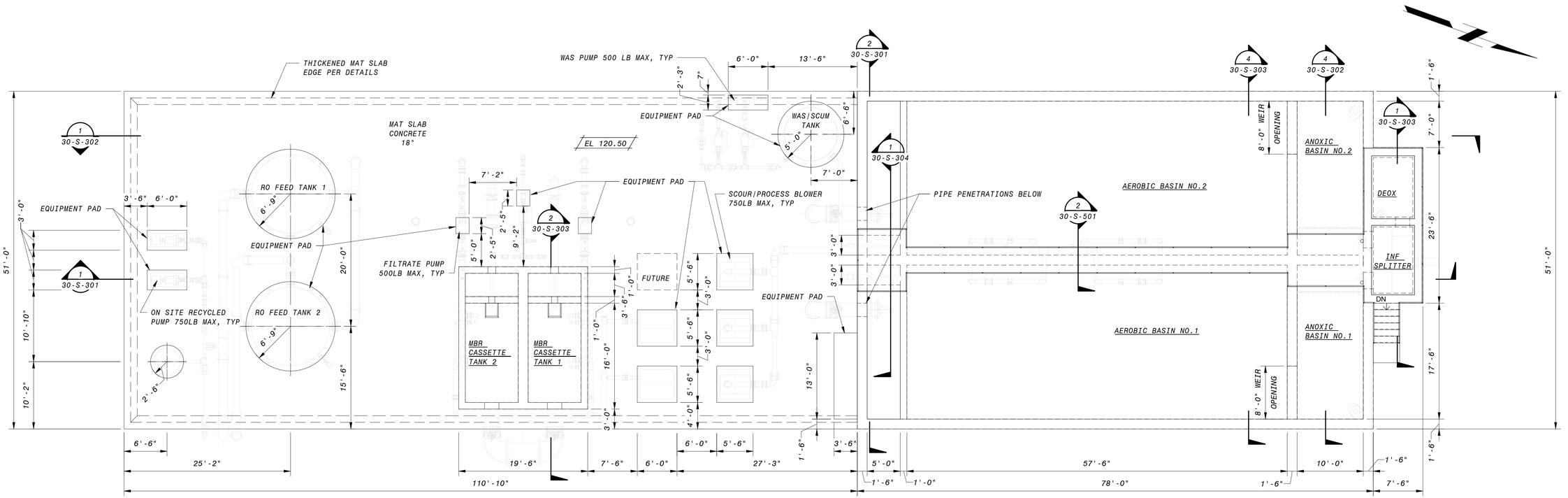

OPERATING LEVEL

1/8" = 1'-0"

GENERAL NOTES

1. PLEASE SEE SOILS REPORT FOR ADDITIONAL SPECIFICATIONS AND RECOMMENDATIONS. IT IS THE DESIGN BUILDER'S RESPONSIBILITY TO OBTAIN A COPY OF THE SOILS REPORT FROM THE OWNER OR OWNERS REPRESENTATIVE.
2. PRIOR TO THE DESIGN BUILDER REQUESTING A BUILDING DEPARTMENT FOUNDATION INSPECTION, THE SOILS ENGINEER SHALL ADVISE THE BUILDING INSPECTOR IN WRITING THAT:
   A. BUILDING PAD WAS PREPARED IN ACCORDANCE WITH SOILS REPORT
   B. UTILITY TRENCHES HAVE BEEN PROPERLY BACKFILLED AND COMPACTED.
   C. FONUDATION EXCAVATIONS, THE SOIL'S EXPANSIVE CHARACTERISTICS AND BEARING CAPACITY CONFORM TO THE SOILS REPORT.
3. SEE GENERAL NOTES & SPECIFICATIONS FOR ADDITIONAL REQUIRMENTS AND MATERIAL SPECIFICATIONS.
4. DESIGN BUILDER TO VERIFY ALL DIMENSIONS PRIOR TO COMMENCEMENT OF CONSTRUCTION.
5. ALL REINFORCEMENT LAP SPLICES TO BE CLASS B PER DETAIL 1/00-S-101
6. IF SPLICES RESULT IN CLEAR SPACING SESS THAN ACI CODE MINIMUMS, PROVIDE TYPE 2 MECHANICAL SPLICES. MECHANICAL CONNECTORS SHALL BE SUBMITTED FOR REVIEW AND APPROVAL.
7. ALL SLAB REINFORCEMENT MUST TERIMINATE WITH A STANDARD 90° HOOK.
8. FURNISH FRP ODOR CONTROL COVER DESIGNED FOR OUTDOOR INSTALLATION IN A COASTAL ENVIRONMENT. COVER SHALL BE DESIGNED WITH REMOVABLE PANELS TO BASIN ACCESS, WITH PANELS WEIGHING NO MORE THAN 100 LBS EACH. HANDLES AND PICK POINTS SHALL BE INCLUDED AS REQUIRED. PANELS SHALL BE DESIGNED FOR TWO OPERATORS TO BE STANDING ON THE COVER REMOVING A PANEL, 60 PSF UNIFORM DISTRIBUTED LIVE LOAD, 300 LB CONCENTRATED LIVE LOAD, AND LESSER OF L/120 OR 3/8" DEFLECTION. COLOR SHALL BE SELECTED IN SUBMITTAL REVIEW FROM MANUFACTURER STANDARD COLOR SELECTIONS.
9. SUBMIT EQUIPMENT WEIGHT FOR REVIEW PRIOR TO INSTALLATION. SEE DETAIL 1/00-S-105 FOR TYPICAL EQUIPMENT PADS. LOCATION & SIZE OF EQUIPMENT PADS TO BE COORDINATED WITH MECHANICAL/ELECTRICAL/PLUMBING DRAWINGS. EQUIPMENT ANCHORAGE PER PROJECT SPECIFICATIONS.
10. REFER TO MECHANICAL/ ELECTRICAL/ PLUMBING DRAWINGS FOR SIZE AND LOCATIONS OF PIPE PENETRATIONS AND WALL OPENINGS. SEE DETAIL 9/00-S-101 FOR TYPICAL REIFORCEMENT REQUIREMENTS. COORDINATE PIPE PENETRATION SEAL WITH MECHANICAL ENGINEER OF RECORD.
11. FOR TYPICAL MAT SLAB EDGE, REFER TO DETAIL 13/00-S-102.

8' 4' 0' 8' 16'

1/8" = 1'-0"

60% SUBMITTAL- NOT FOR CONSTRUCTION

NO.	BY	CHK	APP	DATE	REVISIONS AND RECORD OF USE

Ashley & Vance ENGINEERING, INC
BLACK & VEATCH
FILANC
JOINT VENTURE

CITY OF MORRO BAY
MORRO BAY WATER RECLAMATION FACILITY (WRF)

TREATMENT AREA
STRUCTURAL
OPERATING LEVEL PLAN

DESIGNED: I. SHOEBRIDGE
DETAILED: S. BENJAMIN
CHECKED: Checker
APPROVED: Approver
DATE:

0 1/2 1
IF THIS BAR DOES NOT MEASURE 1" THEN DRAWING IS NOT TO FULL SCALE

PROJECT NO. 400530

30-S-101
SHEET OF

PLOTTED: 7/29/2019 12:16:00 PM
D400530

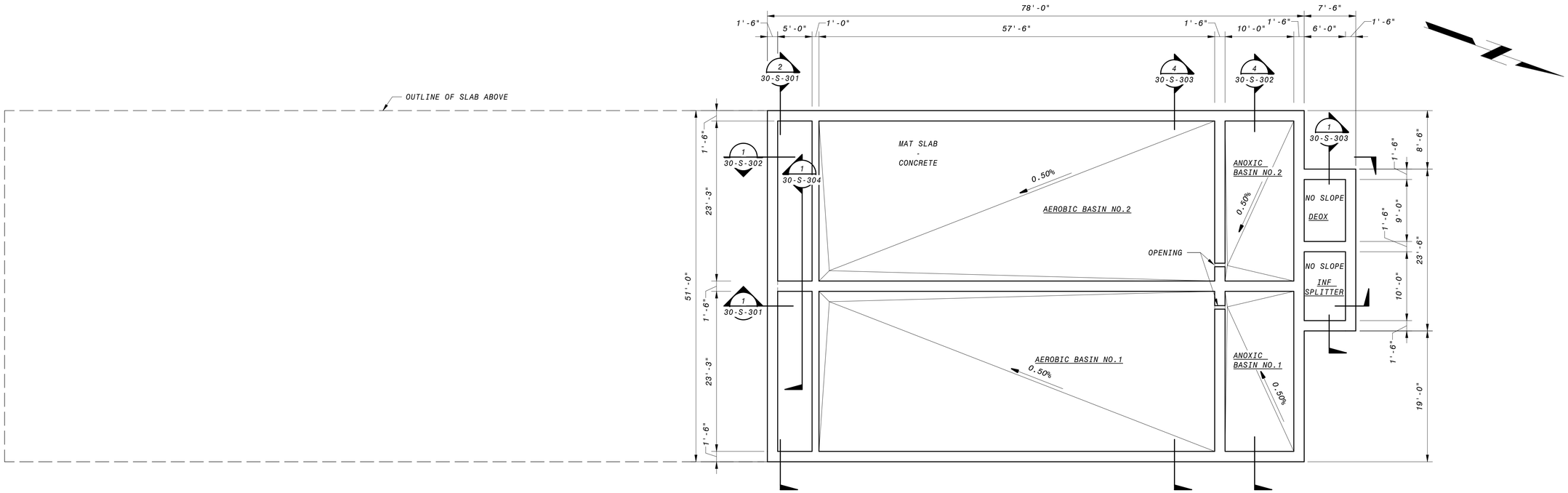

LOWER PLAN

1/8" = 1'-0"

GENERAL NOTES

1. PLEASE SEE SOILS REPORT FOR ADDITIONAL SPECIFICATIONS AND RECOMMENDATIONS. IT IS THE DESIGN BUILDER'S RESPONSIBILITY TO OBTAIN A COPY OF THE SOILS REPORT FROM THE OWNER OR OWNERS REPRESENTATIVE.
2. PRIOR TO THE DESIGN BUILDER REQUESTING A BUILDING DEPARTMENT FOUNDATION INSPECTION, THE SOILS ENGINEER SHALL ADVISE THE BUILDING INSPECTOR IN WRITING THAT:
   A. BUILDING PAD WAS PREPARED IN ACCORDANCE WITH SOILS REPORT
   B. UTILITY TRENCHES HAVE BEEN PROPERLY BACKFILLED AND COMPACTED.
   C. FONUDATION EXCAVATIONS, THE SOIL'S EXPANSIVE CHARACTERISTICS AND BEARING CAPACITY CONFORM TO THE SOILS REPORT.
3. SEE GENERAL NOTES & SPECIFICATIONS FOR ADDITIONAL REQUIRMENTS AND MATERIAL SPECIFICATIONS.
4. DESIGN BUILDER TO VERIFY ALL DIMENSIONS PRIOR TO COMMENCEMENT OF CONSTRUCTION.
5. ALL REINFORCEMENT LAP SPLICES TO BE CLASS B 1/00-S-101
6. IF SPLICES RESULT IN CLEAR SPACING SESS THAN ACI CODE MINIMUMS, PROVIDE TYPE 2 MECHANICAL SPLICES. MECHANICAL CONNECTORS SHALL BE SUBMITTED TO EOR FOR REVIEW AND APPROVAL.
7. ALL SLAB REINFORCEMENT MUST TERIMINATE WITH A STANDARD 90° HOOK.
8. REFER TO MECHANICAL/ ELECTRICAL/ PLUMBING DRAWINGS FOR SIZE AND LOCATIONS OF PIPE PENETRATIONS AND WALL OPENINGS. SEE DETAIL 9/00-S-101 FOR TYPICAL REIFORCEMENT REQUIREMENTS. COORDINATE PIPE PENETRATION SEAL WITH MECHANICAL ENGINEER OF RECORD.

8' 4' 0' 8' 16'

1/8" = 1'-0"

60% SUBMITTAL- NOT FOR CONSTRUCTION

NO.	BY	CHK	APP	DATE	REVISIONS AND RECORD OF USE

Ashley & Vance ENGINEERING, INC
JOINT VENTURE
BLACK & VEATCH
FILANC

CITY OF MORRO BAY
MORRO BAY WATER
RECLAMATION FACILITY (WRF)

TREATMENT AREA
STRUCTURAL
LOWER PLAN

DESIGNED: I. SHOEBRIDGE
DETAILED: S. BENJAMIN
CHECKED: Checker
APPROVED: Approver
DATE:

0 1/2 1
IF THIS BAR DOES NOT MEASURE 1" THEN DRAWING IS NOT TO FULL SCALE

PROJECT NO.
400530

30-S-102
SHEET
OF

PLOTTED: 7/29/2019 12:16:00 PM
D400530

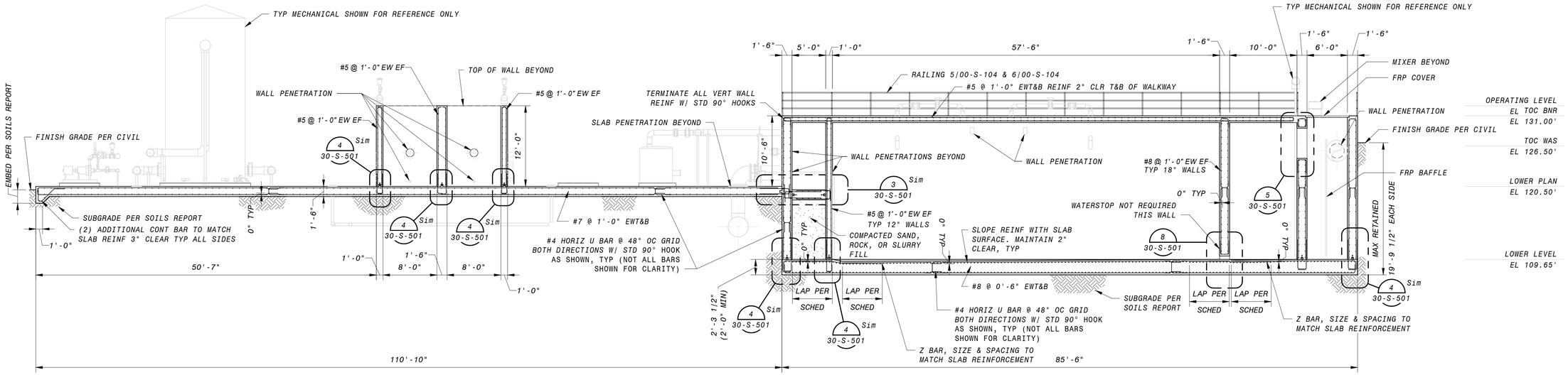

1 SECTION
30-S-101 1/8" = 1'-0"

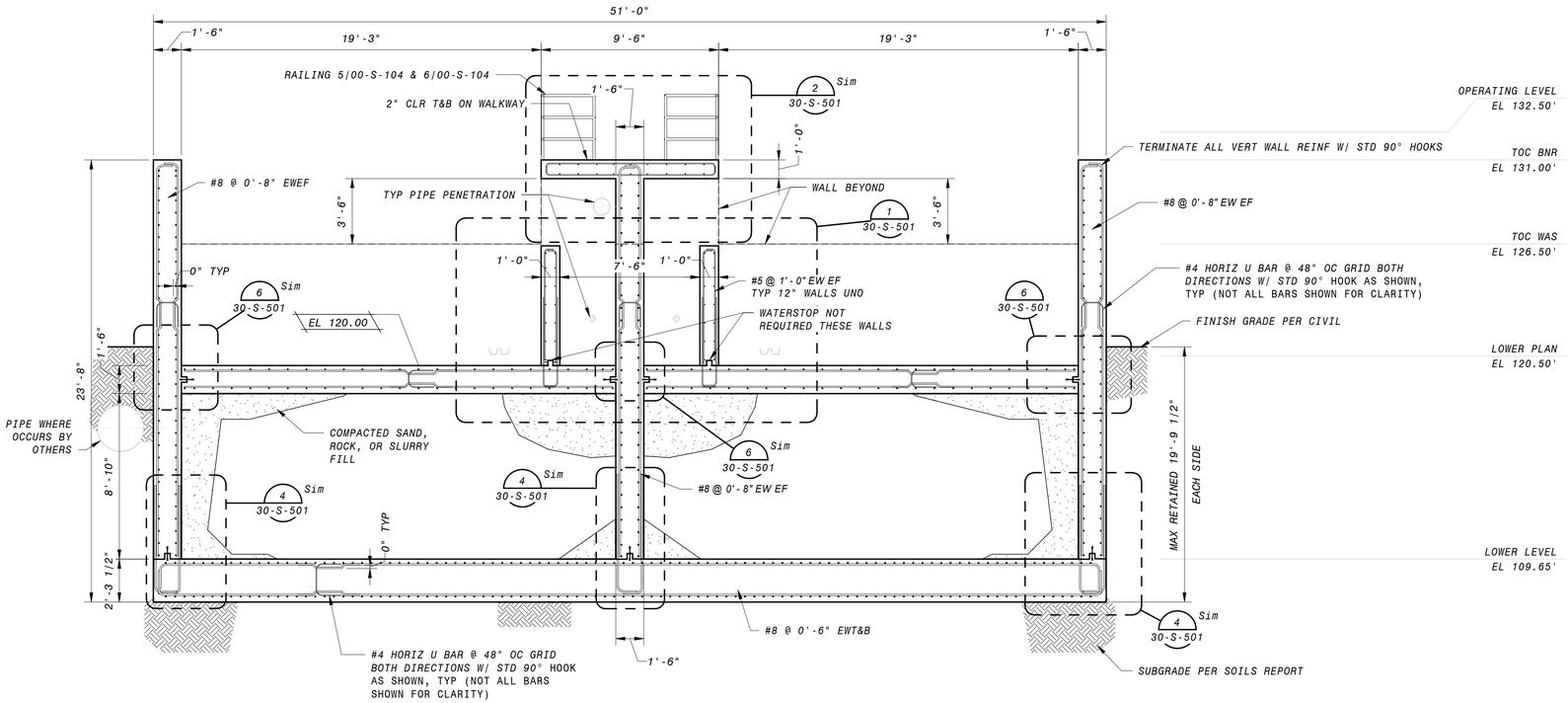

2 SECTION
30-S-101 1/4" = 1'-0"

GENERAL SECTION NOTES

1. FOR GENERAL STRUCTURAL NOTES, SEE SHEET 00-S-002 AND STANDARD SPECIFICATIONS.
2. AT WALLS 12" THICK OR LESS, PROVIDE A 6" WATERSTOP, UNO. AT WALLS GREATER THAN 12" THICK, PROVIDE A 9" WATERSTOP, UNO. REFER TO DETAIL 2 ON SHEET 00-S-103.
3. REINFORCEMENT CLEAR COVER TO BE 2" EF FOR WALLS, 2" AT TOP OF SLABS, AND 3" AT BOTTOM OF SLABS, TYP., UNO
4. FURNISH FRP ODOR CONTROL COVER DESIGNED FOR OUTDOOR INSTALLATION IN COASTAL ENVIRONMENT. COVER SHALL BE DESIGNED WITH REMOVABLE PANELS TO BASIN ACCESS, WITH PANELS WEIGHING NO MORE THAN 100 LBS EACH. HANDLES AND PICK POINTS SHALL BE INCLUDED AS REQUIRED. PANELS SHALL BE DESIGNED FOR TWO OPERATORS TO BE STANDING ON THE COVER REMOVING A PANEL, 60 PSF UNIFORM DISTRIBUTED LIVE LOAD, 300 LB CONCENTRATED LIVE LOAD, AND LESSER OF L/120 OR 3/8" DEFLECTION. COLOR SHALL BE SELECTED IN SUBMITTAL REVIEW FROM MANUFACTURER STANDARD COLOR SELECTIONS.
5. ALL LAP SPLICES TO BE CLASS B PER DETAIL 1/00-S-101.
6. REFER TO MECHANICAL DRAWINGS FOR SIZE AND LOCATIONS OF PIPE PENETRATIONS AND WALL OPENINGS. SEE DETAIL 9/00-S-101 FOR TYPICAL REINFORCEMENT REQUIREMENTS. COORDINATE PIPE PENETRATION SEAL WITH MECHANICAL EOR (WHERE OCCURS).
7. PROVIDE GATE PER MECHANICAL DRAWINGS. COORDINATE OPENING SIZE AND ATTACHMENT WITH EOR.
8. SUBMIT EQUIPMENT WEIGHT FOR REVIEW PRIOR TO INSTALLATION. SEE DETAIL 1/00-S-105 FOR TYPICAL EQUIPMENT PADS. LOCATION & SIZE OF EQUIPMENT PADS TO BE COORDINATED WITH MECHANICAL/ ELECTRICAL/ PLUMBING DRAWINGS. EQUIPMENT ANCHORAGE PER PROJECT SPECIFICATIONS.
9. FOR TYPICAL MAT SLAB EDGE, REFER TO DETAIL 13/00-S-102.
10. PROVIDE COMPLETE DESIGN PACKAGE FOR DAVIT AND MIXERS.

8' 4' 0' 8' 16'
1/8" = 1'-0"

60% SUBMITTAL- NOT FOR CONSTRUCTION

NO.	BY	CHK	APP	DATE	REVISIONS AND RECORD OF USE

Ashley & Vance ENGINEERING, INC
JOINT VENTURE
BLACK & VEATCH
FILANC

CITY OF MORRO BAY
MORRO BAY WATER
RECLAMATION FACILITY (WRF)

TREATMENT AREA
STRUCTURAL
SECTIONS & DETAILS 1

DESIGNED: I. SHOEBRIDGE
DETAILED: S. BENJAMIN
CHECKED: Checker
APPROVED: Approver
DATE:

0 1/2 1
IF THIS BAR DOES NOT MEASURE 1" THEN DRAWING IS NOT TO FULL SCALE

PROJECT NO.
400530

30-S-301
SHEET
OF

PLOTTED: 7/29/2019 12:16:02 PM
D400530

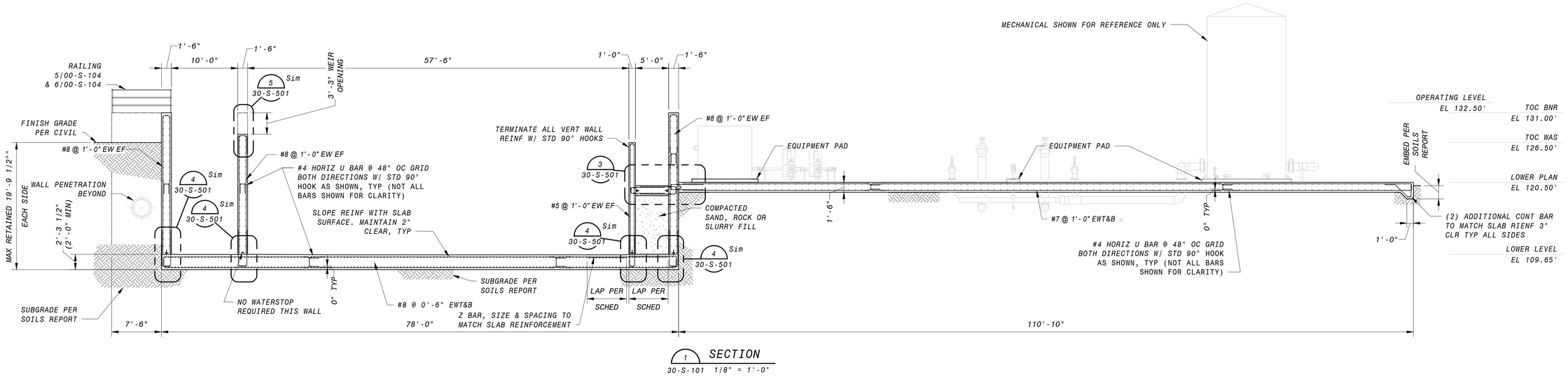

1 30-S-101 SECTION
1/8" = 1'-0"

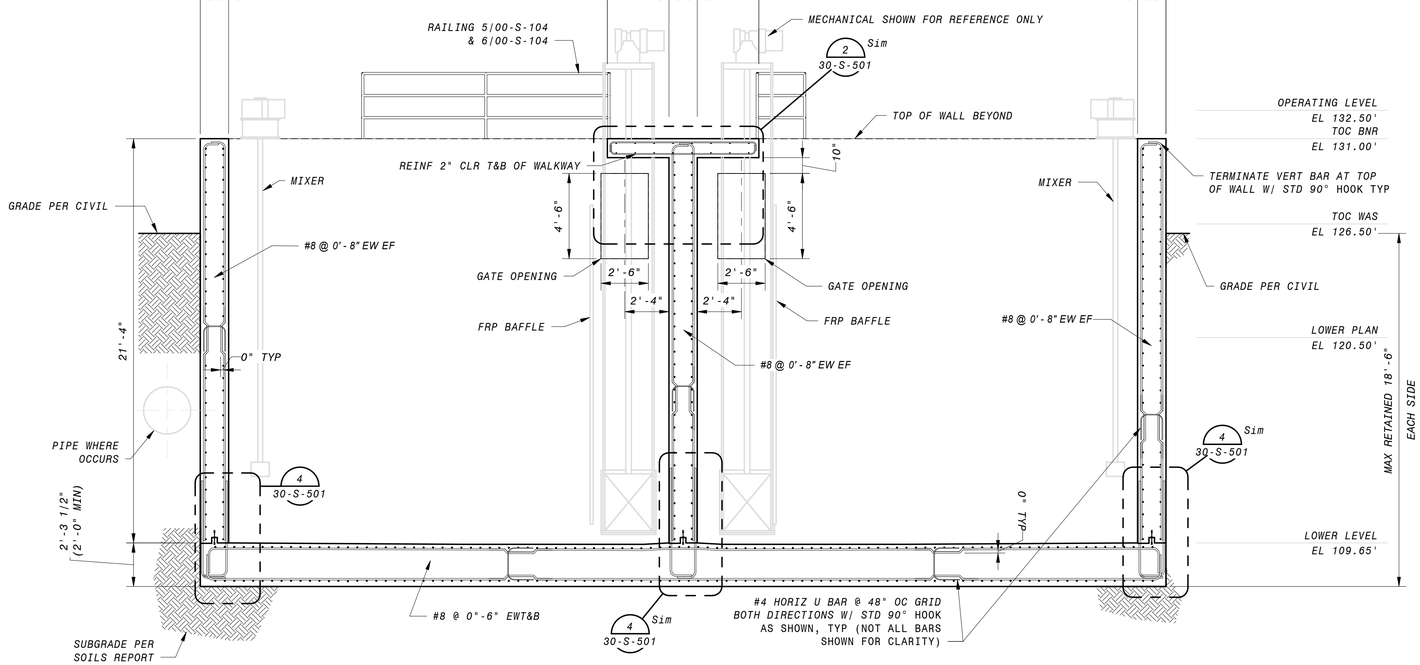

4 30-S-101 SECTION
1/4" = 1'-0"

GENERAL SECTION NOTES

1. FOR GENERAL STRUCTURAL NOTES, SEE SHEET 00-S-002 AND STANDARD SPECIFICATIONS.
2. AT WALLS 12" THICK OR LESS, PROVIDE A 6" WATERSTOP, UNO. AT WALLS GREATER THAN 12" THICK, PROVIDE A 9" WATERSTOP, UNO. REFER TO DETAIL 2 ON SHEET 00-S-103.
3. REINFORCEMENT CLEAR COVER TO BE 2" EF FOR WALLS, 2" AT TOP OF SLABS, AND 3" AT BOTTOM OF SLABS, TYP., UNO
4. ALL LAP SPLICES TO BE CLASS B PER DETAIL 1/00-S-101.
5. REFER TO MECHANICAL DRAWINGS FOR SIZE AND LOCATIONS OF PIPE PENETRATIONS AND WALL OPENINGS. SEE DETAIL 9/00-S-101 FOR TYPICAL REINFORCEMENT REQUIREMENTS. COORDINATE PIPE PENETRATION SEAL WITH MECHANICAL EOR (WHERE OCCURS).
6. PROVIDE WEIR PLATE PER MECHANICAL DRAWINGS. COORDINATE OPENING SIZE & PLATE ATTACHMENT WITH EOR.
7. PROVIDE GATE PER MECHANICAL DRAWINGS. COORDINATE OPENING SIZE WITH EOR.
8. SUBMIT EQUIPMENT WEIGHT FOR REVIEW PRIOR TO INSTALLATION. SEE DETAIL 1/00-S-105 FOR TYPICAL EQUIPMENT PADS. LOCATION & SIZE OF EQUIPMENT PADS TO BE COORDINATED WITH MECHANICAL/ ELECTRICAL/ PLUMBING DRAWINGS. EQUIPMENT ANCHORAGE PER PROJECT SPECIFICATIONS.
9. PROVIDE COMPLETE DESIGN PACKAGE FOR FRP BAFFLE PLATE (INCLUDING ANCHORAGE) SIGNED BY REGISTERED PROFESSIONAL ENGINEER FOR REVIEW.
10. FOR TYPICAL MAT SLAB EDGE, REFER TO DETAIL 13/00-S-102.
11. PROVIDE COMPLETE DESIGN PACKAGE FOR DAVIT AND MIXWERS.

8' 4' 0' 8' 16'
1/8" = 1'-0"

60% SUBMITTAL- NOT FOR CONSTRUCTION

NO.	BY	CHK	APP	DATE	REVISIONS AND RECORD OF USE

Ashley & Vance ENGINEERING, INC
BLACK & VEATCH
JOINT VENTURE
FILANC

CITY OF MORRO BAY
MORRO BAY WATER RECLAMATION FACILITY (WRF)

TREATMENT AREA
STRUCTURAL
SECTIONS & DETAILS 2

DESIGNED: I. SHOEBRIDGE
DETAILED: S. BENJAMIN
CHECKED: Checker
APPROVED: Approver
DATE:

0 1/2 1
IF THIS BAR DOES NOT MEASURE 1" THEN DRAWING IS NOT TO FULL SCALE

PROJECT NO. 400530

30-S-302
SHEET OF

PLOTTED: 7/29/2019 12:16:02 PM
D400530

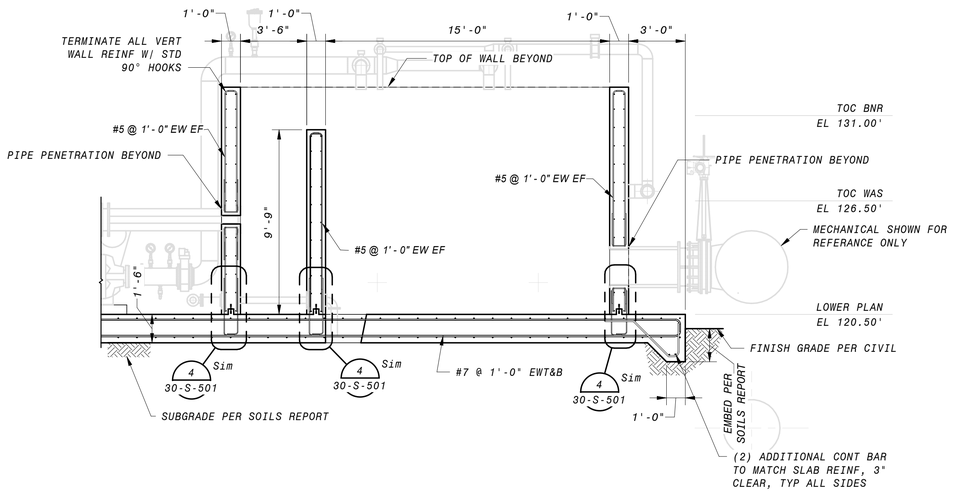

2 SECTION
30-S-101 1/4" = 1'-0"

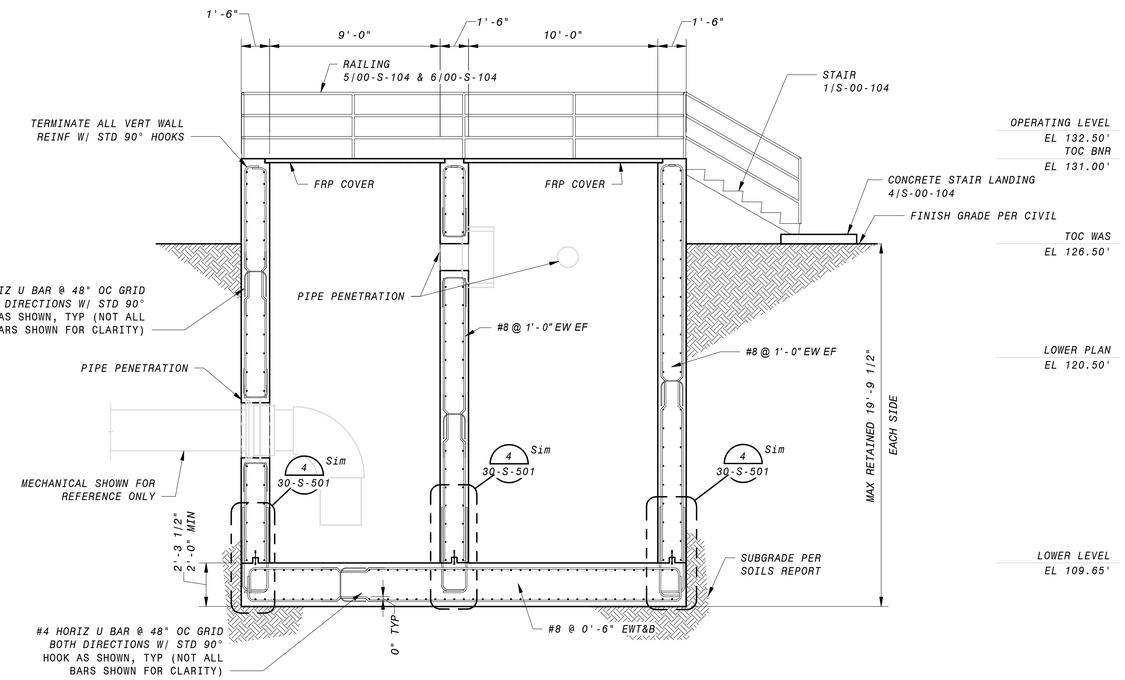

1 SECTION
30-S-101 1/4" = 1'-0"

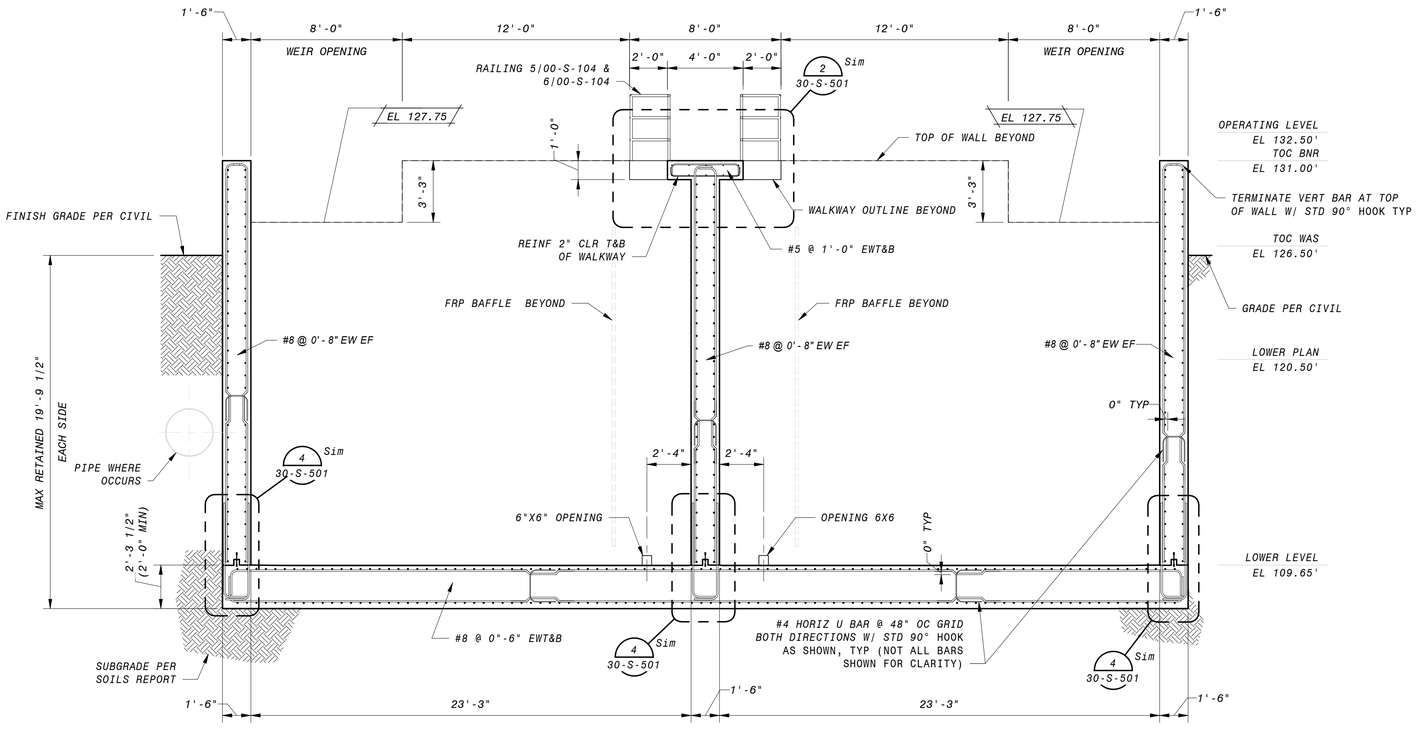

4 SECTION
30-S-101 1/4" = 1'-0"

GENERAL SECTION NOTES

1. FOR GENERAL STRUCTURAL NOTES, SEE SHEETS 00-S-002 AND STANDARD SPECIFICATIONS.
2. AT WALLS 12" THICK OR LESS, PROVIDE A 6" WATERSTOP, UNO. AT WALLS GREATER THAN 12" THICK, PROVIDE A 9" WATERSTOP, UNO. REFER TO DETAIL 2 ON SHEET 00-S-103.
3. REINFORCEMENT CLEAR COVER TO BE 2" EF FOR WALLS, 2" AT TOP OF SLABS, AND 3" AT BOTTOM OF SLABS, TYP., UNO
4. FURNISH FRP ODOR CONTROL COVER DESIGNED FOR OUTDOOR INSTALLATION IN A COASTAL ENVIRONMENT. COVER SHALL BE DESIGNED WITH REMOVABLE PANELS TO BASIN ACCESS, WITH PANELS WEIGHING NO MORE THAN 100 LBS EACH. HANDLES AND PICK POINTS SHALL BE INCLUDED AS REQUIRED. PANELS SHALL BE DESIGNED FOR TWO OPERATORS TO BE STANDING ON THE COVER REMOVING A PANEL, 60 PSF UNIFORM DISTRIBUTED LIVE LOAD, 300 LB CONCENTRATED LIVE LOAD, AND LESSER OF L/120 OR 3/8" DEFLECTION. COLOR SHALL BE SELECTED IN SUBMITTAL REVIEW FROM MANUFACTURER STANDARD COLOR SELECTIONS.
5. ALL LAP SPLICES TO BE CLASS B PER DETAIL 1/00-S-101.
6. REFER TO MECHANICAL DRAWINGS FOR SIZE AND LOCATIONS OF PIPE PENETRATIONS AND WALL OPENINGS. SEE DETAIL 9/00-S-101 FOR TYPICAL REINFORCEMENT REQUIREMENTS. COORDINATE PIPE PENETRATION SEAL WITH EOR (WHERE OCCURS).
7. PROVIDE WEIR PLATE PER MECHANICAL DRAWINGS. COORDINATE OPENING SIZE & PLATE ATTACHMENT WITH EOR.
8. PROVIDE GATE PER MECHANICAL DRAWINGS. COORDINATE OPENING SIZE WITH EOR.
9. SUBMIT EQUIPMENT WEIGHT FOR REVIEW PRIOR TO INSTALLATION. SEE DETAIL 1/00-S-105 FOR TYPICAL EQUIPMENT PADS. LOCATION & SIZE OF EQUIPMENT PADS TO BE COORDINATED WITH MECHANICAL/ ELECTRICAL/ PLUMBING DRAWINGS. EQUIPMENT ANCHORAGE PER PROJECT SPECIFICATIONS.
10. PROVIDE COMPLETE DESIGN PACKAGE FOR FRP BAFFLE PLATE (INCLUDING ANCHORAGE) SIGNED BY REGISTERED PROFESSIONAL ENGINEER TO THE EOR FOR REVIEW AND APPROVAL.
11. FOR TYPICAL MAT SLAB EDGE, REFER TO DETAIL 13/00-S-102.

60% SUBMITTAL- NOT FOR CONSTRUCTION

NO.	BY	CHK	APP	DATE	REVISIONS AND RECORD OF USE

Ashley & Vance ENGINEERING, INC
JOINT VENTURE
BLACK & VEATCH
FILANC

CITY OF MORRO BAY
MORRO BAY WATER RECLAMATION FACILITY (WRF)

TREATMENT AREA
STRUCTURAL
SECTIONS & DETAILS 3

DESIGNED: I. SHOEBRIDGE
DETAILED: S. BENJAMIN
CHECKED: Checker
APPROVED: Approver
DATE:

0 1/2 1
IF THIS BAR DOES NOT MEASURE 1" THEN DRAWING IS NOT TO FULL SCALE

PROJECT NO. 400530

30-S-303
SHEET OF

PLOTTED: 7/29/2019 12:16:03 PM
D400530

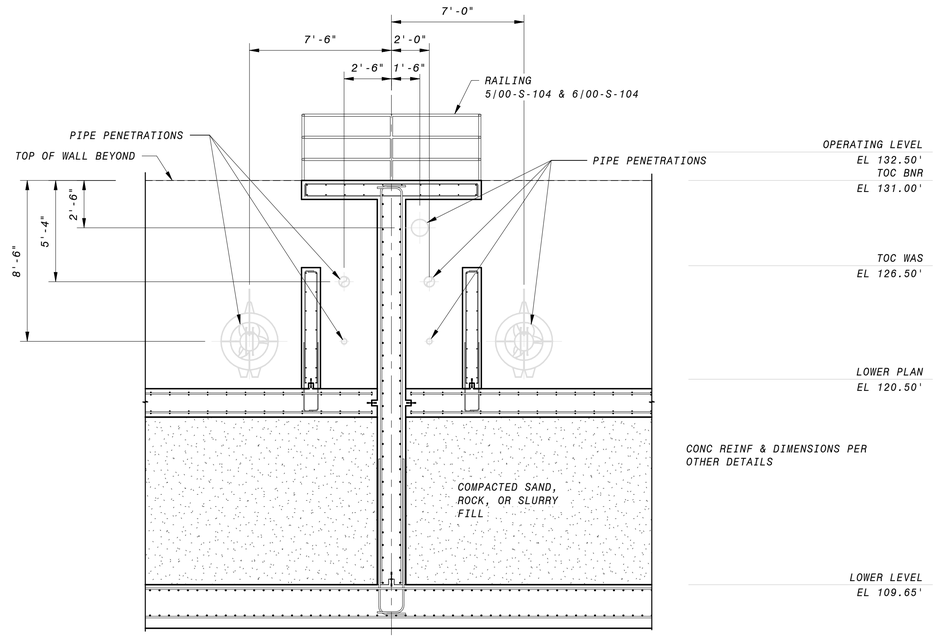

1 SECTION
30-S-101 1/4" = 1'-0"

GENERAL SECTION NOTES

1. FOR GENERAL STRUCTURAL NOTES, SEE SHEET 00-S-002 AND STANDARD SPECIFICATIONS.
2. AT WALLS 12" THICK OR LESS, PROVIDE A 6" WATERSTOP, UNO. AT WALLS GREATER THAN 12" THICK, PROVIDE A 9" WATERSTOP, UNO. REFER TO DETAIL 2 ON SHEET 00-S-103.
3. REINFORCEMENT CLEAR COVER TO BE 2" EF FOR WALLS, 2" AT TOP OF SLABS, AND 3" AT BOTTOM OF SLABS, TYP., UNO
4. ALL LAP SPLICES TO BE CLASS B PER DETAIL 1/00-S-101.
5. REFER TO MECHANICAL DRAWINGS FOR SIZE AND LOCATIONS OF PIPE PENETRATIONS AND WALL OPENINGS. SEE DETAIL 9/00-S-101 FOR TYPICAL REINFORCEMENT REQUIREMENTS. COORDINATE PIPE PENETRATION SEAL WITH MECHANICAL EOR (WHERE OCCURS).

60% SUBMITTAL- NOT FOR CONSTRUCTION

NO.	BY	CHK	APP	DATE	REVISIONS AND RECORD OF USE

Ashley&Vance ENGINEERING, INC
JOINT VENTURE
BLACK&VEATCH
FILANC

CITY OF MORRO BAY
MORRO BAY WATER
RECLAMATION FACILITY (WRF)

TREATMENT AREA
STRUCTURAL
SECTIONS & DETAILS 4

DESIGNED: I. SHOEBRIDGE
DETAILED: S. BENJAMIN
CHECKED: Checker
APPROVED: Approver
DATE:

0 1/2 1
IF THIS BAR DOES NOT MEASURE 1" THEN DRAWING IS NOT TO FULL SCALE

PROJECT NO.
400530

30-S-304
SHEET
OF

PLOTTED: 7/29/2019 12:16:03 PM
D400530

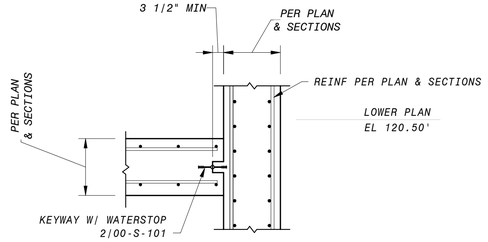

6 SECTION
30-S-301 1/2" = 1'-0"

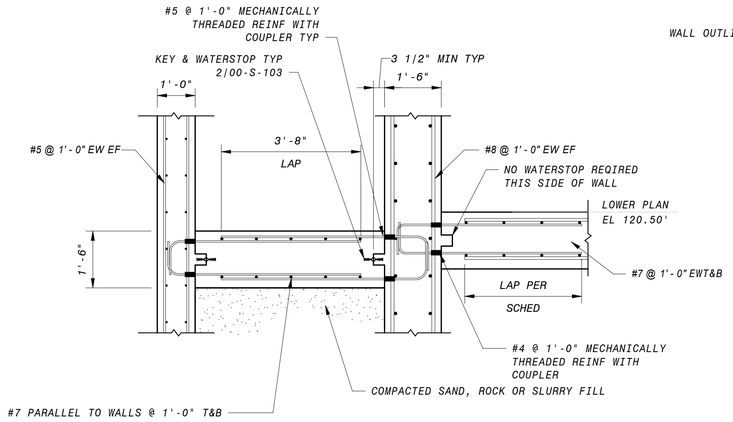

3 SECTION
30-S-301 1/2" = 1'-0"

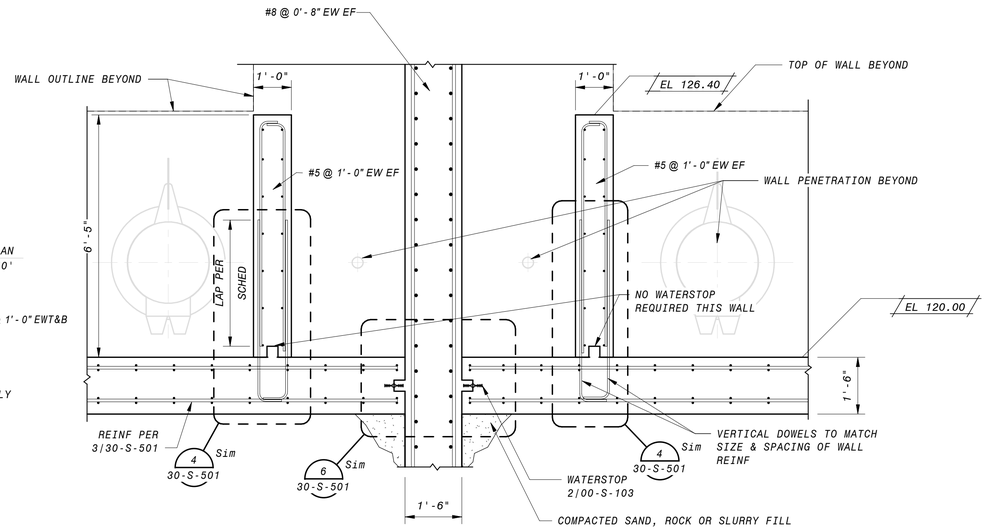

1 SECTION
30-S-301 1/2" = 1'-0"

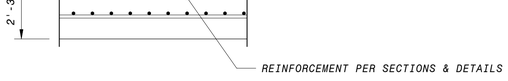

8 SECTION
30-S-301 1/2" = 1'-0"

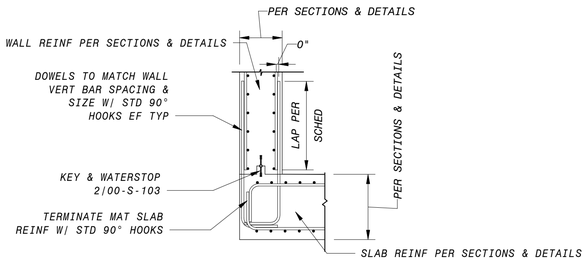

4 TYP WALL TO SLAB JOINT
30-S-301 3/8" = 1'-0"

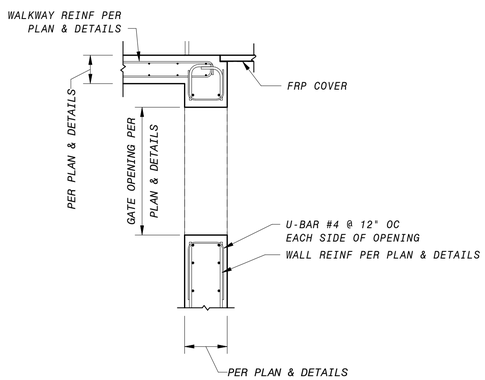

5 TYP WALL OPENING
30-S-301 3/8" = 1'-0"

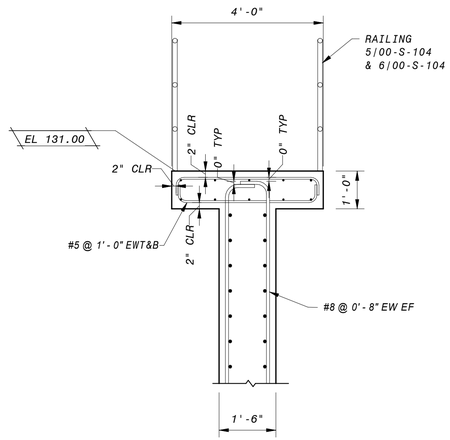

2 TYP WALKWAY TO WALL
30-S-101 1/2" = 1'-0"

GENERAL SECTION NOTES

1. FOR GENERAL STRUCTURAL NOTES, SEE SHEETS 00-S-002 AND STANDARD SPECIFICATIONS.
2. AT WALLS 12" THICK OR LESS, PROVIDE A 6" WATERSTOP, UNO. AT WALLS GREATER THAN 12" THICK, PROVIDE A 9" WATERSTOP, UNO. REFER TO DETAIL 2 ON SHEET 00-S-006.
3. REINFORCEMENT CLEAR COVER TO BE 2" EF FOR WALLS, 2" AT TOP OF SLABS, AND 3" AT BOTTOM OF SLABS, TYP., UNO
4. FURNISH FRP ODOR CONTROL COVER DESIGNED FOR OUTDOOR INSTALLATION IN A COASTAL ENVIRONMENT. COVER SHALL BE DESIGNED WITH REMOVABLE PANELS TO BASIN ACCESS, WITH PANELS WEIGHING NO MORE THAN 100 LBS EACH. HANDLES AND PICK POINTS SHALL BE INCLUDED AS REQUIRED. PANELS SHALL BE DESIGNED FOR TWO OPERATORS TO BE STANDING ON THE COVER REMOVING A PANEL, 60 PSF UNIFORM DISTRIBUTED LIVE LOAD, 300 LB CONCENTRATED LIVE LOAD, AND LESSER OF L/120 OR 3/8" DEFLECTION. COLOR SHALL BE SELECTED IN SUBMITTAL REVIEW FROM MANUFACTURER STANDARD COLOR SELECTIONS.
5. ALL LAP SPLICES TO BE CLASS B PER DETAIL 1/00-S-004.
6. REFER TO MECHANICAL DRAWINGS FOR SIZE AND LOCATIONS OF PIPE PENETRATIONS AND WALL OPENINGS. SEE DETAIL 9/00-S-004 FOR TYPICAL REINFORCEMENT REQUIREMENTS. COORDINATE PIPE PENETRATION SEAL WITH EOR (WHERE OCCURS).
7. PROVIDE GATE PER MECHANICAL DRAWINGS. COORDINATE OPENING SIZE WITH EOR.
8. ALL MECHANICAL SPLICES SHALL BE TYPE 2 AND DEVELOP AT LEAST 1.25FY OF THE BAR.

60% SUBMITTAL- NOT FOR CONSTRUCTION

NO.	BY	CHK	APP	DATE	REVISIONS AND RECORD OF USE

Ashley & Vance ENGINEERING, INC
JOINT VENTURE
BLACK & VEATCH
FILANC

CITY OF MORRO BAY
MORRO BAY WATER
RECLAMATION FACILITY (WRF)

TREATMENT AREA
STRUCTURAL
SECTIONS & DETAILS 5

DESIGNED: I. SHOEBRIDGE
DETAILED: S. BENJAMIN
CHECKED: Checker
APPROVED: Approver
DATE:

0 1/2 1
IF THIS BAR DOES NOT MEASURE 1" THEN DRAWING IS NOT TO FULL SCALE

PROJECT NO. 400530

30-S-501
SHEET
OF

PLOTTED: 7/29/2019 12:16:03 PM
D400530

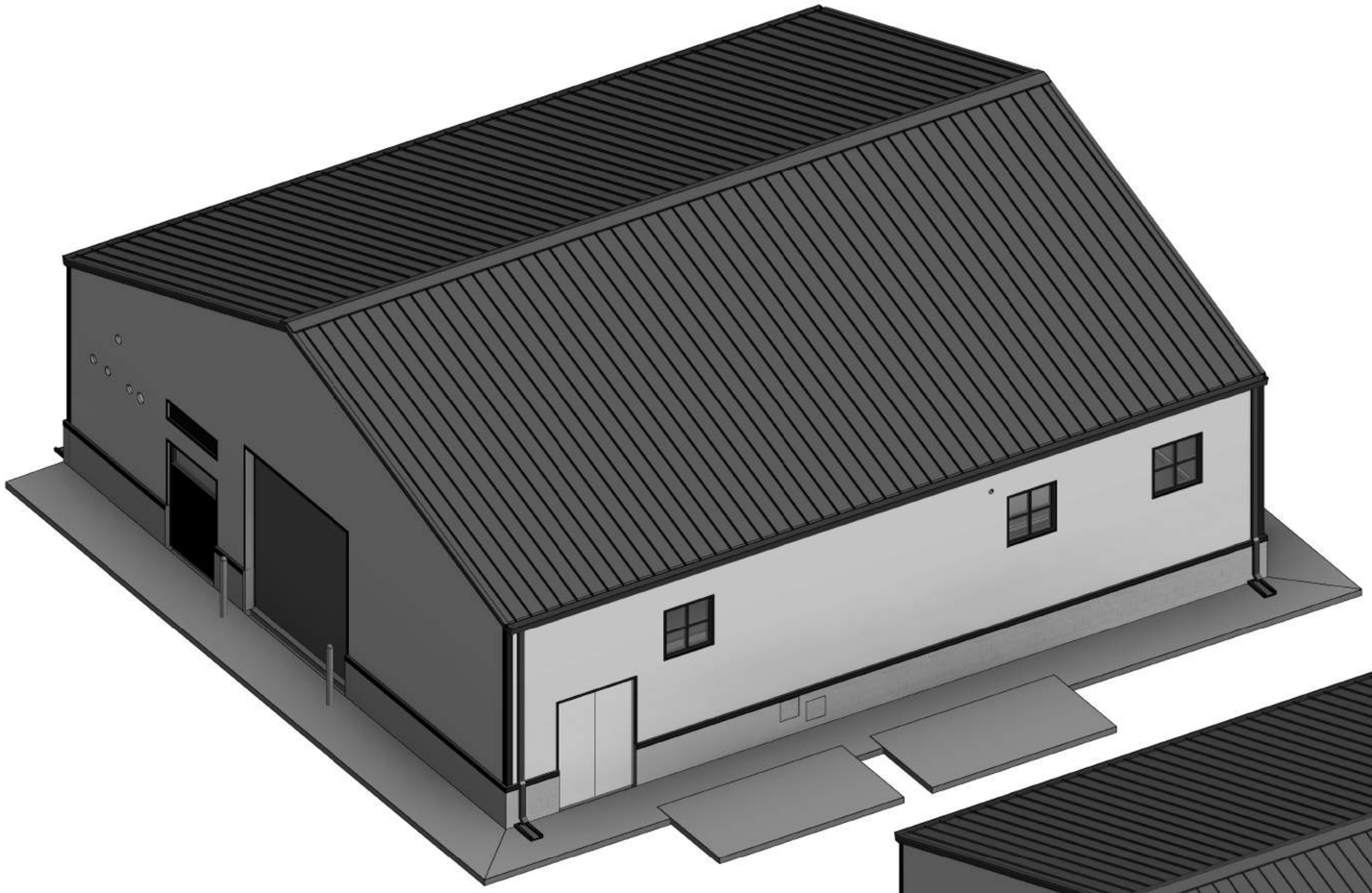

3D VIEW - EAST

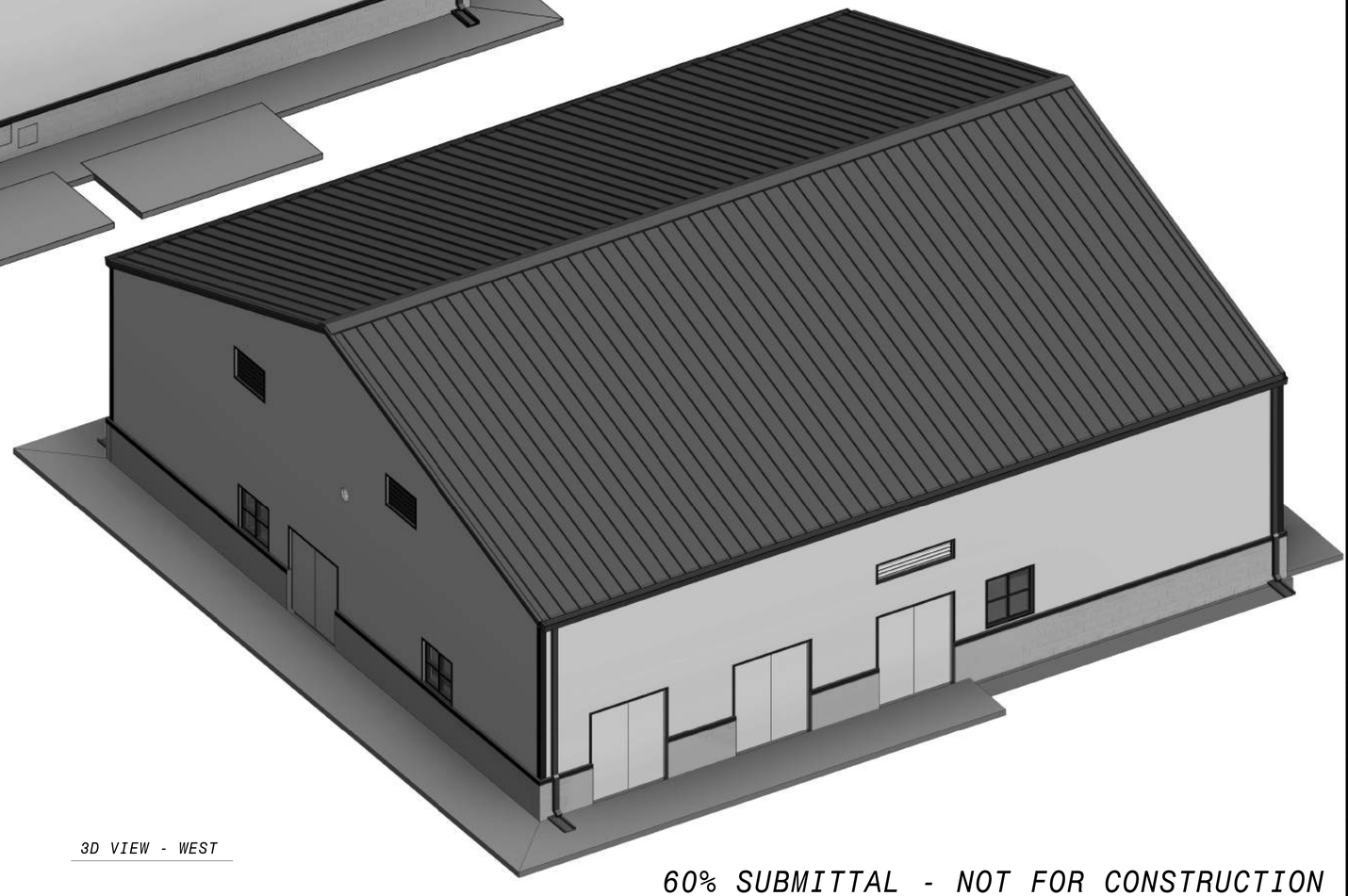

3D VIEW - WEST

60% SUBMITTAL - NOT FOR CONSTRUCTION

DATE	REVISIONS AND RECORD OF USE	NO.	BY	CHK	APP

Ashley & Vance ENGINEERING, INC
JOINT VENTURE
FILANC
BLACK & VEATCH

CITY OF MORRO BAY
FILANC BLACK & VEATCH DB PROPOSAL
WATER RECLAMATION FACILITY (WRF)

RO/UV BUILDING
STRUCTURAL
3D VIEWS

DESIGNED: I. SHOEBRIDGE
DETAILED: S. BENJAMIN
CHECKED: Checker
APPROVED: Approver
DATE: XX/XX/XXXX

0 1/2 1
IF THIS BAR DOES NOT MEASURE 1" THEN DRAWING IS NOT TO FULL SCALE

PROJECT NO.
81203

S-50-001
SHEET
OF XXX

PLOTTED: 7/29/2019 7:29:59 PM
D400530

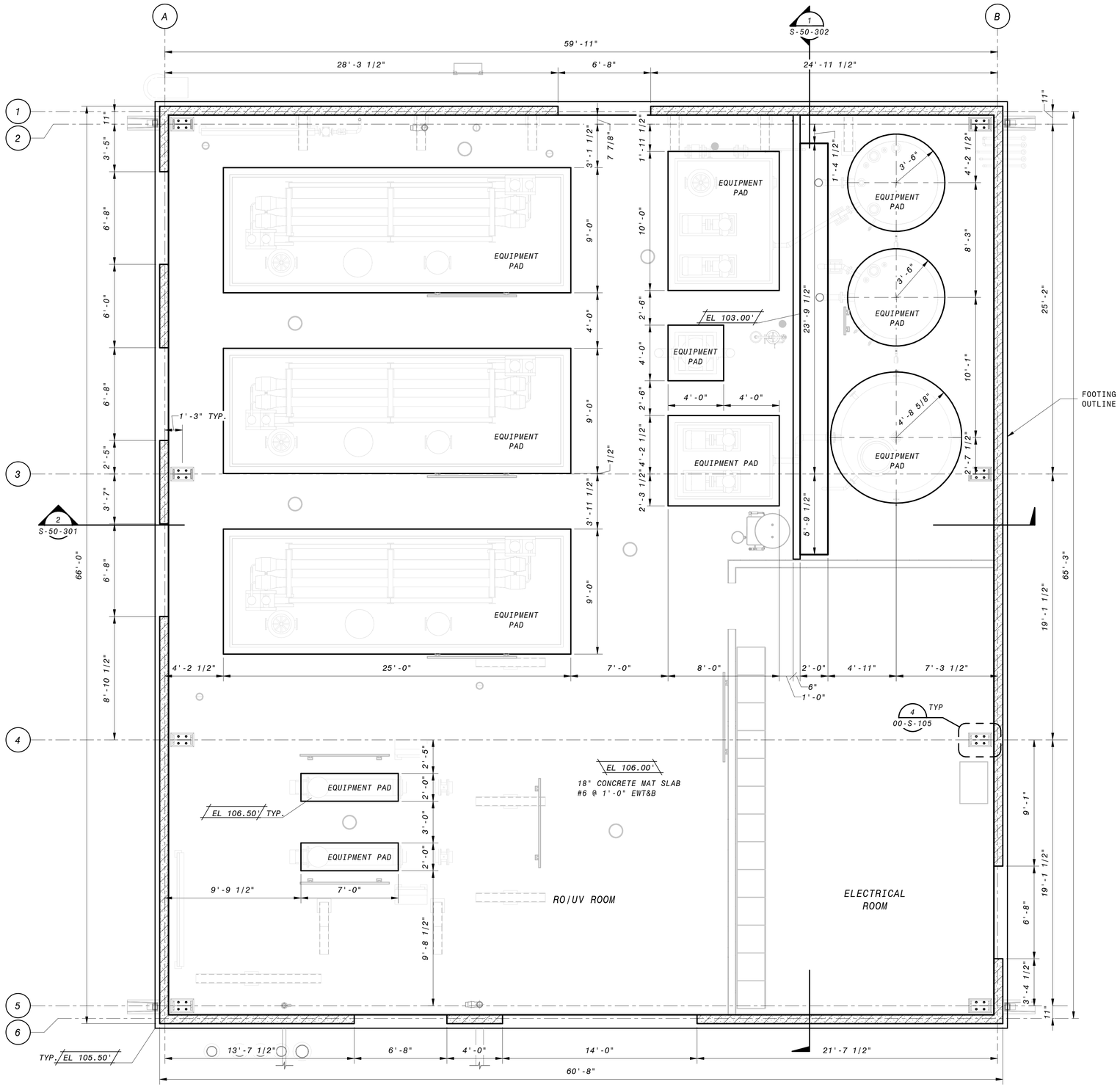

OPERATING FLOOR PLAN

1/4" = 1'-0"

GENERAL NOTES

1. PLEASE SEE SOILS REPORT FOR ADDITIONAL SPECIFICATIONS AND RECOMMENDATIONS. IT IS THE DESIGN-BUILDER'S RESPONSIBILITY TO OBTAIN A COPY OF THE SOILS REPORT FROM THE OWNER OR OWNERS REPRESENTATIVE.
2. PRIOR TO THE DESIGN-BUILDER REQUESTING A BUILDING DEPARTMENT FOUNDATION INSPECTION, THE SOILS ENGINEER SHALL ADVISE THE BUILDING INSPECTOR IN WRITING THAT:

   A) BUILDING PAD WAS PREPARED IN ACCORDANCE WITH SOILS REPORT

   B) UTILITY TRENCHES HAVE BEEN PROPERLY BACKFILLED AND COMPACTED, AND

   C) FOUNDATION EXCAVATIONS, THE SOIL'S EXPANSIVE CHARACTERISTICS AND BEARING CAPACITY CONFORM TO THE SOILS REPORT.
3. SEE GENERAL NOTES & SPECIFICATIONS FOR ADDITIONAL REQUIRMENTS AND MATERIAL SPECIFICATIONS.
4. VERIFY ALL DIMENSIONS PRIOR TO COMMENCEMENT OF CONSTRUCTION.
5. ALL LAP SPLICES TO BE CLASS B PER DETAIL 1/00-S-101
6. SUBMIT EQUIPMENT WEIGHT FOR REVIEW PRIOR TO INSTALLATION. SEE DETAIL 1/00-S-105 FOR TYPICAL EQUIPMENT PADS. LOCATION AND SIZE OF EQUIPMENT PADS TO BE COORDINATED WITH MECHANICAL/ELECTRICAL/PLUMBING DRAWINGS. EQUIPMENT ANCHORAGE PER PROJECT SPECIFICATIONS.
7. REFER TO MECHANICAL/ELECTRICAL/PLUMBING DRAWINGS FOR SIZE AND LOCATIONS OF PIPE PENETRATIONS AND WALL OPENINGS. SEE DETAIL 9/00-S-101 FOR TYPICAL REINFORCEMENT REQUIREMENTS. COORDINATE PIPE PENETRATION SEAL WITH MECHANICAL ENGINEER OF RECORD.
8. COORDINATE LOCATION AND DETAILING FOR ATTACHMENT OF MECANICAL SUPPORTS WITH BUILDING MANUFACTURER AND MECHANICAL ENGINEER OF RECORD PRIOR TO INSTALLATION.

4' 2' 0' 4' 8'

1/4" = 1'-0"

60% SUBMITTAL - NOT FOR CONSTRUCTION

NO.	BY	CHK	APP	DATE	REVISIONS AND RECORD OF USE

Ashley & Vance ENGINEERING, INC

JOINT VENTURE

BLACK & VEATCH

FILANC

CITY OF MORRO BAY
FILANC BLACK & VEATCH DB PROPOSAL
WATER RECLAMATION FACILITY (WRF)

RO/UV BUILDING
STRUCTURAL
PLAN

DESIGNED: I. SHOEBRIDGE
DETAILED: S. BENJAMIN
CHECKED: Checker
APPROVED: Approver
DATE: XX/XX/XXXX

0 1/2 1

IF THIS BAR DOES NOT MEASURE 1" THEN DRAWING IS NOT TO FULL SCALE

PROJECT NO.
81203

S-50-101
SHEET
OF XXX

PLOTTED: 7/29/2019 7:30:00 PM
D400530

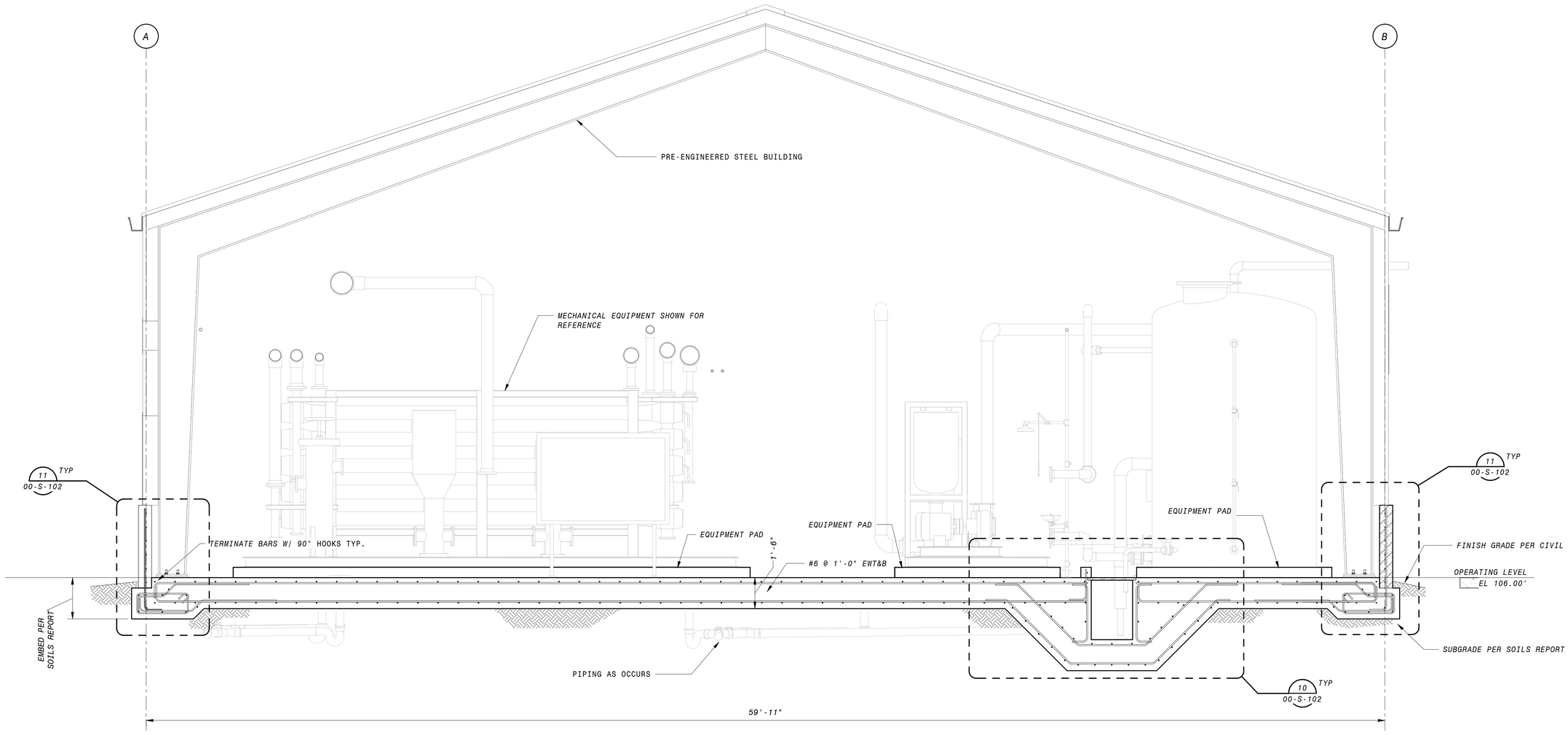

2 SECTION
S-50-101 3/8" = 1'-0"

GENERAL SECTION NOTES

1. FOR GENERAL STRUCTURAL NOTES, SEE SHEETS 00-S-002 AND STANDARD SPECIFICATIONS.
2. REINFORCEMENT CLEAR COVER TO BE 2" EF FOR WALLS, 2" AT TOP OF SLABS, AND 3" AT BOTTOM OF SLABS, TYP., UNO
3. ALL LAP SPLICES TO BE CLASS B PER DETAIL 1/00-S-101.
4. REFER TO MECHANICAL DRAWINGS FOR SIZE AND LOCATIONS OF PIPE PENETRATIONS AND WALL OPENINGS. SEE DETAIL 9/00-S-101 FOR TYPICAL REINFORCEMENT REQUIREMENTS. COORDINATE PIPE PENETRATION SEAL WITH EOR (WHERE OCCURS).
5. COORDINATE EQUIPMENT WEIGHT WITH EOR PRIOR TO INSTALLATION. SEE DETAIL 1/00-S-105 FOR TYPICAL EQUIPMENT ANCHORAGE AND EQUIPMENT PADS.

12" 0' 1' 2' 3' 4' 5' 6' 7'
3/8" = 1'-0"

60% SUBMITTAL - NOT FOR CONSTRUCTION

NO.	BY	CHK	APP	DATE	REVISIONS AND RECORD OF USE

Ashley & Vance ENGINEERING, INC
BLACK & VEATCH
JOINT VENTURE
FILANC

CITY OF MORRO BAY
FILANC BLACK & VEATCH DB PROPOSAL
WATER RECLAMATION FACILITY (WRF)

RO/UV BUILDING
STRUCTURAL
SECTION & DETAILS 1

DESIGNED: I. SHOEBRIDGE
DETAILED: S. BENJAMIN
CHECKED: Checker
APPROVED: Approver
DATE: XX/XX/XXXX

0 1/2 1
IF THIS BAR DOES NOT MEASURE 1" THEN DRAWING IS NOT TO FULL SCALE

PROJECT NO.
81203

S-50-301
SHEET
OF XXX

PLOTTED: 7/29/2019 7:30:01 PM
D400530

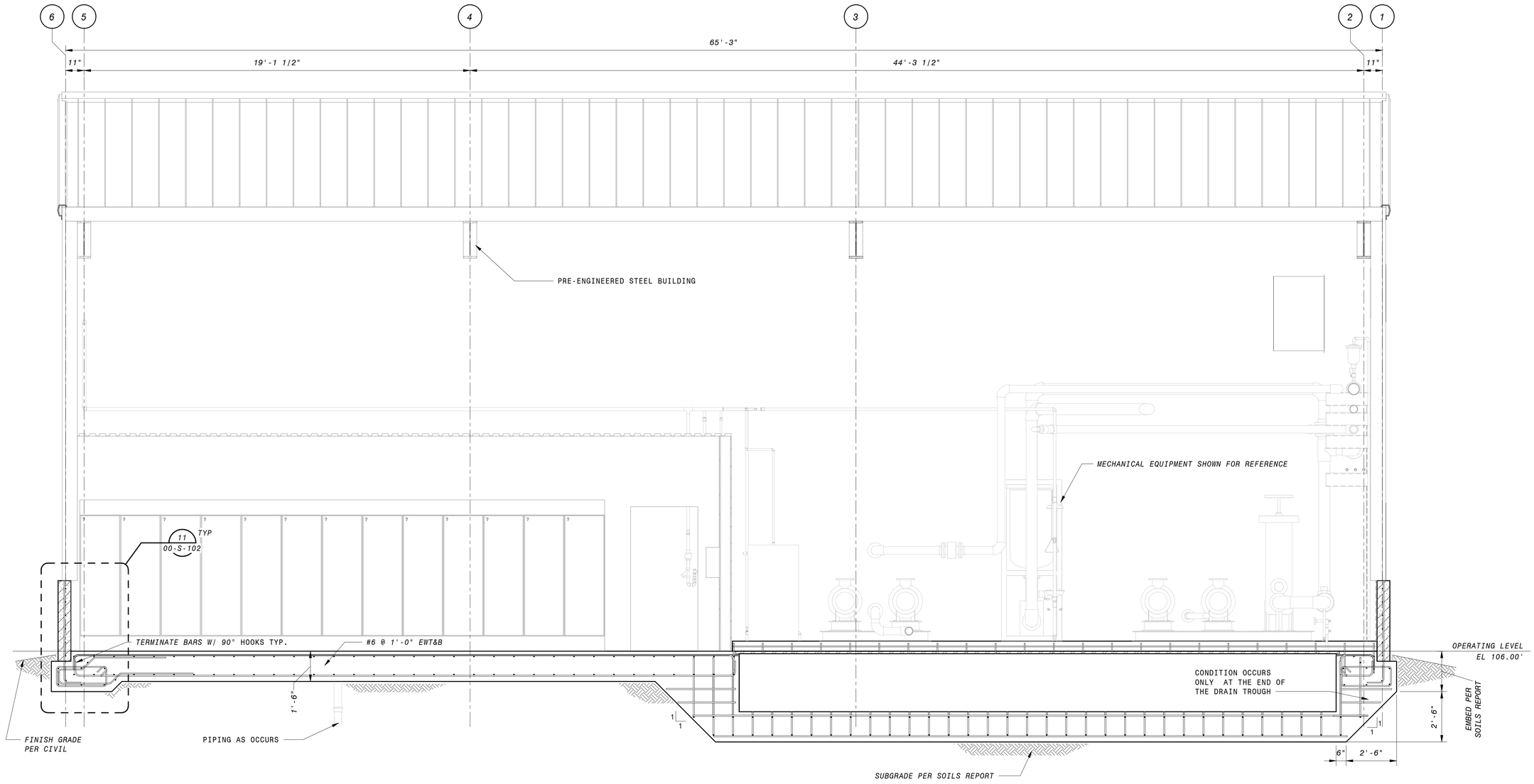

1 SECTION
S-50-101 3/8" = 1'-0"

GENERAL SECTION NOTES

1. FOR GENERAL STRUCTURAL NOTES, SEE SHEETS 00-S-002 AND STANDARD SPECIFICATIONS.
2. REINFORCEMENT CLEAR COVER TO BE 2" EF FOR WALLS, 2" AT TOP OF SLABS, AND 3" AT BOTTOM OF SLABS, TYP., UNO
3. ALL LAP SPLICES TO BE CLASS B PER DETAIL 1/00-S-101.
4. REFER TO MECHANICAL DRAWINGS FOR SIZE AND LOCATIONS OF PIPE PENETRATIONS AND WALL OPENINGS. SEE DETAIL 9/00-S-101 FOR TYPICAL REINFORCEMENT REQUIREMENTS. COORDINATE PIPE PENETRATION SEAL WITH EOR (WHERE OCCURS).
5. COORDINATE EQUIPMENT WEIGHT WITH EOR PRIOR TO INSTALLATION. SEE DETAIL 1/00-S-105 FOR TYPICAL EQUIPMENT ANCHORAGE AND EQUIPMENT PADS.

12" 0' 1' 2' 3' 4' 5' 6' 7'
3/8" = 1'-0"

60% SUBMITTAL - NOT FOR CONSTRUCTION

NO.	BY	CHK	APP	DATE	REVISIONS AND RECORD OF USE

Ashley & Vance ENGINEERING, INC
JOINT VENTURE
BLACK & VEATCH
FILANC

CITY OF MORRO BAY
FILANC BLACK & VEATCH DB PROPOSAL
WATER RECLAMATION FACILITY (WRF)

RO/UV BUILDING
STRUCTURAL
SECTION & DETAILS 2

DESIGNED: I. SHOEBRIDGE
DETAILED: S. BENJAMIN
CHECKED: Checker
APPROVED: Approver
DATE: XX/XX/XXXX

0 1/2 1
IF THIS BAR DOES NOT MEASURE 1" THEN DRAWING IS NOT TO FULL SCALE

PROJECT NO.
81203

S-50-302
SHEET
OF XXX

PLOTTED: 7/19/2019 7:30:02 PM
D400530

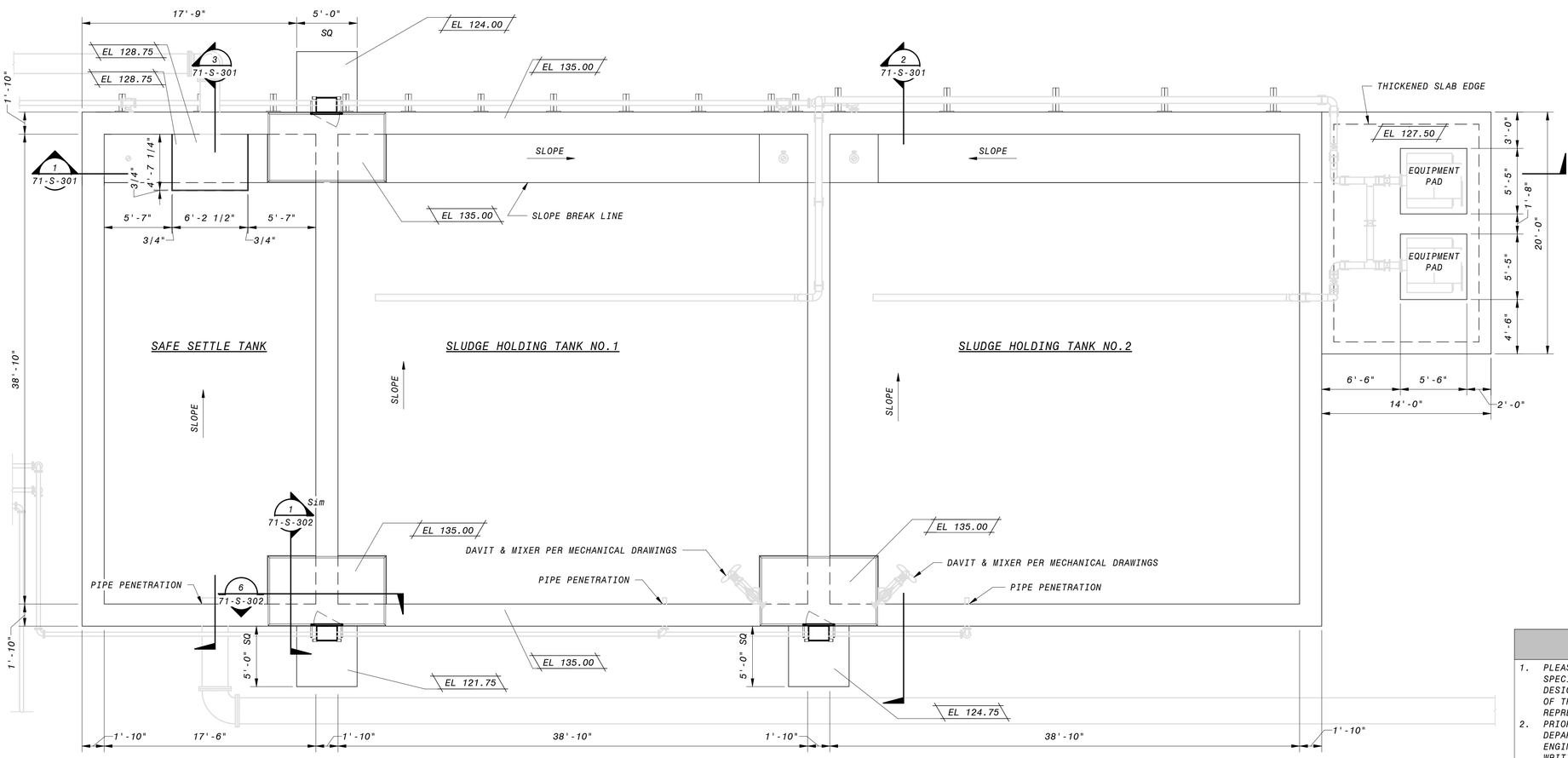

OPERATING LEVEL STRUCTURAL FLOOR PLAN

3/16" = 1'-0"

GENERAL NOTES

1. PLEASE SEE SOILS REPORT FOR ADDITIONAL SPECIFICATIONS AND RECOMMENDATIONS. IT IS THE DESIGN BUILDER'S RESPONSIBILITY TO OBTAIN A COPY OF THE SOILS REPORT FROM THE OWNER OR OWNER'S REPRESENTATIVE.
2. PRIOR TO THE DESIGN BUILDER REQUESTING A BUILDING DEPARTMENT FOUNDATION INSPECTION, THE SOILS ENGINEER SHALL ADVISE THE BUILDING INSPECTOR IN WRITING THAT:
   A. BUILDING PAD WAS PREPARED IN ACCORDANCE WITH SOILS REPORT
   B. UTILITY TRENCHES HAVE BEEN PROPERLY BACKFILLED AND COMPACTED, AND
   C. FOUNDATION EXCAVATIONS, THE SOIL'S EXPANSIVE CHARACTERISTICS AND BEARING CAPACITY CONFORM TO THE SOILS REPORT.
3. FOR GENERAL STRUCTURAL NOTES, SEE SHEETS 00-S-002 AND STANDARD SPECIFICATIONS.
4. VERIFY ALL DIMENSIONS PRIOR TO COMMENCEMENT OF CONSTRUCTION.
5. ALL LAP SPLICES TO BE CLASS B PER DETAIL 1/00-S-101
6. SUBMIT EQUIPMENT WEIGHT FOR REVIEW PRIOR TO INSTALLATION. SEE DETAIL 1/00-S-105 FOR TYPICAL EQUIPMENT PADS. LOCATION AND SIZE OF EQUIPMENT PADS TO BE COORDINATED WITH MECHANICAL/ ELECTRICAL/ PLUMBING DRAWINGS. EQUIPMENT ANCHORAGE PER PROJECT SPECIFICATIONS.
7. REFER TO MECHANICAL/ELECTRICAL/PLUMBING DRAWINGS FOR SIZE AND LOCATIONS OF PIPE PENETRATIONS AND WALL OPENINGS. SEE DETAIL 9/00-S-101 FOR TYPICAL REINFORCEMENT REQUIREMENTS. COORDINATE PIPE PENETRATION SEAL WITH MECHANICAL ENGINEER OF RECORD.
8. FOR TYPICAL MAT SLAB EDGE, REFER TO DETAIL 13/00-S-102
9. PROVIDE COMPLETE DESIGN PACKAGE FOR DAVIT AND MIXERS.

6" 4' 2' 0' 5' 10'

3/16" = 1'-0"

60% SUBMITTAL - NOT FOR CONSTRUCTION

NO.	BY	CHK	APP	DATE	REVISIONS AND RECORD OF USE

Ashley & Vance ENGINEERING, INC
JOINT VENTURE
FILANC
BLACK & VEATCH

CITY OF MORRO BAY
FILANC BLACK & VEATCH DB PROPOSAL
RECLAMATION FACILITY (WRF)

SLUDGE HOLDING TANKS AND SAFE SETTLE TANK
STRUCTURAL
PLAN

DESIGNED: I. SHOEBRIDGE
DETAILED: S. BENJAMIN
CHECKED: Checker
APPROVED: Approver
DATE:

0 1/2 1
IF THIS BAR DOES NOT MEASURE 1" THEN DRAWING IS NOT TO FULL SCALE

PROJECT NO.
400530

71-S-101
SHEET
OF

PLOTTED: 7/29/2019 2:20:51 PM
D400530

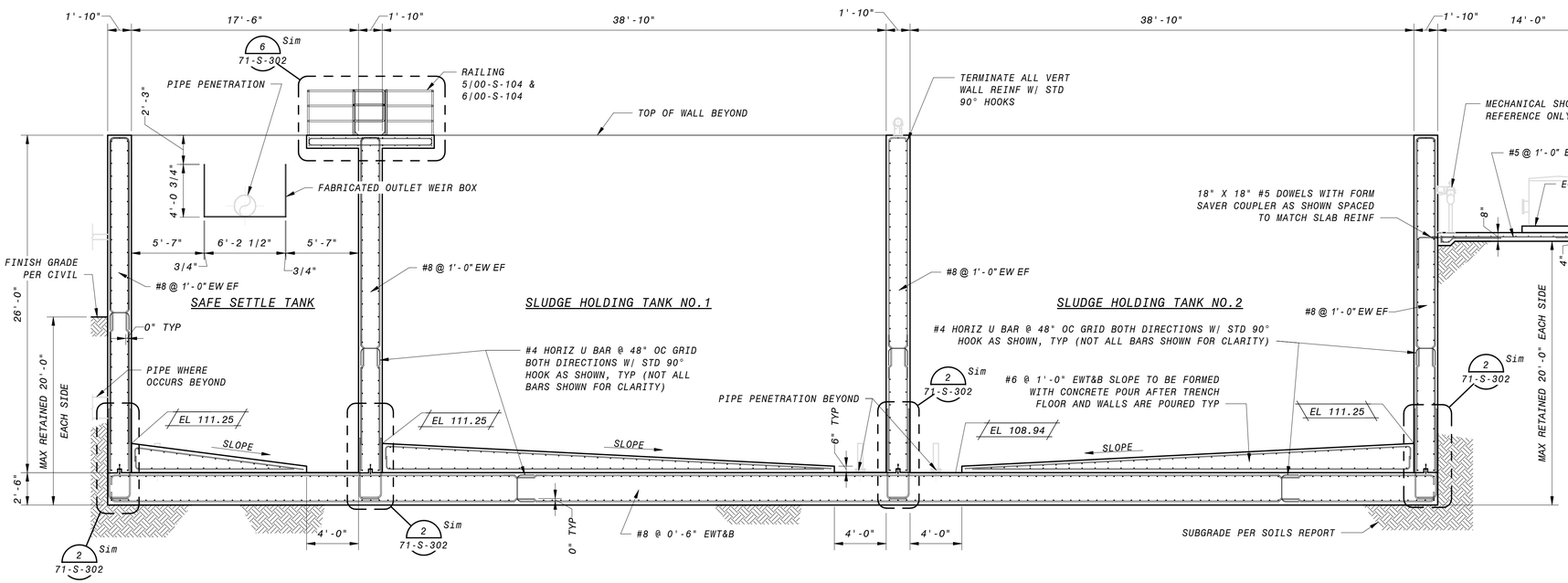

1 SECTION
71-S-101 3/16" = 1'-0"

GENERAL SECTION NOTES

1. FOR GENERAL STRUCTURAL NOTES, SEE SHEETS 00-S-002 AND STANDARD SPECIFICATIONS.
2. AT WALLS 12" THICK OR LESS, PROVIDE A 6" WATERSTOP, UNO. AT WALLS GREATER THAN 12" THICK, PROVIDE A 9" WATERSTOP, UNO. REFER TO DETAIL 2 ON SHEET 00-S-103.
3. REINFORCEMENT CLEAR COVER TO BE 2" EF FOR WALLS, 2" AT TOP OF SLABS, AND 3" AT BOTTOM OF SLABS, TYP., UNO
4. ALL LAP SPLICES TO BE CLASS B PER DETAIL 1/00-S-101.
5. REFER TO MECHANICAL/ ELECTRICAL/ PLUMBING DRAWINGS FOR SIZE AND LOCATIONS OF PIPE PENETRATIONS AND WALL OPENINGS. SEE DETAIL 9/00-S-101 FOR TYPICAL REINFORCEMENT REQUIREMENTS. COORDINATE PIPE PENETRATION SEAL WITH MECHANICAL ENGINEER OF RECORD.
6. SUBMIT EQUIPMENT WEIGHT FOR REVIEW PRIOR TO INSTALLATION. SEE DETAIL 1/00-S-105 FOR TYPICAL EQUIPMENT PADS. LOCATION AND SIZE OF EQUIPMENT PADS TO BE COORDINATED WITH MECHANICAL/ ELECTRICAL/ PLUMBING DRAWINGS. EQUIPMENT ANCHORAGE PER PROJECT SPECIFICATIONS.
7. FOR TYPICAL MAT SLAB EDGE, REFER TO DETAIL 13/00-S-102.
8. PROVIDE COMPLETE DESIGN PACKAGE FOR DAVIT AND MIXERS.

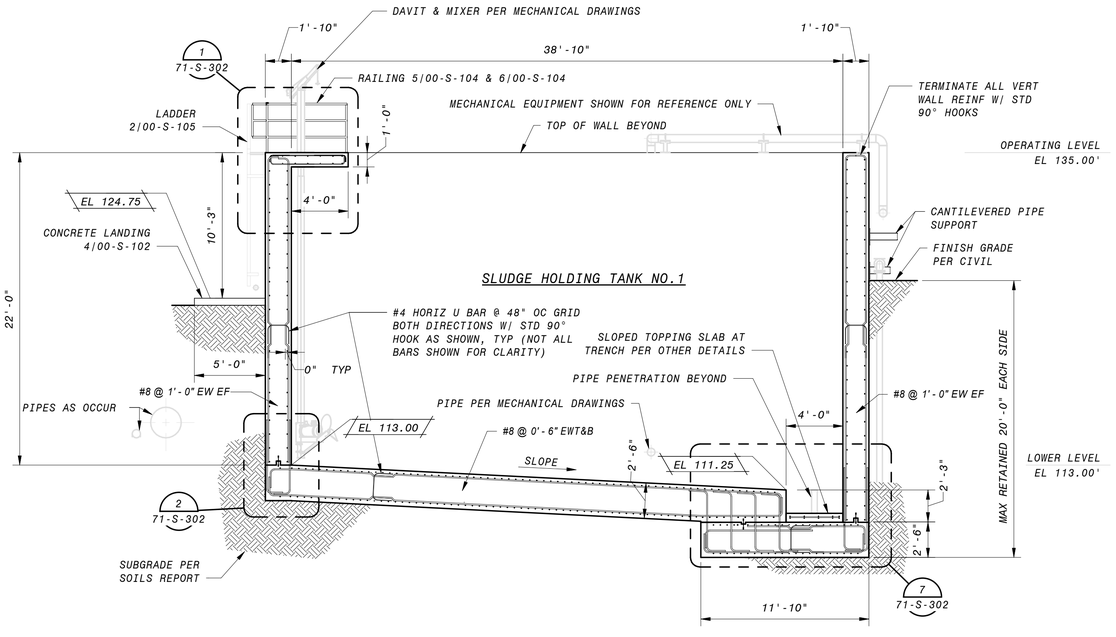

2 SECTION
71-S-101 3/16" = 1'-0"

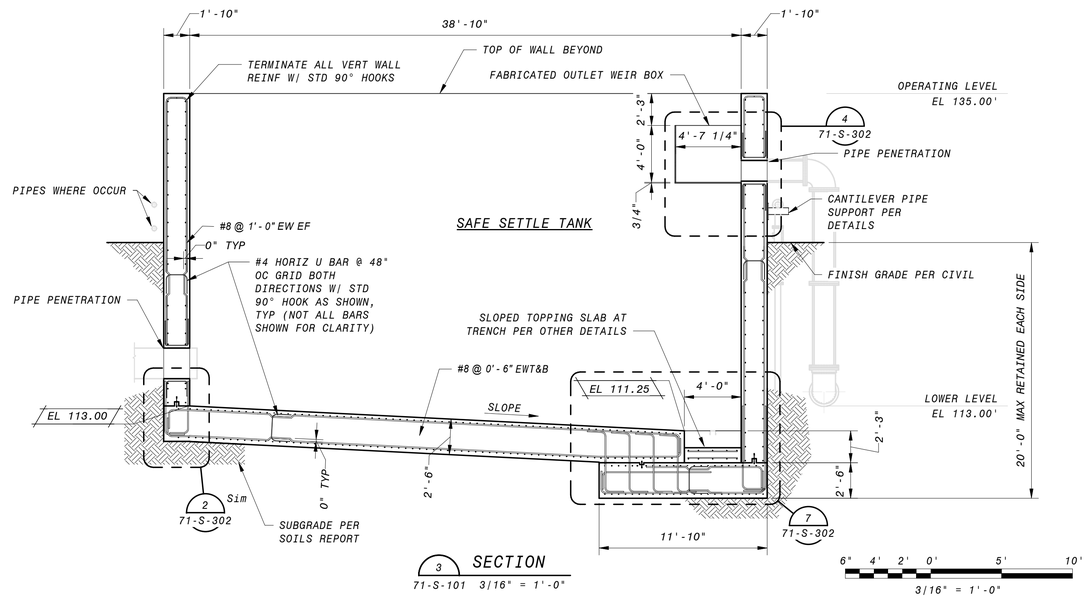

3 SECTION
71-S-101 3/16" = 1'-0"

6" 4' 2' 0' 5' 10'
3/16" = 1'-0"

60% SUBMITTAL - NOT FOR CONSTRUCTION

NO.	BY	CHK	APP	DATE	REVISIONS AND RECORD OF USE

Ashley & Vance ENGINEERING, INC
JOINT VENTURE
BLACK & VEATCH
FILANC

CITY OF MORRO BAY
FILANC BLACK & VEATCH DB PROPOSAL
RECLAMATION FACILITY (WRF)

SLUDGE HOLDING TANKS AND SAFE SETTLE
STRUCTURAL
SECTIONS & DETAILS 1

DESIGNED: I. SHOEBRIDGE
DETAILED: S. BENJAMIN
CHECKED: Checker
APPROVED: Approver
DATE:

0 1/2 1
IF THIS BAR DOES NOT MEASURE 1" THEN DRAWING IS NOT TO FULL SCALE

PROJECT NO.
400530

71-S-301
SHEET
OF

PLOTTED: 7/29/2019 2:20:52 PM
D400530

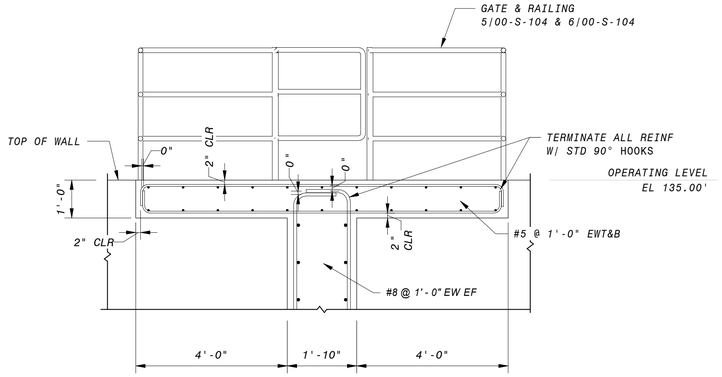

6 PLATFORM TO INTERIOR WALL
71-S-101 1/2" = 1'-0"

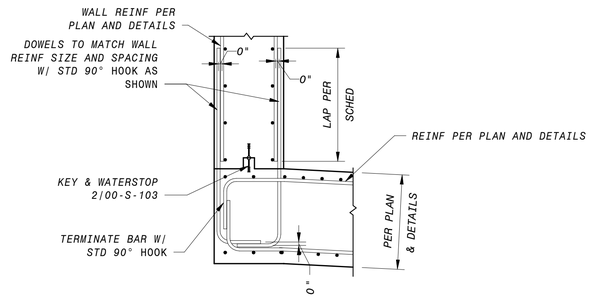

2 TYP WALL TO SLAB DETAIL
71-S-301 1/2" = 1'-0"

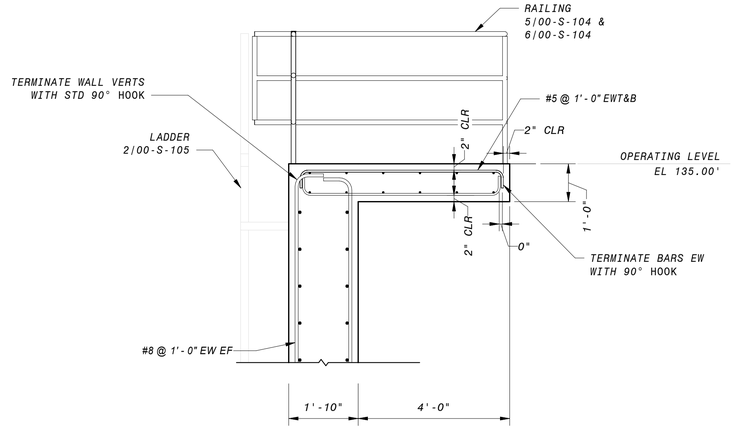

1 PLATFORM TO EXTERIOR WALL
71-S-101 1/2" = 1'-0"

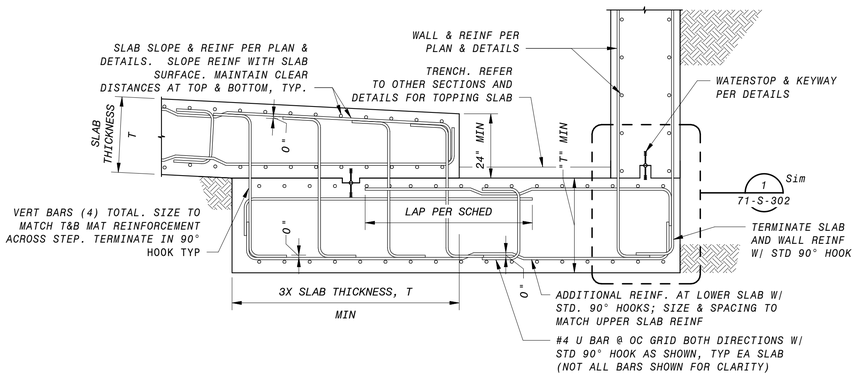

7 TRENCH DETAIL AT SLUGE TANKS
71-S-301 NO SCALE

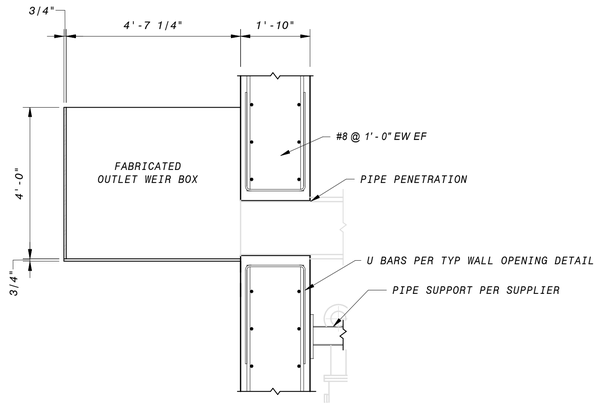

4 PIPE PENETRATION AT FABRICATED OUTLET BOX
71-S-301 1/2" = 1'-0"

GENERAL SECTION NOTES

1. FOR GENERAL STRUCTURAL NOTES, SEE SHEET 00-S-002 AND STANDARD SPECIFICATIONS.
2. AT WALLS 12" THICK OR LESS, PROVIDE A 6" WATERSTOP, UNO. AT WALLS GREATER THAN 12" THICK, PROVIDE A 9" WATERSTOP, UNO. REFER TO DETAIL 2 ON SHEET 00-S-103.
3. REINFORCEMENT CLEAR COVER TO BE 2" EF FOR WALLS, 2" AT TOP OF SLABS, AND 3" AT BOTTOM OF SLABS, TYP., UNO
4. ALL LAP SPLICES TO BE CLASS B PER DETAIL 1/00-S-101.
5. REFER TO MECHANICAL DRAWINGS FOR SIZE AND LOCATIONS OF PIPE PENETRATIONS AND WALL OPENINGS. SEE DETAIL 9/00-S-101 FOR TYPICAL REINFORCEMENT REQUIREMENTS. COORDINATE PIPE PENETRATION SEAL WITH EOR (WHERE OCCURS).

60% SUBMITTAL - NOT FOR CONSTRUCTION

NO.	BY	CHK	APP	DATE	REVISIONS AND RECORD OF USE

Ashley & Vance ENGINEERING, INC
JOINT VENTURE
BLACK & VEATCH
FILANC

CITY OF MORRO BAY
FILANC BLACK & VEATCH DB PROPOSAL
RECLAMATION FACILITY (WRF)

SLUDGE HOLDING TANKS AND SAFE SETTLE
STRUCTURAL
SECTIONS & DETAILS 2

DESIGNED: I. SHOEBRIDGE
DETAILED: S. BENJAMIN
CHECKED: Checker
APPROVED: Approver
DATE:

0 1/2 1
IF THIS BAR DOES NOT MEASURE 1" THEN DRAWING IS NOT TO FULL SCALE

PROJECT NO.
400530

71-S-302
SHEET
OF

PLOTTED: 7/29/2019 2:20:52 PM
D400530

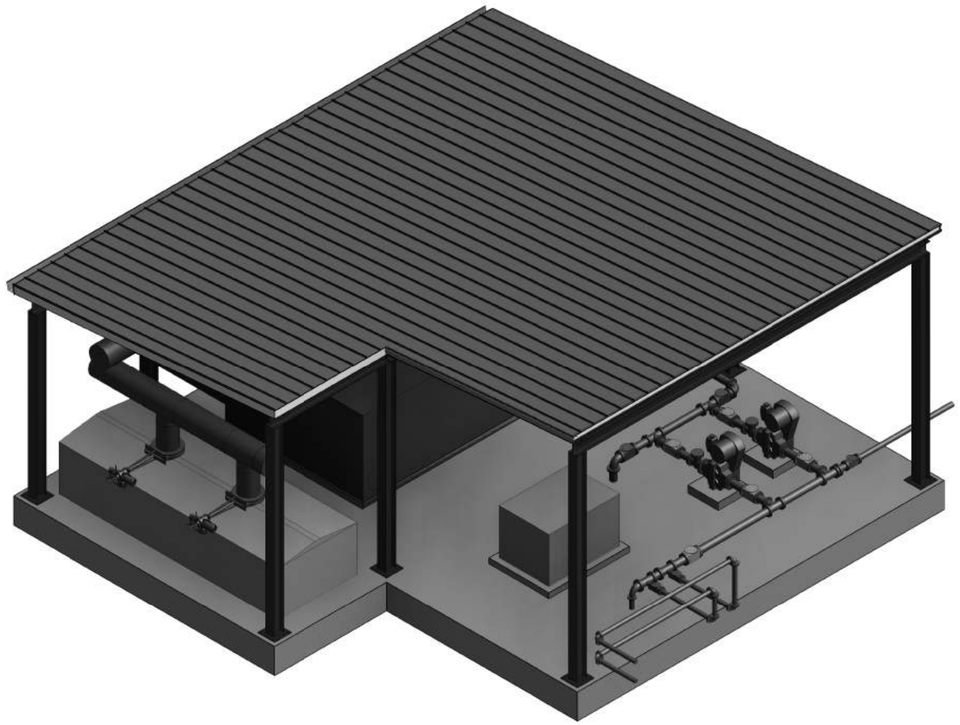

3D VIEW - NORTH

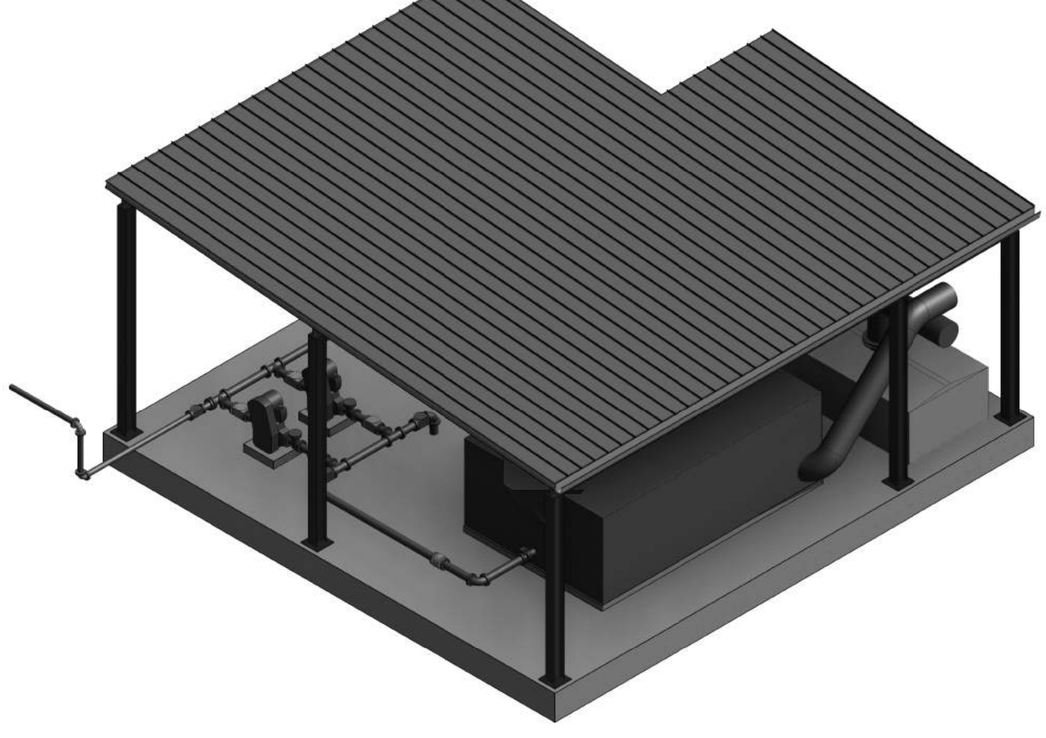

3D VIEW - SOUTH

60% SUBMITTAL - NOT FOR CONSTRUCTION

DATE	REVISIONS AND RECORD OF USE	NO.	BY	CHK	APP

Ashley & Vance ENGINEERING, INC

JOINT VENTURE

FILANC

BLACK & VEATCH

CITY OF MORRO BAY
FILANC BLACK & VEATCH DB PROPOSAL
RECLAMATION FACILITY (WRF)

RESIDUALS AREA - DEWATERING FACILITY
STRUCTURAL
3D VIEWS

DESIGNED: Designer
DETAILED: Author
CHECKED: Checker
APPROVED: Approver
DATE:

0 1/2 1

IF THIS BAR DOES NOT MEASURE 1" THEN DRAWING IS NOT TO FULL SCALE

PROJECT NO.
400530

72-S-001
SHEET
OF

PLOTTED: 7/29/2019 7:53:51 PM
D400530

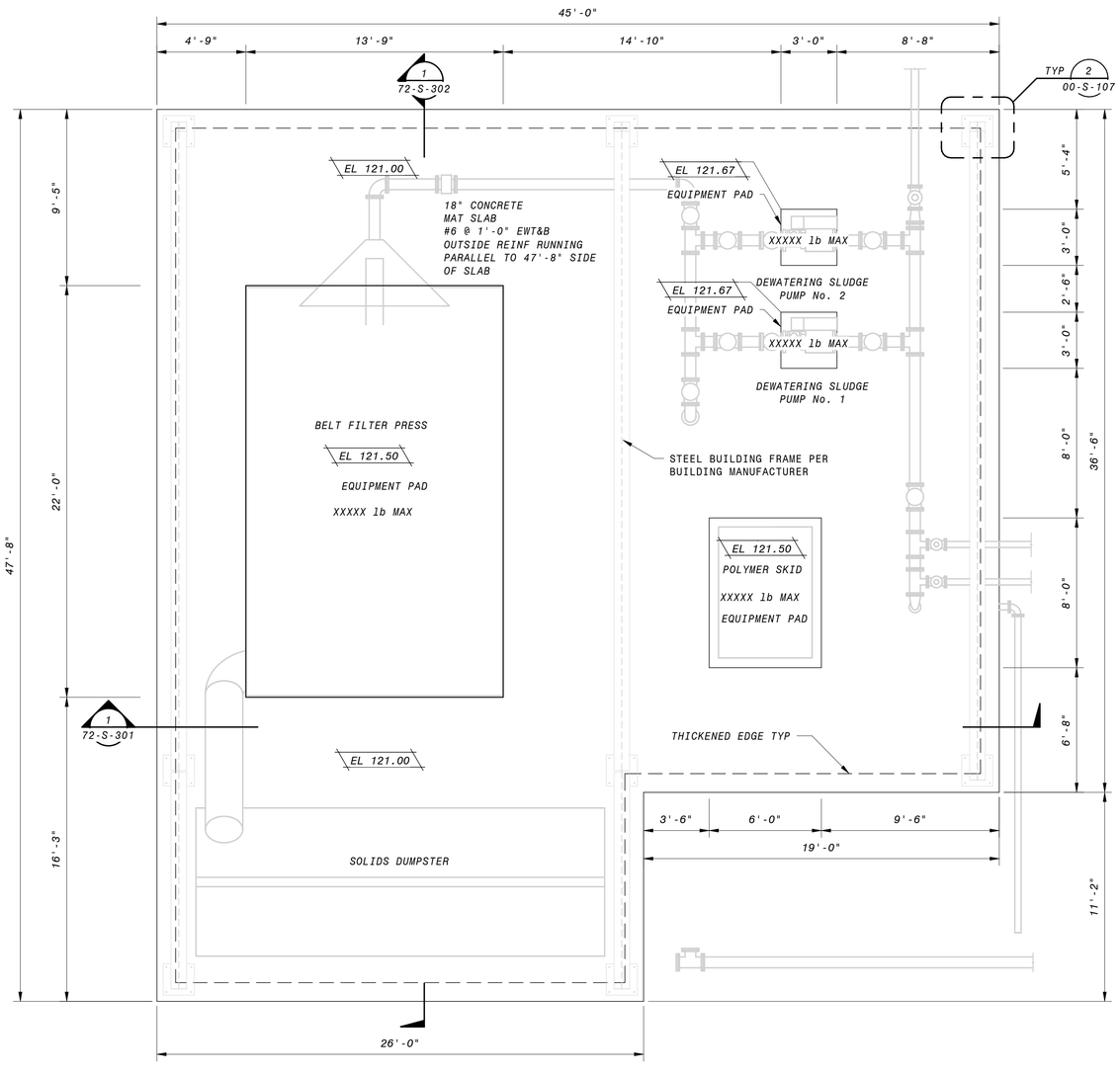

OPERATING LEVEL STRUCTURAL FLOOR PLAN

1/4" = 1'-0"

GENERAL NOTES

1. PLEASE SEE SOILS REPORT FOR ADDITIONAL SPECIFICATIONS AND RECOMMENDATIONS. IT IS THE DESIGN-BUILDER'S RESPONSIBILITY TO OBTAIN A COPY OF THE SOILS REPORT FROM THE OWNER OR OWNERS REPRESENTATIVE.
2. PRIOR TO THE DESIGN-BUILDER REQUESTING A BUILDING DEPARTMENT FOUNDATION INSPECTION, THE SOILS ENGINEER SHALL ADVISE THE BUILDING INSPECTOR IN WRITING THAT:
   A) BUILDING PAD WAS PREPARED IN ACCORDANCE WITH SOILS REPORT
   B) UTILITY TRENCHES HAVE BEEN PROPERLY BACKFILLED AND COMPACTED, AND
   C) FOUNDATION EXCAVATIONS, THE SOIL'S EXPANSIVE CHARACTERISTICS AND BEARING CAPACITY CONFORM TO THE SOILS REPORT.
3. SEE GENERAL NOTES & SPECIFICATIONS FOR ADDITIONAL REQUIRMENTS AND MATERIAL SPECIFICATIONS.
4. VERIFY ALL DIMENSIONS PRIOR TO COMMENCEMENT OF CONSTRUCTION.
5. ALL LAP SPLICES TO BE CLASS B PER DETAIL 1/00-S-101
6. SUBMIT EQUIPMENT WEIGHT FOR REVIEW PRIOR TO INSTALLATION. SEE DETAIL 1/00-S-105 FOR TYPICAL EQUIPMENT PADS. LOCATION AND SIZE OF EQUIPMENT PADS TO BE COORDINATED WITH MECHANICAL/ELECTRICAL/PLUMBING DRAWINGS. EQUIPMENT ANCHORAGE PER PROJECT SPECIFICATIONS.
7. REFER TO MECHANICAL/ELECTRICAL/PLUMBING DRAWINGS FOR SIZE AND LOCATIONS OF PIPE PENETRATIONS AND WALL OPENINGS. SEE DETAIL 9/00-S-101 FOR TYPICAL REINFORCEMENT REQUIREMENTS. COORDINATE PIPE PENETRATION SEAL WITH MECHANICAL ENGINEER OF RECORD.
8. COORDINATE LOCATION AND DETAILING FOR ATTACHMENT OF MECANICAL SUPPORTS WITH BUILDING MANUFACTURER AND MECHANICAL ENGINEER OF RECORD PRIOR TO INSTALLATION.

4' 2' 0' 4' 8'

1/4" = 1'-0"

60% SUBMITTAL - NOT FOR CONSTRUCTION

NO.	BY	CHK	APP	DATE	REVISIONS AND RECORD OF USE

Ashley & Vance ENGINEERING, INC

JOINT VENTURE

BLACK & VEATCH

FILANC

CITY OF MORRO BAY
FILANC BLACK & VEATCH DB PROPOSAL
RECLAMATION FACILITY (WRF)

RESIDUALS AREA - DEWATERING FACILITY
STRUCTURAL
PLAN

DESIGNED: I. SHOEBRIDGE
DETAILED: S. BENJAMIN
CHECKED: Checker
APPROVED: Approver
DATE:

0 1/2 1

IF THIS BAR DOES NOT MEASURE 1" THEN DRAWING IS NOT TO FULL SCALE

PROJECT NO.
400530

72-S-101
SHEET
OF

PLOTTED: 7/29/2019 7:53:51 PM
D400530

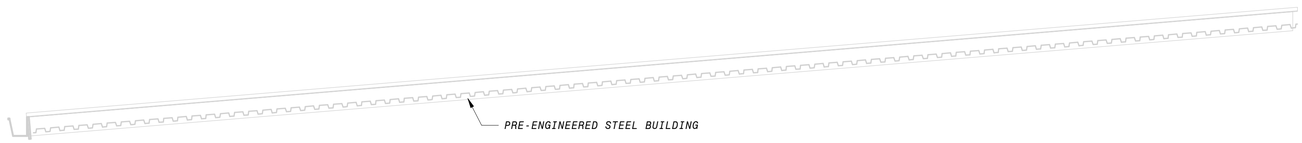

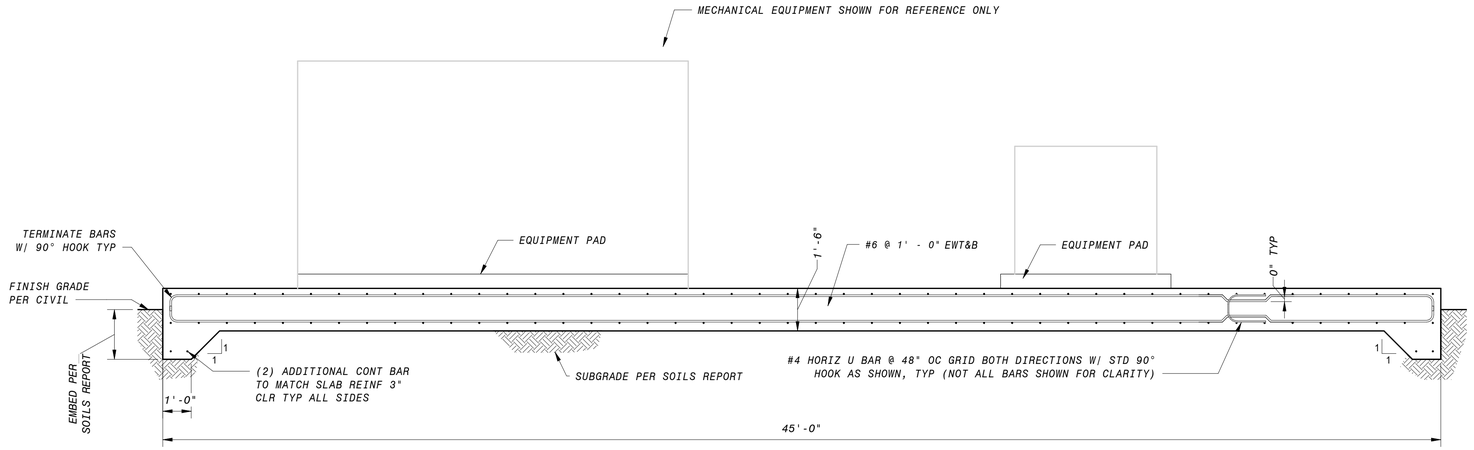

1 SECTION
72-S-101 3/8" = 1'-0"

GENERAL SECTION NOTES

1. FOR GENERAL STRUCTURAL NOTES, SEE SHEETS S-00-002 AND STANDARD SPECIFICATIONS.
2. REINFORCEMENT CLEAR COVER TO BE 2" EF FOR WALLS, 2" AT TOP OF SLABS, AND 3" AT BOTTOM OF SLABS, TYP., UNO
3. ALL LAP SPLICES TO BE CLASS B PER DETAIL 1/S-00-101.
4. REFER TO MECHANICAL DRAWINGS FOR SIZE AND LOCATIONS OF PIPE PENETRATIONS AND OPENINGS. SEE DETAIL 9/00-S-101 FOR TYPICAL REINFORCEMENT REQUIREMENTS. COORDINATE PIPE PENETRATION SEAL WITH EOR (WHERE OCCURS).
5. COORDINATE EQUIPMENT WEIGHT WITH EOR PRIOR TO INSTALLATION. SEE DETAIL 1/00-S-105 FOR TYPICAL EQUIPMENT ANCHORAGE AND EQUIPMENT PADS.

12" 0' 1' 2' 3' 4' 5' 6' 7'
3/8" = 1'-0"

60% SUBMITTAL - NOT FOR CONSTRUCTION

NO.	BY	CHK	APP	DATE	REVISIONS AND RECORD OF USE

Ashley & Vance ENGINEERING, INC
JOINT VENTURE
BLACK & VEATCH
FILANC

CITY OF MORRO BAY
FILANC BLACK & VEATCH DB PROPOSAL
RECLAMATION FACILITY (WRF)

RESIDUALS AREA - DEWATERING FACILITY
STRUCTURAL
SECTIONS & DETAILS 1

DESIGNED: I. SHOEBRIDGE
DETAILED: S. BENJAMIN
CHECKED: Checker
APPROVED: Approver
DATE:

0 1/2 1
IF THIS BAR DOES NOT MEASURE 1" THEN DRAWING IS NOT TO FULL SCALE

PROJECT NO. 400530

72-S-301
SHEET OF

PLOTTED: 7/29/2019 7:53:51 PM
D400530

GENERAL SECTION NOTES

1. FOR GENERAL STRUCTURAL NOTES, SEE SHEETS S-00-002 AND STANDARD SPECIFICATIONS.
2. REINFORCEMENT CLEAR COVER TO BE 2" EF FOR WALLS, 2" AT TOP OF SLABS, AND 3" AT BOTTOM OF SLABS, TYP., UNO
3. ALL LAP SPLICES TO BE CLASS B PER DETAIL 1/S-00-101.
4. REFER TO MECHANICAL DRAWINGS FOR SIZE AND LOCATIONS OF PIPE PENETRATIONS AND OPENINGS.
   SEE DETAIL 9/00-S-101 FOR TYPICAL REINFORCEMENT REQUIREMENTS. COORDINATE PIPE PENETRATION SEAL WITH EOR (WHERE OCCURS).
5. COORDINATE EQUIPMENT WEIGHT WITH EOR PRIOR TO INSTALLATION. SEE DETAIL 1/00-S-105 FOR TYPICAL EQUIPMENT ANCHORAGE AND EQUIPMENT PADS.

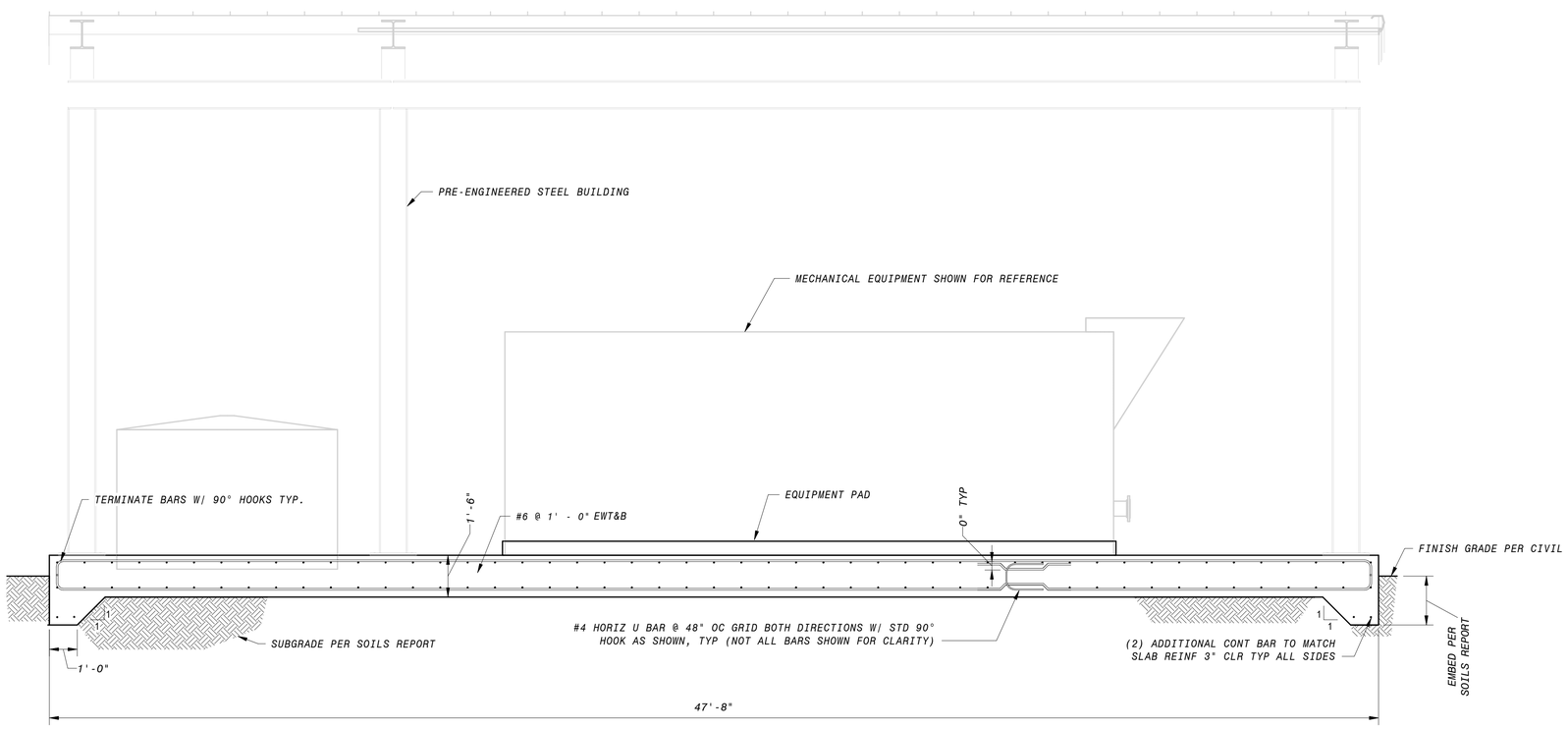

1 SECTION
72-S-101 3/8" = 1'-0"

12" 0' 1' 2' 3' 4' 5' 6' 7'
3/8" = 1'-0"

60% SUBMITTAL - NOT FOR CONSTRUCTION

NO.	BY	CHK	APP	DATE	REVISIONS AND RECORD OF USE

Ashley & Vance ENGINEERING, INC
JOINT VENTURE
BLACK & VEATCH
FILANC

CITY OF MORRO BAY
FILANC BLACK & VEATCH DB PROPOSAL
RECLAMATION FACILITY (WRF)

RESIDUALS AREA - DEWATERING FACILITY
STRUCTURAL
SECTIONS & DETAILS 2

DESIGNED: I. SHOEBRIDGE
DETAILED: S. BENJAMIN
CHECKED: Checker
APPROVED: Approver
DATE:

0 1/2 1
IF THIS BAR DOES NOT MEASURE 1" THEN DRAWING IS NOT TO FULL SCALE

PROJECT NO.
400530

72-S-302
SHEET
OF

PLOTTED: 7/29/2019 7:53:52 PM
D400530

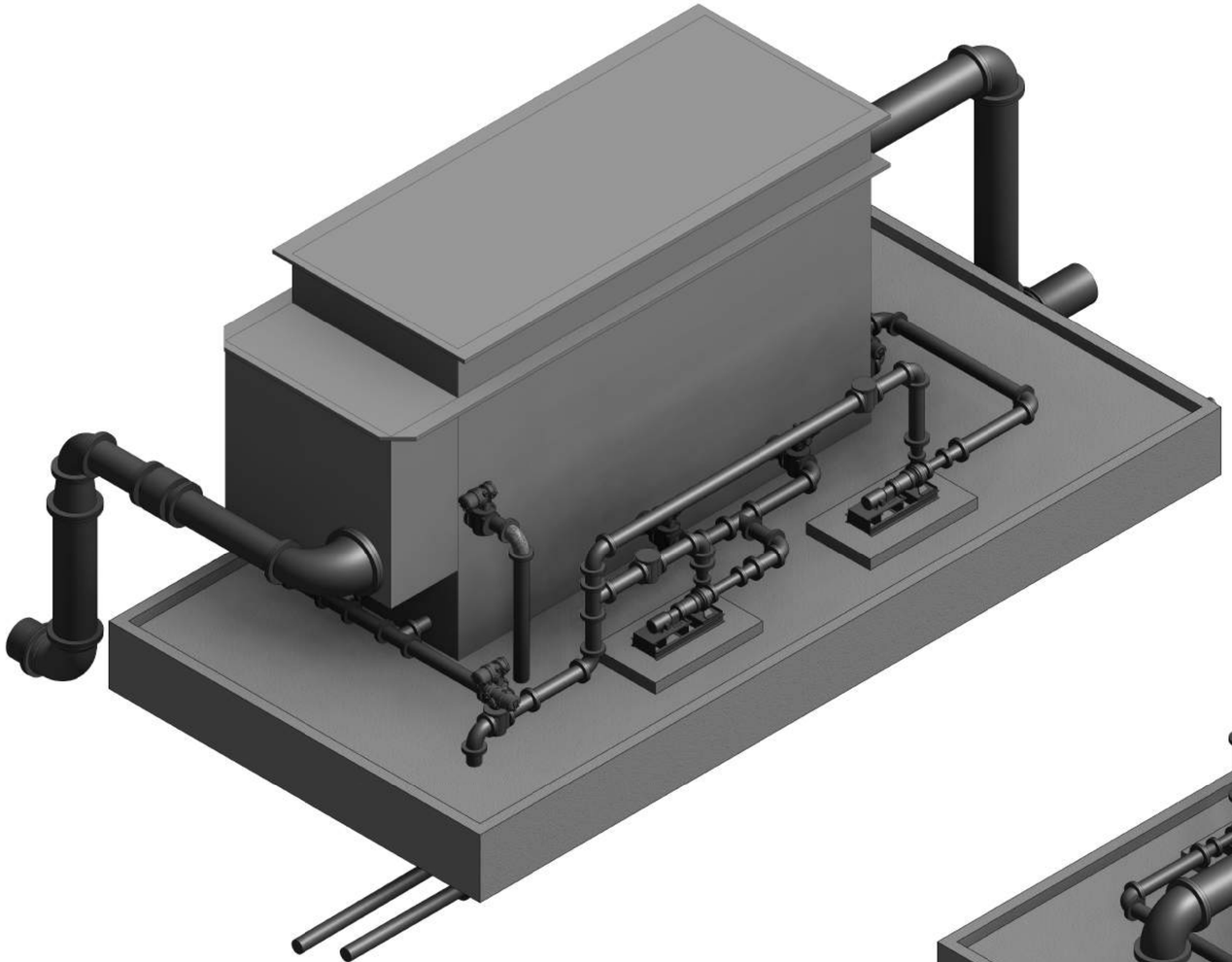

3D VIEW - NORTH

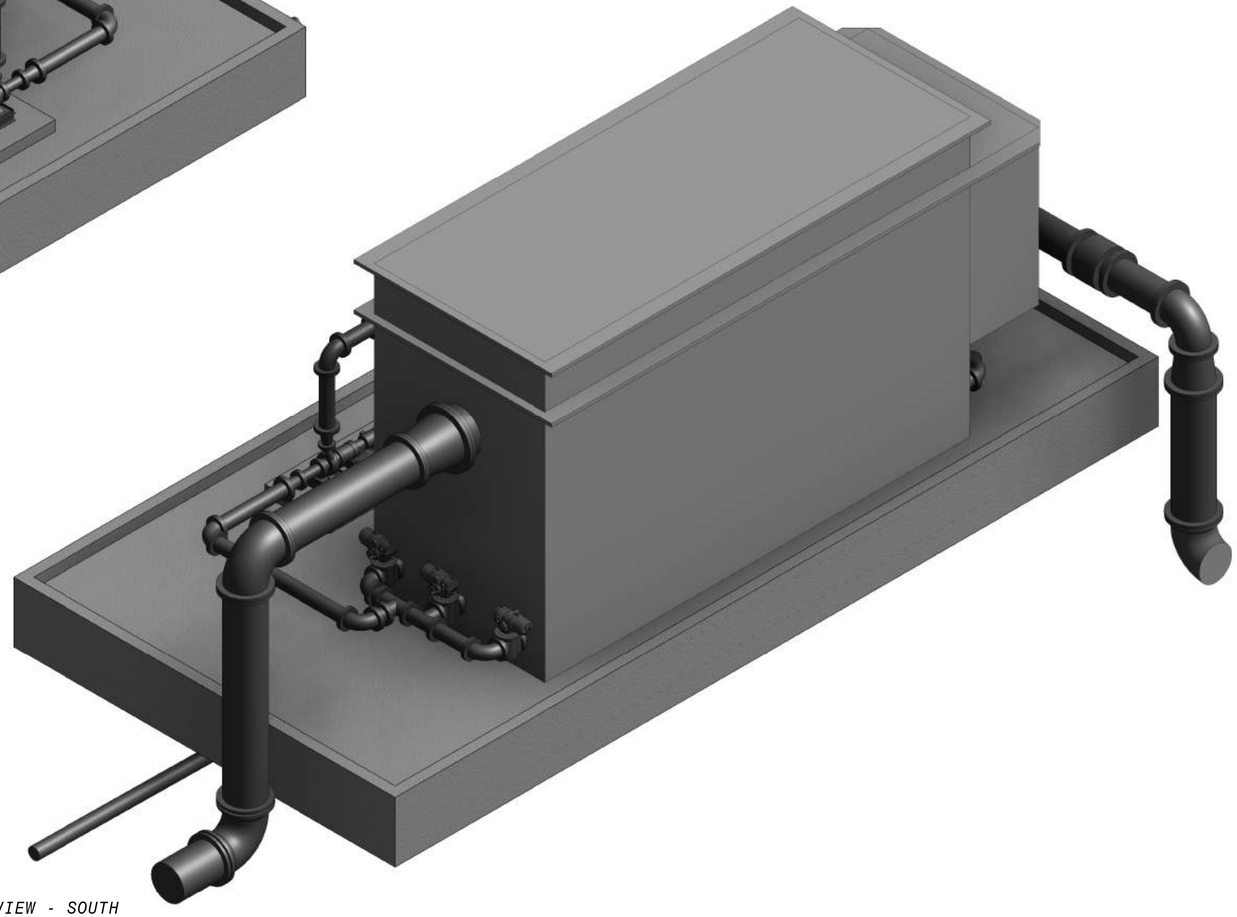

3D VIEW - SOUTH

60% SUBMITTAL- NOT FOR CONSTRUCTION

DATE	REVISIONS AND RECORD OF USE	NO.	BY	CHK	APP

Ashley & Vance ENGINEERING, INC

JOINT VENTURE

FILANC

BLACK & VEATCH

CITY OF MORRO BAY
FILANC BLACK & VEATCH DB PROPOSAL
MORRO BAY WRF

SAFE FILTER AREA
STRUCTURAL
3D VIEWS

DESIGNED: Designer
DETAILED: Author
CHECKED: Checker
APPROVED: Approver
DATE:

0 1/2 1

IF THIS BAR DOES NOT MEASURE 1" THEN DRAWING IS NOT TO FULL SCALE

PROJECT NO.
400530

73-S-001
SHEET
OF

PLOTTED: 7/29/2019 7:35:48 PM
D400530

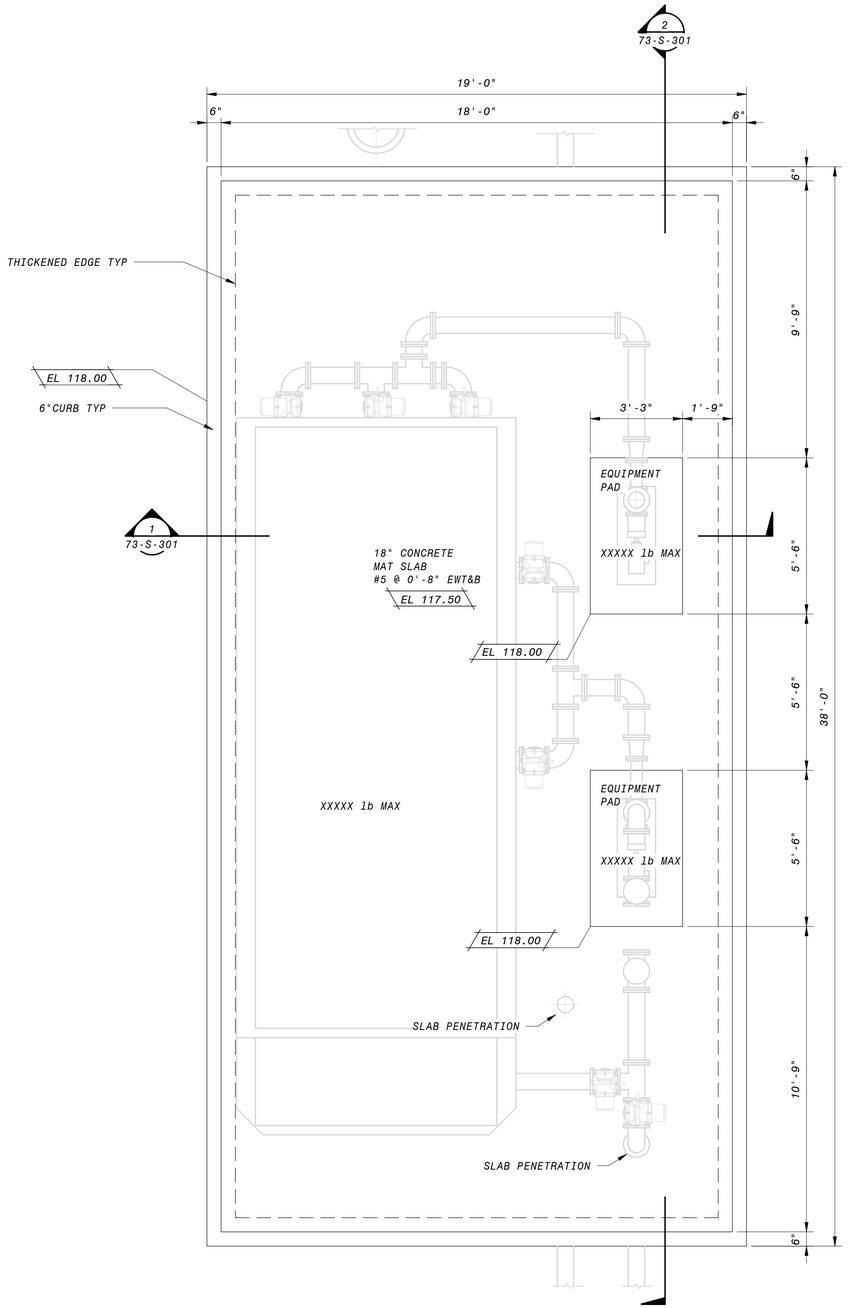

OPERATING LEVEL STRUCTURAL FLOOR PLAN

3/8" = 1'-0"

GENERAL STRUCTURAL NOTES

1. PLEASE SEE SOILS REPORT FOR ADDITIONAL SPECIFICATIONS AND RECOMMENDATIONS. IT IS THE DESIGN BUILDER'S RESPONSIBILITY TO OBTAIN A COPY OF THE SOILS REPORT FROM THE OWNER OR OWNERS REPRESENTATIVE.

2. PRIOR TO THE DESIGN-BUILDER REQUESTING A BUILDING DEPARTMENT FOUNDATION INSPECTION, THE SOILS ENGINEER SHALL ADVISE THE BUILDING INSPECTOR IN WRITING THAT:

   A) BUILDING PAD WAS PREPARED IN ACCORDANCE WITH SOILS REPORT

   B) UTILITY TRENCHES HAVE BEEN PROPERLY BACKFILLED AND COMPACTED, AND

   C) FOUNDATION EXCAVATIONS, THE SOIL'S EXPANSIVE CHARACTERISTICS AND BEARING CAPACITY CONFORM TO THE SOILS REPORT.

3. SEE GENERAL NOTES & SPECIFICATIONS FOR ADDITIONAL REQUIREMENTS AND MATERIAL SPECIFICATIONS.

4. VERIFY ALL DIMENSIONS PRIOR TO COMMENCEMENT OF CONSTRUCTION.

5. OUTSIDE LAYER OF MAT SLAB REINFORCEMENT TO BE PLACED IN THE LONG DIRECTION. INSIDE LAYER OF MAT SLAB REINFORCEMENT TO BE PLACED IN THE SHORT DIRECTION. TYPICAL, UNLESS NOTED OTHERWISE.

6. ALL LAP SPLICES TO BE CLASS B PER DETAIL 1/00-S-101

7. SUBMIT EQUIPMENT WEIGHT FOR REVIEW PRIOR TO INSTALLATION. SEE DETAIL 1/00-S-105 FOR TYPICAL EQUIPMENT PADS. LOCATION AND SIZE OF EQUIPMENT PADS TO BE COORDINATED WITH MECHANICAL/ELECTRICAL/PLUMBING DRAWINGS. EQUIPMENT ANCHORAGE PER PROJECT SPECIFICATIONS.

8. REFER TO MECHANICAL/ELECTRICAL/PLUMBING DRAWINGS FOR SIZE AND LOCATIONS OF PIPE PENETRATIONS AND WALL OPENINGS. SEE DETAIL 9/00-S-101 FOR TYPICAL REINFORCEMENT REQUIREMENTS. COORDINATE PIPE PENETRATION SEAL WITH MECHANICAL ENGINEER OF RECORD.

9. ALL SLAB REINFORCEMENT MUST TERMINATE WITH A STANDARD 90DEG HOOK PER DETAIL 5/00-S-101.

12" 0' 1' 2' 3' 4' 5' 6' 7'

3/8" = 1'-0"

60% SUBMITTAL- NOT FOR CONSTRUCTION

NO.	BY	CHK	APP	DATE	REVISIONS AND RECORD OF USE

Ashley & Vance ENGINEERING, INC
JOINT VENTURE
BLACK & VEATCH
FILANC

CITY OF MORRO BAY
FILANC BLACK & VEATCH DB PROPOSAL
MORRO BAY WRF

SAFE FILTER AREA
STRUCTURAL
PLAN

DESIGNED: I. SHOEBRIDGE
DETAILED: S. BENJAMIN
CHECKED: Checker
APPROVED: Approver
DATE:

0 1/2 1
IF THIS BAR DOES NOT MEASURE 1" THEN DRAWING IS NOT TO FULL SCALE

PROJECT NO.
400530

73-S-101
SHEET
OF

PLOTTED: 7/29/2019 7:35:48 PM
D400530

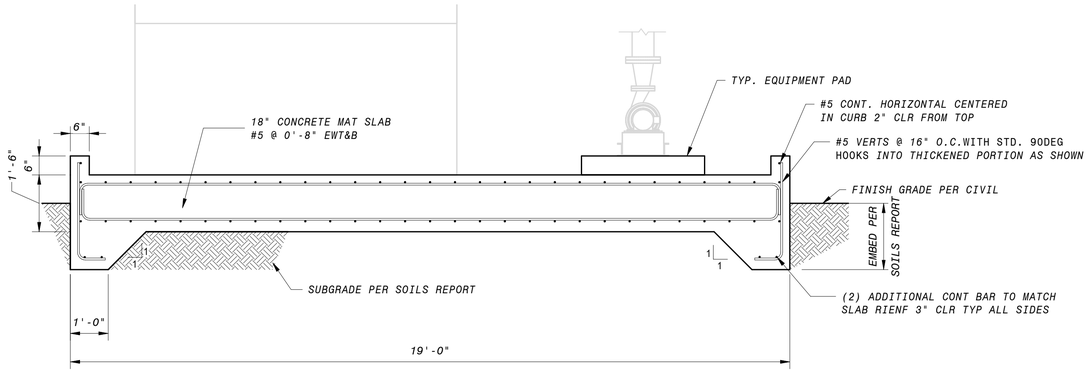

1 SECTION
73-S-101 1/2" = 1'-0"

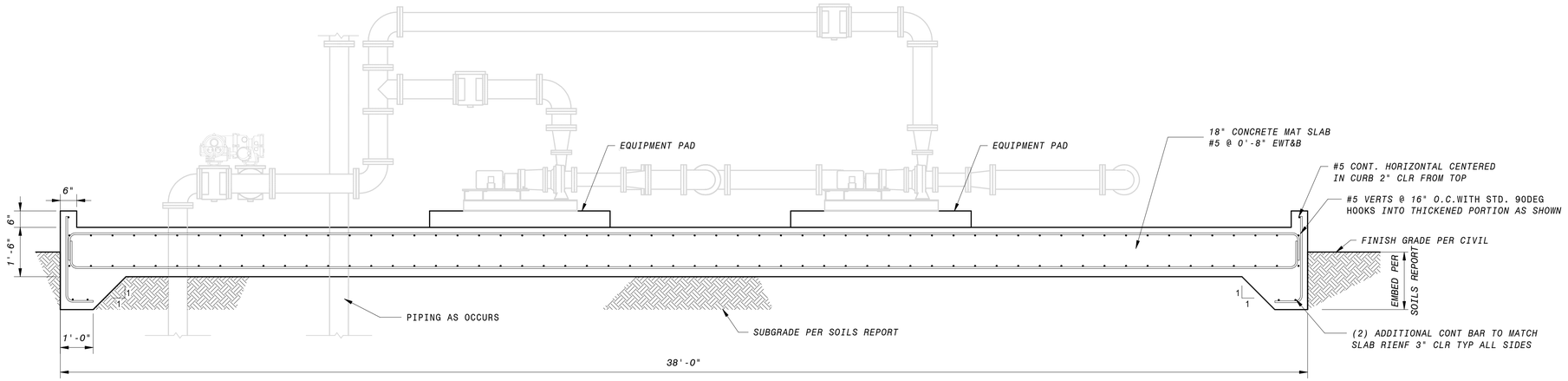

2 SECTION
73-S-101 1/2" = 1'-0"

GENERAL SECTION NOTES

1. FOR GENERAL STRUCTURAL NOTES, SEE SHEETS 00-S-002 AND STANDARD SPECIFICATIONS.
2. REINFORCEMENT CLEAR COVER TO BE 2" EF FOR WALLS, 2" AT TOP OF SLABS, AND 3" AT BOTTOM OF SLABS, TYP., UNO
3. ALL LAP SPLICES TO BE CLASS B PER DETAIL 1/00-S-101.
4. REFER TO MECHANICAL DRAWINGS FOR SIZE AND LOCATIONS OF PIPE PENETRATIONS AND WALL OPENINGS. SEE DETAIL 9/00-S-101 FOR TYPICAL REINFORCEMENT REQUIREMENTS. COORDINATE PIPE PENETRATION SEAL WITH EOR (WHERE OCCURS).
5. SUBMIT EQUIPMENT WEIGHT FOR REVIEW PRIOR TO INSTALLATION. SEE DETAIL 1/00-S-105 FOR TYPICAL EQUIPMENT PADS. LOCATION & SIZE OF EQUIPMENT PADS TO BE COORDINATED WITH MECHANICAL/ELECTRICAL/PLUMBING DRAWINGS. EQUIPMENT ANCHORAGE PER PROJECT SPECIFICATIONS.
6. ALL SLAB REINFORCEMENT MUST TERMINATE WITH A STANDARD 90DEG HOOK PER DETAIL 05/00-S-101.

NO.	BY	CHK	APP	DATE	REVISIONS AND RECORD OF USE

Ashley & Vance ENGINEERING, INC
JOINT VENTURE
BLACK & VEATCH
FILANC

CITY OF MORRO BAY
FILANC BLACK & VEATCH DB PROPOSAL
MORRO BAY WRF

SAFE FILTER AREA
STRUCTURAL
SECTIONS & DETAILS

DESIGNED: I. SHOEBRIDGE
DETAILED: S. BENJAMIN
CHECKED: Checker
APPROVED: Approver
DATE:

0 1/2 1
IF THIS BAR DOES NOT MEASURE 1" THEN DRAWING IS NOT TO FULL SCALE

PROJECT NO.
400530

73-S-301
SHEET
OF

12' 6' 0' 1' 2' 3' 4' 5'
1/2" = 1'-0"

60% SUBMITTAL- NOT FOR CONSTRUCTION

PLOTTED: 7/29/2019 7:35:48 PM
D400530

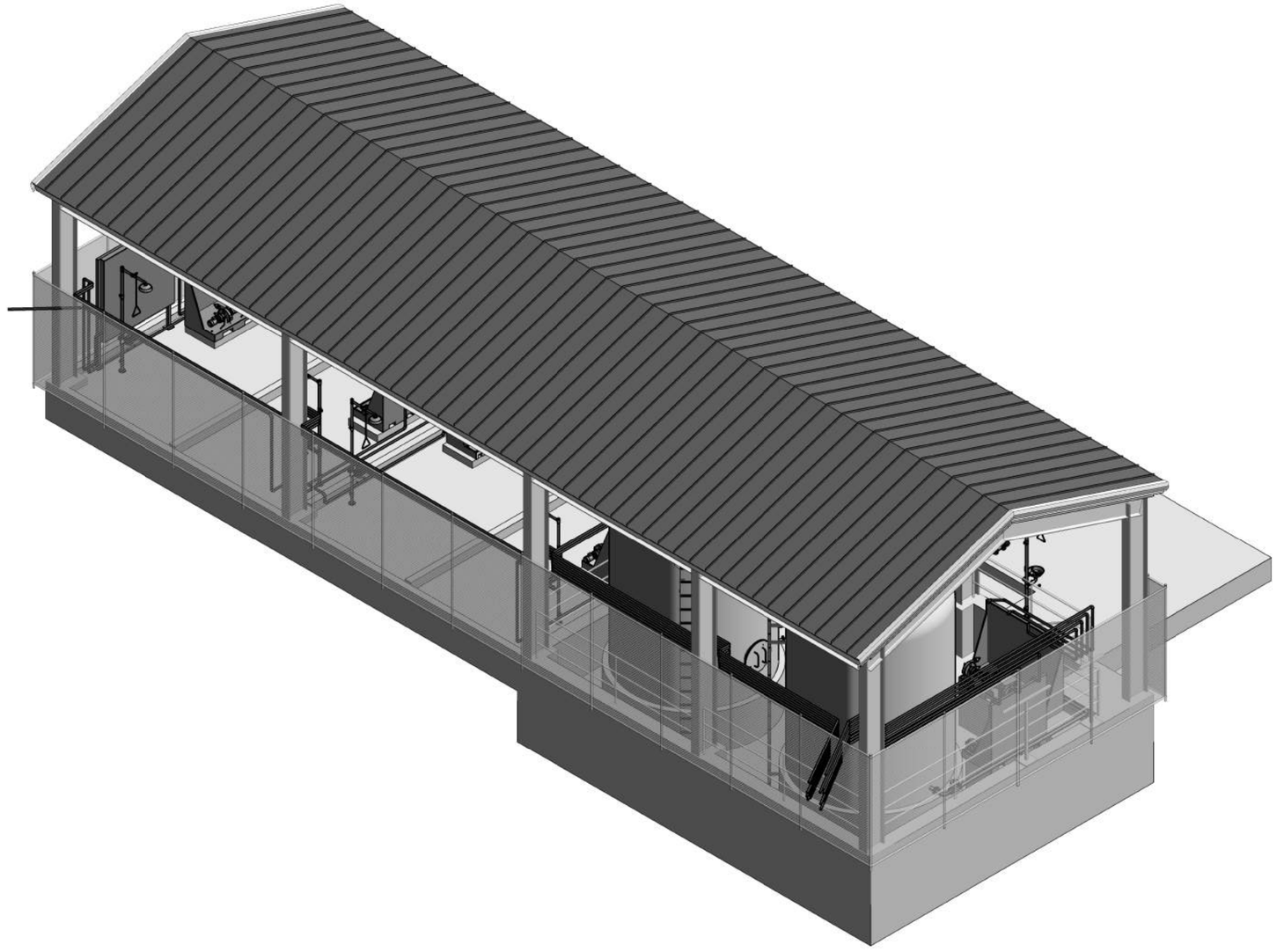

3D VIEW

60% SUBMITTAL - NOT FOR CONSTRUCTION

NO.	BY	CHK	APP	DATE	REVISIONS AND RECORD OF USE

Ashley & Vance ENGINEERING, INC

JOINT VENTURE

FILANC BLACK & VEATCH

CITY OF MORRO BAY
FILANC BLACK & VEATCH DB PROPOSAL
MORRO BAY WRF

CHEMICAL FACILITY
STRUCTURAL
3D VIEWS

DESIGNED: I. SHOEBRIDGE
DETAILED: S. BENJAMIN
CHECKED: Checker
APPROVED: Approver
DATE:

0 1/2 1
IF THIS BAR DOES NOT MEASURE 1" THEN DRAWING IS NOT TO FULL SCALE

PROJECT NO.
400530

90-S-001
SHEET
OF

PLOTTED: 7/29/2019 7:43:47 PM
D400530

GENERAL NOTES

1. PLEASE SEE SOILS REPORT FOR ADDITIONAL SPECIFICATIONS AND RECOMMENDATIONS. IT IS THE DESIGN-BUILDER'S RESPONSIBILITY TO OBTAIN A COPY OF THE SOILS REPORT FROM THE OWNER OR OWNERS REPRESENTATIVE.
2. PRIOR TO THE DESIGN-BUILDER REQUESTING A BUILDING DEPARTMENT FOUNDATION INSPECTION, THE SOILS ENGINEER SHALL ADVISE THE BUILDING INSPECTOR IN WRITING THAT:
   A) BUILDING PAD WAS PREPARED IN ACCORDANCE WITH SOILS REPORT
   B) UTILITY TRENCHES HAVE BEEN PROPERLY BACKFILLED AND COMPACTED, AND
   C) FOUNDATION EXCAVATIONS, THE SOIL'S EXPANSIVE CHARACTERISTICS AND BEARING CAPACITY CONFORM TO THE SOILS REPORT.
3. SEE GENERAL NOTES & SPECIFICATIONS FOR ADDITIONAL REQUIREMENTS AND MATERIAL SPECIFICATIONS.
4. VERIFY ALL DIMENSIONS PRIOR TO COMMENCEMENT OF CONSTRUCTION.
5. ALL LAP SPLICES TO BE CLASS B PER DETAIL 1/00-S-101
6. SUBMIT EQUIPMENT WEIGHT FOR REVIEW PRIOR TO INSTALLATION. SEE DETAIL 1/00-S-105 FOR TYPICAL EQUIPMENT PADS. LOCATION AND SIZE OF EQUIPMENT PADS TO BE COORDINATED WITH MECHANICAL/ELECTRICAL/PLUMBING DRAWINGS. EQUIPMENT ANCHORAGE PER PROJECT SPECIFICATIONS.
7. REFER TO MECHANICAL/ELECTRICAL/PLUMBING DRAWINGS FOR SIZE AND LOCATIONS OF PIPE PENETRATIONS AND WALL OPENINGS. SEE DETAIL 9/00-S-101 FOR TYPICAL REINFORCEMENT REQUIREMENTS. COORDINATE PIPE PENETRATION SEAL WITH MECHANICAL ENGINEER OF RECORD.
8. COORDINATE LOCATION AND DETAILING FOR ATTACHMENT OF MECHANICAL SUPPORTS WITH BUILDING MANUFACTURER AND MECHANICAL ENGINEER OF RECORD PRIOR TO INSTALLATION.

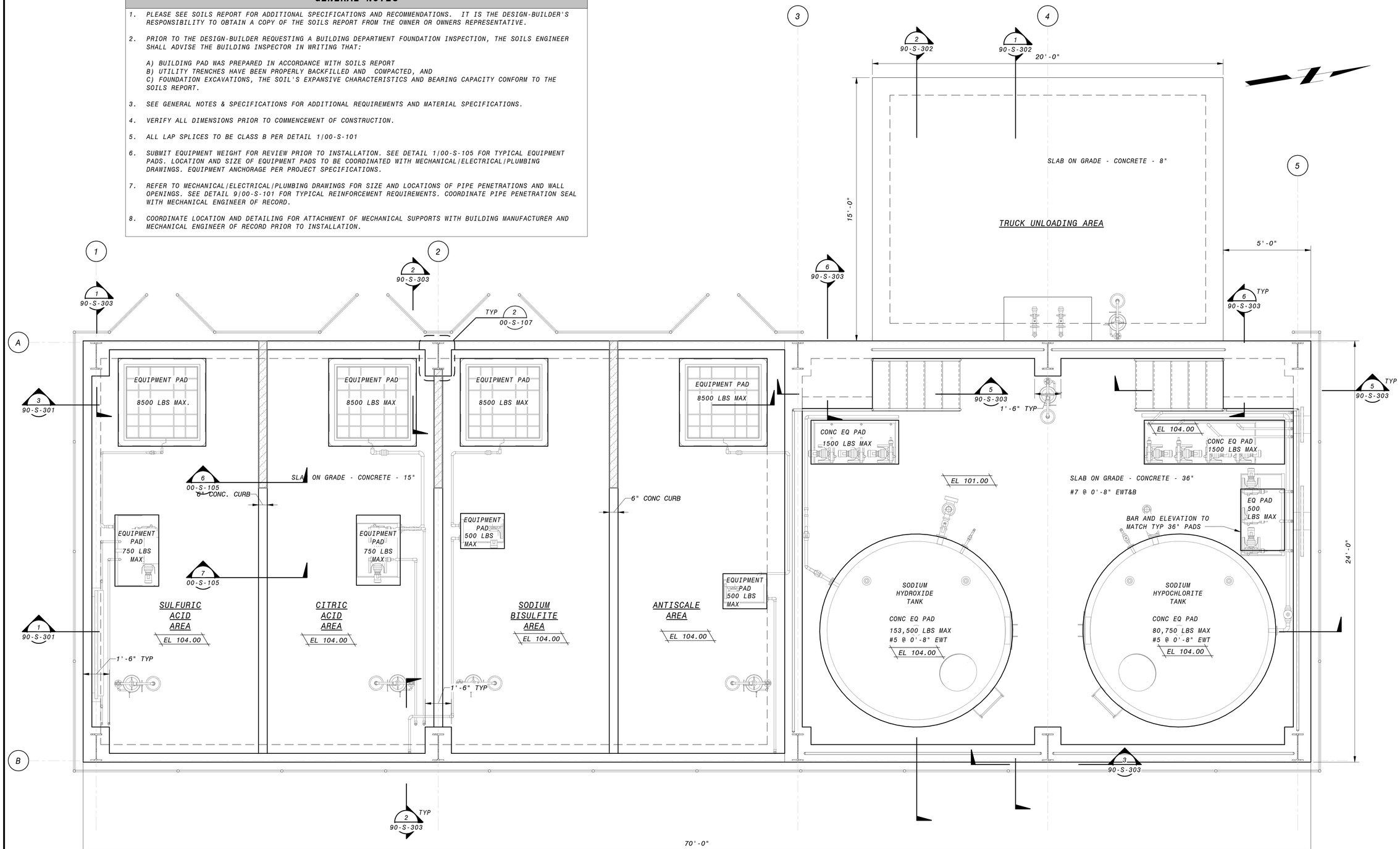

OPERATING LEVEL FLOOR PLAN

3/8" = 1'-0"

12" 0' 1' 2' 3' 4' 5' 6' 7'

3/8" = 1'-0"

60% SUBMITTAL - NOT FOR CONSTRUCTION

NO.	BY	CHK	APP	DATE	REVISIONS AND RECORD OF USE

Ashley & Vance ENGINEERING, INC
JOINT VENTURE
BLACK & VEATCH
FILANC

CITY OF MORRO BAY
FILANC BLACK & VEATCH DB PROPOSAL
MORRO BAY WRF

CHEMICAL FACILITY
STRUCTURAL
PLAN

DESIGNED: I. SHOEBRIDGE
DETAILED: S. BENJAMIN
CHECKED: Checker
APPROVED: Approver
DATE:

0 1/2 1
IF THIS BAR DOES NOT MEASURE 1" THEN DRAWING IS NOT TO FULL SCALE

PROJECT NO.
400530

90-S-101
SHEET
OF

PLOTTED: 7/29/2019 7:43:48 PM
D400530

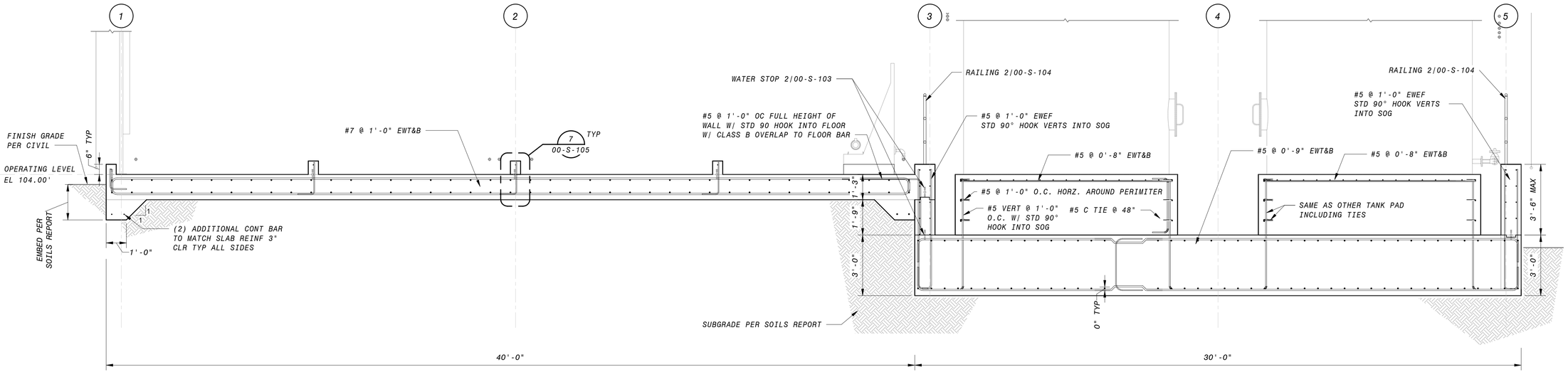

1 SECTION
90-S-101 3/8" = 1'-0"

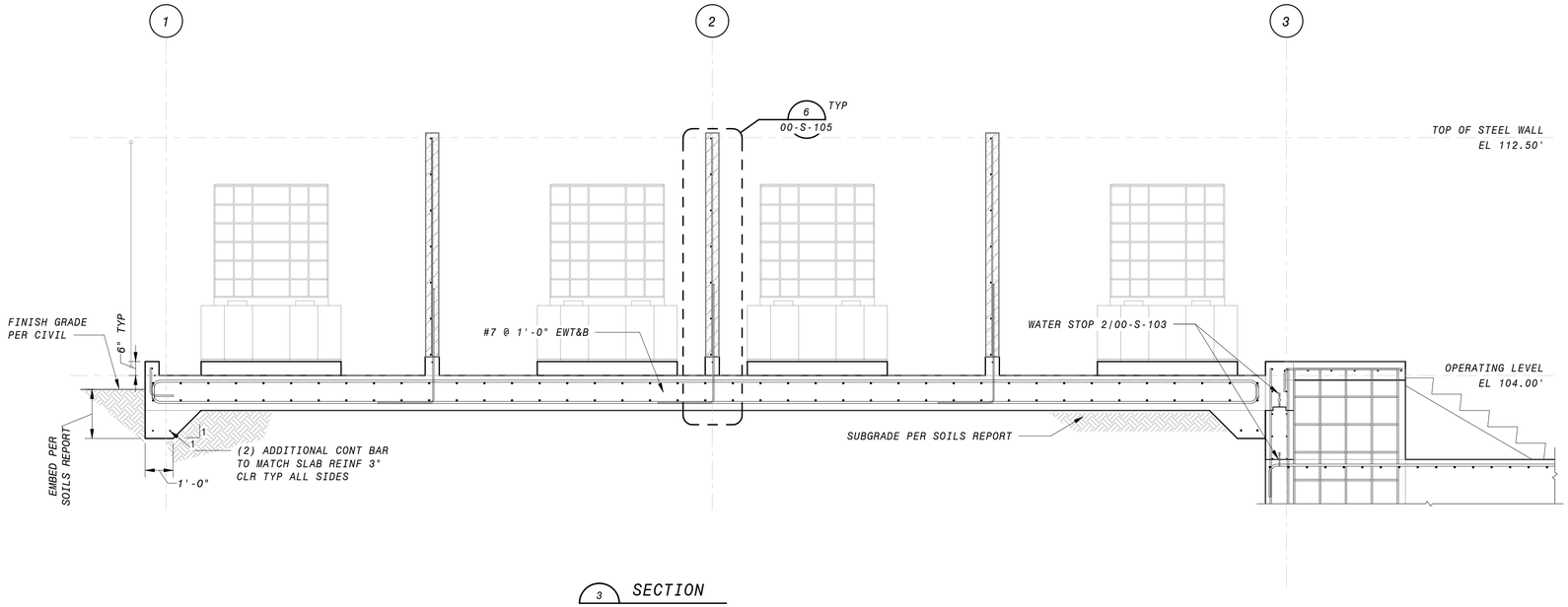

3 SECTION
90-S-101 3/8" = 1'-0"

GENERAL SECTION NOTES

1. FOR GENERAL STRUCTURAL NOTES, SEE SHEETS 00-S-002 AND STANDARD SPECIFICATIONS.
2. AT WALLS 12" THICK OR LESS, PROVIDE A 6" WATERSTOP, UNO. AT WALLS GREATER THAN 12" THICK, PROVIDE A 9" WATERSTOP, UNO. REFER TO DETAIL 2 ON SHEET 00-S-103.
3. REINFORCEMENT CLEAR COVER TO BE 2" EF FOR WALLS, 2" AT TOP OF SLABS, AND 3" AT BOTTOM OF SLABS, TYP., UNO
4. CONTRACTOR IS TO PROVIDE COMPLETE DESIGN PACKAGE FOR FRP COVER/GRATING (AND ACCESS HATCH, WHERE OCCURS) SIGNED BY A REGISTERED PROFESSIONAL ENGINEER TO THE EOR FOR REVIEW AND APPROVAL. MINIMUM DESIGN CRITERIA MUST INCLUDE: 60psf UNIFORM DISTRIBUTED LIVE LOAD, 300lb CONCENTRATED LIVE LOAD, AND LESSER OF L/120 OR 3/8" DEFLECTION. SEE DETAIL 3/00-S-101 FOR ADDITIONAL INFORMATION AT GRATING SUPPORT.
5. RETAINING WALLS ARE DESIGNED ASSUMING SUFFICIENT SUB-SURFACE DRAINAGE WILL BE PROVIDED BEHIND WALLS. CONTRACTOR TO PROVIDE WATERPROOF BARRIER BETWEEN SOIL AND CONCRETE RETAINING WALL. SEE PROJECT SOILS REPORT FOR SPECIFIC REQUIREMENTS.
6. ALL LAP SPLICES TO BE CLASS B PER DETAIL 1/S-00-101.
7. REFER TO MECHANICAL DRAWINGS FOR SIZE AND LOCATIONS OF PIPE PENETRATIONS AND WALL OPENINGS. SEE DETAIL 9/00-S-101 FOR TYPICAL REINFORCEMENT REQUIREMENTS. COORDINATE PIPE PENETRATION SEAL WITH EOR (WHERE OCCURS).
8. PROVIDE WEIR PLATE PER MECHANICAL DRAWINGS. COORDINATE OPENING SIZE WITH EOR.
9. PROVIDE GATE PER MECHANICAL DRAWINGS. COORDINATE OPENING SIZE WITH EOR.
10. COORDINATE EQUIPMENT WEIGHT WITH EOR PRIOR TO INSTALLATION. SEE DETAIL 1/00-S-105 FOR TYPICAL EQUIPMENT ANCHORAGE AND EQUIPMENT PADS.

12" 0' 1' 2' 3' 4' 5' 6' 7'
3/8" = 1'-0"

60% SUBMITTAL - NOT FOR CONSTRUCTION

NO.	BY	CHK	APP	DATE	REVISIONS AND RECORD OF USE

Ashley & Vance ENGINEERING, INC
JOINT VENTURE
BLACK & VEATCH
FILANC

CITY OF MORRO BAY
FILANC BLACK & VEATCH DB PROPOSAL
MORRO BAY WRF

CHEMICAL FACILITY
STRUCTURAL
SECTIONS & DETAILS 1

DESIGNED: I. SHOEBRIDGE
DETAILED: S. BENJAMIN
CHECKED: Checker
APPROVED: Approver
DATE:

0 1/2 1
IF THIS BAR DOES NOT MEASURE 1" THEN DRAWING IS NOT TO FULL SCALE

PROJECT NO.
400530

90-S-301
SHEET
OF

PLOTTED: 7/29/2019 7:43:49 PM
D400530

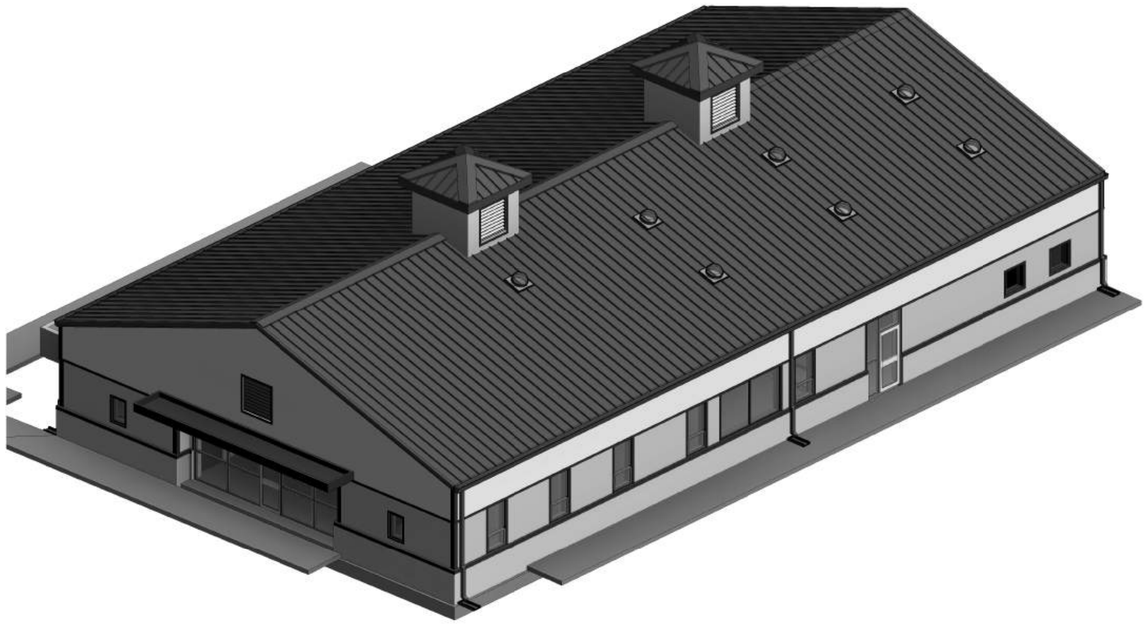

3D VIEW - EAST

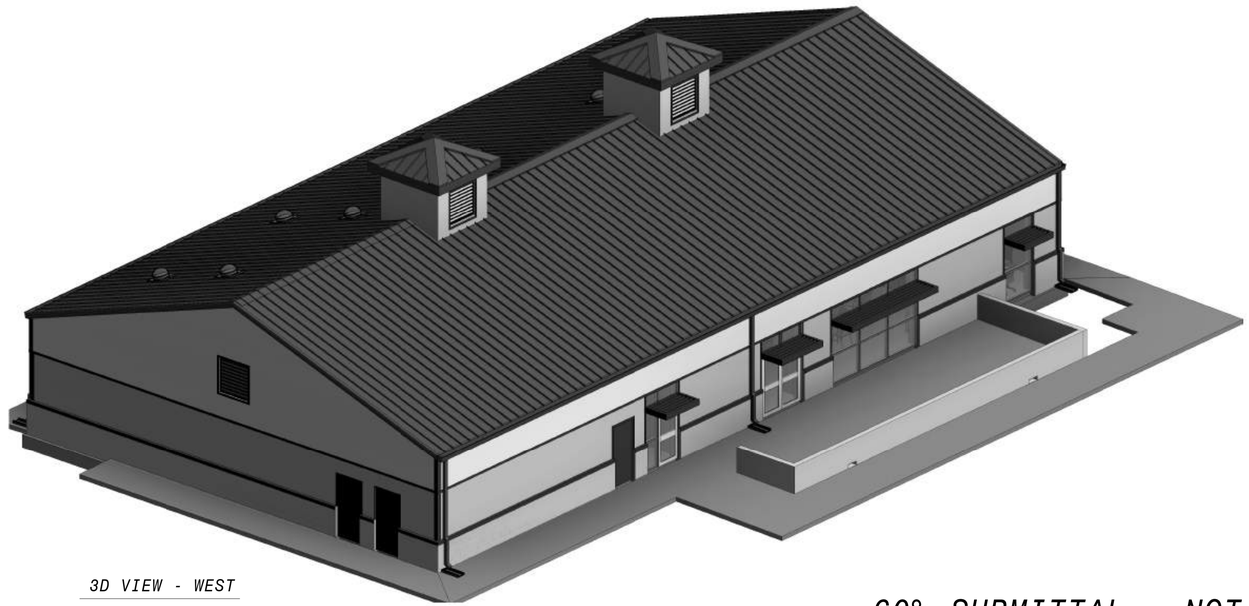

3D VIEW - WEST

60% SUBMITTAL - NOT FOR CONSTRUCTION

NO.	BY	CHK	APP	DATE	REVISIONS AND RECORD OF USE

Ashley & Vance ENGINEERING, INC
JOINT VENTURE
FILANC
BLACK & VEATCH

CITY OF MORRO BAY
FILANC BLACK & VEATCH DB PROPOSAL
WATER RECLAMATION FACILITY (WRF)

OPS BUILDING
STRUCTURAL
3D VIEWS

DESIGNED: I. SHOEBRIDGE
DETAILED: S. BENJAMIN
CHECKED: Checker
APPROVED: Approver
DATE: XX/XX/XXXX

0 1/2 1
IF THIS BAR DOES NOT MEASURE 1" THEN DRAWING IS NOT TO FULL SCALE

PROJECT NO.
400530

95-S-001
SHEET
OF XXX

PLOTTED: 7/29/2019 7:13:38 PM
D400530

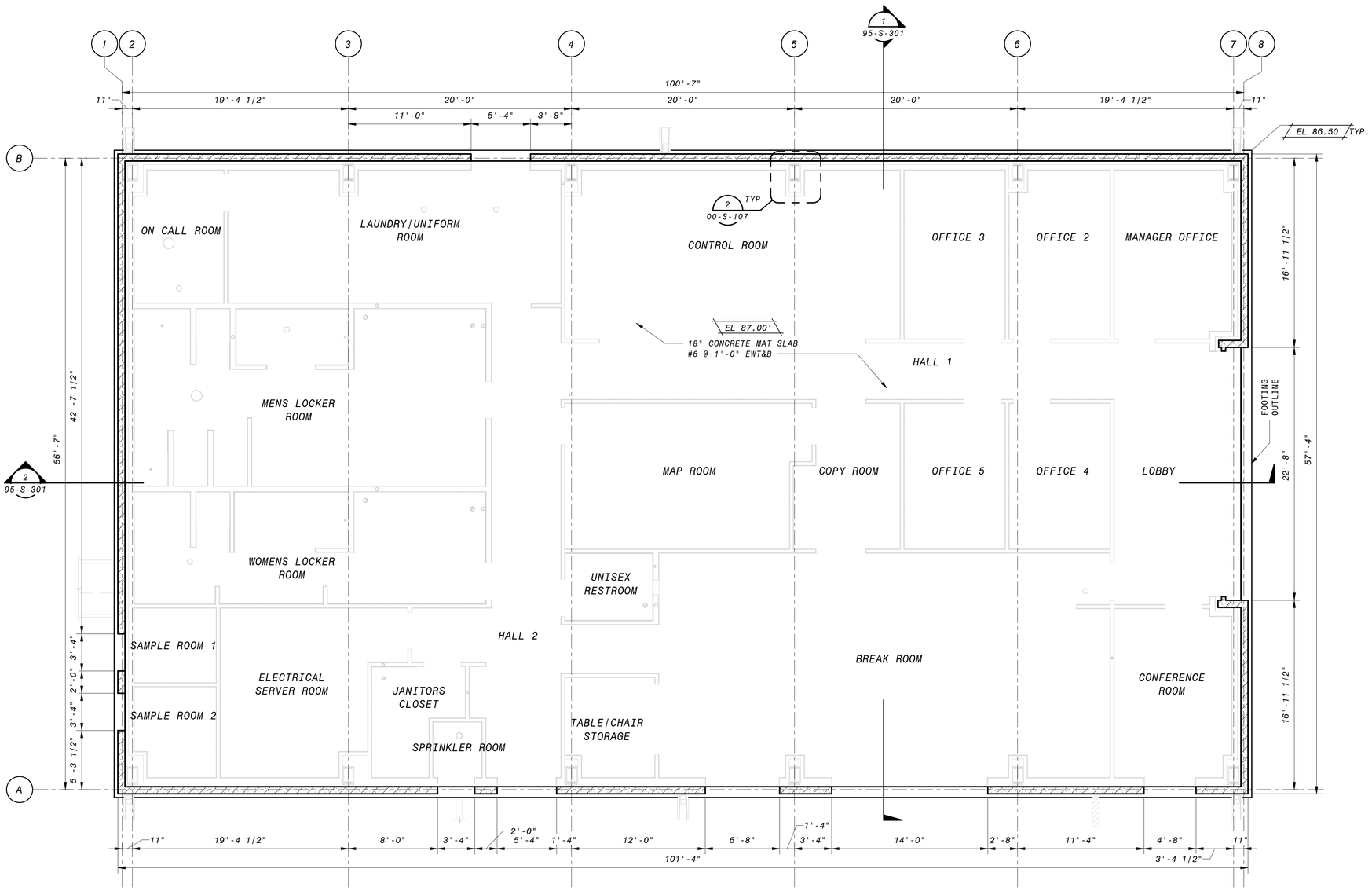

OPERATING FLOOR PLAN

3/16" = 1'-0"

GENERAL NOTES

1. PLEASE SEE SOILS REPORT FOR ADDITIONAL SPECIFICATIONS AND RECOMMENDATIONS. IT IS THE DESIGN-BUILDER'S RESPONSIBILITY TO OBTAIN A COPY OF THE SOILS REPORT FROM THE OWNER OR OWNERS REPRESENTATIVE.
2. PRIOR TO THE DESIGN-BUILDER REQUESTING A BUILDING DEPARTMENT FOUNDATION INSPECTION, THE SOILS ENGINEER SHALL ADVISE THE BUILDING INSPECTOR IN WRITING THAT:

   A) BUILDING PAD WAS PREPARED IN ACCORDANCE WITH SOILS REPORT

   B) UTILITY TRENCHES HAVE BEEN PROPERLY BACKFILLED AND COMPACTED, AND

   C) FOUNDATION EXCAVATIONS, THE SOIL'S EXPANSIVE CHARACTERISTICS AND BEARING CAPACITY CONFORM TO THE SOILS REPORT.
3. SEE GENERAL NOTES & SPECIFICATIONS FOR ADDITIONAL REQUIREMENTS AND MATERIAL SPECIFICATIONS.
4. VERIFY ALL DIMENSIONS PRIOR TO COMMENCEMENT OF CONSTRUCTION.
5. ALL LAP SPLICES TO BE CLASS B PER DETAIL 1/00-S-101
6. REFER TO MECHANICAL/ELECTRICAL/PLUMBING DRAWINGS FOR SIZE AND LOCATIONS OF PIPE PENETRATIONS AND WALL OPENINGS. SEE DETAIL 9/00-S-101 FOR TYPICAL REINFORCEMENT REQUIREMENTS. COORDINATE PIPE PENETRATION SEAL WITH MECHANICAL ENGINEER OF RECORD.
7. COORDINATE LOCATION AND DETAILING FOR ATTACHMENT OF MECHANICAL SUPPORTS WITH BUILDING MANUFACTURER AND MECHANICAL ENGINEER OF RECORD PRIOR TO INSTALLATION.

6" 4' 2' 0' 5' 10'

3/16" = 1'-0"

60% SUBMITTAL - NOT FOR CONSTRUCTION

NO.	BY	CHK	APP	DATE	REVISIONS AND RECORD OF USE

Ashley & Vance ENGINEERING, INC
JOINT VENTURE
FILANC
BLACK & VEATCH

CITY OF MORRO BAY
FILANC BLACK & VEATCH DB PROPOSAL
WATER RECLAMATION FACILITY (WRF)

OPS BUILDING
STRUCTURAL
FLOOR PLAN

DESIGNED: I. Shoebridge
DETAILED: S. Benjamin
CHECKED: Checker
APPROVED: Approver
DATE: XX/XX/XXXX

0 1/2 1
IF THIS BAR DOES NOT MEASURE 1" THEN DRAWING IS NOT TO FULL SCALE

PROJECT NO.
400530

95-S-101
SHEET
OF XXX

PLOTTED: 7/29/2019 7:13:39 PM
D400530

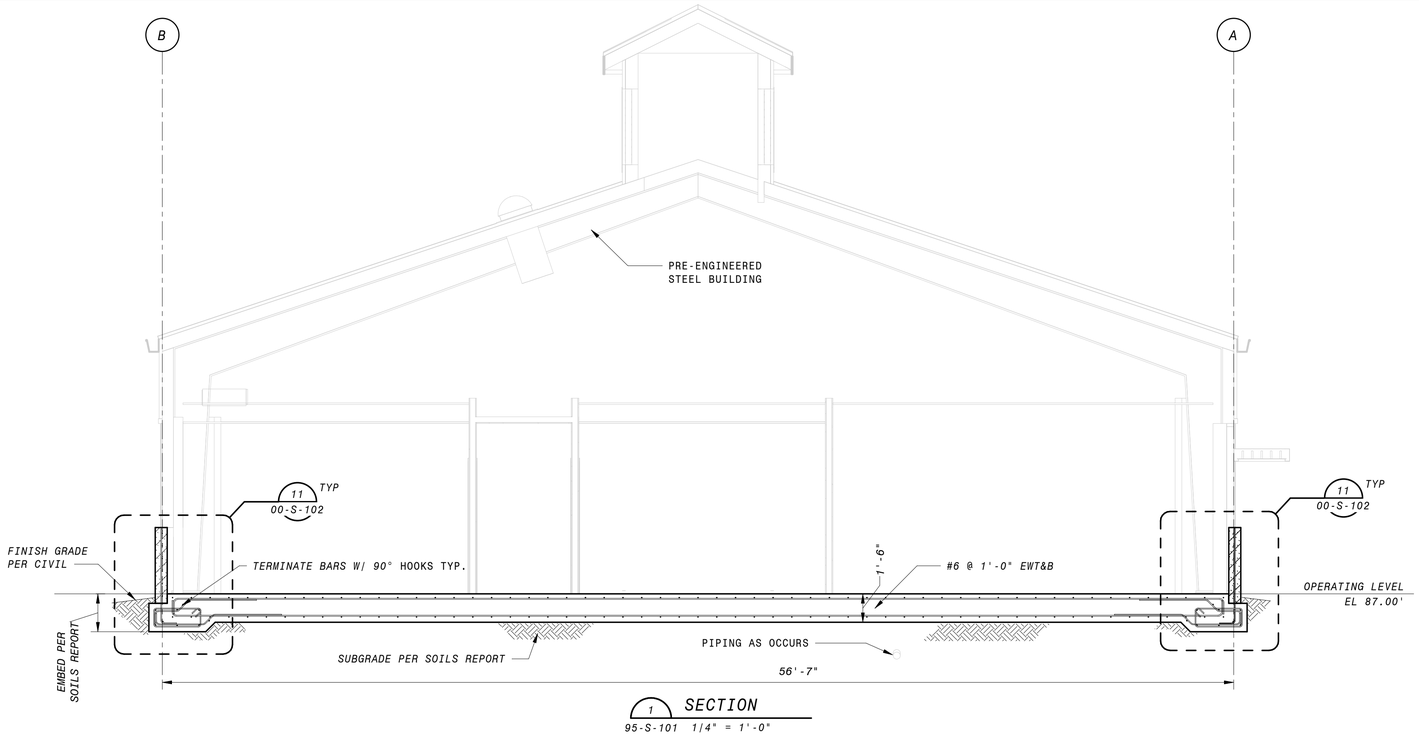

1 SECTION
95-S-101 1/4" = 1'-0"

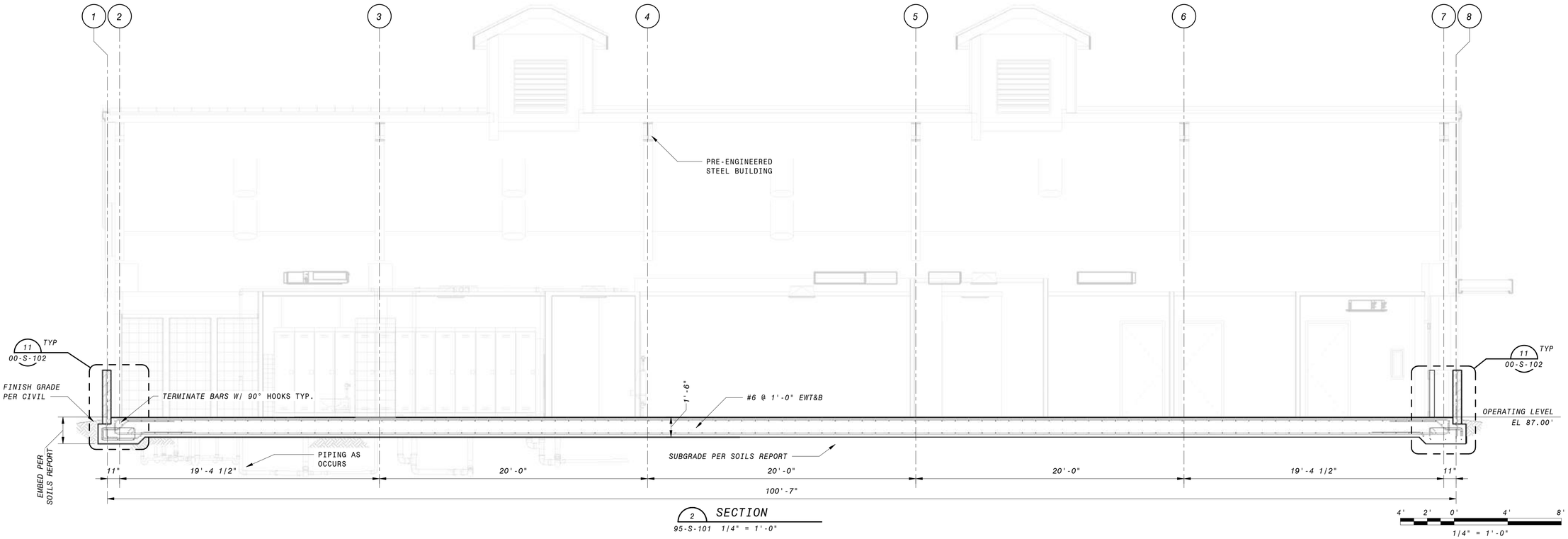

2 SECTION
95-S-101 1/4" = 1'-0"

4' 2' 0' 4' 8'
1/4" = 1'-0"

GENERAL SECTION NOTES

1. FOR GENERAL STRUCTURAL NOTES, SEE SHEETS 00-S-002 AND STANDARD SPECIFICATIONS.
2. REINFORCEMENT CLEAR COVER TO BE 2" EF FOR WALLS, 2" AT TOP OF SLABS, AND 3" AT BOTTOM OF SLABS, TYP., UNO
3. ALL LAP SPLICES TO BE CLASS B PER DETAIL 1/00-S-101.
4. REFER TO MECHANICAL DRAWINGS FOR SIZE AND LOCATIONS OF PIPE PENETRATIONS AND WALL OPENINGS. SEE DETAIL 9/00-S-101 FOR TYPICAL REINFORCEMENT REQUIREMENTS. COORDINATE PIPE PENETRATION SEAL WITH EOR (WHERE OCCURS).
5. COORDINATE EQUIPMENT WEIGHT WITH EOR PRIOR TO INSTALLATION. SEE DETAIL 1/00-S-105 FOR TYPICAL EQUIPMENT ANCHORAGE AND EQUIPMENT PADS.

60% SUBMITTAL - NOT FOR CONSTRUCTION

NO.	BY	CHK	APP	DATE	REVISIONS AND RECORD OF USE

Ashley & Vance ENGINEERING, INC
JOINT VENTURE
BLACK & VEATCH
FILANC

CITY OF MORRO BAY
FILANC BLACK & VEATCH DB PROPOSAL
WATER RECLAMATION FACILITY (WRF)

OPS BUILDING
STRUCTURAL
SECTIONS

DESIGNED: I. SHOEBRIDGE
DETAILED: S. BENJAMIN
CHECKED: Checker
APPROVED: Approver
DATE: XX/XX/XXXX

0 1/2 1
IF THIS BAR DOES NOT MEASURE 1" THEN DRAWING IS NOT TO FULL SCALE

PROJECT NO.
400530

95-S-301
SHEET
OF XXX

PLOTTED: 7/29/2019 7:13:42 PM
D400530

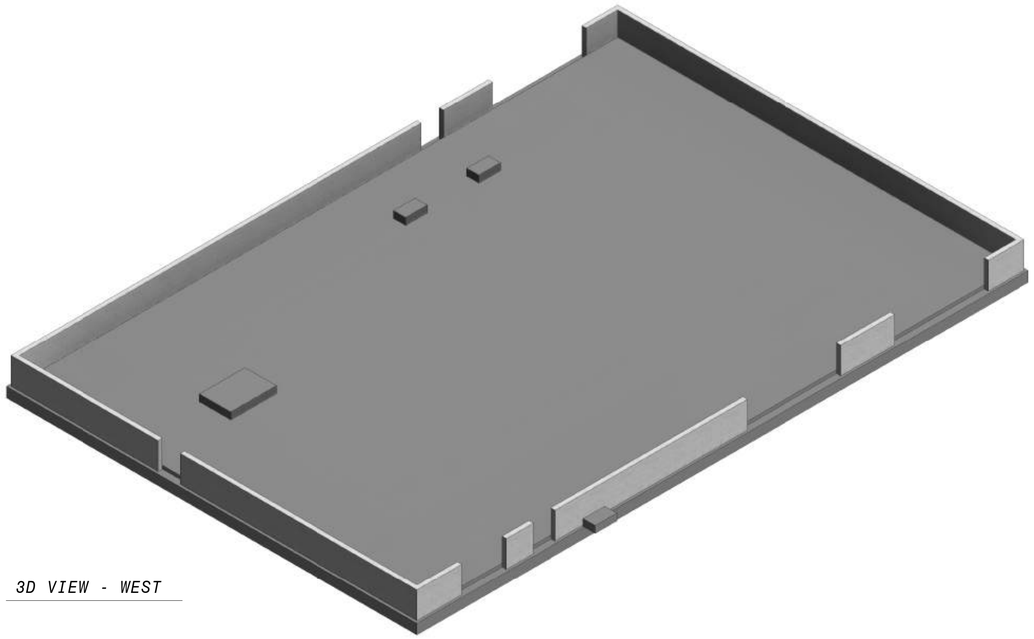

3D VIEW - WEST

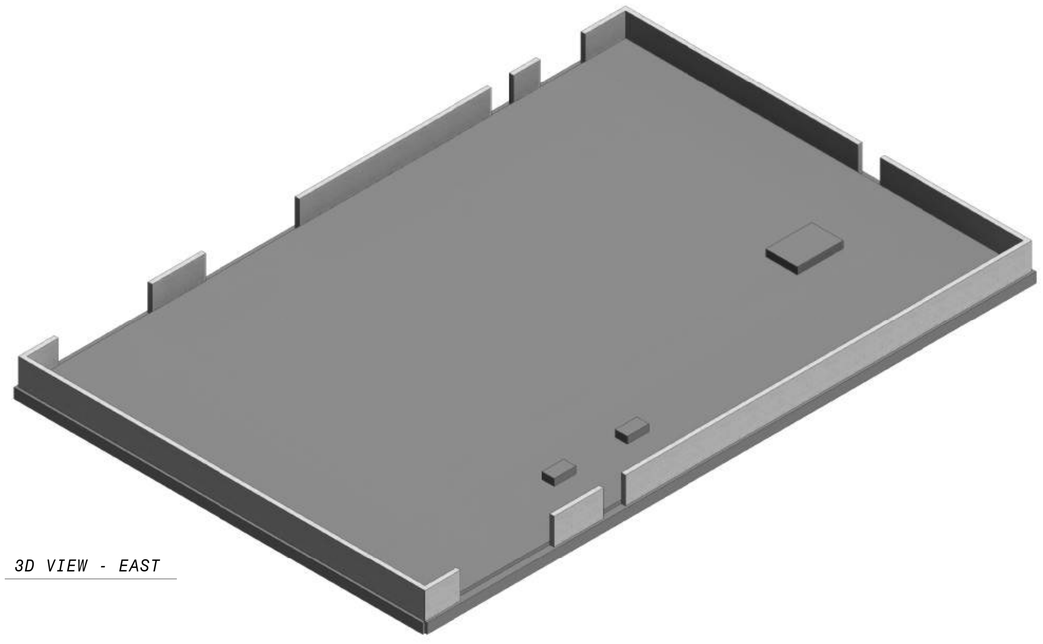

3D VIEW - EAST

60% SUBMITTAL - NOT FOR CONSTRUCTION

DATE	REVISIONS AND RECORD OF USE	NO.	BY	CHK	APP

Ashley & Vance ENGINEERING, INC
JOINT VENTURE
FILANC
BLACK & VEATCH

CITY OF MORRO BAY
MORRO BAY WRF
WATER RECLAMATION FACILITY (WRF)

MAINTENANCE BUILDING
STRUCTURAL
3D VIEWS

DESIGNED: I. SHOEBRIDGE
DETAILED: S. BENJAMIN
CHECKED: Checker
APPROVED: Approver
DATE: XX/XX/XXXX

0 1/2 1
IF THIS BAR DOES NOT MEASURE 1" THEN DRAWING IS NOT TO FULL SCALE

PROJECT NO.
400530

S-96-001
SHEET
OF XXX

PLOTTED: 7/29/2019 8:04:14 PM
D400530

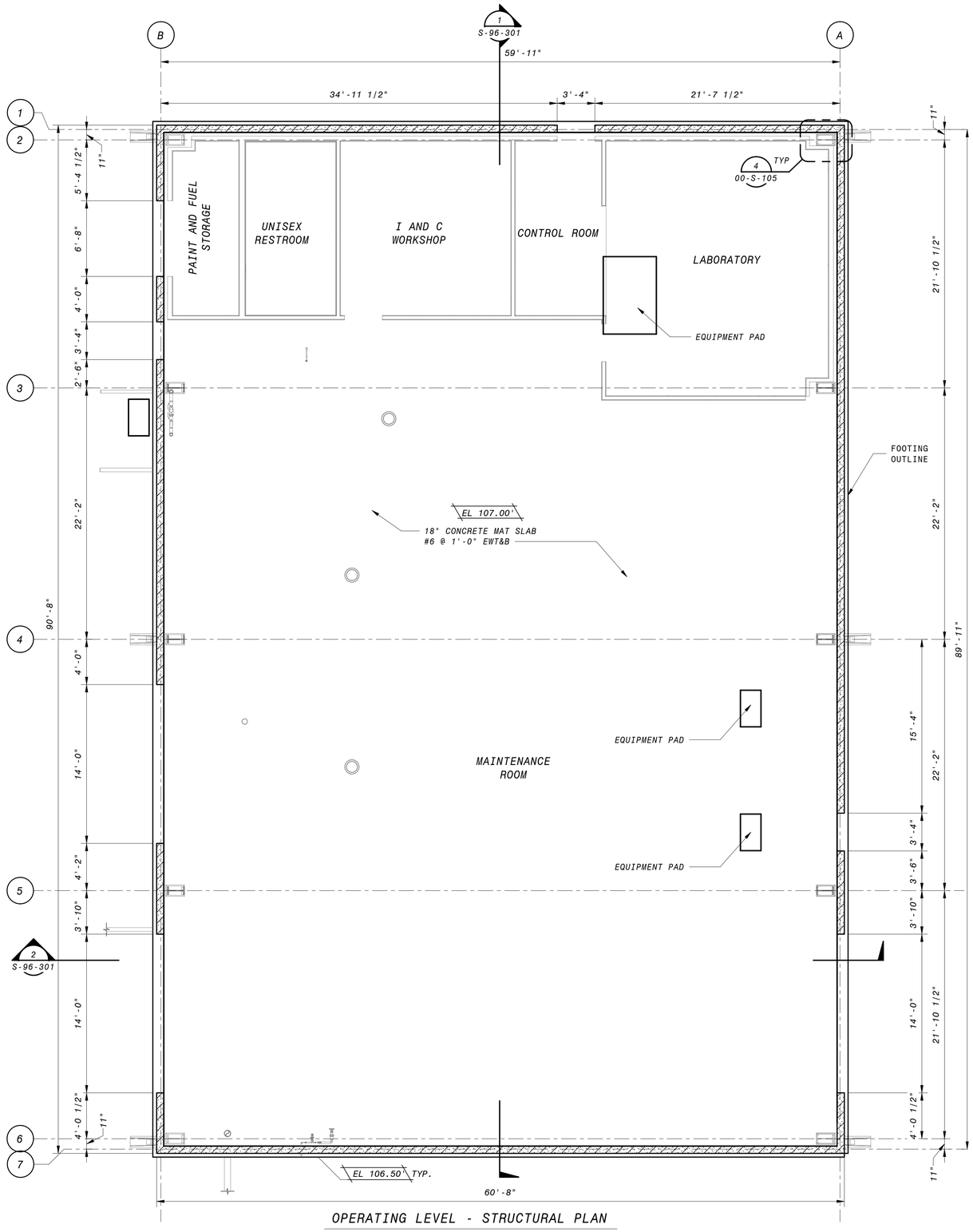

OPERATING LEVEL - STRUCTURAL PLAN

3/16" = 1'-0"

GENERAL NOTES

1. PLEASE SEE SOILS REPORT FOR ADDITIONAL SPECIFICATIONS AND RECOMMENDATIONS. IT IS THE DESIGN-BUILDER'S RESPONSIBILITY TO OBTAIN A COPY OF THE SOILS REPORT FROM THE OWNER OR OWNERS REPRESENTATIVE.
2. PRIOR TO THE DESIGN-BUILDER REQUESTING A BUILDING DEPARTMENT FOUNDATION INSPECTION, THE SOILS ENGINEER SHALL ADVISE THE BUILDING INSPECTOR IN WRITING THAT:

   A) BUILDING PAD WAS PREPARED IN ACCORDANCE WITH SOILS REPORT

   B) UTILITY TRENCHES HAVE BEEN PROPERLY BACKFILLED AND COMPACTED, AND

   C) FOUNDATION EXCAVATIONS, THE SOIL'S EXPANSIVE CHARACTERISTICS AND BEARING CAPACITY CONFORM TO THE SOILS REPORT.
3. SEE GENERAL NOTES & SPECIFICATIONS FOR ADDITIONAL REQUIRMENTS AND MATERIAL SPECIFICATIONS.
4. VERIFY ALL DIMENSIONS PRIOR TO COMMENCEMENT OF CONSTRUCTION.
5. ALL LAP SPLICES TO BE CLASS B PER DETAIL 1|00-S-101
6. SUBMIT EQUIPMENT WEIGHT FOR REVIEW PRIOR TO INSTALLATION. SEE DETAIL 1|00-S-105 FOR TYPICAL EQUIPMENT PADS. LOCATION AND SIZE OF EQUIPMENT PADS TO BE COORDINATED WITH MECHANICAL/ELECTRICAL/PLUMBING DRAWINGS. EQUIPMENT ANCHORAGE PER PROJECT SPECIFICATIONS.
7. REFER TO MECHANICAL/ELECTRICAL/PLUMBING DRAWINGS FOR SIZE AND LOCATIONS OF PIPE PENETRATIONS AND WALL OPENINGS. SEE DETAIL 9|00-S-101 FOR TYPICAL REINFORCEMENT REQUIREMENTS. COORDINATE PIPE PENETRATION SEAL WITH MECHANICAL ENGINEER OF RECORD.
8. COORDINATE LOCATION AND DETAILING FOR ATTACHMENT OF MECANICAL SUPPORTS WITH BUILDING MANUFACTURER AND MECHANICAL ENGINEER OF RECORD PRIOR TO INSTALLATION.

6" 4' 2' 0' 5' 10'

3/16" = 1'-0"

60% SUBMITTAL - NOT FOR CONSTRUCTION

NO.	BY	CHK	APP	DATE	REVISIONS AND RECORD OF USE

Ashley & Vance ENGINEERING, INC
JOINT VENTURE
FILANC
BLACK & VEATCH

CITY OF MORRO BAY
MORRO BAY WRF
WATER RECLAMATION FACILITY (WRF)

MAINTENANCE BUILDING
STRUCTURAL
PLAN

DESIGNED: I. Shoebridge
DETAILED: S. Benjamin
CHECKED: Checker
APPROVED: Approver
DATE: XX/XX/XXXX

0 1/2 1
IF THIS BAR DOES NOT MEASURE 1" THEN DRAWING IS NOT TO FULL SCALE

PROJECT NO.
400530

S-96-101
SHEET
OF XXX

PLOTTED: 7/29/2019 8:04:15 PM
D400530

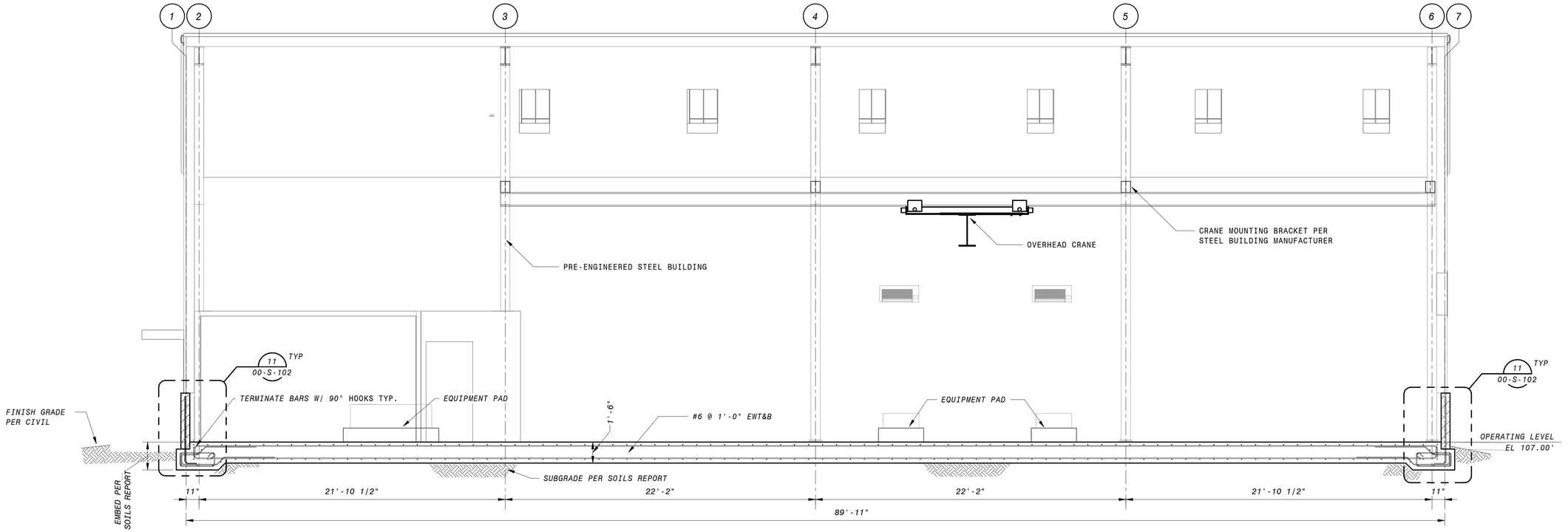

1 SECTION
S-96-101 1/4" = 1'-0"

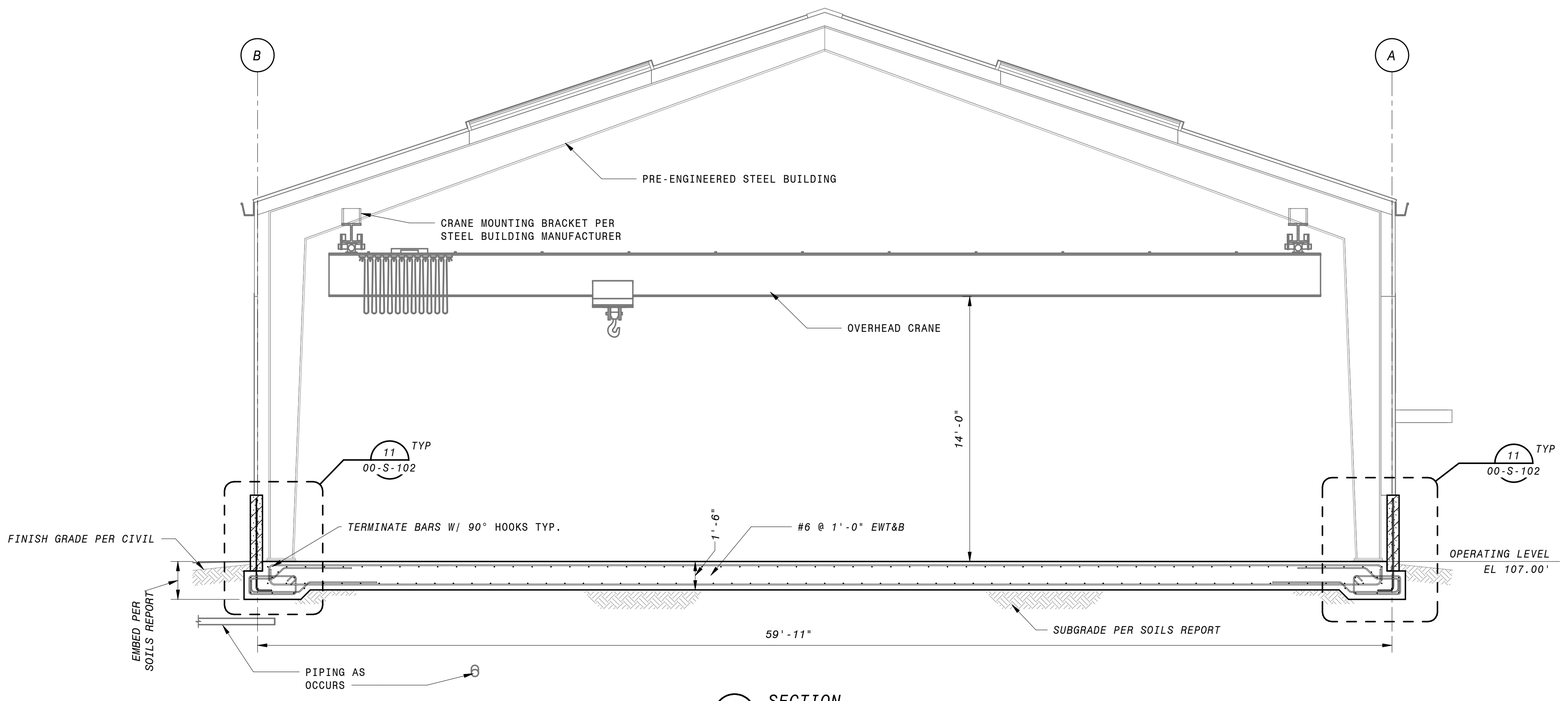

2 SECTION
S-96-101 1/4" = 1'-0"

GENERAL SECTION NOTES

1. FOR GENERAL STRUCTURAL NOTES, SEE SHEETS 00-S-002 AND STANDARD SPECIFICATIONS.
2. REINFORCEMENT CLEAR COVER TO BE 2" EF FOR WALLS, 2" AT TOP OF SLABS, AND 3" AT BOTTOM OF SLABS, TYP., UNO
3. ALL LAP SPLICES TO BE CLASS B PER DETAIL 1/00-S-101.
4. REFER TO MECHANICAL DRAWINGS FOR SIZE AND LOCATIONS OF PIPE PENETRATIONS AND WALL OPENINGS. SEE DETAIL 9/00-S-101 FOR TYPICAL REINFORCEMENT REQUIREMENTS. COORDINATE PIPE PENETRATION SEAL WITH EOR (WHERE OCCURS).
5. COORDINATE EQUIPMENT WEIGHT WITH EOR PRIOR TO INSTALLATION. SEE DETAIL 1/00-S-105 FOR TYPICAL EQUIPMENT ANCHORAGE AND EQUIPMENT PADS.

4' 2' 0' 4' 8'
1/4" = 1'-0"

60% SUBMITTAL - NOT FOR CONSTRUCTION

NO.	BY	CHK	APP	DATE	REVISIONS AND RECORD OF USE

Ashley & Vance ENGINEERING, INC
JOINT VENTURE
BLACK & VEATCH
FILANC

CITY OF MORRO BAY
MORRO BAY WRF
WATER RECLAMATION FACILITY (WRF)

MAINTENANCE BUILDING
STRUCTURAL
SECTIONS & DETAILS 1

DESIGNED: I. SHOEBRIDGE
DETAILED: S. BENJAMIN
CHECKED: Checker
APPROVED: Approver
DATE: XX/XX/XXXX

0 1/2 1
IF THIS BAR DOES NOT MEASURE 1" THEN DRAWING IS NOT TO FULL SCALE

PROJECT NO.
400530

S-96-301
SHEET
OF XXX

PLOTTED: 7/29/2019 8:04:15 PM
D400530

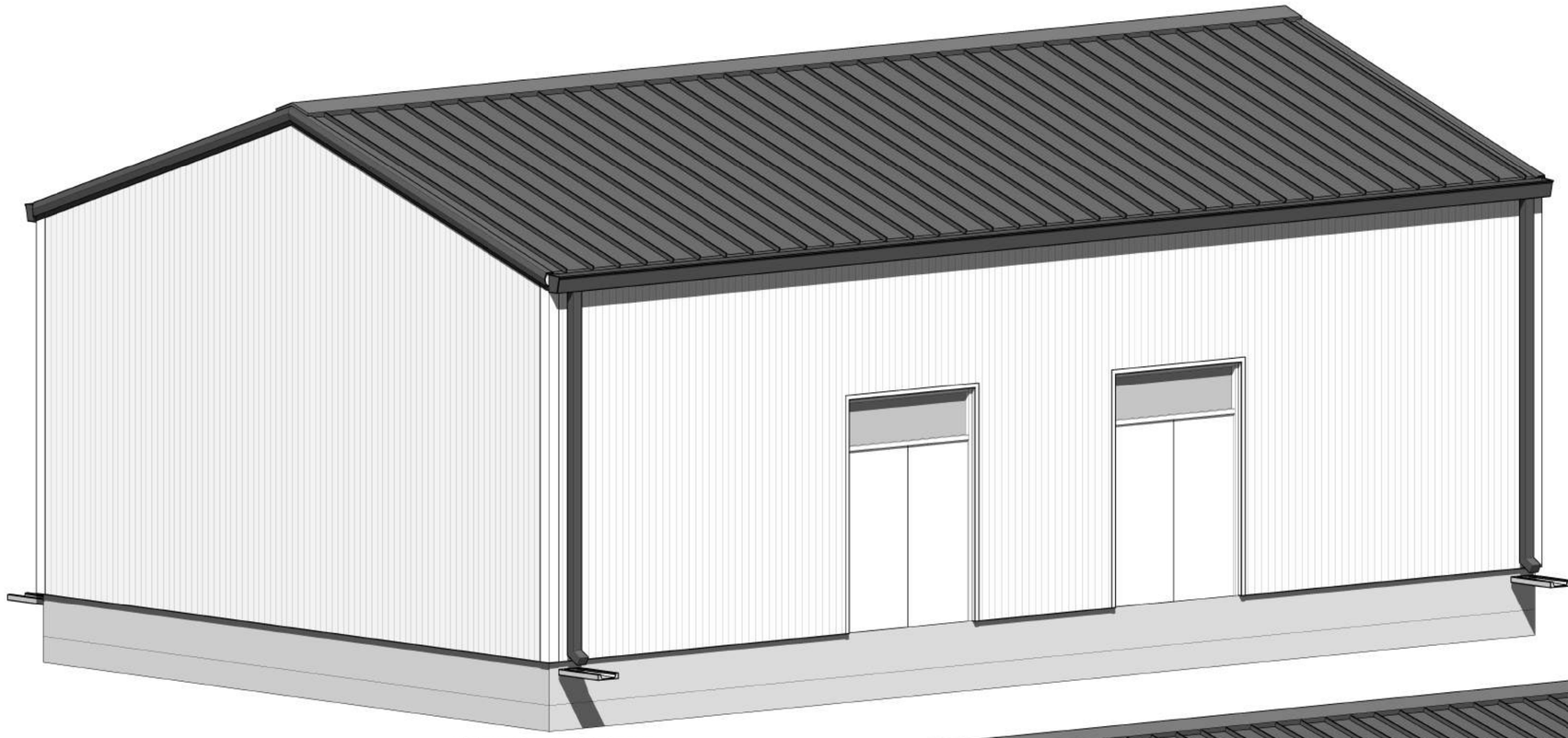

NORTHEAST PERSPECTIVE

NO SCALE

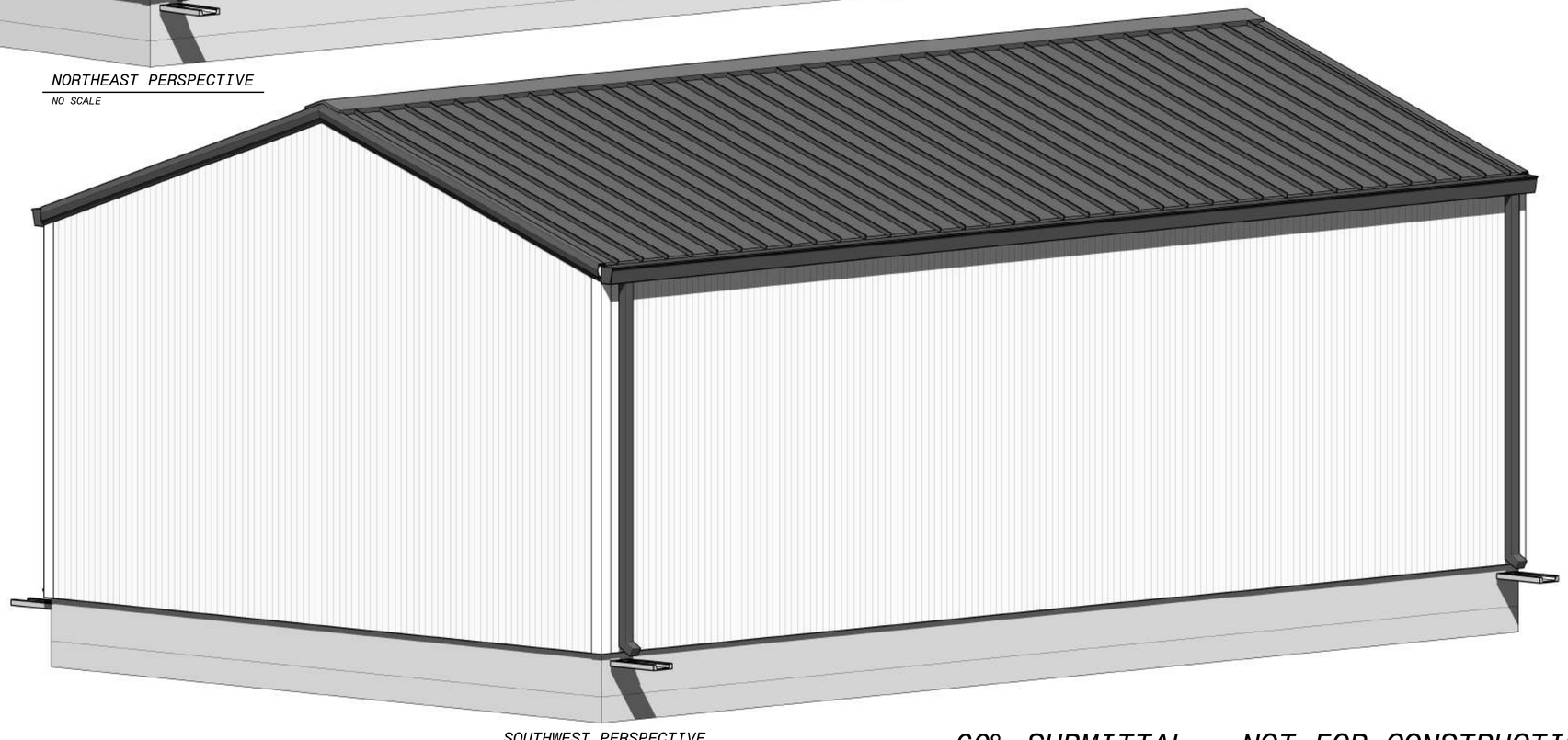

SOUTHWEST PERSPECTIVE

NO SCALE

60% SUBMITTAL - NOT FOR CONSTRUCTION

NO.	DATE	REVISIONS AND RECORD OF USE	BY	CHK	APP
	7/30/2019	60% SUBMITTAL	BDF	BDF	EVB
A	3/5/2019	30% SUBMITTAL	BDF	BDF	EVB
B					

FRASER SEIPLE ARCHITECTS

JOINT VENTURE

BLACK & VEATCH

FILANC

CITY OF MORRO BAY
MORRO BAY WATER
RECLAMATION FACILITY (WRF)

WATER AND COLLECTION SUPPLIES STORAGE SHED
ARCHITECTURAL
PERSPECTIVES

DESIGNED: EVB
DETAILED: ANH
CHECKED: -
APPROVED: -
DATE:

0 1/2 1

IF THIS BAR DOES NOT MEASURE 1" THEN DRAWING IS NOT TO FULL SCALE

PROJECT NO.
400530

16-A-001
SHEET
OF

PLOTTED: 7/30/2019 12:49:52 PM
D400530

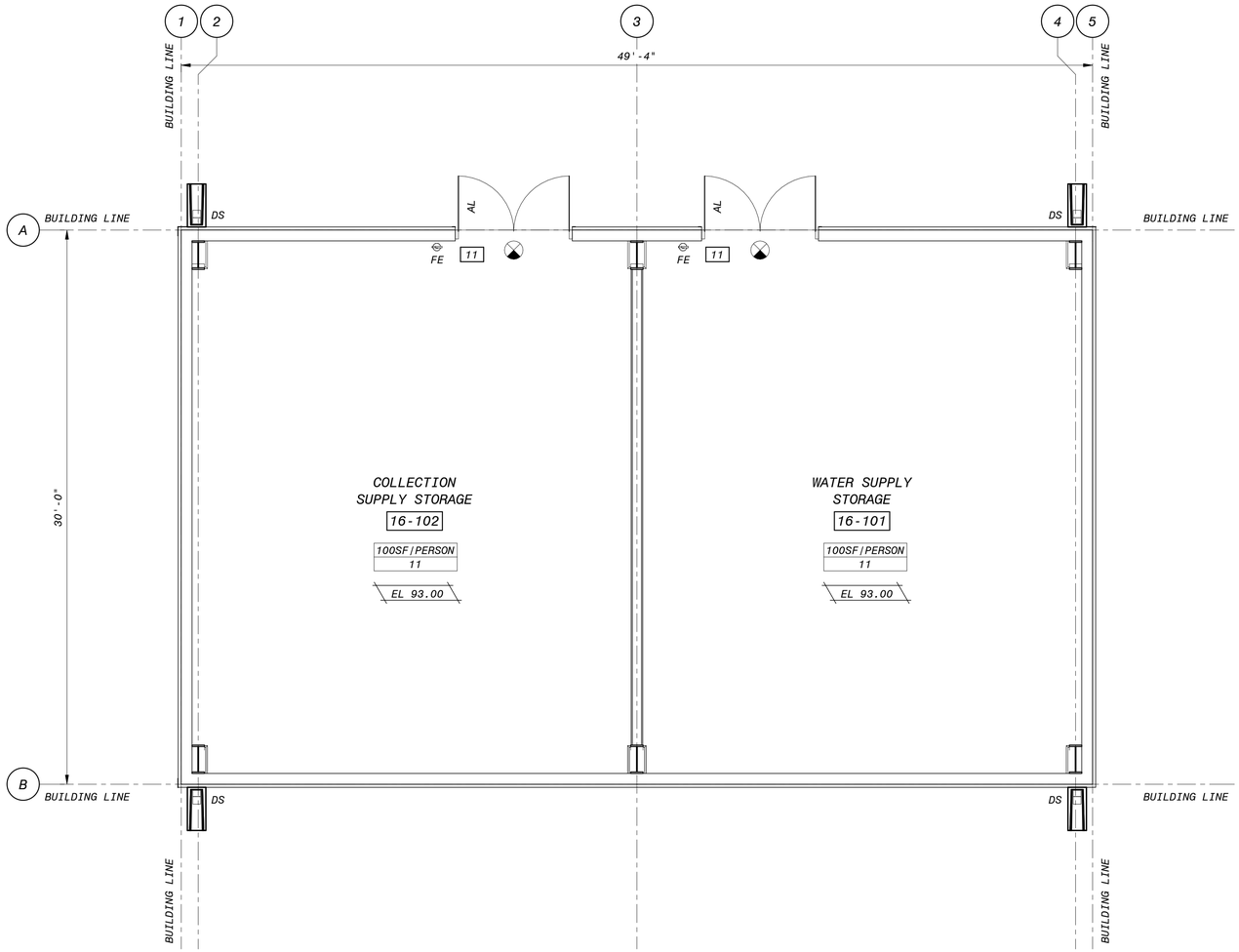

LIFE SAFETY PLAN

1/4" = 1'-0"

GENERAL SHEET NOTES

SHEET KEYNOTES

LIFE SAFETY LEGEND

	FIRE EXTINGUISHER (FE)
X'-X"	PATH OF EGRESS TRAVEL
100SF/PERSON / 10	OCCUPANTS PER SF / OCCUPANT LOAD
5	CUMULATIVE OCCUPANT LOAD AT EXIT
	EXIT SYMBOL
AL	ACTIVE LEAF
DS	DOWNSPOUT

BUILDING CODE ANALYSIS

STORAGE SUPPLY	
APPLICABLE BUILDING CODES:	
OCCUPANCY	-
ACTUAL FLOOR AREA	0,000 SF TOTAL
ACTUAL HEIGHT	1 STORY (20.33 FT)
TYPE OF CONSTRUCTION	TYPE --
ALLOWABLE HEIGHT	0,000 SF
ALLOWABLE AREA	2 STORIES (55 FT)
DESIGN OCCUPANT LOAD	0 PERSONS
ADA ACCESSIBILITY	-
OCCUPANCY SEPARATION	-
FIRE SPRINKLERS	-

4' 2' 0' 4' 8'

1/4" = 1'-0"

60% SUBMITTAL - NOT FOR CONSTRUCTION

NO.	BY	CHK	APP	DATE	REVISIONS AND RECORD OF USE
B	BDF	BDF	EVB	7/30/2019	60% SUBMITTAL

FRASER SEIPLE ARCHITECTS
BLACK & VEATCH
JOINT VENTURE
FILANC

CITY OF MORRO BAY
MORRO BAY WATER
RECLAMATION FACILITY (WRF)

WATER AND COLLECTION SUPPLIES STORAGE SHED
ARCHITECTURAL
LIFE SAFETY PLAN

DESIGNED: EVB
DETAILED: ANH
CHECKED: -
APPROVED: -
DATE:

0 1/2 1
IF THIS BAR DOES NOT MEASURE 1" THEN DRAWING IS NOT TO FULL SCALE

PROJECT NO.
400530

16-A-101
SHEET
OF

PLOTTED: 7/30/2019 12:49:53 PM
D400530

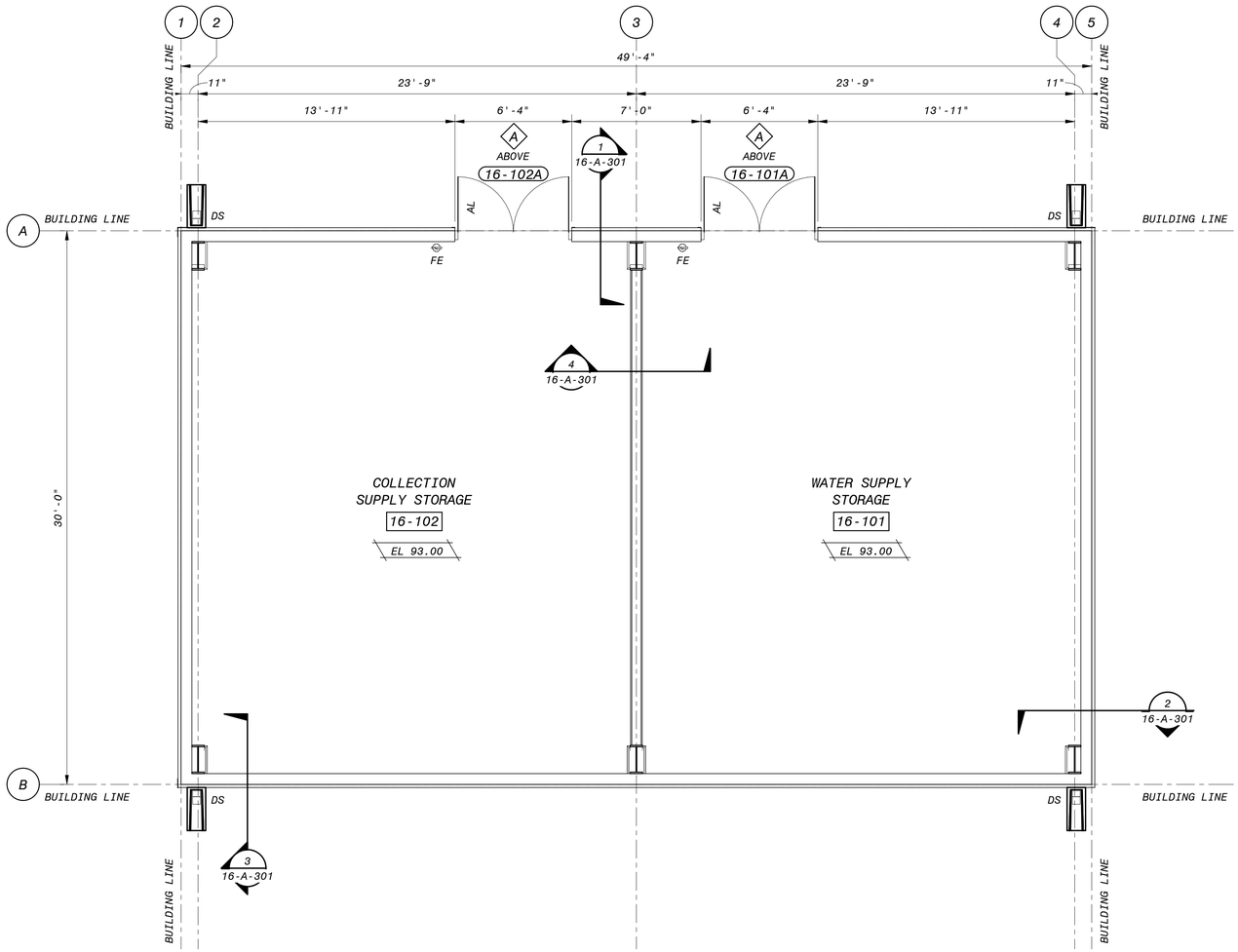

OPERATING FLOOR PLAN

1/4" = 1'-0"

GENERAL SHEET NOTES

SHEET KEYNOTES

4' 2' 0' 4' 8'

1/4" = 1'-0"

60% SUBMITTAL - NOT FOR CONSTRUCTION

NO.	BY	CHK	APP	DATE	REVISIONS AND RECORD OF USE
B	BDF	BDF	EVB	7/30/2019	60% SUBMITTAL

FRASER SEIPLE ARCHITECTS

JOINT VENTURE

BLACK & VEATCH

FILANC

CITY OF MORRO BAY
MORRO BAY WATER
RECLAMATION FACILITY (WRF)

WATER AND COLLECTION SUPPLIES STORAGE SHED
ARCHITECTURAL
OPERATING FLOOR PLAN

DESIGNED: EVB
DETAILED: ANH
CHECKED: -
APPROVED: -
DATE:

0 1/2 1

IF THIS BAR DOES NOT MEASURE 1" THEN DRAWING IS NOT TO FULL SCALE

PROJECT NO.
400530

16-A-102
SHEET
OF

PLOTTED: 7/30/2019 12:49:54 PM
D400530

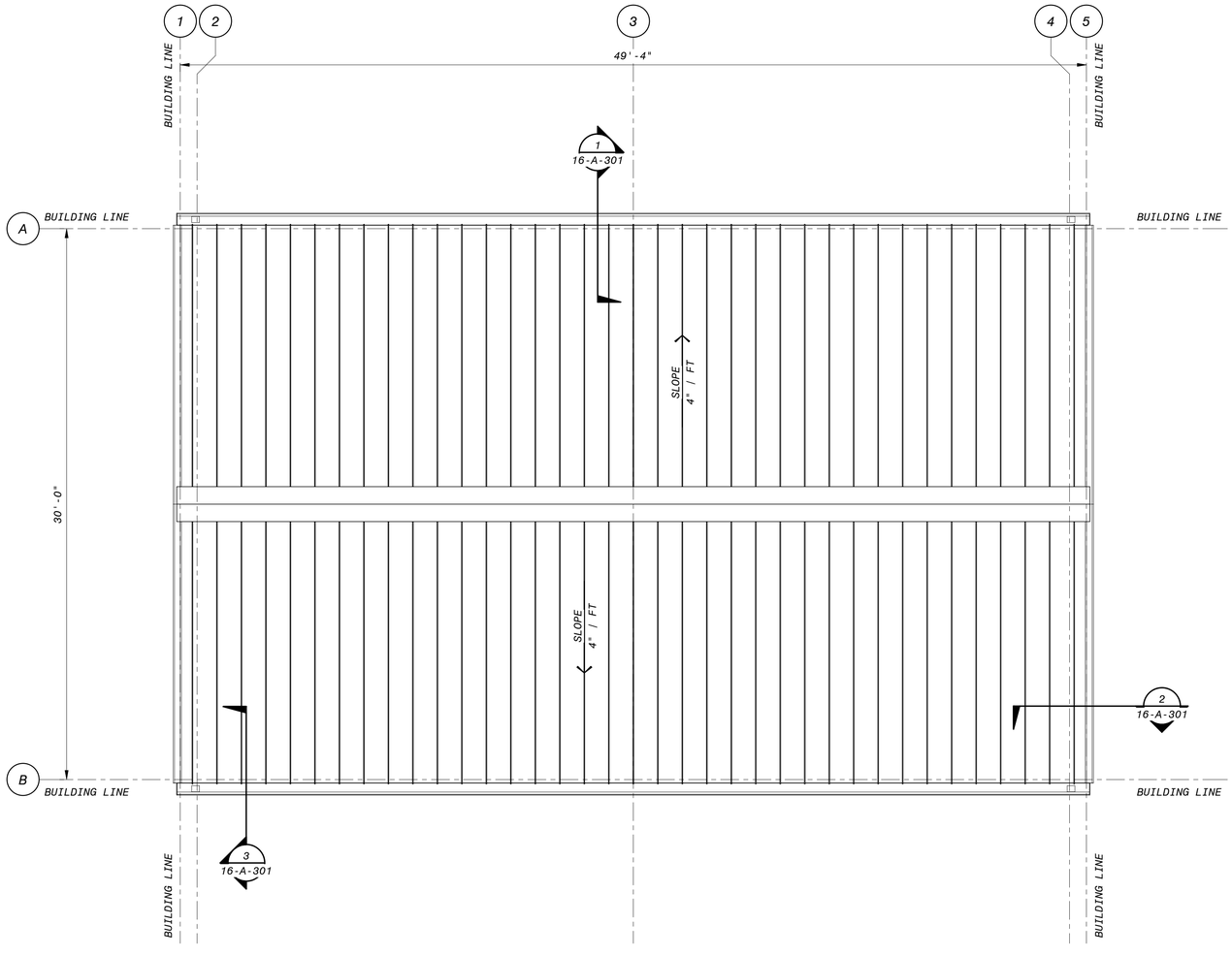

ROOF PLAN

1/4" = 1'-0"

GENERAL SHEET NOTES

SHEET KEYNOTES

4' 2' 0' 4' 8'

1/4" = 1'-0"

60% SUBMITTAL - NOT FOR CONSTRUCTION

NO.	BY	CHK	APP	DATE	REVISIONS AND RECORD OF USE
B	BDF	BDF	EVB	7/30/2019	60% SUBMITTAL

FRASER SEIPLE ARCHITECTS

JOINT VENTURE

BLACK & VEATCH

FILANC

CITY OF MORRO BAY
MORRO BAY WATER
RECLAMATION FACILITY (WRF)

WATER AND COLLECTION SUPPLIES STORAGE SHED
ARCHITECTURAL
ROOF PLAN

DESIGNED: EVB
DETAILED: ANH
CHECKED: -
APPROVED: -
DATE:

0 1/2 1

IF THIS BAR DOES NOT MEASURE 1" THEN DRAWING IS NOT TO FULL SCALE

PROJECT NO.
400530

16-A-103
SHEET
OF

PLOTTED: 7/30/2019 12:49:54 PM
D400530

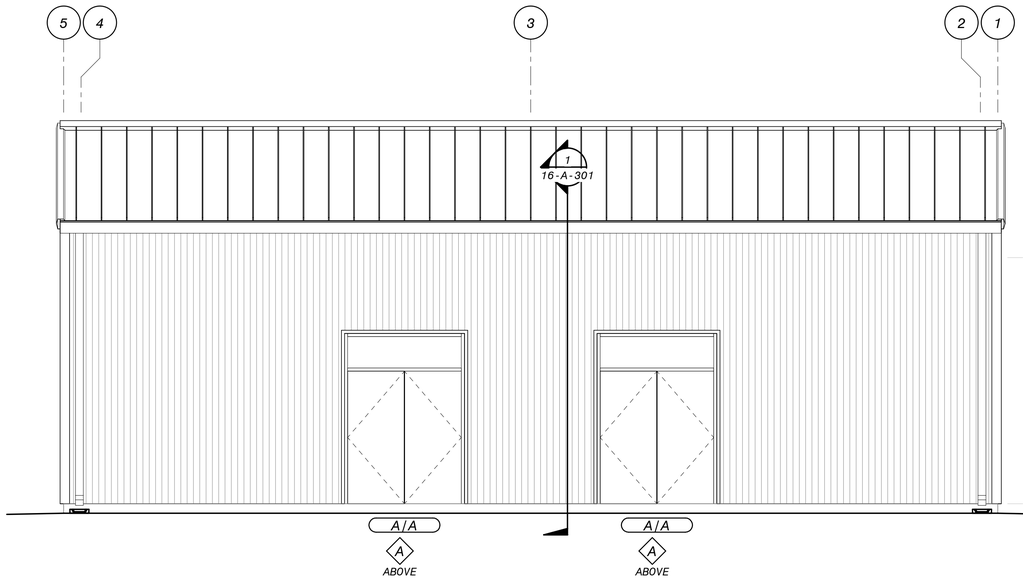

NORTH ELEVATION

1/4" = 1'-0"

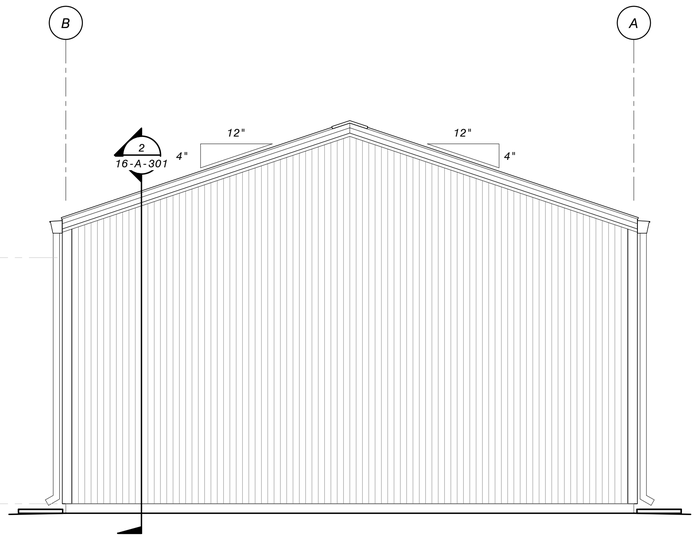

EAST ELEVATION

1/4" = 1'-0"

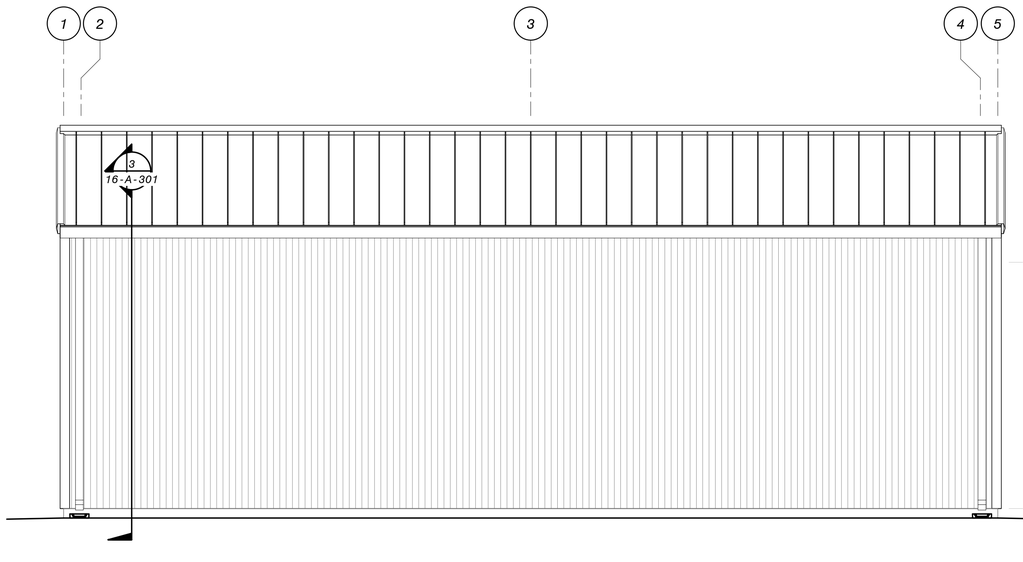

SOUTH ELEVATION

1/4" = 1'-0"

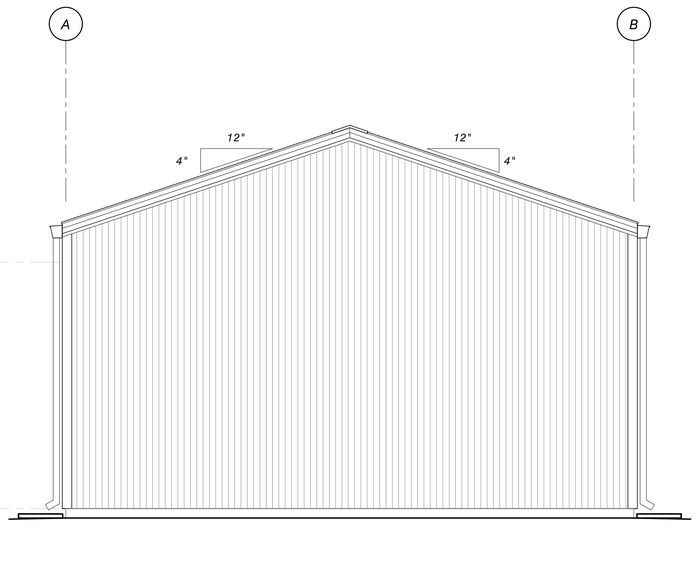

WEST ELEVATION

1/4" = 1'-0"

4' 2' 0' 4' 8'

1/4" = 1'-0"

60% SUBMITTAL - NOT FOR CONSTRUCTION

GENERAL SHEET NOTES

SHEET KEYNOTES

NO.	BY	CHK	APP	DATE	REVISIONS AND RECORD OF USE
B	BDF	BDF	EVB	7/30/2019	60% SUBMITTAL

FRASER SEIPLE ARCHITECTS

JOINT VENTURE

BLACK & VEATCH

FILANC

CITY OF MORRO BAY
MORRO BAY WATER
RECLAMATION FACILITY (WRF)

WATER AND COLLECTION SUPPLIES STORAGE SHED
ARCHITECTURAL
BUILDING ELEVATIONS

DESIGNED: EVB
DETAILED: ANH
CHECKED: -
APPROVED: -
DATE:

0 1/2 1

IF THIS BAR DOES NOT MEASURE 1" THEN DRAWING IS NOT TO FULL SCALE

PROJECT NO.
400530

16-A-201
SHEET
OF

PLOTTED: 7/30/2019 12:49:55 PM
D400530

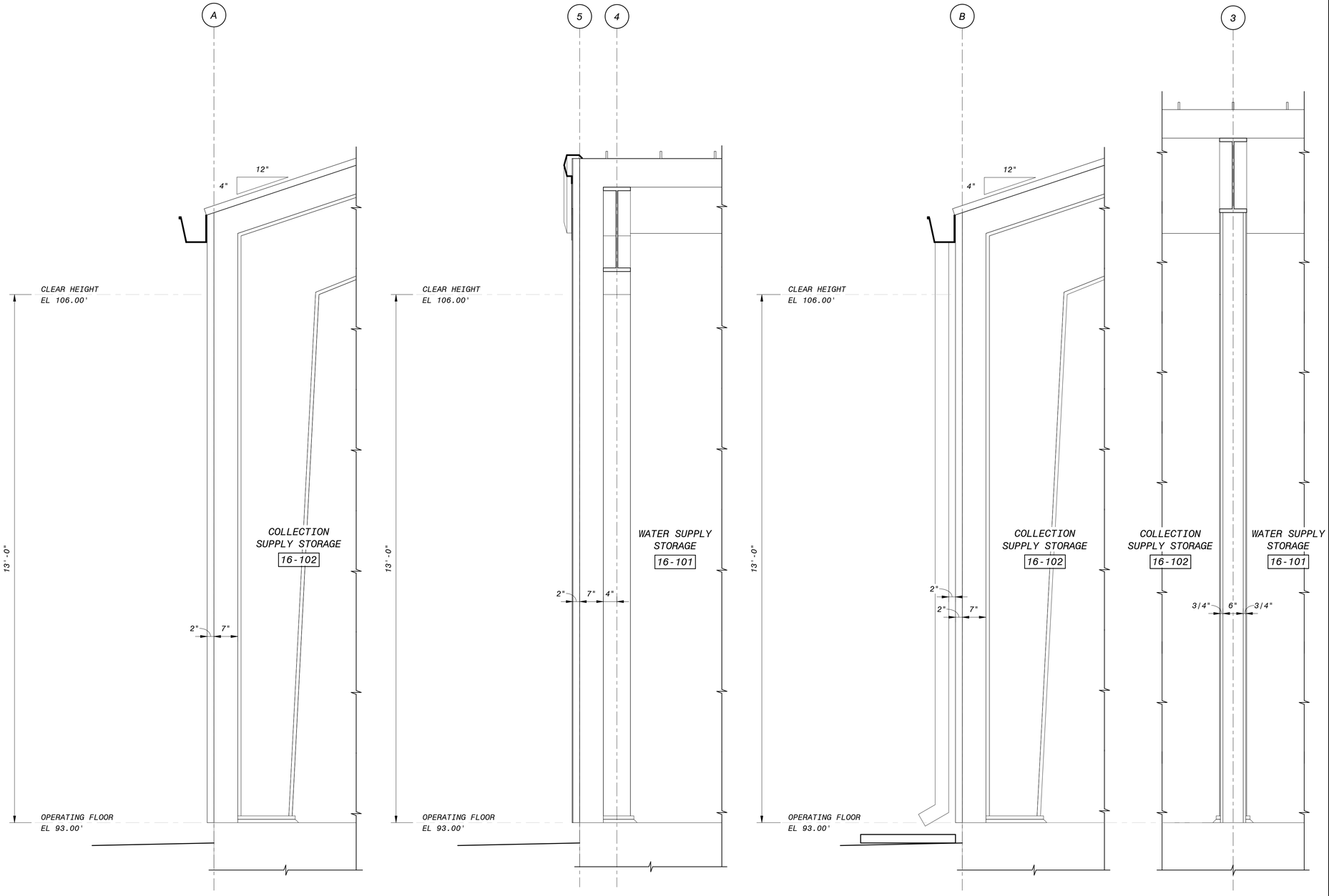

1 SECTION
16-A-102 3/4" = 1'-0"

2 SECTION
16-A-102 3/4" = 1'-0"

3 SECTION
16-A-102 3/4" = 1'-0"

4 SECTION
16-A-102 3/4" = 1'-0"

12" 6" 0' 1' 2' 3'
3/4" = 1'-0"

60% SUBMITTAL - NOT FOR CONSTRUCTION

GENERAL SHEET NOTES

SHEET KEYNOTES

NO.	BY	CHK	APP	DATE	REVISIONS AND RECORD OF USE
B				7/30/2019	60% SUBMITTAL

FRASER SEIPLE ARCHITECTS
JOINT VENTURE
BLACK & VEATCH
FILANC

CITY OF MORRO BAY
MORRO BAY WATER
RECLAMATION FACILITY (WRF)

WATER AND COLLECTION SUPPLIES STORAGE SHED
ARCHITECTURAL
WALL SECTIONS

DESIGNED: EVB
DETAILED: ANH
CHECKED: -
APPROVED: -
DATE:

0 1/2 1
IF THIS BAR DOES NOT MEASURE 1" THEN DRAWING IS NOT TO FULL SCALE

PROJECT NO.
400530

16-A-301
SHEET
OF

PLOTTED: 7/30/2019 12:49:55 PM
D400530

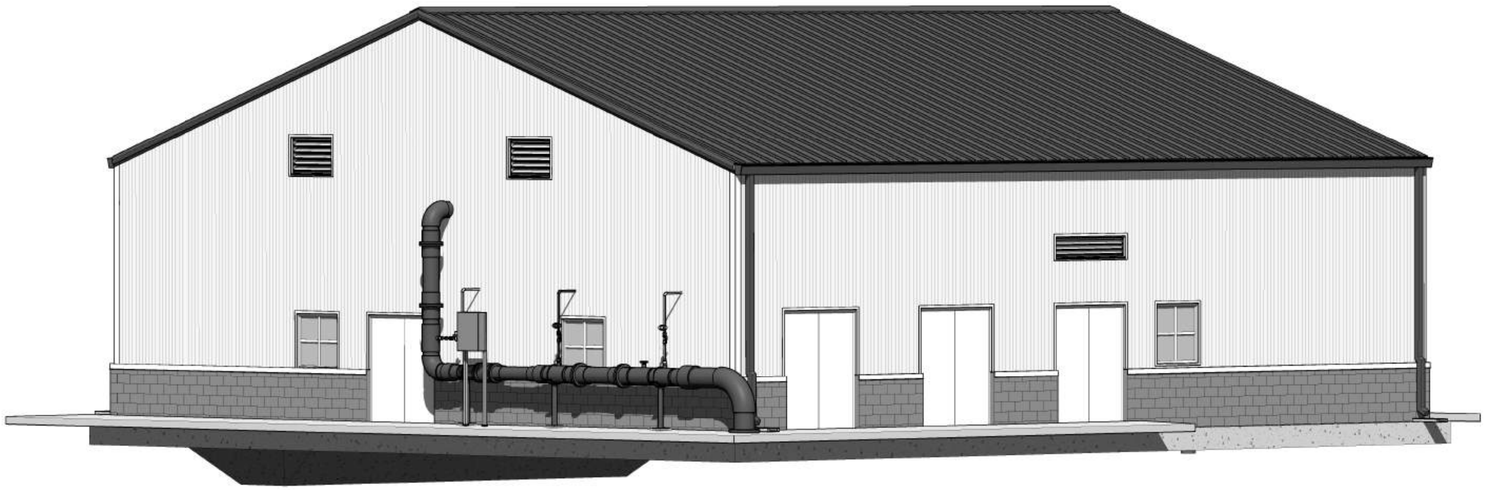

NORTHWEST PERSPECTIVE

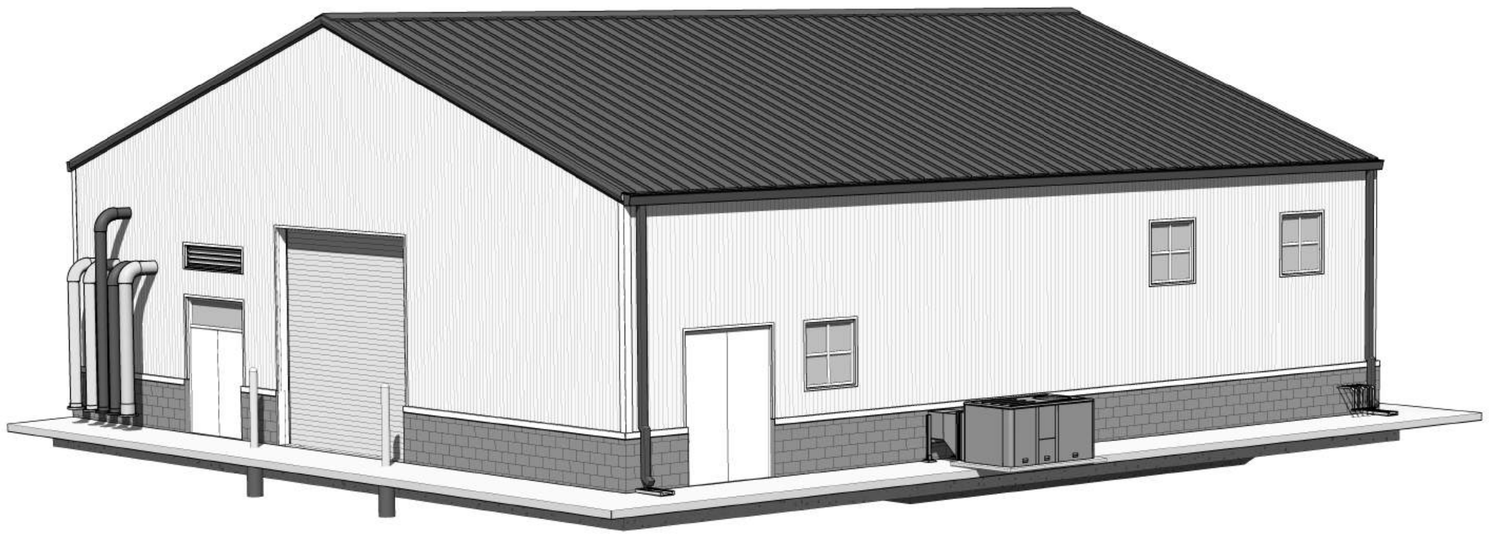

SOUTHEAST PERSPECTIVE

60% SUBMITTAL - NOT FOR CONSTRUCTION

NO.	BY	CHK	APP	DATE	REVISIONS AND RECORD OF USE
B	BDF	BDF	EVB	7/30/2019	60% SUBMITTAL
A	BDF	BDF	EVB	3/5/2019	30% SUBMITTAL

FRASER SEIPLE ARCHITECTS

JOINT VENTURE

BLACK & VEATCH

FILANC

CITY OF MORRO BAY
MORRO BAY WATER
RECLAMATION FACILITY (WRF)

RO/UV BUILDING
ARCHITECTURAL
PERSPECTIVES

DESIGNED: BDF
DETAILED: ANH
CHECKED: -
APPROVED: -
DATE:

0 1/2 1
IF THIS BAR DOES NOT MEASURE 1" THEN DRAWING IS NOT TO FULL SCALE

PROJECT NO.
400530

50-A-001
SHEET
OF

PLOTTED: 7/30/2019 11:52:56 AM
D400530

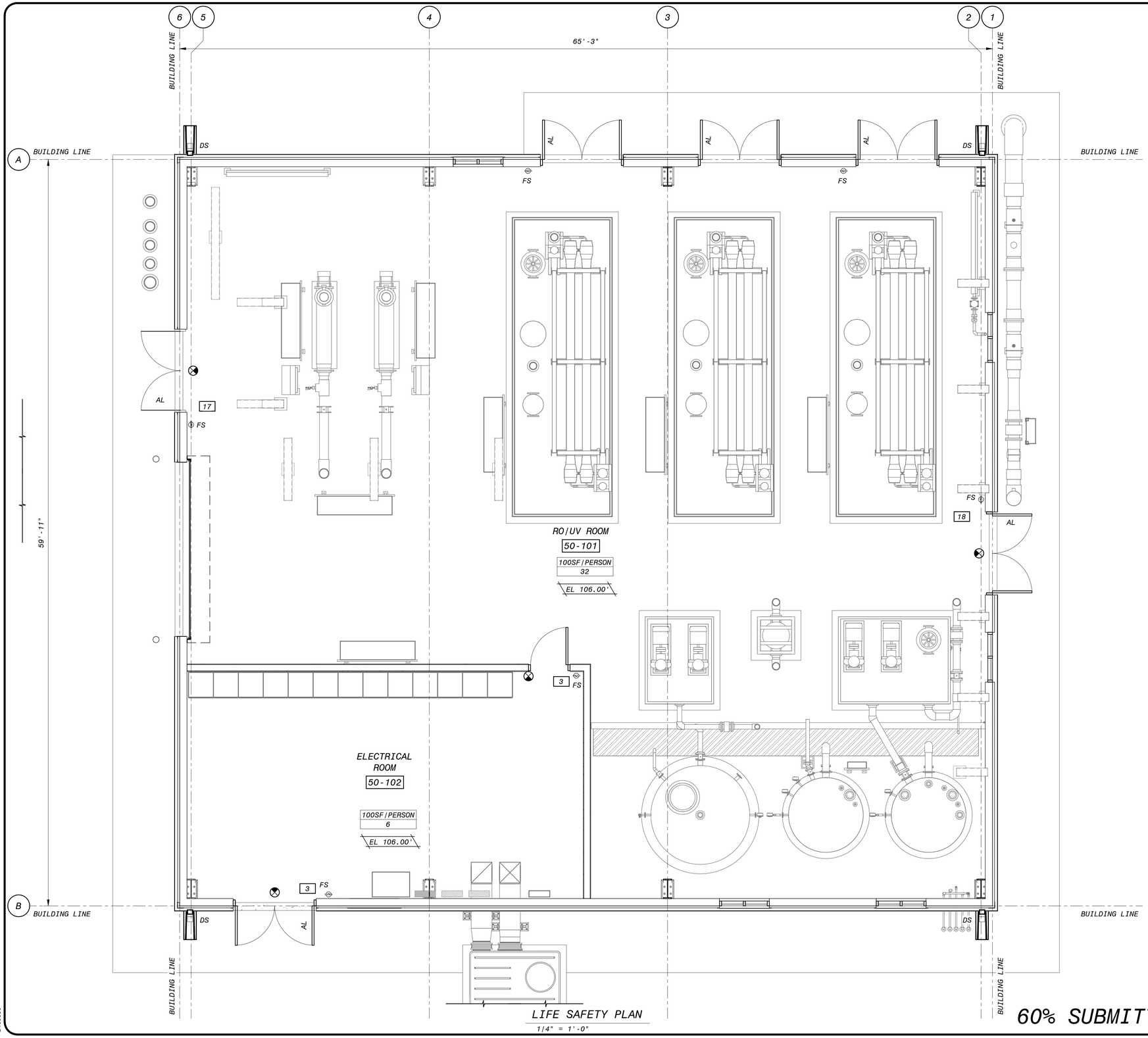

LIFE SAFETY PLAN
1/4" = 1'-0"

GENERAL SHEET NOTES

SHEET KEYNOTES

LIFE SAFETY LEGEND

FS	FIRE EXTINGUISHER (FE)
X'-X"	PATH OF EGRESS TRAVEL
100SF/PERSON / 10	OCCUPANTS PER SF OCCUPANT LOAD
1	CUMULATIVE OCCUPANT LOAD AT EXIT
	EXIT SYMBOL
AL	ACTIVE LEAF
DS	DOWNSPOUT

BUILDING CODE ANALYSIS

RO/UV BUILDING	
APPLICABLE BUILDING CODES:	
OCCUPANCY	-
ACTUAL FLOOR AREA	0,000 SF TOTAL
ACTUAL HEIGHT	1 STORY (20.33 FT)
TYPE OF CONSTRUCTION	TYPE --
ALLOWABLE HEIGHT	0,000 SF
ALLOWABLE AREA	2 STORIES (55 FT)
DESIGN OCCUPANT LOAD	0 PERSONS
ADA ACCESSIBILITY	-
OCCUPANCY SEPARATION	-
FIRE SPRINKLERS	-

4' 2' 0' 4' 8'
1/4" = 1'-0"

60% SUBMITTAL - NOT FOR CONSTRUCTION

NO.	BY	CHK	APP
B	BDF	BDF	EVB

60% SUBMITTAL
REVISIONS AND RECORD OF USE
DATE: 7/30/2019

FRASER SEIPLE ARCHITECTS
JOINT VENTURE
BLACK & VEATCH
FILANC

CITY OF MORRO BAY
MORRO BAY WATER
RECLAMATION FACILITY (WRF)

RO/UV BUILDING
ARCHITECTURAL
LIFE SAFETY PLAN

DESIGNED: BDF
DETAILED: ANH
CHECKED: -
APPROVED: -
DATE:

0 1/2 1
IF THIS BAR DOES NOT MEASURE 1" THEN DRAWING IS NOT TO FULL SCALE

PROJECT NO.
400530

50-A-101
SHEET
OF

PLOTTED: 7/30/2019 11:52:58 AM
D400530

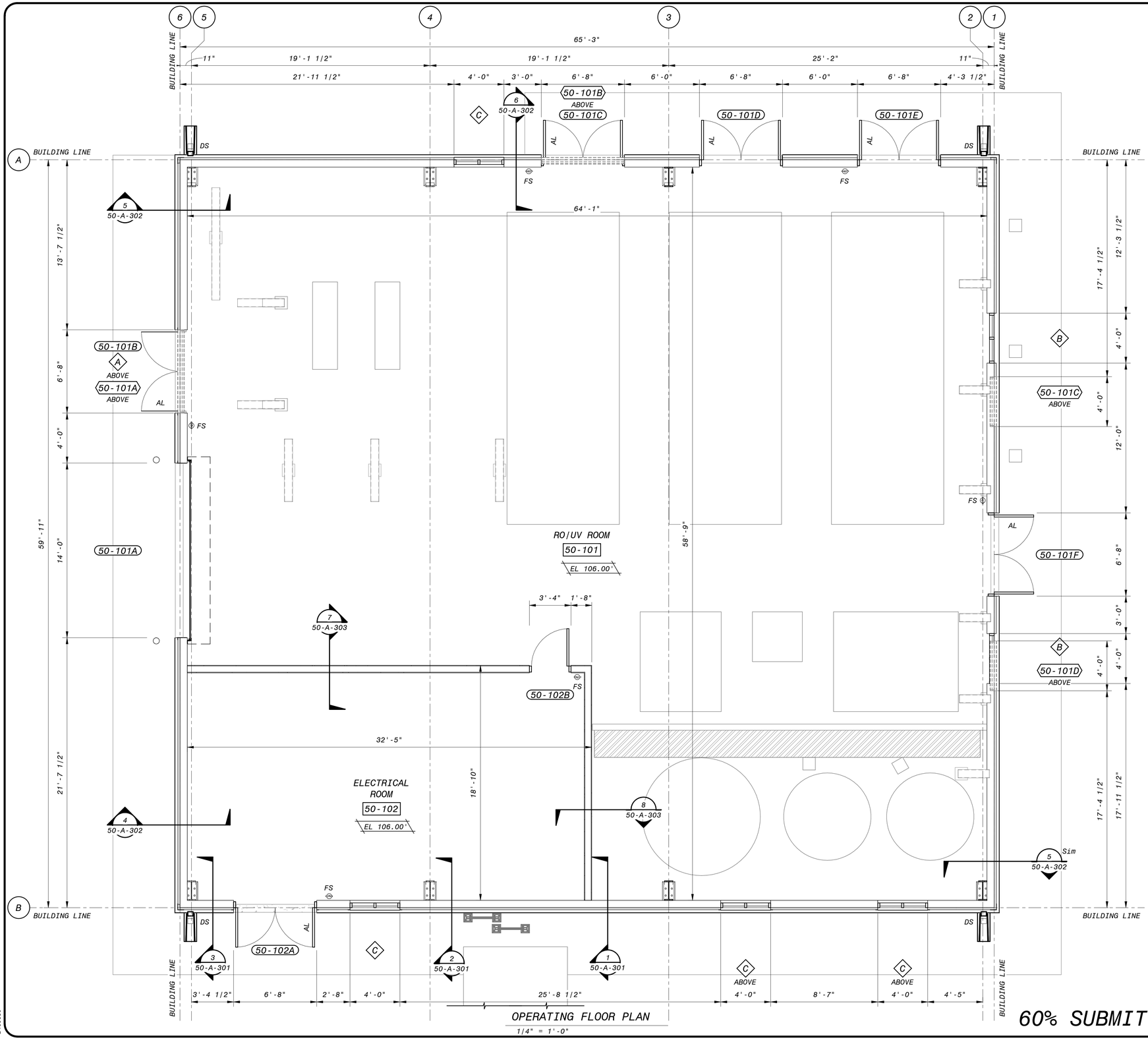

OPERATING FLOOR PLAN

1/4" = 1'-0"

4' 2' 0' 4' 8'

1/4" = 1'-0"

60% SUBMITTAL - NOT FOR CONSTRUCTION

GENERAL SHEET NOTES

SHEET KEYNOTES

NO.	BY	CHK	APP	DATE	REVISIONS AND RECORD OF USE
B	BDF	BDF	EVB	7/30/2019	60% SUBMITTAL
A	BDF	BDF	EVB	3/5/2019	30% SUBMITTAL

FRASER SEIPLE ARCHITECTS
JOINT VENTURE
BLACK & VEATCH
FILANC

CITY OF MORRO BAY
MORRO BAY WATER
RECLAMATION FACILITY (WRF)

RO/UV BUILDING
ARCHITECTURAL
OPERATING FLOOR PLAN

DESIGNED: BDF
DETAILED: ANH
CHECKED: -
APPROVED: -
DATE:

0 1/2 1
IF THIS BAR DOES NOT MEASURE 1" THEN DRAWING IS NOT TO FULL SCALE

PROJECT NO.
400530

50-A-102
SHEET
OF

PLOTTED: 7/30/2019 11:52:59 AM
D400530

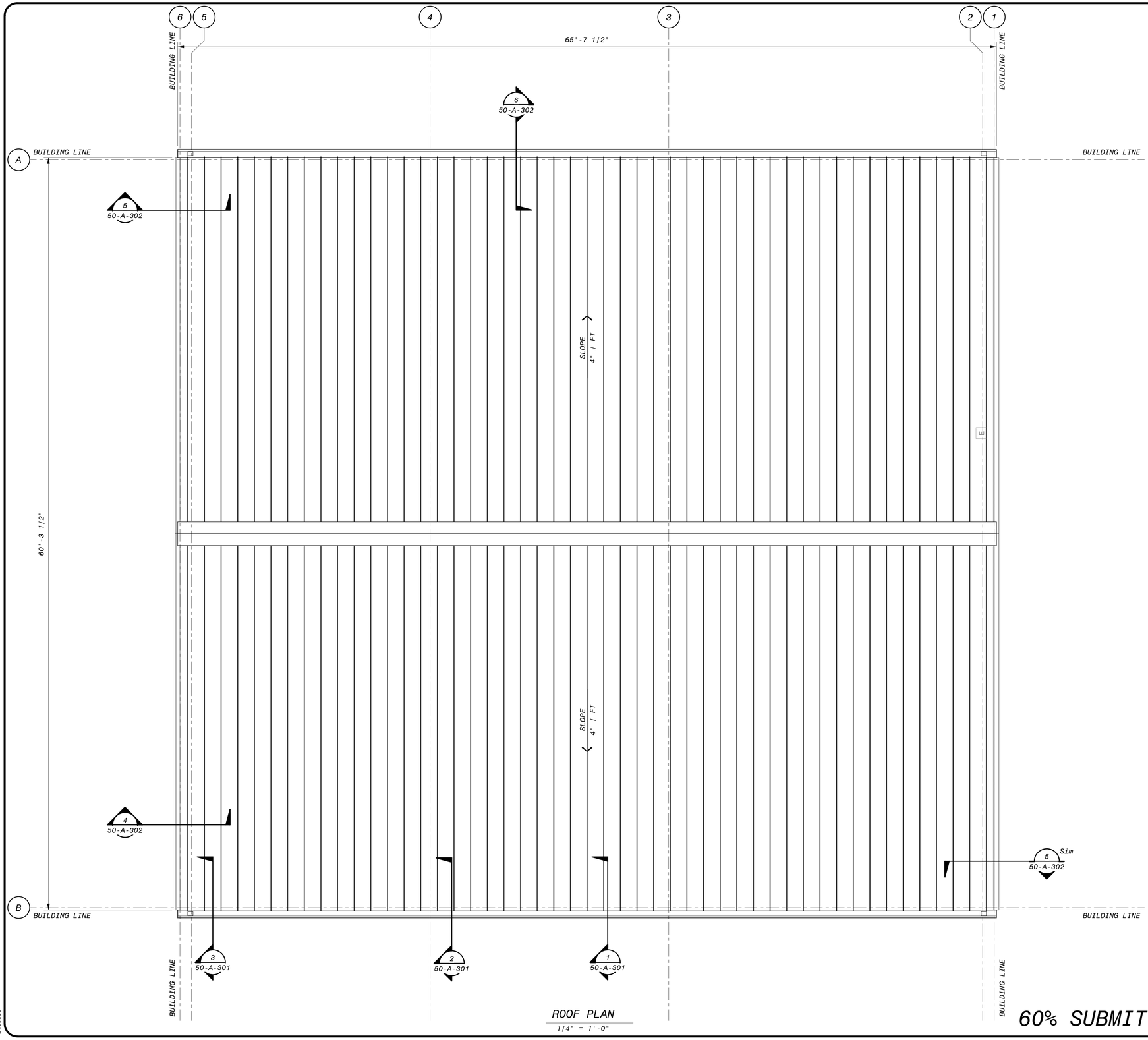

ROOF PLAN
1/4" = 1'-0"

4' 2' 0' 4' 8'
1/4" = 1'-0"

60% SUBMITTAL - NOT FOR CONSTRUCTION

GENERAL SHEET NOTES

SHEET KEYNOTES

NO.	BY	CHK	APP
B	BDF	EVB	

DATE	REVISIONS AND RECORD OF USE
7/30/2019	60% SUBMITTAL

FRASER SEIPLE ARCHITECTS
JOINT VENTURE
BLACK & VEATCH
FILANC

CITY OF MORRO BAY
MORRO BAY WATER
RECLAMATION FACILITY (WRF)

RO/UV BUILDING
ARCHITECTURAL
ROOF PLAN

DESIGNED: BDF
DETAILED: ANH
CHECKED: -
APPROVED: -
DATE:

0 1/2 1
IF THIS BAR DOES NOT MEASURE 1" THEN DRAWING IS NOT TO FULL SCALE

PROJECT NO.
400530

50-A-103
SHEET
OF

PLOTTED: 7/30/2019 11:52:59 AM
D400530

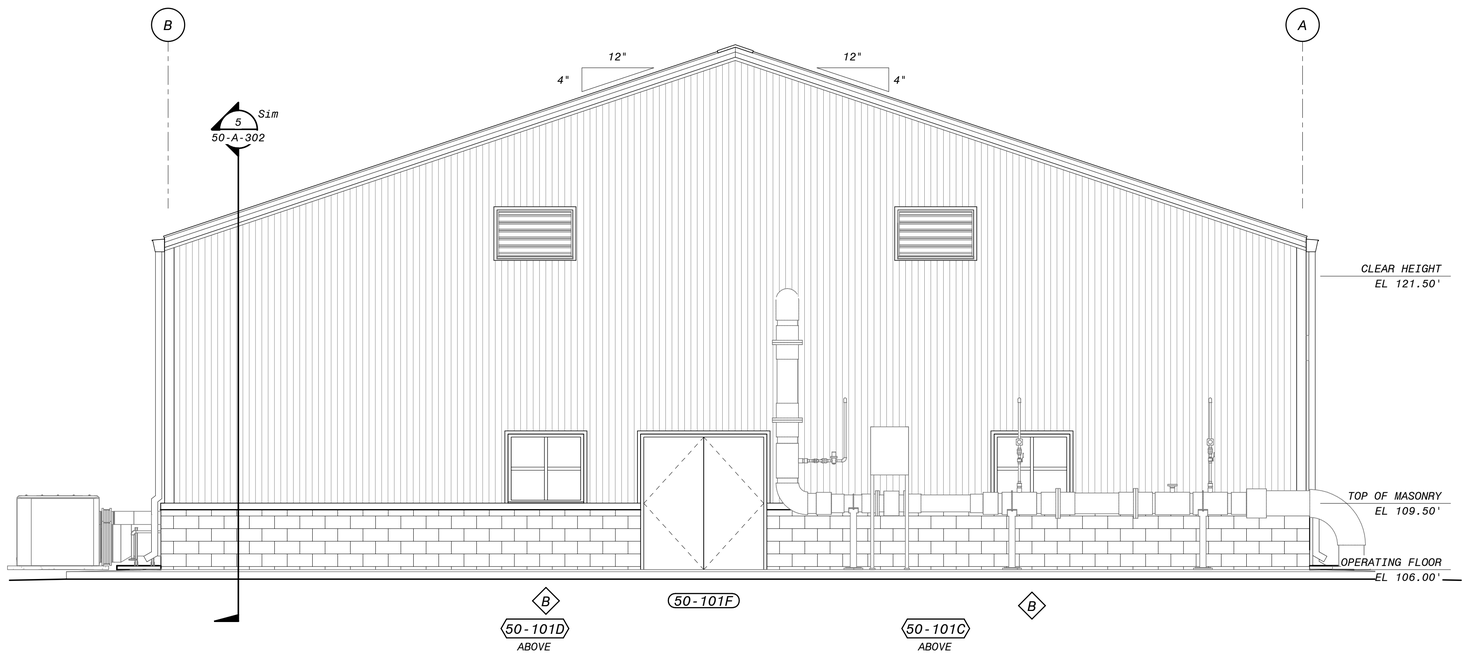

NORTH ELEVATION

1/4" = 1'-0"

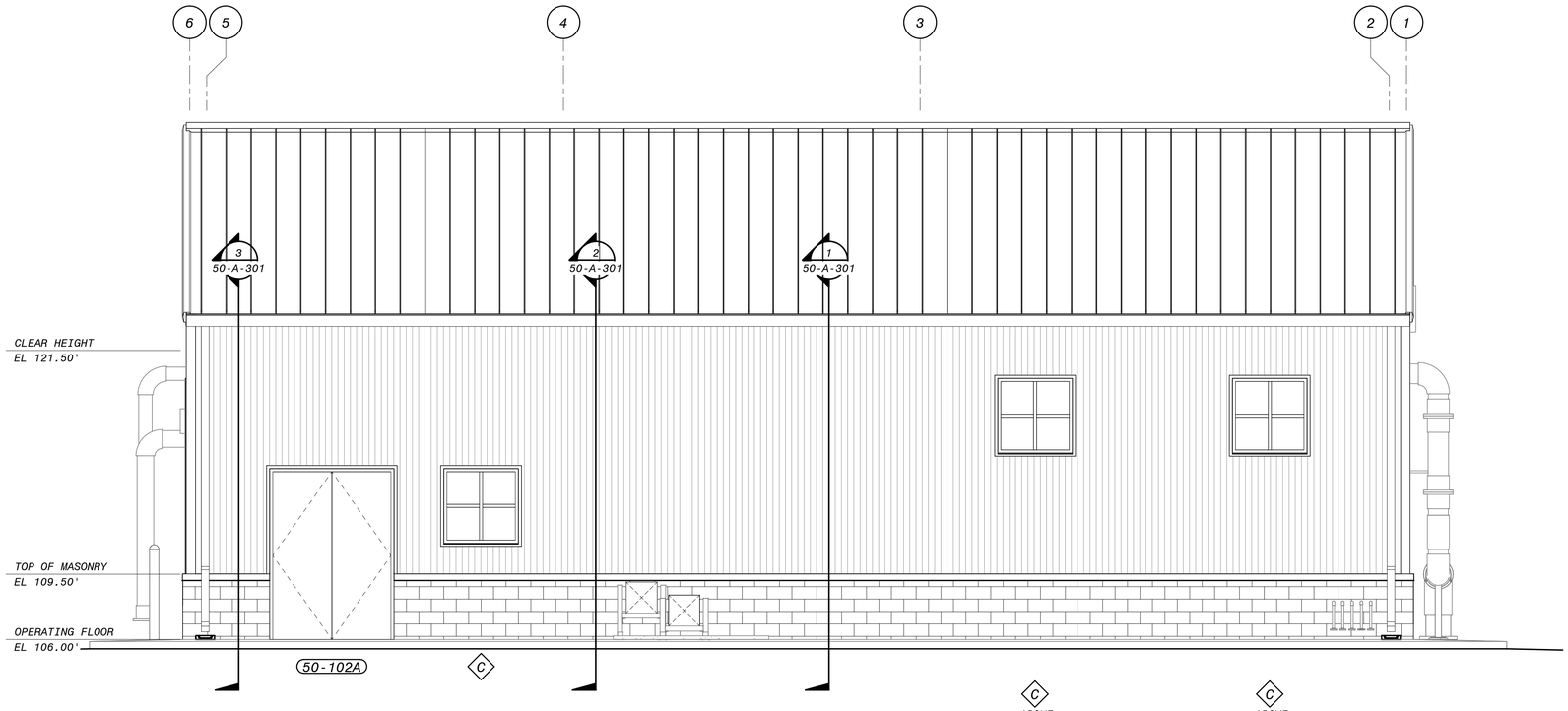

EAST ELEVATION

1/4" = 1'-0"

4' 2' 0' 4' 8'

1/4" = 1'-0"

60% SUBMITTAL - NOT FOR CONSTRUCTION

GENERAL SHEET NOTES

SHEET KEYNOTES

NO.	BY	CHK	APP	DATE	REVISIONS AND RECORD OF USE
B	BDF	BDF	EVB	7/30/2019	60% SUBMITTAL

FRASER SEIPLE ARCHITECTS

JOINT VENTURE

BLACK & VEATCH

FILANC

CITY OF MORRO BAY
MORRO BAY WATER
RECLAMATION FACILITY (WRF)

RO/UV BUILDING
ARCHITECTURAL
BUILDING ELEVATIONS

DESIGNED: BDF
DETAILED: ANH
CHECKED: -
APPROVED: -
DATE:

0 1/2 1

IF THIS BAR DOES NOT MEASURE 1" THEN DRAWING IS NOT TO FULL SCALE

PROJECT NO.
400530

50-A-201
SHEET
OF

PLOTTED: 7/30/2019 11:53:02 AM
D400530



SOUTH ELEVATION

1/4" = 1'-0"

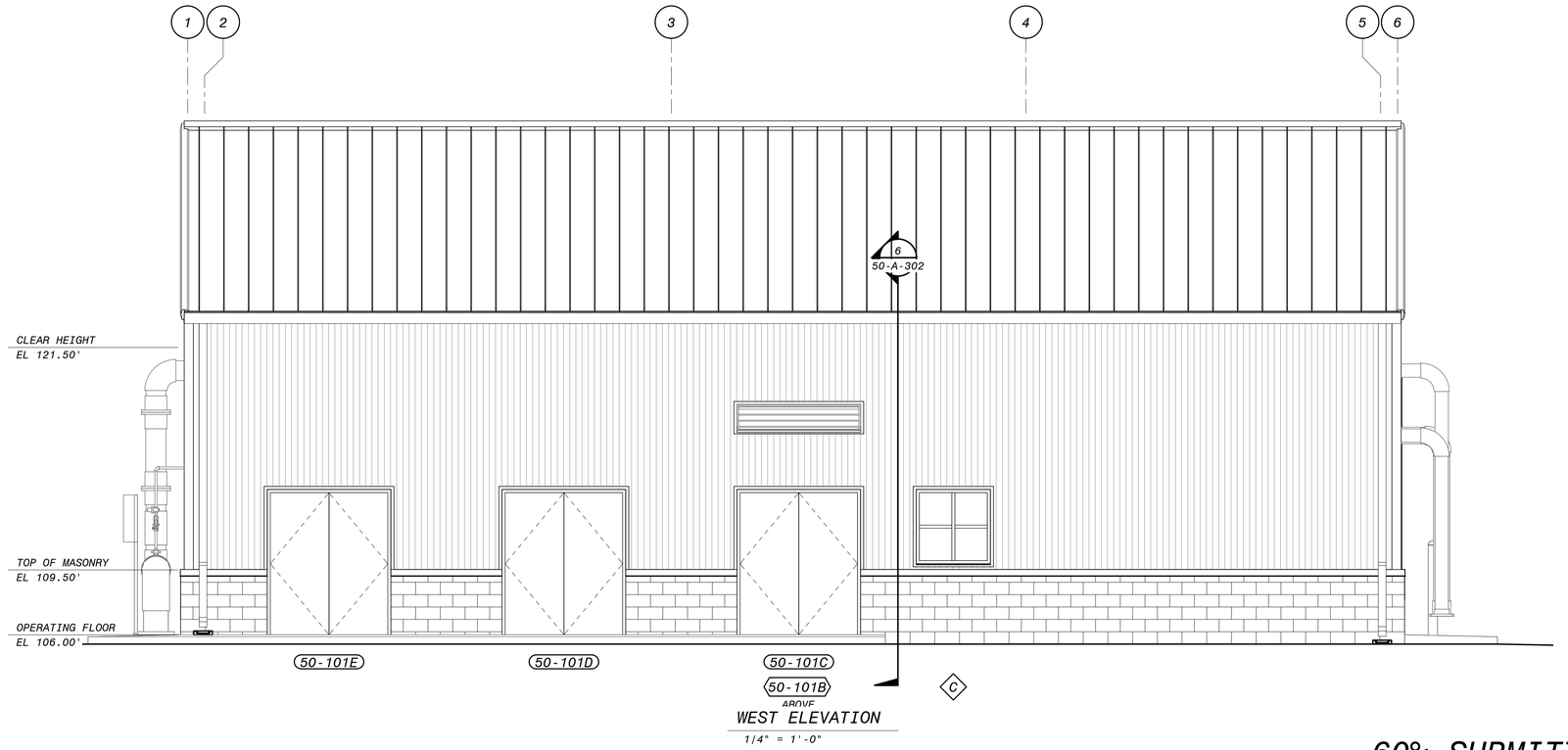

WEST ELEVATION

1/4" = 1'-0"

GENERAL SHEET NOTES

SHEET KEYNOTES

NO.	BY	CHK	APP
B	BDF	BDF	EVB

60% SUBMITTAL — REVISIONS AND RECORD OF USE — 7/30/2019

BLACK & VEATCH

FRASER SEIPLE ARCHITECTS

JOINT VENTURE

FILANC

CITY OF MORRO BAY
MORRO BAY WATER RECLAMATION FACILITY (WRF)

RO/UV BUILDING
ARCHITECTURAL
BUILDING ELEVATIONS

DESIGNED: BDF
DETAILED: ANH
CHECKED: -
APPROVED: -
DATE:

0 1/2 1

IF THIS BAR DOES NOT MEASURE 1" THEN DRAWING IS NOT TO FULL SCALE

4' 2' 0' 4' 8'

1/4" = 1'-0"

PROJECT NO.
400530

50-A-202
SHEET
OF

60% SUBMITTAL - NOT FOR CONSTRUCTION

PLOTTED: 7/30/2019 11:53:04 AM
D400530

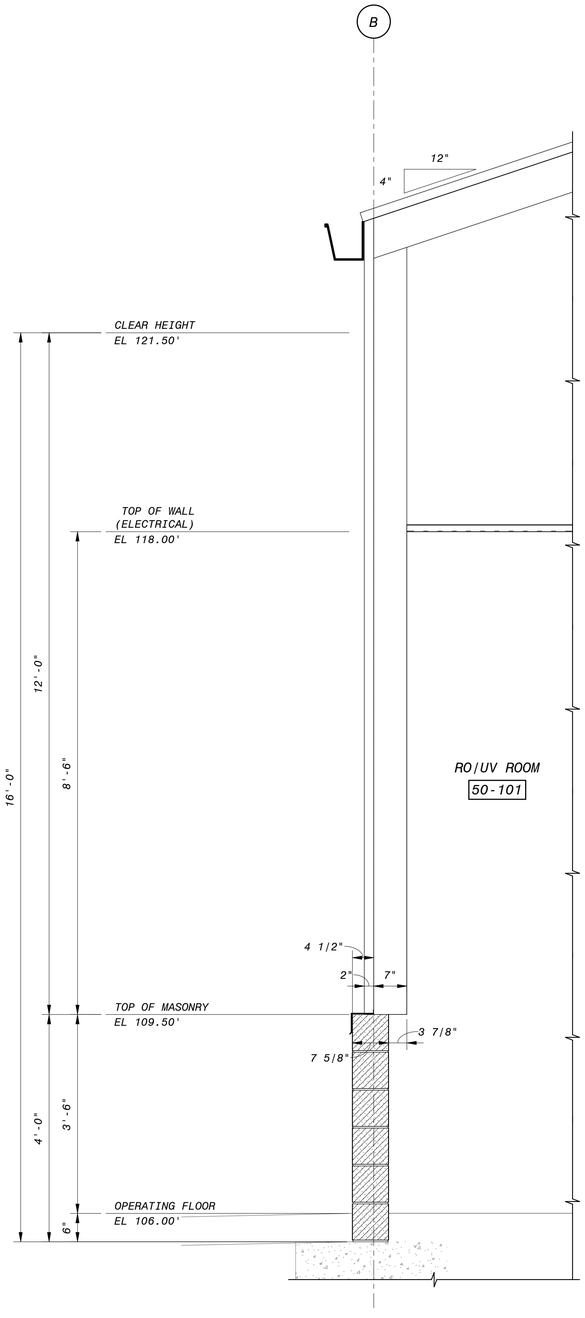

1 SECTION
50-A-102 3/4" = 1'-0"

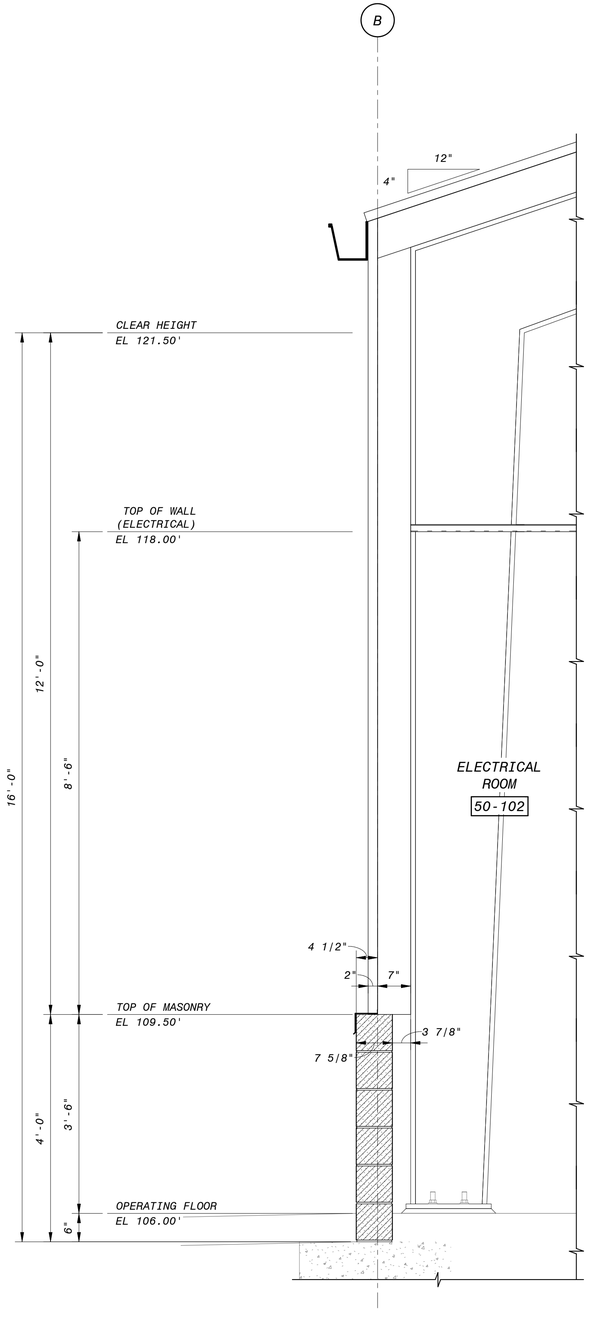

2 SECTION
50-A-102 3/4" = 1'-0"

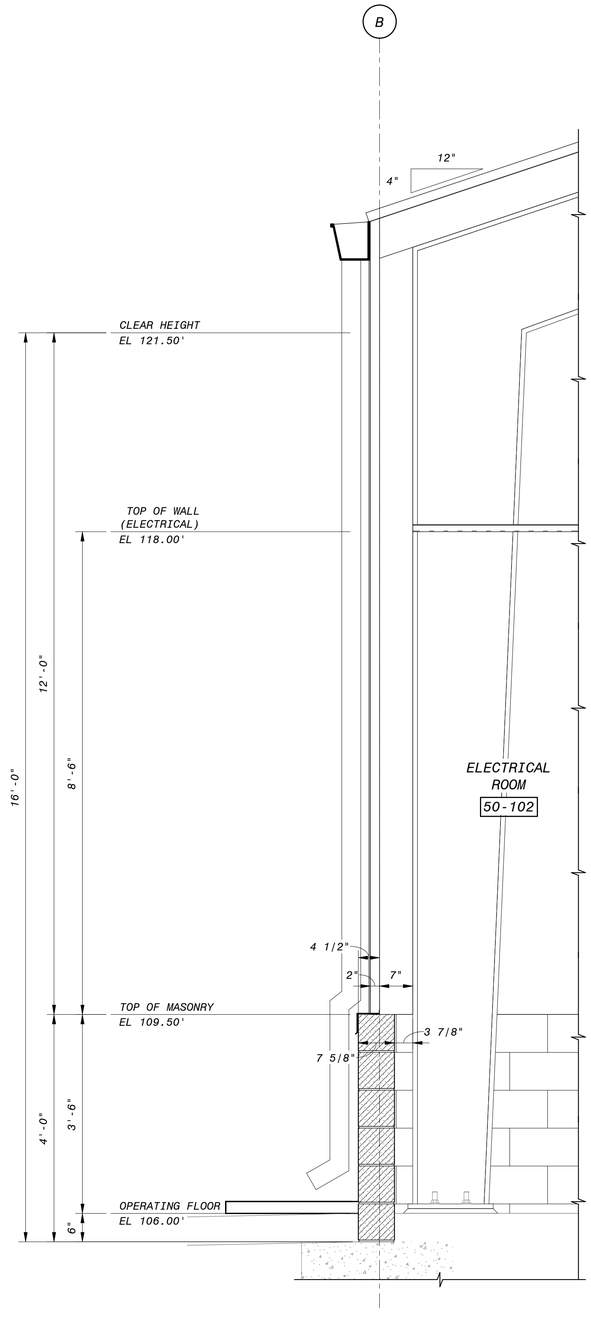

3 SECTION
50-A-102 3/4" = 1'-0"

GENERAL SHEET NOTES

1. FOR VERTICAL REINFORCING AND BOND BEAMS IN MASONRY DESIGN - SEE STRUCTURAL DRAWINGS
2. FOR HORIZONTAL JOINT REINFORCING - SEE SPECIFICATION SECTION 04200

SHEET KEYNOTES

12" 6" 0' 1' 2' 3'
3/4" = 1'-0"

60% SUBMITTAL - NOT FOR CONSTRUCTION

NO.	BY	CHK	APP	DATE	REVISIONS AND RECORD OF USE
B	BDF	EVB		7/30/2019	60% SUBMITTAL

FRASER SEIPLE ARCHITECTS
JOINT VENTURE
BLACK & VEATCH
FILANC

CITY OF MORRO BAY
MORRO BAY WATER
RECLAMATION FACILITY (WRF)

RO/UV BUILDING
ARCHITECTURAL
WALL SECTIONS

DESIGNED: BDF
DETAILED: ANH
CHECKED: -
APPROVED: -
DATE:

0 1/2 1
IF THIS BAR DOES NOT MEASURE 1" THEN DRAWING IS NOT TO FULL SCALE

PROJECT NO.
400530

50-A-301
SHEET
OF

PLOTTED: 7/30/2019 11:53:05 AM
D400530

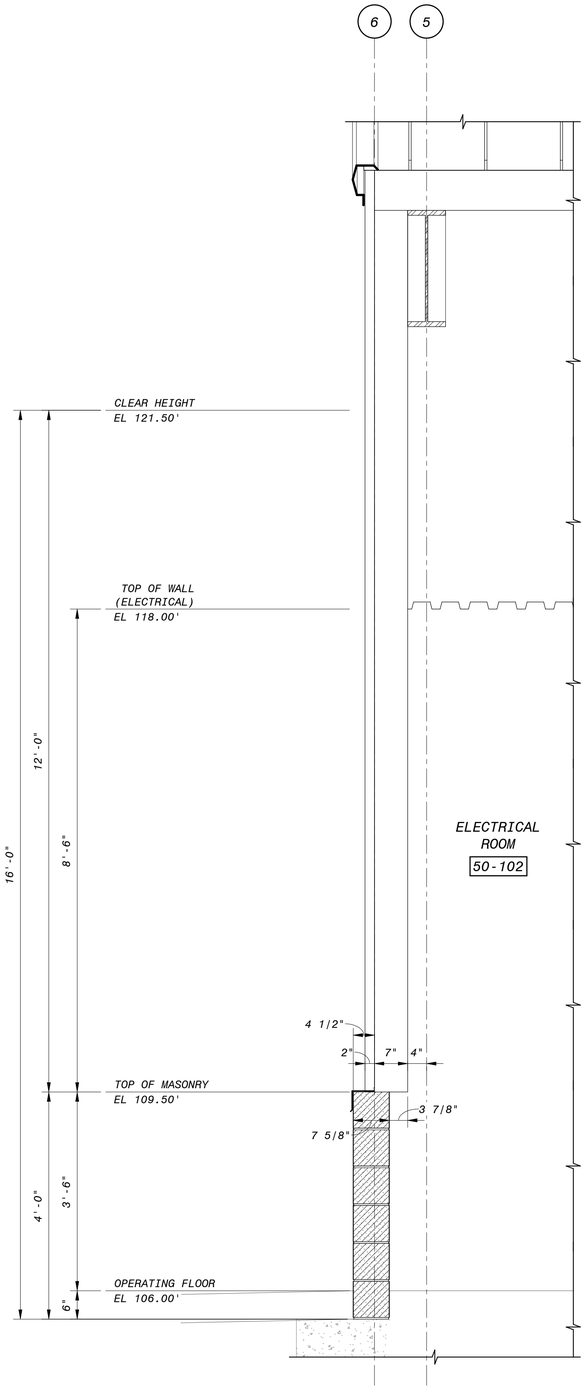

4 SECTION
50-A-102 3/4" = 1'-0"

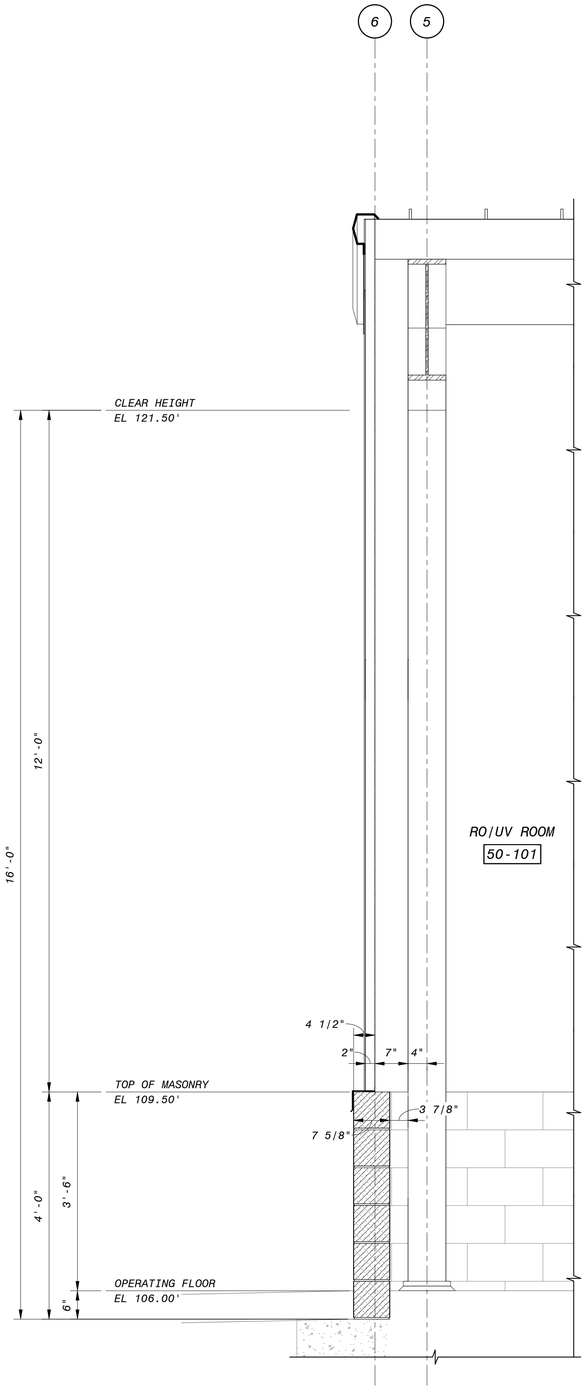

5 SECTION
50-A-102 3/4" = 1'-0"

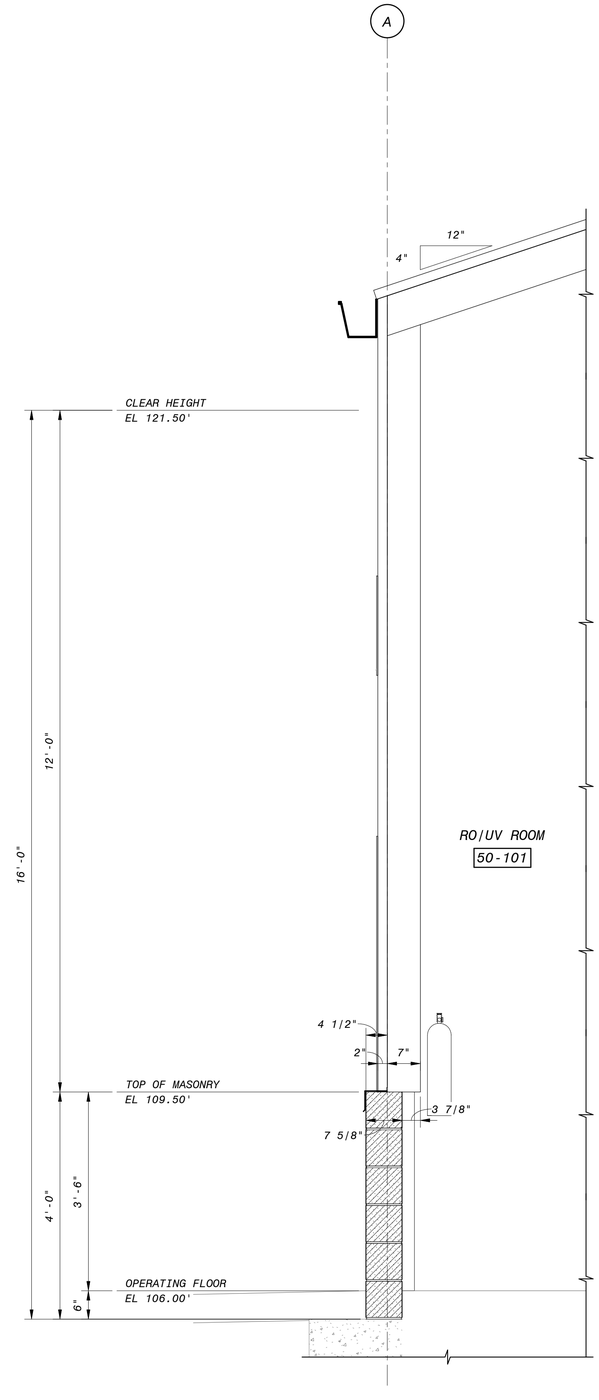

6 SECTION
50-A-102 3/4" = 1'-0"

GENERAL SHEET NOTES

1. FOR VERTICAL REINFORCING AND BOND BEAMS IN MASONRY DESIGN - SEE STRUCTURAL DRAWINGS
2. FOR HORIZONTAL JOINT REINFORCING - SEE SPECIFICATION SECTION 04200

SHEET KEYNOTES

NO.	BY	CHK	APP
B	BDF	BDF	EVB

DATE	REVISIONS AND RECORD OF USE
7/30/2019	60% SUBMITTAL

FRASER SEIPLE ARCHITECTS
JOINT VENTURE
BLACK & VEATCH
FILANC

CITY OF MORRO BAY
MORRO BAY WATER
RECLAMATION FACILITY (WRF)

RO/UV BUILDING
ARCHITECTURAL
WALL SECTIONS

DESIGNED: BDF
DETAILED: ANH
CHECKED: -
APPROVED: -
DATE:

0 1/2 1
IF THIS BAR DOES NOT MEASURE 1" THEN DRAWING IS NOT TO FULL SCALE

PROJECT NO.
400530

50-A-302
SHEET
OF

12" 6" 0' 1' 2' 3'
3/4" = 1'-0"

60% SUBMITTAL - NOT FOR CONSTRUCTION

PLOTTED: 7/30/2019 11:53:05 AM
D400530

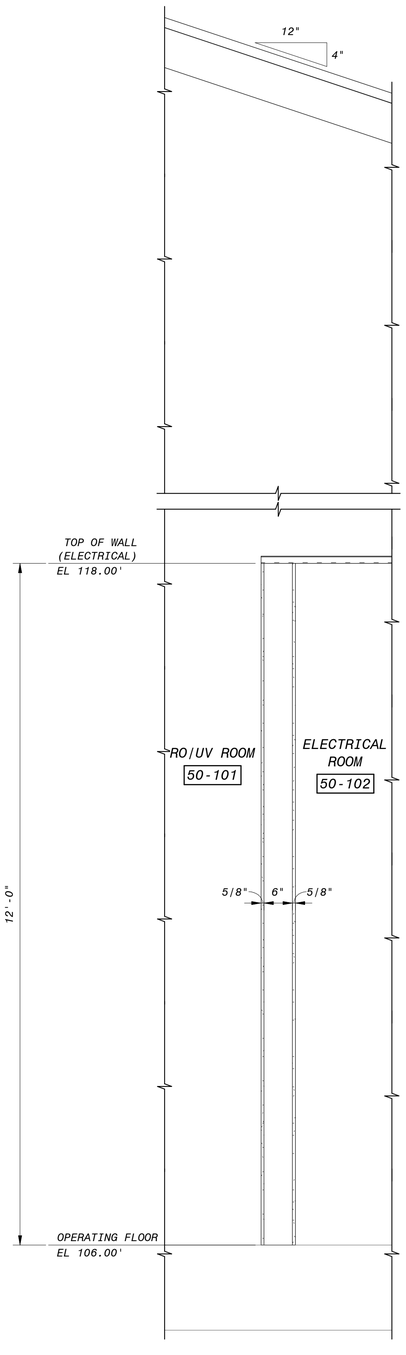

7 SECTION
50-A-102 3/4" = 1'-0"

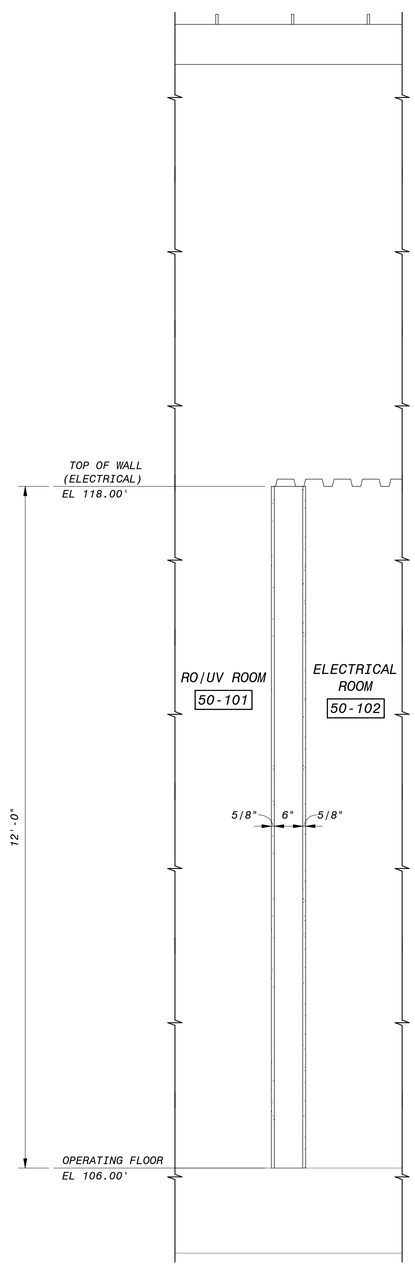

8 SECTION
50-A-102 3/4" = 1'-0"

GENERAL SHEET NOTES

1. FOR VERTICAL REINFORCING AND BOND BEAMS IN MASONRY DESIGN - SEE STRUCTURAL DRAWINGS
2. FOR HORIZONTAL JOINT REINFORCING - SEE SPECIFICATION SECTION 04200

SHEET KEYNOTES

12" 6" 0' 1' 2' 3'
3/4" = 1'-0"

60% SUBMITTAL - NOT FOR CONSTRUCTION

NO.	BY	CHK	APP	DATE	REVISIONS AND RECORD OF USE
B	BDF	EVB		7/30/2019	60% SUBMITTAL

FRASER SEIPLE ARCHITECTS
JOINT VENTURE
BLACK & VEATCH
FILANC

CITY OF MORRO BAY
MORRO BAY WATER
RECLAMATION FACILITY (WRF)

RO/UV BUILDING
ARCHITECTURAL
WALL SECTIONS

DESIGNED: BDF
DETAILED: ANH
CHECKED: -
APPROVED: -
DATE:

0 1/2 1
IF THIS BAR DOES NOT MEASURE 1" THEN DRAWING IS NOT TO FULL SCALE

PROJECT NO.
400530

50-A-303
SHEET
OF

PLOTTED: 7/30/2019 11:55:55 AM
D400530



NORTHWEST PERSPECTIVE



SOUTHEAST PERSPECTIVE

60% SUBMITTAL - NOT FOR CONSTRUCTION

NO.	BY	CHK	APP	DATE	REVISIONS AND RECORD OF USE
B	EVB	BDF	EVB	7/30/2019	60% SUBMITTAL
A	EVB	BDF	EVB	3/5/2019	30% SUBMITTAL

FRASER SEIPLE ARCHITECTS

JOINT VENTURE

BLACK & VEATCH

FILANC

CITY OF MORRO BAY
MORRO BAY WATER
RECLAMATION FACILITY (WRF)

OPERATIONS BUILDING
ARCHITECTURAL
PERSPECTIVES

DESIGNED: BDF
DETAILED: ANH
CHECKED: -
APPROVED: -
DATE:

0 1/2 1

IF THIS BAR DOES NOT MEASURE 1" THEN DRAWING IS NOT TO FULL SCALE

PROJECT NO.
400530

95-A-001
SHEET
OF

PLOTTED: 7/29/2019 8:49:06 PM
D400530

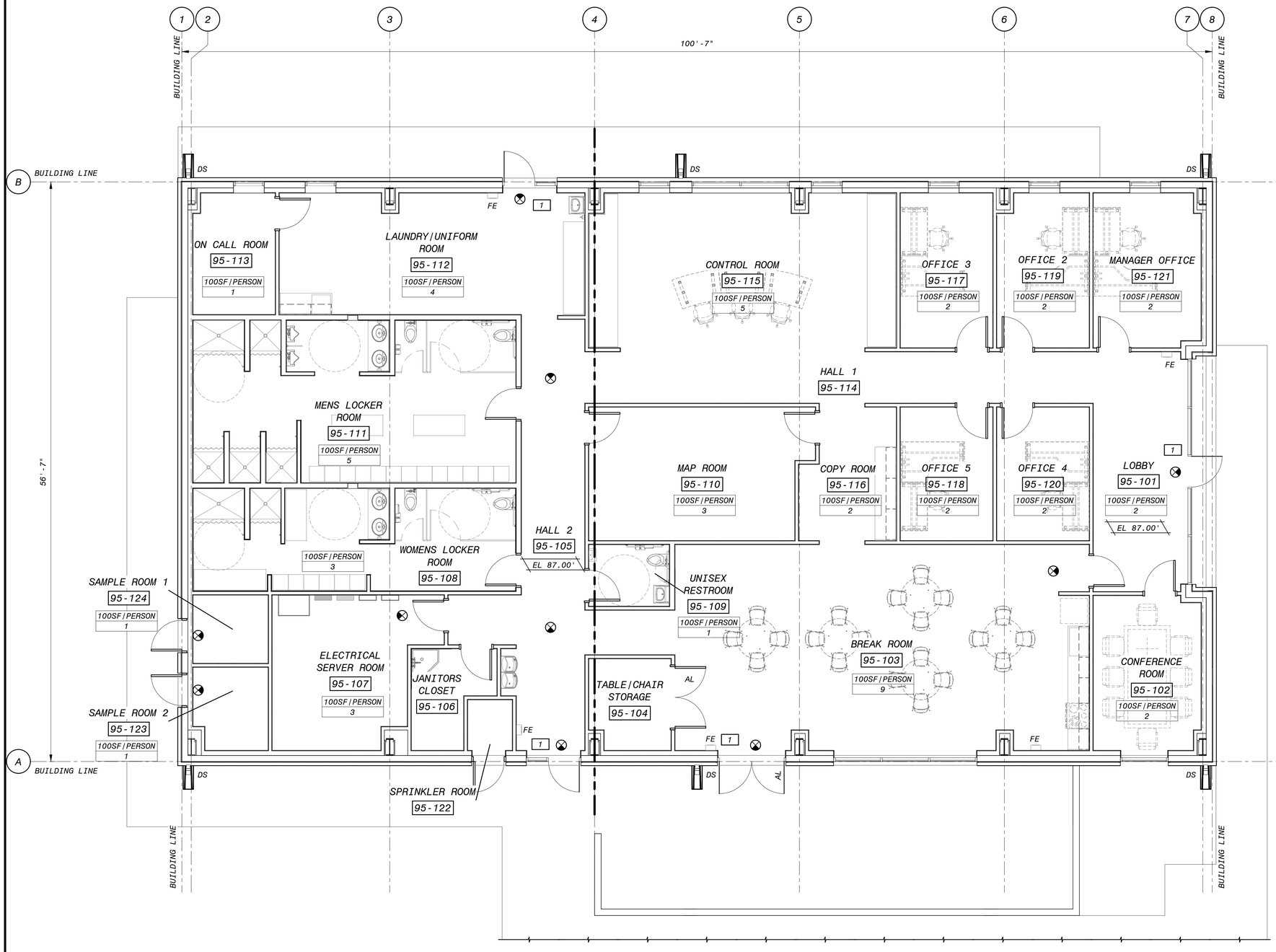

OPERATING FLOOR - LIFE SAFETY PLAN

3/16" = 1'-0"

GENERAL SHEET NOTES

SHEET KEYNOTES

LIFE SAFETY LEGEND

FE	FIRE EXTINGUISHER (FE)
X'-X"	PATH OF EGRESS TRAVEL
100SF/PERSON / 10	OCCUPANTS PER SF OCCUPANT LOAD
1	CUMULATIVE OCCUPANT LOAD AT EXIT
	EXIT SYMBOL
AL	ACTIVE LEAF
DS	DOWNSPOUT

BUILDING CODE ANALYSIS

OPERATIONS BUILDING	
APPLICABLE BUILDING CODES:	
OCCUPANCY	-
ACTUAL FLOOR AREA	0,000 SF TOTAL
ACTUAL HEIGHT	1 STORY (20.33 FT)
TYPE OF CONSTRUCTION	TYPE --
ALLOWABLE HEIGHT	0,000 SF
ALLOWABLE AREA	2 STORIES (55 FT)
DESIGN OCCUPANT LOAD	0 PERSONS
ADA ACCESSIBILITY	-
OCCUPANCY SEPARATION	-
FIRE SPRINKLERS	-

6" 4' 2' 0' 5' 10'

3/16" = 1'-0"

60% SUBMITTAL - NOT FOR CONSTRUCTION

NO.	BY	CHK	APP	DATE	REVISIONS AND RECORD OF USE
B	EVB	BDF	EVB	7/30/2019	60% SUBMITTAL

FRASER SEIPLE ARCHITECTS

JOINT VENTURE

BLACK & VEATCH

FILANC

CITY OF MORRO BAY
MORRO BAY WATER
RECLAMATION FACILITY (WRF)

OPERATIONS BUILDING
ARCHITECTURAL
OPERATING FLOOR - LIFE SAFETY PLAN

DESIGNED: BDF
DETAILED: ANH
CHECKED: -
APPROVED: -
DATE:

0 1/2 1

IF THIS BAR DOES NOT MEASURE 1" THEN DRAWING IS NOT TO FULL SCALE

PROJECT NO.
400530

95-A-101
SHEET
OF

PLOTTED: 7/29/2019 8:49:11 PM
D400530

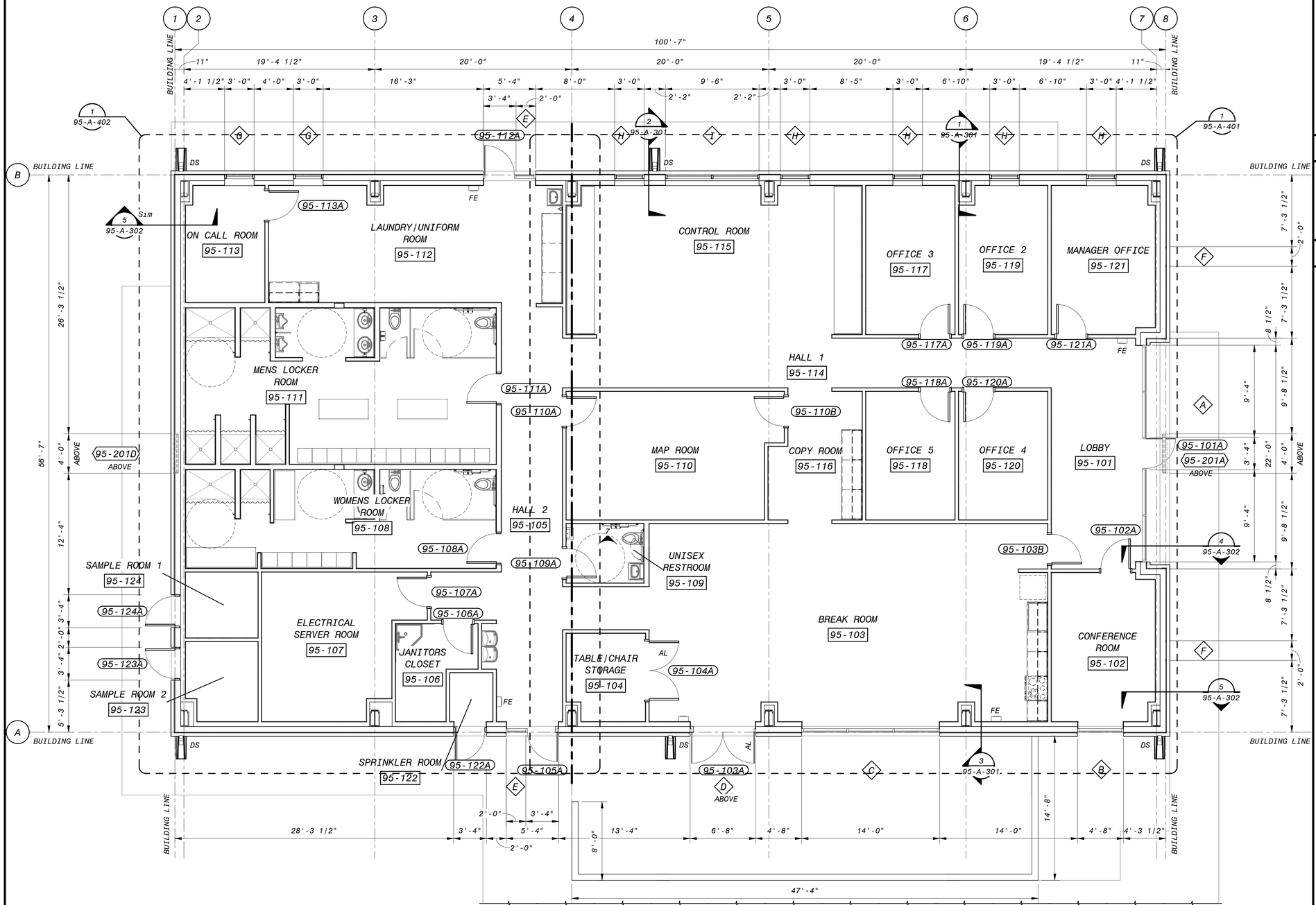

OPERATING FLOOR PLAN - OVERALL

3/16" = 1'-0"

6" 4' 2' 0' 5' 10'

3/16" = 1'-0"

60% SUBMITTAL - NOT FOR CONSTRUCTION

GENERAL SHEET NOTES

SHEET KEYNOTES

NO.	BY	CHK	APP	DATE	REVISIONS AND RECORD OF USE
B	EVB	BDF	EVB	7/30/2019	60% SUBMITTAL
A	EVB	BDF	EVB	3/5/2019	30% SUBMITTAL

FRASER SEIPLE ARCHITECTS

JOINT VENTURE

BLACK & VEATCH

FILANC

CITY OF MORRO BAY
MORRO BAY WATER
RECLAMATION FACILITY (WRF)

OPERATIONS BUILDING
ARCHITECTURAL
OPERATING FLOOR PLAN

DESIGNED: BDF
DETAILED: ANH
CHECKED: -
APPROVED: -
DATE:

0 1/2 1

IF THIS BAR DOES NOT MEASURE 1" THEN DRAWING IS NOT TO FULL SCALE

PROJECT NO.
400530

95-A-102
SHEET
OF

PLOTTED: 7/29/2019 8:49:15 PM
D400530

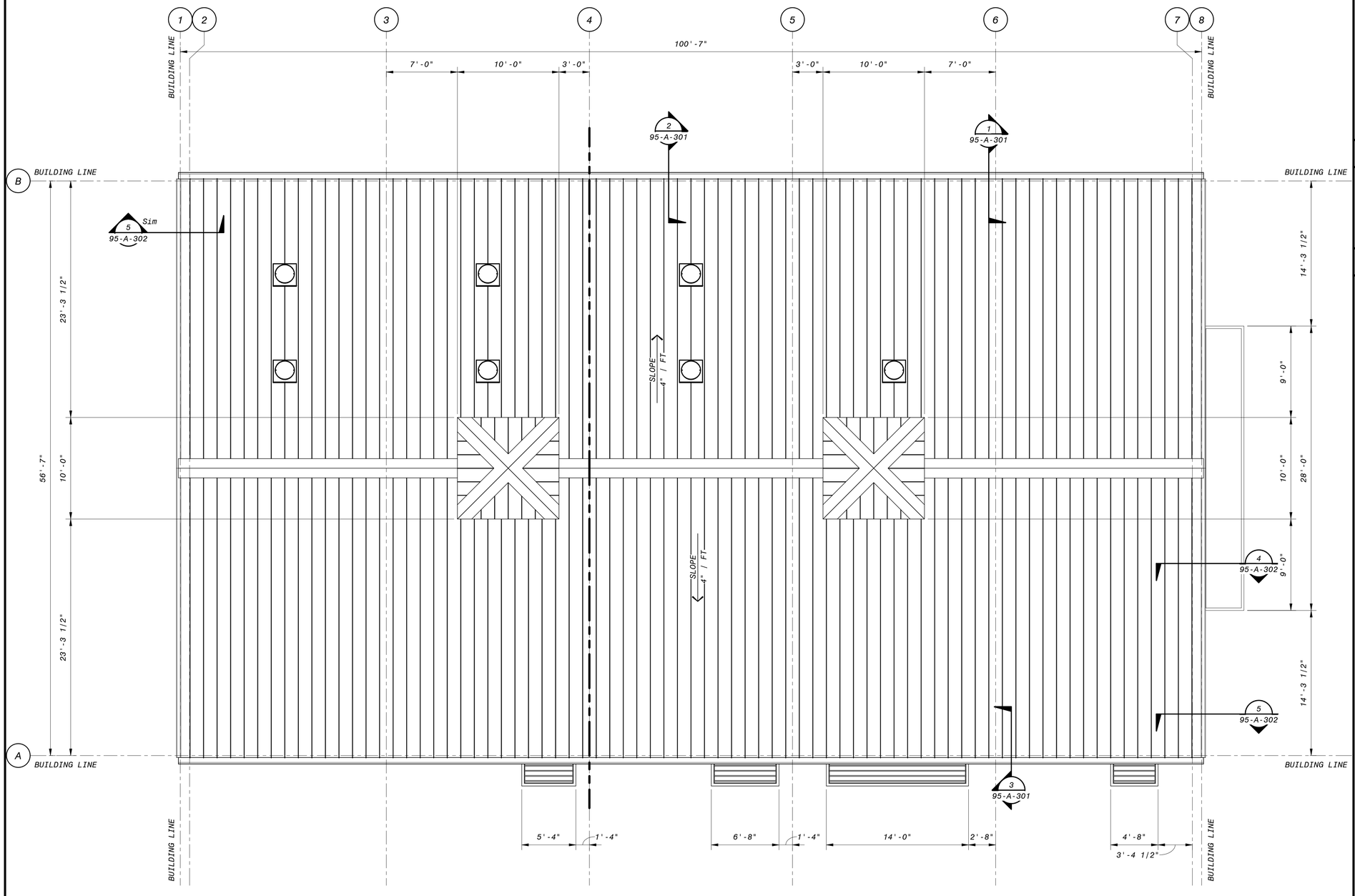

ROOF PLAN
3/16" = 1'-0"

6" 4' 2' 0' 5' 10'
3/16" = 1'-0"

60% SUBMITTAL - NOT FOR CONSTRUCTION

GENERAL SHEET NOTES

SHEET KEYNOTES

NO.	BY	CHK	APP
B	EVB	BDF	EVB

REVISIONS AND RECORD OF USE

60% SUBMITTAL

DATE 7/30/2019

FRASER SEIPLE ARCHITECTS

JOINT VENTURE

BLACK & VEATCH

FILANC

CITY OF MORRO BAY
MORRO BAY WATER
RECLAMATION FACILITY (WRF)

OPERATIONS BUILDING
ARCHITECTURAL
ROOF PLAN

DESIGNED: BDF
DETAILED: ANH
CHECKED: -
APPROVED: -
DATE:

0 1/2 1
IF THIS BAR DOES NOT MEASURE 1" THEN DRAWING IS NOT TO FULL SCALE

PROJECT NO.
400530

95-A-103
SHEET
OF

PLOTTED: 7/29/2019 8:49:16 PM
D400530

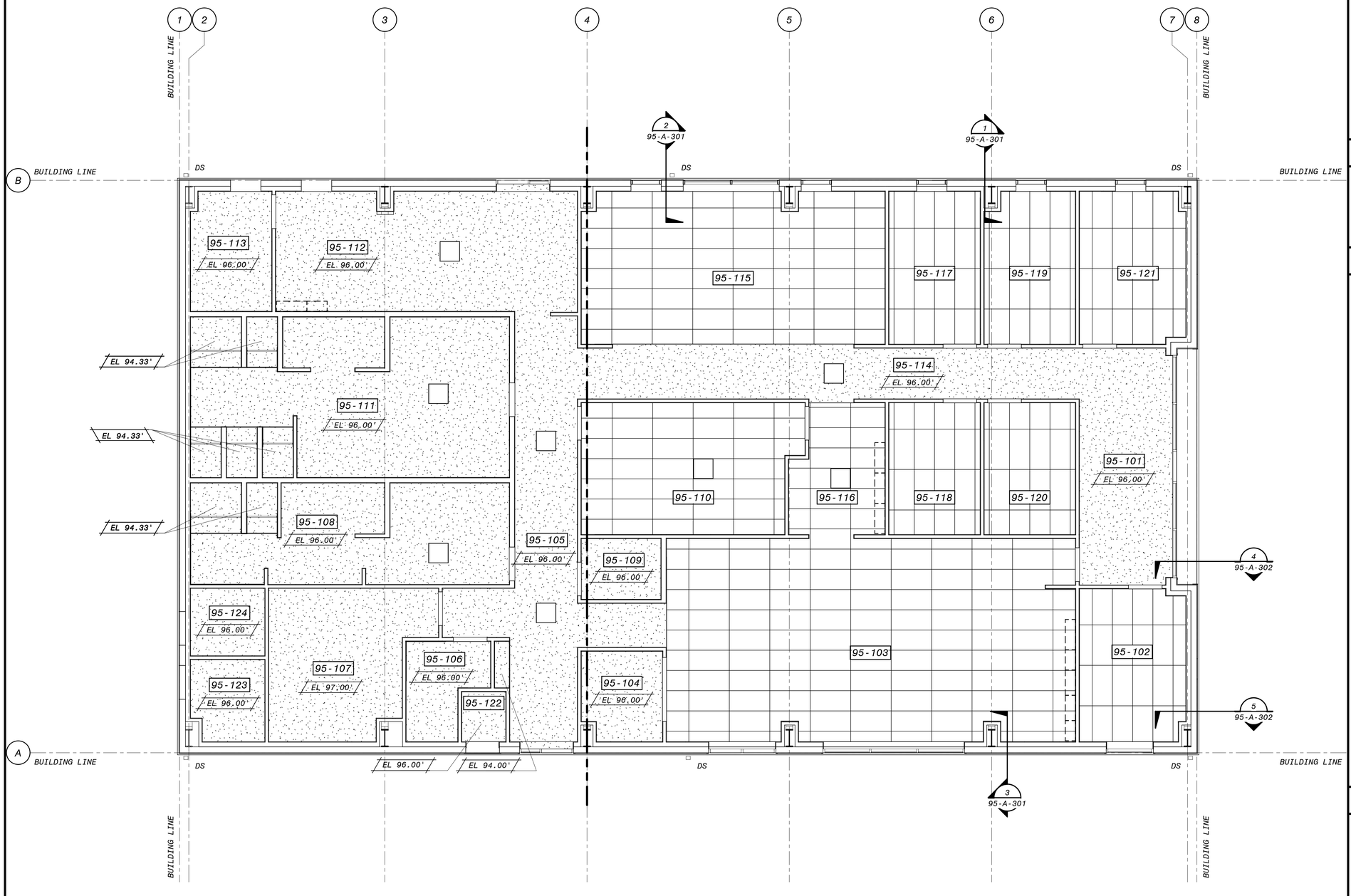

REFLECTED CEILING PLAN

3/16" = 1'-0"

GENERAL SHEET NOTES

SHEET KEYNOTES

CEILING PLAN LEGEND

LIGHT FIXTURES

EXHAUST DIFFUSER OR RETURN DIFFUSER

SUPPLY DIFFUSER

6" 4' 2' 0' 5' 10'

3/16" = 1'-0"

60% SUBMITTAL - NOT FOR CONSTRUCTION

NO.	BY	CHK	APP
B	EVB	BDF	EVB

60% SUBMITTAL

REVISIONS AND RECORD OF USE

DATE 7/30/2019

FRASER SEIPLE ARCHITECTS

BLACK & VEATCH

JOINT VENTURE

FILANC

CITY OF MORRO BAY
MORRO BAY WATER
RECLAMATION FACILITY (WRF)

OPERATIONS BUILDING
ARCHITECTURAL
REFLECTED CEILING PLAN

DESIGNED: BDF
DETAILED: ANH
CHECKED: -
APPROVED: -
DATE:

0 1/2 1

IF THIS BAR DOES NOT MEASURE 1" THEN DRAWING IS NOT TO FULL SCALE

PROJECT NO.
400530

95-A-104
SHEET
OF

PLOTTED: 7/29/2019 8:49:18 PM
D400530

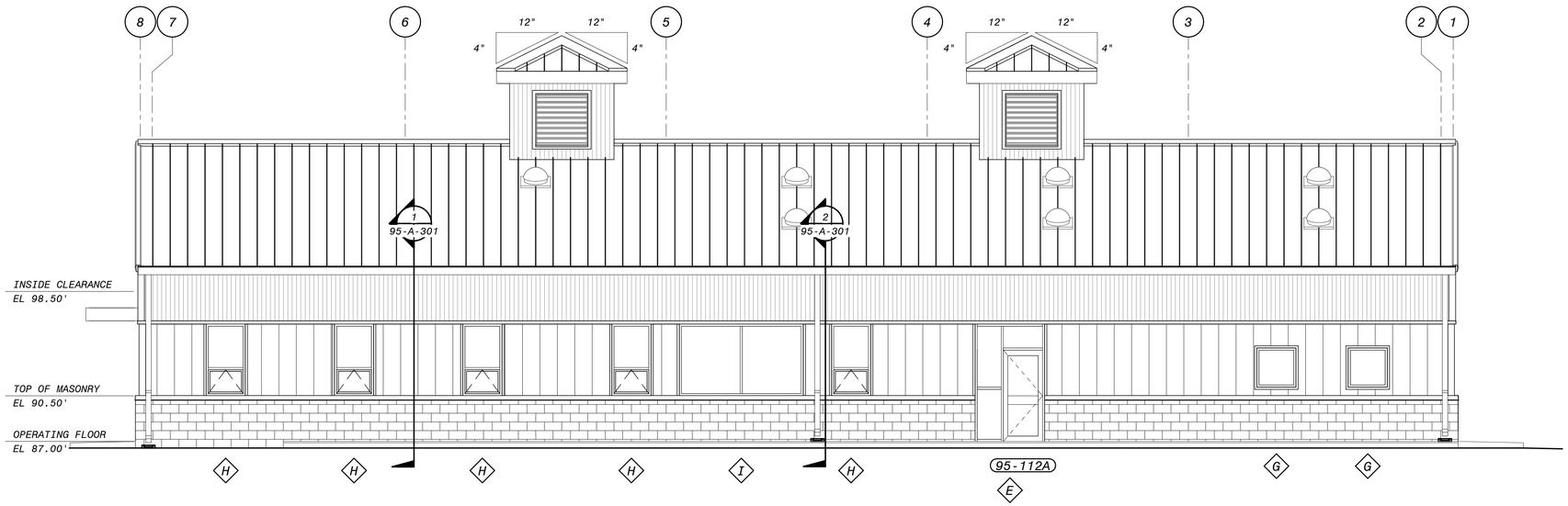

NORTH ELEVATION

3/16" = 1'-0"

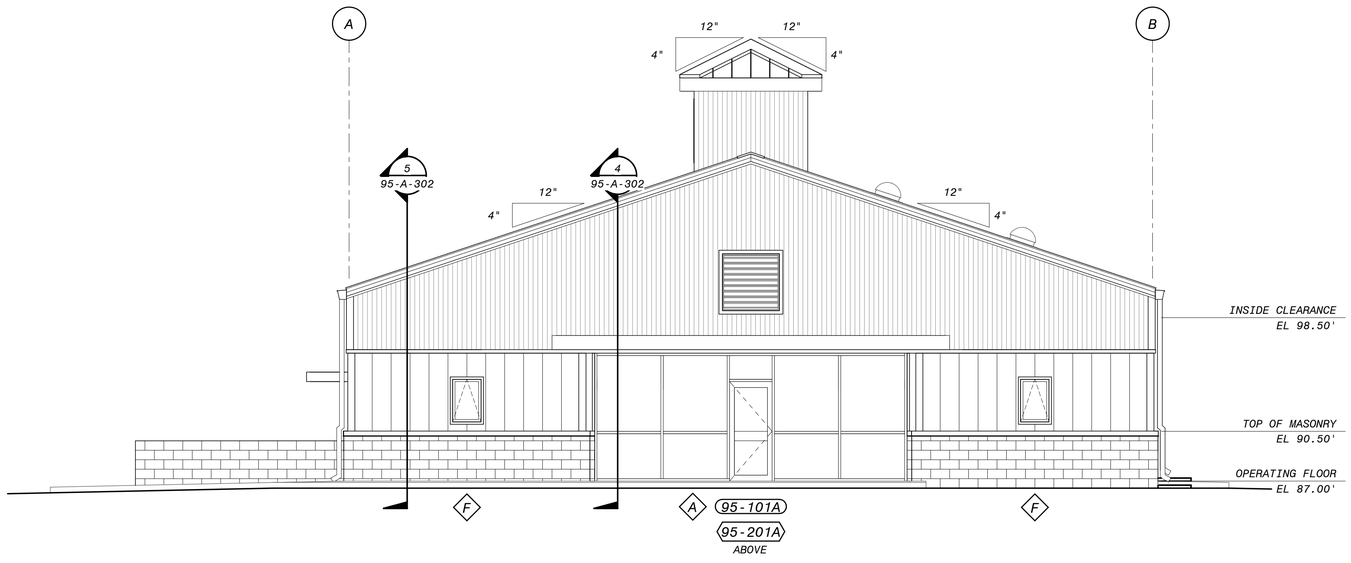

EAST ELEVATION

3/16" = 1'-0"

GENERAL SHEET NOTES

SHEET KEYNOTES

6" 4' 2' 0' 5' 10'

3/16" = 1'-0"

60% SUBMITTAL - NOT FOR CONSTRUCTION

NO.	BY	CHK	APP
B	EVB	BDF	EVB

DATE	REVISIONS AND RECORD OF USE
7/30/2019	60% SUBMITTAL

FRASER SEIPLE ARCHITECTS

JOINT VENTURE

BLACK & VEATCH

FILANC

CITY OF MORRO BAY
MORRO BAY WATER
RECLAMATION FACILITY (WRF)

OPERATIONS BUILDING
ARCHITECTURAL
BUILDING ELEVATIONS

DESIGNED: BDF
DETAILED: ANH
CHECKED: -
APPROVED: -
DATE:

0 1/2 1

IF THIS BAR DOES NOT MEASURE 1" THEN DRAWING IS NOT TO FULL SCALE

PROJECT NO.
400530

95-A-201
SHEET
OF

PLOTTED: 7/29/2019 8:49:19 PM

D400530

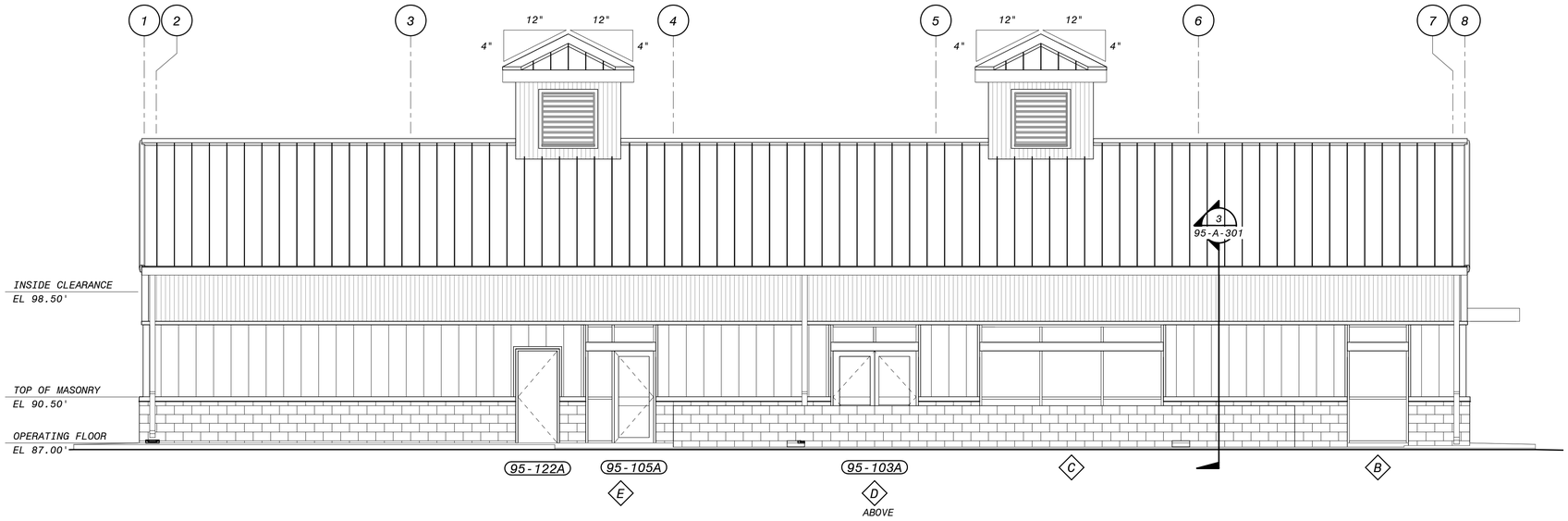

SOUTH ELEVATION

3/16" = 1'-0"

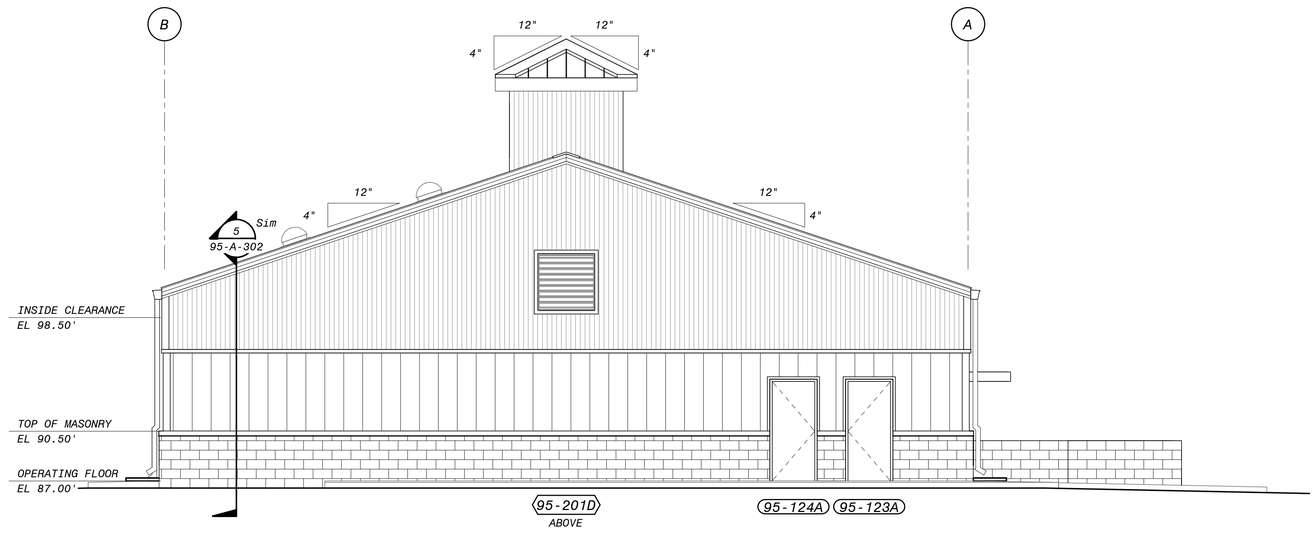

WEST ELEVATION

3/16" = 1'-0"

GENERAL SHEET NOTES

SHEET KEYNOTES

NO.	BY	CHK	APP
B	EVB	BDF	EVB

60% SUBMITTAL — REVISIONS AND RECORD OF USE

7/30/2019 — DATE

FRASER SEIPLE ARCHITECTS

JOINT VENTURE

BLACK & VEATCH

FILANC

CITY OF MORRO BAY
MORRO BAY WATER
RECLAMATION FACILITY (WRF)

OPERATIONS BUILDING
ARCHITECTURAL
BUILDING ELEVATIONS

DESIGNED: BDF
DETAILED: ANH
CHECKED: -
APPROVED: -
DATE:

0 1/2 1

IF THIS BAR DOES NOT MEASURE 1" THEN DRAWING IS NOT TO FULL SCALE

PROJECT NO.
400530

95-A-202
SHEET
OF

6" 4' 2' 0' 5' 10'

3/16" = 1'-0"

60% SUBMITTAL - NOT FOR CONSTRUCTION

PLOTTED: 7/29/2019 8:49:21 PM
D400530

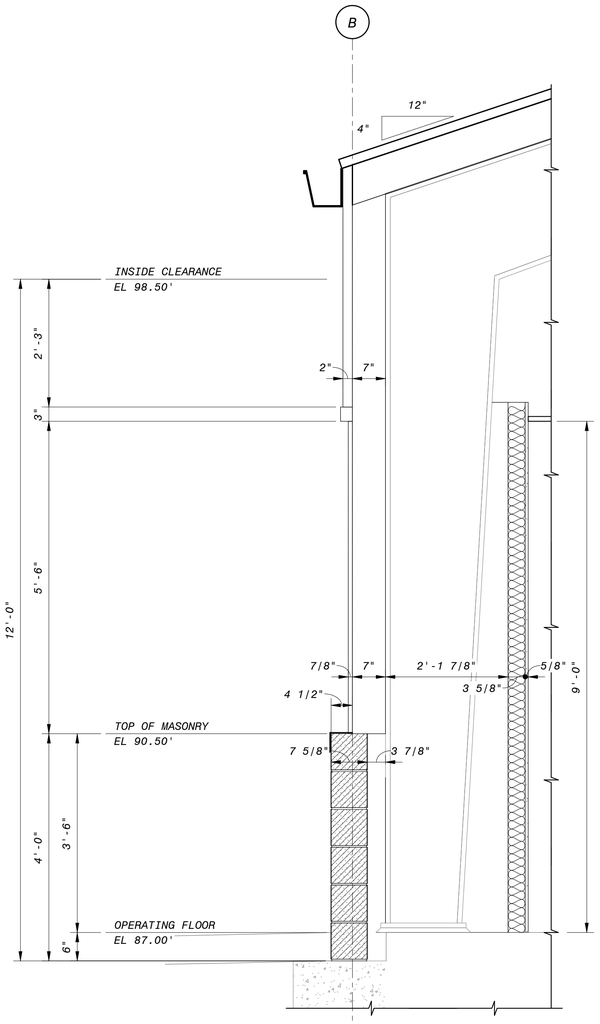

1 SECTION
95-A-102 3/4" = 1'-0"

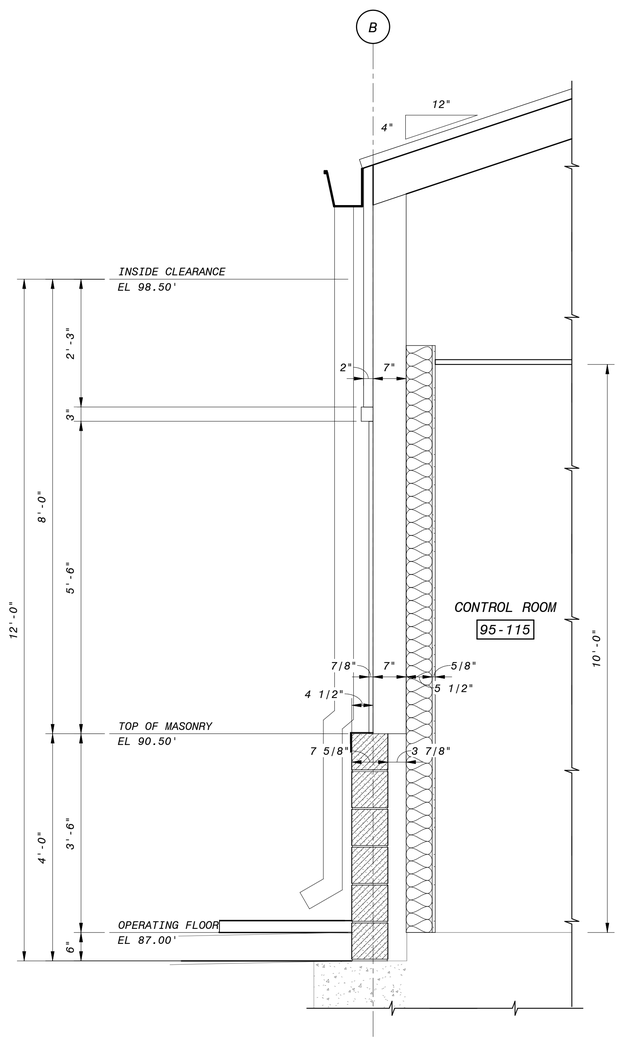

2 SECTION
95-A-102 3/4" = 1'-0"

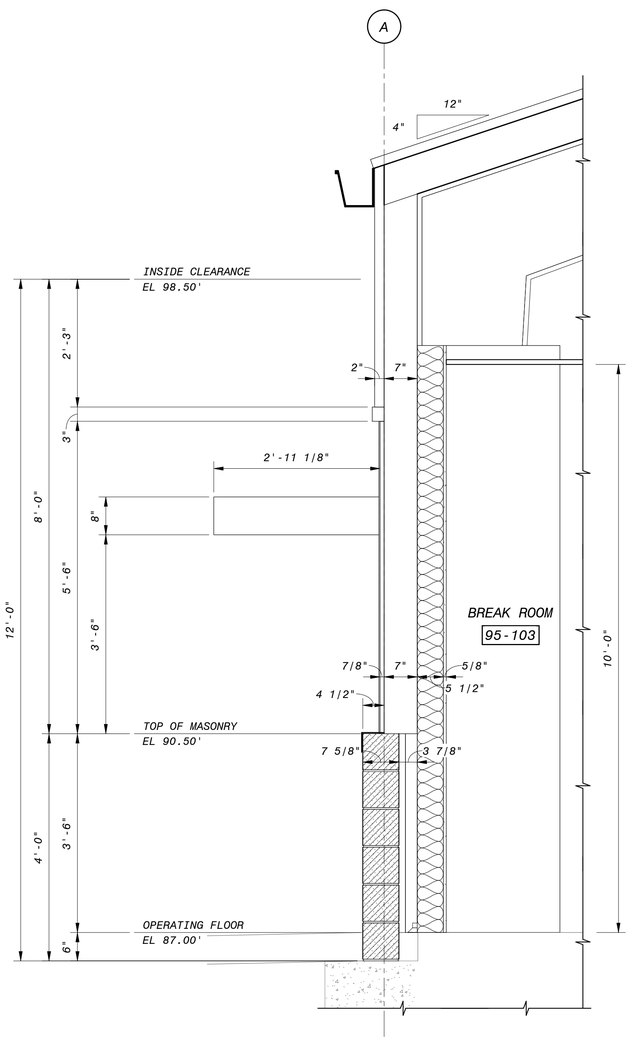

3 SECTION
95-A-102 3/4" = 1'-0"

GENERAL SHEET NOTES

1. FOR VERTICAL REINFORCING AND BOND BEAMS IN MASONRY DESIGN - SEE STRUCTURAL DRAWINGS
2. FOR HORIZONTAL JOINT REINFORCING - SEE SPECIFICATION SECTION 04200

SHEET KEYNOTES

NO.	BY	CHK	APP	DATE	REVISIONS AND RECORD OF USE
B	EVB	BDF	EVB	7/30/2019	60% SUBMITTAL

FRASER SEIPLE ARCHITECTS
BLACK & VEATCH
JOINT VENTURE
FILANC

CITY OF MORRO BAY
MORRO BAY WATER
RECLAMATION FACILITY (WRF)

OPERATIONS BUILDING
ARCHITECTURAL
WALL SECTIONS

DESIGNED: BDF
DETAILED: ANH
CHECKED: -
APPROVED: -
DATE:

0 1/2 1
IF THIS BAR DOES NOT MEASURE 1" THEN DRAWING IS NOT TO FULL SCALE

PROJECT NO.
400530

95-A-301
SHEET
OF

12" 6" 0' 1' 2' 3'
3/4" = 1'-0"

60% SUBMITTAL - NOT FOR CONSTRUCTION

PLOTTED: 7/29/2019 8:49:23 PM
D400530

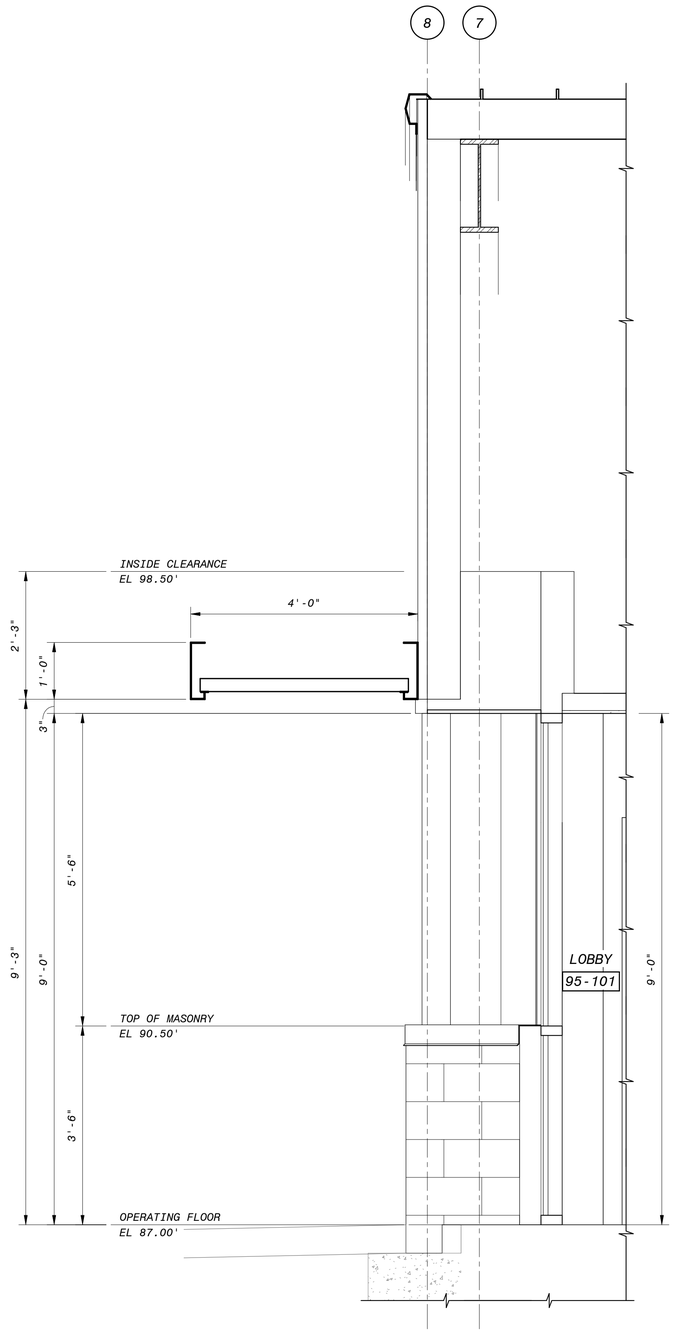

4 SECTION
95-A-102 3/4" = 1'-0"

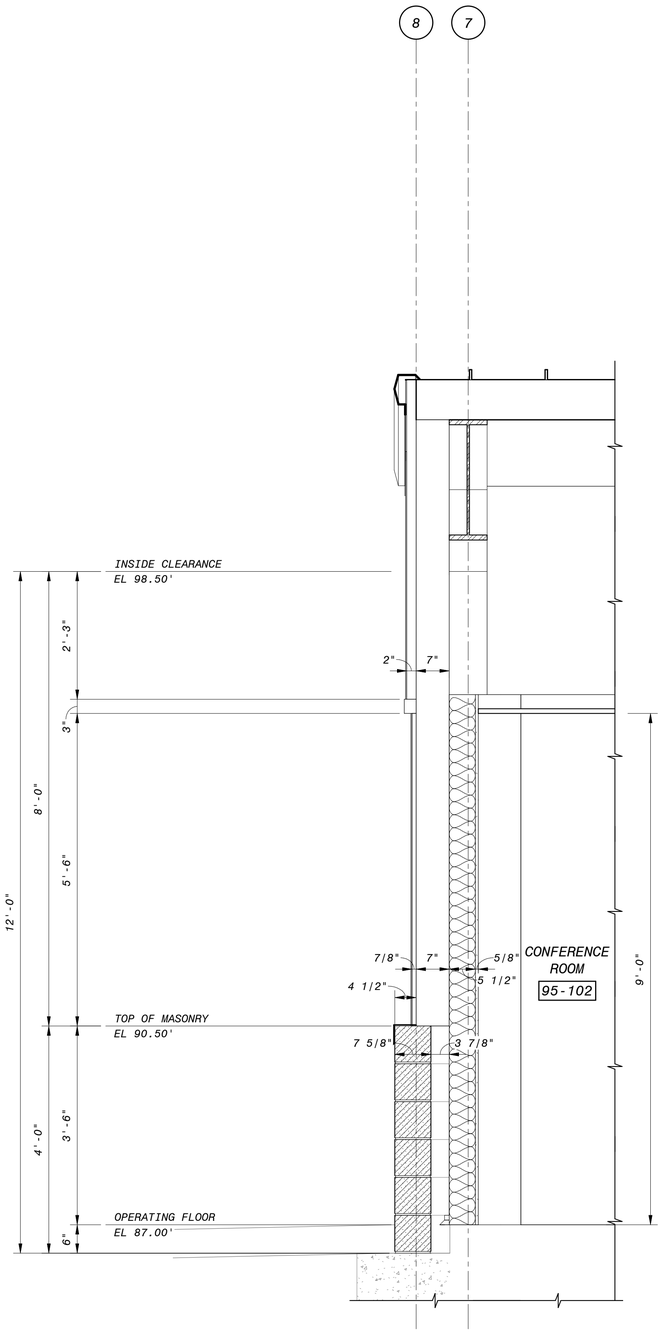

5 SECTION
95-A-102 3/4" = 1'-0"

GENERAL SHEET NOTES

1. FOR VERTICAL REINFORCING AND BOND BEAMS IN MASONRY DESIGN - SEE STRUCTURAL DRAWINGS
2. FOR HORIZONTAL JOINT REINFORCING - SEE SPECIFICATION SECTION 04200

SHEET KEYNOTES

12" 6" 0' 1' 2' 3'
3/4" = 1'-0"

60% SUBMITTAL - NOT FOR CONSTRUCTION

NO.	BY	CHK	APP
B	EVB	BDF	EVB

60% SUBMITTAL
REVISIONS AND RECORD OF USE
DATE: 7/30/2019

FRASER SEIPLE ARCHITECTS
JOINT VENTURE
BLACK & VEATCH
FILANC

CITY OF MORRO BAY
MORRO BAY WATER
RECLAMATION FACILITY (WRF)

OPERATIONS BUILDING
ARCHITECTURAL
WALL SECTIONS

DESIGNED: BDF
DETAILED: ANH
CHECKED: -
APPROVED: -
DATE:

0 1/2 1
IF THIS BAR DOES NOT MEASURE 1" THEN DRAWING IS NOT TO FULL SCALE

PROJECT NO.
400530

95-A-302
SHEET
OF

PLOTTED: 7/29/2019 8:49:24 PM
D400530

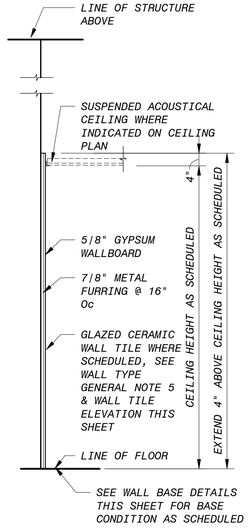

A WALL TYPE

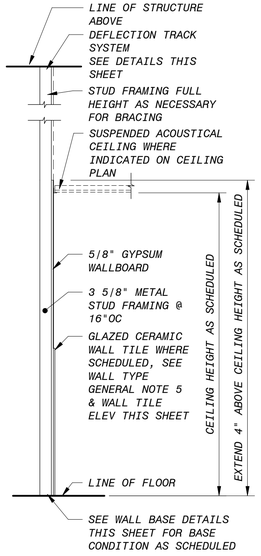

B WALL TYPE

B1 EXTEND FULL HEIGHT TO UNDERSIDE OF STRUCTURE

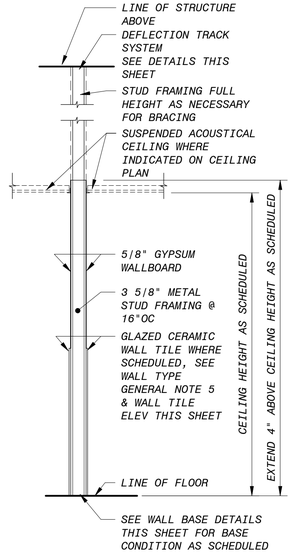

C WALL TYPE

C1 EXTEND STUD FRAMING & GWB BOTH SIDES FULL HEIGHT TO UNDERSIDE OF STRUCTURE

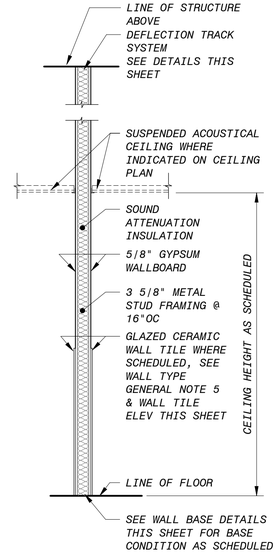

D WALL TYPE

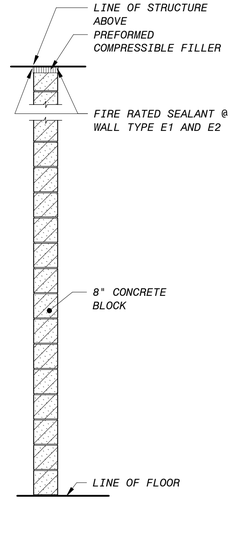

E WALL TYPE

E1 1 HOUR FIRE RATED CONSTRUCTION

E2 2 HOUR FIRE RATED CONSTRUCTION

1 WALL TYPES
1/2" = 1'-0"

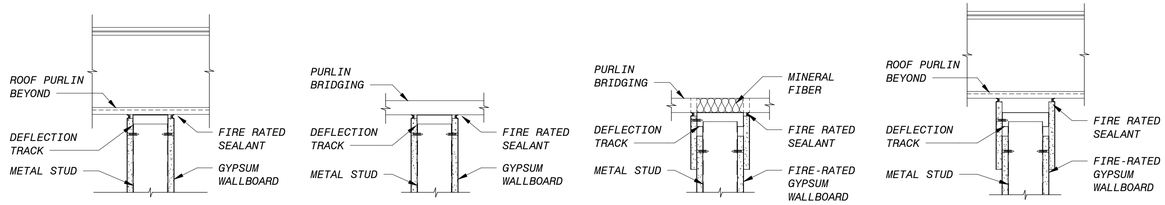

2 DEFLECTION TRACK SYSTEM
1 1/2" = 1'-0"

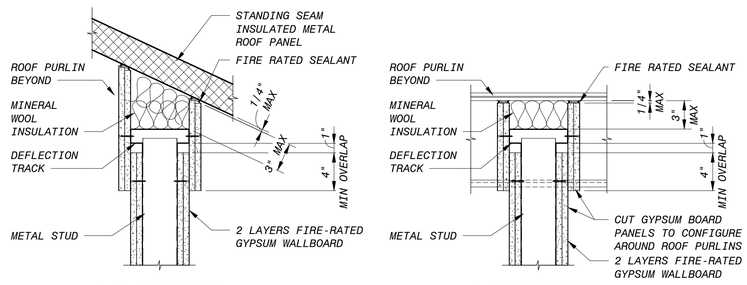

3 DEFLECTION TRACK SYSTEM
1 1/2" = 1'-0"

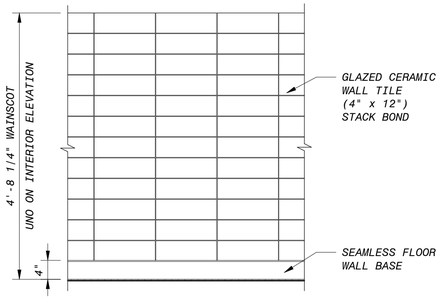

4 WALL TILE ELEVATION
3/4" = 1'-0"

GENERAL SHEET NOTES

WALL TYPES NOTES

1. SEE ROOM FINISH SCHEDULE FOR WALL FINISHES AND CEILING HEIGHTS.
2. SEE FLOOR PLANS FOR FIRE RATED WALL LOCATIONS AND HOURLY RATED REQUIREMENTS.
3. PROVIDE ACOUSTICAL SEALANT AT WALL TYPES INDICATED TO RECEIVE SOUND ATTENUATION INSULATION.
4. PROVIDE FIRE STOPPING AND FIRE RATED SEALANT AS REQUIRED FOR ASSEMBLY INDICATED AT FIRE RATED WALLS.
5. PROVIDE CEMENT BACKER BOARD WHERE INDICATED IN LIEU OF GYPSUM WALLBOARD WHERE WALL IS SCHEDULED TO RECEIVE CERAMIC TILE FINISH, UNLESS NOTED OTHERWISE FOR SPECIFIC WALL TYPE.
6. SEE STRUCTURAL DRAWINGS FOR TOP AND BOTTOM OF WALL CONDITIONS.
7. SEE SPECIFICATION SECTION 04200 FOR JOINT REINFORCING.
8. SEE STRUCTURAL DRAWINGS FOR TOP AND BOTTOM OF WALL CONDITION AT CMU WALLS.

NO.	BY	CHK	APP
B	EVB	BDF	EVB

60% SUBMITTAL — REVISIONS AND RECORD OF USE
7/30/2019 — DATE

FRASER SEIPLE ARCHITECTS
JOINT VENTURE
BLACK & VEATCH
FILANC

CITY OF MORRO BAY
MORRO BAY WATER
RECLAMATION FACILITY (WRF)

OPERATIONS BUILDING
ARCHITECTURAL
WALL TYPES AND CONNECTION DETAILS

DESIGNED: BDF
DETAILED: ANH
CHECKED: -
APPROVED: -
DATE:

12" 9" 6" 3" 0' 1'
1 1/2" = 1'-0"
12" 6" 0' 1' 2' 3'
3/4" = 1'-0"
12' 6' 0' 1' 2' 3' 4' 5'
1/2" = 1'-0"

0 1/2 1
IF THIS BAR DOES NOT MEASURE 1" THEN DRAWING IS NOT TO FULL SCALE

PROJECT NO.
400530

95-A-303
SHEET
OF

60% SUBMITTAL - NOT FOR CONSTRUCTION

PLOTTED: 7/29/2019 8:49:25 PM
D400530

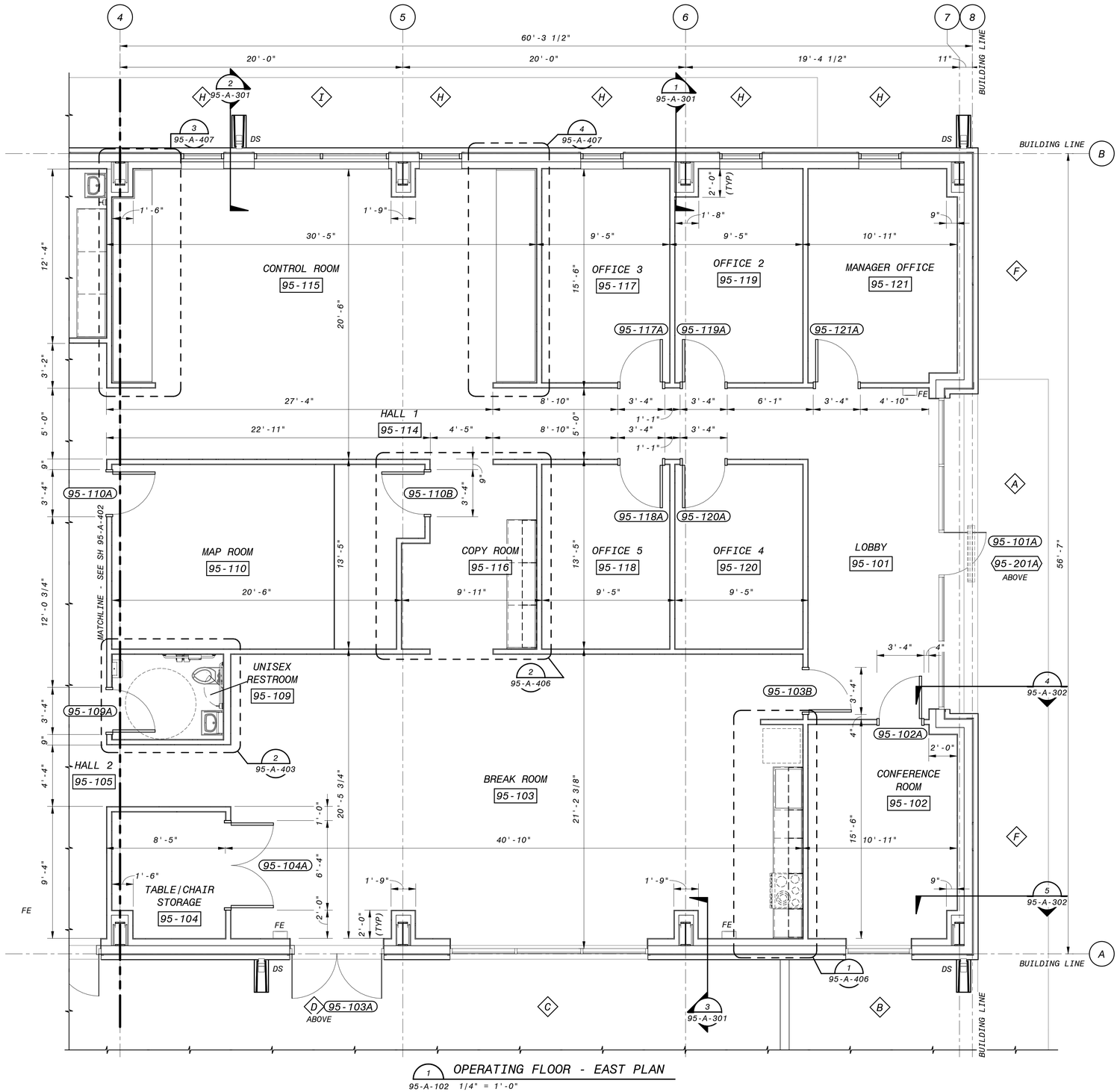

1 OPERATING FLOOR - EAST PLAN
95-A-102 1/4" = 1'-0"

4' 2' 0' 4' 8'
1/4" = 1'-0"

60% SUBMITTAL - NOT FOR CONSTRUCTION

GENERAL SHEET NOTES

SHEET KEYNOTES

NO.	BY	CHK	APP
B	EVB	BDF	EVB

60% SUBMITTAL
REVISIONS AND RECORD OF USE
7/30/2019
DATE

FRASER SEIPLE ARCHITECTS
JOINT VENTURE
BLACK & VEATCH
FILANC

CITY OF MORRO BAY
MORRO BAY WATER
RECLAMATION FACILITY (WRF)

OPERATIONS BUILDING
ARCHITECTURAL
ENLARGED OPERATING FLOOR PLAN - EAST

DESIGNED: BDF
DETAILED: ANH
CHECKED: -
APPROVED: -
DATE:

0 1/2 1
IF THIS BAR DOES NOT MEASURE 1" THEN DRAWING IS NOT TO FULL SCALE

PROJECT NO.
400530

95-A-401
SHEET
OF

PLOTTED: 7/29/2019 8:49:27 PM
D400530

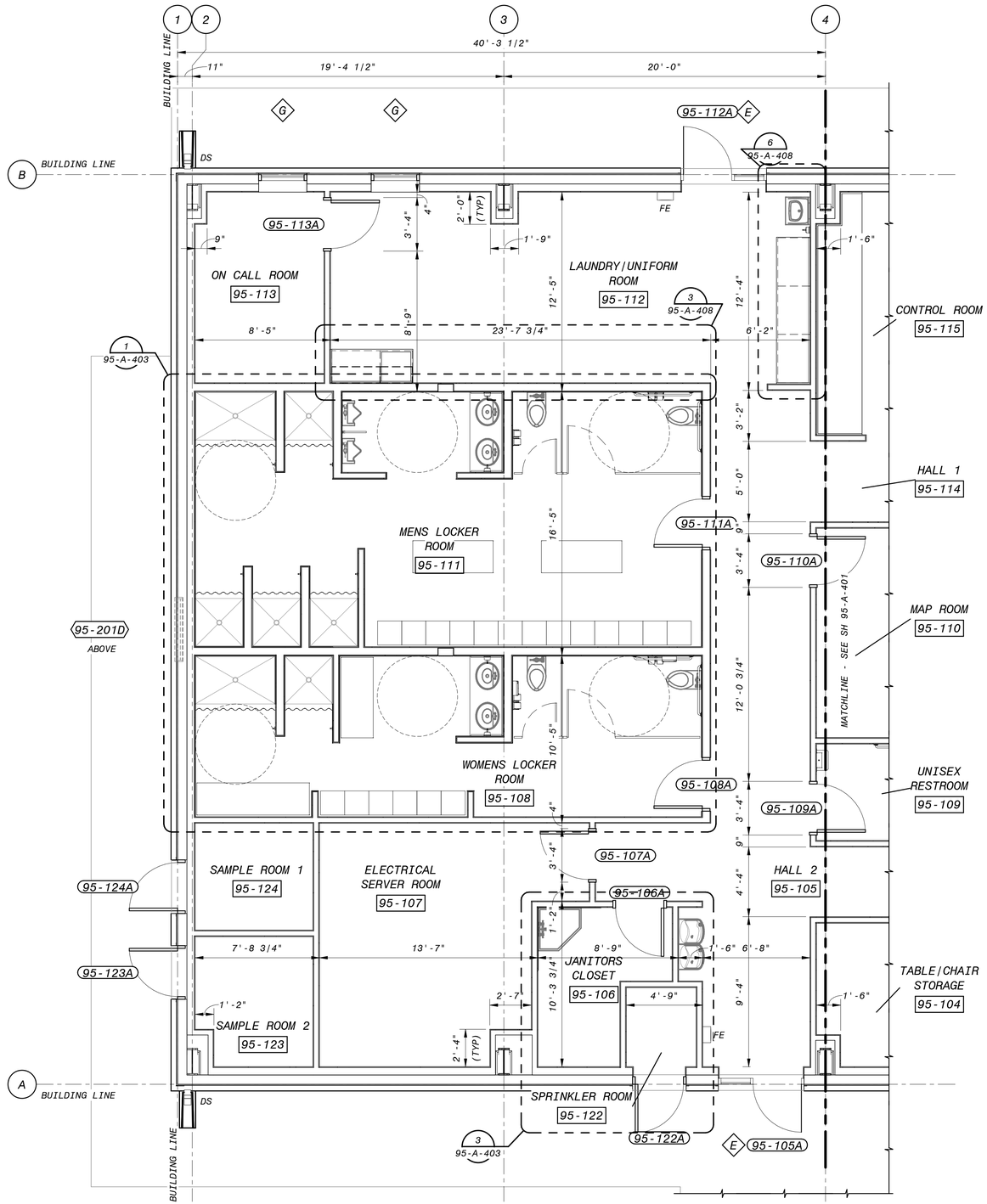

1 OPERATING FLOOR - WEST PLAN
95-A-102 1/4" = 1'-0"

4' 2' 0' 4' 8'
1/4" = 1'-0"

60% SUBMITTAL - NOT FOR CONSTRUCTION

GENERAL SHEET NOTES

SHEET KEYNOTES

NO.	BY	CHK	APP
B	EVB	BDF	EVB

60% SUBMITTAL
REVISIONS AND RECORD OF USE
DATE: 7/30/2019

FRASER SEIPLE ARCHITECTS
JOINT VENTURE
BLACK & VEATCH
FILANC

CITY OF MORRO BAY
MORRO BAY WATER RECLAMATION FACILITY (WRF)

OPERATIONS BUILDING
ARCHITECTURAL
ENLARGED OPERATING FLOOR PLAN - WEST

DESIGNED: BDF
DETAILED: ANH
CHECKED: -
APPROVED: -
DATE:

0 1/2 1
IF THIS BAR DOES NOT MEASURE 1" THEN DRAWING IS NOT TO FULL SCALE

PROJECT NO. 400530

95-A-402
SHEET OF

PLOTTED: 7/29/2019 8:49:29 PM
D400530

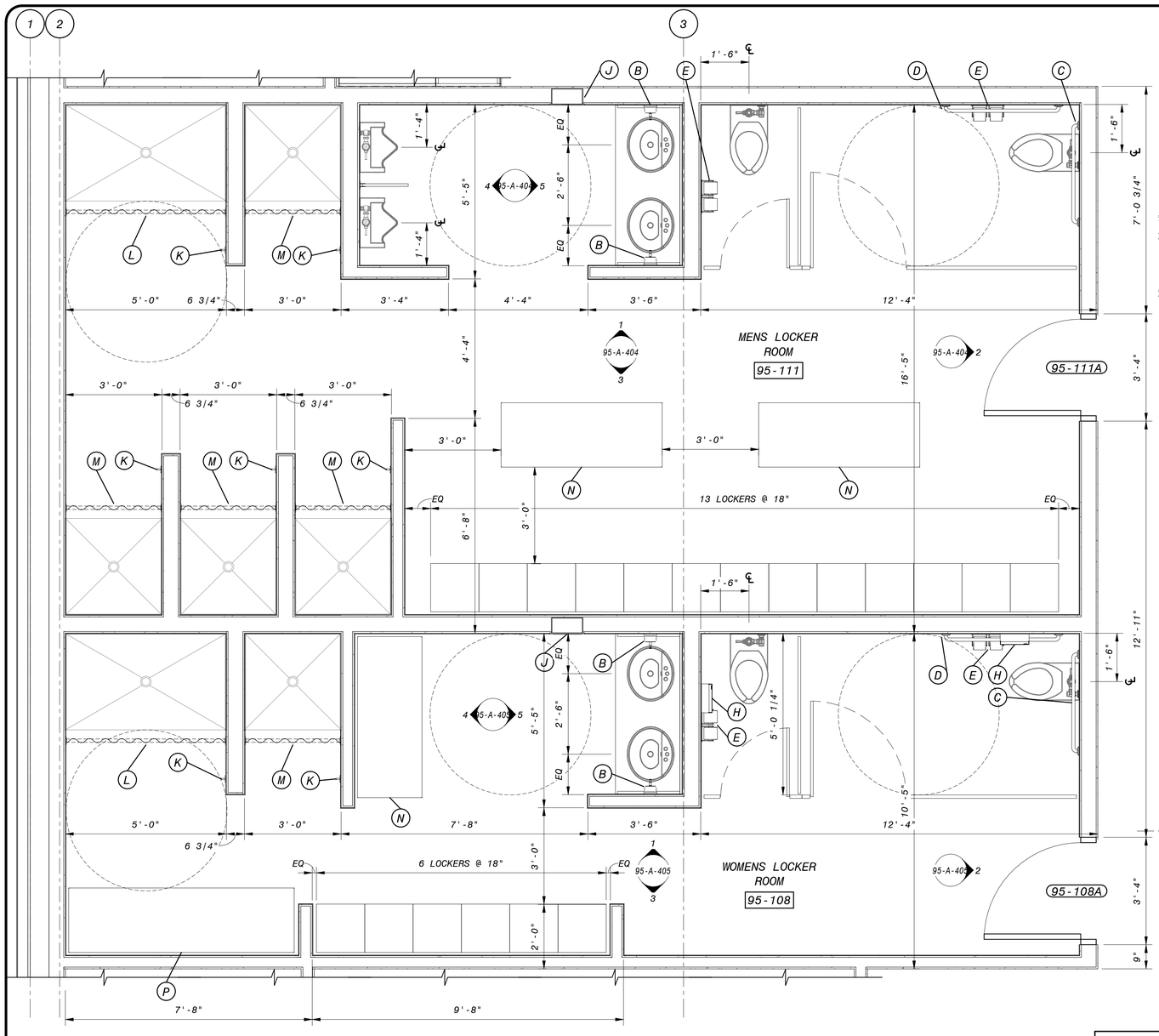

1 ENLARGED RESTROOM AND LOCKER ROOM PLAN
95-A-402 1/2" = 1'-0"

2 ENLARGED UNISEX RESTROOM PLAN
95-A-401 1/2" = 1'-0"

3 ENLARGED JANITORES CLOSET PLAN
95-A-402 1/2" = 1'-0"

ACCESSORY SCHEDULE

QTY	TYPE	DESCRIPTION	MOUNTING HEIGHT
1	A	FIXED TILT MIRROR, WITH SHELF, XX by XX inches	
6	B	SOAP DISPENSER	
3	C	36" GRAB BAR	
3	D	42" GRAB BAR	
5	E	TOILET TISSUE DISPENSER	
1	F	TOWEL DISPENSER	
1	G	WASTE RECEPTACLE, 18 GALLON, RECESSED	
3	H	NAPKIN DISPOSAL, 1.5 GALLONS, SURFACE-MOUNTED	
2	J	RECESSED TOWEL DISPENSER/WASTE RECEPTACLE	
7	K	SINGLE ROBE HOOK - PROJECTS 1-3/4"	
2	L	SHOWER CURTAIN ROD | EXPOSED MOUNTING | 1 1/4" OD | 60" L	
5	M	SHOWER CURTAIN ROD | EXPOSED MOUNTING | 1 1/4" OD | 36" L	
3	N	SOLID PLASTIC PEDESTAL BENCH - 24"x 60"	
1	P	SOLID PLASTIC PEDESTAL BENCH - 24"x 84"	
1	Q	STAINLESS STEEL MOP AND BROOM HOLDER	

12' 6' 0' 1' 2' 3' 4' 5'
1/2" = 1'-0"

60% SUBMITTAL - NOT FOR CONSTRUCTION

GENERAL SHEET NOTES

SHEET KEYNOTES

NO.	BY	CHK	APP
B	EVB	BDF	EVB

7/30/2019 — 60% SUBMITTAL — REVISIONS AND RECORD OF USE

FRASER SEIPLE ARCHITECTS
JOINT VENTURE
BLACK & VEATCH
FILANC

CITY OF MORRO BAY
MORRO BAY WATER
RECLAMATION FACILITY (WRF)

OPERATIONS BUILDING
ARCHITECTURAL
ENLARGED RESTROOM PLANS

DESIGNED: BDF
DETAILED: ANH
CHECKED: -
APPROVED: -
DATE:

0 1/2 1
IF THIS BAR DOES NOT MEASURE 1" THEN DRAWING IS NOT TO FULL SCALE

PROJECT NO. 400530

95-A-403
SHEET OF

PLOTTED: 7/29/2019 8:49:32 PM
D400530

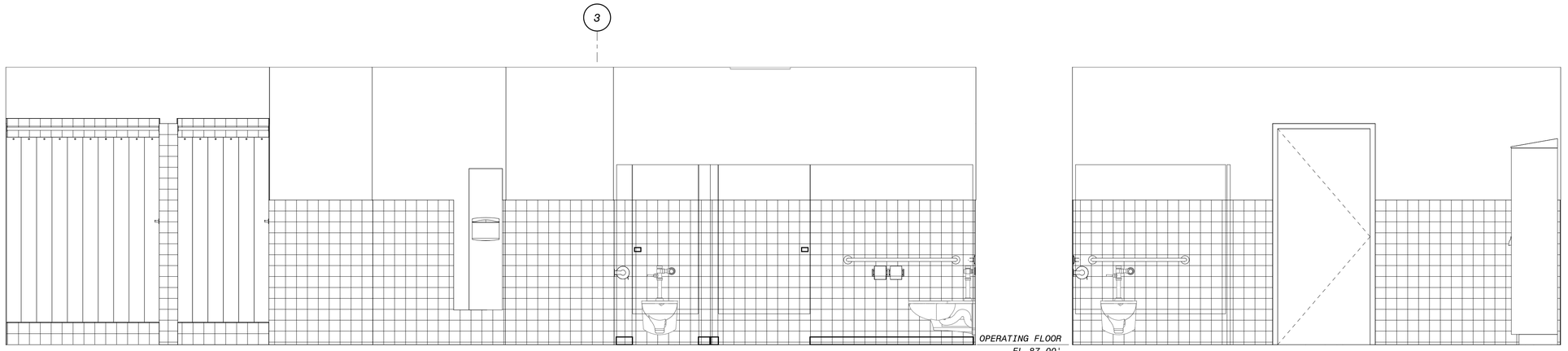

1 MENS LOCKER ROOM NORTH ELEVATION
95-A-403 1/2" = 1'-0"

2 MENS LOCKER ROOM EAST ELEVATION
95-A-403 1/2" = 1'-0"

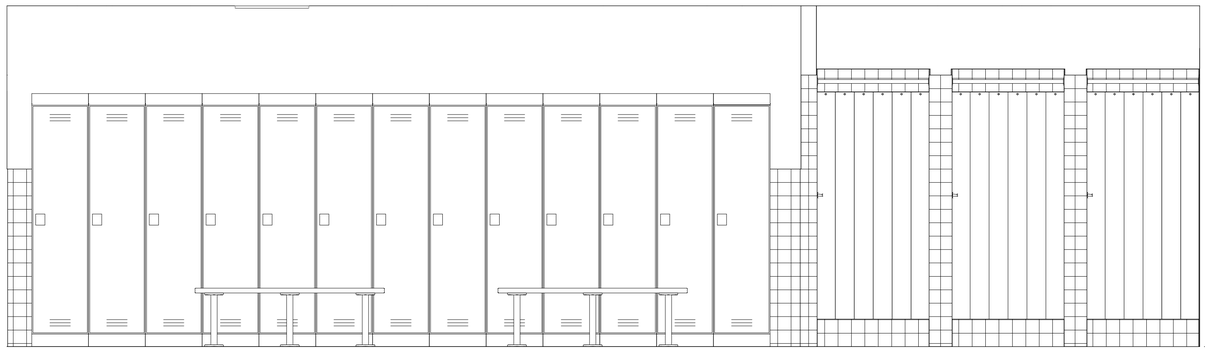

3 MENS LOCKER ROOM SOUTH ELEVATION
95-A-403 1/2" = 1'-0"

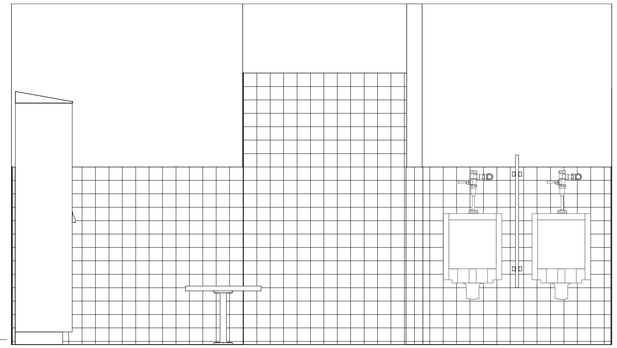

4 MENS LOCKERROOM WEST ELEVATION
95-A-403 1/2" = 1'-0"

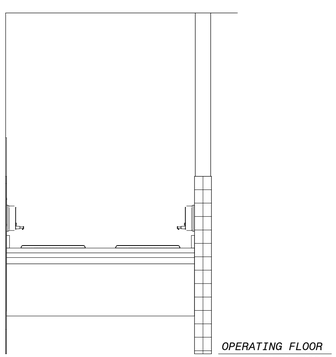

5 MENS LOCKER ROOM EAST ELEVATION @ SINK
95-A-403 1/2" = 1'-0"

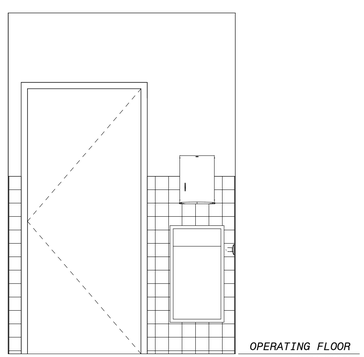

6 UNISEX RESTROOM WEST ELEVATION
95-A-403 1/2" = 1'-0"

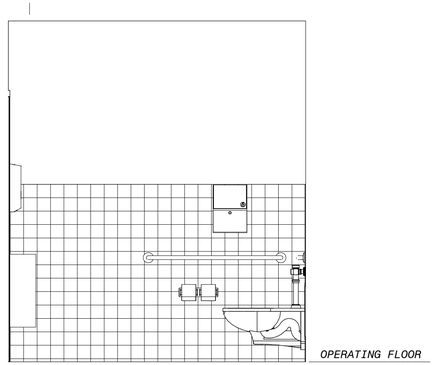

7 UNISEX RESTROOM NORTH ELEVATION
95-A-102 1/2" = 1'-0"

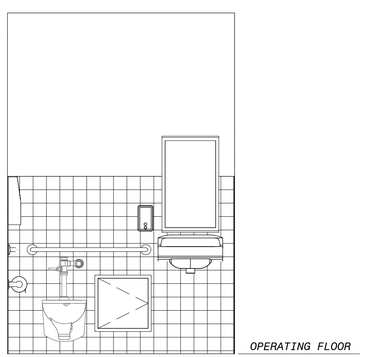

8 UNISEX RESTROOM EAST ELEVATION
95-A-403 1/2" = 1'-0"

12' 6' 0' 1' 2' 3' 4' 5'
1/2" = 1'-0"

60% SUBMITTAL - NOT FOR CONSTRUCTION

NO.	BY	CHK	APP	DATE	REVISIONS AND RECORD OF USE
B	EVB	BDF	EVB	7/30/2019	60% SUBMITTAL

FRASER SEIPLE ARCHITECTS
JOINT VENTURE
BLACK & VEATCH
FILANC

CITY OF MORRO BAY
MORRO BAY WATER
RECLAMATION FACILITY (WRF)

OPERATIONS BUILDING
ARCHITECTURAL
RESTROOM AND LOCKER ROOM ELEVATIONS

DESIGNED: BDF
DETAILED: ANH
CHECKED: -
APPROVED: -
DATE:

0 1/2 1
IF THIS BAR DOES NOT MEASURE 1" THEN DRAWING IS NOT TO FULL SCALE

PROJECT NO.
400530

95-A-404
SHEET
OF

PLOTTED: 7/29/2019 8:49:37 PM
D400530

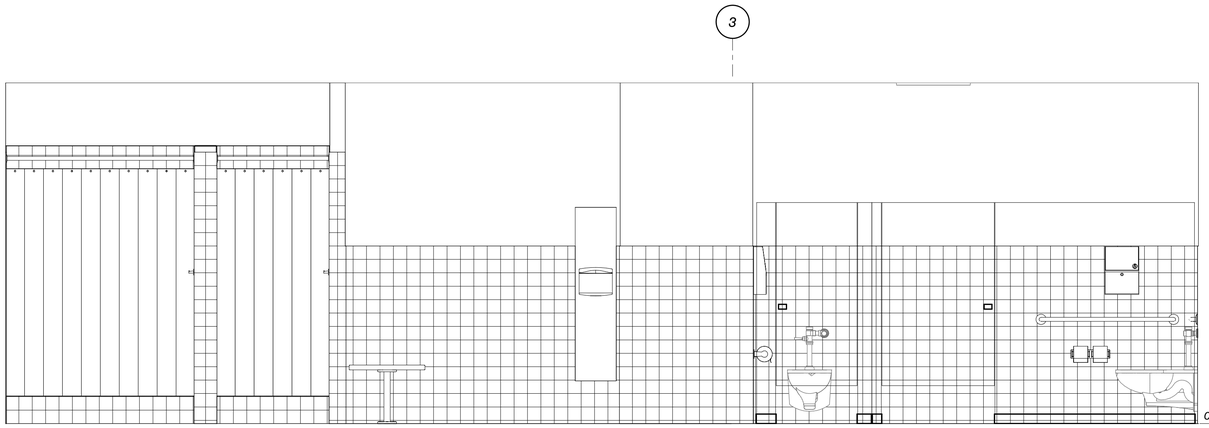

1 WOMENS LOCKER ROOM NORTH ELEVATION
95-A-403 1/2" = 1'-0"

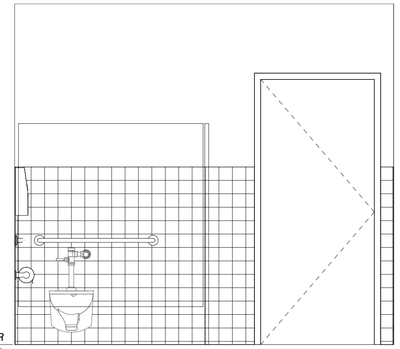

2 WOMENS LOCKER ROOM EAST ELEVATION
95-A-403 1/2" = 1'-0"

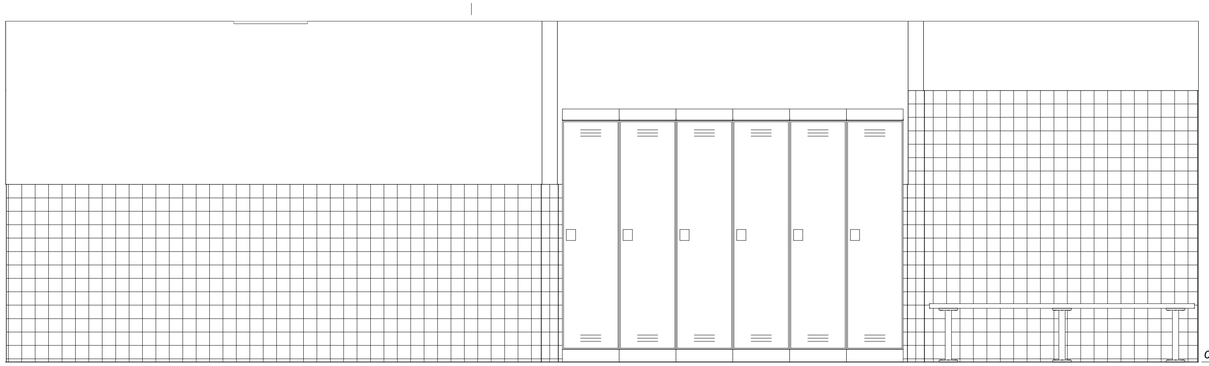

3 WOMENS LOCKER ROOM SOUTH ELEVATION
95-A-403 1/2" = 1'-0"

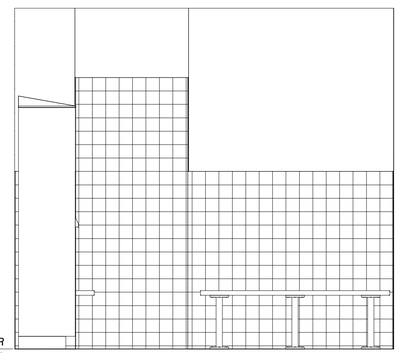

4 WOMENS LOCKERROOM WEST ELEVATION
95-A-403 1/2" = 1'-0"

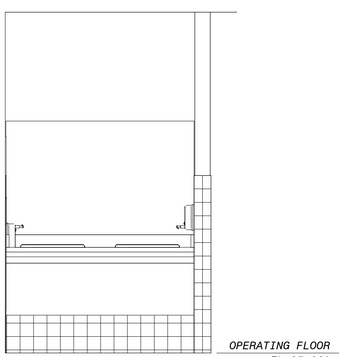

5 WOMENS LOCKER ROOM EAST ELEVATION @ SINK
95-A-403 1/2" = 1'-0"

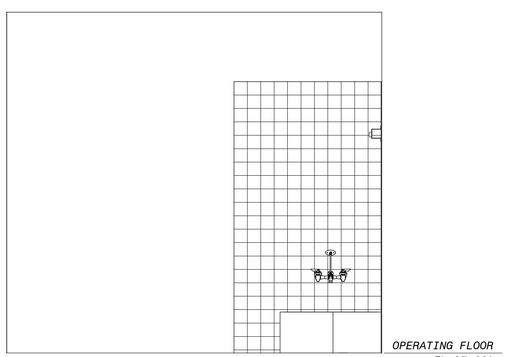

6 JANITORS CLOSET ELEVATION - WEST
95-A-403 1/2" = 1'-0"

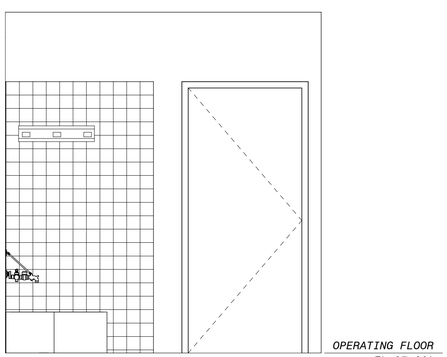

7 JANITORS CLOSET ELEVATION - NORTH
95-A-403 1/2" = 1'-0"

12' 6' 0' 1' 2' 3' 4' 5'
1/2" = 1'-0"

60% SUBMITTAL - NOT FOR CONSTRUCTION

GENERAL SHEET NOTES

SHEET KEYNOTES

NO.	BY	CHK	APP
B	EVB	BDF	EVB

60% SUBMITTAL
REVISIONS AND RECORD OF USE
7/30/2019
DATE

FRASER SEIPLE ARCHITECTS
JOINT VENTURE
BLACK & VEATCH
FILANC

CITY OF MORRO BAY
MORRO BAY WATER
RECLAMATION FACILITY (WRF)

OPERATIONS BUILDING
ARCHITECTURAL
RESTOOM AND LOCKER ROOM ELEVATIONS

DESIGNED: BDF
DETAILED: ANH
CHECKED: -
APPROVED: -
DATE:

0 1/2 1
IF THIS BAR DOES NOT MEASURE 1" THEN DRAWING IS NOT TO FULL SCALE

PROJECT NO.
400530

95-A-405
SHEET
OF

PLOTTED: 7/29/2019 8:49:40 PM
D400530

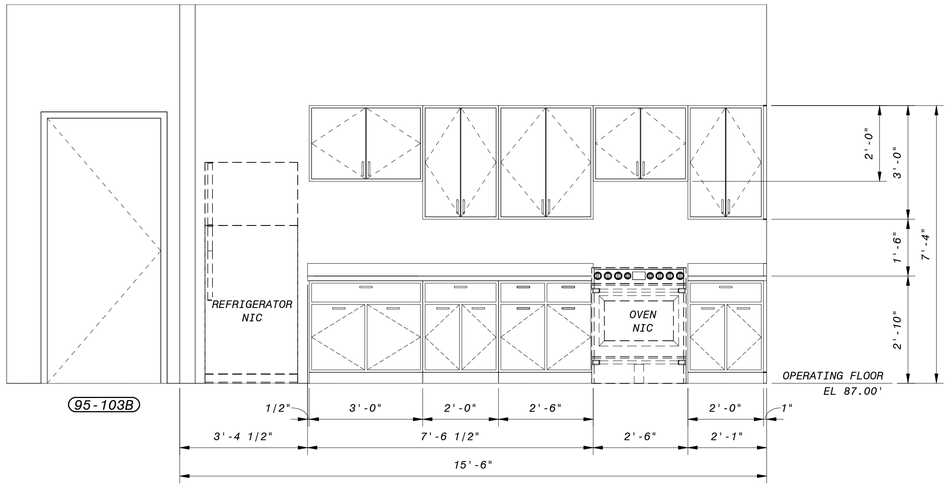

A BREAKROOM ELEVATION
95-A-406 1/2" = 1'-0"

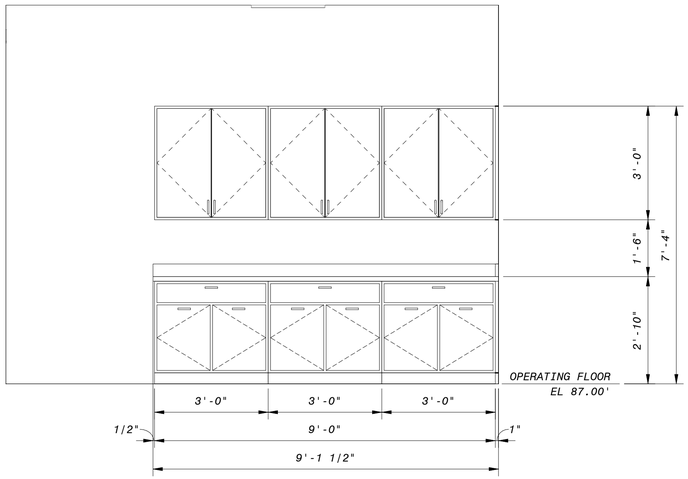

B COPY ROOM ELEVATION - EAST
95-A-406 1/2" = 1'-0"

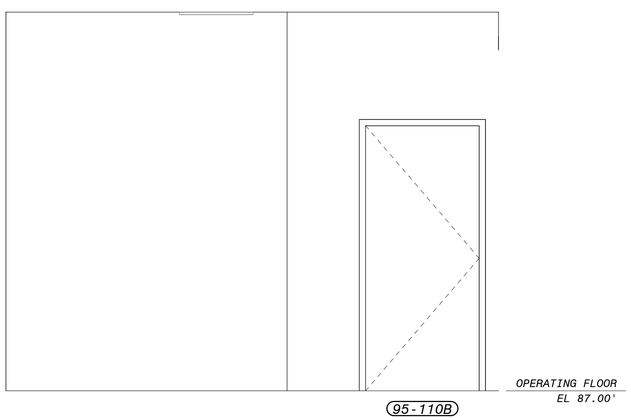

C COPY ROOM ELEVATION - WEST
95-A-406 1/2" = 1'-0"

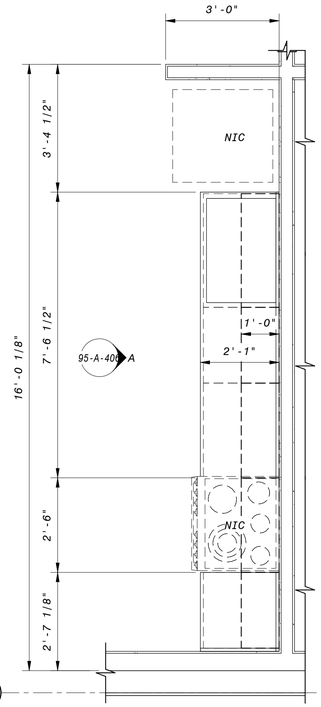

A ENLARGED BREAKROOM PLAN
1 95-A-401 1/2" = 1'-0"

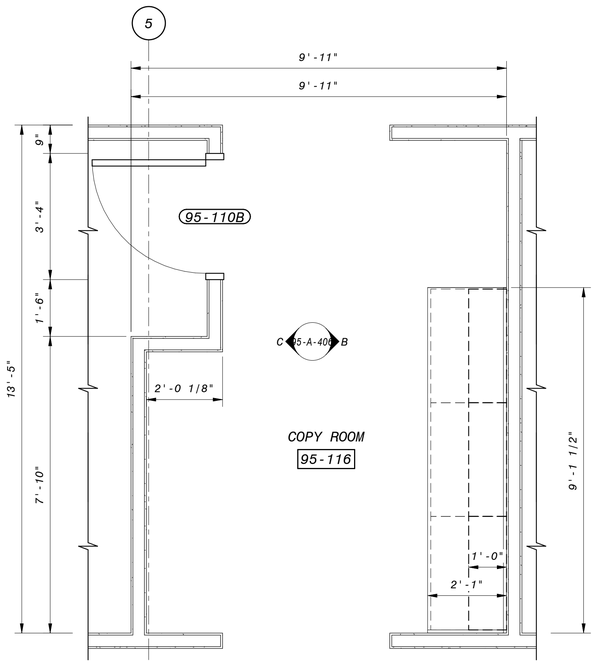

2 ENLARGED COPY ROOM PLAN
95-A-401 1/2" = 1'-0"

12' 6' 0' 1' 2' 3' 4' 5'
1/2" = 1'-0"

60% SUBMITTAL - NOT FOR CONSTRUCTION

GENERAL SHEET NOTES

SHEET KEYNOTES

NO.	BY	CHK	APP
B	EVB	BDF	EVB

DATE	REVISIONS AND RECORD OF USE
7/30/2019	60% SUBMITTAL

FRASER SEIPLE ARCHITECTS
JOINT VENTURE
BLACK & VEATCH
FILANC

CITY OF MORRO BAY
MORRO BAY WATER
RECLAMATION FACILITY (WRF)

OPERATIONS BUILDING
ARCHITECTURAL
ENLARGED CASEWORK PLANS AND ELEVATIONS

DESIGNED: BDF
DETAILED: ANH
CHECKED: -
APPROVED: -
DATE:

0 1/2 1
IF THIS BAR DOES NOT MEASURE 1" THEN DRAWING IS NOT TO FULL SCALE

PROJECT NO.
400530

95-A-406
SHEET
OF

PLOTTED: 7/29/2019 8:49:41 PM
D400530

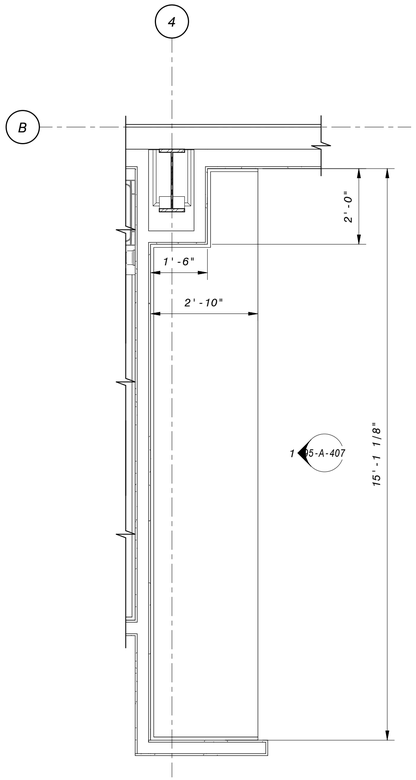

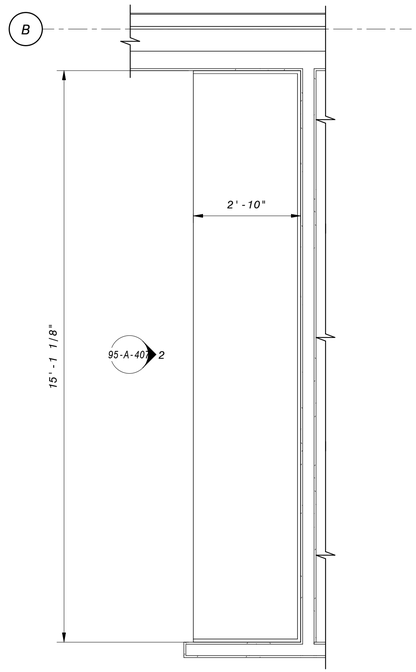

3 ENLARGED CONTROL ROOM - WEST PLAN

95-A-401 1/2" = 1'-0"

4 ENLARGED CONTROL ROOM - EAST PLAN

95-A-401 1/2" = 1'-0"

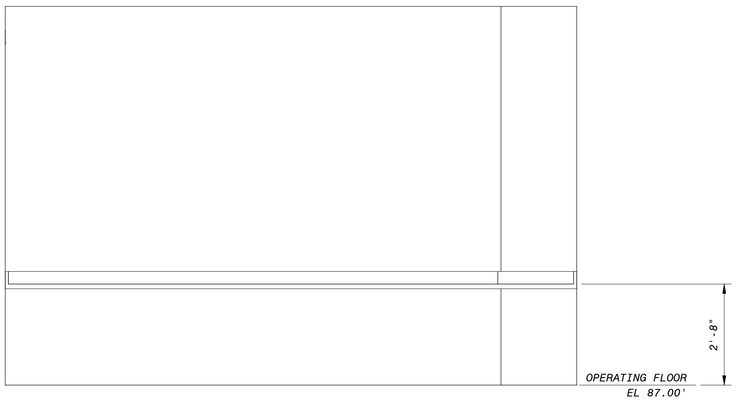



1 CONTROL ROOM ELEVATION - WEST

95-A-407 1/2" = 1'-0"

2 CONTROLE ROOM ELEVATION - EAST

95-A-407 1/2" = 1'-0"

GENERAL SHEET NOTES

SHEET KEYNOTES

12' 6' 0' 1' 2' 3' 4' 5'

1/2" = 1'-0"

60% SUBMITTAL - NOT FOR CONSTRUCTION

NO.	BY	CHK	APP
B	EVB	BDF	EVB

DATE	REVISIONS AND RECORD OF USE
7/30/2019	60% SUBMITTAL

FRASER SEIPLE ARCHITECTS

JOINT VENTURE

BLACK & VEATCH

FILANC

CITY OF MORRO BAY
MORRO BAY WATER
RECLAMATION FACILITY (WRF)

OPERATIONS BUILDING
ARCHITECTURAL
ENLARGED CASEWORK PLANS AND ELEVATIONS

DESIGNED: BDF
DETAILED: ANH
CHECKED: -
APPROVED: -
DATE:

0 1/2 1

IF THIS BAR DOES NOT MEASURE 1" THEN DRAWING IS NOT TO FULL SCALE

PROJECT NO.
400530

95-A-407
SHEET
OF

PLOTTED: 7/29/2019 8:49:43 PM
D400530

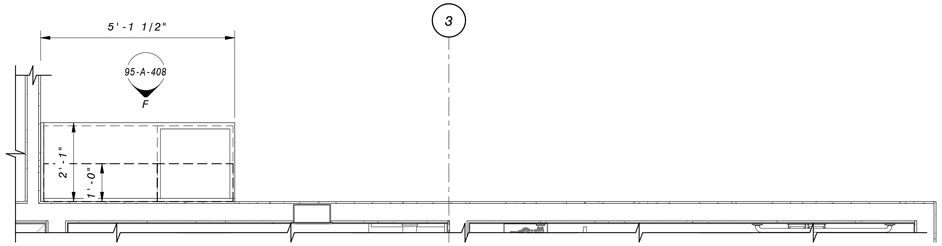

3 ENLARGED LAUNDRY/UNIFORM ROOM - SOUTH PLAN
95-A-402 1/2" = 1'-0"

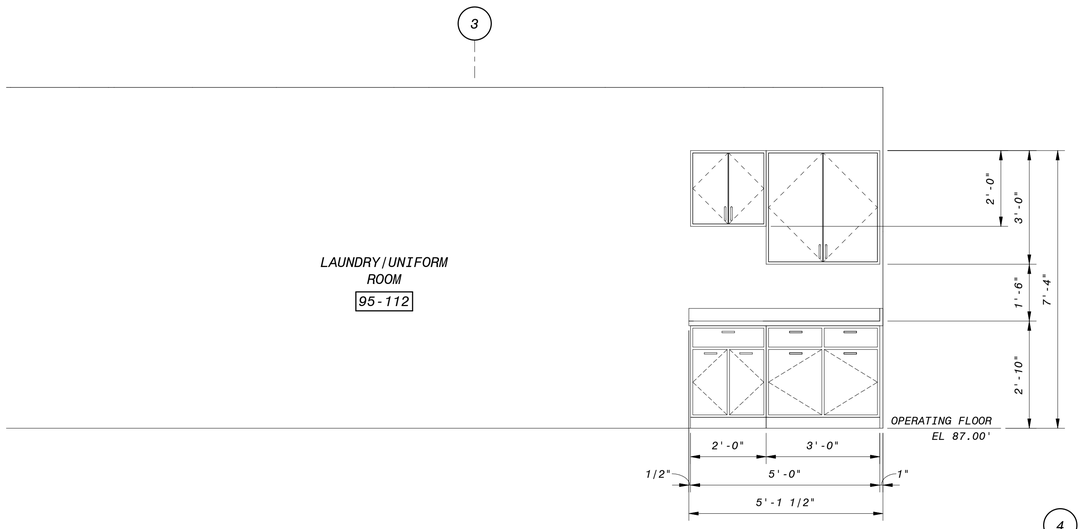

F LAUNDRY/UNIFORM ROOM - SOUTH
95-A-408 1/2" = 1'-0"

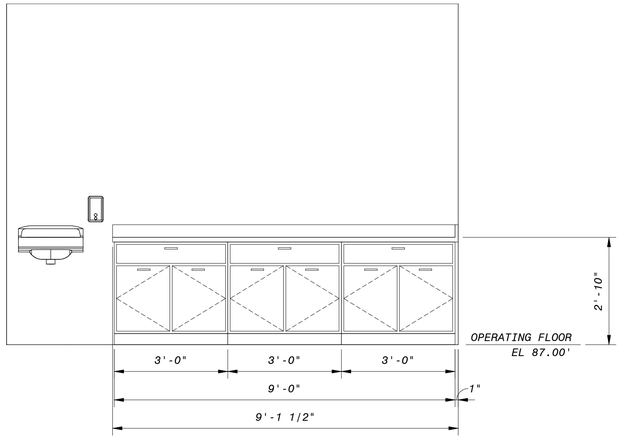

G LAUNDRY/UNIFORM ROOM - EAST
95-A-408 1/2" = 1'-0"

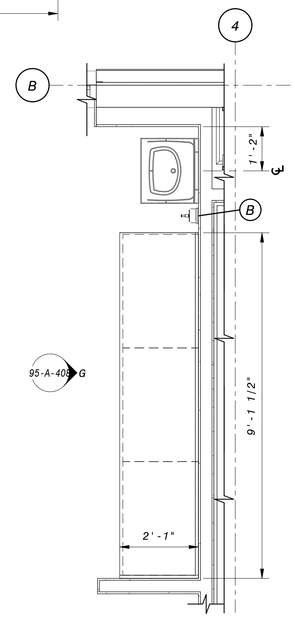

6 ENLARGED LAUNDRY/UNIFORM ROOM - EAST PLAN
95-A-402 1/2" = 1'-0"

12' 6' 0' 1' 2' 3' 4' 5'
1/2" = 1'-0"

60% SUBMITTAL - NOT FOR CONSTRUCTION

GENERAL SHEET NOTES

SHEET KEYNOTES

NO.	BY	CHK	APP
B	EVB	BDF	EVB

60% SUBMITTAL
REVISIONS AND RECORD OF USE
DATE 7/30/2019

JOINT VENTURE
FRASER SEIPLE ARCHITECTS
BLACK & VEATCH
FILANC

CITY OF MORRO BAY
MORRO BAY WATER
RECLAMATION FACILITY (WRF)

OPERATIONS BUILDING
ARCHITECTURAL
ENLARGED CASEWORK PLANS AND ELEVATIONS

DESIGNED: BDF
DETAILED: ANH
CHECKED: -
APPROVED: -
DATE:

0 1/2 1
IF THIS BAR DOES NOT MEASURE 1" THEN DRAWING IS NOT TO FULL SCALE

PROJECT NO.
400530

95-A-408
SHEET
OF

PLOTTED: 7/29/2019 8:49:44 PM
D400530



NORTHEAST PERSPECTIVE



SOUTHWEST PERSPECTIVE

60% SUBMITTAL - NOT FOR CONTRUCTION

NO.	BY	CHK	APP	DATE	REVISIONS AND RECORD OF USE
B	BDF	BDF	EVB	7/30/2019	60% SUBMITTAL
A	BDF	BDF	EVB	3/5/2019	30% SUBMITTAL

FRASER SEIPLE ARCHITECTS

JOINT VENTURE

BLACK & VEATCH

FILANC

CITY OF MORRO BAY
MORRO BAY WATER
RECLAMATION FACILITY (WRF)

MAINTENANCE BUILDING
ARCHITECTURAL
PERSPECTIVES

DESIGNED: BDF
DETAILED: ANH
CHECKED: -
APPROVED: -
DATE:

0 1/2 1

IF THIS BAR DOES NOT MEASURE 1" THEN DRAWING IS NOT TO FULL SCALE

PROJECT NO.
400530

96-A-001
SHEET
OF

PLOTTED: 7/29/2019 8:40:24 PM
D400530

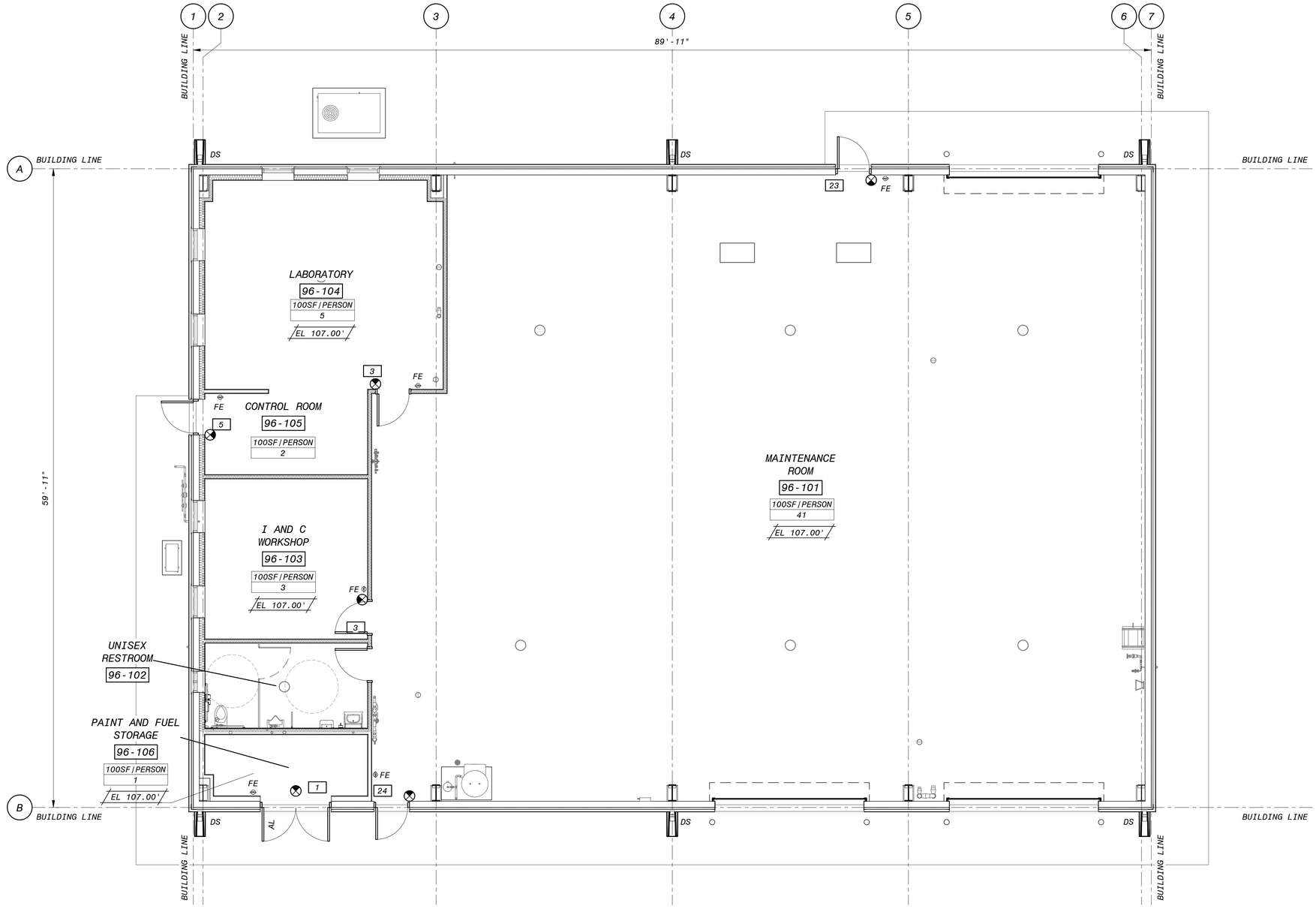

LIFE SAFETY PLAN

3/16" = 1'-0"

GENERAL SHEET NOTES

SHEET KEYNOTES

LIFE SAFETY LEGEND

FE	FIRE EXTINGUISHER (FE)
X'-X"	PATH OF EGRESS TRAVEL
100SF/PERSON 10	OCCUPANTS PER SF OCCUPANT LOAD
1	CUMULATIVE OCCUPANT LOAD AT EXIT
	EXIT SYMBOL
AL	ACTIVE LEAF
DN	DOWN
DS	DOWNSPOUT

BUILDING CODE ANALYSIS

MAINTENANCE BUILDING	
APPLICABLE BUILDING CODES:	
OCCUPANCY	-
ACTUAL FLOOR AREA	0,000 SF TOTAL
ACTUAL HEIGHT	1 STORY (20.33 FT)
TYPE OF CONSTRUCTION	TYPE --
ALLOWABLE AREA	0,000 SF
ALLOWABLE HEIGHT	2 STORIES (55 FT)
DESIGN OCCUPANT LOAD	0 PERSONS
ADA ACCESSIBILITY	-
OCCUPANCY SEPARATION	-
FIRE SPRINKLERS	-

6" 4' 2' 0' 5' 10'

3/16" = 1'-0"

60% SUBMITTAL - NOT FOR CONTRUCTION

NO.	BY	CHK	APP
B	BDF	BDF	EVB

DATE	REVISIONS AND RECORD OF USE
7/30/2019	60% SUBMITTAL

FRASER SEIPLE ARCHITECTS

BLACK & VEATCH

JOINT VENTURE

FILANC

CITY OF MORRO BAY
MORRO BAY WATER RECLAMATION FACILITY (WRF)

MAINTENANCE BUILDING
ARCHITECTURAL
LIFE SAFETY PLAN

DESIGNED: BDF
DETAILED: ANH
CHECKED: -
APPROVED: -
DATE:

0 1/2 1

IF THIS BAR DOES NOT MEASURE 1" THEN DRAWING IS NOT TO FULL SCALE

PROJECT NO.
400530

96-A-101
SHEET
OF

PLOTTED: 7/29/2019 8:29:44 PM
D400530

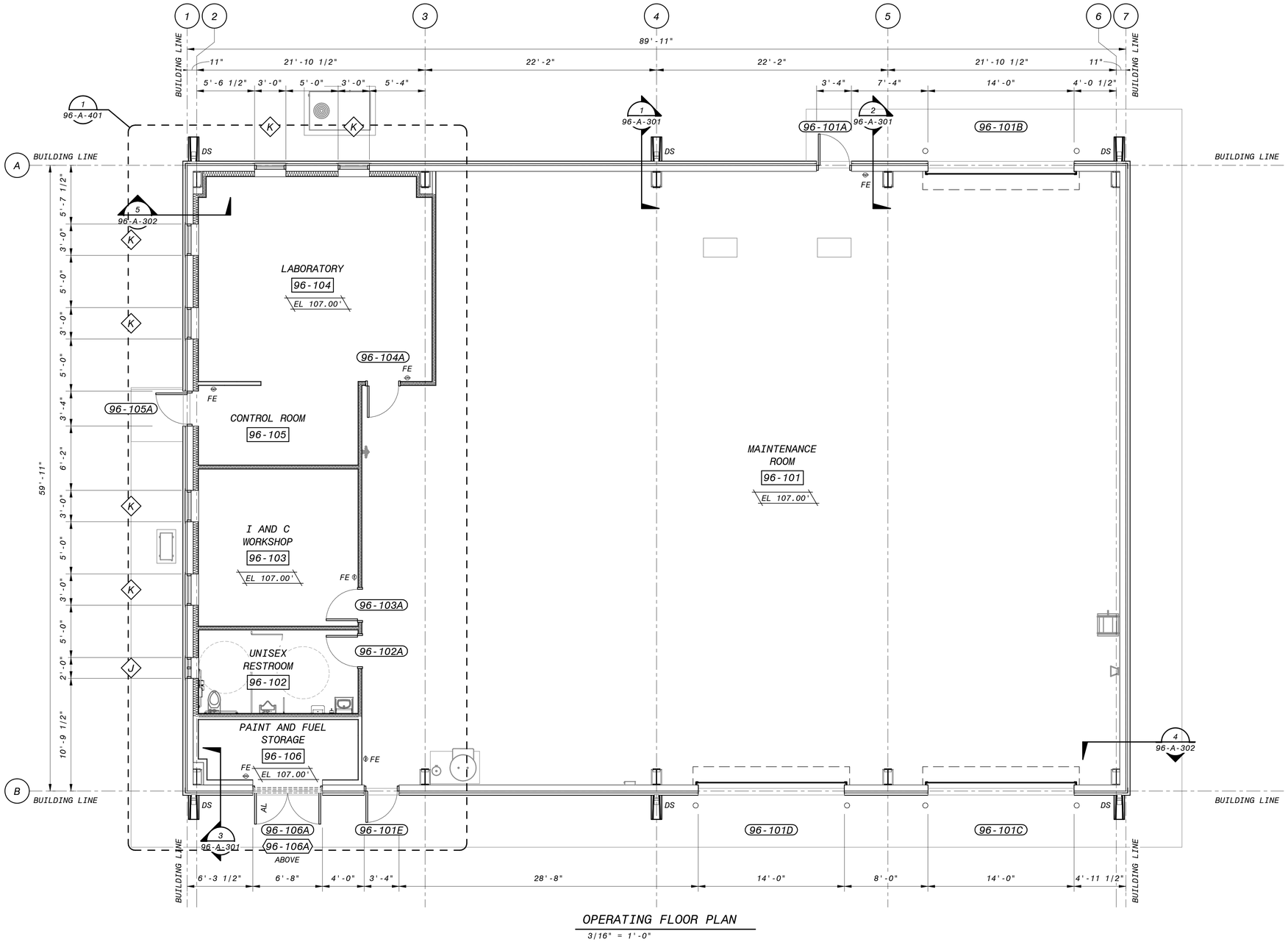

OPERATING FLOOR PLAN

3/16" = 1'-0"

GENERAL SHEET NOTES

SHEET KEYNOTES

NO.	BY	CHK	APP	DATE	REVISIONS AND RECORD OF USE
B	BDF	BDF	EVB	7/30/2019	60% SUBMITTAL
A	BDF	BDF	EVB	3/5/2019	30% SUBMITTAL

FRASER SEIPLE ARCHITECTS

JOINT VENTURE

BLACK & VEATCH

FILANC

CITY OF MORRO BAY
MORRO BAY WATER
RECLAMATION FACILITY (WRF)

MAINTENANCE BUILDING
ARCHITECTURAL
OPERATING FLOOR PLAN

DESIGNED: BDF
DETAILED: ANH
CHECKED: -
APPROVED: -
DATE:

0 1/2 1

IF THIS BAR DOES NOT MEASURE 1" THEN DRAWING IS NOT TO FULL SCALE

PROJECT NO.
400530

96-A-102
SHEET
OF

6" 4' 2' 0' 5' 10'

3/16" = 1'-0"

60% SUBMITTAL - NOT FOR CONTRUCTION

PLOTTED: 7/29/2019 8:41:27 PM
D400530

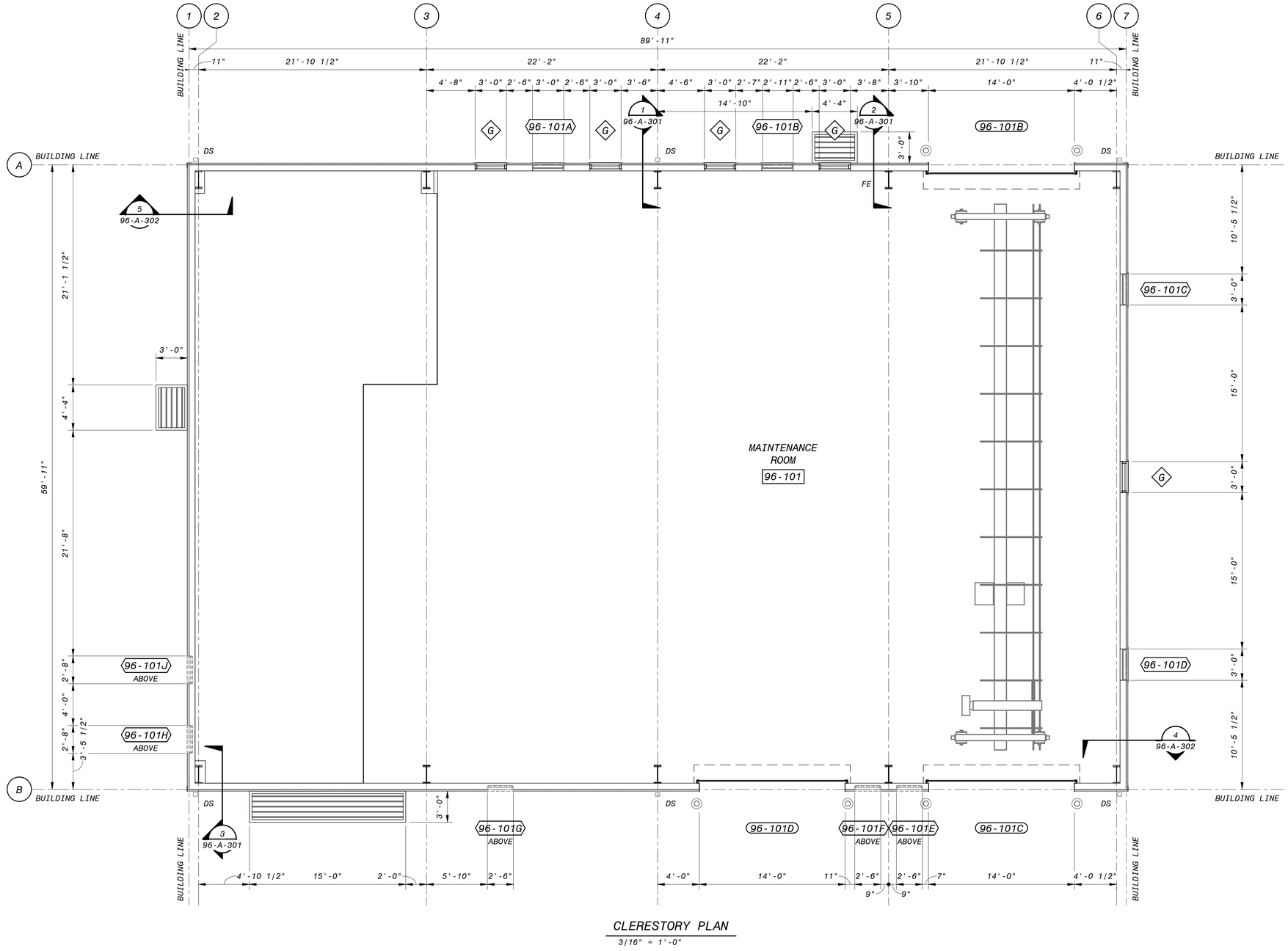

CLERESTORY PLAN

3/16" = 1'-0"

GENERAL SHEET NOTES

SHEET KEYNOTES

NO.	BY	CHK	APP
B	BDF	BDF	EVB

60% SUBMITTAL — REVISIONS AND RECORD OF USE — 7/30/2019 DATE

FRASER SEIPLE ARCHITECTS

JOINT VENTURE

BLACK & VEATCH

FILANC

CITY OF MORRO BAY
MORRO BAY WATER RECLAMATION FACILITY (WRF)

MAINTENANCE BUILDING
ARCHITECTURAL
CLERESTORY PLAN

DESIGNED: BDF
DETAILED: ANH
CHECKED: -
APPROVED: Approver
DATE:

0 1/2 1
IF THIS BAR DOES NOT MEASURE 1" THEN DRAWING IS NOT TO FULL SCALE

PROJECT NO. 400530

96-A-103
SHEET OF

6" 4' 2' 0' 5' 10'
3/16" = 1'-0"

60% SUBMITTAL - NOT FOR CONTRUCTION

PLOTTED: 7/29/2019 8:29:47 PM
D400530

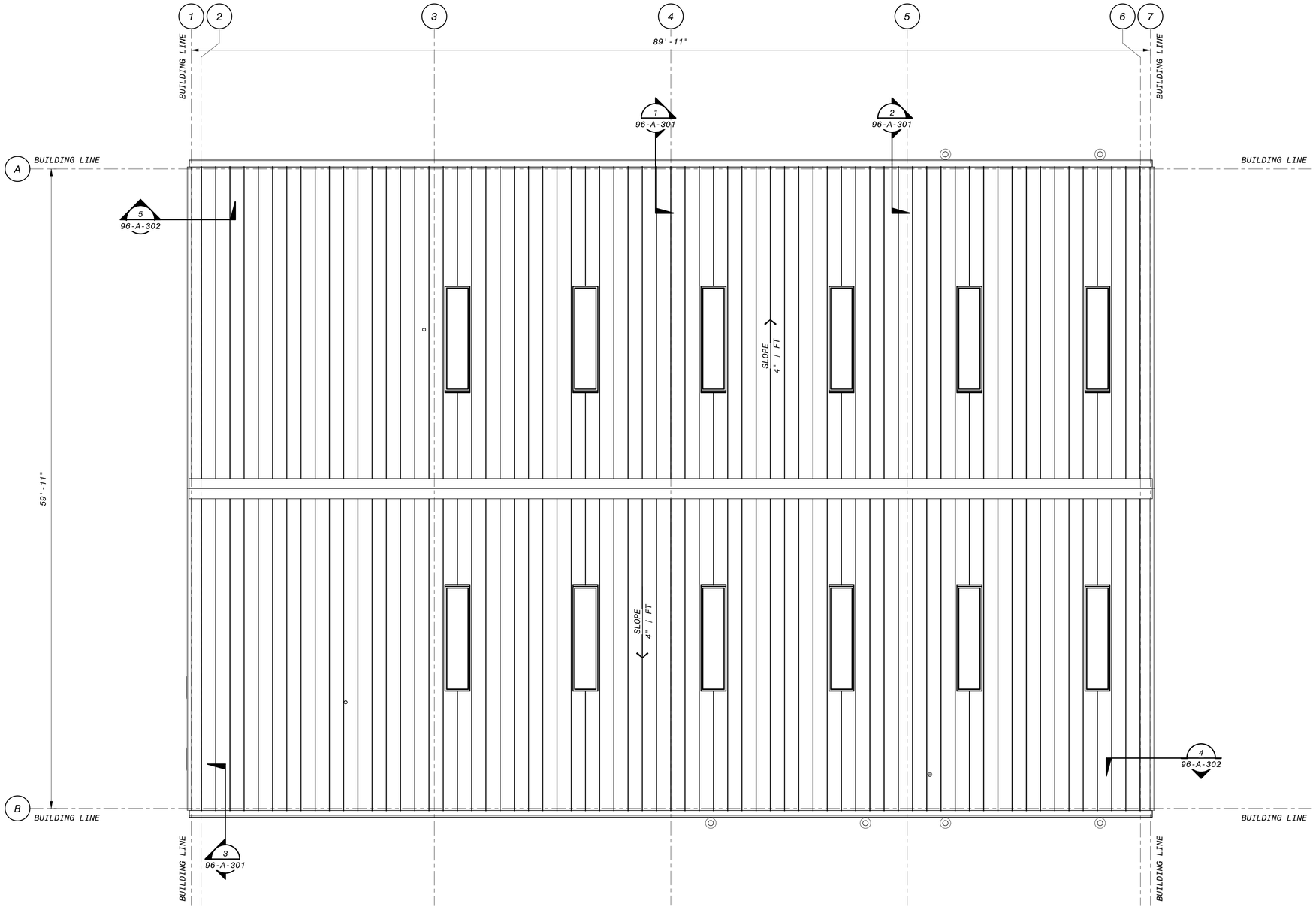

ROOF PLAN
3/16" = 1'-0"

GENERAL SHEET NOTES

SHEET KEYNOTES

6" 4' 2' 0' 5' 10'
3/16" = 1'-0"

60% SUBMITTAL - NOT FOR CONTRUCTION

NO.	BY	CHK	APP
B	BDF	EVB	

60% SUBMITTAL
REVISIONS AND RECORD OF USE
7/30/2019
DATE

FRASER SEIPLE ARCHITECTS
JOINT VENTURE
BLACK & VEATCH
FILANC

CITY OF MORRO BAY
MORRO BAY WATER
RECLAMATION FACILITY (WRF)

MAINTENANCE BUILDING
ARCHITECTURAL
ROOF PLAN

DESIGNED: BDF
DETAILED: ANH
CHECKED: -
APPROVED: -
DATE:

0 1/2 1
IF THIS BAR DOES NOT MEASURE 1" THEN DRAWING IS NOT TO FULL SCALE

PROJECT NO.
400530

96-A-104
SHEET
OF

PLOTTED: 7/29/2019 8:29:48 PM
D400530

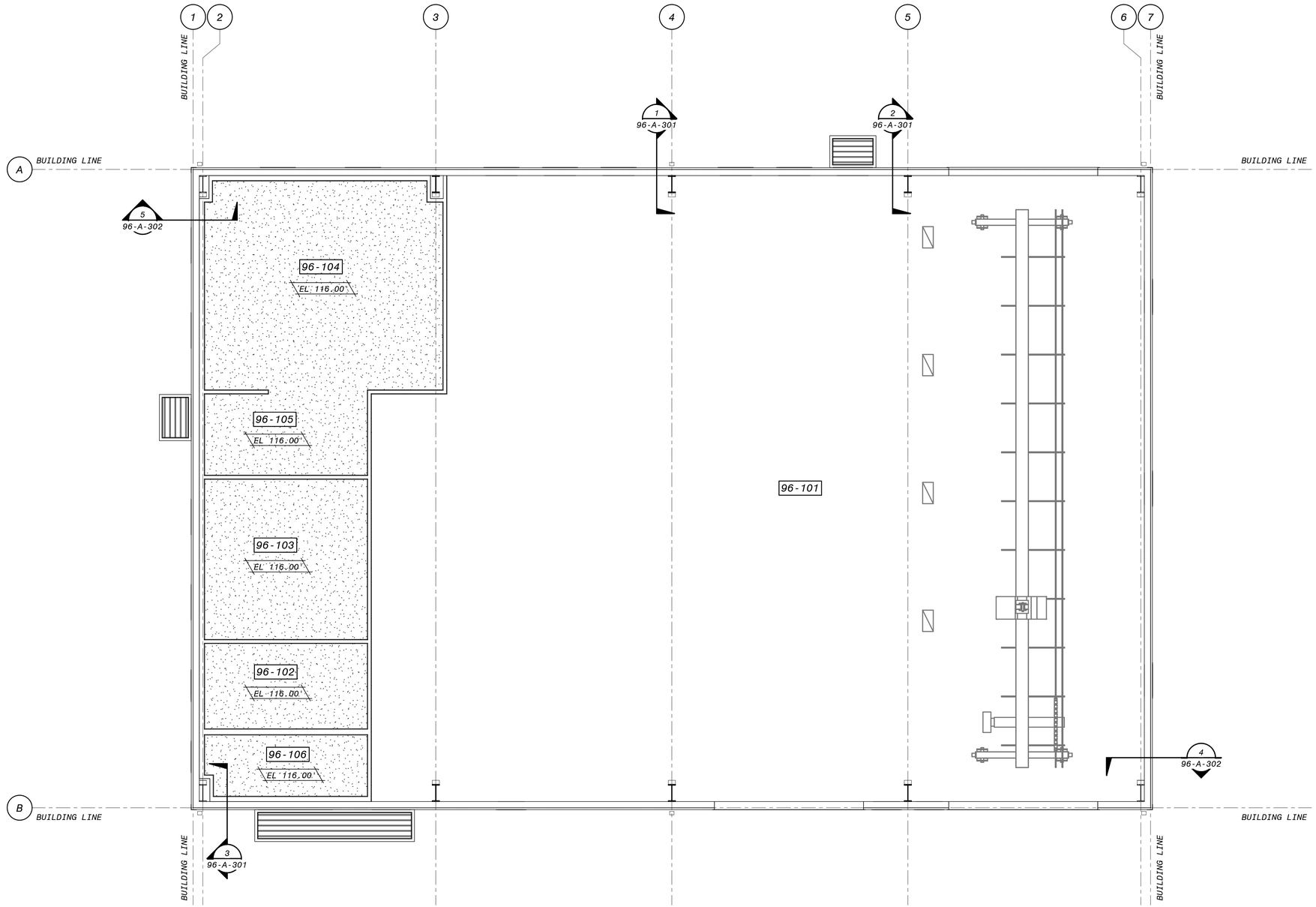

REFLECTED CEILING PLAN

3/16" = 1'-0"

GENERAL SHEET NOTES

SHEET KEYNOTES

CEILING PLAN LEGEND

LIGHT FIXTURES

EXHAUST DIFFUSER OR RETURN DIFFUSER

SUPPLY DIFFUSER

6" 4' 2' 0' 5' 10'

3/16" = 1'-0"

NO.	BY	CHK	APP
B	BDF	EVB	

60% SUBMITTAL — REVISIONS AND RECORD OF USE

DATE: 7/30/2019

FRASER SEIPLE ARCHITECTS

JOINT VENTURE

BLACK & VEATCH

FILANC

CITY OF MORRO BAY
MORRO BAY WATER RECLAMATION FACILITY (WRF)

MAINTENANCE BUILDING
ARCHITECTURAL
REFLECTED CEILING PLAN

DESIGNED: BDF
DETAILED: ANH
CHECKED: -
APPROVED: -
DATE:

0 1/2 1

IF THIS BAR DOES NOT MEASURE 1" THEN DRAWING IS NOT TO FULL SCALE

PROJECT NO. 400530

96-A-105
SHEET OF

60% SUBMITTAL - NOT FOR CONTRUCTION

PLOTTED: 7/29/2019 8:29:49 PM
D400530

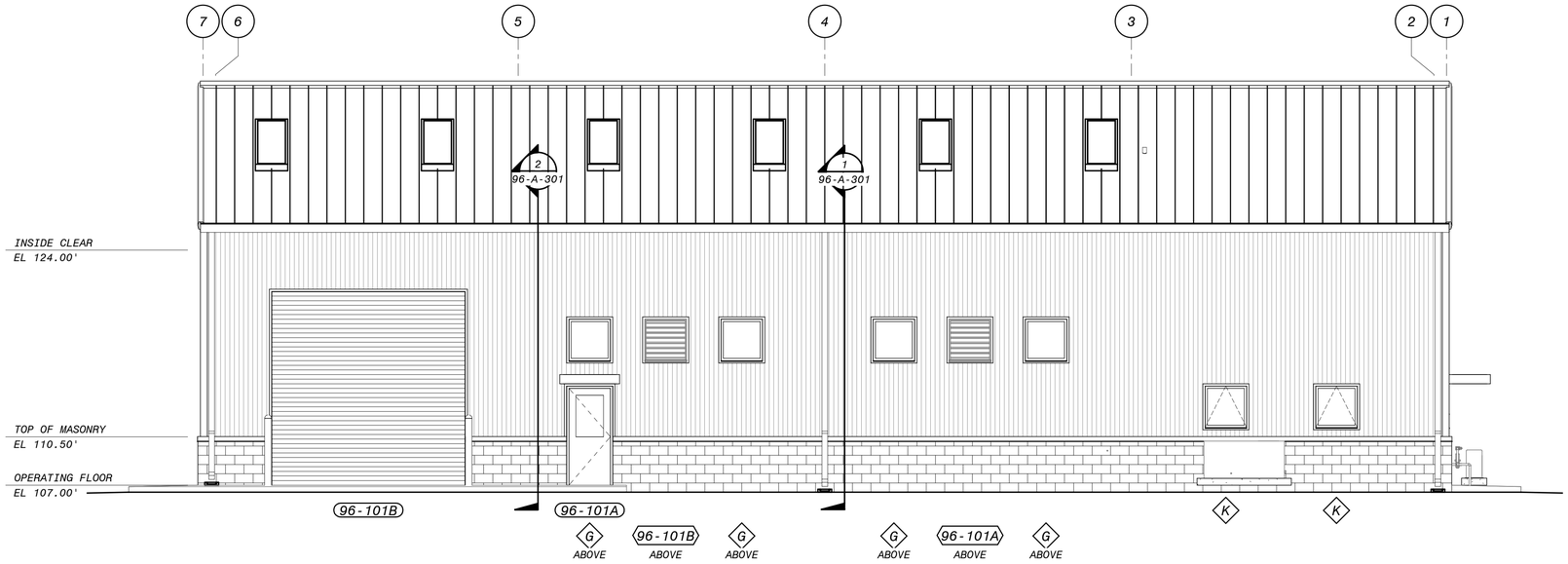

NORTH ELEVATION

3/16" = 1'-0"

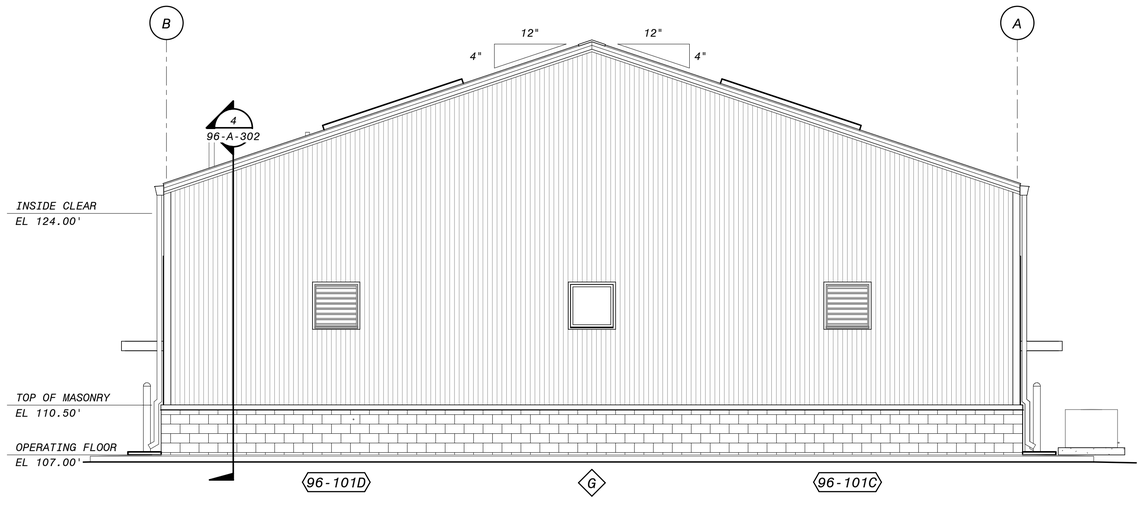

EAST ELEVATION

3/16" = 1'-0"

GENERAL SHEET NOTES

SHEET KEYNOTES

NO.	BY	CHK	APP	DATE	REVISIONS AND RECORD OF USE
B	BDF	BDF	EVB	7/30/2019	60% SUBMITTAL
A	BDF	BDF	EVB	3/5/2019	30% SUBMITTAL

FRASER SEIPLE ARCHITECTS
JOINT VENTURE
BLACK & VEATCH
FILANC

CITY OF MORRO BAY
MORRO BAY WATER
RECLAMATION FACILITY (WRF)

MAINTENANCE BUILDING
ARCHITECTURAL
ELEVATIONS

DESIGNED: BDF
DETAILED: ANH
CHECKED: -
APPROVED: -
DATE:

0 1/2 1
IF THIS BAR DOES NOT MEASURE 1" THEN DRAWING IS NOT TO FULL SCALE

PROJECT NO.
400530

96-A-201
SHEET
OF

6" 4' 2' 0' 5' 10'
3/16" = 1'-0"

60% SUBMITTAL - NOT FOR CONTRUCTION

PLOTTED: 7/29/2019 8:29:51 PM
D400530

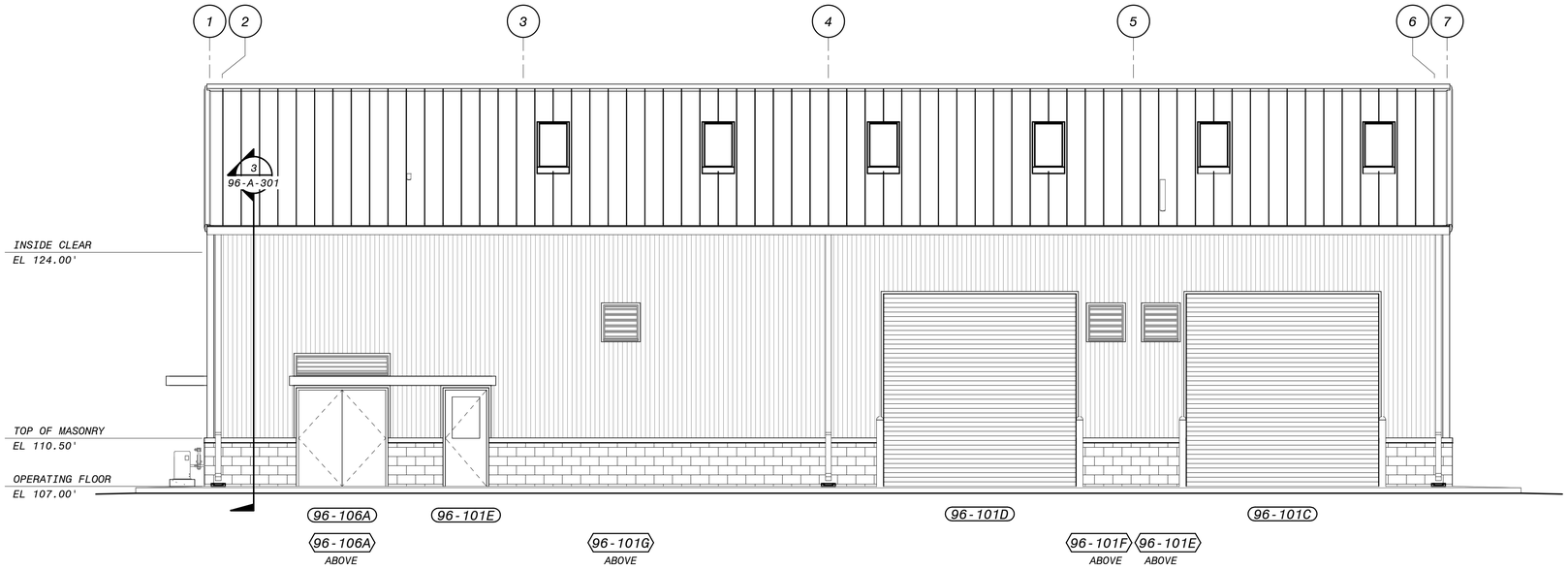

SOUTH ELEVATION

3/16" = 1'-0"

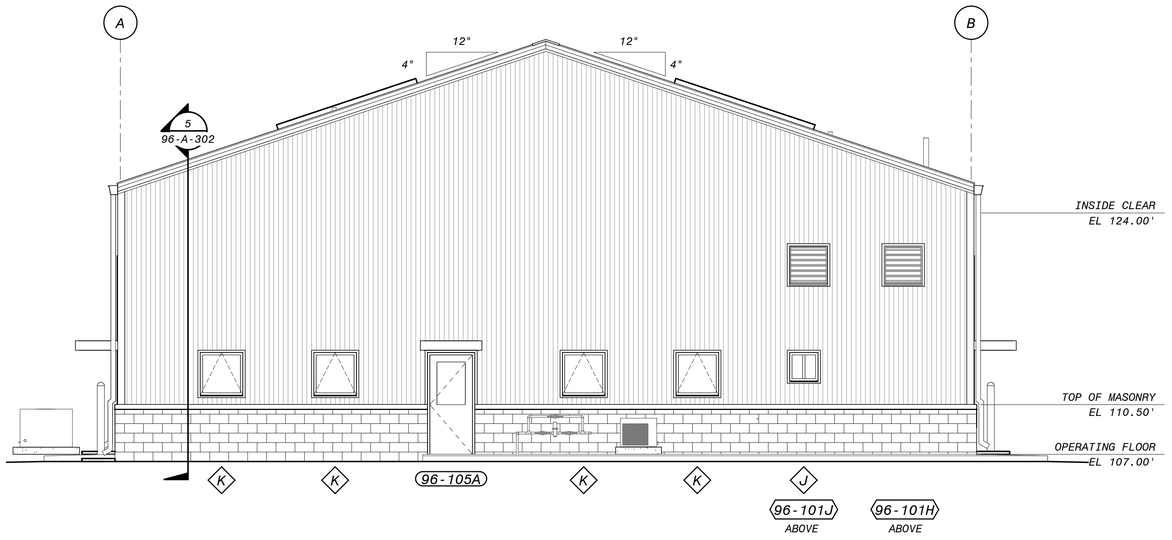

WEST ELEVATION

3/16" = 1'-0"

GENERAL SHEET NOTES

SHEET KEYNOTES

6" 4' 2' 0' 5' 10'

3/16" = 1'-0"

60% SUBMITTAL - NOT FOR CONTRUCTION

NO.	BY	CHK	APP
B	BDF	EVB	

DATE	REVISIONS AND RECORD OF USE
7/30/2019	60% SUBMITTAL

FRASER SEIPLE ARCHITECTS

JOINT VENTURE

BLACK & VEATCH

FILANC

CITY OF MORRO BAY
MORRO BAY WATER
RECLAMATION FACILITY (WRF)

MAINTENANCE BUILDING
ARCHITECTURAL
ELEVATIONS

DESIGNED: BDF
DETAILED: ANH
CHECKED: -
APPROVED: -
DATE:

0 1/2 1

IF THIS BAR DOES NOT MEASURE 1" THEN DRAWING IS NOT TO FULL SCALE

PROJECT NO.
400530

96-A-202
SHEET
OF

PLOTTED: 7/29/2019 8:29:53 PM
D400530

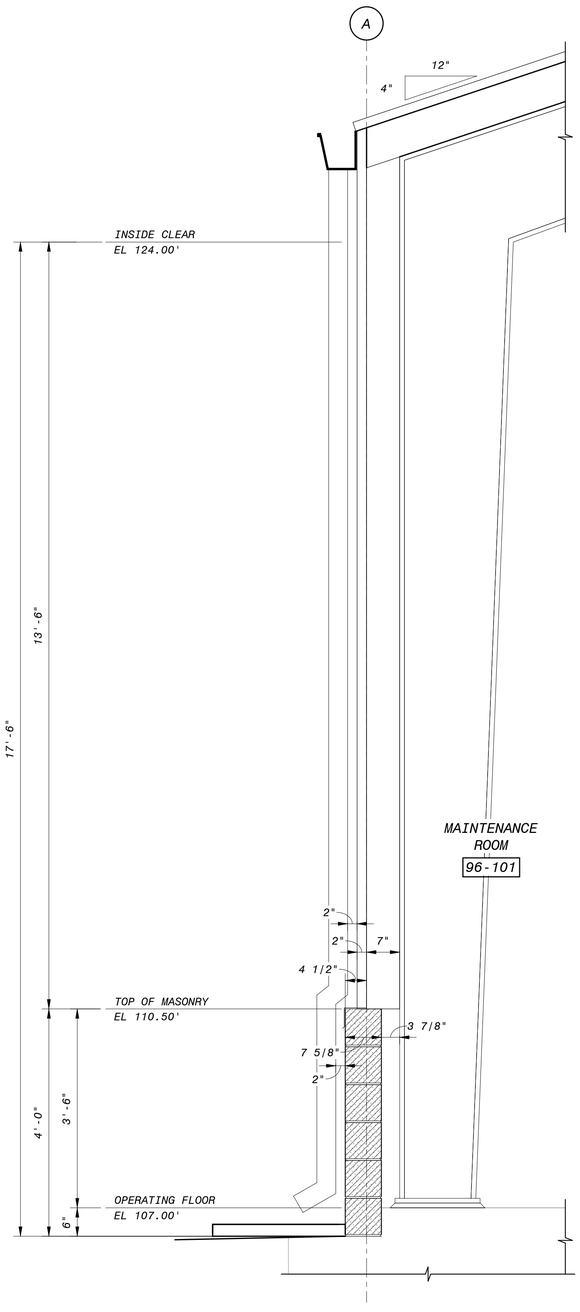

1 SECTION
96-A-102 3/4" = 1'-0"

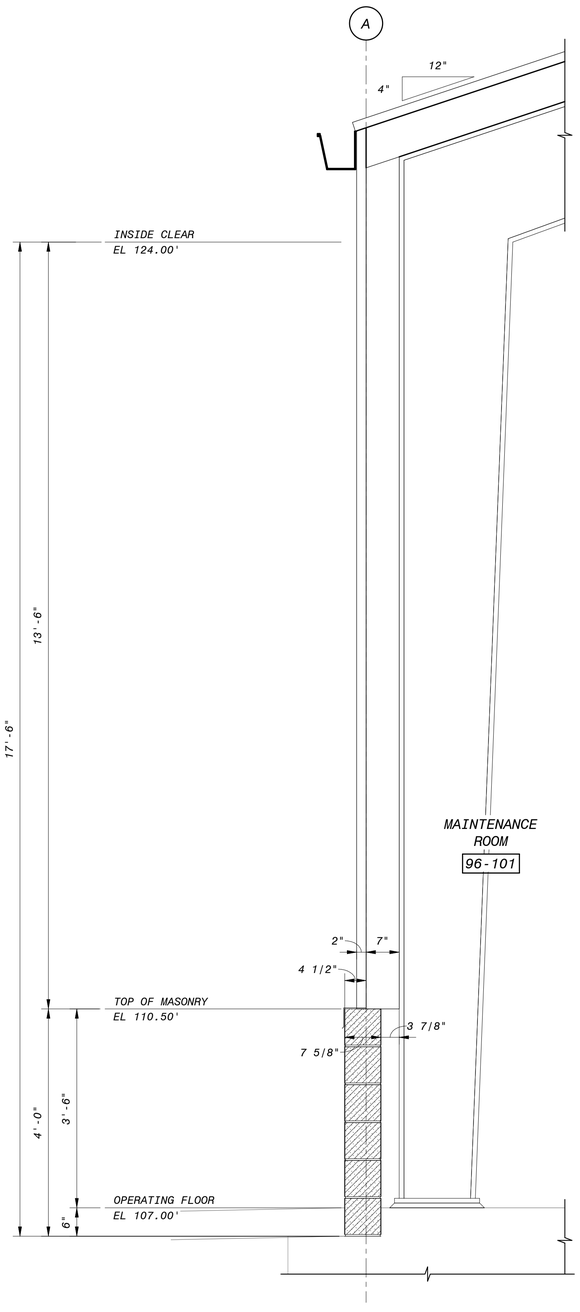

2 SECTION
96-A-102 3/4" = 1'-0"

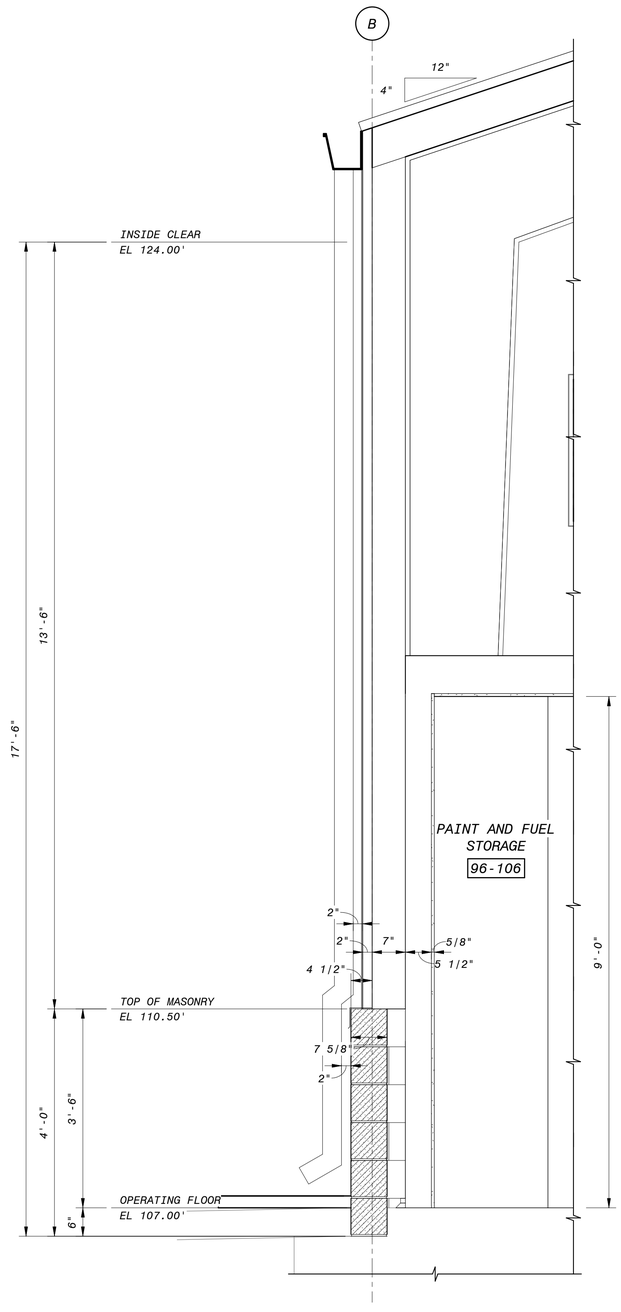

3 SECTION
96-A-102 3/4" = 1'-0"

GENERAL SHEET NOTES

1. FOR VERTICAL REINFORCING AND BOND BEAMS IN MASONRY DESIGN - SEE STRUCTURAL DRAWINGS
2. FOR HORIZONTAL JOINT REINFORCING - SEE SPECIFICATION SECTION 04200

SHEET KEYNOTES

12" 6" 0' 1' 2' 3'
3/4" = 1'-0"

60% SUBMITTAL - NOT FOR CONTRUCTION

NO.	BY	CHK	APP
B	BDF	EVB	

60% SUBMITTAL
REVISIONS AND RECORD OF USE
DATE: 7/30/2019

FRASER SEIPLE ARCHITECTS
JOINT VENTURE
BLACK & VEATCH
FILANC

CITY OF MORRO BAY
MORRO BAY WATER
RECLAMATION FACILITY (WRF)

MAINTENANCE BUILDING
ARCHITECTURAL
WALL SECTIONS

DESIGNED: BDF
DETAILED: ANH
CHECKED: -
APPROVED: -
DATE:

0 1/2 1
IF THIS BAR DOES NOT MEASURE 1" THEN DRAWING IS NOT TO FULL SCALE

PROJECT NO.
400530

96-A-301
SHEET
OF

PLOTTED: 7/29/2019 8:29:54 PM
D400530

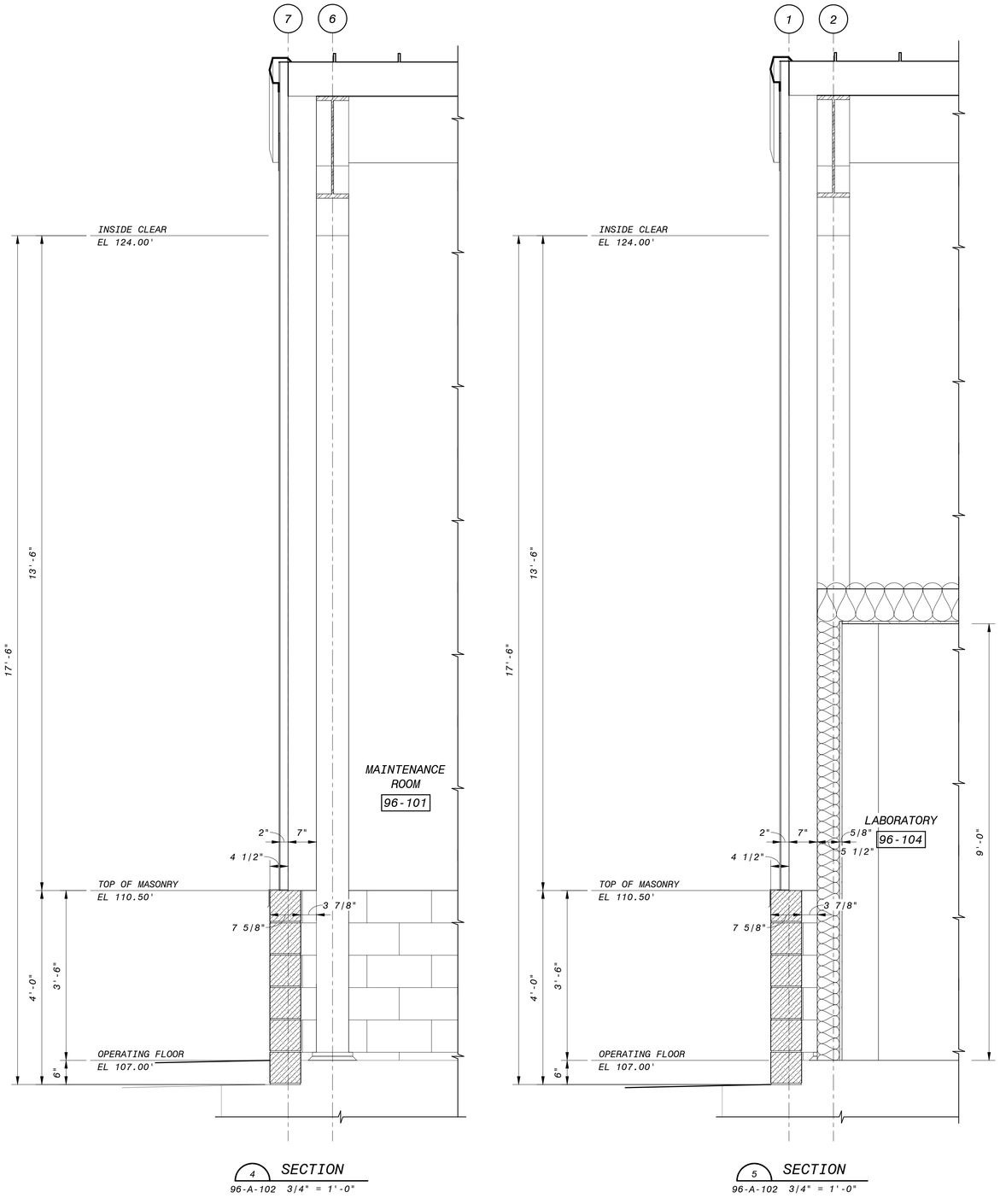

4 SECTION
96-A-102 3/4" = 1'-0"

5 SECTION
96-A-102 3/4" = 1'-0"

GENERAL SHEET NOTES

1. FOR VERTICAL REINFORCING AND BOND BEAMS IN MASONRY DESIGN - SEE STRUCTURAL DRAWINGS
2. FOR HORIZONTAL JOINT REINFORCING - SEE SPECIFICATION SECTION 04200

SHEET KEYNOTES

12" 6" 0' 1' 2' 3'
3/4" = 1'-0"

60% SUBMITTAL - NOT FOR CONTRUCTION

NO.	BY	CHK	APP
B	BDF	EVB	

DATE	REVISIONS AND RECORD OF USE
7/30/2019	60% SUBMITTAL

FRASER SEIPLE ARCHITECTS
JOINT VENTURE
BLACK & VEATCH
FILANC

CITY OF MORRO BAY
MORRO BAY WATER
RECLAMATION FACILITY (WRF)

MAINTENANCE BUILDING
ARCHITECTURAL
WALL SECTIONS

DESIGNED: BDF
DETAILED: ANH
CHECKED: -
APPROVED: -
DATE:

0 1/2 1
IF THIS BAR DOES NOT MEASURE 1" THEN DRAWING IS NOT TO FULL SCALE

PROJECT NO.
400530

96-A-302
SHEET
OF

PLOTTED: 7/29/2019 8:29:55 PM
D400530

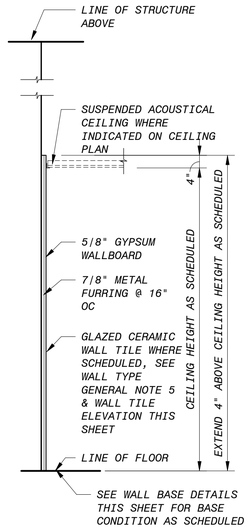

A WALL TYPE

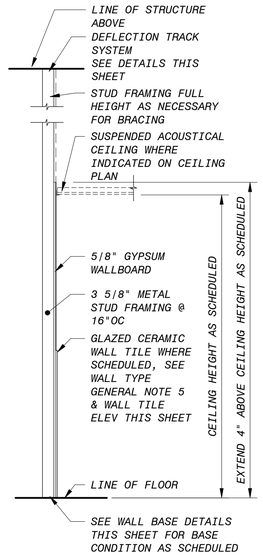

B WALL TYPE

B1 EXTEND FULL HEIGHT TO UNDERSIDE OF STRUCTURE

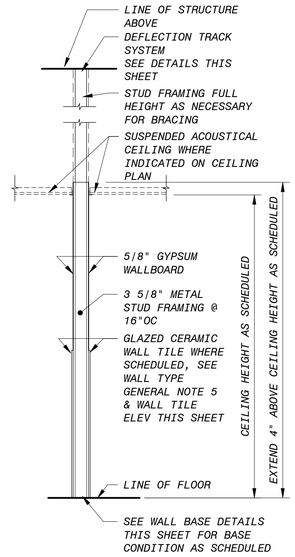

C WALL TYPE

C1 EXTEND STUD FRAMING & GWB BOTH SIDES FULL HEIGHT TO UNDERSIDE OF STRUCTURE

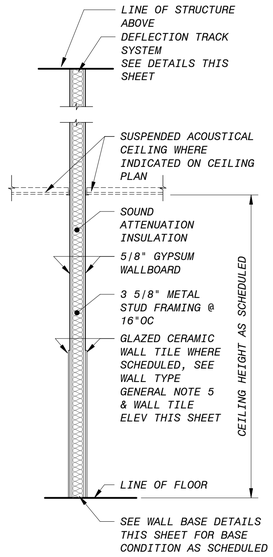

D WALL TYPE

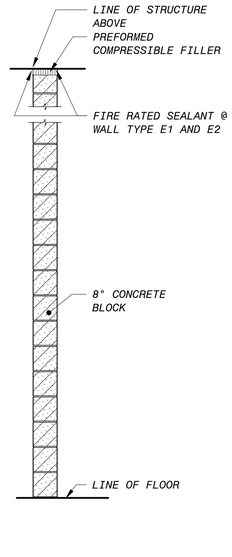

E WALL TYPE

E1 1 HOUR FIRE RATED CONSTRUCTION

E2 2 HOUR FIRE RATED CONSTRUCTION

1 WALL TYPES

1/2" = 1'-0"

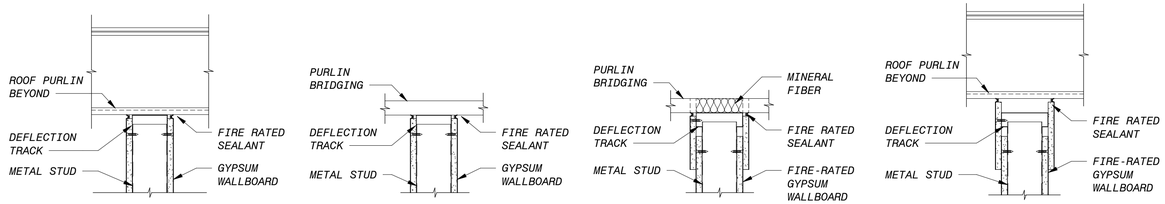

2 DEFLECTION TRACK SYSTEM

1 1/2" = 1'-0"

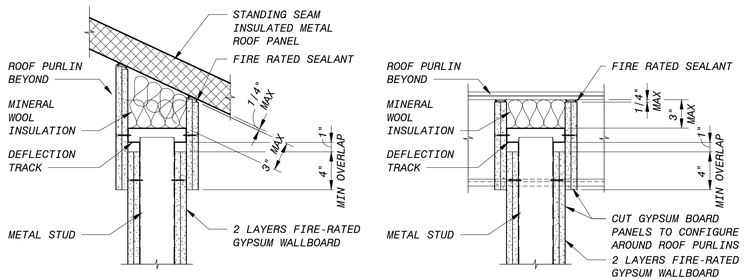

3 DEFLECTION TRACK SYSTEM

1 1/2" = 1'-0"

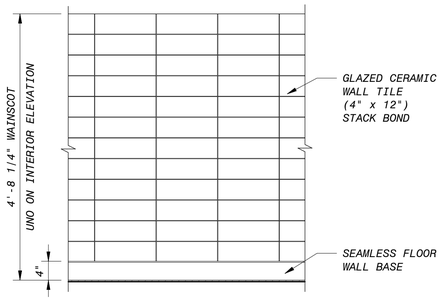

4 WALL TILE ELEVATION

3/4" = 1'-0"

GENERAL SHEET NOTES

WALL TYPES NOTES

1. SEE ROOM FINISH SCHEDULE FOR WALL FINISHES AND CEILING HEIGHTS.
2. SEE FLOOR PLANS FOR FIRE RATED WALL LOCATIONS AND HOURLY RATED REQUIREMENTS.
3. PROVIDE ACOUSTICAL SEALANT AT WALL TYPES INDICATED TO RECEIVE SOUND ATTENUATION INSULATION.
4. PROVIDE FIRE STOPPING AND FIRE RATED SEALANT AS REQUIRED FOR ASSEMBLY INDICATED AT FIRE RATED WALLS.
5. PROVIDE CEMENT BACKER BOARD WHERE INDICATED IN LIEU OF GYPSUM WALLBOARD WHERE WALL IS SCHEDULED TO RECEIVE CERAMIC TILE FINISH, UNLESS NOTED OTHERWISE FOR SPECIFIC WALL TYPE.
6. SEE STRUCTURAL DRAWINGS FOR TOP AND BOTTOM OF WALL CONDITIONS.
7. SEE SPECIFICATION SECTION 04200 FOR JOINT REINFORCING.
8. SEE STRUCTURAL DRAWINGS FOR TOP AND BOTTOM OF WALL CONDITION AT CMU WALLS.

NO.	BY	CHK	APP
B	BDF	BDF	EVB

DATE	REVISIONS AND RECORD OF USE
7/30/2019	60% SUBMITTAL

FRASER SEIPLE ARCHITECTS
JOINT VENTURE
BLACK & VEATCH
FILANC

CITY OF MORRO BAY
MORRO BAY WATER
RECLAMATION FACILITY (WRF)

MAINTENANCE BUILDING
ARCHITECTURAL
WALL TYPES AND CONNECTION DETAILS

12" 9" 6" 3" 0' 1'
1 1/2" = 1'-0"

12" 6" 0' 1' 2' 3'
3/4" = 1'-0"

12' 6' 0' 1' 2' 3' 4' 5'
1/2" = 1'-0"

0 1/2 1
IF THIS BAR DOES NOT MEASURE 1" THEN DRAWING IS NOT TO FULL SCALE

DESIGNED: BDF
DETAILED: ANH
CHECKED: -
APPROVED: -
DATE:

PROJECT NO.
400530

96-A-303
SHEET
OF

60% SUBMITTAL - NOT FOR CONTRUCTION

PLOTTED: 7/29/2019 8:29:56 PM
D400530

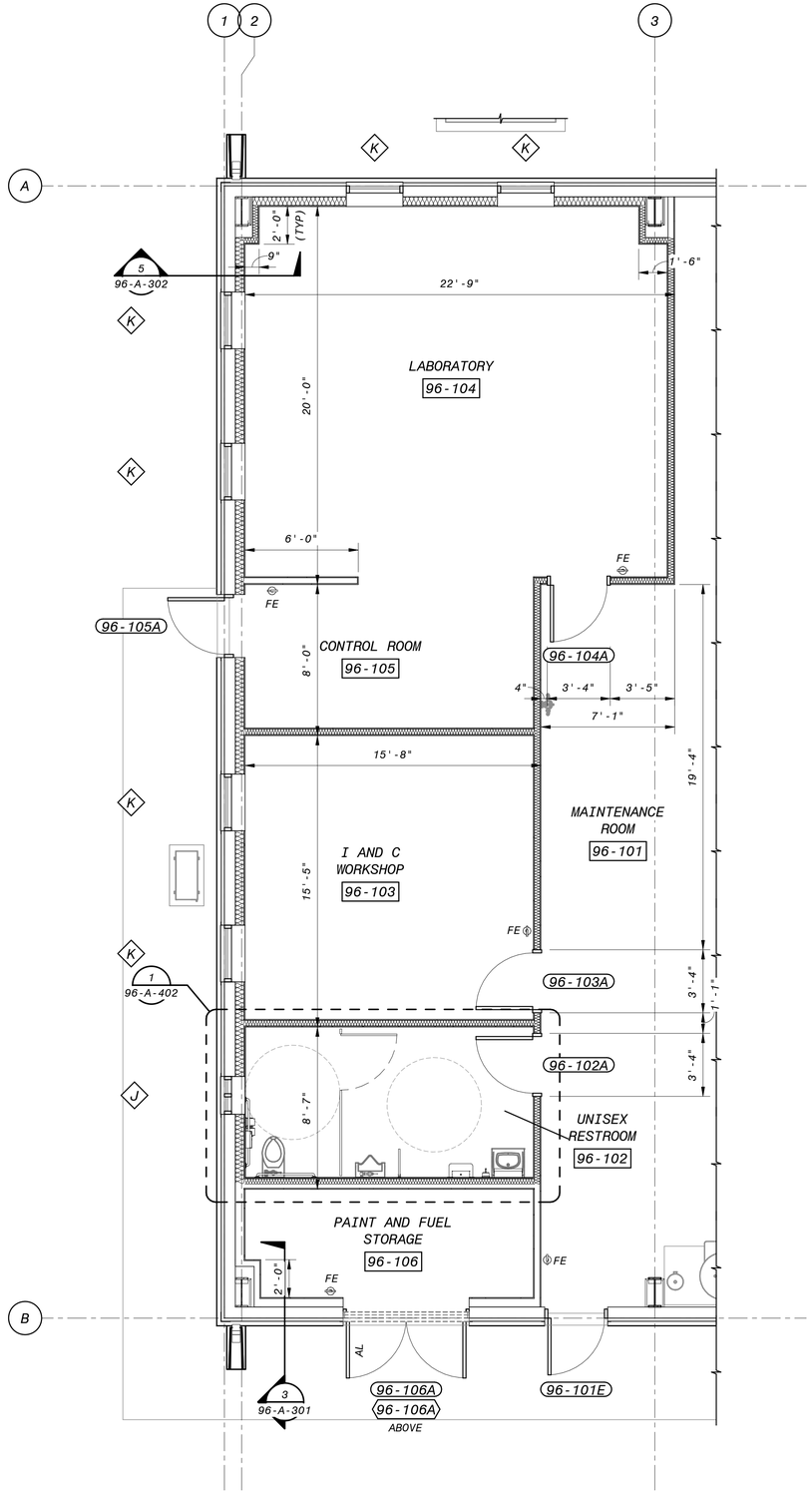

1 ENLARGED - OPERATING FLOOR PLAN
96-A-102 1/4" = 1'-0"

GENERAL SHEET NOTES

SHEET KEYNOTES

NO.	BY	CHK	APP
B	BDF	EVB	

60% SUBMITTAL — REVISIONS AND RECORD OF USE — BDF — 7/30/2019

FRASER SEIPLE ARCHITECTS
JOINT VENTURE
BLACK & VEATCH
FILANC

CITY OF MORRO BAY
MORRO BAY WATER
RECLAMATION FACILITY (WRF)

MAINTENANCE BUILDING
ARCHITECTURAL
INTERMEDIATE FLOOR PLAN

DESIGNED: BDF
DETAILED: ANH
CHECKED: -
APPROVED: -
DATE:

0 1/2 1
IF THIS BAR DOES NOT MEASURE 1" THEN DRAWING IS NOT TO FULL SCALE

PROJECT NO. 400530

96-A-401
SHEET OF

6" 4' 2' 0' 5' 10'
3/16" = 1'-0"

60% SUBMITTAL - NOT FOR CONTRUCTION

PLOTTED: 7/29/2019 8:29:58 PM
D400530

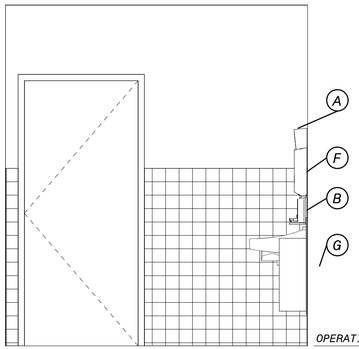

A UNISEX RESTROOM ELEVATION - EAST
96-A-402 1/2" = 1'-0"

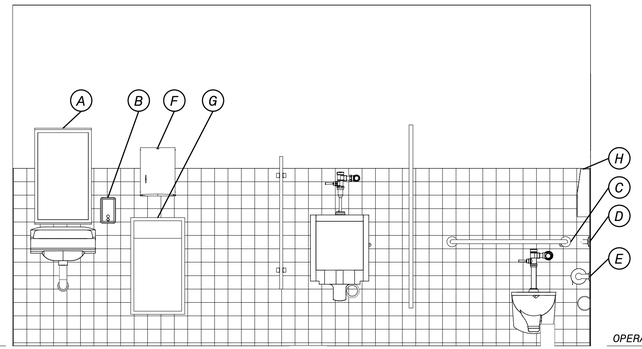

B UNISEX RESTROOM ELEVATION - SOUTH
96-A-402 1/2" = 1'-0"

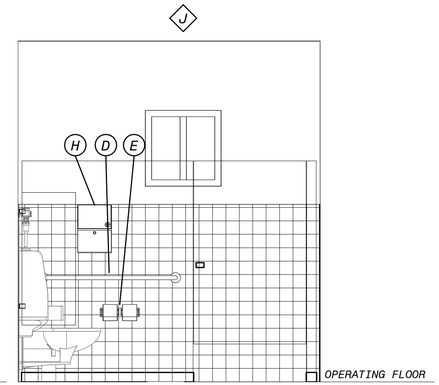

C UNISEX RESTROOM ELEVATION - WEST
96-A-402 1/2" = 1'-0"

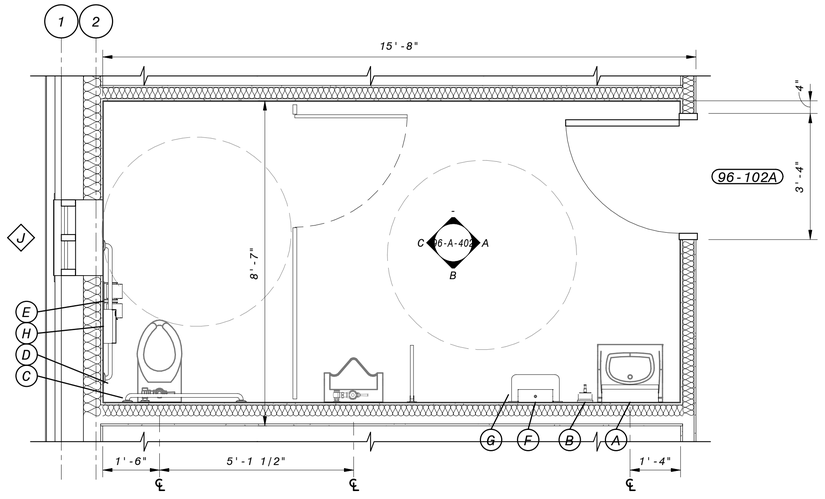

1 ENLARGED - UNISEX RESTROOM PLAN
96-A-401 1/2" = 1'-0"

ACCESSORY SCHEDULE

QTY	TYPE	DESCRIPTION	MOUNTING HEIGHT
1	A	FIXED TILT MIRROR, WITH SHELF, XX by XX inches	
1	B	SOAP DISPENSER	
1	C	36" GRAB BAR	
1	D	42" GRAB BAR	
1	E	Toilet Tissue Dispenser	
1	F	TOWEL DISPENSER	
1	G	WASTE RECEPTACLE, 18 GALLON, RECESSED	
1	H	NAPKIN DISPOSAL, 1.5 GALLONS, SURFACE-MOUNTED	

GENERAL SHEET NOTES

SHEET KEYNOTES

4' 2' 0' 4' 8'
1/4" = 1'-0"

60% SUBMITTAL - NOT FOR CONTRUCTION

NO.	BY	CHK	APP	DATE	REVISIONS AND RECORD OF USE
B	BDF	BDF	EVB	7/30/2019	60% SUBMITTAL

FRASER SEIPLE ARCHITECTS
JOINT VENTURE
BLACK & VEATCH
FILANC

CITY OF MORRO BAY
MORRO BAY WATER
RECLAMATION FACILITY (WRF)

MAINTENANCE BUILDING
ARCHITECTURAL
ENLARGED INTERMEDIATE FLOOR PLAN

DESIGNED: BDF
DETAILED: ANH
CHECKED: -
APPROVED: -
DATE:

0 1/2 1
IF THIS BAR DOES NOT MEASURE 1" THEN DRAWING IS NOT TO FULL SCALE

PROJECT NO.
400530

96-A-402
SHEET
OF

PLOTTED: 7/29/2019 8:30:01 PM
D400530

GENERAL ABBREVIATIONS

A	
A	ALARM, COMPRESSED AIR OUTLET
AC	AIR COMPRESSOR
AD	ACCESS DOOR, AIR DRYER
AFD	ADJUSTABLE FREQUENCY DRIVE
AFF	ABOVE FINISH FLOOR
ALUM	ALUMINUM
AP	ACCESS PANEL
APPROX	APPROXIMATE
AR	AIR RECEIVER
AUTO	AUTOMATIC
AVG	AVERAGE
AVS	AUTOMATIC VALVE STATION
B	
BF	BLIND FLANGE
BFF	BELOW FINISH FLOOR
BFP	BACKFLOW PREVENTER
BLDG	BUILDING
BOT	BOTTOM
BTUH	BRITISH THERMAL UNITS PER HOUR
BU	BELL-UP
BV	BALL VALVE
C	
C	CHANNEL
CENTR	CENTRIFUGAL
CF	CABINET FAN
C/L	CENTERLINE
CO	CLEANOUT
CONC	CONCRETE
CONN	CONNECTION
CONT	CONTINUATION
CP	CIRCULATING PUMP
CS	CONTROL STATION
CV	CHECK VALVE, CONTROL VALVE
CWW	CLEAR WATER WASTE
D	
D	DIRECT DRIVE
DEH	DEHUMIDIFIER
DF	DRINKING FOUNTAIN
DIA	DIAMETER
DN	DOWN
DSN	DOWNSPOUT NOZZLE

E	
E	ELECTRIC
EA	EACH
EEW	EMERGENCY EYE WASH
EFF	EFFICIENCY
EL	ELEVATION
EP	EXPLOSION PROOF
EQUIP	EQUIPMENT
ES	EMERGENCY SHOWER
ES/EEW	EMERGENCY SHOWER AND EYEWASH
ET	EXPANSION TANK
EWC	ELECTRIC WATER COOLER
EWH	ELECTRIC WATER HEATER
EWT	ENTERING WATER TEMPERATURE
EXIST	EXISTING
F	
F	DEGREES FAHRENHEIT
FCO	FLOOR CLEANOUT
FD	FLOOR DRAIN
FDB	DEGREES FAHRENHEIT DRY BULB
FLEX	FLEXIBLE
FM	FLOW METER
FPM	FEET PER MINUTE
FR	FUNNEL RECEPTOR
FS	FLOOR SINK, FLOW SWITCH
FSW	FILTER SURFACE WASH
FT	FEET
G	
G	GAS OUTLET
GA	GAUGE
GALV	GALVANIZED
GCO	GRADE CLEANOUT
GD	GARBAGE DISPOSER
GIH	GAS INFRARED HEATER
GPM	GALLONS PER MINUTE
GUH	GAS UNIT HEATER
GV	GATE VALVE
GW	GLASS WASHER
GWH	GAS WATER HEATER
H	
H	HAND OPERATOR, HEIGHT, HORIZONTAL
HE	HEAT EXCHANGER, HELIUM
HF	HOSE FAUCET
HO	HAND-OFF
HOA	HAND-OFF-AUTO
HP	HORSEPOWER
HR	HOUR, HOSE REEL
HUM	HUMIDIFIER
HV	HOSE VALVE
HWB	HEATING WATER BOILER
HZ	HERTZ

I	
I	INTAKE
ID	INSIDE DIAMETER
IN	INCHES
INV	INVERT
J	
JS	JANITOR'S SINK
K	
KS	KITCHEN SINK
KW	KILOWATT
L	
LAV	LAVATORY
LBS	POUNDS
LI	LEVEL INDICATOR
LS	LABORATORY SINK, LEVEL SWITCH
LWT	LEAVING WATER TEMPERATUREMAU MAKEUP AIR UNIT
M	
MAX	MAXIMUM
MCA	MINIMUM CIRCUIT AMPS
MFR	MANUFACTURER
MIN	MINIMUM
MOD	MODULATING
MS	MOP SINK
N	
NC	NORMALLY CLOSED
NO	NORMALLY OPEN, NUMBER
NPSHR	NET POSITIVE SUCTION HEAD REQUIRED
NT	NEUTRALIZATION TANK
O	
OD	OUTSIDE DIAMETER
ORD	OVERFLOW ROOF DRAIN
P	
PD	PRESSURE DROP (FEET OF WATER)
PAC	PACKAGED AIR CONDITIONING UNIT
PDI	PLUMBING AND DRAINAGE INSTITUTE
PDS	PRESSURE DIFFERENTIAL SWITCH
PL	PLATE
POS	POSITION
PPM	PARTS PER MILLION
PRS	PRESSURE REDUCING STATION
PRV	PRESSURE REDUCING VALVE
PS	PRESSURE SWITCH
PSI	POUNDS PER SQUARE INCH
PSIA	POUNDS PER SQUARE INCH ABSOLUTE
PSIG	POUNDS PER SQUARE INCH GAUGE

R	
RCS	REMOTE CONTROL STATION
RD	ROOF DRAIN
REQD	REQUIRED
S	
SF	SQUARE FEET, SUPPLY FAN
SH	SHEET, SHOWER
SIM	SIMILAR
SS	STAINLESS STEEL
SSK	SERVICE SINK
SSP	SUBMERSIBLE SUMP PUMP
STD	STANDARD
SV	SERVICE VALVE, SHUTOFF VALVE, SUPPLY VALVE, SOLENOID VALVE
T	
TD	TRENCH DRAIN
TP	TRAP PRIMER
TS	TAMPER SWITCH
TYP	TYPICAL
U	
UR	URINAL
V	
V	VERTICAL
VAC	VACUUM OUTLET
VB	VACUUM BREAKER
VCD	VOLUME CONTROL DAMPER
VF	VANEAXIAL FAN
VP	VACUUM PUMP
VSP	VERTICAL COLUMN SUMP PUMP
VTR	VENT THRU ROOF
W	
W	WIDE FLANGE, WIDTH
WBP	WATER BOOSTER PUMP
WC	WATER CLOSET, WATER COLUMN
WCO	WALL CLEANOUT
WG	WATER GAUGE
WH	WALL HYDRANT
WHA	WATER HAMMER ARRESTOR
WM	WALL MOUNTED
WST	WATER STORAGE TANK
WT	WEIGHT

SYSTEM ABBREVIATIONS

WATER	
NPW	COLD WATER (NON-POTABLE)
CW	COLD WATER
DE	DEIONIZED WATER
DW	DISTILLED WATER
F	FIRE PROTECTION WATER
HWC	HOT WATER CIRCULATING (POTABLE)
NPHW	HOT WATER (NON-POTABLE)
HW	HOT WATER (POTABLE)
PEW	PLANT EFFLUENT WATER
PW	POTABLE COLD WATER
SW	SOFTENED WATER
TNPW	TEMPERED NON-POTABLE WATER
TW	TEMPERED OR BLENDED WATER

WASTE	
CRV	CHEMICAL RESISTANT VENT
CRW	CHEMICAL RESISTANT WASTE
CWW	CLEAR WATER WASTE
D	INDIRECT DRAIN
PD	SUMP PUMP DISCHARGE
SAN	SANITARY DRAIN
ST	STORM DRAIN
V	VENT
FUEL GAS	
NG	NATURAL GAS
PG	PROPANE GAS

SPECIAL	
A	COMPRESSED AIR
ACET	ACETYLENE
AR	ARGON
H	HYDROGEN
HE	HELIUM
ME	METHANE
N	NITROGEN
NO	NITROUS OXIDE
OX	OXYGEN
VAC	VACUUM

SCHEMATIC FITTINGS

- BLIND FLANGE
- CAP
- REDUCER
- SLEEVE
- TP — TEST PLUG
- UNION
- P-TRAP
- VENT THROUGH ROOF (VTR)

VALVE LEGEND

PLAN / SECTION

- ANGLE VALVE
- BACKFLOW PREVENTER W/ STRAINER (2" AND SMALLER)
- BACKFLOW PREVENTER
- BACKWATER VALVE
- BALL VALVE
- BUTTERFLY VALVE
- CHECK VALVE
- GATE VALVE
- GLOBE VALVE
- PLUG VALVE
- PRESSURE REDUCING VALVE
- THREE WAY VALVE

PIPING ACCESSORIES LEGEND

- FLEXIBLE CONNECTION
- HF — HOSE FAUCET W/O VACUUM BREAKER
- HFVB — HOSE FAUCET W/ VACUUM BREAKER
- HV — HOSE VALVE W/ HOSE NIPPLE
- PRS — PRESSURE REDUCING STATION
- PRESSURE RELIEF VALVE
- T — PRESSURE / TEMPERATURE RELIEF VALVE
- Q — QUICK COUPLING
- WH — WALL HYDRANT W/ VACUUM BREAKER
- METER
- WYE STRAINER
- WYE STRAINER W/ BLOWOFF
- VACUUM BREAKER

PIPING LEGEND

- PIPING ABOVE FLOOR OR GRADE
- PIPING BELOW FLOOR OR GRADE
- PIPE TURNING UP
- PIPE TURNING DOWN

PIPE FITTINGS LEGEND

- BLIND FLANGE
- CAP
- REDUCER
- SLEEVE
- TP — TEST PLUG
- UNION
- P-TRAP
- VTR

PLUMBING LEGEND

- BELL-UP DRAIN OR FUNNEL RECEPTOR W/ TRAP
- CLEANOUT (FLOOR)
- CLEANOUT (PIPE)
- BLENDING VALVE
- DOWNSPOUT NOZZLE
- EMERGENCY SHOWER / EYEWASH
- FLOOR DRAIN
- HOSE RACK
- HOSE REEL
- ROOF DRAIN
- SHOWER
- SPLASH BLOCK
- WATER HAMMER ARRESTOR W/ PDI SIZE DESIGNATION

GENERAL PLUMBING NOTES

1. THIS IS GENERAL LEGEND AND ABBREVIATION SHEET FOR THE PLUMBING DRAWINGS. SOME ITEMS CONTAINED ON THIS SHEET MAY NOT BE USED ON THIS SPECIFIC PROJECT.
2. ALL MECHANICAL PLUMBING WORK SHALL BE IN ACCORDANCE WITH THE FOLLOWING APPLICABLE CODES:
   - 2016 CALIFORNIA BUILDING CODE
   - 2016 CALIFORNIA FIRE PROTECTION CODE
   - 2015 CALIFORNIA FUEL GAS CODE
   - 2016 CALIFORNIA PLUMBING BUILDING CODE
   - 2016 CALIFORNIA ENERGY CODE
3. FOR ROOFTOP EQUIPMENT CURBS, FLUES, AND FLASHING DETAILS, SEE ARCHITECTURAL DRAWINGS.
4. SEE ARCHITECTURAL AND STRUCTURAL DRAWINGS FOR ALL EQUIPMENT BASE DETAILS.
5. "SCREENED" DELINEATION DENOTES EXISTING AND NEW FACILITIES AND IS FOR REFERENCE ONLY. "LIGHT" LINE DELINEATION DEMOTES EXISTING MECHANICAL EQUIPMENT AND SYSTEMS. EXISTING FACILITY AND MECHANICAL SYSTEMS INFORMATION WAS TAKEN FROM PREVIOUS DRAWINGS, CONSTRUCTION RECORDS, DATA, AND FIELD SURVEY INFORMATION. ACTUAL LOCATION, ARRANGEMENT, AND DIMENSIONS SHALL BE FIELD VERIFIED AND WORK INSTALLED TO MEET ACTUAL CONDITIONS AND LOCATIONS ENCOUNTERED. "BOLD" (DARK) DELINEATION IS NEW WORK TO BE CONSTRUCTED UNDER THIS CONTRACT.
6. ALL PIPE PENETRATIONS THROUGH FIRE RESISTANCE RATED ASSEMBLIES SHALL BE PROVIDED WITH FIRESTOP SYSTEMS, EQUIPMENT AND ACCESSORIES TO RESIST THE PASSAGE OF FIRE, SMOKE AND OTHER GASES. THE ORIGINAL FIRE RESISTANCE RATING OF THE ASSEMBLY PENETRATED SHALL BE MAINTAINED FOR ALL TYPES OF PENETRATIONS. SEE ARCHITECTURAL DRAWINGS FOR RATED ASSEMBLY LOCATIONS.
7. METAL ROOF DECKING OR BOTTOM CHORD OF BAR JOISTS SHALL NOT BE USED FOR THE SUPPORT OF EQUIPMENT OR PIPING.
8. ALL HANGERS, BRACKETS, OR BRACES FOR EQUIPMENT AND PIPING ARE NOT INDICATED ON THE DRAWINGS. REFER TO THE SPECIFICATIONS FOR SUPPORT REQUIREMENTS NOT SHOWN ON THE PLANS.
9. ALL EQUIPMENT AND PIPING FINAL LOCATIONS SHALL BE COORDINATED TO AVOID INTERFERENCES WITH STRUCTURE, OTHER PIPING, EQUIPMENT, DUCTWORK, AND CONDUIT. UNLESS SPECIFICALLY DIMENSIONED, THE PIPE ROUTING SHOWN IS INTENDED TO INDICATE GENERAL LOCATION ONLY.
10. ALL PIPING SHALL BE ROUTED AS HIGH AS POSSIBLE WITH A MINIMUM HEIGHT OF 8'-0" ABOVE THE WALKING SURFACE UNLESS OTHERWISE INDICATED BY A CENTERLINE OR INVERT ELEVATION.
11. PIPING INSTALLED ABOVE SUSPENDED CEILINGS SHALL BE INSTALLED TO ALLOW A MINIMUM 8'-0" INCH CLEARANCE BETWEEN THE CEILING AND PIPING.
12. ALL HOSE FAUCETS AND HOSE VALVES SHALL BE INSTALLED 3'-0" ABOVE FINISHED FLOOR UNLESS OTHERWISE NOTED. WALL HYDRANTS SHALL BE INSTALLED 2'-0" ABOVE GRADE UNLESS OTHERWISE NOTED.
13. ALL HOSE FAUCETS AND WALL HYDRANTS SHALL BE NOMINAL 3/4" PIPE SIZE UNLESS OTHERWISE NOTED. ALL HOSE VALVES SHALL BE 1 1/2" NOMINAL PIPE SIZE UNLESS OTHERWISE NOTED.
14. ALL HOSE FAUCETS, WALL HYDRANTS, AND OTHER OUTLETS ON NON-POTABLE WATER LINES WHICH COULD BE USED FOR DRINKING OR DOMESTIC USE SHALL BE POSTED AS REQUIRED BY THE APPLICABLE CODES. IN ABSENCE OF A CODE REQUIREMENT, THE OUTLETS SHALL BE POSTED WITH A TAG IN THE SHAPE OF A 4" EQUILATERAL TRIANGLE BEARING THE LEGEND "DANGER: UNSAFE WATER" IN LETTERS NOT LESS THAN 1/2" IN HEIGHT. THIS TAG SHALL BE SECURELY ATTACHED IN A VISIBLE LOCATION DIRECTLY ABOVE OUTLET. THE TAG SHALL BE PAINTED ORANGE AND THE LETTERS BLACK.
15. ALL RELIEF VALVES SHALL BE PIPED TO FLOOR OR BELL-UP DRAINS.
16. SEISMIC RESTRAINTS/BRACING SHALL BE PROVIDED FOR ALL EQUIPMENT, PIPING AND ACCESSORIES IN ACCORDANCE WITH THE LATEST SMACNA SEISMIC RESTRAINT MANUAL AND LOCAL BUILDING CODES. CONTRACTOR SHALL BE RESPONSIBLE FOR ALL SEISMIC SUPPORTS AND ADDITIONAL/MISCELLANEOUS STEEL REQUIRED FOR PROPER INSTALLATION OF SUPPORTS. SUPPORTS AND SEISMIC RESTRAINTS DESIGN SUBMITTALS SHALL BEAR THE STAMP AND SIGNATURE OF AN ENGINEER LICENSED IN STATE OF CALIFORNIA.
17. INSULATION SHALL BE PROVIDED FOR EQUIPMENT AND PIPING SYSTEMS AS INDICATED IN THE SPECIFICATIONS.
18. PLUMBING VENTS OUTLETS SHALL BE LOCATED A MINIMUM OF 10' AWAY FROM ANY OUTSIDE AIR INLET.
19. PIPING SIZES TO EQUIPMENT AND EQUIPMENT SUPPORTS SHALL BE VERIFIED AND ADJUSTED TO MATCH ACTUAL EQUIPMENT FURNISHED.
20. ALL MATERIALS, FITTINGS, COVERS, AND EQUIPMENT INSTALLED IN RETURN AIR PLENUMS SHALL BE NONCOMBUSTIBLE AND UL LISTED FOR USE IN RETURN AIR PLENUMS.

SCHEMATIC VALVES

- ANGLE VALVE
- BACKFLOW PREVENTER W/STRAINER (2" AND SMALLER)
- BACKFLOW PREVENTER
- BACKWATER VALVE
- BALL VALVE
- BUTTERFLY VALVE
- CHECK VALVE
- GATE VALVE
- GLOBE VALVE
- PLUG VALVE
- PRESSURE REDUCING VALVE
- THREE WAY VALVE

PLUMBING SCHEMATICS

- BELL-UP DRAIN OR FUNNEL RECEPTOR W/ TRAP
- FCO — CLEANOUT (FLOOR)
- CO — CLEANOUT (PIPE)
- HW / CW — BLENDING VALVE
- DOWNSPOUT NOZZLE OR SHOWER
- EMERGENCY SHOWER/EYEWASH
- FLOOR DRAIN
- P-TRAP
- ROOF DRAIN
- SPLASHBLOCK
- A — WATER HAMMER ARRESTOR W/ PDI SIZE DESIGNATION

SCHEMATICS SPECALTIES

- AUTOMATIC VALVE STATION
- S — BASKET STRAINER
- COMBINATION PUMP DISCHARGE VALVE
- FLEXIBLE CONNECTION
- FLOW CONTROL VALVE
- FLOW SENSOR METER
- HF — HOSE FAUCET
- HF — HOSE FAUCET W/ VACUUM BREAKER
- HOSE VALVE W/ HOSE NIPPLE
- AIR VENT
- PRS — PRESSURE REDUCING STATION
- PRESSURE RELIEF VALVE
- PRESSURE/TEMPERATURE RELIEF VALVE
- Q — QUICK COUPLING
- ROTAMETER
- SIGHT FLOW INDICATOR
- SUCTION DIFFUSER (SCHEMATIC)
- TP — TRAP PRIMER
- WH — WALL HYDRANT W/ VACUUM BREAKER
- M — METER
- S — WYE STRAINER
- S — WYE STRAINER W/ BLOWOFF
- VACUUM BREAKER

SCHEMATICS

- AIR-GAP FITTING
- BELL-UP DRAIN OR FUNNEL RECEPTOR
- FLOOR CLEANOUT
- FLOOR DRAIN
- FLOOR DRAIN W/ FUNNEL

CONTROLS AND INSTRUMENTATION

- FS — FLOW SWITCH
- GAUGE ACTIVATOR/ISOLATOR
- LS — LEVEL SWITCH
- P — PRESSURE GAUGE W/ SHUTOFF VALVE
- S — SOLENOID OPERATOR
- THERMOMETER - DIAL TYPE
- THERMOMETER - STEM TYPE
- V — VACUUM GAUGE W/ SHUTOFF VALVE

60% SUBMITTAL - NOT FOR CONSTRUCTION

NO.	BY	CHK	APP	DATE	REVISIONS AND RECORD OF USE
B	MDS	RWC	AEC	7/30/2019	60% SUBMITTAL

BLACK & VEATCH
JOINT VENTURE
BLACK & VEATCH
FILANC

CITY OF MORRO BAY
MORRO BAY WRF
RECLAMATION FACILITY (WRF)

PLUMBING
LEGEND, ABBREVIATIONS AND GENERAL NOTES

DESIGNED: SM
DETAILED: MDS
CHECKED: AEC
APPROVED:
DATE: 7/30/2019

0 1/2 1
IF THIS BAR DOES NOT MEASURE 1" THEN DRAWING IS NOT TO FULL SCALE

PROJECT NO.
400530

00-P-001
SHEET
OF

PLOTTED: 7/30/2019 2:50:44 PM
D400530

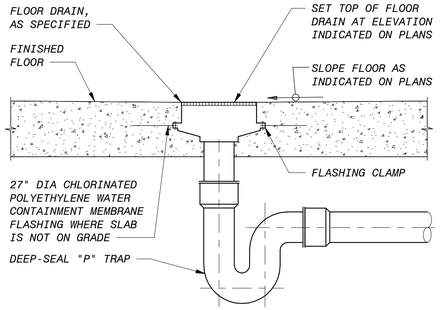

A FLOOR DRAIN - NEW FLOOR

NO SCALE

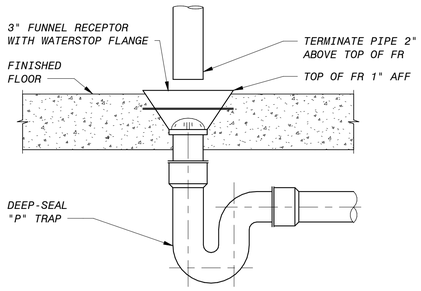

B FUNNEL DRAIN - NEW FLOOR

NO SCALE

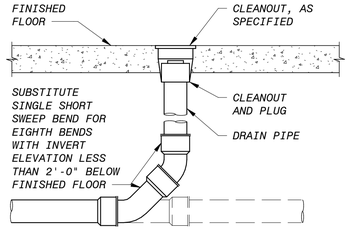

C FLOOR CLEANOUT - NEW FLOOR

NO SCALE

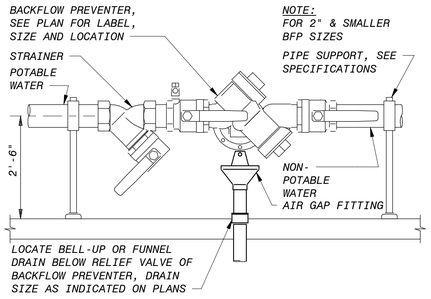

D BACKFLOW PREVENTER

NO SCALE

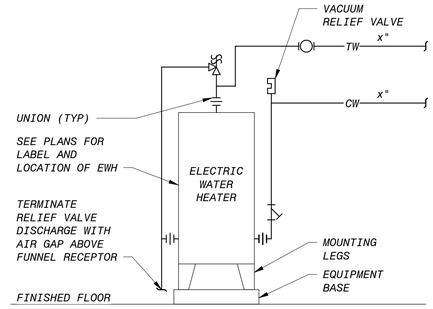

E INSTANTANEOUS - WATER HEATER

NO SCALE

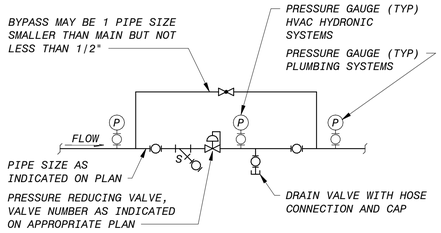

NOTES:
1. PROVIDE REDUCING FITTINGS AT PRESSURE REDUCING VALVE AND ON BYPASS AS REQUIRED.
2. PROVIDE VALVES PER SPECIFICATIONS.

F PRESSURE REDUCING STATION

NO SCALE

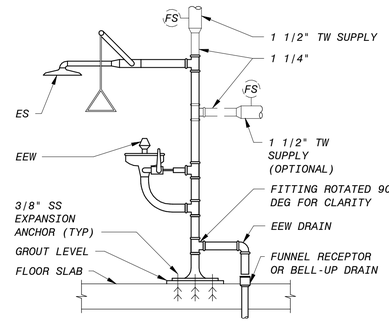

G EMERGENCY SHOWER AND EYE WASH

NO SCALE

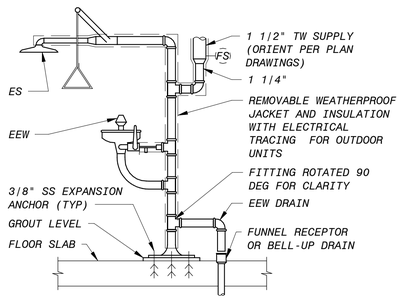

H EMERGENCY SHOWER AND EYE WASH

NO SCALE

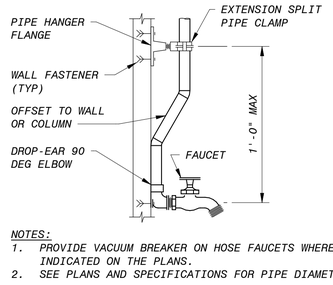

NOTES:
1. PROVIDE VACUUM BREAKER ON HOSE FAUCETS WHERE INDICATED ON THE PLANS.
2. SEE PLANS AND SPECIFICATIONS FOR PIPE DIAMETERS.

J HOSE FAUCET PIPE MOUNTING

NO SCALE

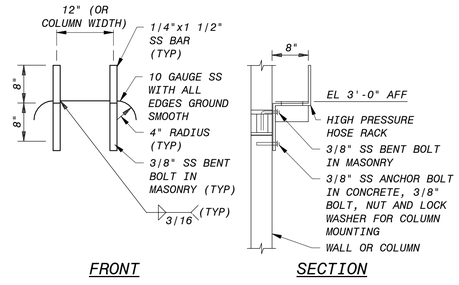

K WALL OR COLUMN MOUNTED HOSE RACK

NO SCALE

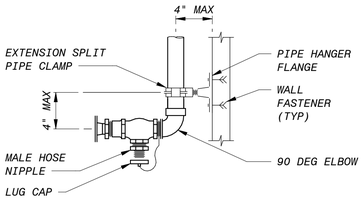

NOTES:
1. SEE PLANS AND SPECIFICATIONS FOR PIPE DIAMETERS.
2. LUG CAPS AND CHAINS SHALL BE PROVIDED ON HOSE VALVES LOCATED OUTDOORS.

L HOSE VALVE PIPE MOUNTING

NO SCALE

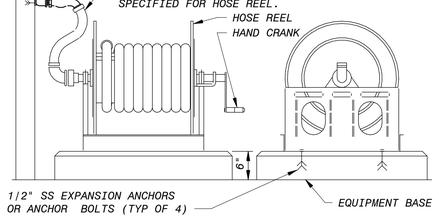

NOTE:
THE EXACT ORIENTATION OF WATER SUPPLY PIPE AND HOSE VALVE SHOULD BE AS REQUIRED TO SUIT THE SPECIFIC INSTALLATION.

M HOSE REEL

NO SCALE

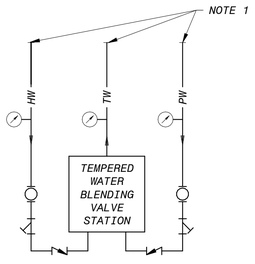

NOTE:
1. SEE PLANS FOR VARIES PIPE SIZES.

N ES/EEW WATER BLENDING VALVE

NO SCALE

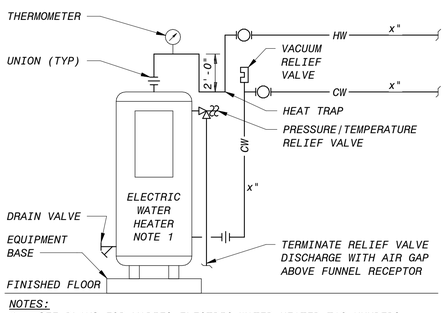

NOTES:
1. SEE PLANS FOR VARIES ELECTRIC WATER HEATER TAG NUMBERS.

P ELECTRIC WATER HEATER PIPING SCHEMATIC

NO SCALE

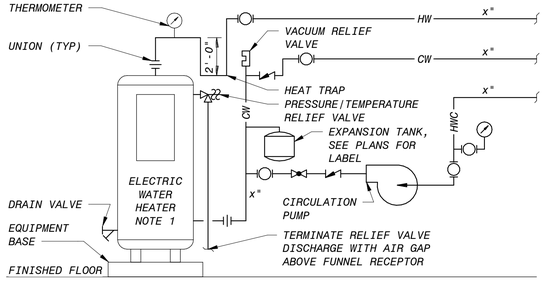

NOTES:
1. SEE PLANS FOR VARIES ELECTRIC WATER HEATER TAG NUMBERS.

Q ELECTRIC WATER HEATER PIPING SCHEMATIC

NO SCALE

60% SUBMITTAL - NOT FOR CONSTRUCTION

NO.	BY	CHK	APP	DATE	REVISIONS AND RECORD OF USE
B	MDS	RWC	AEC	7/30/2019	60% SUBMITTAL

BLACK & VEATCH
JOINT VENTURE
BLACK & VEATCH
FILANC

CITY OF MORRO BAY
MORRO BAY WRF
RECLAMATION FACILITY (WRF)

PLUMBING DETAILS

DESIGNED: SM
DETAILED: MDS
CHECKED: AEC
APPROVED:
DATE: 7/30/2019

0 1/2 1
IF THIS BAR DOES NOT MEASURE 1" THEN DRAWING IS NOT TO FULL SCALE

PROJECT NO.
400530

00-P-501
SHEET
OF

PLOTTED: 7/30/2019 1:18:27 PM
D400530

BACKFLOW PREVENTER SCHEDULE

UNIT NUMBER	SERVICE	BODY SIZE (IN)	MAXIMUM FLOW (GPM)	MAXIMUM PD (PSI)	MANUFACTURER / MODEL	NOTES
50-PLUM-BFP-0001	RO & UV BUILDING	1.0	60	13	WATTS/FEBCO LF860/1 LF860-QT RP	---
90-PLUM-BFP-0001	CHEMICAL BUILDING	1.5	120	13	WATTS/FEBCO LF860/1 1/2 LF860-QT RP	---
95-PLUM-BFP-0001	OPERATIONS BUILDING	1.0	60	13	WATTS/FEBCO LF860/1 LF860-QT RP	---
96-PLUM-BFP-0001	MAINTENANCE BUILDING	2.0	120	13	WATTS/FEBCO LF860/2 LF860-QT RP	---

PIPING ACCESSORIES SCHEDULE

UNIT NUMBER	DESCRIPTION	MANUFACTURER / MODEL	NOTES
FCO-1	HEAVY DUTY FLOOR CLEANOUT, SECURED ROUND ADJUSTABLE NICKEL BRONZE TOP.	SMITH 4111 SERIES	---
FD-1	MEDIUM DUTY CAST IRON FLOOR DRAIN, ADJUSTABLE TOP, LOOSE SET CAST IRON GRATE.	SMITH 2310 SERIES	---
FD-8	HEAVY DUTY CAST IRON FLOOR DRAIN, 12" DIAMETER TRACTOR GRATE.	SMITH 2141 SERIES	---
FR-1	MEDIUM DUTY CAST IRON FUNNEL RECEPTOR, WATERSTOP FLANGE, THREADED OR NO HUB CONNECTION.	SMITH 3800 SERIES	---
FS-1	CAST IRON FLOOR SINK, 8" DIAMETER TOP, DOME BOTTOM STRAINER.	SMITH 3030 SERIES	---

PLUMBING EQUIPMENT SCHEDULE0065

UNIT NUMBER	DESCRIPTION	MANUFACTURER	NOTES
50-PLUM-ET-0001	EXPANSION TANK, PIPELINE MOUNTED, 14 GALLON, PRECHARGE TO 80 PSIG.	AMTROL THERM-X-TROL ST-C SERIES	---
50-PLUM-EWH-0001	ELECTRIC WATER HEATER, INDUSTRIAL GRADE, 119 GALLONS STORAGE 2 NOS., 221 GPH RECOVERY AT 100 FRISE, 54 KW, 480 VOLT, 3 PHASE, 60 HZ.	STATE CSB 120 54 SFE	1
50-PLUM-TP-0001	ELECTRONIC TRAP PRIMING MANIFOLD, SURFACE MOUNTED, 3/4" NPT INLET, 1/2" TUBE CONNECTIONS, 120 VOLT, 1 PHASE, 60 HZ. SERVE FLOOR DRAIN IN RO/UV ROOM (22 CONNECTION)	PRECISION PLUMBING PRODUCTS, INC. PRIME-TIME PT-22	---
90-PLUM-EWH-0001	ELECTRIC WATER HEATER, TANKLESS WITH MOUNTING LEGS, 108 KW,480 VOLT, 3 PHASE, 60 HZ. OUTDOOR UNIT SHALL BE PROVIDED WITH FREEZE PROTECTION PACKAGE.	KELTECH SNA SERIES	1,3
95-PLUM-CP-0001	IN-LINE HOT WATER CIRCULATING PUMP, 1 GPM, 7 FEET HEAD, 120 VOLT, 1 PHASE, 60 HZ.	BELL & GOSSETT NBF-22	---
95-PLUM-ET-0001	EXPANSION TANK, PIPELINE MOUNTED, 14 GALLON, PRECHARGE TO 80 PSIG.	AMTROL THERM-X-TROL ST-C SERIES	---
95-PLUM-EWH-0001	ELECTRIC WATER HEATER, INDUSTRIAL GRADE, 119 GALLONS STORAGE, 123 GPH RECOVERY AT 100 F RISE, 30 KW, 480 VOLT, 3 PHASE, 60 HZ.	STATE CSB 120 30 SFE	1
95-PLUM-TP-0001	ELECTRONIC TRAP PRIMING MANIFOLD, SURFACE MOUNTED, 3/4" NPT INLET, 1/2" TUBE CONNECTIONS, 120 VOLT, 1 PHASE, 60 HZ. SERVE FLOOR DRAIN IN MENS LOCKER ROOM (12 CONNECTION)	PRECISION PLUMBING PRODUCTS, INC. PRIME-TIME PT-12	---
96-PLUM-ET-0001	EXPANSION TANK, PIPELINE MOUNTED, 8 GALLON, PRECHARGE TO 80 PSIG.	AMTROL THERM-X-TROL ST-C SERIES	---
96-PLUM-EWH-0001	ELECTRIC WATER HEATER, INDUSTRIAL GRADE, 119 GALLONS STORAGE, 111 GPH RECOVERY AT 100 F RISE, 27 KW, 480 VOLT, 3 PHASE, 60 HZ.	STATE CSB 120 27 SFE	1
96-PLUM-TP-0001	ELECTRONIC TRAP PRIMING MANIFOLD, SURFACE MOUNTED, 3/4" NPT INLET, 1/2" TUBE CONNECTIONS, 120 VOLT, 1 PHASE, 60 HZ. SERVE FLOOR DRAIN IN MAINTENANCE ROOM (12 CONNECTION)	PRECISION PLUMBING PRODUCTS, INC. PRIME-TIME PT-12	---
HR-1	HOSE REEL WITH 1 1/2" SWIVEL WATER SUPPLY AND 100 FEET TYPE 1 HOSE.	HANNAY 3528-25-26	---

PRESSURE REDUCING VALVE SCHEDULE

UNIT NUMBER	SERVICE	TYPE	FLOW RATE (GAS-SCFH)			REDUCED PRESSURE SETPOINT(IN WC)	INLET PRESSURE (IN WC)		MINIMUM PRESSURE AT MAXIMUM FLOW (IN WC)	NOTES
			MINIMUM	MAXIMUM	ORDINARY		MINIMUM	MAXIMUM		
50-PLUM-G-0001	UV/RO BUILDING	DIRECT ACTING	0	0	113	14	0	5	11	---
96-PLUM-G-0001	MAINTENANCE BUILDING	DIRECT ACTING	0	0	113	14	0	5	11	---

PLUMBING FIXTURE SCHEDULE

LABEL	DESCRIPTION	MANUFACTURER / MODEL	WATER		SANITARY		NOTES
			HOT	COLD	WASTE	VENT	
WC-1	WATER CLOSET, FLOOR MOUNT, FLUSH VALVE, 1.28 GALLON/FLUSH MAX.	AMERICAN STANDARD 3517A.101 RIGHT HEIGHT ELONGATED BOWL	---	1"	4"	2"	---
UR-1	URINAL, WALL MOUNT, FLUSH VALVE, 0.5 GALLON/FLUSH MAX.	AMERICAN STANDARD 6590.005 WASHBROOK FLOWISE	---	3/4"	2"	1 1/2"	---
L-1	LAVATORY, WALL HUNG 21"x18", WITH [1.5] [0.5] GPM AERATED FAUCET AND POP-UP DRAIN.	LAV: AMERICAN STANDARD 0355.012 LUCERNE FAUCET: AMERICAN STANDARD 7385.000 RELIANT 3	1/2"	1/2"	1 1/2"	1 1/2"	1
MS-1	MOP SINK, 24"x24", 12" DEEP, FLOOR MOUNTED, THREE SPLASH PANELS.	SINK: STERN-WILLIAMS HL-1810-BP3 FAUCET: AMERICAN STANDARD 8354.112	1/2"	1/2"	3"	2"	---
EWC-1	ELECTRIC WATER COOLER, WALL MOUNTED, 8 GPH, 120 VOLT, 1 PHASE, 60 HZ.	ELKAY EZS8	---	1/2"	1 1/2"	1 1/2"	1
S-1	SAMPLE SINK, 24"x24", FREE STANDING, 14" DEEP, 14 GAUGE STAINLESS STEEL, 2" DRAIN, 24" RIGHT & LEFT DRAIN BOARD, STAINLESS STEEL LEGS.	SINK: ELKAY WNSF8124 DRAIN: ELKAY LK25 RT	---	---	2"	2"	---
SS-1	SERVICE SINK, 24"x20", WALL MOUNTED,CAST IRON,SINGLE BOWL,BLANK BACK,WALL MOUNTED FAUCET FOR EXPOSED OVERHEAD SUPPLIES	SINK: AMERICAN STANDARD 7695.000 AKRON FAUCET: CHICAGO FAUCET 835	1/2"	1/2"	3"	1 1/2"	---
LS	LAB SINK, SEE LAB SPEC SECTION FOR DETAILS.	---	1/2"	1/2"	1 1/2"	1 1/2"	---
CS	CUP SINK, SEE LAB SPEC SECTION FOR DETAILS.	---	1/2"	1/2"	1 1/2"	1 1/2"	---
ES/EEW-1	EMERGENCY SHOWER/EYE/FACE WASH COMBINATION, PEDESTAL MOUNTED, 1 1/4" IPS SUPPLY.	HAWS 8300-8309	---	1 1/4"	---	---	2,3,4
ES/EEW-2	EMERGENCY SHOWER/EYE/FACE WASH COMBINATION, FROST-PROOF TO -30 F, PEDESTAL MOUNTED, 1 1/4" IPS SUPPLY, 120 VOLT. WITH FREEZE PROTECTION BLEED VALVE AND SCALD PROTECTION BLEED VALVE.	HAWS 8317 CTFP	---	1 1/4"	---	---	2,3,4

GENERAL SHEET NOTES

PLUMBING EQUIPMENT SCHEDULE:
ACCESSORIES: NONE

NOTES:
1 - SWITCH TO GAS HEATER IF NATURAL GAS IS AVAILABLE.
2 - PLAN TO COMBINE WATER HEATER FOR RO & UV BUILDING & CHEMICAL FACILTIY.
3 - CURRENTLY ON HOLD AWAITING FOR CONFIRMATION.

PLUMBING FIXTURE SCHEDULE:
ACCESSORIES: NONE

NOTES:
1 - FIXTURE AND INSTALLATION SHALL BE ADA COMPLIANT.
2 - TEMPERED WATER SUPPLY.
3 - LOCAL AND REMOTE ALARM SYSTEM.
4 - SCALD PROTECTION BLEED VALVE.

NO.	BY	CHK	APP'D	DATE	REVISIONS AND RECORD OF USE
B	MDS	RWC	AEC	7/30/2019	60% SUBMITTAL

BLACK & VEATCH
JOINT VENTURE
BLACK & VEATCH
FILANC

CITY OF MORRO BAY
MORRO BAY WRF
RECLAMATION FACILITY (WRF)

PLUMBING SCHEDULE

DESIGNED: SM
DETAILED: MDS
CHECKED: AEC
APPROVED:
DATE: 7/30/2019

0 1/2 1
IF THIS BAR DOES NOT MEASURE 1" THEN DRAWING IS NOT TO FULL SCALE

PROJECT NO. 400530

00-P-601
SHEET OF

60% SUBMITTAL - NOT FOR CONSTRUCTION

PLOTTED: 7/30/2019 1:18:27 PM
D400530

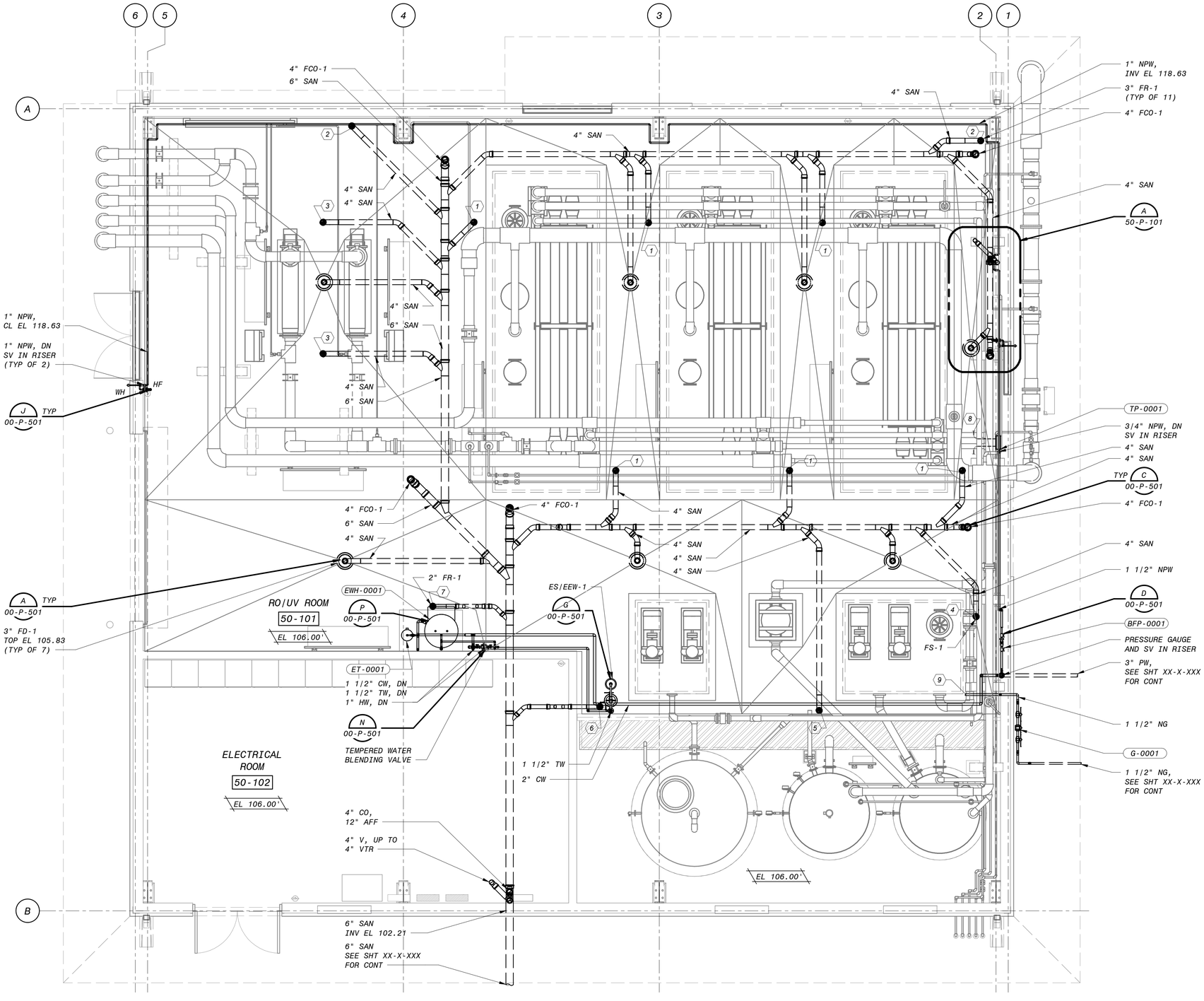

PLAN
1/4" = 1'-0"

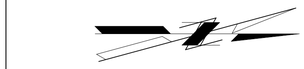

SHEET KEYNOTES

1. 3" FR FOR SKID EQUIPMENT DRAIN. FOR CONT SEE SHT 50-I-001.
2. 3" FR FOR ANALYZER PANEL DRAIN. FOR CONT SEE SHT 52-I-001.
3. 3" FR FOR UV EQUIPMENT DRAIN. FOR CONT SEE SHT 52-I-001.
4. 3" FS-1 FOR CIP CARTRIDGE FILTER DRAIN. FOR CONT SEE SHT 51-I-010.
5. 3" FR FOR NEUTRALIZATION TANK DRAIN. FOR CONT SEE SHT 51-I-011.
6. 3" FR FOR ES-EEW-1 DRAIN.
7. 2" FR FOR ELECTRICAL WATER HEATER DRAIN.
8. 1/2" TRAP PRIMER PIPING TO ALL FD AND FR.
9. 1 1/2" NG, CAPPED CONNECTION FOR FUTURE USE.

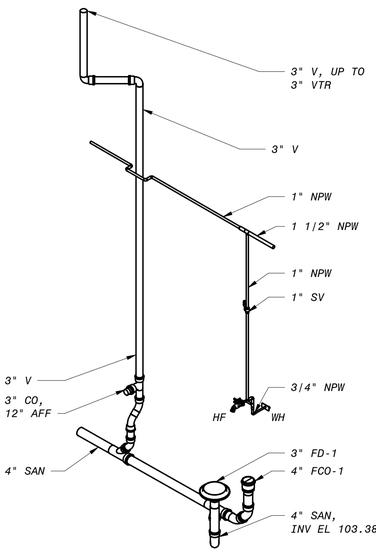

A ENLARGED ISOMETRIC
NO SCALE

4' 2' 0' 4' 8'
1/4" = 1'-0"

60% SUBMITTAL- NOT FOR CONSTRUCTION

NO.	BY	CHK	APP	DATE	REVISIONS AND RECORD OF USE
B	MDS	RWC	AEC	7/30/2019	60% SUBMITTAL

BLACK & VEATCH
JOINT VENTURE
BLACK & VEATCH
FILANC

CITY OF MORRO BAY
MORRO BAY WRF
RECLAMATION FACILITY (WRF)

RO/UV BUILDING
PLUMBING
PLAN

DESIGNED: SM
DETAILED: MDS
CHECKED: AEC
APPROVED:
DATE: 7/30/2019

0 1/2 1
IF THIS BAR DOES NOT MEASURE 1" THEN DRAWING IS NOT TO FULL SCALE

PROJECT NO.
400530

50-P-101
SHEET
OF

PLOTTED: 7/30/2019 1:25:18 PM
D400530

SHEET KEYNOTES

1. INSULATE AND HEAT TRACE EXPOSED LINE. REFERENCE SPEC 200511 AND 260511 FOR ADDITIONAL REQUIREMENTS.
2. ROUTE TW AND NPW LINE ON TOP OF CONTAINMENT WALL.

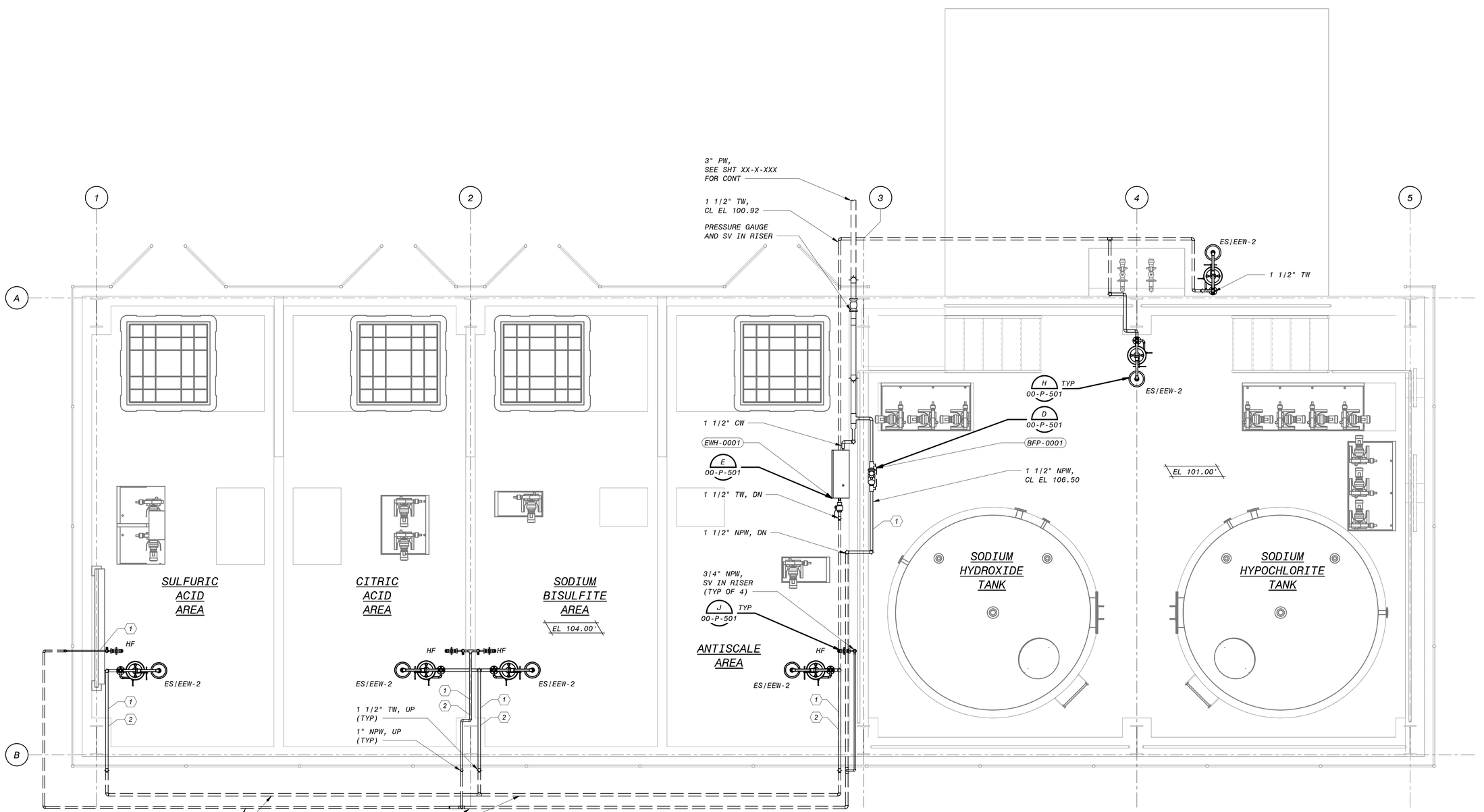

PLAN
3/8" = 1'-0"

12" 0' 1' 2' 3' 4' 5' 6' 7'
3/8" = 1'-0"

60% SUBMITTAL - NOT FOR CONSTRUCTION

NO.	BY	CHK	APP
B	MDS	RKC	AEC

60% SUBMITTAL
REVISIONS AND RECORD OF USE
DATE: 7/30/2019

BLACK & VEATCH
JOINT VENTURE
BLACK & VEATCH
FILANC

CITY OF MORRO BAY
MORRO BAY WRF
RECLAMATION FACILITY (WRF)

CHEMICAL FACILITY
PLUMBING
PLAN

DESIGNED: SM
DETAILED: MDS
CHECKED: AEC
APPROVED:
DATE: 7/30/2019

0 1/2 1
IF THIS BAR DOES NOT MEASURE 1" THEN DRAWING IS NOT TO FULL SCALE

PROJECT NO.
400530

90-P-101
SHEET
OF

PLOTTED: 7/30/2019 1:31:18 PM
D400530

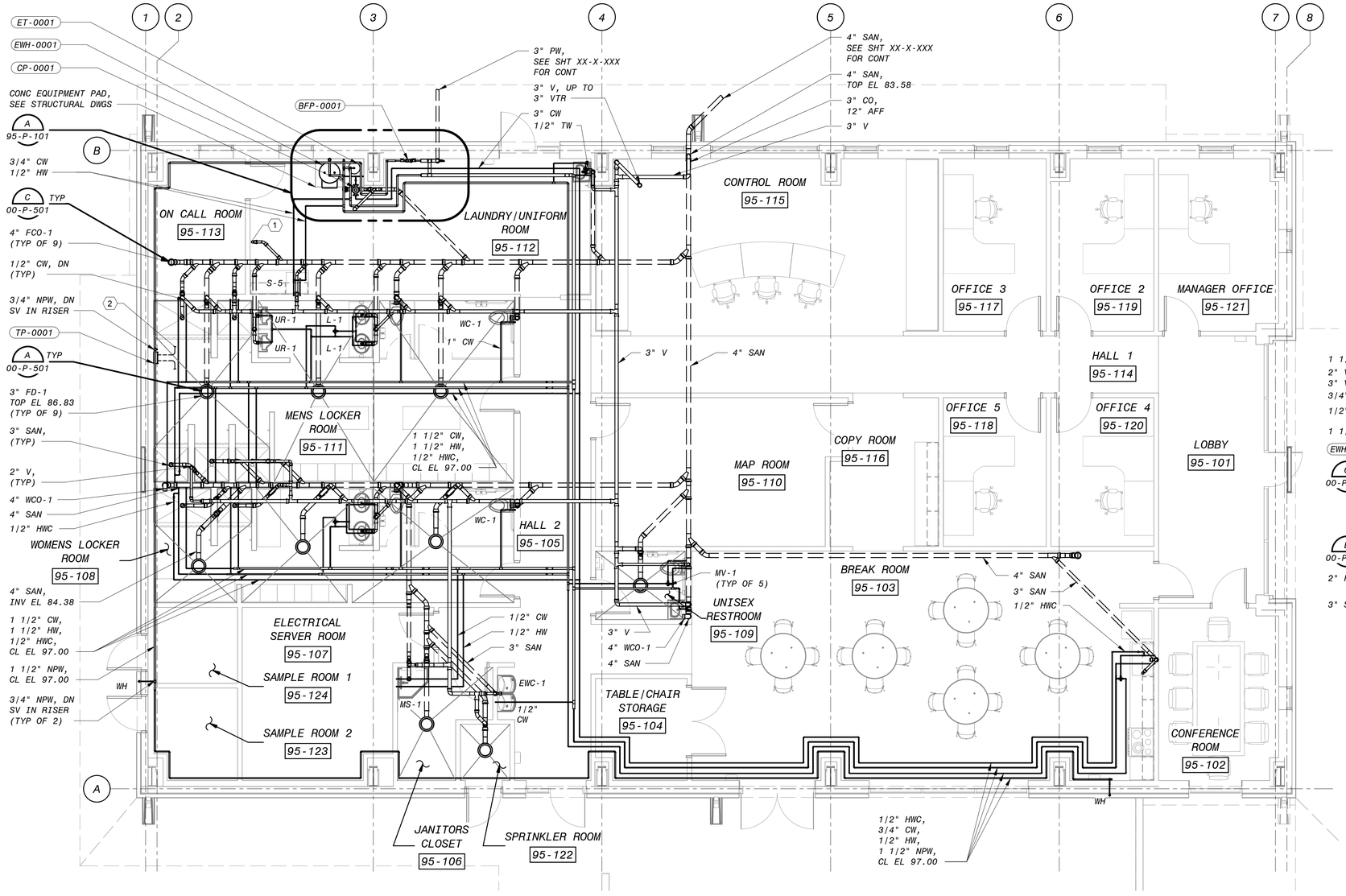

PLAN
3/16" = 1'-0"

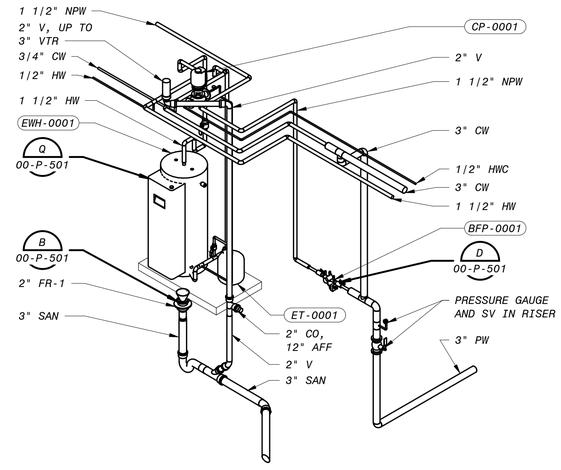

A ENLARGED ISOMETRIC
NO SCALE

SHEET KEYNOTES

1. 2" SAN PIPE CAPED AT 12" AFF FOR WASHING MACHINE.
2. 1/2" TRAP PRIMER PIPING TO ALL FD AND FR.

6" 4' 2' 0' 5' 10'
3/16" = 1'-0"

60% SUBMITTAL - FOT FOR CONSTRUCTION

NO.	BY	CHK	APP	DATE	REVISIONS AND RECORD OF USE
B	MDS	RWC	AEC	7/30/2019	60% SUBMITTAL

BLACK & VEATCH
JOINT VENTURE
BLACK & VEATCH
FILANC

CITY OF MORRO BAY
MORRO BAY WRF
RECLAMATION FACILITY (WRF)

OPERATIONS BUILDING
PLUMBING
PLAN

DESIGNED: SM
DETAILED: MDS
CHECKED: AEC
APPROVED:
DATE: 7/30/2019

0 1/2 1
IF THIS BAR DOES NOT MEASURE 1" THEN DRAWING IS NOT TO FULL SCALE

PROJECT NO.
400530

95-P-101
SHEET
OF

PLOTTED: 7/30/2019 1:37:54 PM
D400530

GENERAL NOTES

1. PLUMBING DESIGN IN THIS SPACE TO BE DETERMINED WHEN LABORATORY DESIGN IS COMPLETED IN THE NEXT PHASE.



SHEET KEYNOTES

1. 2" FR FOR BFP-95-001.
2. 2" FR FOR EWH-95-001.
3. 1 1/2" NG, SEE SHT XX-X-XXX FOR CONT.
4. 1" CW, 1 1/2" TW, 1" HW, FOR FUTURE LABORATORY SERVICES.
5. 1/2" TRAP PRIMER PIPING TO ALL FD AND FR.

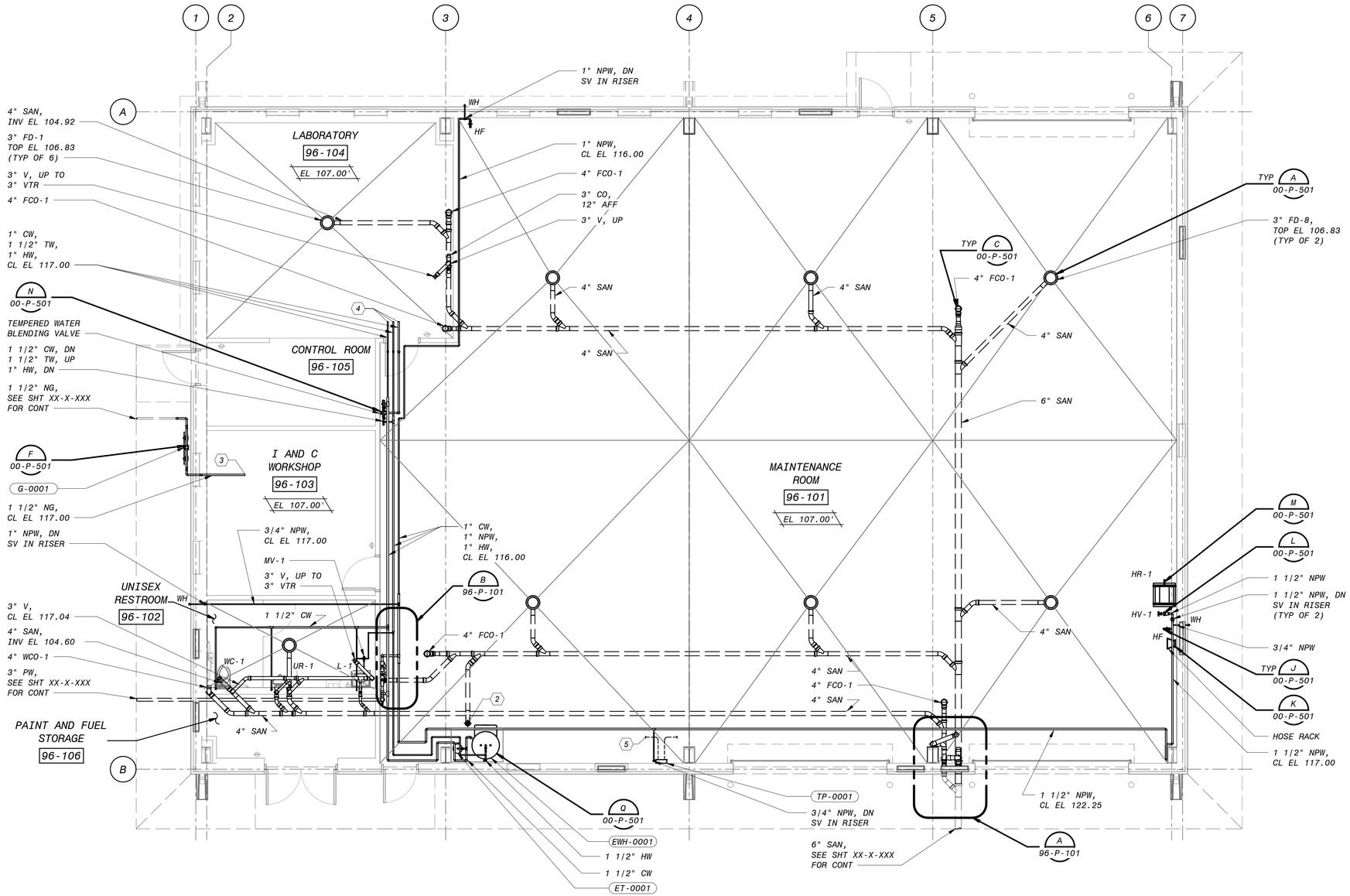

PLAN
3/16" = 1'-0"

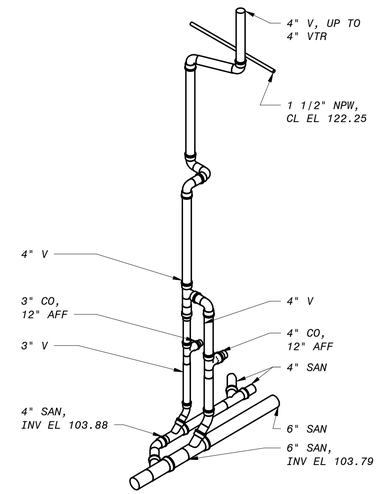

A ENLARGED ISOMETRIC
NO SCALE

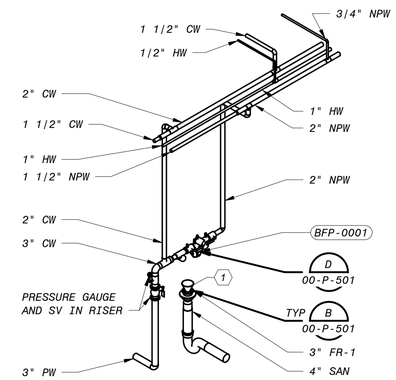

B ENLARGED ISOMETRIC
NO SCALE

6" 4' 2' 0' 5' 10'
3/16" = 1'-0"

60% SUBMITTAL - NOT FOR CONSTRUCTION

NO.	BY	CHK	APP
B	MDS	RWC	AEC

60% SUBMITTAL
REVISIONS AND RECORD OF USE
DATE: 7/30/2019

BLACK & VEATCH
JOINT VENTURE
BLACK & VEATCH
FILANC

CITY OF MORRO BAY
MORRO BAY WRF
RECLAMATION FACILITY (WRF)

MAINTENANCE BUILDING
PLUMBING
PLAN

DESIGNED: SM
DETAILED: MDS
CHECKED: AEC
APPROVED:
DATE: 7/30/2019

0 1/2 1
IF THIS BAR DOES NOT MEASURE 1" THEN DRAWING IS NOT TO FULL SCALE

PROJECT NO.
400530

96-P-101
SHEET
OF

PLOTTED: 7/30/2019 2:03:21 PM
D400530

SYSTEM ABBREVIATIONS

CWR	CHILLED WHATER RETURN
CWS	CHILLED WATER SUPPLY
C	CONDENSATE DRAIN
CDWR	CONDENSER WATER RETURN
CDWS	CONDENSER WATER SUPPLY
HWR	HEATING WATER RETURN
HWS	HEATING WATER SUPPLY
LPC	LOW PRESSURE CONDENSATE
LPS	LOW PRESSURE STEAM (<15 PSIG)
R	REFRIGERANT

HVAC LEGEND


DIFFUSER FOR FLEXIBLE DUCT

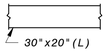

DUCTWORK DIMENSIONS, THE FIRST DIMENSION IS THE SIDE SEEN OR SIDE THE LEADER LINE TOUCHES. SEE GENERAL MECHANICAL NOTES.


FLEXIBLE CONNECTION


FLEXIBLE DUCTWORK

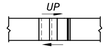

INCLINED RISE (UP) OR DROP (DN) IN RESPECT TO DIRECTION OF AIRFLOW


NEGATIVE PRESSURE DUCT


POSITIVE PRESSURE DUCT

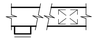
REGISTER, GRILLE OR DIFFUSER

ROUND OR FLEXIBLE DUCT TAKEOFF


ROUND TO SQUARE TRANSITION


TURNING VANES

AIR INLET & OUTLET IDENTIFICATIONS

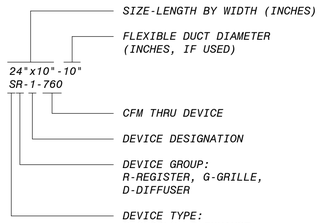

CONTROLS & INSTRUMENTATION LEGEND

CS	CONTROL STATION
DG	DRAFT GAUGE
E E	ELECTRIC OPERATOR (EXPLOSION PROOF)
E M	ELECTRIC OPERATOR (MODULATING)
E	ELECTRIC OPERATOR (2 POSITION)
EVS 1	EMERGENCY VENTILATION SWITCH W/ NUMBER
FS	FLOW SWITCH
	GAUGE ACTIVATOR/ISOLATOR
H 1	HUMIDISTAT W/ NUMBER
LS	LEVEL SWITCH
PDS 1	PRESSURE DIFFERENTIAL SWITCH W/ NUMBER
P	PRESSURE GAUGE W/ SHUTOFF VALVE
PS	PRESSURE SWITCH
SMD 1	SMOKE DETECTOR W/ NUMBER
S	SOLENOID OPERATOR
	THERMOMETER - DIAL TYPE
	THERMOMETER - STEM TYPE
TS 1	TEMPERATURE SENSOR WITH NUMBER
T 1	THERMOSTAT WITH NUMBER
V	VACUUM GAUGE W/ SHUTOFF VALVE

MECHANICAL ABBREVIATIONS

A

A	ALARM
AC	AIR COMPRESSOR
ACCU	AIR COOLED CONDENSING UNIT
AD	ACCESS DOOR
AF	AIR FLOW, AIRFOIL
AFD	ADJUSTABLE FREQUENCY DRIVE
AFF	ABOVE FINISH FLOOR
AFM	AIR FLOW MONITOR
AHU	AIR HANDLING UNIT
ALUM	ALUMINUM
AP	ACCESS PANEL
APPROX	APPROXIMATE
AS	AIR SEPARATOR
ATU	AIR TERMINAL UNIT
AUTO	AUTOMATIC
AVG	AVERAGE

B

B	BELT DRIVE, BLOW THROUGH
BDD	BACKDRAFT DAMPER
BF	BLIND FLANGE
BFF	BELOW FINISH FLOOR
BFP	BACKFLOW PREVENTER
BH	BASEBOARD HEATER
BI	BACKWARD INCLINED, BUILT-IN THERMOSTAT
BL	BOTTOM LEVEL
BLDG	BUILDING
BLR	BLOWER
BOD	BOTTOM OF DUCT ELEVATION
BOT	BOTTOM
BTUH	BRITISH THERMAL UNITS PER HOUR
BU	BELL-UP
BV	BALL VALVE

C

C	CHANNEL, CONVECTOR, COOLING, COOLING (MAKE ON RISE)
CB	CENTRIFUGAL BLOWER
CBD	COUNTERBALANCE BACKDRAFT DAMPER
CC	COOLING COIL
CD	CONTROL DAMPER
CDWP	CONDENSER WATER PUMP
CENTR	CENTRIFUGAL
CF	CABINET FAN
CFM	CUBIC FEET PER MINUTE
CH	CONVECTION HEATER
C/L	CENTERLINE
CO	CLEANOUT
CONC	CONCRETE
CONN	CONNECTION
CONT	CONTINUATION
CS	CONTROL STATION
CT	COOLING TOWER
CU	CONDENSING UNIT
CV	CHECK VALVE, CONTROL VALVE
CWP	CHILLED WATER PUMP

D

D	DIRECT DRIVE, DRAW-THRU
DB	DRY BULB
DDC	DIRECT DIGITAL CONTROL
DEH	DEHUMIDIFIER
DF	DUCT FAN
DIA	DIAMETER
DM	DUCT MOUNTED
DN	DOWN
DX	DIRECT EXPANSION

E

E	ELECTRIC, ELECTRIC OPERATOR, EXHAUST
EA	EACH, EXHAUST AIR
EAT	ENTERING AIR TEMPERATURE
EC	ECONOMIZER, EVAPORATIVE COOLER
ECH	ELECTRIC CABINET HEATER
ECP	EQUIPMENT CONTROL PANEL
EDH	ELECTRIC DUCT HEATER
EF	EXHAUST FAN
EFF	EFFICIENCY
EGS	EMERGENCY GAS SCRUBBER
EIH	ELECTRIC INFRARED HEATER
EL	ELEVATION
EP	EXPLOSION PROOF
EQUIP	EQUIPMENT
ES	EMERGENCY SWITCH
ESP	EXTERNAL STATIC PRESSURE
ET	EXPANSION TANK
EUH	ELECTRIC UNIT HEATER
EV	EXHAUST VALVE
EVS	EMERGENCY VENTILATION SWITCH
EWT	ENTERING WATER TEMPERATURE
EXIST	EXISTING

F

F	DEGREES FAHRENHEIT
FBD	FACE AND BYPASS DAMPER
FC	FORWARD CURVE, FAN COIL
FCU	FAN COIL UNIT
FD	FIRE DAMPER
FDB	DEGREES FAHRENHEIT DRY BULB
FEF	FUME EXHAUST FAN
FLEX	FLEXIBLE
FM	FLOW METER
FPM	FEET PER MINUTE
FR	FUNNEL RECEPTOR
FRP	FIBERGLASS REINFORCED PLASTIC PIPE
FS	FLOW SWITCH
FSD	COMBINATION FIRE/SMOKE DAMPER
FT	FEET, FIN TUBE HEATER
FUR	FURNACE
FWB	DEGREES FAHRENHEIT WET BULB

G

GA	GAUGE
GALV	GALVANIZED
GIH	GAS INFRARED HEATER
GPM	GALLONS PER MINUTE
GUH	GAS UNIT HEATER
GV	GATE VALVE

H

H	HAND OPERATOR, HEATING, HEATING (MAKE ON FALL), HEIGHT, HORIZONTAL, HUMIDISTAT
HC	HEATING COIL
HCH	HEATING WATER CABINET HEATER
HE	HEAT EXCHANGER
HO	HAND-OFF
HOA	HAND-OFF-AUTO
HP	HEAT PUMP, HORSEPOWER
HR	HEAT RECOVERY UNIT
HUH	HEATING WATER UNIT HEATER
HUM	HUMIDIFIER
HWB	HEATING WATER BOILER
HWP	HEATING WATER PUMP
HZ	HERTZ

I

I	INTAKE
ID	INSIDE DIAMETER
IN	INCHES
INV	INVERT

K

KW	KILOWATT

L

L	LINED DUCT, LOUVER
LAT	LEAVING AIR TEMPERATURE
LBS	POUNDS
LD	COMBINATION LOUVER/DAMPER
LI	LEVEL INDICATOR
LS	LEVEL SWITCH
LWT	LEAVING WATER TEMPERATURE

M

MAU	MAKEUP AIR UNIT
MAX	MAXIMUM
MCA	MINIMUM CIRCUIT AMPS
ME	MIST ELIMINATOR
MFR	MANUFACTURER
MOCP	MAXIMUM OVERCURRENT PROTECTION
MIN	MINIMUM
MOD	MODULATING

N

NC	NORMALLY CLOSED
NO	NORMALLY OPEN, NUMBER
NPSHR	NET POSITIVE SUCTION HEAD REQUIRED

O

OA	OUTSIDE AIR
OD	OUTSIDE DIAMETER

P

P	PNEUMATIC
PD	PRESSURE DROP (INCHES OF WATER FOR AIR, FEET OF WATER FOR FLUIDS)
PAC	PACKAGED AIR CONDITIONING UNIT
PAH	PACKAGED AIR HANDLING UNIT
PDS	PRESSURE DIFFERENTIAL SWITCH
PF	PROPELLER FAN
PHP	PACKAGED HEAT PUMP
PL	PLATE
POS	POSITION
PPM	PARTS PER MILLION
PROP	PROPELLER
PRS	PRESSURE REDUCING STATION
PRV	POWER ROOF VENTILATOR, PRESSURE REDUCING VALVE
PS	PRESSURE SWITCH
PSI	POUNDS PER SQUARE INCH
PSIA	POUNDS PER SQUARE INCH ABSOLUTE
PSIG	POUNDS PER SQUARE INCH GAUGE
PTAC	PACKAGED TERMINAL AIR CONDITIONER

R

RA	REACTIVATION AIR, RETURN AIR
RAC	ROOM AIR CONDITIONER
RCS	REMOTE CONTROL STATION
REQD	REQUIRED
RH	RELATIVE HUMIDITY, ROOF HOOD
RSF	ROOF SUPPLY FAN

S

SA	SUPPLY AIR
SCD	SMOKE CONTROL DAMPER
SCFM	STANDARD CUBIC FEET PER MINUTE
SF	SQUARE FEET, SUPPLY FAN
SH	SHEET
SIM	SIMILAR
SMD	SMOKE DETECTOR
SP	STATIC PRESSURE (INCHES OF WATER)
SPS	STATIC PRESSURE SENSOR
SS	STAINLESS STEEL
STD	STANDARD
SV	SERVICE VALVE, SHUTOFF VALVE, SOLENOID VALVE

T

T	THERMOSTAT
TCP	TEMPERATURE CONTROL PANEL
TCV	TEMPERATURE CONTROL VALVE
TE	TEMPERATURE ELEMENT
TL	TOP LEVEL
TS	TIP SPEED
TYP	TYPICAL

V

V	VERTICAL
VAC	VACUUM OUTLET
VANE	VANEAXIAL
VAV	VARIABLE AIR VOLUME
VCD	VOLUME CONTROL DAMPER
VF	VANEAXIAL FAN

W

W	WIDE FLANGE, WIDTH
WB	WET BULB
WC	WATER CHILLER WATER COLUMN
WF	WALL FAN
WG	WATER GAUGE
WH	WALL HEATER
WM	WALL MOUNTED
WST	WATER STORAGE TANK
WT	WEIGHT
WV	WATER CONTROL VALVE

Z

ZD	ZONE DAMPER

GENERAL HVAC NOTES

1. THIS IS GENERAL LEGEND AND ABBREVIATION SHEET FOR HVAC DRAWINGS. SOME ITEMS CONTAINED ON THIS SHEET MAY NOT BE USED ON THIS SPECIFIC PROJECT.
2. ALL MECHANICAL HVAC WORK SHALL BE IN ACCORDANCE WITH THE FOLLOWING APPLICABLE CODES:
   2016 CALIFORNIA BUILDING CODE
   2016 CALIFORNIA MECHANICAL CODE
   2016 CALIFORNIA ENERGY CONSERVATION CODE
3. FOR ROOFTOP EQUIPMENT CURBS, FLUES, AND FLASHING DETAILS, SEE ARCHITECTURAL DRAWINGS.
4. SEE ARCHITECTURAL AND STRUCTURAL DRAWINGS FOR ALL EQUIPMENT BASE DETAILS.
5. "SCREENED" DELINEATION DENOTES EXISTING AND NEW FACILITIES AND IS FOR REFERENCE ONLY. "LIGHT" LINE DELINEATION DENOTES EXISTING MECHANICAL EQUIPMENT AND SYSTEMS. EXISTING FACILITY AND MECHANICAL SYSTEMS INFORMATION WAS TAKEN FROM PREVIOUS DRAWINGS, CONSTRUCTION RECORDS, DATA, AND FIELD SURVEY INFORMATION. ACTUAL LOCATION, ARRANGEMENT, AND DIMENSIONS SHALL BE FIELD VERIFIED AND WORK INSTALLED TO MEET ACTUAL CONDITIONS AND LOCATIONS ENCOUNTERED. "BOLD" (DARK) DELINEATION IS NEW WORK TO BE CONSTRUCTED UNDER THIS CONTRACT.
6. ALL MATERIALS, FITTINGS, COVERS, AND EQUIPMENT INSTALLED IN RETURN AIR PLENUMS SHALL BE NONCOMBUSTIBLE AND UL LISTED FOR USE IN RETURN AIR PLENUMS.
7. ALL PIPE AND DUCT PENETRATIONS THROUGH FIRE RESISTANCE RATED ASSEMBLIES SHALL BE PROVIDED WITH FIRESTOP SYSTEMS, EQUIPMENT AND ACCESSORIES TO RESIST THE PASSAGE OF FIRE, SMOKE AND OTHER GASES. THE ORIGINAL FIRE RESISTANCE RATING OF THE ASSEMBLY PENETRATED SHALL BE MAINTAINED FOR ALL TYPES OF PENETRATIONS.
8. METAL ROOF DECKING OR BOTTOM CHORD OF BAR JOISTS SHALL NOT BE USED FOR THE SUPPORT OF EQUIPMENT, PIPING, OR DUCTWORK.
9. ALL HANGERS, BRACKETS, OR BRACES FOR PIPING, DUCTWORK AND EQUIPMENT ARE NOT INDICATED ON THE DRAWINGS. REFER TO THE SPECIFICATIONS FOR SUPPORT REQUIREMENTS NOT SHOWN ON THE PLANS.
10. OUTSIDE AIR INLETS SHALL BE LOCATED A MINIMUM OF 10' AWAY FROM ANY EXHAUST AIR OR PLUMBING VENT OUTLET.
11. ALL EQUIPMENT, PIPING AND DUCTWORK FINAL LOCATIONS SHALL BE COORDINATED TO AVOID INTERFERENCES WITH STRUCTURE, OTHER PIPING, EQUIPMENT, DUCTWORK, AND CONDUIT. UNLESS SPECIFICALLY DIMENSIONED, THE PIPE AND DUCTWORK ROUTING SHOWN IS INTENDED TO INDICATE GENERAL LOCATION ONLY. INSTALL DUCTWORK TO ALLOW FOR PIPING TO BE ROUTED NEAR WALLS.
12. ALL PIPING AND DUCTWORK SHALL BE ROUTED AS HIGH AS POSSIBLE WITH A MINIMUM HEIGHT OF 8'-0" ABOVE THE WALKING SURFACE UNLESS OTHERWISE INDICATED BY A CENTERLINE OR BOTTOM OF DUCT ELEVATION.
13. DUCTWORK SHALL BE FABRICATED, REINFORCED, SUPPORTED AND SEALED FOR OPERATING PRESSURES INDICATED IN THE SCHEDULES FOR THE EQUIPMENT IT SERVES. ALL DUCTWORK SHALL HAVE A MINIMUM SMACNA PRESSURE CLASSIFICATION OF ONE INCH.
14. DUCT SIZES INDICATED ARE CLEAR DIMENSIONS INSIDE THE DUCT OR DUCT LINING. SHEET METAL SIZES ARE LARGER FOR INTERNALLY LINED DUCTWORK.
15. MINIMUM INSULATION THICKNESSES FOR DUCTWORK SHALL BE AS INDICATED IN THE SPECIFICATIONS UNLESS OTHERWISE INDICATED ON THE PLANS WITH A "L" OR "W" DESIGNATION. WHERE AN INSULATION THICKNESS IS INDICATED ON THE DRAWINGS, IT SHALL GOVERN. THE FOLLOWING DENOTES THE DIFFERENT INSULATION THICKNESSES INDICATED ON THE DRAWINGS:
    L,L1 - 1 INCH INTERNALLY LINED W,W1 - 1 INCH EXTERNALLY WRAPPED
    L15 - 1.5 INCH INTERNALLY LINED W15 - 1.5 INCH EXTERNALLY WRAPPED
    L2 - 2 INCH INTERNALLY LINED W2 - 2 INCH EXTERNALLY WRAPPED
16. DUCT CONNECTIONS TO EQUIPMENT, PIPING SIZES TO EQUIPMENT, AND EQUIPMENT SUPPORTS SHALL BE VERIFIED AND ADJUSTED TO MATCH ACTUAL EQUIPMENT FURNISHED.
17. THE LOCATION OF PIPING AND VALVES TO THE AIR HANDLING EQUIPMENT SHALL NOT INTERFERE WITH FILTER REMOVAL OR AIR HANDLING EQUIPMENT SERVICING.
18. ROOFTOP EQUIPMENT SHALL NOT BE LOCATED SUCH THAT ACCESS TO CONTROLS AND TO PERFORM SERVICE FOR EQUIPMENT IS LOCATED WITHIN 10 FEET OF THE BUILDING EDGE.
19. CONTROL DAMPER SIZES SHALL MATCH DIMENSIONS OF ASSOCIATED LOUVER UNLESS OTHERWISE INDICATED.
20. SEISMIC RESTRAINTS/BRACING SHALL BE PROVIDED FOR ALL EQUIPMENT, DUCTWORK, AND ACCESSORIES IN ACCORDANCE WITH THE LATEST SMACNA SEISMIC RESTRAINT MANUAL AND LOCAL BUILDING CODES. CONTRACTOR SHALL BE RESPONSIBLE FOR ALL SEISMIC SUPPORTS AND ADDITIONAL/MISCELLANEOUS STEEL REQUIRED FOR PROPER INSTALLATION OF SUPPORTS. SUPPORTS AND SEISMIC RESTRAINTS DESIGN SUBMITTALS SHALL BEAR THE STAMP AND SIGNATURE OF A AN ENGINEER LICENSED IN THE STATE OF CALIFORNIA.
21. INSULATION SHALL BE PROVIDED FOR EQUIPMENT, PIPING AND DUCT SYSTEMS AS INDICATED IN THE SPECIFICATIONS.

60% SUBMITTAL- NOT FOR CONSTRUCTION

NO.	BY	CHK	APP
B	MDS	RWC	LDA

DATE	REVISIONS AND RECORD OF USE
7/30/2019	60% SUBMITTAL

BLACK & VEATCH JOINT VENTURE FILANC BLACK & VEATCH

CITY OF MORRO BAY
MORRO BAY WRF
RECLAMATION FACILITY (WRF)

HVAC
LEGEND, ABBREVIATIONS AND GENERAL NOTES

DESIGNED: SM
DETAILED: MDS
CHECKED: LDA
APPROVED:
DATE: 7/30/2019

0 1/2 1
IF THIS BAR DOES NOT MEASURE 1" THEN DRAWING IS NOT TO FULL SCALE

PROJECT NO.
400530

00-H-001
SHEET
OF

PLOTTED: 7/30/2019 2:40:03 PM
D400530

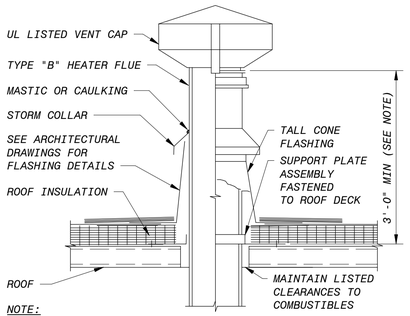

NOTE:
FLUE HEIGHT SHALL BE INCREASED SUCH THAT VENT CAP IS NOT LESS THAN 2' HIGHER THAN ANY PORTION OF THE BUILDING WITHIN 10'.

A FLUE
NO SCALE

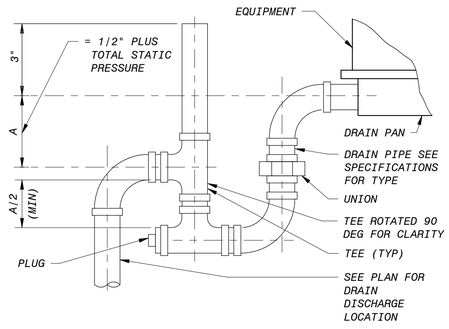

B DRAIN PAN TRAP - DRAW THROUGH
NO SCALE

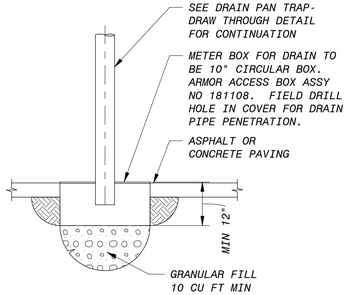

C CONDENSATE DRAIN SUMP
NO SCALE

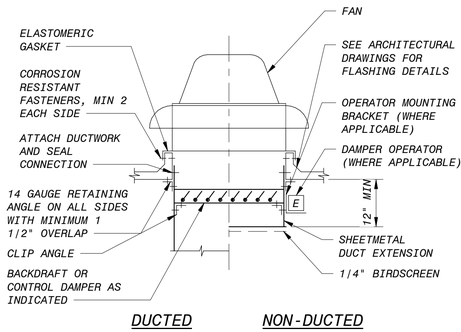

DUCTED NON-DUCTED

D ROOF MOUNTED FAN
NO SCALE

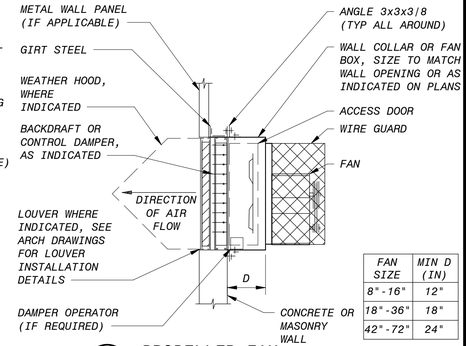

FAN SIZE	MIN D (IN)
8"-16"	12"
18"-36"	18"
42"-72"	24"

E PROPELLER FAN
NO SCALE

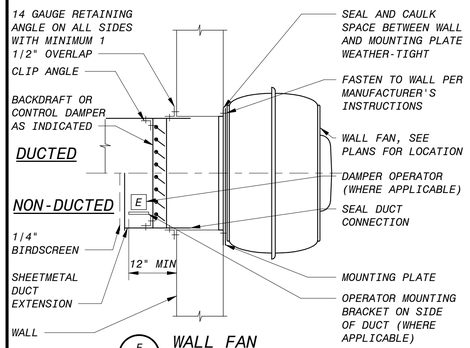

F WALL FAN
NO SCALE

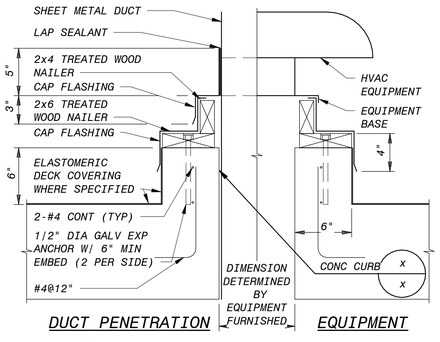

G HVAC EQUIPMENT CURB
NO SCALE

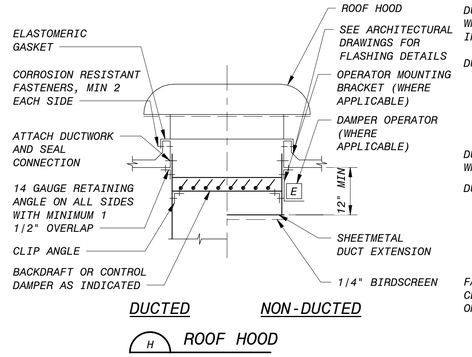

H ROOF HOOD
NO SCALE

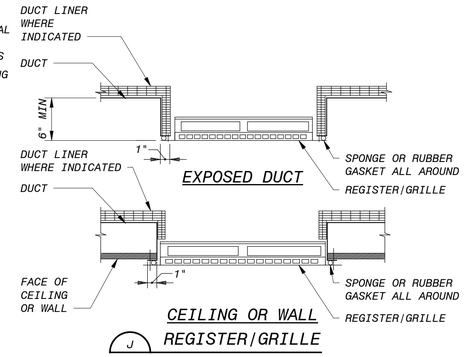

J REGISTER/GRILLE
NO SCALE

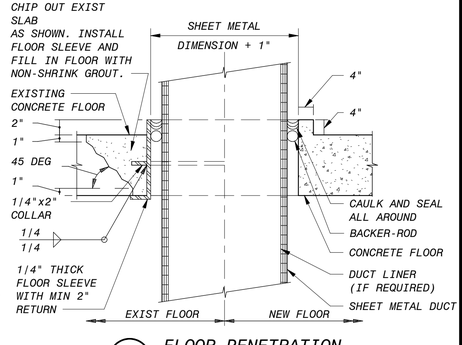

K FLOOR PENETRATION
NO SCALE

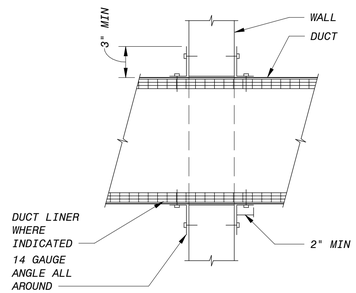

L WALL PENETRATION - INTERIOR
NO SCALE

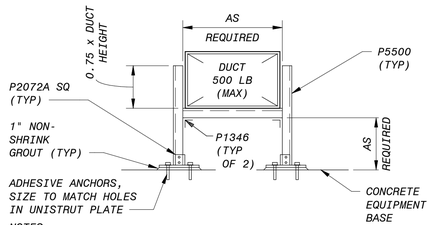

NOTES:
1. DISTANCE BETWEEN SUPPORTS APPROXIMATELY 10 FEET OR AS INDICATED ON PLANS.
2. USE HVAC DUCT CONSTRUCTION STANDARDS (SMACNA) TO DETERMINE WEIGHT OF DUCT.
3. PART NUMBERS USED REFLECT UNISTRUT PRODUCTS. USE UNISTRUT EQUAL PRODUCTS.
4. UNISTRUT MATERIAL TO MATCH DUCT MATERIAL.

M DUCT SUPPORT
NO SCALE

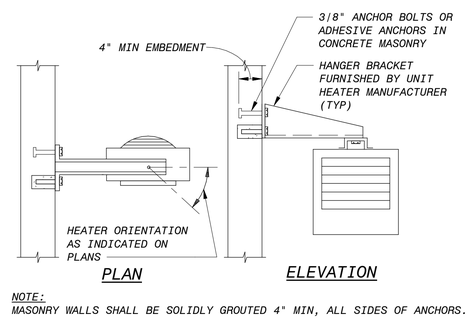

NOTE:
MASONRY WALLS SHALL BE SOLIDLY GROUTED 4" MIN, ALL SIDES OF ANCHORS.

N ELECTRIC UNIT HEATER SUPPORT - WALL
NO SCALE

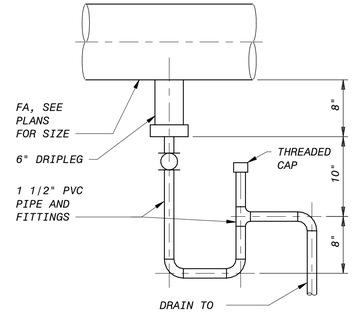

P DRAIN TRAP
NO SCALE

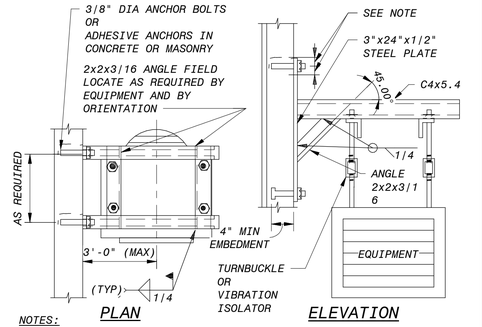

NOTES:
MASONRY WALLS SHALL BE SOLIDLY GROUTED 4" MIN, ALL SIDES OF ANCHORS.

Q WALL HANGER - 4 ROD - EQUIPMENT SUPPORT - STRUCT MEMBERS
NO SCALE

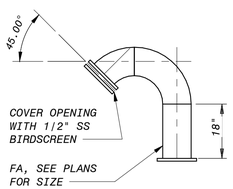

R GOOSENECK INTAKE/EXHAUST
NO SCALE

60% SUBMITTAL- NOT FOR CONSTRUCTION

NO.	BY	CHK	APP	DATE	REVISIONS AND RECORD OF USE
B	MDS	RWC	LDA	7/30/2019	60% SUBMITTAL

BLACK & VEATCH
JOINT VENTURE
BLACK & VEATCH
FILANC

CITY OF MORRO BAY
MORRO BAY WRF
RECLAMATION FACILITY (WRF)

HVAC DETAILS

DESIGNED: SM
DETAILED: MDS
CHECKED: LDA
APPROVED:
DATE: 7/30/2019

0 1/2 1
IF THIS BAR DOES NOT MEASURE 1" THEN DRAWING IS NOT TO FULL SCALE

PROJECT NO. 400530

00-H-501
SHEET OF

PLOTTED: 7/30/2019 2:40:03 PM
D400530

AIR HANDLING UNIT SCHEDULE

UNIT NUMBER	LOCATION	MANUFACTURER	MODEL	AIRFLOW (CFM)	ESP (IN WC)	ORIENTATION	INDOOR FAN MOTOR HP	DRIVE	POWER SUPPLY		COOLING				HEATING			FILTER DATA		VIBRATION ISOLATION	APPROX WEIGHT (LBS)	NOTES
											EAT		CAPACITY (BTUH)		EAT							
									VOLTS	PHASE	(FDB)	(FWB)	SENSIBLE	TOTAL	(FDB)	TYPE	CAPACITY (BTUH OR (KW))	TYPE	THICKNESS (IN)			
95-HVAC-AHU-0001	AREA 95 OPERATION BUILDING	---	---	1600	1	HORIZONTAL	1	DIRECT	120	1	88	64	24600	61590	88	ELECTRIC	67400	PLEATED	2	INTERNAL	873	1

CONDENSING UNIT/HEAT PUMP SCHEDULE

UNIT NUMBER	LOCATION	MANUFACTURER	MODEL	COOLING				HEATING OUTPUT CAPACITY (MBH)	POWER SUPPLY		MINIMUM CIRCUIT AMPACITY	ARI MINIMUM EFFICIENCY	MATCHED WITH INDOOR UNIT	APPROX WEIGHT (LBS)	NOTES
				CAPACITY (MBH)	MINIMUM CAPACITY STEPS	SUCTION TEMPERATURE (F)									
						MINIMUM	MAXIMUM		VOLTS	PHASE					
95-HVAC-ACCU-0001	95-OPERATION BUILDING	L.G	ARUM241DTE5	240	1	45	50	243	480	3	41.4	11.4	95-HVAC-FCU-0001 TO 0012	312	1,2
95-HVAC-ACCU-0002	95-OPERATION BUILDING	L.G	---	29	1	45	50	243	480	3	41.4	11.4	95-HVAC-AHU-0001	873	1
96-HVAC-ACCU-0001	AREA 96 MAINTENACE BUILDING	---	---	18	1	45	50	---	208	1	10	9.5 SEER	96-HVAC-FCU-0001	---	---

FAN COIL UNIT SCHEDULE

UNIT NUMBER	LOCATION	MANUFACTURER	MODEL	AIRFLOW (CFM)	AIR PD (IN WC)	EAT		LAT (FDB)	CAPACITY (MBH)		APPROX WEIGHT (LBS)	NOTES
						(FDB)	(FWB)		SENSIBLE	TOTAL		
95-HVAC-FCU-0001	AREA 95 OPERATION BUILDING-BREAK ROOM	LG Electronics	CONCEALED DUCT	2119.0	---	72	57.2	61.2	76.4	53.5	---	1,2
95-HVAC-FCU-0002	AREA 95 OPERATION BUILDING-CONFERENCE ROOM	LG Electronics	CASSETTE TYPE	395.0	---	85	57.2	61.2	19.1	13.8	---	1,2
95-HVAC-FCU-0003	AREA 95 OPERATION BUILDING-LOBBY	LG Electronics	CASSETTE TYPE	918.0	---	85	57.2	61.2	36.2	26.8	---	1,2
95-HVAC-FCU-0004	AREA 95 OPERATION BUILDING-OFFICE 4 & 5	LG Electronics	CONCEALED DUCT	468.2	---	85	57.2	61.2	9.6	9.3	---	1,2
95-HVAC-FCU-0005	AREA 95 OPERATION BUILDING-MAP ROOM AND COPY ROOM	LG Electronics	CONCEALED DUCT	512.0	---	85	57.2	61.2	15.4	14.6	---	1,2
95-HVAC-FCU-0006	AREA 95 OPERATION BUILDING-MANAGER OFFICE	LG Electronics	CASSETTE TYPE	282.0	---	85	57.2	61.2	9.6	6.9	---	1,2
95-HVAC-FCU-0007	AREA 95 OPERATION BUILDING-OFFICE 2 & 3	LG Electronics	CONCEALED DUCT	512.0	---	85	57.2	61.2	12.3	11.8	---	1,2
95-HVAC-FCU-0008	AREA 95 OPERATION BUILDING-CONTROL ROOM	LG Electronics	CONCEALED DUCT	1031.0	---	85	57.2	61.2	362	26.8	---	1,2
95-HVAC-FCU-0009	AREA 95 OPERATION BUILDING-HALL2 & TABLE/CHAIR	LG Electronics	CONCEALED DUCT	459.1	---	85	57.2	61.2	19.1	13.9	---	1,2
95-HVAC-FCU-0010	AREA 95 OPERATION BUILDING-ON CALL & LAUNDRY	LG Electronics	CONCEALED DUCT	512.0	---	85	57.2	61.2	15.4	10.6	---	1,2
95-HVAC-FCU-0011	AREA 95 OPERATION BUILDING-WOEMENS AND MENS TOILET	LG Electronics	CONCEALED DUCT	459.1	---	85	57.2	61.2	19.1	13.9	---	1,2
95-HVAC-FCU-0012	AREA 95 OPERATION BUILDING-SAMPLE STORAGE 1	LG Electronics	CASSETTE TYPE	395.0	---	85	57.2	61.2	5.6	4.5	---	1,2
96-HVAC-FCU-0001	AREA 96 MAINTENACE BUILDING	---	WALL MOUNTED	1200.0	---	85	61.6	61.2	13.95	13.95	---	1,2

FAN SCHEDULE

UNIT NUMBER	LOCATION	FAN TYPE	AIRFLOW (CFM)	ESP (IN WC)	MOTOR HP	POWER SUPPLY		MINIMUM WHEEL DIAMETER (IN)	WHEEL TYPE	DRIVE	FILTER DATA		VIBRATION ISOLATION	APPROX WEIGHT (LBS)	NOTES
						VOLTS	PHASE				TYPE	THICKNESS (IN)			
50-HVAC-EF-0001	AREA 50 RO/UV BUILDING	PF	4000	0.625	1	480	3	48	P	BELT	---	---	INTERNAL	100	1,2A
50-HVAC-EF-0002	AREA 50 RO/UV BUILDING	PF	4000	0.625	1	480	3	48	P	BELT	---	---	INTERNAL	100	1,2A
96-HVAC-DF-0001	AREA 96 MAINTENACE BUILDING-SERVICE TRUCKBAY	DF	2800	0.625	1.5	480	3	16	C	BELT	---	---	SPRING HANGER	540	2A
96-HVAC-EF-0001	AREA 96 MAINTENACE BUILDING	PF	200	0.125	1/40	120	1	8	P	DIRECT	---	---	INTERNAL	140	1,2A
96-HVAC-EF-0002	AREA 96 MAINTENACE BUILDING	PF	200	0.125	1/40	120	1	8	P	DIRECT	---	---	INTERNAL	140	1,2A
96-HVAC-EF-0003	AREA 96 MAINTENACE BUILDING	PF	3100	0.625	3/4	480	3	48	P	BELT	---	---	INTERNAL	140	1,2A
96-HVAC-EF-0004	AREA 96 MAINTENACE BUILDING	PF	3100	0.625	3/4	480	3	48	P	BELT	---	---	INTERNAL	140	1,2A

HEATER SCHEDULE

UNIT NUMBER	LOCATION	TYPE	UNIT ORIENTATION	AIR FLOW (CFM)	AIR PD (IN WC)	OUTPUT CAPACITY		WATER FLOW (GPM)	WATER PD (FT)	MOTOR HP	POWER SUPPLY		APPROX WEIGHT (LBS)	NOTES
						(BTUH)	(KW)				VOLTS	PHASE		
50-HVAC-EUH-0001	AREA 50 RO/UV BUILDING-ELECTRICAL ROOM	EUHHD	HORIZONTAL	410	---	---	2.6	---	---	1/40	208	1	32	1,2
50-HVAC-GUH-0002	AREA 50 RO/UV BUILDING	GUH	HORIZONTAL	750	---	24000	7	---	---	1/30	120	1	100	1,3
50-HVAC-GUH-0003	AREA 50 RO/UV BUILDING	GUH	HORIZONTAL	750	---	24000	7	---	---	1/30	120	1	100	1,3
50-HVAC-GUH-101	AREA 50 RO/UV BUILDING	GUH	HORIZONTAL	750	---	24000	7	---	---	1/30	120	1	100	1,3
95-HVAC-EUH-0001	AREA 95 OPERATION BUILDING-ELECTRICAL ROOM	EUHHD	HORIZONTAL	410	---	---	2.6	---	---	1/40	208	1	32	1,2
96-HVAC-EUH-0001	AREA 96 MAINTENANCE BUILDING-ELECTRICAL ROOM	EUHHD	HORIZONTAL	410	---	---	2.6	---	---	1/40	208	1	32	1,2
96-HVAC-GUH-0001	AREA 96 MAINTENACE BUILDING	GUH	HORIZONTAL	750	---	24000	7	---	---	1/30	120	1	100	1,3
96-HVAC-GUH-0002	AREA 96 MAINTENACE BUILDING	GUH	HORIZONTAL	750	---	24000	7	---	---	1/30	120	1	100	1,3
96-HVAC-GUH-0003	AREA 96 MAINTENACE BUILDING	GUH	HORIZONTAL	750	---	24000	7	---	---	1/30	120	1	100	1,3
96-HVAC-GUH-0004	AREA 96 MAINTENACE BUILDING	GUH	HORIZONTAL	750	---	24000	7	---	---	1/30	120	1	100	1,3

PACKAGED AIR CONDITIONING UNIT/HEAT PUMP SCHEDULE

UNIT NUMBER	LOCATION	MANUFACTURER	INDOOR FAN				POWER SUPPLY		MINIMUM CIRCUIT AMPACITY	COOLING					HEATING				DISCHARGE DIRECTION	ARI MINIMUM EFFICIENCY	OA (CFM)	FILTER DATA		ECONOMIZER DATA		APPROX WEIGHT (LBS)	NOTES
			AIRFLOW (CFM)	ESP (IN WG)	MOTOR HP	DRIVE	VOLTS	PHASE		EAT		CAPACITY (BTUH)		MIN CAPACITY STAGES	EAT	TYPE	CAPACITY (BTUH OR (KW))	MINIMUM HEAT STAGES				TYPE	THICKNESS (IN)	TYPE	CONTROLS		
										(FDB)	(FWB)	SENSIBLE	TOTAL														
50-HVAC-PHP-0001	50-ELECTRICAL ROOM	TRANE	3000	1	1.5	BELT	480	3	19	85.3	---	83859	86169	1	72	AUXILIARY ELECTRIC	35500	1	HORIZONTAL		100	PLEATED	2	POWER EXHAUST	DIFFERENTIAL DRY BULB	--	--
95-HVAC-PHP-0001	95-ELECTRICAL ROOM	TRANE	2030	1	1	BELT	480	3	15	75.6	---	56465	58775	1	72	AUXILIARY ELECTRIC	23700	1	HORIZONTAL	---	100	PLEATED	2	POWER EXHAUST	DIFFERENTIAL DRY BULB	---	---
96-HVAC-PHP-0001	96-LABOROTORY	TRANE	1200	1	1	BELT	480	3	15	85.3	---	68462	40722	1	72	AUXILIARY ELECTRIC	50500	1	HORIZONTAL	---	100	PLEATED	2	POWER EXHAUST	DIFFERENTIAL DRY BULB	---	---

AIR DEVICE SCHEDULE

SYMBOL	MANUFACTURER	MODEL	MODULE SIZE	MATERIAL	FINISH	DAMPER TYPE	NOTES
SR-1	---	272FS	---	ALUMINUM	BAKED WHITE ENAMEL	OPPOSED BLADE	1
RG-1	---	50F	---	ALUMINUM	BAKED WHITE ENAMEL	---	1
ER-1	---	3FL	---	ALUMINUM	BAKED WHITE ENAMEL	OPPOSED BLADE	1

GENERAL SHEET NOTES

SEE DRAWINGS 00-H-001 FOR LEGEND, ABBREVIATIONS AND GENERAL NOTES.

SCHEDULE LEGEND:

AIR HANDLING UNIT (PACKAGED) | FURNACE SCHEDULE:

ACCESSORIES: NONE

CAPACITY NOTE: CAPACITIES LISTED IN PARENTHESES ARE IN UNITS OF "KW". CAPACITIES LISTED WITHOUT PARENTHESES ARE IN UNITS OF "BTUH".

NOTES:
1. UNIT IS SUBJECT TO CORROSION FROM A HYDROGEN SULFIDE LADEN ATMOSPHERE. ALL AIRSTREAM COMPONENTS AND EXPOSED HEAT TRANSFER COMPONENTS SHALL BE GIVEN A PROTECTIVE SPECIAL COATING OF HERESITE OR APPROVED EQUAL. CONTROLS PANELS, WIRING CONNECTIONS AND OTHER SENSITIVE ELECTRONICS SHALL HAVE A CONFORMAL COATING APPLIED.

CONDENSING UNIT/HEAT PUMP SCHEDULE:

ACCESSORIES: NONE

OUTDOOR COIL ENTERING AIR TEMPERATURE:
COOLING — 98° F DESIGN / 0° F MIN
HEATING — 26° F (HEAT PUMP)

NOTES:
1. UNIT IS SUBJECT TO CORROSION FROM A HYDROGEN SULFIDE LADEN ATMOSPHERE. ALL AIRSTREAM COMPONENTS AND EXPOSED HEAT TRANSFER COMPONENTS SHALL BE GIVEN A PROTECTIVE SPECIAL COATING OF HERESITE OR APPROVED EQUAL. CONTROLS PANELS, WIRING CONNECTIONS AND OTHER SENSITIVE ELECTRONICS. SHALL HAVE A CONFORMAL COATING APPLIED.
2. VARIABLE REFERGINANT FLOW.

FAN COIL UNIT SCHEDULE:

ACCESSORIES: NONE

NOTES:

1. SEE ACCU SCHEDULE FOR MCA VALVE OF SPLIT SYSTEM.
2. MANUFACTURER USED AS THE BASIS OF DESIGN IS L.G..

FAN SCHEDULE:

ACCESSORIES: NONE

FAN TYPE NOTES:
DF - DUCT FAN
PF - PROPELLER FAN
CF- CEILING FAN

WHEEL TYPE NOTES:
A - AXIAL
C - CENTRIFUGAL
P - PROPELLER

NOTES:

1. BACKDRAFT DAMPER.
2. CONSTRUCTION A) ALUMINUM FAN BLADES B) STEEL FAN BLADES.

HEATER SCHEDULE:

ACCESSORIES: NONE
TYPE NOTES:
EUHHD - HEAVY-DUTY ELECTRIC UNIT HEATER
GUH - GAS UNIT HEATER
WH - WALL HEATER

NOTES:
1. ENTERING AIR TEMPARATURE-60°F.
2. MANUFACTURER USED AS THE BASIS OF DESIGN IS CHROMALOX.
3. MANUFACTURER USED AS THE BASIS OF DESIGN IS STERLING.

PACKAGED AIR CONDITIONING UNIT/HEAT PUMP SCHEDULE:

ACCESSORIES: NONE

CAPACITY NOTE:
CAPACITIES LISTED IN PARENTHESES ARE IN UNITS OF "KW". CAPACITIES LISTED WITHOUT PARENTHESES ARE IN UNITS OF "BTUH".
OUTDOOR COIL ENTERING AIR TEMPERATURE:
COOLING - 98°F DESIGN/ 0°F MIN
HEATING - 26°F DESIGN (HEAT PUMP)

NOTES:
1. NONE

AIR DEVICE SCHEDULE:

ACCESSORIES: NONE

NOTES:
1. EQIPMENT SCHEDULE MODEL NUMBERS BASED ON TITUS.

NO.	BY	CHK	APP	DATE	REVISIONS AND RECORD OF USE
B	MDS	RWC	LDA	7/30/2019	60% SUBMITTAL

BLACK & VEATCH JOINT VENTURE FILANC BLACK & VEATCH

CITY OF MORRO BAY
MORRO BAY WRF
RECLAMATION FACILITY (WRF)

HVAC SCHEDULE

DESIGNED: SAM
DETAILED: MDS
CHECKED: LDA
APPROVED:
DATE: 7/30/2019

0 1/2 1
IF THIS BAR DOES NOT MEASURE 1" THEN DRAWING IS NOT TO FULL SCALE

PROJECT NO. 400530

00-H-601
SHEET
OF

60% SUBMITTAL - NOT FOR CONSTRUCTION

PLOTTED: 7/30/2019 2:40:08 PM
D400530

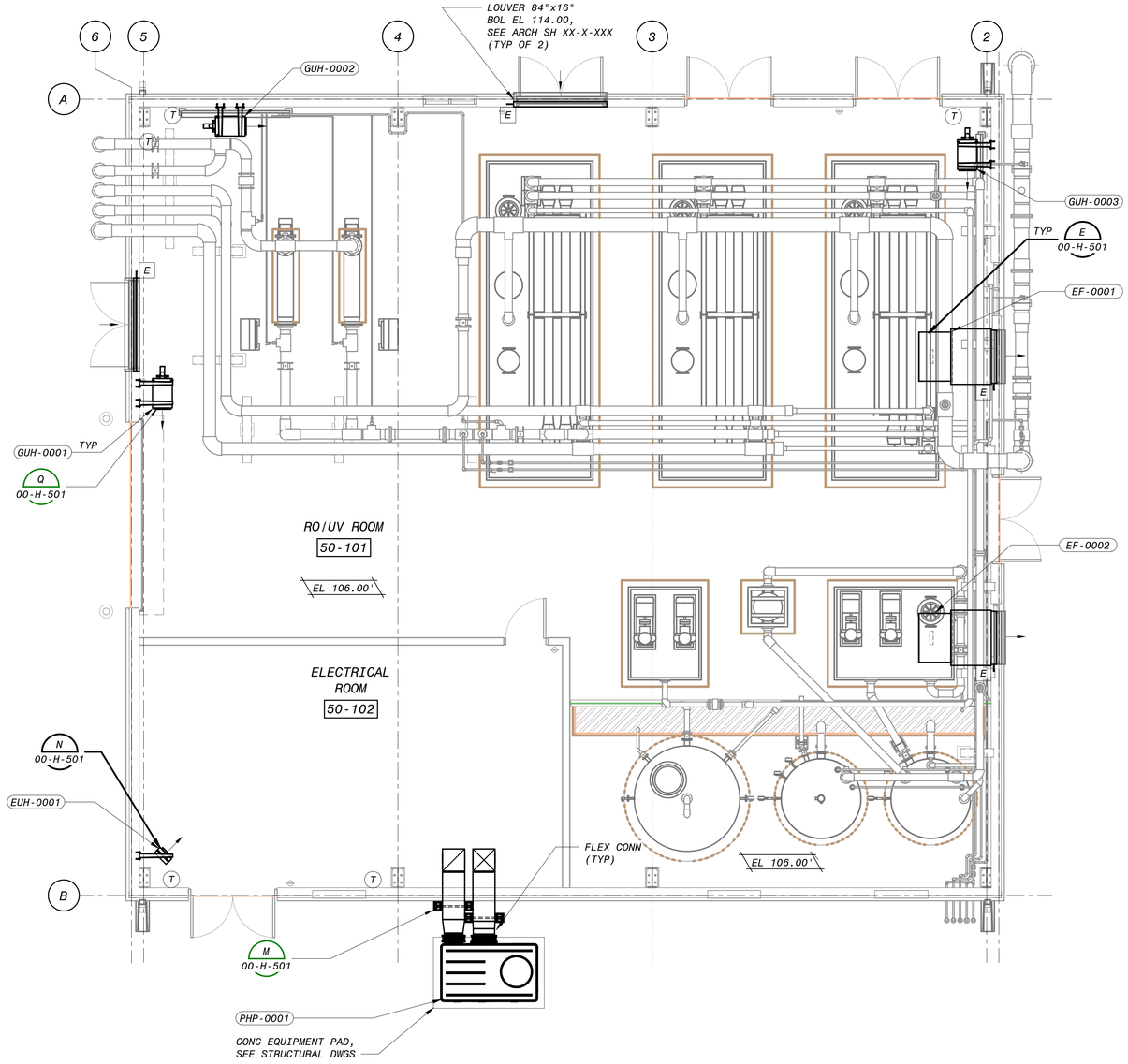

PLAN

3/16" = 1'-0"

6" 4' 2' 0' 5' 10'

3/16" = 1'-0"

60% SUBMITTAL- NOT FOR CONSTRUCTION

NO.	BY	CHK	APP	DATE	REVISIONS AND RECORD OF USE
B	MDS	RWC	AEC	7/30/2019	60% SUBMITTAL

BLACK & VEATCH

JOINT VENTURE

BLACK & VEATCH

FILANC

CITY OF MORRO BAY
MORRO BAY WRF
RECLAMATION FACILITY (WRF)

RO/UV BUILDING
HVAC
PLAN

DESIGNED: SM
DETAILED: MDS
CHECKED: LDA
APPROVED:
DATE: 7/30/2019

0 1/2 1

IF THIS BAR DOES NOT MEASURE 1" THEN DRAWING IS NOT TO FULL SCALE

PROJECT NO.
400530

50-H-101
SHEET
OF

PLOTTED: 7/30/2019 2:09:52 PM
D400530

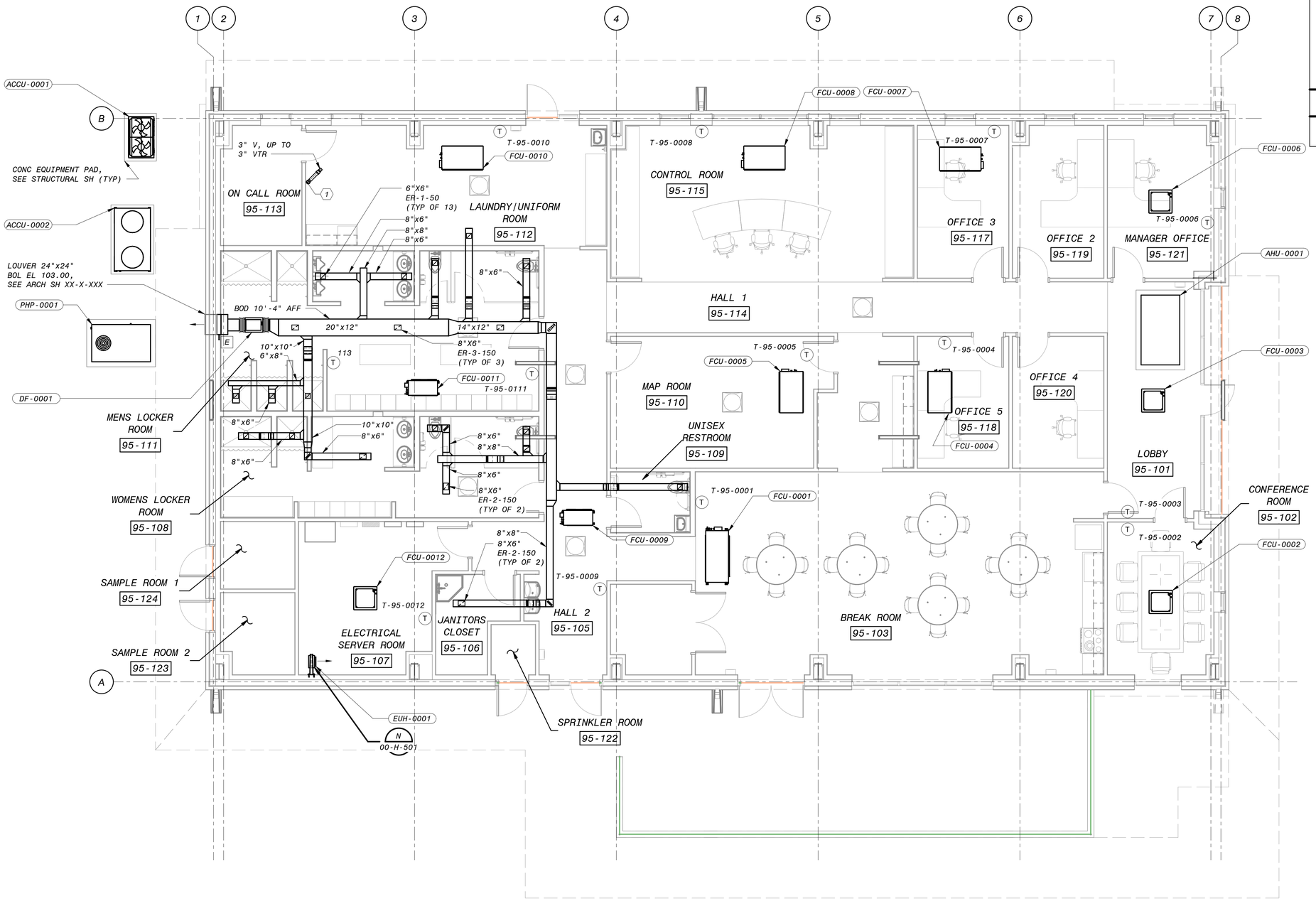

PLAN
3/16" = 1'-0"

SHEET KEYNOTES

1. 3" V, FOR LAUNDRY AREA DRYER.

6" 4' 2' 0' 5' 10'
3/16" = 1'-0"

60% SUBMITTAL- NOT FOR CONSTRUCTION

NO.	BY	CHK	APP	DATE	REVISIONS AND RECORD OF USE
B	MDS	RWC	LDA	7/30/2019	60% SUBMITTAL

BLACK & VEATCH JOINT VENTURE
BLACK & VEATCH
FILANC

CITY OF MORRO BAY
MORRO BAY WRF
RECLAMATION FACILITY (WRF)

OPERATIONS BUILDING
HVAC
PLAN

DESIGNED: SM
DETAILED: MDS
CHECKED: LDA
APPROVED:
DATE: 7/30/2019

0 1/2 1
IF THIS BAR DOES NOT MEASURE 1" THEN DRAWING IS NOT TO FULL SCALE

PROJECT NO.
400530

95-H-101
SHEET
OF

PLOTTED: 7/30/2019 2:18:00 PM
D400530

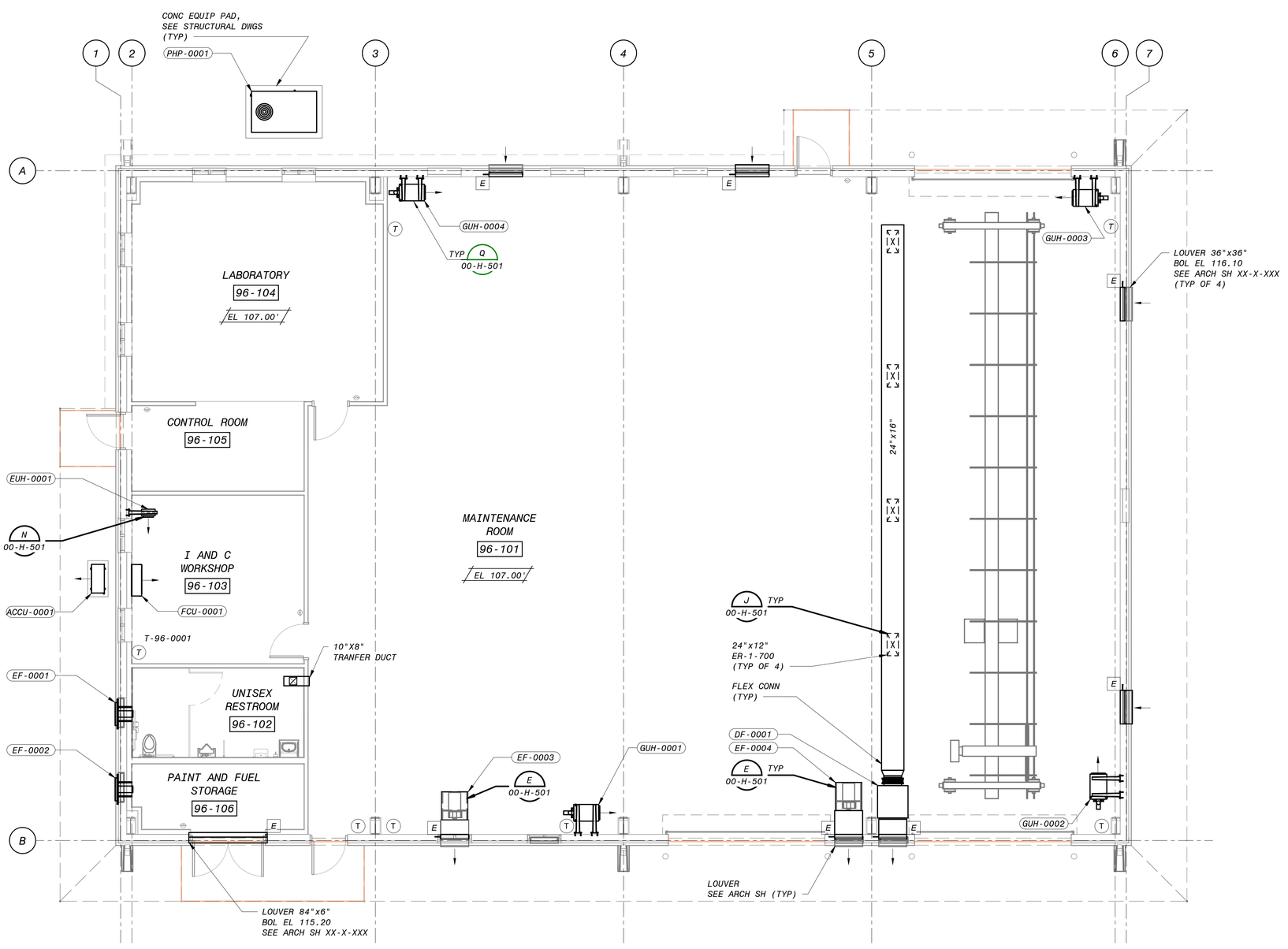

PLAN

3/16" = 1'-0"

6" 4' 2' 0' 5' 10'

3/16" = 1'-0"

60% SUBMITTAL - NOT FOR CONTRUCTION

NO.	BY	CHK	APP	DATE	REVISIONS AND RECORD OF USE
B	MDS	RWC	LDA	7/30/2019	60% SUBMITTAL

BLACK & VEATCH

JOINT VENTURE

FILANC

BLACK & VEATCH

CITY OF MORRO BAY
MORRO BAY WRF
RECLAMATION FACILITY (WRF)

MAINTENANCE BUILDING
HVAC
PLAN

DESIGNED: SM
DETAILED: MDS
CHECKED: LDA
APPROVED:
DATE: 7/30/2019

0 1/2 1

IF THIS BAR DOES NOT MEASURE 1" THEN DRAWING IS NOT TO FULL SCALE

PROJECT NO.
400530

96-H-101
SHEET
OF

PLOTTED: 7/30/2019 2:25:04 PM
D400530

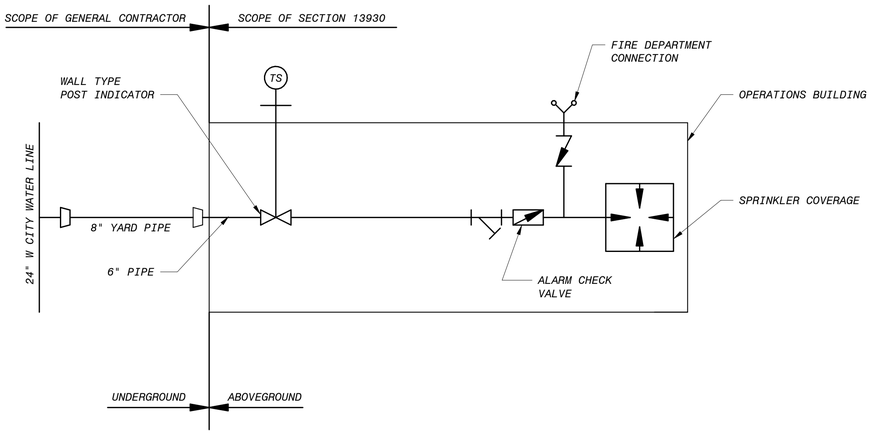

FIRE SUPPRESSION SYSTEM SCHEMATIC

NO SCALE

N

NOTES:

1. WET AUTOMATIC SPRINKLER SYSTEM TO BE DESIGNED AND INSTALLED PER NFPA 13
2. SPRINKLER SYSTEM SHALL BE DESIGNED FOR LIGHT HAZARD OCCUPANCY
3. FIRE DEPARTMENT CONNECTION FOR SPRINKLER SYSTEM WILL BE PROVIDED OUTSIDE OF THE BUILDING
4. SPRINKLER SUBCONTRACTOR SHALL BE RESPONSIBLE FOR EVERYTHING SHOWN ON THIS DWG
5. WATER SUPPLY TO BUILDING SPRINKLER RISER LOCATION WILL BE PROVIDED BY GENERAL CONTRACTOR. A FLANGED 6 INCH DUCTILE IRON CEMENT LINED PIPE (CLASS 350) CONNECTION 1 FT ABOVE FINISHED GRADE WILL BE PROVIDED BY GENERAL CONTRACTOR
6. FIRE CONTROL PANEL (FACP), SMOKE DETECTION, AND NOTIFICATION DEVICES TO BE INSTALLED BY OTHERS IN ACCORDANCE WITH NFPA 72.
7. WALL PENETRATION BY FIRE PROTECTION SYSTEM SHALL MAINTAIN FIRE RATING OF THE PENETRATED WALL PER ACCEPTED UL UL RATED SYSTEM.
8. WALL TYPE POST INDICATOR VALVE UPSTREAM OF SPRINKLER ALARM VALVE INSIDE THE BUILDING SHALL BE PROVIDED BY SPRINKLER SUBCONTRACTOR.

NO.	BY	CHK	APP	DATE	REVISIONS AND RECORD OF USE
A	TA	RWC	RWC		60% SUBMITTAL

BLACK & VEATCH

JOINT VENTURE

FILANC

BLACK & VEATCH

CITY OF MORRO BAY
MORRO BAY WRF
RECLAMATION FACILITY (WRF)

OPERATIONS BUILDING
FIRE SUPPRESSION SYSTEM
SCHEMATIC

DESIGNED: TA
DETAILED: BAR
CHECKED: RWC
APPROVED: RWC
DATE:

0 1/2 1

IF THIS BAR DOES NOT MEASURE 1" THEN DRAWING IS NOT TO FULL SCALE

PROJECT NO.
400530

95-F-001

SHEET
OF XXX

60% SUBMITTAL - NOT FOR CONSTRUCTION

PLOTTED: 7/12/2019 7:21:49 AM
D400530

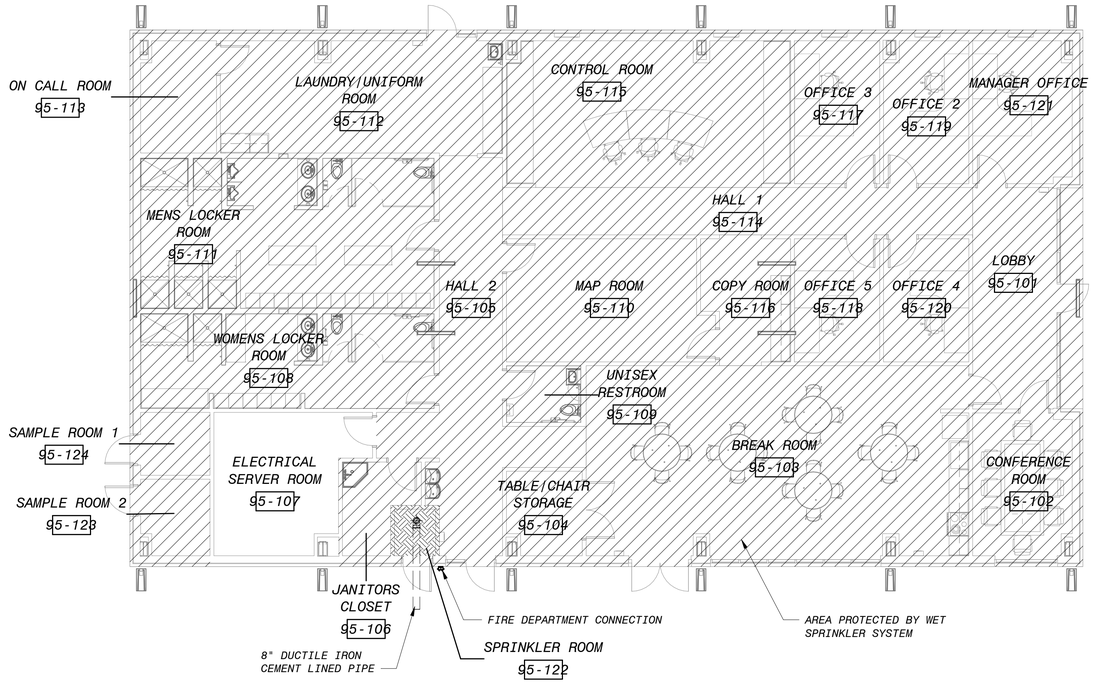

FIRE SUPPERSSION SYSTEM PLAN

1/8" = 1'-0"

NOTES:

1. WET AUTOMATIC SPRINKLER SYSTEM TO BE DESIGNED AND INSTALLED PER NFPA 13
2. SPRINKLER SYSTEM SHALL BE DESIGNED FOR LIGHT HAZARD OCCUPANCY
3. FIRE DEPARTMENT CONNECTION FOR SPRINKLER SYSTEM WILL BE PROVIDED OUTSIDE OF THE BUILDING
4. SPRINKLER SUBCONTRACTOR SHALL BE RESPONSIBLE FOR EVERYTHING SHOWN ON THIS DWG
5. WATER SUPPLY TO BUILDING SPRINKLER RISER LOCATION WILL BE PROVIDED BY GENERAL CONTRACTOR. A FLANGED 6 INCH DUCTILE IRON CEMENT LINED PIPE (CLASS 350) CONNECTION 1 FT ABOVE FINISHED GRADE WILL BE PROVIDED BY GENERAL CONTRACTOR
6. FIRE CONTROL PANEL (FACP), SMOKE DETECTION, AND NOTIFICATION DEVICES TO BE INSTALLED BY OTHERS IN ACCORDANCE WITH NFPA 72.
7. WALL PENETRATION BY FIRE PROTECTION SYSTEM SHALL MAINTAIN FIRE RATING OF THE PENETRATED WALL PER ACCEPTED UL UL RATED SYSTEM.
8. WALL TYPE POST INDICATOR VALVE UPSTREAM OF SPRINKLER ALARM VALVE INSIDE THE BUILDING SHALL BE PROVIDED BY SPRINKLER SUBCONTRACTOR.

NO.	BY	CHK	APP	DATE	REVISIONS AND RECORD OF USE
A	TA	RWC	RWC		60% SUBMITTAL

BLACK & VEATCH JOINT VENTURE

BLACK & VEATCH

FILANC

CITY OF MORRO BAY
MORRO BAY WRF
RECLAMATION FACILITY (WRF)

OPERATIONS BUILDING
FIRE SUPRESSION SYSTEM
PLAN

DESIGNED: TA
DETAILED: BAR
CHECKED: RWC
APPROVED: RWC
DATE:

0 1/2 1

IF THIS BAR DOES NOT MEASURE 1" THEN DRAWING IS NOT TO FULL SCALE

PROJECT NO.
400530

95-F-101
SHEET
95-F-301 OF XXX

60% SUBMITTAL - NOT FOR CONSTRUCTION

PLOTTED: 7/12/2019 7:21:52 AM
D400530

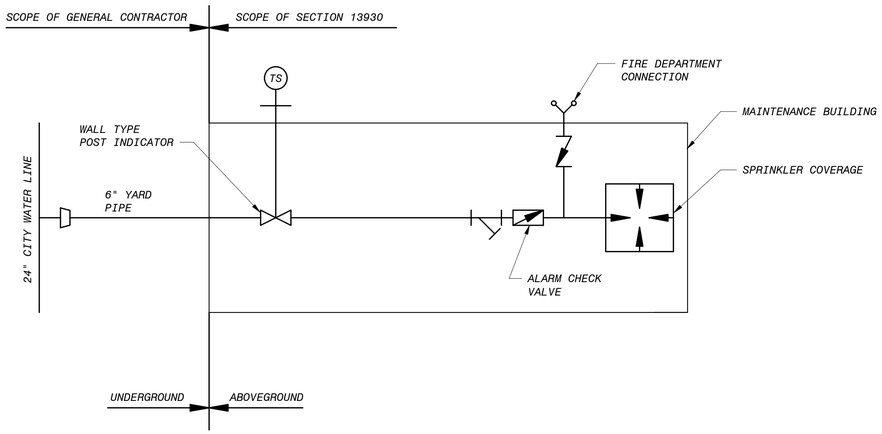

SCHEMATIC OF FIRE SUPPRESSION SYSTEM

NO SCALE

NOTES:

1. WET AUTOMATIC SPRINKLER SYSTEM TO BE DESIGNED AND INSTALLED PER NFPA 13
2. SPRINKLER SYSTEM SHALL BE DESIGNED FOR ORDINARY HAZARD GROUP 2 OCCUPANCY
3. FIRE DEPARTMENT CONNECTION FOR SPRINKLER SYSTEM WILL BE PROVIDED OUTSIDE OF THE BUILDING
4. SPRINKLER SUBCONTRACTOR SHALL BE RESPONSIBLE FOR EVERYTHING SHOWN ON THIS DWG
5. WATER SUPPLY TO BUILDING SPRINKLER RISER LOCATION WILL BE PROVIDED BY GENERAL CONTRACTOR. A FLANGED 6 INCH DUCTILE IRON CEMENT LINED PIPE (CLASS 350) CONNECTION 1 FT ABOVE FINISHED GRADE WILL BE PROVIDED BY GENERAL CONTRACTOR
6. FIRE CONTROL PANEL (FACP), SMOKE DETECTION, AND NOTIFICATION DEVICES TO BE INSTALLED BY OTHERS IN ACCORDANCE WITH NFPA 72.
7. WALL PENETRATION BY FIRE PROTECTION SYSTEM SHALL MAINTAIN FIRE RATING OF THE PENETRATED WALL PER ACCEPTED UL RATED SYSTEM.
8. WALL TYPE POST INDICATOR VALVE UPSTREAM OF SPRINKLER ALARM VALVE INSIDE THE BUILDING SHALL BE PROVIDED BY SPRINKLER SUBCONTRACTOR.

NO.	BY	CHK	APP	DATE	REVISIONS AND RECORD OF USE
A	TA	RWC	RWC		60% SUBMITTAL

BLACK & VEATCH JOINT VENTURE BLACK & VEATCH FILANC

CITY OF MORRO BAY
MORRO BAY WRF
RECLAMATION FACILITY (WRF)

MAINTENANCE BUILDING
FIRE SUPPRESSION SYSTEM
SCHEMATIC

DESIGNED: TA
DETAILED: BAR
CHECKED: RWC
APPROVED: RWC
DATE:

0 1/2 1
IF THIS BAR DOES NOT MEASURE 1" THEN DRAWING IS NOT TO FULL SCALE

PROJECT NO.
400530

96-F-001
SHEET
OF XXX

60% SUBMITTAL - NOT FOR CONSTRUCTION

PLOTTED: 7/11/2019 8:42:21 AM
D400530

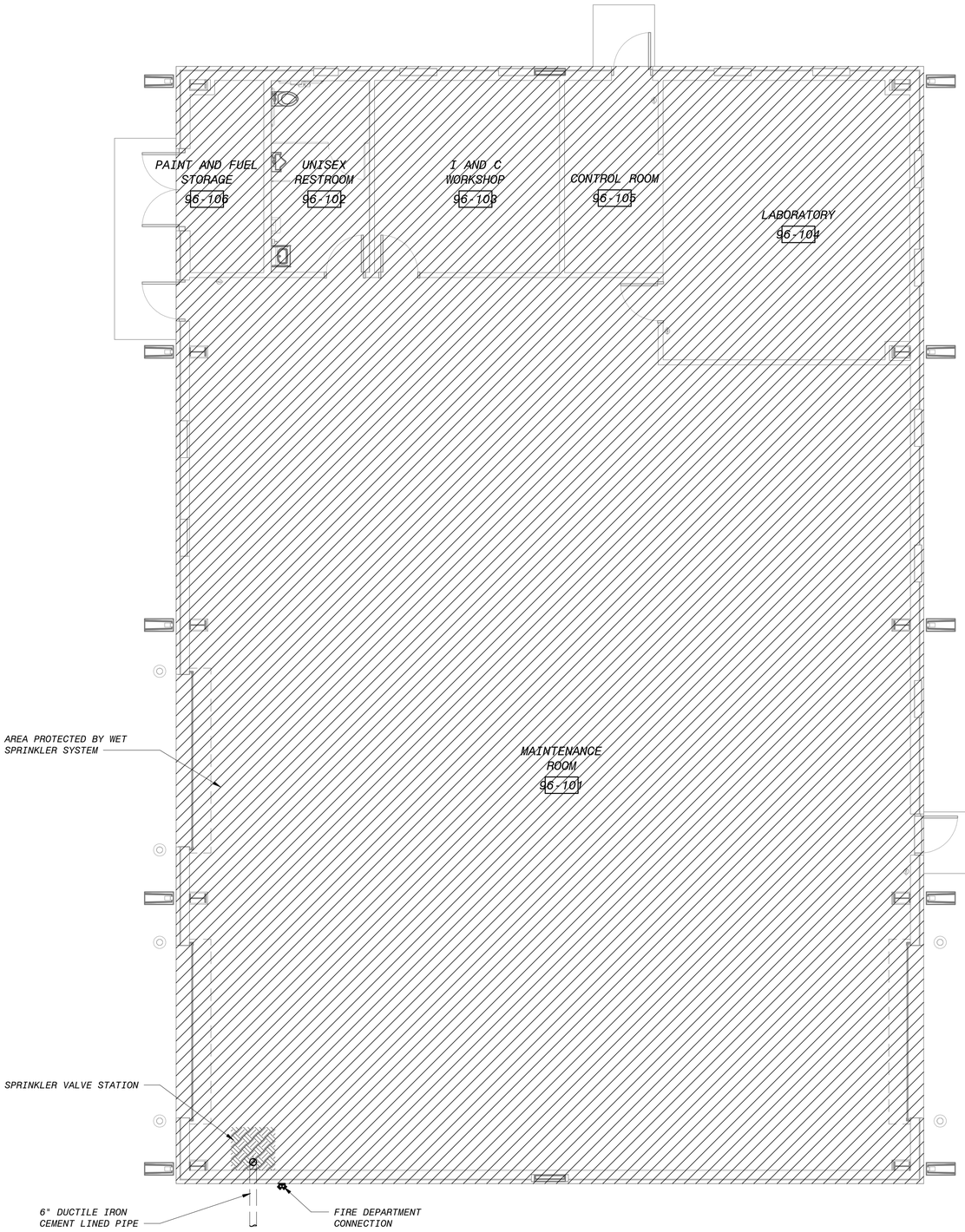

FIRE SUPPRESSION SYSTEM PLAN

3/16" = 1'-0"

NOTES:

1. WET AUTOMATIC SPRINKLER SYSTEM TO BE DESIGNED AND INSTALLED PER NFPA 13
2. SPRINKLER SYSTEM SHALL BE DESIGNED FOR ORDINARY HAZARD GROUP 2 OCCUPANCY
3. FIRE DEPARTMENT CONNECTION FOR SPRINKLER SYSTEM WILL BE PROVIDED OUTSIDE OF THE BUILDING
4. SPRINKLER SUBCONTRACTOR SHALL BE RESPONSIBLE FOR EVERYTHING SHOWN ON THIS DWG
5. WATER SUPPLY TO BUILDING SPRINKLER RISER LOCATION WILL BE PROVIDED BY GENERAL CONTRACTOR. A FLANGED 6 INCH DUCTILE IRON CEMENT LINED PIPE (CLASS 350) CONNECTION 1 FT ABOVE FINISHED GRADE WILL BE PROVIDED BY GENERAL CONTRACTOR
6. FIRE CONTROL PANEL (FACP), SMOKE DETECTION, AND NOTIFICATION DEVICES TO BE INSTALLED BY OTHERS IN ACCORDANCE WITH NFPA 72.
7. WALL PENETRATION BY FIRE PROTECTION SYSTEM SHALL MAINTAIN FIRE RATING OF THE PENETRATED WALL PER ACCEPTED UL RATED SYSTEM.
8. WALL TYPE POST INDICATOR VALVE UPSTREAM OF SPRINKLER ALARM VALVE INSIDE THE BUILDING SHALL BE PROVIDED BY SPRINKLER SUBCONTRACTOR.

NO.	BY	CHK	APP	DATE	REVISIONS AND RECORD OF USE
A	TA	RWC	RWC		60% SUBMITTAL

BLACK & VEATCH JOINT VENTURE — FILANC — BLACK & VEATCH

CITY OF MORRO BAY
MORRO BAY WRF
RECLAMATION FACILITY (WRF)

MAINTENANCE BUILDING
FIRE SUPRESSION SYSTEM
PLAN

DESIGNED: TA
DETAILED: BAR
CHECKED: RWC
APPROVED: RWC
DATE:

0 1/2 1
IF THIS BAR DOES NOT MEASURE 1" THEN DRAWING IS NOT TO FULL SCALE

PROJECT NO.
400530

96-F-101
SHEET
OF XXX

60% SUBMITTAL - NOT FOR CONSTRUCTION

PLOTTED: 7/11/2019 8:42:22 AM
D400530

ONE-LINE DIAGRAM LEGEND

1500KVA
2.4KV Δ - 480Y/277V
3%Z, 60HZ
TRANSFORMER WITH PRIMARY AND SECONDARY VOLTAGE, AND KVA RATING AS NOTED

CS, 4#14,3/4", 20, 3P-60, 22:3#8,#10G, 4#14,2"
CIRCUIT NO.22 WITH #8 INSULATED CONDUCTORS AND 1#10 GROUND WIRE FOR A 20HP MOTOR WITH 3 POLE, 60A, MOTOR DISCONNECT SWITCH AND #14 INSULATED CONDUCTORS FOR AUXILIARY ITEM, AS FOR EXAMPLE A CONTROL STATION, ALL IN 2" CONDUIT.

AUXILIARY ITEMS MAY NOT BE COMPLETELY SHOWN
HS, 20, 3P-60, 22:3#8,#10G, 4#14,2"
CONDUCTORS FOR AUXILIARY ITEM SHALL NOT PASS THROUGH MOTOR DISCONNECT SWITCH.

AUXILIARY ITEMS MAY NOT BE COMPLETELY SHOWN
15
ONE-LINE SHOWING POWER AND CONTROL TO A PACKAGE UNIT, AS FOR EXAMPLE A STEAM GENERATOR OR AN AIR HANDLING UNIT, SHALL IMPLY THAT ANY AND ALL ASSOCIATED EQUIPMENT SHALL ALSO BE INSTALLED AND WIRED AS REQUIRED BY THE EQUIPMENT FURNISHED.

INDICATES THAT ALL OR PART OF CIRCUIT MAY BE ROUTED IN DUCT BANK OR UNDERGROUND. CONDUIT SIZE SHOWN ON ONE-LINE IS ABOVE GROUND AND/OR INSIDE OF STRUCTURE. SEE DUCT BANK SCHEDULE AND SECTIONS FOR CONDUIT SIZE OF UNDERGROUND PORTION OF CIRCUIT.

HIGH VOLTAGE DRAWOUT AIR OR VACUUM CIRCUIT BREAKER

3P-20
LOW VOLTAGE AIR CIRCUIT BREAKER, 3 POLE, 20 AMPERE

S4
SIZE 4 COMBINATION MAGNETIC MOTOR STARTER

LOW VOLTAGE DRAWOUT AIR CIRCUIT BREAKER

HIGH VOLTAGE DRAWOUT CONTACTOR

FUSE AND DISCONNECT SWITCH

S2
SIZE 2 COMBINATION MAGNETIC MOTOR STARTER, REVERSING OR 2 SPEED

S1
SIZE 1 COMBINATION REDUCED VOLTAGE AUTOTRANSFORMER

POTENTIAL TRANSFORMER

CURRENT TRANSFORMER

CURRENT OR POTENTIAL TEST SWITCH

G — GENERATOR

K — KIRK KEY INTERLOCK

E — ELECTRICAL INTERLOCK

R — RESISTOR

59G — PROTECTION RELAY WITH IEEE DEVICE FUNCTION AS SHOWN

V — SINGLE-FUNCTION METER

SURGE OR LIGHTNING ARRESTER

SURGE ARRESTER WITH SURGE CAPACITOR

GROUND CONNECTION

CABLE BUS

SCHEMATIC SYMBOLS

- WIRE CONNECTION POINT
- EXTERNAL CONNECTION POINT
- NORMALLY OPEN CONTACT
- NORMALLY CLOSED CONTACT
- STARTER, CONTACTOR OR RELAY COIL
- NORMALLY OPEN PUSH BUTTON
- NORMALLY CLOSED PUSH BUTTON
- MAINTAINED PUSH BUTTON
- NORMALLY CLOSED GEARED LIMIT SWITCH
- NORMALLY OPEN GEARED LIMIT SWITCH
- INDICATING LIGHT
- INDICATING LIGHT WITH PUSH-TO-TEST
- FUSE
- POTENTIOMETER
- CAPACITOR
- DIODE
- RESISTOR
- CONTROL POWER TRANSFORMER
- SWITCH
- MS — MANUAL STARTER
- OL — OVERLOAD
- OVERLOAD
- ELECTRODE
- FLOAT SWITCH (CLOSING ON RISING LEVEL)
- FLOAT SWITCH (OPENING ON RISING LEVEL)
- P — PRESSURE SWITCH (CLOSING ON RISING PRESSURE)
- P — PRESSURE SWITCH (OPENING ON RISING PRESSURE)
- V — VACUUM SWITCH (CLOSING ON INCREASING VACUUM)
- V — VACUUM SWITCH (OPENING ON INCREASING VACUUM)
- TEMPERATURE SWITCH (CLOSING ON RISING TEMPERATURE)
- TEMPERATURE SWITCH (OPENING ON RISING TEMPERATURE)
- FLOW ACTUATED SWITCH (CLOSING ON INCREASE IN FLOW)
- FLOW ACTUATED SWITCH (OPENING ON INCREASE IN FLOW)
- ON TIME DELAY CONTACT (NORMALLY OPEN, WHEN THE COIL IS ENERGIZED THE CONTACT WILL CLOSE AFTER A TIME DELAY)
- ON TIME DELAY CONTACT (NORMALLY CLOSED, WHEN THE COIL IS ENERGIZED THE CONTACT WILL OPEN AFTER A TIME DELAY)
- OFF TIME DELAY CONTACT (NORMALLY OPEN, WHEN THE COIL IS DE-ENERGIZED THE CONTACT WILL OPEN AFTER A TIME DELAY)
- OFF TIME DELAY CONTACT (NORMALLY CLOSED, WHEN THE COIL IS DE-ENERGIZED THE CONTACT WILL CLOSE AFTER A TIME DELAY)
- TORQUE SWITCH (NORMALLY OPEN)
- TORQUE SWITCH (NORMALLY CLOSED)
- LIMIT SWITCH (NORMALLY OPEN)
- LIMIT SWITCH (NORMALLY OPEN, HELD CLOSED)
- LIMIT SWITCH (NORMALLY CLOSED)
- LIMIT SWITCH (NORMALLY CLOSED, HELD OPEN)
- DIFFERENTIAL PRESSURE SWITCH (NORMALLY OPEN, CLOSING ON INCREASING DIFF.)
- DIFFERENTIAL PRESSURE SWITCH (NORMALLY CLOSED, OPENING ON INCREASING DIFF.)

SWITCH & OUTLET SYMBOLS

- S — SINGLE POLE SWITCH
- S_2 — TWO POLE SWITCH
- S_{3A} — THREE-WAY SWITCH CONTROLLING LIGHTS WITH "A" DESIGNATION
- S_4 — FOUR-WAY SWITCH
- S_M^{C1} — MOMENTARY SWITCH CONTROLLING CONTACTOR C1
- DUPLEX RECEPTACLE 120 VOLT
- SIMPLEX RECEPTACLE
- RANGE RECEPTACLE
- TWISTLOCK RECEPTACLE
- 30 — 240V, 1Ø RECEPTACLE, TYPICAL AMPERE RATING NOTED
- 60 — 480V, 3Ø WELDING RECEPTACLE, TYPICAL AMPERE RATING NOTED
- 120 VOLT DUPLEX RECEPTACLE (UPS)
- DUPLEX FLOOR OUTLET
- TELEPHONE OUTLET
- TELEPHONE FLOOR OUTLET
- CX — COAXIAL CABLE OUTLET
- DATA NETWORK OUTLET
- CAM TYPE RECEPTACLES
- CABLES WITH CAM TYPE PLUGS

MISCELLANEOUS SYMBOLS

- STROBE
- HORN & STROBE
- HORN
- T — THERMOSTAT
- J — JUNCTION BOX
- GROUND ROD
- GROUND ROD WITH TEST WELL
- GROUND CONNECTION
- DISCONNECT SWITCH
- COMBINATION STARTER
- POWER PANEL
- LIGHTING PANEL
- MISCELLANEOUS PANEL
- LIGHTING CONTACTOR
- CAMERA
- GLASS BREAK DETECTOR

BREAKER DETAILS

DETAIL A

52 — 5KV, 1200A, 49KA
A 5KV CLASS MEDIUM-VOLTAGE, DRAWOUT, VACUUM OR AIR INSULATED CIRCUIT BREAKER WITH A 1,200 AMPERE FRAME. BREAKER HAS A 49,000 AMPERE MAXIMUM FAULT CURRENT INTERRUPTING RATING.

DETAIL B

3P 50
A LOW VOLTAGE FIXED MOUNTED MOLDED CASE CIRCUIT BREAKER WITH A 50 AMPERE TRIP RATING.TRIP UNIT IS NON-ADJUSTABLE THERMAL-MAGNETIC TYPE.

1000AT, 1200AF, SST, LSIG, AFRD
A LOW VOLTAGE FIXED MOUNTED MOLDED CASE CIRCUIT BREAKER WITH A 1200 AMPERE FRAME AND A 1000 AMPERE TRIP RATING. TRIP UNIT IS ADJUSTABLE SOLID-STATE TYPE WITH LONG-TIME, SHORT-TIME, INSTANTANEOUS, GROUND FAULT AND ARC-FLASH REDUCTION PROTECTION FEATURES.

DETAIL C

800AT, 1000AS, 1600AF, AFRD
A LOW VOLTAGE, DRAWOUT, POWER OR INSULATED CASE CIRCUIT BREAKER WITH A 1600A FRAME AND SOLID-STATE TRIP UNIT. TRIP UNIT HAS A SENSOR MODULE RATED FOR 1000 AMPERES AND WITH A TRIP RATING OF 800 AMPERES AND ARC-FLASH REDUCTION PROTECTION FEATURES.

CONDUIT & WIRING INSTALLATION LEGEND

- CONDUIT EXPOSED
- CONDUIT CONCEALED
- CONDUIT TURNING UP. CONDUIT TURNING DOWN.
- CONDUIT PLUGGED FLUSH. CONDUIT CAPPED.
- L2 - 5 — TYPICAL FOR HOME RUN TO BE ROUTED TO LIGHTING PANEL L2 & CONNECTED TO CIRCUIT #5 (MINIMUM NO. 12 AWG CONDUCTORS AND 3/4" CONDUIT)
- A — LIGHTING FIXTURE. REFER TO NUMBER OR LETTER IN FIXTURE SCHEDULE
- 11 — LINEAR FIXTURE. REFER TO NUMBER OR LETTER IN FIXTURE SCHEDULE.
- LP1-3 — RECEPTACLE POWERED FROM LIGHTING PANEL LP1, CIRCUIT 3
- A LP2-2 — LIGHTING FIXTURE POWERED FROM LIGHTING PANEL LP2, CIRCUIT 2 (NON-SWITCHED)
- LPA-4 A / 11 — LIGHTING FIXTURE POWERED FROM LIGHTING PANEL LPA, CIRCUIT 4, VIA SWITCH A
- E — UNDERGROUND CONCRETE ENCASED ELECTRICAL DUCT BANK
- UNDERGROUND CONCRETE ENCASED ELECTRICAL BANK ROUTED BENEATH SLAB-ON-GRADE
- EE — DIRECT BURIED CONDUIT
- GROUND CONDUCTOR
- UE — UE — UNDERGROUND ELECTRIC
- OH — OH — OVERHEAD CIRCUIT

COMMUNICATION SYMBOLS

- HORN SPEAKER
- DUAL HORN SPEAKER
- WALL MOUNTED CONE SPEAKER
- SK — CEILING MOUNTED CONE SPEAKER

PROTECTION/RELAY DEVICE NUMBERS

25 - SYNCHRONIZING OR SYNCHRONISM-CHECK DEVICE
27 - UNDERVOLTAGE RELAY
32 - DIRECTIONAL POWER RELAY
37 - UNDERCURRENT OR UNDERPOWER RELAY
46 - REV. PHASE OR PHASE-BAL. CURRENT RELAY
47 - PHASE SEQ. OR PHASE BAL. VOLTAGE RELAY
49 - MACHINE OR TRANSFORMER THERMAL RELAY
50 - INSTANTANEOUS OVERCURRENT
51 - AC TIME OVERCURRENT RELAY
52 - AC CIRCUIT BREAKER
59 - OVERVOLTAGE RELAY
63 - PRESSURE SWITCH
64 - GROUND DETECTOR RELAY
67 - AC DIRECTIONAL OVERCURRENT RELAY
71 - LIQUID OR GAS LEVEL RELAY
81 - FREQUENCY RELAY
83 - AUTOMATIC SELECTIVE CONTROL OR TRANSFER RELAY
86 - LOCKOUT RELAY
87 - DIFFERENTIAL PROTECTIVE RELAY

CONTROL SCHEMATIC LEGEND

- PS — FIRE ALARM PULL STATION
- F — FIRE ALARM HORN/STROBE LIGHT
- F — FIRE ALARM BEACON
- S — FIRE ALARM STROBE LIGHT
- SD — FIRE ALARM SYSTEM SMOKE DETECTOR
- HT — FIRE ALARM SYSTEM HEAT SENSOR
- SFS — FIRE ALARM SYSTEM SPRINKLER FLOW SWITCH
- STS — FIRE ALARM SYSTEM SPRINKLER TAMPER SWITCH
- SPS — FIRE ALARM SYSTEM SPRINKLER PRESSURE SWITCH
- FACP — FIRE ALARM CONTROL PANEL
- FAAP — FIRE ALARM ANNUNCIATOR PANEL
- FATC# — FIRE ALARM TERMINAL CABINET
- DSD — FIRE ALARM SYSTEM DUCT SMOKE DETECTOR
- PIV — FIRE ALARM SYSTEM POST INDICATOR VALVE SWITCH
- PET — PHOTO ELECTRIC BEAM TRANSMITTER (SECURITY SYSTEM). ARROW INDICATES DIRECTION OF BEAM.
- PER — PHOTO ELECTRIC BEAM RECEIVER. (SECURITY SYSTEM). ARROW INDICATES DIRECTION OF BEAM.
- SSCP — SECURITY SYSTEM CONTROL PANEL
- MS — MOTION SENSOR
- CS — CONTACT SWITCH (DOOR)
- DS — DOOR SWITCH
- KC — CARD READER

NO.	BY	CHK	APP	DATE	REVISIONS AND RECORD OF USE
B	JSL	MJK	EVB	7/30/2019	60% SUBMITTAL
A	AM	MJK	EVB	3/5/2019	30% SUBMITTAL

BLACK & VEATCH
JOINT VENTURE
BLACK & VEATCH
FILANC

CITY OF MORRO BAY
MORRO BAY WRF
RECLAMATION FACILITY (WRF)

GENERAL ELECTRICAL LEGENDS

DESIGNED: JSL
DETAILED: SBC
CHECKED:
APPROVED:
DATE:

0 1/2 1
IF THIS BAR DOES NOT MEASURE 1" THEM DRAWING IS NOT TO FULL SCALE

PROJECT NO.
400530

00-E-001
SHEET
OF

60% SUBMITTAL - NOT FOR CONSTRUCTION

F09000A
D400530
PLOTTED: 7/30/2019 1:07 AM FILE: C:\PWBatchPDF\Process\400530 - Morro Bay WRF\400530-00-E-001.dwg

ELECTRICAL GENERAL NOTES

1. SOLID LINES (————————) INDICATE NEW WORK OR EQUIPMENT.
2. SCREENED LINES (————————) INDICATE EXISTING WORK OR EQUIPMENT.
3. DASHED LINES (– – – – – – – –) INDICATE FUTURE WORK OR EQUIPMENT.
4. REFER TO INDIVIDUAL DISCIPLINE CONTRACT DRAWINGS FOR ADDITIONAL ABBREVIATIONS, DETAILS, AND GENERAL DESIGN NOTES.
5. LEGEND SHEETS ARE GENERAL. SOME SYMBOLS AND ABBREVIATIONS MAY NOT BE UTILIZED ON THIS SPECIFIC PROJECT.
6. INFORMATION RELATED TO CIRCUIT IDENTIFICATION, WIRE & CONDUIT SIZES, AND ROUTING, IS ON THE FOLLOWING DRAWING TYPES.
   - A. ONE-LINE DIAGRAMS SHOW CIRCUIT IDENTIFICATION, WIRE QUANTITY AND SIZES, AND CONDUIT SIZE WITHIN STRUCTURES. ONE-LINE DIAGRAMS ALSO INDICATE ORIGIN AND DESTINATION OF CIRCUITS, AND IDENTIFY CIRCUITS ROUTED UNDERGROUND.
   - B. FOR CIRCUITS WITHOUT UNDERGROUND PORTIONS, BUILDING FLOOR PLANS SHOW LOCATION OF EQUIPMENT FOR DETERMINING CIRCUIT LENGTH WITHIN THE STRUCTURE. FOR CIRCUITS WITH UNDERGROUND PORTIONS, ANTICIPATED PENETRATION OF UNDERGROUND CONDUITS ARE SHOWN ON STRUCTURE PLANS FOR DETERMINING THE LENGTH OF THE IN-STRUCTURE PORTIONS OF CIRCUITS. BUILDING FLOOR PLANS MAY ALSO SHOW HOME RUNS FOR LIGHTING, RECEPTACLE, AND OTHER MISCELLANEOUS EQUIPMENT CIRCUITS.
   - C. SITE PLANS INDICATE THE GENERAL ROUTING OF UNDERGROUND CONDUITS AND DUCT BANKS. CIRCUITS ROUTED IN UNDERGROUND CONDUITS OR DUCT BANKS ARE INDICATED IN DUCT BANK SECTIONS REFERENCED ON THE SITE PLAN.
   - D. DUCT BANK SECTIONS AND SCHEDULES IDENTIFY CONDUIT SIZE, CONDUIT MATERIAL, ARRANGEMENT OF THE UNDERGROUND CONDUITS, AND CIRCUITS ROUTED IN EACH UNDERGROUND CONDUIT.

AREA DESIGNATIONS

THE SPECIAL AREA DESIGNATION BOXES, AS DEFINED BELOW, ARE LOCATED ON THE PLAN DRAWINGS TO DEFINE ELECTRICAL INSTALLATION REQUIREMENTS. DESIGNATION BOXES ARE LOCATED WITHIN ROOM OR BELOW ROOM NUMBER. ALL INDOOR AREAS NOT INDICATED OTHERWISE ARE AREA TYPE 1 AND MINIMUM NEMA TYPE 1 ENCLOSURES.

NEMA 3R	INTENDED FOR OUTDOOR USE, PROVIDES A DEGREE OF PROTECTION AGAINST FALLING RAIN AND ICE FORMATION. MEETS ROD ENTRY, RAIN, EXTERNAL ICING AND RUST RESISTANCE DESIGN TESTS.
NEMA 4X	CORROSIVE CHEMICAL FEED AND STORAGE ROOMS. CONDUIT SYSTEM SHALL BE EXPOSED SCHEDULE 80 PVC RIGID NON-METALLIC CONDUIT WITH PVC FITTINGS, BOXES AND ACCESSORIES.
NEMA 4	INDOOR WET LOCATIONS SUCH AS VAULTS, HOSEDOWN AREAS, BASEMENTS, ETC. MINIMUM NEMA TYPE 4 ENCLOSURE FOR EQUIPMENT AND GASKETED FITTINGS IN A CONDUIT SYSTEM.
NEMA 7A	CLASS I, DIVISION 1 AREA AS DEFINED BY NEC. ALL EQUIPMENT AND CONDUIT SYSTEMS SHALL BE RATED FOR USE IN THIS AREA.
NEMA 7B	CLASS I, DIVISION 2, GROUP C AND D (METHANE, GASOLINE) AS DEFINED BY NEC. EQUIPMENT AND CONDUITS SYSTEMS SHALL BE RATED FOR USE IN THIS AREA.
NEMA 12	INDOOR, DRY, DIRTY AREA. REQUIRES MINIMUM NEMA TYPE 12 GASKETED ENCLOSURES FOR ALL EQUIPMENT AND GASKETED FITTINGS IN CONDUIT SYSTEMS.

GENERAL REQUIREMENTS

1. THE SUBCONTRACTOR SHALL BE RESPONSIBLE FOR ROUTING ALL CONDUITS NOT SHOWN ON THE PLANS. THIS SHALL INCLUDE ALL CONDUITS SHOWN ON THE ONE-LINES AND HOME-RUNS SHOWN ON THE PLAN DRAWINGS. CONDUITS SHALL BE ROUTED AS DEFINED IN THE SPECIFICATION. CONDUITS SHALL BE PROVIDED BETWEEN THE CABLE TRAYS AND THE EQUIPMENT.
2. SPARE WIRES SHALL BE TAPED AND COILED AND LABELED TO INDICATE WHERE OTHER END OF SPARE WIRE IS LOCATED.
3. IF EQUIPMENT SUPPLIED BY MANUFACTURER HAS A LARGER LOAD THAN VALUE SHOWN, THE SUBCONTRACTOR SHALL ENLARGE THE CABLE CONDUIT AND ELECTRICAL EQUIPMENT, AS REQUIRED, TO ACCOMMODATE THE HIGHER VALUE.
4. THE SUBCONTRACTOR SHALL BE RESPONSIBLE FOR FURNISHING PROPERLY SIZED STARTER OVERLOADS FOR EQUIPMENT FURNISHED.
5. LIGHTING AND RECEPTACLE CIRCUITS DESIGNATED ON THE FLOOR PLANS ARE NOT SHOWN ON THE ONE-LINES. CONDUCTORS FOR LIGHTING, RECEPTACLES, AND MISCELLANEOUS 120VAC CIRCUITS SHALL BE MINIMUM NO. 12AWG. CONDUIT FOR LIGHTING, RECEPTACLES, AND MISCELLANEOUS 120VAC CIRCUITS SHALL BE MINIMUM 3/4".
6. IN AREAS WHERE THERE ARE OVERHEAD BRIDGE CRANES, HOISTS, ETC. NO CONDUITS SHALL BE RUN OVERHEAD THAT WILL INTERFERE WITH THE OPERATION OF THE EQUIPMENT.
7. THE SUBCONTRACTOR SHALL BE RESPONSIBLE FOR COORDINATING WITH OTHER SUBCONTRACTORS AND WITH THE EQUIPMENT FOR THE FINAL DUCKBANK CONDUIT STUBUP LOCATIONS.

ELECTRICAL ABBREVIATIONS

A

A	AMBER, AMPERE, ALARM
AC	ALTERNATING CURRENT
ACB	AIR CIRCUIT BREAKER
ACR	ACCESS CARD READER
AF	AMPERE FRAME
AFD	ADJUSTABLE FREQUENCY DRIVE
AFRD	ARC-FLASH REDUCTION DEVICE
AM	AMMETER
ANN	ANNUNCIATOR
AR	ALARM RELAY
AS	AMMETER SWITCH, AMPERE SENSOR
AT	AMPERE TRIP
ATS	AUTOMATIC TRANSFER SWITCH
AUX	AUXILIARY
AWG	AMERICAN WIRE GAUGE

B

B	BUS
BC	BATTERY CHARGER
BKR	BREAKER
BR	BRAKE
BT	BEARING TEMPERATURE

C

C	CLOSE, COUNTER, CONTACTOR, CONTROL, CCTV CAMERA
CAP	CAPACITOR
CB	CIRCUIT BREAKER
CB"A"	CIRCUIT BREAKER AUXILIARY CONTACT (OPEN WHEN BREAKER IS OPEN)
CB"B"	CIRCUIT BREAKER AUXILIARY CONTACT (CLOSED WHEN BREAKER IS OPEN)
CD	CONTROL DAMPER
CHH	CONTROL HANDHOLE
CI	CELL INTERLOCK
CKT	CIRCUIT
CL2	CHLORINE
CMH	CONTROL MANHOLE
COS	CABLE OPERATED SWITCH
CP	CONTROL PANEL
CPT	CONTROL POWER TRANSFORMER
CR	CURRENT OF CONTROL RELAY, CARD READER
CS	CONTROL STATION
CT	CYCLE TIMER OR CURRENT TRANSFORMER
CTC	CYCLE TIMER CLUTCH
CTM	CYCLE TIMER MONITOR
2/C	2 CONDUCTOR
4"C	4" CONDUIT

D

DC	DIRECT CURRENT, DOOR CONTACT
DI	DOOR INTERLOCK
DM	DAMPER MOTOR, DEMAND METER, DIMMER SWITCH
DPDT	DOUBLE POLE DOUBLE THROW
DPST	DOUBLE POLE SINGLE THROW
DPR	DIFFERENTIAL PRESSURE REGULATOR
DPS	DIFFERENTIAL PRESSURE SWITCH
DS	DISCONNECT SWITCH, DOOR SWITCH, DESKTOP STATION
DVLS	DISCHARGE VALVE LIMIT SWITCH

E

E	ELECTRIC OPERATOR FOR CONTROL DAMPER OR VALVE
EC	EMPTY CONDUIT
EDS	ELECTRICAL DOOR STRIKE
EG	ENGINE GENERATOR
EGCP	ENGINE GENERATOR CONTROL PANEL
EL	ELEVATION, EMERGENCY LIGHT
EMH	ELECTRICAL MANHOLE
ER	ELECTRODE RELAY
ES	END SWITCH, REQUEST TO EXIT SENSOR
E-STOP	EMERGENCY STOP
ETM	ELAPSED TIME METER
EX	EXISTING
EXP	EXPLOSION PROOF

F

F	FORWARD, FIELD
FO	FIBER OPTIC
FPR	FEEDER PROTECTION RELAY
FS	FLOW SWITCH

G

G	GREEN, GROUND, GENERATOR, GROUND FAULT
GAC	GRANULAR ACTIVE CARBON
GD	GROUND DETECTOR
GEN	GENERATOR
GFI	GROUND FAULT INTERRUPTOR
GLS	GEARED LIMIT SWITCH
GPR	GENERATOR PROTECTION RELAY
GND	GROUND
#8G	#8 GROUND WIRE

H

H	HIGH, HUMIDISTAT
HH	HANDHOLE
HMT	HIGH MOTOR TEMPERATURE
HOA	HAND-OFF-AUTO
HOR	HAND-OFF-REMOTE
HP	HORSEPOWER
HS	HAND STATION
HWCO	HIGH WATER CUTOFF
HZ	HERTZ (CYCLE)

I

I/O	INPUT/OUTPUT
I	INSTANTANEOUS
IJB	INTERCOM JUNCTION BOX

J

J,JB	JUNCTION BOX

K

K	KEY INTERLOCK
KAIC	THOUSAND AMPERES INTERRUPTING CURRENT
KCMIL	THOUSAND CIRCULAR MIL
KO	KEY OPERATED
KV	KILOVOLT
KVA	KILOVOLT AMPERE
KVAR	KILOVAR
KW	KILOWATT
KWH	KILOWATT HOUR

L

L	LOW, LEVEL, LONG-TIME
LA	LIGHTNING ARRESTER
LAN	LOCAL AREA NETWORK
LC	LIGHTING CONTACTOR
LCP	LOCAL CONTROL PANEL
LCS	LOCAL CONTROL STATION
LOA	LOCAL-OFF-AUTO
LOR	LOCAL-OFF-REMOTE
LOS	LOCK OUT STOP
LP	LIGHTING PANEL
LS	LIMIT OR LEVEL SWITCH
LTG	LIGHTING
LVHH	LOW VOLTAGE HANDHOLE
LVMH	LOW VOLTAGE MANHOLE
LWCO	LOW WATER CUTOFF

M

M	MAGNETIC MOTOR STARTER
MA	MILLIAMPERE
MCB	MAIN CIRCUIT BREAKER
MCC	MOTOR CONTROL CENTER
MCLU	MOTOR CONTROL LINEUP
MD	MOISTURE DETECTOR, MOTION DETECTOR
MDL	MAGNETIC DOOR LOCK
MFR	MANUFACTURER
MH	MANHOLE, MOUNTING HEIGHT
MOV	MOTOR OPERATED VALVE
MPR	MOTOR PROTECTION RELAY
MS	MANUAL MOTOR STARTER
MSH	MOTOR SPACE HEATER, MOISTURE SWITCH HIGH
MTS	MANUAL TRANSFER SWITCH
MV	MILLIVOLT, MEDIUM VOLTAGE
MVA	MEGAVOLT AMPERE
MVHH	MEDIUM VOLTAGE HANDHOLE

N

N	NEUTRAL
NGR	NEUTRAL GROUNDING RESISTOR
NGT	NEUTRAL GROUNDING TRANSFORMER
NC	NORMALLY CLOSED
NO	NORMALLY OPEN, NUMBER

O

O	OPEN
OL	OVERLOAD
OOA	ON-OFF-AUTO
OOR	ON-OFF-REMOTE
O/U	OVER/UNDER

P

P	PRIMARY, POWER, POLE
PCS	PLANT CONTROL SYSTEM
PB	PUSH BUTTON, PULL BOX
PF	POWER FACTOR
PFCC	POWER FACTOR CORRECTION CAPACITOR
PH	PHASE
PL	PILOT LIGHT
PLC	PROGRAMMABLE LOGIC CONTROLLER
PP	POWER PANEL
PR	PAIR
PRS	PROXIMITY SWITCH
PS	PRESSURE SWITCH
PT	POTENTIAL TRANSFORMER, PROGRAM TIMER

Q

	NOT USED

R

R	RED, RAISE, RELAY, REVERSE
RECP	RECEPTACLE
RES	RESISTOR
RH	REMOTE HANDSET
RT	REPEATING TIMER
RTD	RESISTANCE TEMPERATURE DETECTOR
RTU	REMOTE TERMINAL UNIT
RVSS	REDUCED VOLTAGE SOLID STATE STARTER
ROSS	RO SYSTEM SUPPLIER

S

S	SHORT-TIME, SHIELDED, STARTER
SA	SURGE ARRESTER, SPEAKER AMPLIFIER
SCADA	SUPERVISORY CONTROL AND DATA ACQUISITION
SF6	SULFUR HEXAFLOURIDE
SH	SPACE HEATER
SN	SOLID NEUTRAL
SO	SOLENOID OILER
SP	SINGLE POLE
SPD	SURGE PROTECTION DEVICE
SPDT	SINGLE POLE DOUBLE THROW
SPST	SINGLE POLE SINGLE THROW
SS	SELECTOR SWITCH, START/STOP
SSM	SOLID-STATE METERING
SSS	SOLID STATE STARTER
SST	SOLID-STATE TRIP
SUPV	SUPERVISORY CONTROL
SV	SOLENOID VALVE
SWB,SWBD	SWITCHBOARD
SWG,SWGR	SWITCHGEAR

T

T	THERMOSTAT, TIMER, TOTALIZER, TRANSFORMER
TACH	TACHOMETER
TB	TERMINAL BLOCK
TC	TIMER CLUTCH
TD	TIME DELAY RELAY
TEMP	TEMPERATURE
TM	TIMER MOTOR
TQ	TORQUE
TR	TIMER RELAY, TRIAD
TSH	TEMPERATURE SWITCH HIGH
TTB	TELEPHONE TERMINAL BOARD

U

UG	UNDERGROUND
UPS	UNINTERRUPTIBLE POWER SUPPLY
UTS	UP TO SPEED

V

V	VOLTS, VOLTAGE RESTRAINED
VA	VOLT AMPERE
VAR	VARMETER
VFD	VARIABLE FREQUENCY DRIVE
VI	VACUUM INTERRUPTER
VLS	VALVE LIMIT SWITCH
VM	VOLTMETER
VPI	VALVE POSITION INDICATOR
VS	VOLTMETER SWITCH

W

W	WHITE, WATTS
WH	WATTHOUR METER
WM	WATT METER
WP	WEATHERPROOF
WPI	WEATHERPROOF IN-USE
WS	WALL STATION

X

X	AUXILIARY RELAY
XFMR	TRANSFORMER
XP	EXPLOSION PROOF

Y

Y	YELLOW

Z

Z	AUXILIARY RELAY, IMPEDANCE
ZS	POSITION SWITCH
ZSS	ZERO SPEED SWITCH

1-1PR#16S	ONE, SINGLE PAIR, TWISTED SHIELDED #16 CABLE
3-7/C#14	THREE, SINGLE, SEVEN CONDUCTOR #14 MULTICONDUCTOR CONTROL CABLES
1-1TR#16S	ONE, TRIAD, TWISTED SHIELDED #16 CABLE

60% SUBMITTAL - NOT FOR CONSTRUCTION

NO.	BY	CHK	APP	DATE	REVISIONS AND RECORD OF USE
B	JSL	MJK	EVB	7/30/2019	60% SUBMITTAL
A	AM	MJK	EVB	3/5/2019	30% SUBMITTAL

BLACK & VEATCH

JOINT VENTURE

BLACK & VEATCH

FILANC

CITY OF MORRO BAY
MORRO BAY WRF
RECLAMATION FACILITY (WRF)

GENERAL
ELECTRICAL
ABBREVIATION AND GENERAL NOTES

DESIGNED: JSL
DETAILED: SBC
CHECKED:
APPROVED:
DATE:

0 1/2 1
IF THIS BAR DOES NOT MEASURE 1" THEN DRAWING IS NOT TO FULL SCALE

PROJECT NO.
400530

00-E-002
SHEET
OF

FD9000A
D400330
PLOTTED: 7/30/2019 1:07 AM FILE: C:\PWBatchPDF\Process\400530 - Morro Bay WRF\400530-00-E-002.dwg

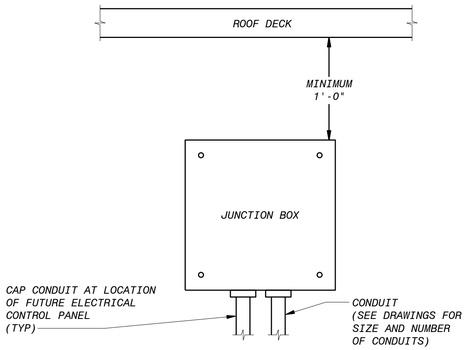

TYPICAL BELOW ROOF DECK TERMINATION MOUNTING DETAIL

NO SCALE

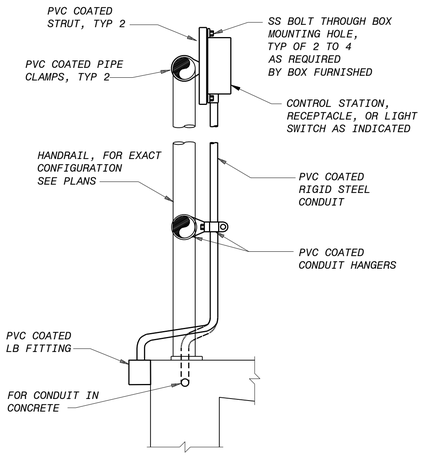

TYPICAL HANDRAIL MOUNTING DETAIL

NO SCALE

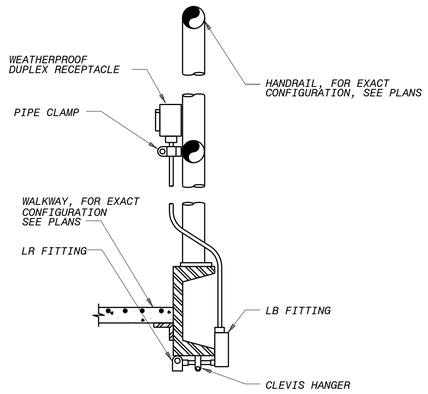

TYPICAL RECEPTACLE MOUNTING AT METAL WALKWAY DETAIL

NO SCALE

NOTES:

1. SEE DRAWINGS 00-E-001 AND 00-E-002 FOR ELECTRICAL LEGEND, ABBREVIATIONS AND NOTES.

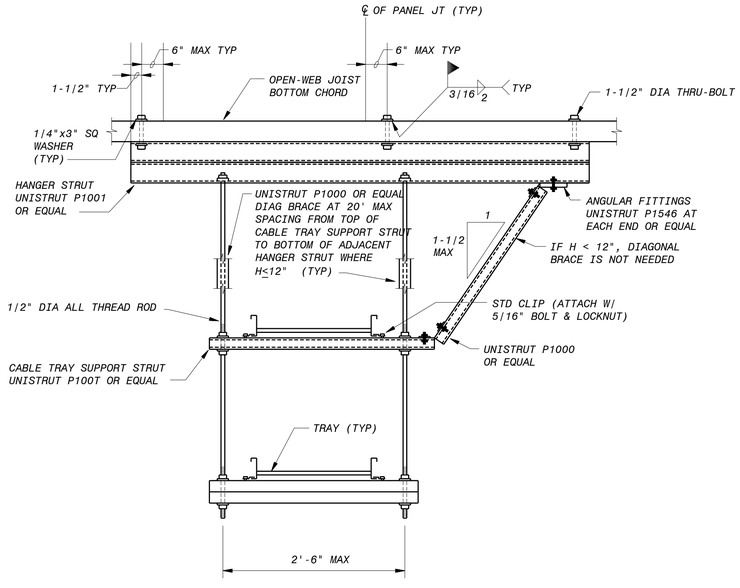

METAL FRAMING CHANNEL TRAY SUPPORT

NO SCALE

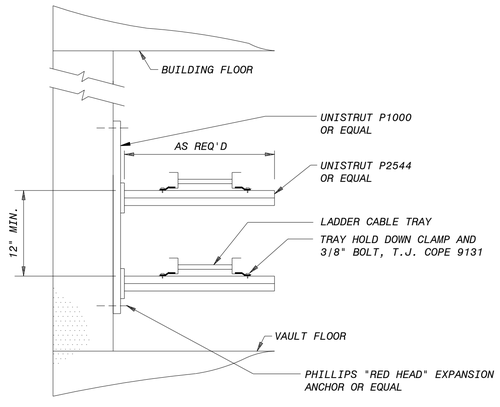

TRAY WALL SUPPORT DETAIL

NO SCALE

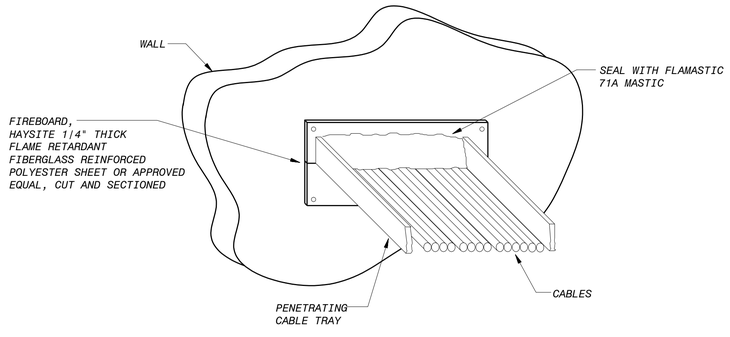

TYPICAL CABLE TRAY PENETRATION FIRE BARRIER

NO SCALE

NO.	BY	CHK	APP	DATE	REVISIONS AND RECORD OF USE
B	JSL	MJK	EVB	7/30/2019	60% SUBMITTAL

BLACK & VEATCH

JOINT VENTURE

BLACK & VEATCH

FILANC

CITY OF MORRO BAY
MORRO BAY WRF
RECLAMATION FACILITY (WRF)

GENERAL
ELECTRICAL
INSATLLATION DETAILS

DESIGNED: JSL
DETAILED: SBC
CHECKED:
APPROVED:
DATE:

0 1/2 1
IF THIS BAR DOES NOT MEASURE 1" THEN DRAWING IS NOT TO FULL SCALE

PROJECT NO.
400530

00-E-501
SHEET
1 OF 3

60% SUBMITTAL - NOT FOR CONSTRUCTION

FB0000A
D400530
PLOTTED: 7/30/2019 1:08 AM FILE: C:\PWBatchPDF\Process\400530 - Morro Bay WRF\400530-00-E-501.dwg

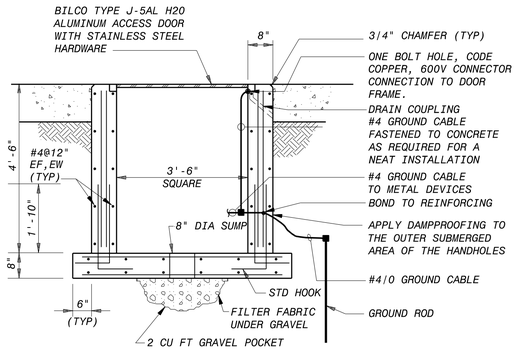

TYPICAL TRAFFIC RATED ELECTRICAL HANDHOLE DETAIL

NO SCALE

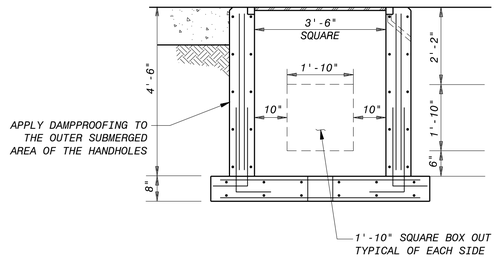

TRAFFIC RATED HANDHOLE DUCTBANK BOX OUT LOCATION DETAIL

NO SCALE

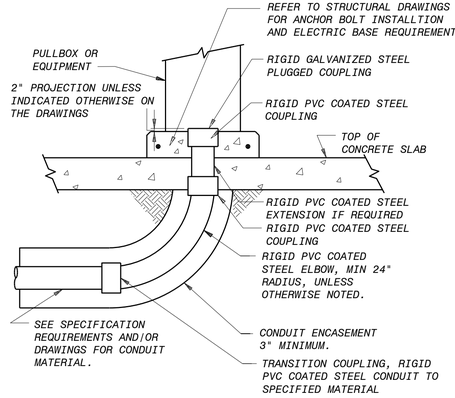

TYPICAL CONDUIT RISER TERMINATING IN CONCRETE SLAB WITH EQUIPMENT BASE

NO SCALE

NOTE:

1. SEE DRAWINGS 00-E-001 AND 00-E-002 FOR ELECTRICAL LEGEND, ABBREVIATIONS AND NOTES.

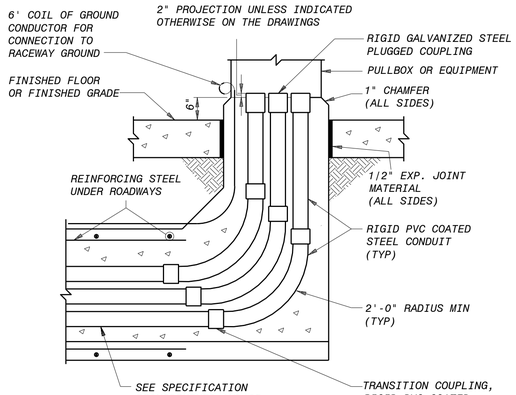

TYPICAL DUCT BANK RISER CONSTRUCTION

NO SCALE

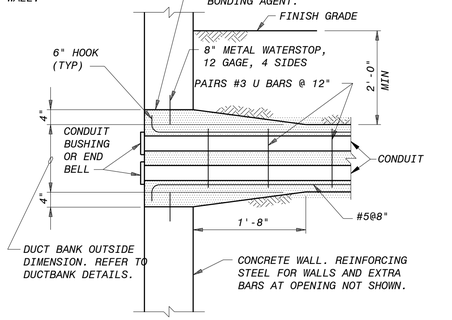

TYPICAL UNDERGROUND DUCT BANK ENTRANCE DETAIL

NO SCALE

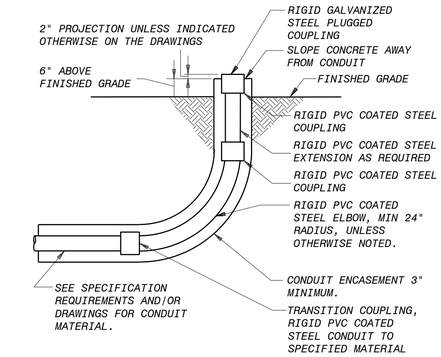

TYPICAL CONDUIT RISER TERMINATING IN SOIL

NO SCALE

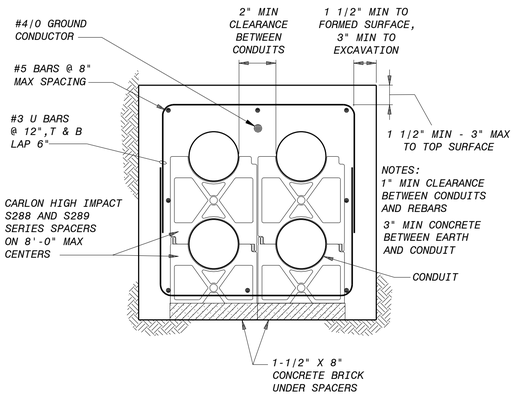

TYPICAL REINFORCED DUCT BANK SECTION

NO SCALE

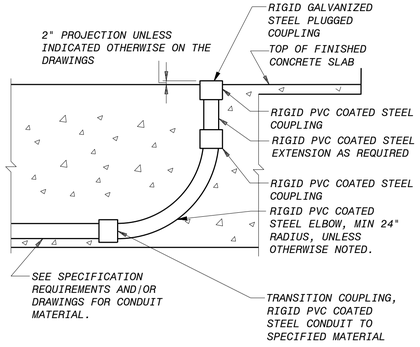

TYPICAL EMBEDDED CONDUIT RISER TERMINATING IN FOUNDATION

NO SCALE

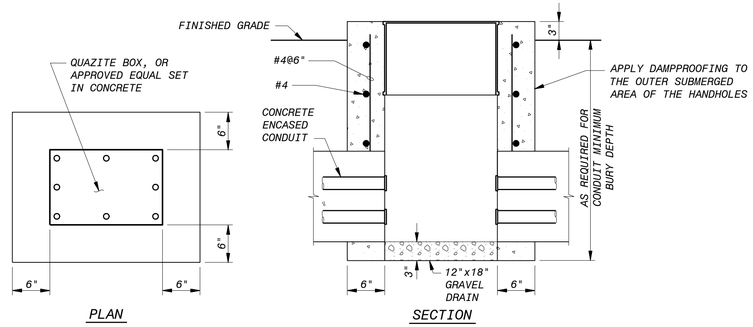

TYPICAL UNDERGROUND (UG) PULL BOX DETAIL

NO SCALE

NO.	BY	CHK	APP	REVISIONS AND RECORD OF USE	DATE
B	JSL	MJK	EVB	60% SUBMITTAL	7/30/2019

BLACK & VEATCH JOINT VENTURE — BLACK & VEATCH — FILANC

CITY OF MORRO BAY
MORRO BAY WRF
RECLAMATION FACILITY (WRF)

GENERAL
ELECTRICAL
INSATLLATION DETAILS

DESIGNED: JSL
DETAILED: SBC
CHECKED:
APPROVED:
DATE:

0 1/2 1
IF THIS BAR DOES NOT MEASURE 1" THEN DRAWING IS NOT TO FULL SCALE

PROJECT NO.
400530

00-E-502
SHEET
2 OF 3

60% SUBMITTAL - NOT FOR CONSTRUCTION

FD9000A
D400530
PLOTTED: 7/30/2019 1:08 AM FILE: C:\PWBatchPDF\Process\400530 - Morro Bay WRF\400530-00-E-502.dwg

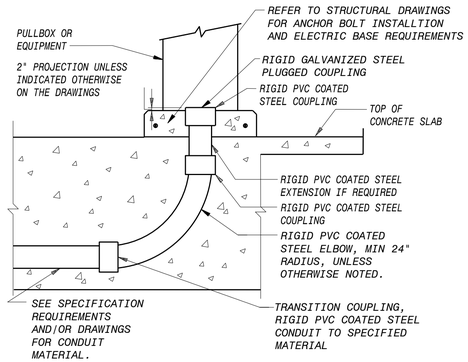

TYPICAL EMBEDDED CONDUIT RISER TERMINATING IN FOUNDATION WITH EQUIPMENT BASE

NO SCALE

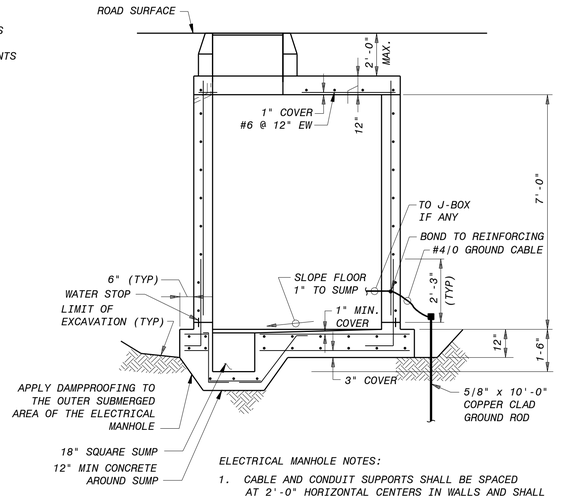

ELECTRICAL MANHOLE NOTES:

1. CABLE AND CONDUIT SUPPORTS SHALL BE SPACED AT 2'-0" HORIZONTAL CENTERS IN WALLS AND SHALL BEGIN 2'-0" FROM FLOOR.
2. SUPPORTS IN CEILINGS SHALL RUN FROM WALL TO WALL.
3. OPENING SHALL BE PROVIDED IN MANHOLE WALLS FOR CONDUIT BANK ENTRANCE AS REQUIRED.
4. ALL REINFORCING ON THIS DETAIL SHALL BE #6@12" UNLESS NOTED OTHERWISE. CENTER VERTICAL REINFORCING IN THE WALLS.
5. CONCRETE TO BE ROUGH AND CLEAN AT CONSTRUCTION JOINT FACES.

TRAFFIC RATED ELECTRICAL MANHOLE SECTION (2)

NO SCALE SUITABLE FOR ROADWAY LOCATIONS

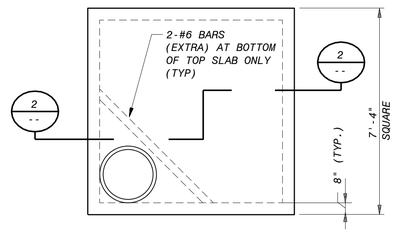

TYPICAL TRAFFIC RATED ELECTRICAL MANHOLE

NO SCALE SUITABLE FOR ROADWAY LOCATIONS

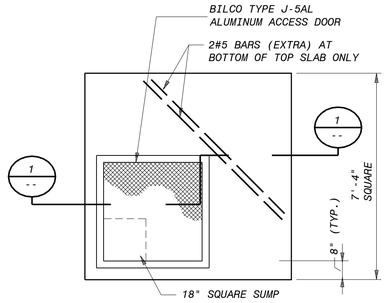

TYPICAL ELECTRICAL MANHOLE (SINGLE CHAMBER)

NO SCALE NOT SUITABLE FOR ROADWAY LOCATIONS

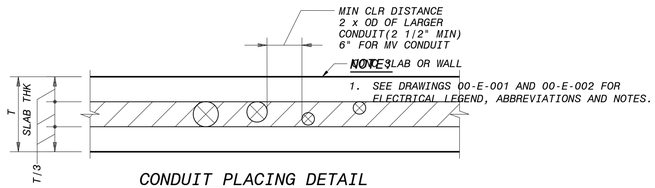

NOTE:

1. SEE DRAWINGS 00-E-001 AND 00-E-002 FOR ELECTRICAL LEGEND, ABBREVIATIONS AND NOTES.

CONDUIT PLACING DETAIL

NO SCALE

NOTES:

1. PLACE CONDUIT ONLY IN SHADED AREA
2. FOR CONDUIT REQUIREMENTS SEE THE ELECTRICAL DRAWINGS AND SPECIFICATIONS.

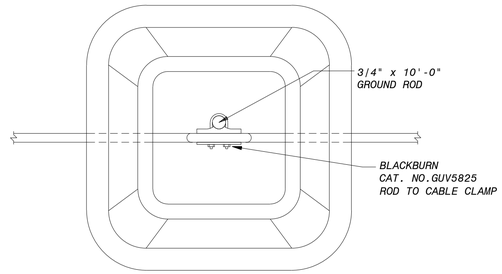

PLAN

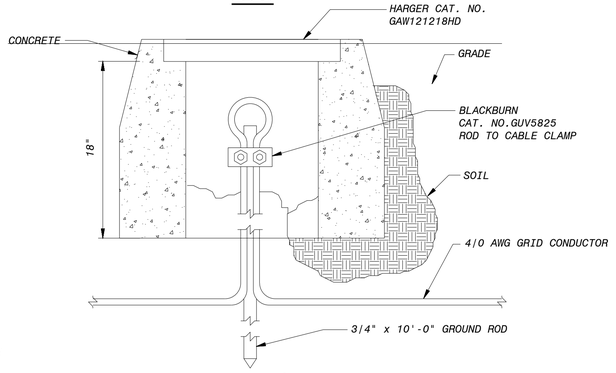

ELEVATION

TYPICAL GROUND TEST STATION

NO SCALE

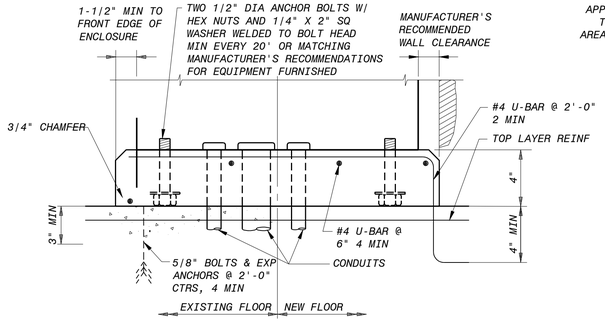

ELECTRICAL EQUIPMENT BASE

NO SCALE

NOTE:UNLESS OTHERWISE NOTED, ALL INDOOR FLOOR-MOUNTED ELECTRICAL EQUIPMENT, INCLUDING SWITCHGEAR, SWITCHBOARDS, MOTOR CONTROL CENTERS, ADJUSTABLE FREQUENCY DRIVES, INSTRUMENT CABINETS, ETC., SHALL BE PROVIDED WITH EQUIPMENT BASES.

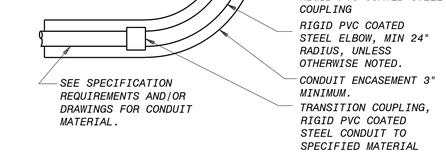

TYPICAL CONDUIT RISER TERMINATING IN CONCRETE SLAB

NO SCALE

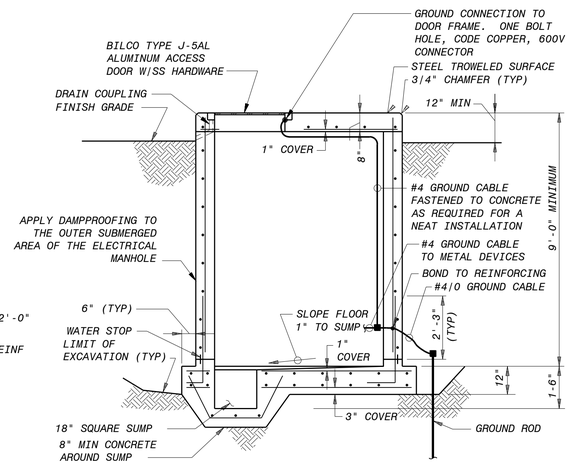

ELECTRICAL MANHOLE NOTES:

1. CABLE AND CONDUIT SUPPORTS SHALL BE SPACED AT 2'-0" HORIZONTAL CENTERS IN WALLS AND SHALL BEGIN 2'-0" FROM FLOOR.
2. SUPPORTS IN CEILINGS SHALL RUN FROM WALL TO WALL.
3. OPENING SHALL BE PROVIDED IN MANHOLE WALLS FOR CONDUIT BANK ENTRANCE AS REQUIRED.
4. ALL REINFORCING ON THIS DETAIL SHALL BE #5@12" ON CENTER UNLESS NOTED OTHERWISE. CENTER VERTICAL REINFORCING IN THE WALLS.
5. CONCRETE TO BE ROUGH AND CLEAN AT CONSTRUCTION JOINT FACES.

ELECTRICAL MANHOLE SECTION (1)

NO SCALE NOT SUITABLE FOR ROADWAY LOCATIONS

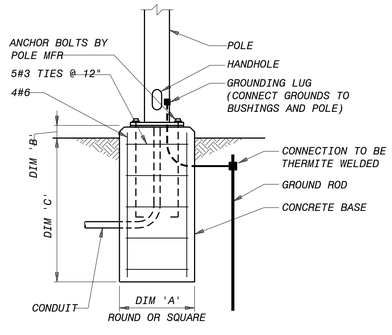

TYPICAL POLE MOUNTING DETAIL

NO SCALE

A	B	C	POLE LENGTH
1'-0"	2"	SEE NOTE	10' TO 12'
1'-6"	2"		12' TO 20'

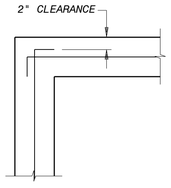

CORNER REINFORCING PLAN

NO SCALE

NOTE:10% OF LENGTH PLUS 3'

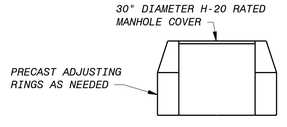

MANHOLE COVER

NO SCALE

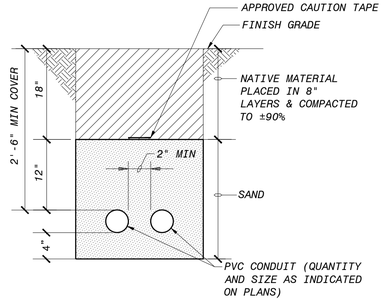

TYPICAL DIRECT BURIED CONDUIT SECTION

NO SCALE

60% SUBMITTAL - NOT FOR CONSTRUCTION

NO.	BY	CHK	APP	DATE	REVISIONS AND RECORD OF USE
B	JSL	MJK	EVB	7/30/2019	60% SUBMITTAL

BLACK & VEATCH

JOINT VENTURE

BLACK & VEATCH

FILANC

CITY OF MORRO BAY
MORRO BAY WRF
RECLAMATION FACILITY (WRF)

GENERAL
ELECTRICAL
INSATLLATION DETAILS

DESIGNED: JSL
DETAILED: SBC
CHECKED:
APPROVED:
DATE:

0 1/2 1

IF THIS BAR DOES NOT MEASURE 1" THEN DRAWING IS NOT TO FULL SCALE

PROJECT NO.
400530

00-E-503
SHEET
3 OF 3

FD9000A
D400530
PLOTTED: 7/30/2019 1:08 AM FILE: C:\PWBatchPDF\Process\400530 - Morro Bay WRF\400530-00-E-503.dwg

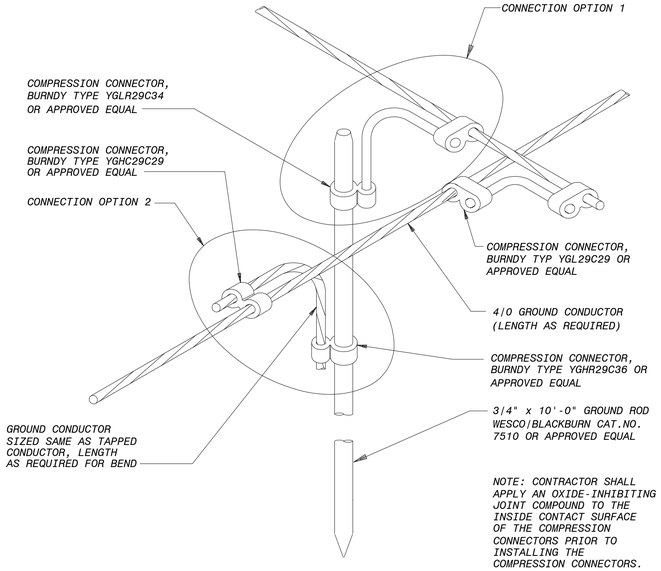

TYPICAL COMPRESSION FITTING GROUND ROD TO CONNECTION AT CROSS OR TEE

(TWO CONNECTION OPTIONS SHOWN)
NO SCALE

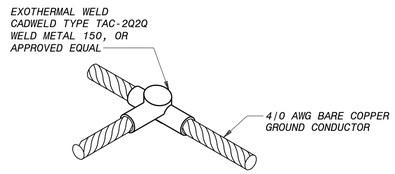

TYPICAL EXOTHERMAL WELD TEE CONNECTION

NO SCALE

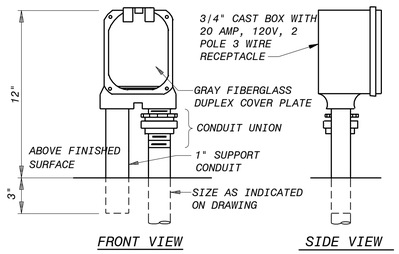

NOTE: ALL EXPOSED CONDUIT SHALL BE PVC COATED RIGID STEEL.

TYPICAL WEATHERPROOF RECEPTACLE MOUNTING DETAIL

NO SCALE

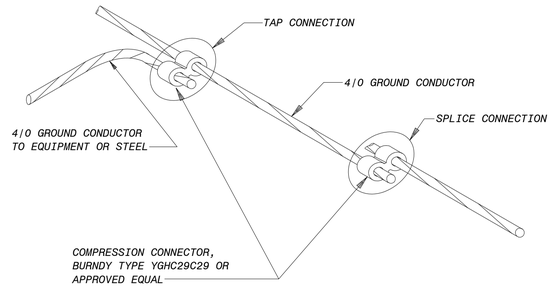

NOTE: CONTRACTOR SHALL APPLY AN OXIDE-INHIBITING JOINT COMPOUND TO THE INSIDE CONTACT SURFACE OF THE COMPRESSION CONNECTOR PRIOR TO INSTALLING THE COMPRESSION CONNECTOR.

TYPICAL COMPRESSION FITTING TEE CONNECTION

NO SCALE

NOTE:

1. SEE DRAWINGS 00-E-001 AND 00-E-002 FOR ELECTRICAL LEGEND, ABBREVIATIONS AND NOTES.

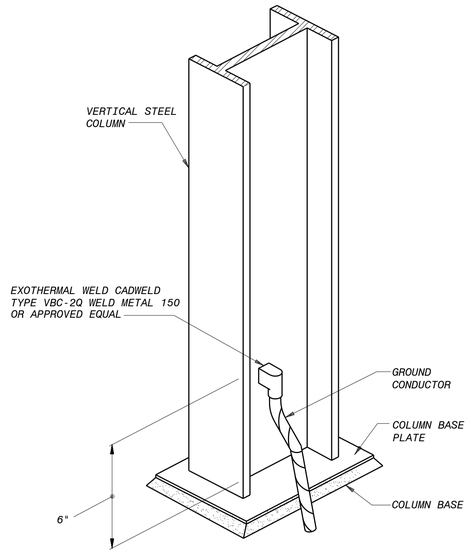

TYPICAL EXOTHERMAL WELD STRUCTURE COLUMN GROUNDING

NO SCALE

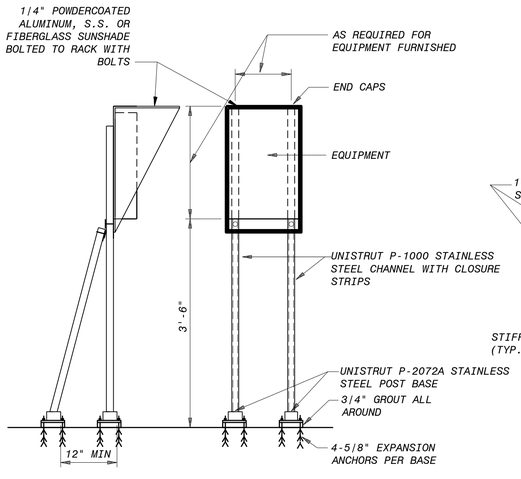

TYPICAL EQUIPMENT MOUNTING DETAIL

NO SCALE

NOTE: IN OUTDOOR OR WET LOCATIONS, USE STAINLESS STEEL BOLTS, NUTS, WASHERS, ANCHOR BOLTS, AND SUNSHADE.

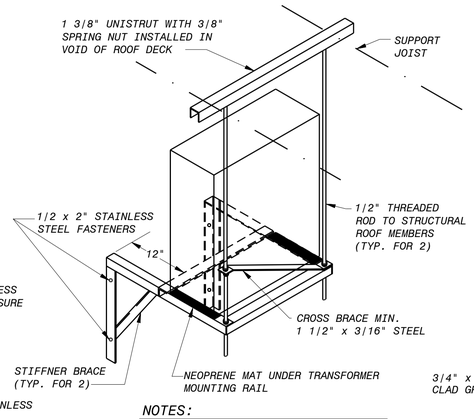

NOTES:

1. FRAME TO BE MINIMUM 2"x 2"x 1/4"
2. FULL WELD AT ALL JOINTS.
3. EPOXY ENAMEL PAINT ASSEMBLY PRIOR TO INSTALLATION

TYPICAL WALL MOUNTED TRANSFORMER SUPPORT FOR UP TO 50KVA UNITS

NO SCALE

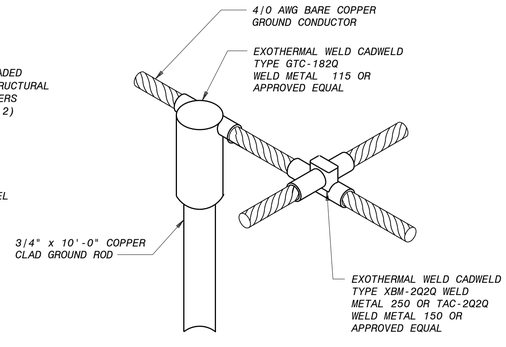

TYPICAL EXOTHERMAL WELD GROUND ROD AT CROSS OR TEE CONNECTION

NO SCALE

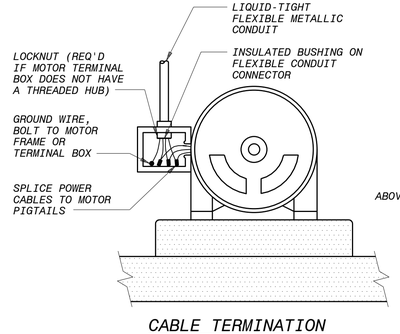

CABLE TERMINATION AT MOTOR

NO SCALE

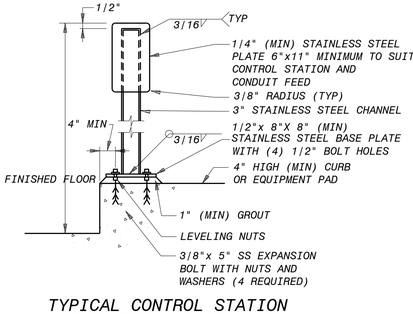

TYPICAL CONTROL STATION MOUNTING DETAIL

NO SCALE

NOTE: IN OUTDOOR OR WET LOCATIONS, USE STAINLESS STEEL BOLTS, NUTS, WASHERS, ANCHOR BOLTS, AND SUNSHADE.

NO.	BY	CHK	APP	DATE	REVISIONS AND RECORD OF USE
B	JSL	MJK	EVB	7/30/2019	60% SUBMITTAL

BLACK & VEATCH
JOINT VENTURE
BLACK & VEATCH
FILANC

CITY OF MORRO BAY
MORRO BAY WRF
RECLAMATION FACILITY (WRF)

GENERAL
ELECTRICAL
GROUNDING DETAILS

DESIGNED: JSL
DETAILED: SBC
CHECKED:
APPROVED:
DATE:

0 1/2 1
IF THIS BAR DOES NOT MEASURE 1" THEN DRAWING IS NOT TO FULL SCALE

PROJECT NO.
400530

00-E-504
SHEET
OF

60% SUBMITTAL - NOT FOR CONSTRUCTION

FB0000A
D400530
PLOTTED: 7/30/2019 1:09 AM FILE: C:\PWBatchPDF\Process\400530 - Morro Bay WRF\400530-00-E-504.dwg

NOTES:

1. INCOMING PG&E POWER FEED TO BE DIRECT-BURIED, SCHEDULE 80 PVC.
2. THE SITE DUCT BANK WILL BE DIRECT-BURIED EXCEPT LOCATIONS WITH TRAFFIC WHICH WILL BE CONCRETE REINFORCED.
3. DUCT BANK LOCATED WITHIN ROADWAYS TO BE REINFORCED FOR TRAFFIC LOADING.
4. REMOVABLE AND FIXED BOLLARD PROTECTION ON OPEN SIDES OF PAD SHALL BE PROVIDED. A WORKING CLEARANCE SPACE OF 96" IN FRONT AND 36" CLEAR SPACE ON SIDES AND BACK OF THE TRANSFORMER SHALL BE PROVIDED.
5. SIGNAL AND COMMUNICATION DUCT BANK MANHOLE AND PULL BOXES SHALL BE SEPARATED FROM THE POWER RACEWAYS AS PER NEC REQUIREMENT.
6. FOR DIRECT BURIED DUCTS THE DEPTH OF LAYING FROM TOP OF SURFACE SHALL BE A MINIMUM OF 18".
7. FOR REINFORCED DUCT BANKS, THE DEPTH OF LAYING FROM TOP OF THE SURFACE SHALL BE 24".
8. REFER TO DRAWING NO. 10-E-601 AND 10-E-602 FOR DUCTBANK SCHEDULE.
9. THE DUCTBANK ROUTING IS INDICATIVE, ELECTRICAL SUBCONTRACTOR TO FINALIZE THE ROUTING POST AWARD OF CONTRACT.

P/L
PG&E HIGH VOLTAGE EASEMENT
STATE WATER PROJECT PIPELINE EASEMENT
MORRO BAY CITY LIMITS
INCOMING PG&E POWER FEED TO UTILITY TRANSFORMER
UTILITY UNDERGROUND SPLICE / PULL BOX TYPICAL (EVERY 500 APART)
PROPERTY LINE
TCE
SOUTH STORMWATER DETENSION BASIN
HILLSIDE DRAINAGE CHANNEL AND CATCH BASIN
MANUALLY OPERATED AFTER-HOURS SECURITY GATE
P/E
SECTION 16 (4X1 DUCTS) (26"W X 11"D)
SECTION 17 (4X1 DUCTS) (26"W X 11"D)
SECTION 14 (1X1 DUCTS) (10"W X 26"D)
SECTION 15 (4X1 DUCTS) (26"W X 11"D)
SECTION 13 (1X1 DUCTS + 4X2 DUCTS) ((10"W X 26"D) + 12" SPACE +(24"W X 24"D)
PERIMETER FENCE
HH-05
MH-06
ELECTRICAL ROOM
OUTDOOR STORAGE AISLES (TYP OF 4 TOTAL, 3 COVERED)
SECTION 11 (5X3 DUCTS) (31"W X 21"D)
SECTION 10 (1X1 DUCTS + 4X2 DUCTS) ((10"W X 26"D) + 12" SPACE +(24"W X 24"D)
HH-04
CALCITE CONTACTORS AREA
OPERATIONS BUILDING
STORAGE
PARKING CANOPY
VEHICLE EQUIPMENT STORAGE
PRODUCT WATER STORAGE TANK
OUTFALL PUMP STATION
RO/UV BUILDING
MAINTENANCE BUILDING
SECTION 12 (3X3 DUCTS) (21"W X 21"D)
DECHLORINATION STATION
LIFT STATION
MOTOR OPERATED SECURED PLANT AREA ACCESS GATE
STORMWATER OUTLET WITH ENERGY DISSIPATION/ DISTRIBUTION MEASURES (TYP)
VACTOR RECEIVING STATION/WASHDOWN
SECTION 1 (3X2 DUCTS) (19"W X 24"D)
EMERGENCY GENERATOR
ELECTRICAL ROOM
MH-01
SECTION 2B (5X3 DUCTS) (29"W X 29"D)
SECTION 2A (5x3 DUCTS) (39"W X 35"D)
INCOMING UTILITY TRANSFORMER PAD (90"X106"X6") (NOTE 4)
SECTION 3 (1X1 DUCTS + 5x3 DUCTS) ((10"WX26"D) + 12" SPACE + (29"W X 29"D)
SECTION 4 (1X1 DUCTS + 4x3 DUCTS) ((10"W X 26"D) + 12" SPACE + (24"W X 29"D)
SECTION 5 (1X1 DUCTS + 5X2 DUCTS) ((10"W X 26"D) + 12" SPACE + (29"W X 24"D)
SECTION 6 (1X1 DUCTS + 3X2 DUCTS) ((10"W X 26"D) + 12" SPACE + (19"W X 24"D)
NORTH STORMWATER DETENTION BASIN
SECTION 18 (4X1 DUCTS) (26"W X 11"D)
HILLSIDE DRAINAGE CHANNEL AND CATCH BASIN
MH-04
MH-05
ELECTRICAL ROOM
MH-03
S.A.F.E. SETTLE TANK
DEWATERING AREA
HH-02
SLUDGE HOLDING TANKS
HH-
HEADWORKS
HH-03
S.A.F.E. FILTER
MBR SYSTEM
RWA BASINS
RO FEED TANKS
SECTION 7 (4X4 DUCTS) (26"W X 26"D)
SECTION 8 (4X1 DUCTS) (26"W X 11"D)
PERIMETER FENCE
ELECTRICAL AND MECHANICAL ROOM
STORMWATER CONTROL AND PUMPING STRUCTURE
SECTION 9 (1X1 DUCTS + 4X2 DUCTS) ((10"W X 26"D) + 12" SPACE +(24"W X 29"D)

60' 30' 0 60' 120'
1"=60'

60% SUBMITTAL - NOT FOR CONSTRUCTION

NO.	BY	CHK	APP	DATE	REVISIONS AND RECORD OF USE
B	JSL	MJK	EVB	7/30/2019	60% SUBMITTAL
A	AM	MJK	EVB	3/5/2019	30% SUBMITTAL

BLACK & VEATCH
JOINT VENTURE
FILANC
BLACK&VEATCH

CITY OF MORRO BAY
MORRO BAY WRF
RECLAMATION FACILITY (WRF)

SITE - OVERALL ELECTRICAL POWER PLAN

DESIGNED: JSL
DETAILED: SBC
CHECKED:
APPROVED:
DATE:

0 1/2 1
IF THIS BAR DOES NOT MEASURE 1" THEN DRAWING IS NOT TO FULL SCALE

PROJECT NO. 400530

10-E-100
SHEET
OF

FD9000A
D400530
PLOTTED: 7/30/2019 4:10 PM FILE: C:\pw_working\bvw_americas\d0683825\400530-10-E-100.dwg

NO.	LOCATION	FOOT CANDLE	FIXTURE TYPE
INTERIOR LOCATION			
A1	RO/UV BUILDING	30	F1, F1E, F3, F3E, EXIT
A2	WATER VEHICLES EQUIPMENT STORAGE	15	F1, F1E, F3, F3E, EXIT
A3	ELECTRICAL BUILDING	35	F1, F1E, F3, F3E, EXIT
A4	EMERGENCY POWER FACILITY	35	F1, F1E, F3, F3E, EXIT
A5	CHEMICAL FACILITY	30	F2, F2E, F3, F3E, EXIT
A6	OPERATIONS & CONTROL BUILDING	30	NOTE 2
A7	MAINTENANCE BUILDING	50	NOTE 3
	GENERAL INTERIOR LOCATION		
	OFFICE	70	
	WORKSHOP AREA	75	
	TOILETS/LOCKER ROOM/ LOBBY/CORRIDORS	15	
	LABORATORIES	75	
	LUNCH ROOM	35	

NO.	LOCATION	FOOT CANDLE	FIXTURE TYPE
EXTERIOR LOCATION			
B1	WASH RACK	5	F3, F3E
B2	WRF PARKING CANOPY	1	F1, F1E
B3	COLLECTION VEHICLES EQUIPMENT STORAGE	1	F1, F1E
B4	PLANT DRAIN/SEWER PUMP STATION	30	F1, F1E
B5	HEADWORKS AREA	5	P1, P2, P3
	HEADWORKS AREA - FINE SCREENS	5	
	HEADWORKS AREA - ODOR CONTROL SCREENS	5	
	HEADWORKS AREA - VACTOR WASHDOWN AREA	5	
B6	TREATMENT AREA - BNR BASINS	5	P1, P2, P3
	TREATMENT AREA - MBR SYSTEM	5	
	TREATMENT AREA - RO FEED TANKS	5	
	TREATMENT AREA - RECYCLED WATER PUMPS	5	
B7	EFFLUENT AREA - CALCITE CONTACTOR AREA	5	P1, P2, P3
	EFFLUENT AREA - IPR PRODUCT WATER STORAGE TANK	5	
	EFFLUENT AREA - PRODUCT WATER IPR PUMPS	5	
	EFFLUENT AREA - OUTFALL TANK AND PUMPS	5	
B8	EFFLUENT AREA - DISINFECTION SYSTEM	5	P1, P2, P3
	RESIDUALS AREA - SLUDGE HOLDING TANKS & SAFE SETT	5	
	RESIDUALS AREA - DEWATERING FACILITY	5	
	RESIDUALS AREA - SAFE FILTER	5	
	GENERAL EXTERIOR LOCATION		
	GENERAL SITE AREA	1	
	WALKWAY	5	
	SECURITY FENCE	0.5	
	VEHICLE GATE	5	
	ROADWAY	0.5	
	MAIN BUILDING ENTRANCES	5	
	SIDE BUILDING ENTRANCES	1	
	PROCESS AREA	5	
	PARKING AREA	1	

LIGHTING FIXTURE SCHEDULE

FIXTURE	LAMP	DESCRIPTION	TYPE OF MOUNTING
F1	LED 53 WATT 5955 LUMENS 4000K	53 WATTS SUSPENDED MOUNTED LED FIXTURE	PENDANT MOUNT
F1E	LED 53 WATT 5955 LUMENS 4000K	53 WATTS SUSPENDED MOUNTED LED FIXTURE WITH EMERGENCY BATTERY	PENDANT MOUNT
F2	LED 53 WATT 5955 LUMENS 4000K	53 WATTS SUSPENDED MOUNTED VAPOR TIGHT LED FIXTURE	SUSPENDED;PENDANT MOUNT VAPOR TIGHT
F2E	LED 53 WATT 5955 LUMENS 4000K	53 WATTS SUSPENDED MOUNTED VAPOR TIGHT LED FIXTURE WITH EMERGENCY BATTERY	SUSPENDED;PENDANT MOUNT VAPOR TIGHT
F3	LED 25 WATT 3201 LUMENS 4000K	25 WATT LED FIXTURE 3201 LUMENS 4000K WALL MOUNTED	WALL MOUNTED, 10' ABOVE GRADE
F3E	LED 25 WATT 3201 LUMENS 4000K	25 WATT LED FIXTURE 3201 LUMENS 4000K WALL MOUNTED WITH EMERGENCY BATTERY	WALL MOUNTED, 10' ABOVE GRADE
P1	LED 52 WATT 5862 LUMENS 4000K	52 WATTS, POLE MOUNTED LED FIXTURE, OUTDOOR USE, PHOTO CELL CONTROLLED	10' POLE MOUNTED , PHOTO CELL CONTROLLED
P2	LED 52 WATT 5862 LUMENS 4000K	52 WATTS, STANCHION MOUNTED LED FIXTURE, OUTDOOR USE, PHOTO CELL CONTROLLED	STANCHION MOUNTED 10' ABOVE PLATFORM PHOTO CELL CONTROLLED
P3	LED 140 WATT 19677 LUMENS 4000K	140 WATT LED FLOOD LIGHT, POLE MOUNTED, OUTDOOR USE, PHOTO CELL CONTROL	FLOODLIGHT POLE MOUNTED 10', PHOTO CELL CONTROL
EXIT	LED LAMPS FURNISHED WITH UNIT	INDUSTRIAL EMERGENCY EXIT SIGN, NI-CAD BATTERY	EXIT DOORS, WALL MOUNTED 1' ABOVE DOOR

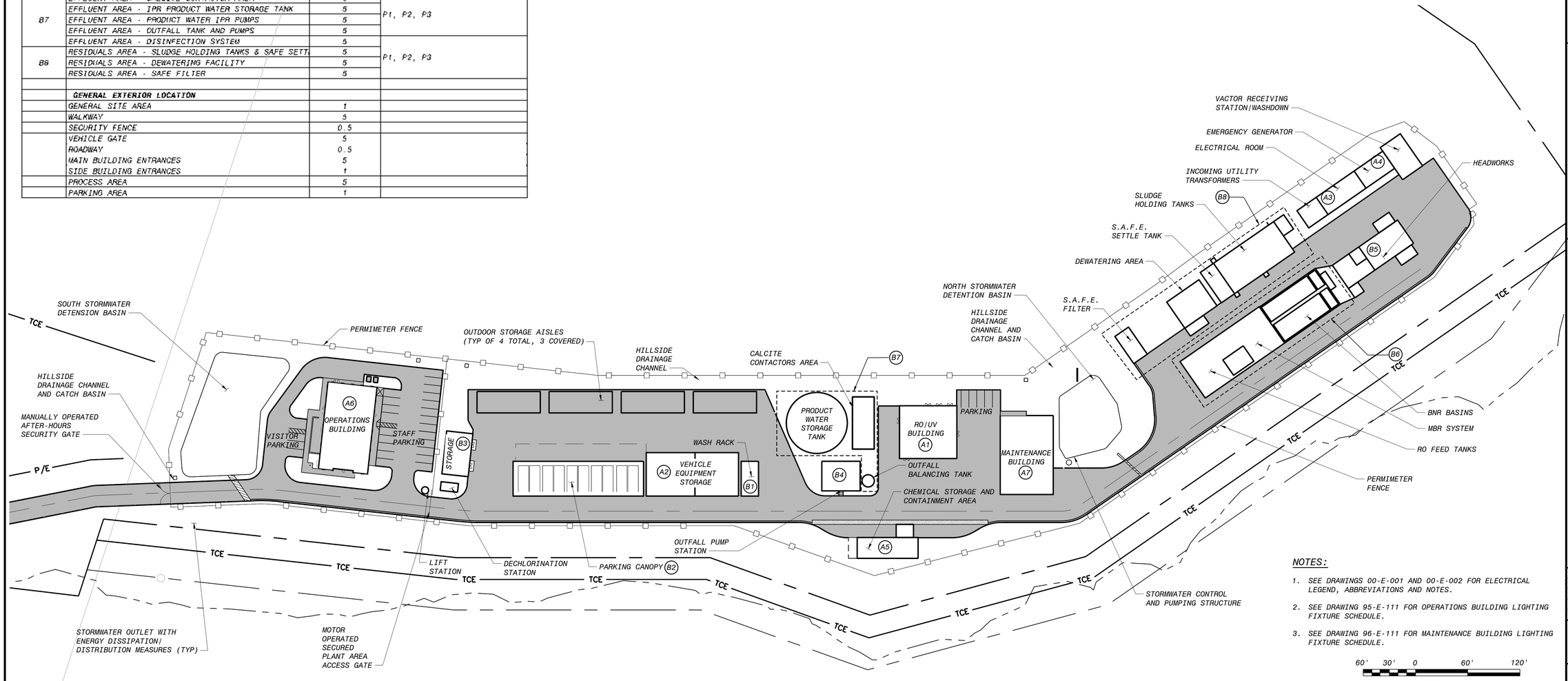

NOTES:

1. SEE DRAWINGS 00-E-001 AND 00-E-002 FOR ELECTRICAL LEGEND, ABBREVIATIONS AND NOTES.
2. SEE DRAWING 95-E-111 FOR OPERATIONS BUILDING LIGHTING FIXTURE SCHEDULE.
3. SEE DRAWING 96-E-111 FOR MAINTENANCE BUILDING LIGHTING FIXTURE SCHEDULE.

60' 30' 0 60' 120'
1"=60'

60% SUBMITTAL - NOT FOR CONSTRUCTION

NO.	BY	CHK	APP	DATE	REVISIONS AND RECORD OF USE
B	JSL	MJK	EVB	7/30/2019	60% SUBMITTAL

BLACK & VEATCH
JOINT VENTURE
BLACK&VEATCH
FILANC

CITY OF MORRO BAY
MORRO BAY WRF
RECLAMATION FACILITY (WRF)

SITE - OVERALL
ELECTRICAL
LIGHTING PLAN

DESIGNED: JSL
DETAILED: SBC
CHECKED:
APPROVED:
DATE:

0 1/2 1
IF THIS BAR DOES NOT MEASURE 1" THEN DRAWING IS NOT TO FULL SCALE

PROJECT NO.
400530

10-E-111
SHEET
OF

FB0000A
D400530
PLOTTED: 7/29/2019 11:05 PM FILE: C:\PWBatchPDF\Process\400530 - Morro Bay WRF\400530-10-E-111.dwg

FROM	TO	CABLE SIZE	No of Conduits	Size of conduits as per load list	No of Conduits - Power	Size of conduits listed as per standard size	No of Conduits - Control	Size of Control Conduits	No of Conduits - Signal	Size of Signal Conduits	Used Conduits (Power+ Control+Signal)	Spare Conduits	Total Conduits	Section Number	Bottom Depth	Conduit Size	Layers of Conduit	Gap between the conduits	Top Cover Depth	Total Depth (inch)	Side width	Conduit Size	Layers of Conduit	Gap between the conduits	Total Width	Concrete Encased	Top Burial Depth
GEN	ATS	9-350KCMIL,3#1/0N,(3)2-1/2"	3	2.5	3	3	2	3	2	3	5	1	6	Section 1	4	3	2	2	12	24	3	3	3	2	19	No	18
TRAFO	ATS	24-500KCMIL,8#4/0N,(8)3"	14	5	14	5	0	3	0	3	14	1	15	Section 2A	4	5	3	2	12	35	3	5	5	2	39	No	18
SWB	50-MCC	15-500KCMIL,5#4/0G,(5)3"	5	3	5	3					7																
80-ELEC-MCC-0001	Solids - Rotary lobe sludge holding tank Blower #1	3#6,#10G,1"	1	1																							
80-ELEC-MCC-0001	Solids - Rotary lobe sludge holding tank Blower #2	3#6,#10G,1"	1	1	1	3					1																
80-ELEC-MCC-0001	Solids - Sludge Holding Tank Mixer #1	3#12,#12G,3/4"	1	1																							
80-ELEC-MCC-0001	Solids - Sludge Holding Tank Mixer #2	3#12,#12G,3/4"	1	1																							
80-ELEC-MCC-0001	Solids - Dewatering Sludge Feed Pumps	3#12,#12G,3/4"	1	1																							
80-ELEC-MCC-0001	Solids - Belt Filter Press Dewatering Sludge Belt Press, Solids dewatering angled conveyor, Belt Press Transfer Conveyor, Solids dewatering horizontal conveyor	3#8,#10G,3/4"	1	1	1	3					1																
80-ELEC-MCC-0001	Lighting Transformer (80-ELEC-LT-0001) for Headworks Area (LP (80-ELEC-LP-0001) and 120V Power Panel (80-ELEC-PP-0001)	3#1/0,#8G,1-1/2"	1	1			1	3	1	3		4	15	Section 2B	4	3	3	2	12	29	3	3	5	2	29	No	18
80-ELEC-MCC-0001	Power Panel for Headworks Area (kVA rating assumed) (80-ELEC-PP-0002)	3#1/0,#8G,1-1/2"	1	1	1	3					1																
80-ELEC-MCC-0001	HVAC (kW rating assumed)	3#2,#8G,1-1/4"	1	1																							
80-ELEC-MCC-0001	Influent - Disc Filter SAFE Filter, SAFE Filter Backwash Pump, SAFE Filter Solid Waste Pump	3#2,#8G,1-1/4"	1	1	1	3					1																
80-ELEC-MCC-0002	RO Feed Tanks - Recycled Water Pump #1	3#12,#12G,3/4"	1	1																							
80-ELEC-MCC-0002	RO Feed Tanks - Recycled Water Pump #2	3#12,#12G,3/4"	1	1																							
MV Cables	Trafo				1	4					1		1		4	4	1	3	18	26	3	4	1	2	10	No	18
SWB	50-MCC	15-500KCMIL,5#4/0G,(5)3"	5	3	5	3					7																
80-ELEC-MCC-0001	Solids - Rotary lobe sludge holding tank Blower #1	3#6,#10G,1"	1	1																							
80-ELEC-MCC-0001	Solids - Rotary lobe sludge holding tank Blower #2	3#6,#10G,1"	1	1	1	3					1																
80-ELEC-MCC-0001	Solids - Sludge Holding Tank Mixer #1	3#12,#12G,3/4"	1	1																							
80-ELEC-MCC-0001	Solids - Sludge Holding Tank Mixer #2	3#12,#12G,3/4"	1	1																							
80-ELEC-MCC-0001	Solids - Dewatering Sludge Feed Pumps	3#12,#12G,3/4"	1	1																							
80-ELEC-MCC-0001	Solids - Belt Filter Press Dewatering Sludge Belt Press, Solids dewatering angled conveyor, Belt Press Transfer Conveyor, Solids dewatering horizontal conveyor	3#8,#10G,3/4"	1	1	1	3					1																
80-ELEC-MCC-0001	Lighting Transformer (80-ELEC-LT-0001) for Headworks Area (LP (80-ELEC-LP-0001) and 120V Power Panel (80-ELEC-PP-0001)	3#1/0,#8G,1-1/2"	1	1			1	3	1	3		4	15	Section 3	4	3	3	2	12	29	3	3	5	2	29	No	18
80-ELEC-MCC-0001	Power Panel for Headworks Area (kVA rating assumed) (80-ELEC-PP-0002)	3#1/0,#8G,1-1/2"	1	1	1	3					1																
80-ELEC-MCC-0001	HVAC (kW rating assumed)	3#2,#8G,1-1/4"	1	1																							
80-ELEC-MCC-0001	Influent - Disc Filter SAFE Filter, SAFE Filter Backwash Pump, SAFE Filter Solid Waste Pump	3#2,#8G,1-1/4"	1	1	1	3					1																
80-ELEC-MCC-0002	RO Feed Tanks - Recycled Water Pump #1	3#12,#12G,3/4"	1	1																							
80-ELEC-MCC-0002	RO Feed Tanks - Recycled Water Pump #2	3#12,#12G,3/4"	1	1																							
MV Cables	Trafo				1	4					1		1		4	4	1	3	18	26	3	4	1	2	10	No	18
80-ELEC-MCC-0001	Solids - Dewatering Sludge Feed Pumps	3#12,#12G,3/4"	1	1																							
80-ELEC-MCC-0001	Solids - Belt Filter Press Dewatering Sludge Belt Press, Solids dewatering angled conveyor, Belt Press Transfer Conveyor, Solids dewatering horizontal conveyor	3#8,#10G,3/4"	1	1	1	3					3																
80-ELEC-MCC-0001	Lighting Transformer (80-ELEC-LT-0001) for Headworks Area (LP (80-ELEC-LP-0001) and 120V Power Panel (80-ELEC-PP-0001)	3#1/0,#8G,1-1/2"	1	1																							
80-ELEC-MCC-0001	Power Panel for Headworks Area (kVA rating assumed) (80-ELEC-PP-0002)	3#1/0,#8G,1-1/2"	1	1	1	3	1	3	1	3	1	2	12	Section 4	4	3	3	2	12	29	3	3	4	2	24	No	18
80-ELEC-MCC-0001	HVAC (kW rating assumed)	3#2,#8G,1-1/4"	1	1																							
80-ELEC-MCC-0001	Influent - Disc Filter SAFE Filter, SAFE Filter Backwash Pump, SAFE Filter Solid Waste Pump	3#2,#8G,1-1/4"	1	1							1																
80-ELEC-MCC-0002	RO Feed Tanks - Recycled Water Pump #1	3#12,#12G,3/4"	1	1	1	3					1																
80-ELEC-MCC-0002	RO Feed Tanks - Recycled Water Pump #2	3#12,#12G,3/4"	1	1																							
SWB	50-MCC	15-500KCMIL,5#4/0G,(5)3"	5	3	5	3					5																
MV Cables	Trafo				1	4					1		1		4	4	1	3	18	26	3	4	1	2	10	No	18
80-ELEC-MCC-0001	Lighting Transformer (80-ELEC-LT-0001) for Headworks Area (LP (80-ELEC-LP-0001) and 120V Power Panel (80-ELEC-PP-0001)	3#1/0,#8G,1-1/2"	1	1	1	3					2																
80-ELEC-MCC-0001	Power Panel for Headworks Area (kVA rating assumed) (80-ELEC-PP-0002)	3#1/0,#8G,1-1/2"	1	1																							
80-ELEC-MCC-0001	HVAC (kW rating assumed)	3#2,#8G,1-1/4"	1	1			1	3	1	3		2	10	Section 5	4	3	2	2	12	24	3	3	5	2	29	No	18
80-ELEC-MCC-0001	Influent - Disc Filter SAFE Filter, SAFE Filter Backwash Pump, SAFE Filter Solid Waste Pump	3#2,#8G,1-1/4"	1	1	1	3					1																
SWB	50-MCC	15-500KCMIL,5#4/0G,(5)3"	5	3	5	3					5																
MV Cables	Trafo				1	4					1		1		4	4	1	3	18	26	3	4	1	2	10	No	18
SWB	50-MCC	15-500KCMIL,5#4/0G,(5)3"	5	3	5	3	1	3	1	3	6	0	6	Section 6	4	3	2	2	12	24	3	3	3	2	19	No	18

SITE OVERALL DUCTBANK DETAILS

NO SCALE

NOTES:

1. *SEE DRAWINGS 00-E-001 AND 00-E-002 FOR ELECTRICAL LEGEND, ABBREVIATIONS AND NOTES.*

60% SUBMITTAL - NOT FOR CONSTRUCTION

NO.	BY	CHK	APP	DATE	REVISIONS AND RECORD OF USE
B	JSL	MJK	EVB	7/30/2019	60% SUBMITTAL

BLACK & VEATCH

JOINT VENTURE

BLACK & VEATCH

FILANC

CITY OF MORRO BAY
MORRO BAY WRF
RECLAMATION FACILITY (WRF)

SITE - OVERALL ELECTRICAL DUCTBANK DETAILS

DESIGNED: JSL
DETAILED: SBC
CHECKED:
APPROVED:
DATE:

0 1/2 1
IF THIS BAR DOES NOT MEASURE 1" THEN DRAWING IS NOT TO FULL SCALE

PROJECT NO.
400530

10-E-601
SHEET
1 OF 2

FB0000A
D400530
PLOTTED: 7/29/2019 11:05 PM FILE: C:\PWBatchPDF\Process\400530 - Morro Bay WRF\400530-10-E-601.dwg

FROM	TO	CABLE SIZE	No of Conduits	Size of conduits as per load list	No of Conduits - Power	Size of conduits listed as per standard size	No of Conduits - Control	Size of Control Conduits	No of Conduits - Signal	Size of Signal Conduits	Used Conduits (Power+ Control+Signal)	Spare Conduits	Total Conduits	Section Number	Bottom Depth	Conduit Size	Layers of Conduit	Gap between the conduits	Top Cover Depth	Total Depth (inch)	Side width	Conduit Size	Layers of Conduit	Gap between the conduits	Total Width	Concrete Encased	Top Burial Depth
80-ELEC-MCC-0001	Headworks - Headworks Package #1	3#8,#10G,3/4"	1	1																							
80-ELEC-MCC-0001	Headworks - Headworks Package #2	3#8,#10G,3/4"	1	1	1	3					4																
80-ELEC-MCC-0001	Headworks - Odor Control System LCP	3#12,#12G,3/4"	1	1																							
80-ELEC-MCC-0001	Headworks - Fine Screen Package #1	3#12,#12G,3/4"	1	1																							
80-ELEC-MCC-0001	Headworks - Fine Screen Package #2	3#12,#12G,3/4"	1	1	1	3					1																
80-ELEC-MCC-0001	Headworks - Fine Screen Screw Conveyor and Discharge Chute	3#12,#12G,3/4"	1	1																							
80-ELEC-MCC-0002	MBR - Anoxic Mixer #1	3#12,#12G,3/4"	1	1																							
80-ELEC-MCC-0002	MBR - Anoxic Mixer #2	3#12,#12G,3/4"	1	1	1	3					1																
80-ELEC-MCC-0002	MBR - RAS Deox Mixer	3#12,#12G,3/4"	1	1																							
80-ELEC-MCC-0002	MBR - Filtrate Pump #1	3#2,#8G,1-1/4"	1	1																							
80-ELEC-MCC-0002	MBR - Filtrate Pump #2	3#2,#8G,1-1/4"	1	1	1	3					1																
80-ELEC-MCC-0002	MBR - BNR Aeration Blower #1	3#2/0,#6G,2"	1	2																							
80-ELEC-MCC-0002	MBR - BNR Aeration Blower #2	3#2/0,#6G,2"	1	2	1	3					1																
80-ELEC-MCC-0002	MBR - BNR Aeration Blower #3	3#2/0,#6G,2"	1	2			2	3	1	3		3	16	Section 7	4	3	4	2	4	26	4	3	4	2	26	Yes	24
80-ELEC-MCC-0002	MBR - Rotary Lobe Membrane Sour Blower #1 LCP	3#2,#8G,1-1/4"	1	1																							
80-ELEC-MCC-0002	MBR - Rotary Lobe Membrane Sour Blower #2 LCP	3#2,#8G,1-1/4"	1	1	1	3					1																
80-ELEC-MCC-0002	MBR - Drain Pump	3#12,#12G,3/4"	1	1																							
80-ELEC-MCC-0002	BNR - WAS Pump	3#12,#12G,3/4"	1	1																							
80-ELEC-MCC-0002	BNR - Scum Pump	3#12,#12G,3/4"	1	1	1	3					1																
80-ELEC-MCC-0002	MBR - Feed Pump #1	3#8,#10G,3/4"	1	1																							
80-ELEC-MCC-0002	MBR - Feed Pump #2	3#8,#10G,3/4"	1	1																							
80-ELEC-MCC-0002	RO Feed Tanks - Recycled Water Pump #1	3#12,#12G,3/4"	1	1	1	3					1																
80-ELEC-MCC-0002	RO Feed Tanks - Recycled Water Pump #2	3#12,#12G,3/4"	1	1																							
80-ELEC-MCC-0002	Lighting Transformer (80-ELEC-LT-0002) for MBR Area (LP (80-ELEC-LP-0002) and 120V Power Panel (80-ELEC-PP-0003)	3#1/0,#8G,1-1/2"	1	2	1	3					1																
80-ELEC-MCC-0002	Power Panel for MBR Area (kVA rating assumed) (80-ELEC-PP-0004)	3#1/0,#8G,1-1/2"	1	2	1	3					1																
80-ELEC-MCC-0002	HVAC (kW rating assumed)	3#2,#8G,1-1/4"	1	1																							
80-ELEC-MCC-0002	RO Feed Tanks - Recycled Water Pump #1	3#12,#12G,3/4"	1	1	1	3	1	3	1	3	3	1	4	Section 8	4	3	1	2	4	11	4	3	4	2	26	Yes	24
80-ELEC-MCC-0002	RO Feed Tanks - Recycled Water Pump #2	3#12,#12G,3/4"	1	1																							
MV Cables	Trafo				1	4					1		1		4	4	1	3	18	26	3	4	1	2	10	No	18
SWB	50-MCC	15-500KCMIL,5#4/0G,(5)3"	5	3	5	3	1	3	1	3	7	3	12	Section 9	4	3	3	2	12	29	3	3	4	2	24	No	18
50-ELEC-MCC-0001	Maintainence Bldg		2	3	2	3					2																
MV Cables	Trafo				1	4					1		1		4	4	1	3	18	26	3	4	1	2	10	No	18
50-ELEC-MCC-0001	Product Water - IPR Pump #1	3#12,#12G,3/4"	1	1																							
50-ELEC-MCC-0001	Product Water - IPR Pump #2	3#12,#12G,3/4"	1	1	1	3					2																
50-ELEC-MCC-0001	Product Water - IPR Pump #3	3#12,#12G,3/4"	1	1																							
50-ELEC-MCC-0001	Lighting Transformer (50-ELEC-LT-0001) for RO Area (LP (50-ELEC-LP-0001) and 120V Power Panel (50-ELEC-PP-0001)	3#1/0,#8G,1-1/2"	1	2	1	3	1	3	1	3	1	2	8	Section 10	4	3	2	2	12	24	3	3	4	2	24	No	18
50-ELEC-MCC-0001	Power Panel for RO Area (kVA rating assumed) (50-ELEC-PP-0002)	3#1/0,#8G,1-1/2"	1	2	1	3					1																
50-ELEC-MCC-0001	Operations Building HVAC	3#1/0,#8G,1-1/2"	1	2	1	3					1																
50-ELEC-MCC-0001	Maintenance Building HVAC	3#4,#10G,1-1/4"	1	2	1	3					1																
SWB	50-MCC	15-500KCMIL,5#4/0G,(5)3"	5	3	5	3					6																
50-ELEC-MCC-0001	Product Water - IPR Pump #1	3#12,#12G,3/4"	1	1																							
50-ELEC-MCC-0001	Product Water - IPR Pump #2	3#12,#12G,3/4"	1	1	1	3					1																
50-ELEC-MCC-0001	Product Water - IPR Pump #3	3#12,#12G,3/4"	1	1																							
50-ELEC-MCC-0001	Lighting Transformer (50-ELEC-LT-0001) for RO Area (LP (50-ELEC-LP-0001) and 120V Power Panel (50-ELEC-PP-0001)	3#1/0,#8G,1-1/2"	1	2	1	3	1	3	1	3	1	4	15	Section 11	4	3	3	2	4	21	4	3	5	2	31	Yes	24
50-ELEC-MCC-0001	Power Panel for RO Area (kVA rating assumed) (50-ELEC-PP-0002)	3#1/0,#8G,1-1/2"	1	2	1	3					1																
50-ELEC-MCC-0001	Operations Building HVAC	3#1/0,#8G,1-1/2"	1	2	1	3					1																
50-ELEC-MCC-0001	Maintenance Building HVAC	3#4,#10G,1-1/4"	1	2	1	3					1																
50-ELEC-MCC-0001	Product Water - Outfall Pump #1	3#2/0,#6G,2"	1	2	1	3					2																
50-ELEC-MCC-0001	Product Water - Outfall Pump #2	3#2/0,#6G,2"	1	2	1	3					1																
50-ELEC-MCC-0001	Product Water - Outfall Pump #3	3#2/0,#6G,2"	1	2	1	3	1	3	1	3	1	2	9	Section 12	4	3	3	2	4	21	4	3	3	2	21	Yes	24
50-ELEC-MCC-0001	Product Water - Outfall Pump #4	3#2/0,#6G,2"	1	2	1	3					1																
50-ELEC-MCC-0001	Chemical Dosing Area		2	3	2	3					2																
MV Cables	Trafo				1	4					1		1		4	4	1	3	18	26	3	4	1	2	10	No	18
50-ELEC-MCC-0001	Lighting Transformer (50-ELEC-LT-0001) for RO Area (LP (50-ELEC-LP-0001) and 120V Power Panel (50-ELEC-PP-0001)	3#1/0,#8G,1-1/2"	1	2	1	3	1	3	1	3	3	1	4	Section 13	4	3	2	2	12	24	3	3	4	2	24	No	18
50-ELEC-MCC-0001	Power Panel for RO Area (kVA rating assumed) (50-ELEC-PP-0002)	3#1/0,#8G,1-1/2"	1	2		3					0																
50-ELEC-MCC-0001	Operations Building HVAC	3#1/0,#8G,1-1/2"	1	2		3					0																
MV Cables	Trafo				1	4					1		1	Section 14	4	4	1	3	18	26	3	4	1	2	10	No	18
50-ELEC-MCC-0001	Lighting Transformer (50-ELEC-LT-0001) for RO Area (LP (50-ELEC-LP-0001) and 120V Power Panel (50-ELEC-PP-0001)	3#1/0,#8G,1-1/2"	1	2	1	3	1	3	1	3	3	1	4	Section 15	4	3	1	2	4	11	4	3	4	2	26	Yes	24
50-ELEC-MCC-0001	Power Panel for RO Area (kVA rating assumed) (50-ELEC-PP-0002)	3#1/0,#8G,1-1/2"	1	2		3					0																
50-ELEC-MCC-0001	Lighting Transformer (50-ELEC-LT-0001) for RO Area (LP (50-ELEC-LP-0001) and 120V Power Panel (50-ELEC-PP-0001)	3#1/0,#8G,1-1/2"	1	2	1	3	1	3	1	3	3	1	4	Section 16	4	3	1	2	4	11	4	3	4	2	26	Yes	24
50-ELEC-MCC-0001	Power Panel for RO Area (kVA rating assumed) (50-ELEC-PP-0002)	3#1/0,#8G,1-1/2"	1	2		3					0																
50-ELEC-MCC-0001	Lighting Transformer (50-ELEC-LT-0001) for RO Area (LP (50-ELEC-LP-0001) and 120V Power Panel (50-ELEC-PP-0001)	3#1/0,#8G,1-1/2"	1	2	1	3	1	3	1	3	3	1	4	Section 17	4	3	1	2	4	11	4	3	4	2	26	Yes	24
50-ELEC-MCC-0001	Power Panel for RO Area (kVA rating assumed) (50-ELEC-PP-0002)	3#1/0,#8G,1-1/2"	1	2		3					0																
50-ELEC-MCC-0001	Lighting Transformer (50-ELEC-LT-0001) for RO Area (LP (50-ELEC-LP-0001) and 120V Power Panel (50-ELEC-PP-0001)	3#1/0,#8G,1-1/2"	1	2	1	3	1	3	1	3	3	1	4	Section 18	4	3	1	2	4	11	4	3	4	2	26	Yes	24
50-ELEC-MCC-0001	Power Panel for RO Area (kVA rating assumed) (50-ELEC-PP-0002)	3#1/0,#8G,1-1/2"	1	2		3					0																

SITE OVERALL DUCTBANK DETAILS
NO SCALE

NOTES:

1. SEE DRAWINGS 00-E-001 AND 00-E-002 FOR ELECTRICAL LEGEND, ABBREVIATIONS AND NOTES.

60% SUBMITTAL - NOT FOR CONSTRUCTION

NO.	BY	CHK	APP	DATE	REVISIONS AND RECORD OF USE
B	JSL	MJK	EVB	7/30/2019	60% SUBMITTAL

BLACK & VEATCH JOINT VENTURE — BLACK & VEATCH — FILANC

CITY OF MORRO BAY
MORRO BAY WRF
RECLAMATION FACILITY (WRF)

SITE - OVERALL ELECTRICAL DUCTBANK DETAILS

DESIGNED: JSL
DETAILED: SBC
CHECKED:
APPROVED:
DATE:

0 1/2 1
IF THIS BAR DOES NOT MEASURE 1" THEN DRAWING IS NOT TO FULL SCALE

PROJECT NO. 400530

10-E-602
SHEET 2 OF 2

F09000A
D400330
PLOTTED: 7/29/2019 11:06 PM FILE: C:\PWBatchPDF\Process\400530 - Morro Bay WRF\400530-10-E-602.dwg

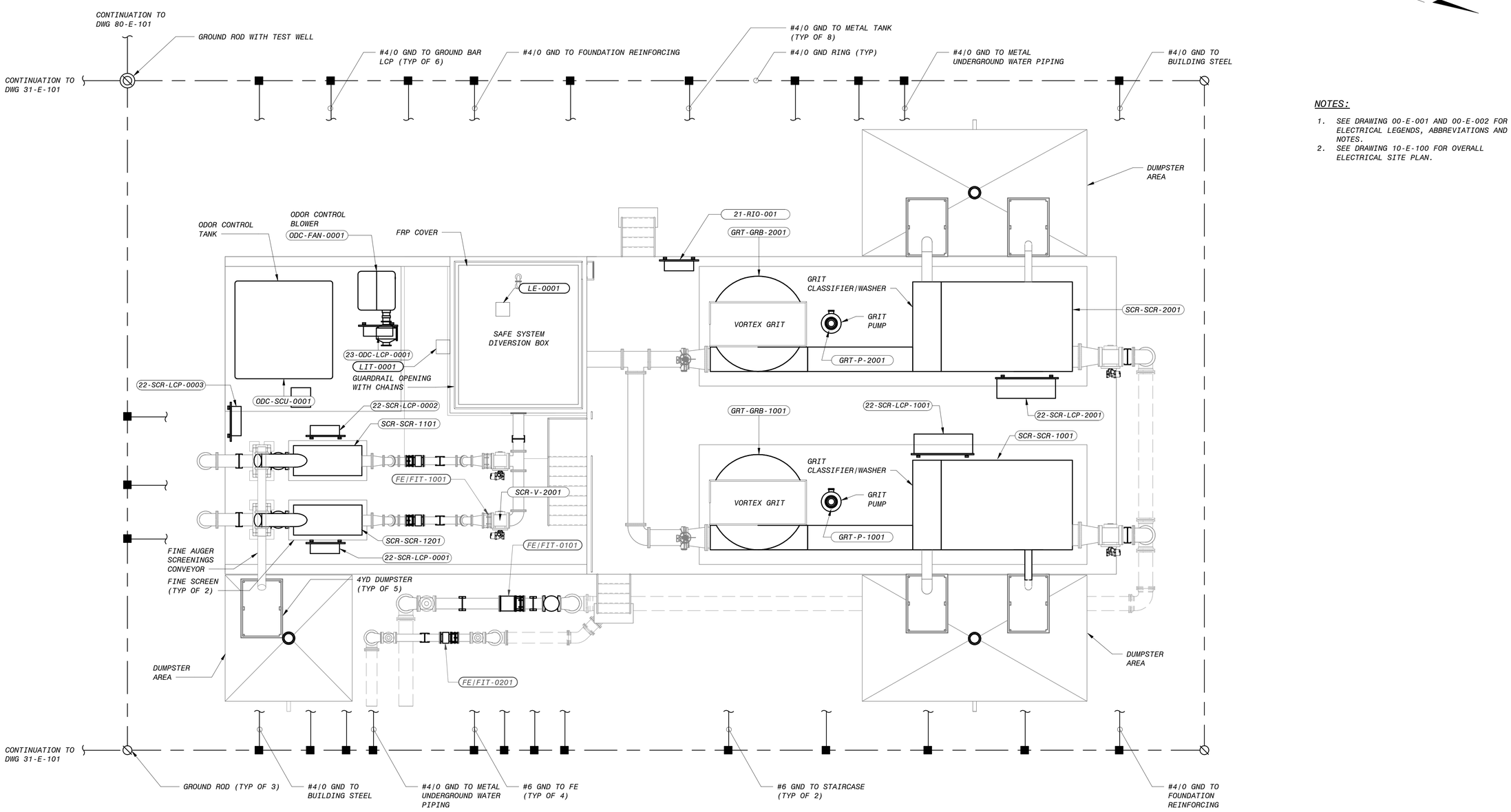

HEADWORKS AREA POWER AND GROUNDING PLAN

3/16" = 1'-0"

NOTES:

1. SEE DRAWING 00-E-001 AND 00-E-002 FOR ELECTRICAL LEGENDS, ABBREVIATIONS AND NOTES.
2. SEE DRAWING 10-E-100 FOR OVERALL ELECTRICAL SITE PLAN.

NO.	BY	CHK	APP	DATE	REVISIONS AND RECORD OF USE
B	JSL	MJK	EVB	7/30/2019	60% SUBMITTAL

BLACK & VEATCH

JOINT VENTURE

FILANC

BLACK & VEATCH

CITY OF MORRO BAY
MORRO BAY WATER
RECLAMATION FACILITY (WRF)

HEADWORKS AREA
ELECTRICAL
POWER AND GROUNDING PLAN

DESIGNED: JSL
DETAILED: SBC
CHECKED:
APPROVED:
DATE:

0 1/2 1
IF THIS BAR DOES NOT MEASURE 1" THEN DRAWING IS NOT TO FULL SCALE

PROJECT NO.
400530

21-E-101
SHEET
OF

6" 4' 2' 0' 5' 10'
3/16" = 1'-0"

60% SUBMITTAL - NOT FOR CONSTRUCTION

PLOTTED: 30-07-2019 16:13:02
D400530

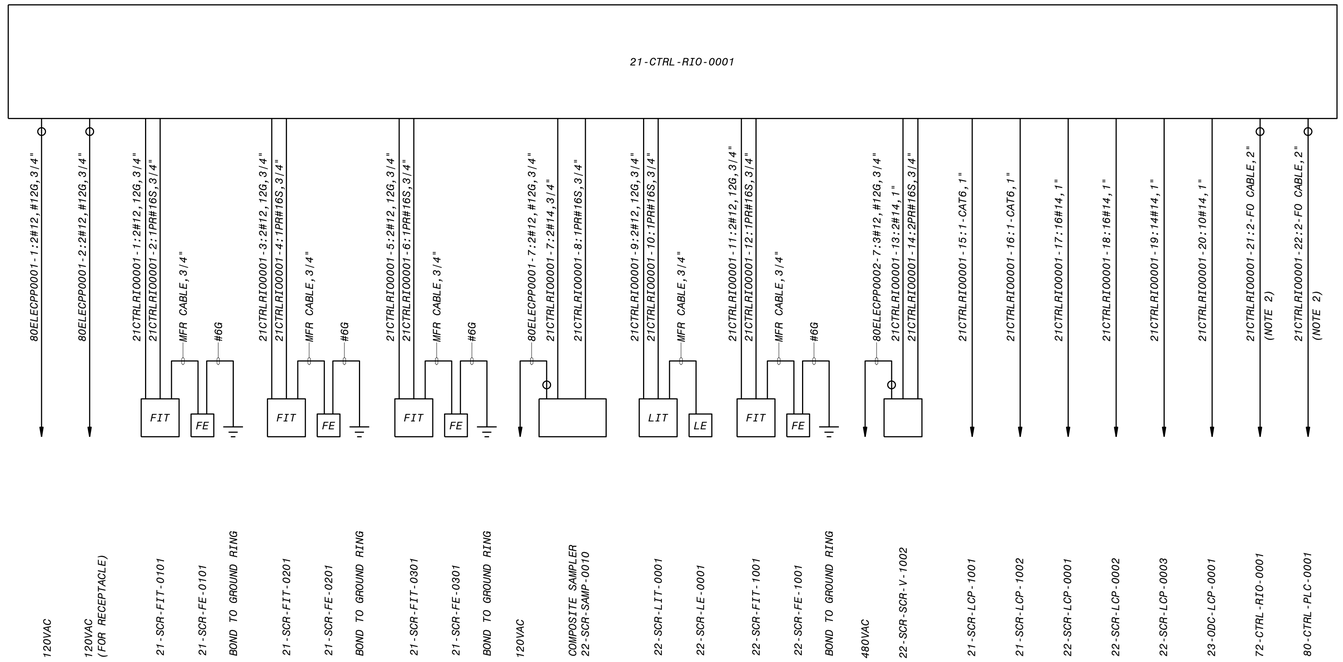

21-CTRL-RIO-0001 (HEADWORKS AREA)
ONE-LINE DIAGRAM
NO SCALE

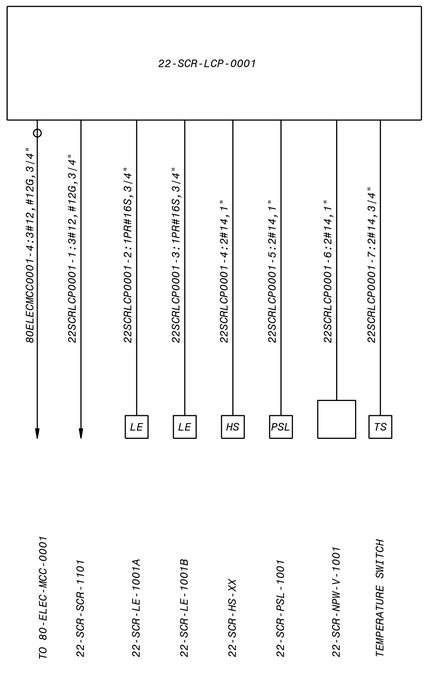

21-SCR-LCP-0001 (HEADWORKS AREA)
ONE-LINE DIAGRAM
NO SCALE

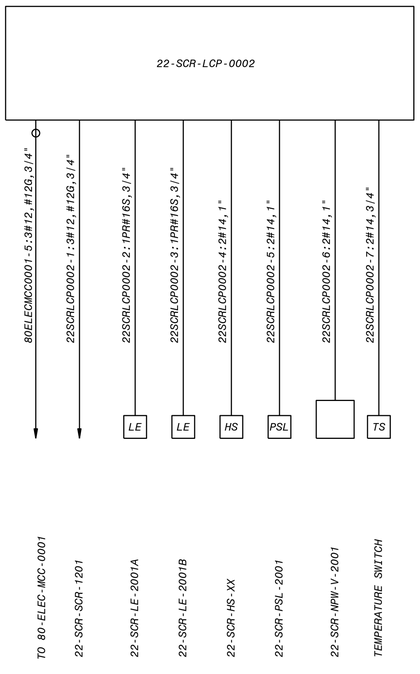

21-SCR-LCP-0002 (HEADWORKS AREA)
ONE-LINE DIAGRAM
NO SCALE

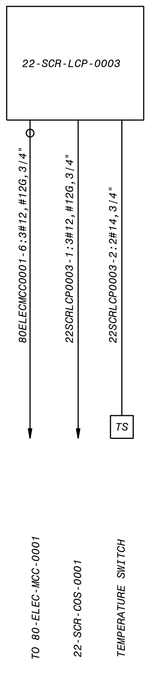

21-SCR-LCP-0003 (HEADWORKS AREA)
ONE-LINE DIAGRAM
NO SCALE

NOTES:

1. SEE DRAWINGS 00-E-001 AND 00-E-002 FOR ELECTRICAL LEGEND, ABBREVIATIONS AND NOTES.
2. SEE DRAWING 00-I-701 FOR FIBRE OPTIC CABLE REQUIREMENTS.

60% SUBMITTAL- NOT FOR CONSTRUCTION

NO.	BY	CHK	APP	DATE	REVISIONS AND RECORD OF USE
B	JSL	MJK	EVB	7/30/2019	60% SUBMITTAL

BLACK & VEATCH
JOINT VENTURE
FILANC
BLACK & VEATCH

CITY OF MORRO BAY
MORRO BAY WRF
RECLAMATION FACILITY (WRF)

HEADWORKS AREA
ELECTRICAL
21-CTRL-RIO-0001 ONE-LINE DIAGRAM

DESIGNED: JSL
DETAILED: SBC
CHECKED:
APPROVED:
DATE:

0 1/2 1
IF THIS BAR DOES NOT MEASURE 1" THEN DRAWING IS NOT TO FULL SCALE

PROJECT NO.
400530

21-E-711
SHEET
OF

FB0000A
D400530
PLOTTED: 7/30/2019 1:54 AM FILE: C:\PWBatchPDF\Process\400530 - Morro Bay WRF\400530-21-E-711.dwg

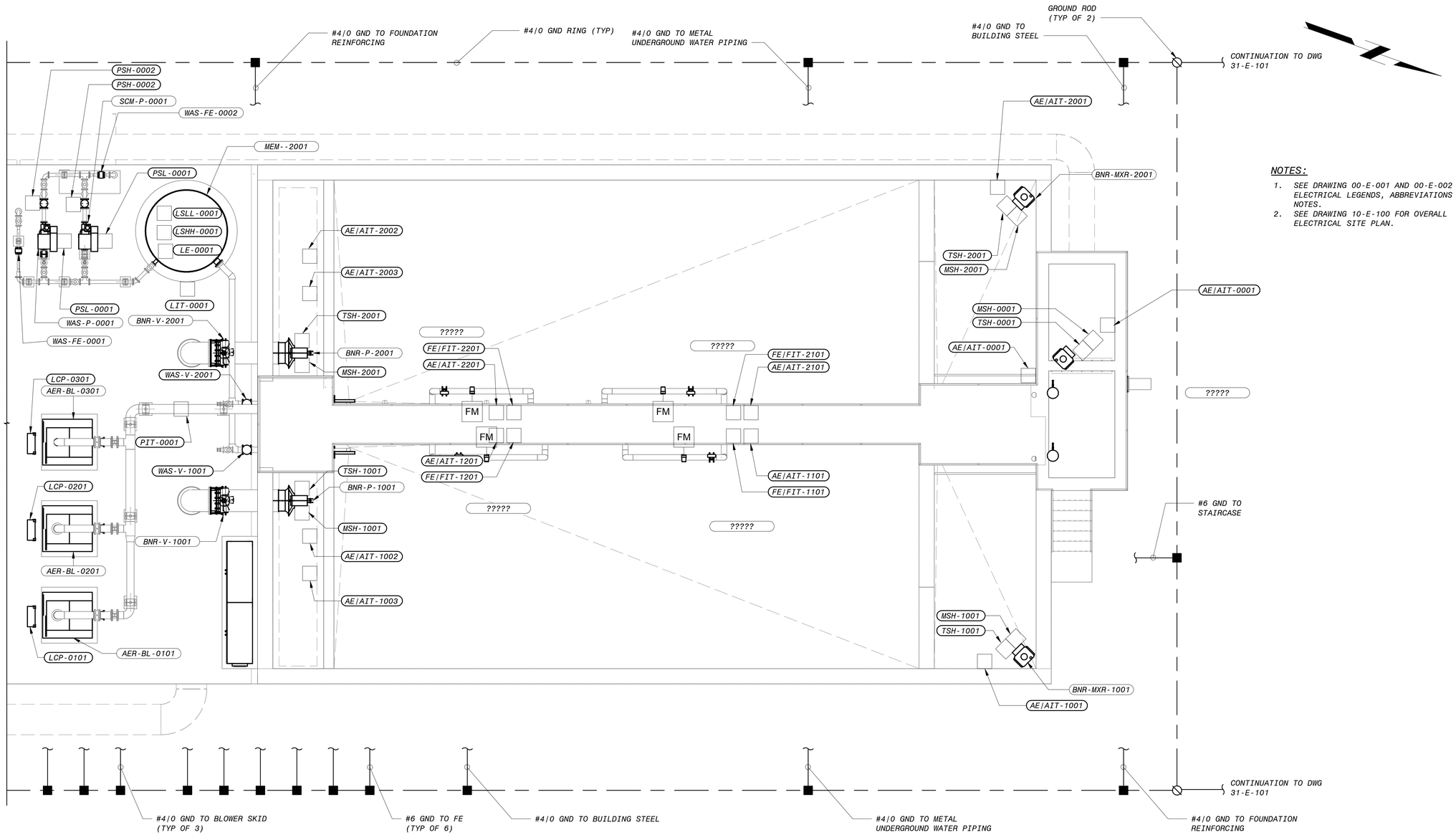

TREATMENT AREA - BNR BASIN POWER AND GROUNDING PLAN

3/16" = 1'-0"

NOTES:

1. SEE DRAWING 00-E-001 AND 00-E-002 FOR ELECTRICAL LEGENDS, ABBREVIATIONS AND NOTES.
2. SEE DRAWING 10-E-100 FOR OVERALL ELECTRICAL SITE PLAN.

NO.	BY	CHK	APP	DATE	REVISIONS AND RECORD OF USE
B	JSL	MJK	EVB	7/30/2019	60% SUBMITTAL

BLACK & VEATCH

JOINT VENTURE

FILANC

BLACK & VEATCH

CITY OF MORRO BAY
MORRO BAY WATER
RECLAMATION FACILITY (WRF)

TREATMENT AREA - BNR BASIN
ELECTRICAL
POWER AND GROUNDING PLAN

DESIGNED: JSL
DETAILED: SBC
CHECKED:
APPROVED:
DATE:

0 1/2 1

IF THIS BAR DOES NOT MEASURE 1" THEN DRAWING IS NOT TO FULL SCALE

PROJECT NO.
400530

31-E-101
SHEET
OF

6" 4' 2' 0' 5' 10'

3/16" = 1'-0"

60% SUBMITTAL- NOT FOR CONSTRUCTION

PLOTTED: 30-07-2019 16:25:55
D400530

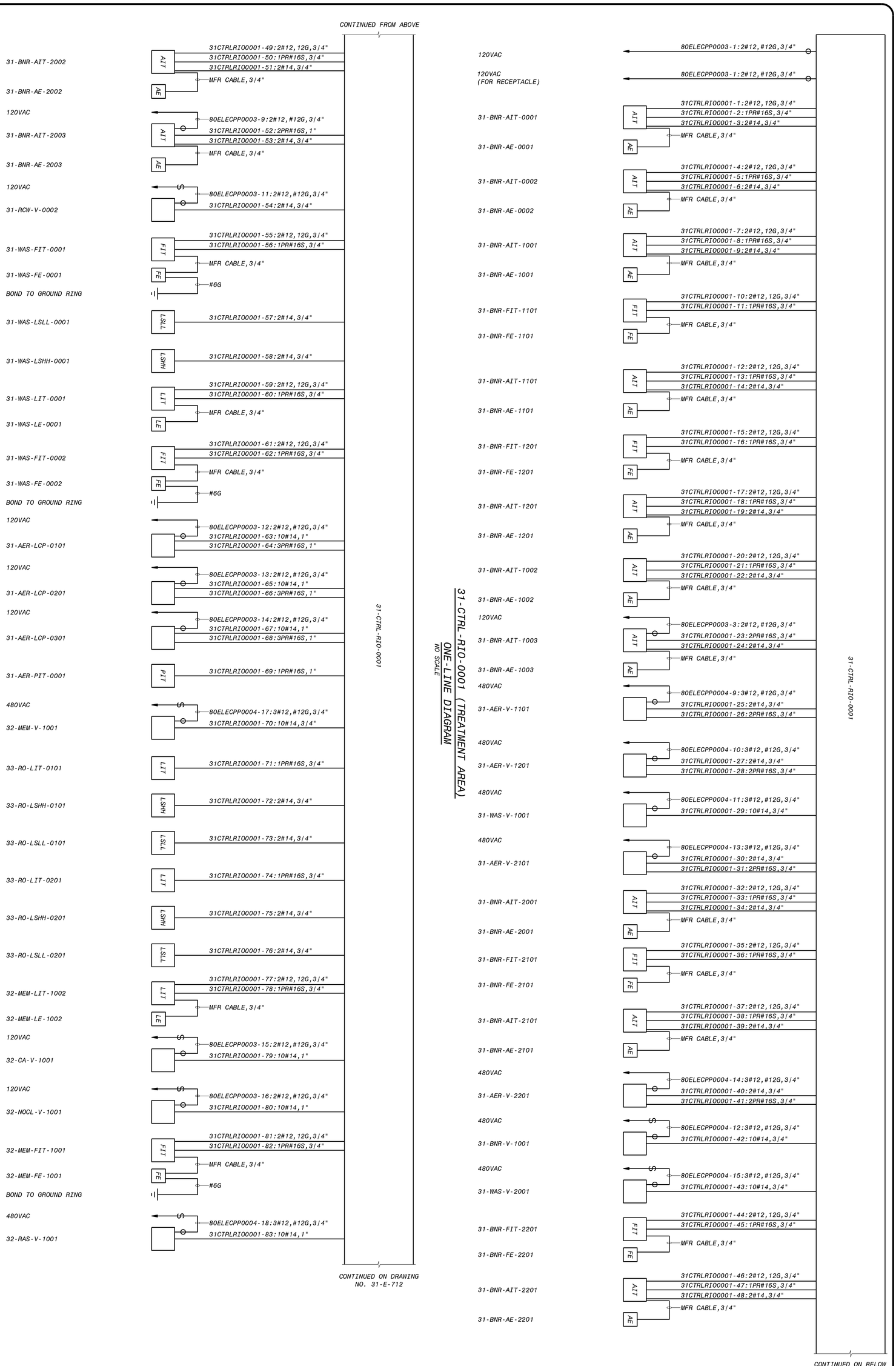

60% SUBMITTAL - NOT FOR CONSTRUCTION

NOTES:
1. SEE DRAWINGS 00-E-001 AND 00-E-002 FOR ELECTRICAL LEGEND, ABBREVIATIONS AND NOTES.

31-E-711	CITY OF MORRO BAY MORRO BAY WRF RECLAMATION FACILITY (WRF)
SHEET 1 OF 2	TREATMENT AREA ELECTRICAL 31-CTRL-RIO-0001 ONE-LINE DIAGRAM
PROJECT NO. 400530	BLACK & VEATCH JOINT VENTURE FILANC BLACK & VEATCH
IF THIS BAR DOES NOT MEASURE 1" THEN DRAWING IS NOT FULL SCALE	
DESIGNED: JSL DETAILED: SBC CHECKED: APPROVED: DATE:	

DATE	REVISIONS AND RECORD OF USE	NO.	BY	CHK	APP
7/30/2019	60% SUBMITTAL	B	JSL	MJK	EVB

CONTINUED FROM DRAWING NO. 31-E-711

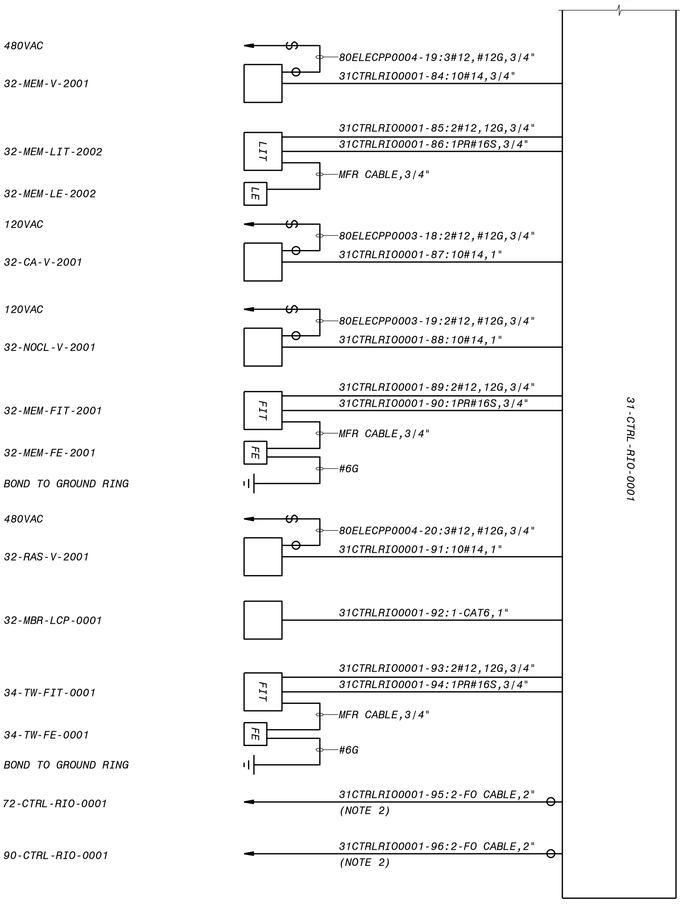

31-CTRL-RIO-0001 (TREATMENT AREA) ONE-LINE DIAGRAM

NO SCALE

60% SUBMITTAL - NOT FOR CONSTRUCTION

NOTES:

1. SEE DRAWINGS 00-E-001 AND 00-E-002 FOR ELECTRICAL LEGEND, ABBREVIATIONS AND NOTES.
2. SEE DRAWING 00-T-701 FOR FIBRE OPTIC CABLE REQUIREMENT.

DESIGNED: JSL
DETAILED: SBC
CHECKED:
APPROVED:
DATE:

0 1/2 1
IF THIS BAR DOES NOT MEASURE 1" THEN DRAWING IS NOT PLOTTED AT FULL SCALE

PROJECT NO. 400530

31-E-712
SHEET 2 OF 2

CITY OF MORRO BAY
MORRO BAY WRF
RECLAMATION FACILITY (WRF)

TREATMENT AREA
ELECTRICAL
31-CTRL-RIO-0001 ONE-LINE DIAGRAM

BLACK & VEATCH
JOINT VENTURE
FILANC BLACK & VEATCH

DATE	REVISIONS AND RECORD OF USE	NO.	BY	CHK	APP
7/30/2019	60% SUBMITTAL	B	JSL	MJK	EVB

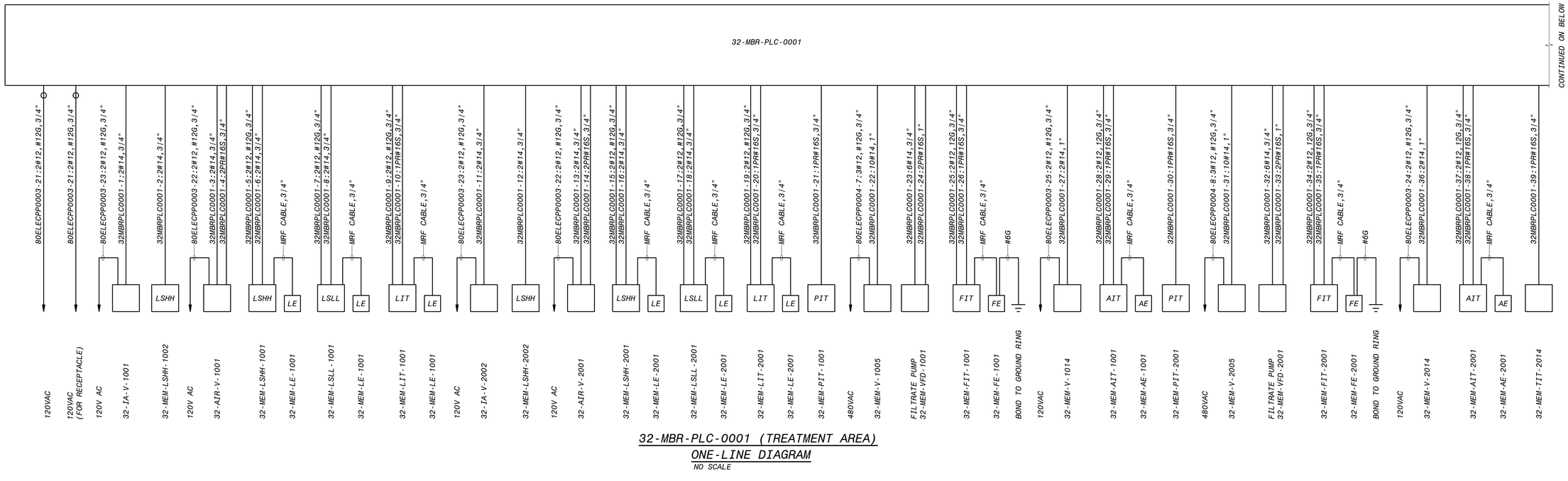

32-MBR-PLC-0001 (TREATMENT AREA)
ONE-LINE DIAGRAM
NO SCALE

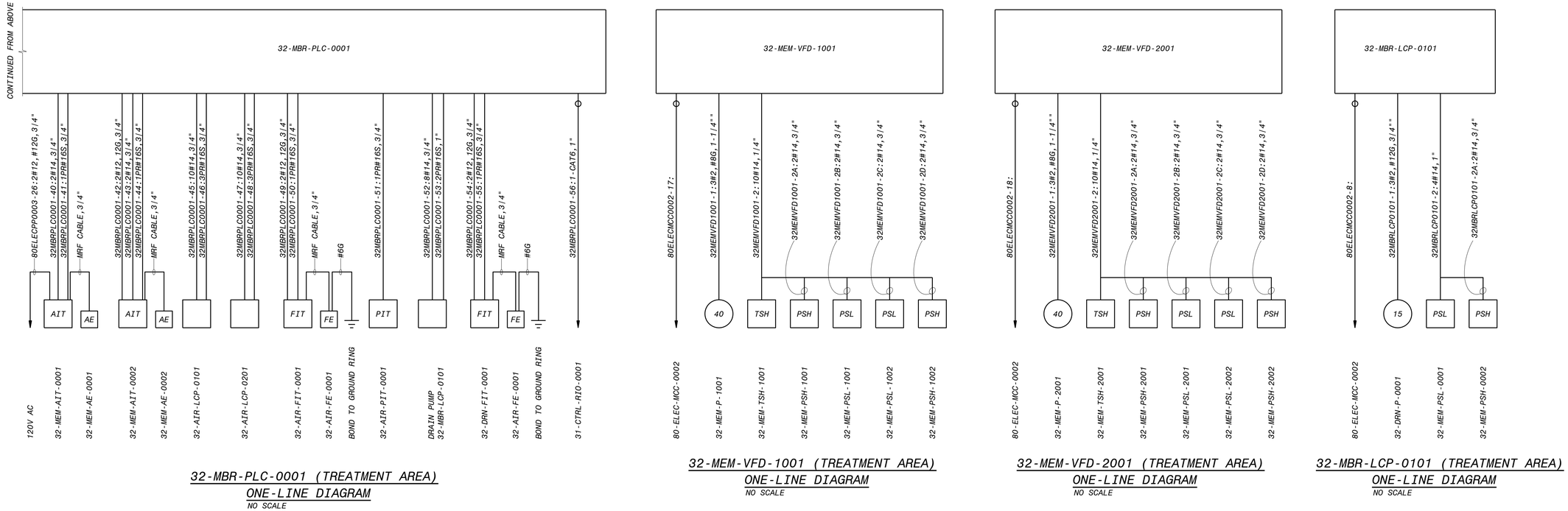

32-MBR-PLC-0001 (TREATMENT AREA)
ONE-LINE DIAGRAM
NO SCALE

32-MEM-VFD-1001 (TREATMENT AREA)
ONE-LINE DIAGRAM
NO SCALE

32-MEM-VFD-2001 (TREATMENT AREA)
ONE-LINE DIAGRAM
NO SCALE

32-MBR-LCP-0101 (TREATMENT AREA)
ONE-LINE DIAGRAM
NO SCALE

NOTES:

1. SEE DRAWINGS 00-E-001 AND 00-E-002 FOR ELECTRICAL LEGEND, ABBREVIATIONS AND NOTES.

60% SUBMITTAL- NOT FOR CONSTRUCTION

NO.	BY	CHK	APP
B	JSL	MJK	EVB

DATE	REVISIONS AND RECORD OF USE
7/30/2019	60% SUBMITTAL

BLACK & VEATCH

JOINT VENTURE

FILANC

BLACK & VEATCH

CITY OF MORRO BAY
MORRO BAY WRF
RECLAMATION FACILITY (WRF)

TREATMENT AREA
ELECTRICAL
32-MBR-PLC-0001 ONE-LINE DIAGRAM

DESIGNED: JSL
DETAILED: SBC
CHECKED:
APPROVED:
DATE:

0 1/2 1
IF THIS BAR DOES NOT MEASURE 1" THEN DRAWING IS NOT TO FULL SCALE

PROJECT NO.
400530

31-E-713
SHEET
OF

FB0000A
D400530
PLOTTED: 7/29/2019 11:07 PM FILE: C:\PWBatchPDF\Process\400530 - Morro Bay WRF\400530-31-E-713.dwg

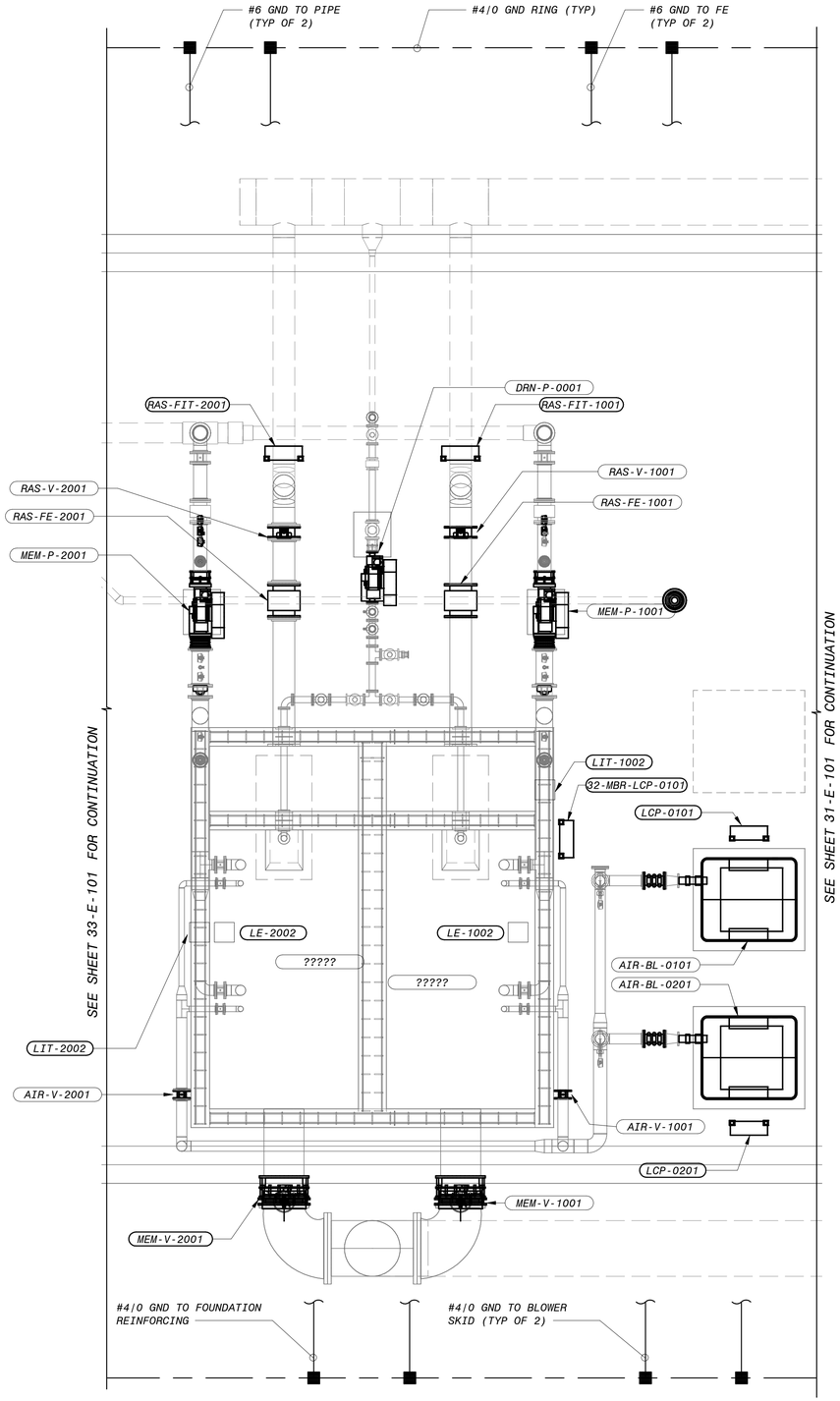

TREATMENT AREA - MBR SYSTEM POWER AND GROUNDING PLAN

1/4" = 1'-0"

NOTES:

1. SEE DRAWING 00-E-001 AND 00-E-002 FOR ELECTRICAL LEGENDS, ABBREVIATIONS AND NOTES.
2. SEE DRAWING 10-E-100 FOR OVERALL ELECTRICAL SITE PLAN.

NO.	BY	CHK	APP	DATE	REVISIONS AND RECORD OF USE
B	JSL	MJK	EVB	7/30/2019	60% SUBMITTAL

BLACK & VEATCH

JOINT VENTURE

FILANC | BLACK & VEATCH

CITY OF MORRO BAY
MORRO BAY WATER
RECLAMATION FACILITY (WRF)

TREATMENT AREA - MBR SYSTEM
ELECTRICAL
POWER AND GROUNDING PLAN

DESIGNED: JSL
DETAILED: SBC
CHECKED:
APPROVED:
DATE:

0 1/2 1
IF THIS BAR DOES NOT MEASURE 1" THEN DRAWING IS NOT TO FULL SCALE

PROJECT NO.
400530

32-E-101
SHEET
OF

4' 2' 0' 4' 8'
1/4" = 1'-0"

60% SUBMITTAL- NOT FOR CONSTRUCTION

PLOTTED: 30-07-2019 16:25:56
D400530

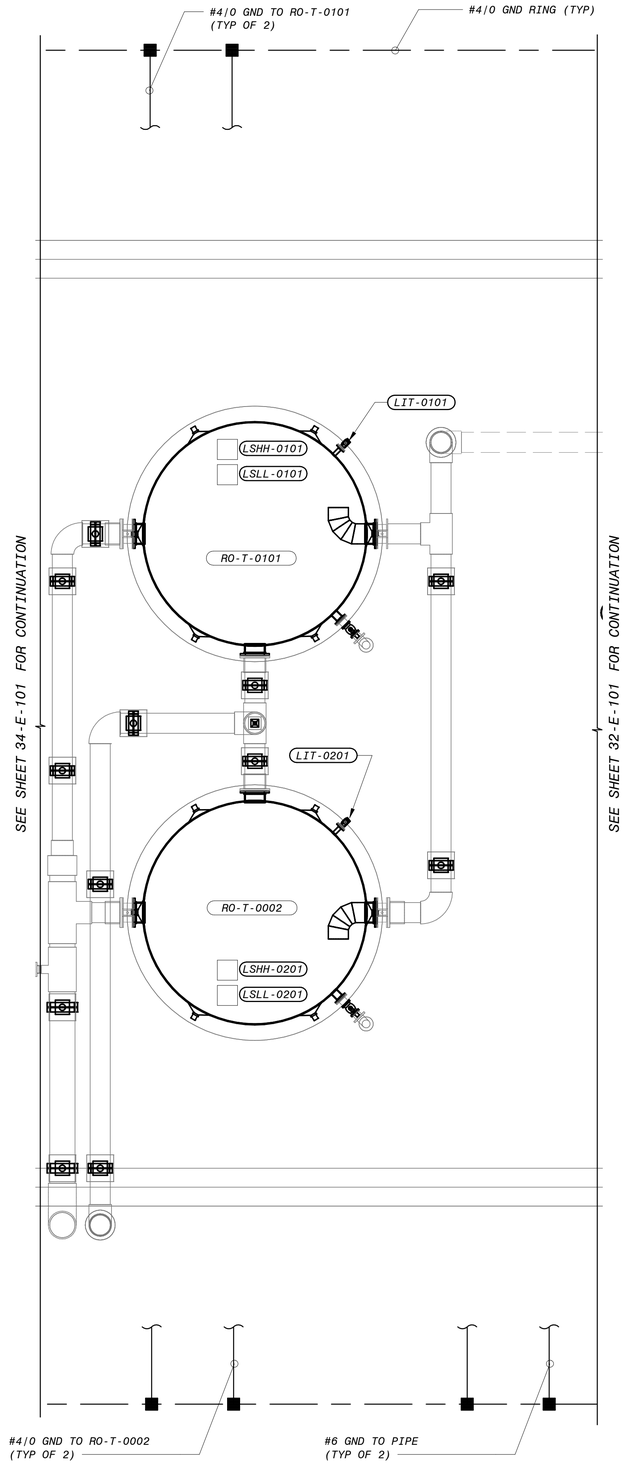

TREATMENT AREA - RO FEED TANKS POWER AND GROUNDING PLAN

1/4" = 1'-0"

NOTES:

1. SEE DRAWING 00-E-001 AND 00-E-002 FOR ELECTRICAL LEGENDS, ABBREVIATIONS AND NOTES.
2. SEE DRAWING 10-E-100 FOR OVERALL ELECTRICAL SITE PLAN.

NO.	BY	CHK	APP	DATE	REVISIONS AND RECORD OF USE
B	JSL	MJK	EVB	7/30/2019	60% SUBMITTAL

BLACK & VEATCH

JOINT VENTURE

BLACK & VEATCH

FILANC

CITY OF MORRO BAY
MORRO BAY WATER
RECLAMATION FACILITY (WRF)

TREATMENT AREA - RO FEED TANKS
ELECTRICAL
POWER AND GROUNDING PLAN

DESIGNED: JSL
DETAILED: SBC
CHECKED:
APPROVED:
DATE:

0 1/2 1
IF THIS BAR DOES NOT MEASURE 1" THEN DRAWING IS NOT TO FULL SCALE

PROJECT NO.
400530

33-E-101
SHEET
OF

4' 2' 0' 4' 8'
1/4" = 1'-0"

60% SUBMITTAL- NOT FOR CONSTRUCTION

PLOTTED: 30-07-2019 16:25:57
D400530

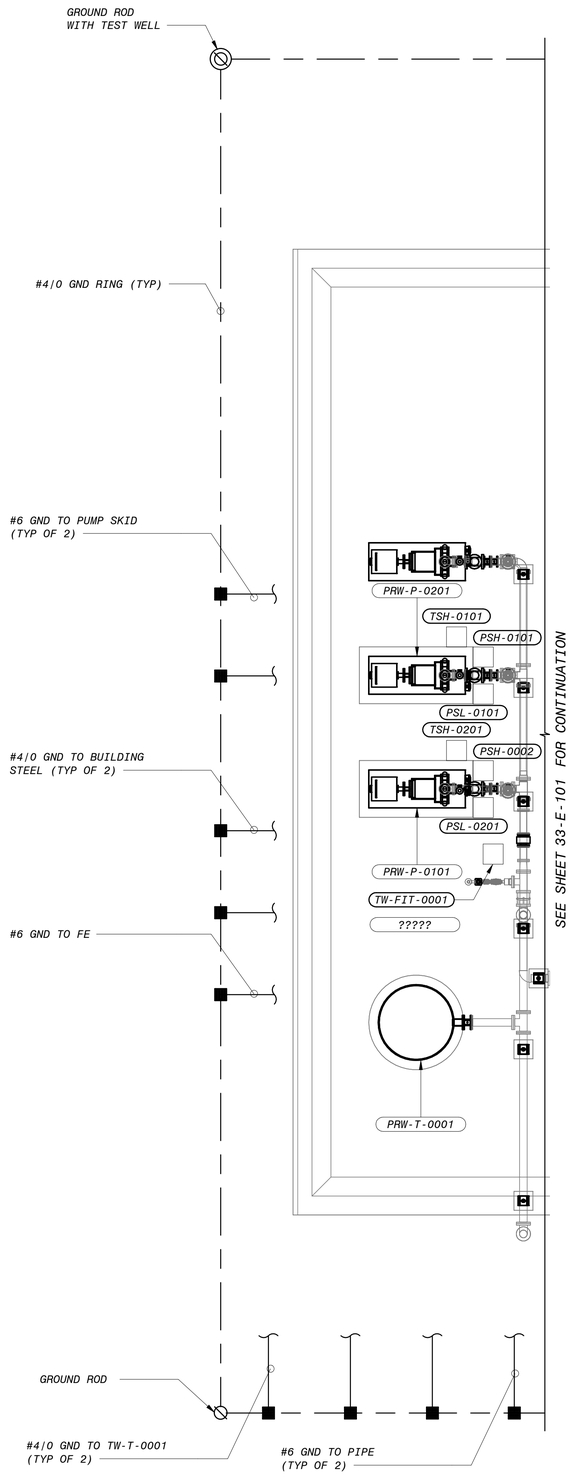

TRAETMENT AREA - RECYCLED WATER PUMPS POWER AND GROUNDING PLAN

1/4" = 1'-0"

NOTES:

1. SEE DRAWING 00-E-001 AND 00-E-002 FOR ELECTRICAL LEGENDS, ABBREVIATIONS AND NOTES.
2. SEE DRAWING 10-E-100 FOR OVERALL ELECTRICAL SITE PLAN.

4' 2' 0' 4' 8'

1/4" = 1'-0"

60% SUBMITTAL - NOT FOR CONSTRUCTION

NO.	BY	CHK	APP	DATE	REVISIONS AND RECORD OF USE
B	JSL	MJK	EVB	7/30/2019	60% SUBMITTAL

BLACK & VEATCH JOINT VENTURE

BLACK & VEATCH

FILANC

CITY OF MORRO BAY
MORRO BAY WATER
RECLAMATION FACILITY (WRF)

TRAETMENT AREA - RECYCLED WATER PUMPS
ELECTRICAL
POWER AND GROUNDING PLAN

DESIGNED: JSL
DETAILED: SBC
CHECKED:
APPROVED:
DATE:

0 1/2 1

IF THIS BAR DOES NOT MEASURE 1" THEN DRAWING IS NOT TO FULL SCALE

PROJECT NO.
400530

34-E-101
SHEET
OF

PLOTTED: 30-07-2019 16:25:57
D400530

PANEL BOARD: 50 ELEC PP 0001				BUS: COPPER			MAINS: 3P 150A MAIN BREAKER				
PHASE			SERVICE: 120/208V, 3PH, 4W, S/N	RATING: 150A			LOCATION: 50 ELECTRICAL BUILDING			PHASE	
'A'	'B'	'C'	MOUNTING: SURFACE								
V.A.	V.A.	V.A.	LOAD	P	BKR	CKT #	BKR	P	LOAD	V.A.	V.A.	V.A.
500			51-CTRL-RIO-0001, 51-CTRL-RIO-0001 (RECEPTACLE)	1	20	1 2	20	1	51-RO-V-0103	200		
	200		51 RO P 0001	1	20	3 4	20	1	51 CIP V 0103		200	
		200	51-RO-LCP-1001	1	20	5 6	20	1	61-RO-LCP-2001			200
200			51-RO-LCP-3001	1	20	7 8	20	1	61-CAL-V-0001	200		
	500		65 TW SAMP 0001	1	20	9 10	20	1	51 RO ANALYSER PANEL		500	
		200	52-UV-LCP-0001	1	20	11 12	20	1	62-TW ANALYSER PANEL			500
500			90-CTRL-RIO-0001, 90-CTRL-RIO-0001(RECEPTACLE)	1	20	13 14	20	1	90-NOCL-LCP-0101, 90-NOCL-LCP-0201	500		
	500		90-NOCL-LCP-0301, 90-NOCL-LCP-0401	1	20	15 16	20	1	90-NOCL-LCP-0501, 90-NOCL-LCP-0601		500	
		250	90-NOCL-LCP-0701	1	20	17 18	20	1	90-NAOH-LCP-0101, 90-NACH-LCP-0201			600
250			90-NAOH-LCP-0301	1	20	19 20	20	1	90-NSH-LCP-0101	250		
	250		90-ANTI-LCP-0101	1	20	21 22	20	1	90-CA-LCP-0101, 90-CA-LCP-0201		600	
		500	90-HS04-LCP-0101, 90-HS04-LCP-0201	1	20	23 24	20	1	90-POLF-LCP-0001			250
0			SPARE	1	20	25 26	20	1	SPARE	0		
	0		SPARE	1	20	27 28	20	1	SPARE		0	
		0	SPARE	1	20	29 30	20	1	SPARE			0
0			SPARE	1	20	31 32	20	1	SPARE	0		
	0		SPARE	1	20	33 34	20	1	SPARE		0	
		0	SPARE	1	20	35 36	20	1	SPARE			0
0			SPARE	1	20	37 38	20	1	SPARE	0		
	0		SPARE	1	20	39 40	20	1	SPARE		0	
		0	SPARE	1	20	41 42	20	1	SPARE			0
1450			TOTAL "A"			2600			TOTAL "A"	1150		
	1450		TOTAL "B"			3250			TOTAL "B"		1800	
		1150	TOTAL "C"			2700			TOTAL "C"			1550
			TOTAL			8550						

RO/UV BUILDING 50-ELEC-PP-0001
POWER PANELS SCHEDULE
NO SCALE

			PANEL BOARD: 50 ELEC PP 0002	BUS: COPPER				MAINS: 3P 200A MAIN BREAKER			
PHASE			SERVICE: 480 3PH, 4W, S/N	RATING: 200A				LOCATION: 50 ELECTRICAL		PHASE	
'A'	'B'	'C'	MOUNTING: SURFACE					BUILDING			
V.A.	V.A.	V.A.	LOAD	P	BKR	CKT #	BKR	P	LOAD	V.A.	V.A.	V.A.
345	345	345	51-RO-V-0012	3	15	1 2	15	3	52-UV-LCP-0101	345	345	345
345	345	345	52-UV-LCP-0201	3	15	3 4	15	3	SPARE	345	345	345
0	0	0	SPARE	3	15	5 6	15	3	SPARE	345	345	345
0	0	0	SPARE	3	15	7 8	15	3	SPARE	0	0	0
0	0	0	SPARE	3	15	9 10	15	3	SPARE	0	0	0
0	0	0	SPARE	3	15	11 12	15	3	SPARE	0	0	0
0	0	0	SPARE	3	15	13 14	15	3	SPARE	0	0	0
0	0	0	SPARE	3	15	15 16	15	3	SPARE	0	0	0
0	0	0	SPARE	3	15	17 18	15	3	SPARE	0	0	0
0	0	0	SPARE	3	15	19 20	15	3	SPARE	0	0	0
0	0	0	SPARE	3	15	21 22	15	3	SPARE	0	0	0
0	0	0	SPARE	3	15	23 24	30	3	SPARE	0	0	0
0	0	0	SPARE	3	30	25 26	30	3	SPARE	0	0	0
0	0	0	SPARE	3	30	27 28	15	3	SPARE	0	0	0
690.7			TOTAL 'A'			1727			TOTAL 'A'	1036		
	691		TOTAL 'B'			1727			TOTAL 'B'		1036	
		691	TOTAL 'C'			1727			TOTAL 'C'			1036
			TOTAL			5181						

RO/UV BUILDING 50-ELEC-PP-0002
POWER PANELS SCHEDULE
NO SCALE

NOTES:

1. SEE DRAWINGS 00-E-001 AND 00-E-002 FOR ELECTRICAL LEGEND, ABBREVIATIONS AND NOTES.

60% SUBMITTAL- NOT FOR CONSTRUCTION

NO.	BY	CHK	APP	DATE	REVISIONS AND RECORD OF USE
B	JSL	MJK	EVB	7/30/2019	60% SUBMITTAL

BLACK & VEATCH
JOINT VENTURE
FILANC
BLACK & VEATCH

CITY OF MORRO BAY
MORRO BAY WRF
RECLAMATION FACILITY (WRF)

RO/UV BUILDING
ELECTRICAL
POWER PANELS SCHEDULE

DESIGNED: JSL
DETAILED: SBC
CHECKED:
APPROVED:
DATE:

0 1/2 1
IF THIS BAR DOES NOT MEASURE 1" THEN DRAWING IS NOT TO FULL SCALE

PROJECT NO.
400530

50-E-601
SHEET
OF

FB9000A
D400530
PLOTTED: 7/30/2019 1:55 AM FILE: C:\PWBatchPDF\Process\400530 - Morro Bay WRF\400530-50-E-601.dwg

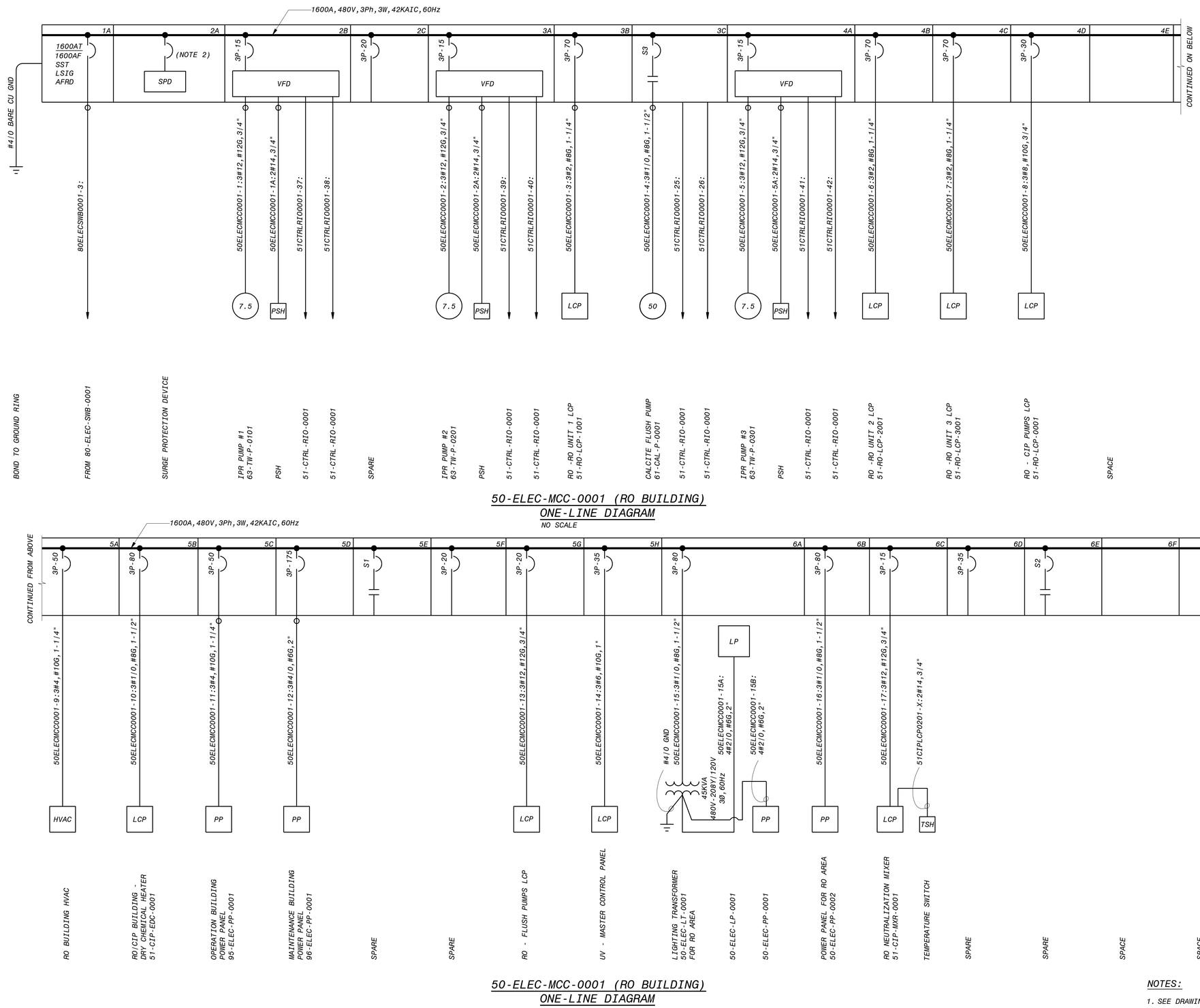

50-ELEC-MCC-0001 (RO BUILDING)
ONE-LINE DIAGRAM
NO SCALE

50-ELEC-MCC-0001 (RO BUILDING)
ONE-LINE DIAGRAM
NO SCALE

NOTES:

1. SEE DRAWINGS 00-E-001 AND 00-E-002 FOR ELECTRICAL LEGEND, ABBREVIATIONS AND NOTES.
2. CIRCUIT BREAKER SIZE SHALL BE RECOMMENDED BY MCC SUPPLIER.

60% SUBMITTAL- NOT FOR CONSTRUCTION

NO.	BY	CHK	APP	DATE	REVISIONS AND RECORD OF USE
B	JSL	MJK	EVB	7/30/2019	60% SUBMITTAL

BLACK & VEATCH
JOINT VENTURE
BLACK & VEATCH
FILANC

CITY OF MORRO BAY
MORRO BAY WRF
RECLAMATION FACILITY (WRF)

RO/UV BUILDING
ELECTRICAL
50-ELEC-MCC-0001 ONE-LINE DIAGRAM

DESIGNED: JSL
DETAILED: SBC
CHECKED:
APPROVED:
DATE:

0 1/2 1
IF THIS BAR DOES NOT MEASURE 1" THEN DRAWING IS NOT TO FULL SCALE

PROJECT NO.
400530

50-E-701
SHEET
1 OF 2

FB0000A
D400530
PLOTTED: 7/30/2019 8:31 AM FILE: C:\PWBatchPDF\Process\400530 - Morro Bay WRF\400530-50-E-701.dwg

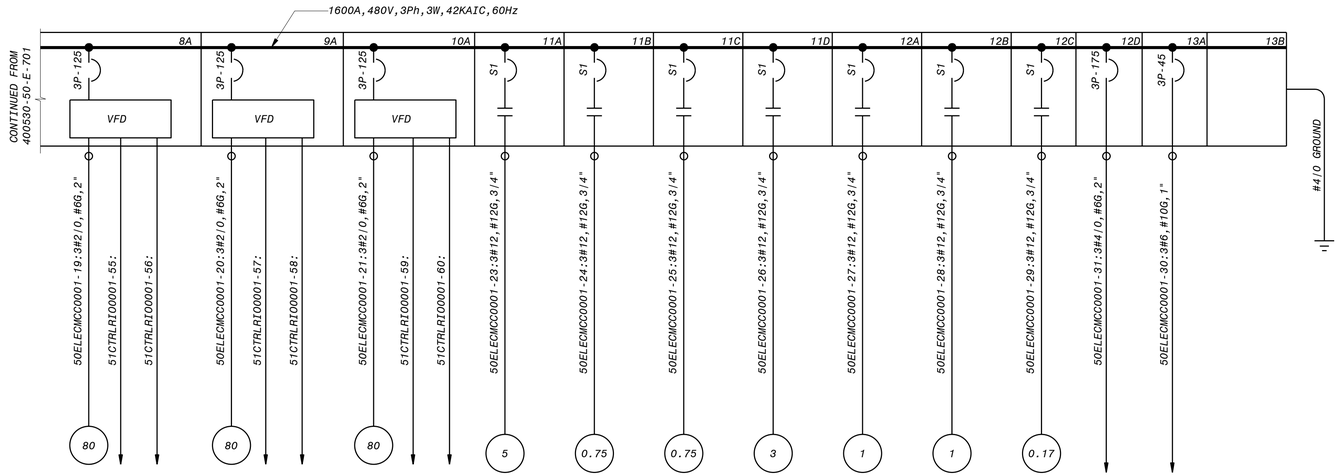

50-ELEC-MCC-0001 (RO BUILDING)
ONE-LINE DIAGRAM
NO SCALE

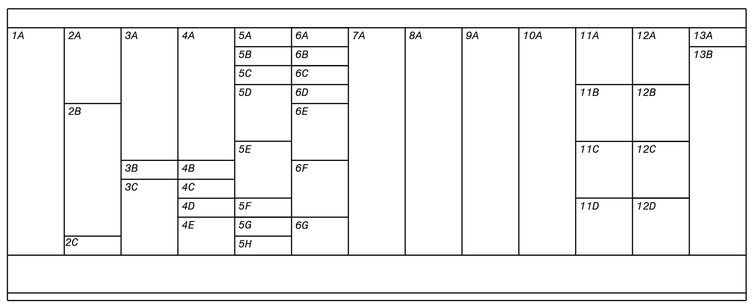

50-ELEC-MCC-0001 (RO BUILDING)
FRONT ELEVATION
NO SCALE

NOTES:

1. SEE DRAWINGS 00-E-001 AND 00-E-002 FOR ELECTRICAL LEGEND, ABBREVIATIONS AND NOTES.
2. CIRCUIT BREAKER SIZE SHALL BE RECOMMENDED BY MCC SUPPLIER.

60% SUBMITTAL- NOT FOR CONSTRUCTION

NO.	BY	CHK	APP	DATE	REVISIONS AND RECORD OF USE
B	JSL	MJK	EVB	7/30/2019	60% SUBMITTAL

BLACK & VEATCH
JOINT VENTURE
FILANC
BLACK & VEATCH

CITY OF MORRO BAY
MORRO BAY WRF
RECLAMATION FACILITY (WRF)

RO/UV BUILDING
ELECTRICAL
50-ELEC-MCC-0001 ONE-LINE DIAGRAM

DESIGNED: JSL
DETAILED: SBC
CHECKED:
APPROVED:
DATE:

0 1/2 1
IF THIS BAR DOES NOT MEASURE 1" THEN DRAWING IS NOT TO FULL SCALE

PROJECT NO.
400530

50-E-702
SHEET
2 OF 2

FD9000A
D400330
PLOTTED: 7/30/2019 8:32 AM FILE: C:\PWBatchPDF\Process\400530 - Morro Bay WRF\400530-50-E-702.dwg

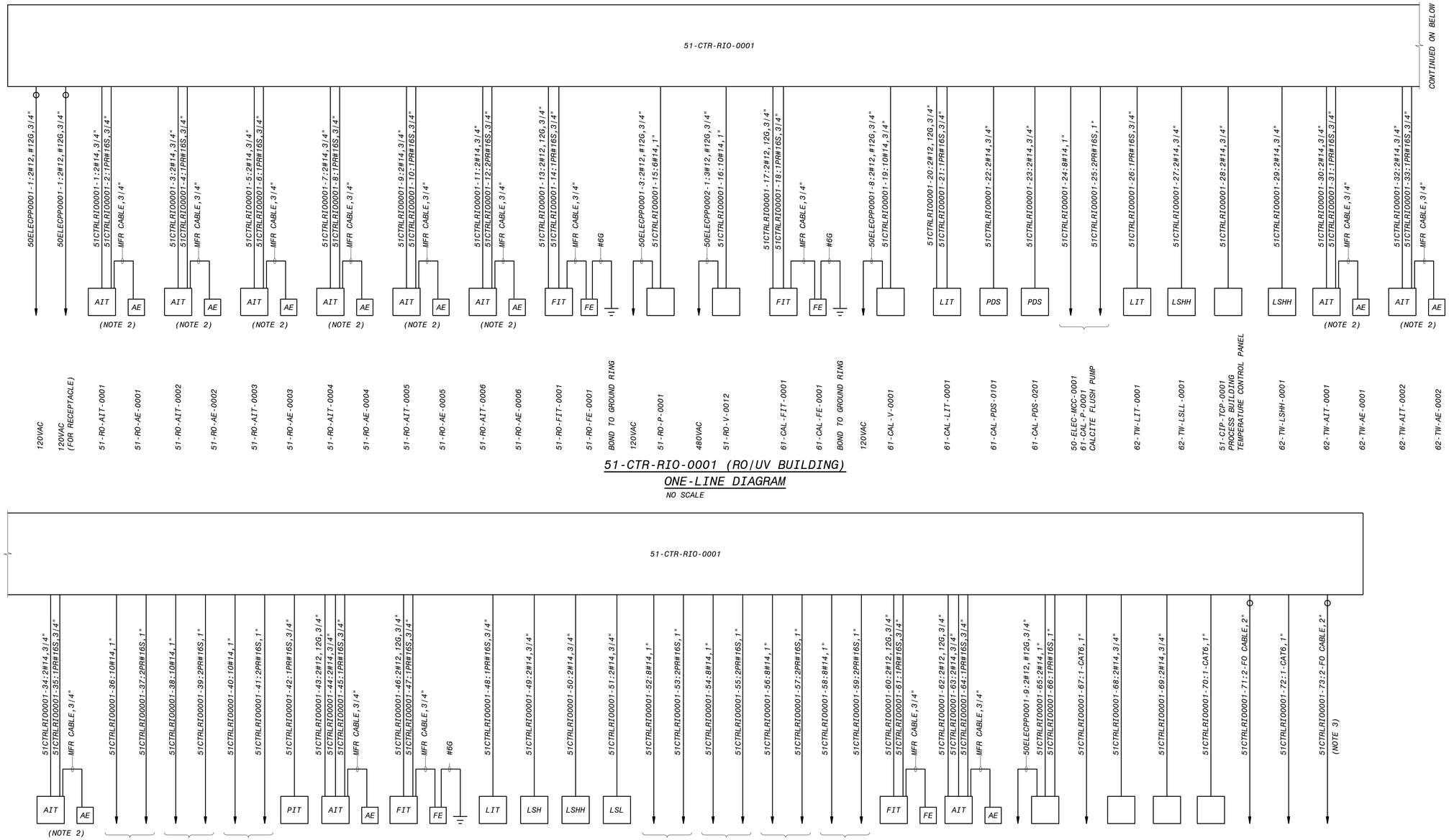

51-CTR-RIO-0001 (RO/UV BUILDING)
ONE-LINE DIAGRAM
NO SCALE

51-CTR-RIO-0001 (RO/UV BUILDING)
ONE-LINE DIAGRAM
NO SCALE

NOTES:

1. SEE DRAWINGS 00-E-001 AND 00-E-002 FOR ELECTRICAL LEGEND, ABBREVIATIONS AND NOTES.
2. POWER SUPPLY TO THE ANALYSERS SHALL BE DERIVED FROM ANALYSER PANEL.
3. SEE 00-I-701 FOR FIBER OPTIC CABLE REQUIREMENT.

60% SUBMITTAL- NOT FOR CONSTRUCTION

NO.	BY	CHK	APP	DATE
B	JSL	MJK	EVB	7/30/2019

REVISIONS AND RECORD OF USE — 60% SUBMITTAL

BLACK & VEATCH

JOINT VENTURE

FILANC

BLACK & VEATCH

CITY OF MORRO BAY
MORRO BAY WRF
RECLAMATION FACILITY (WRF)

RO/UV BUILDING
ELECTRICAL
51-CTR-RIO-0001 ONE-LINE DIAGRAM

DESIGNED: JSL
DETAILED: SBC
CHECKED:
APPROVED:
DATE:

0 1/2 1
IF THIS BAR DOES NOT MEASURE 1" THEN DRAWING IS NOT TO FULL SCALE

PROJECT NO.
400530

50-E-711
SHEET
OF

FB0000A
D400530
PLOTTED: 7/30/2019 8:32 AM FILE: C:\PWBatchPDF\Process\400530 - Morro Bay WRF\400530-50-E-711.dwg

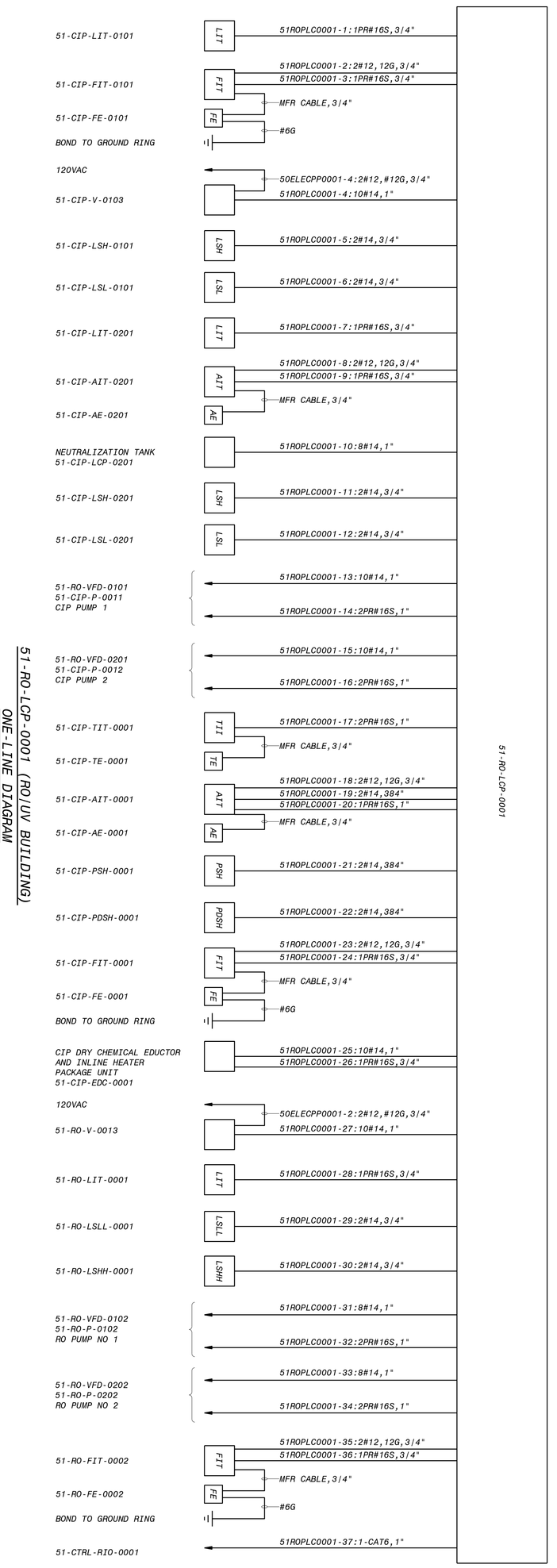

51-RO-LCP-0001 (RO/UV BUILDING)
ONE-LINE DIAGRAM
NO SCALE

60% SUBMITTAL - NOT FOR CONSTRUCTION

NOTES:
1. SEE DRAWINGS 00-E-001 AND 00-E-002 FOR ELECTRICAL LEGEND, ABBREVIATIONS AND NOTES.

DESIGNED: JSL	
DETAILED: SBC	
CHECKED:	
APPROVED:	
DATE:	

0 1/2 1
IF THIS BAR DOES NOT MEASURE 1" THEN DRAWING IS NOT FULL SCALE

PROJECT NO.
400530

SHEET
50-E-712
OF

CITY OF MORRO BAY
MORRO BAY WRF
RECLAMATION FACILITY (WRF)

RO/UV BUILDING
ELECTRICAL
51-RO-LCP-0001 ONE-LINE DIAGRAM

BLACK & VEATCH
JOINT VENTURE
FILANC BLACK & VEATCH

DATE	REVISIONS AND RECORD OF USE	NO.	BY	CHK	APP
7/30/2019	60% SUBMITTAL	B	JSL	MJK	EVB

#4/0 GND TO METAL UNDERGROUND WATER PIPING

#4/0 GND RING (TYP)

#4/0 GND TO BUILDING STEEL

GROUND ROD

RO FEED PUMP (TYP OF 3)

RO FEED CARTRIDGE FILTER (TYP OF 3)

AE/AIT-0001
AE/AIT-0002
AE/AIT-0003
AE/AIT-0004
AE/AIT-0005
AE/AIT-0006

RO-P-0001

RO-V-012

HOLD

51-RO-LCP-3001

51-RO-LCP-2001

51-RO-LCP101

RO-FIT-0001

RO-FE-0001

#4/0 GND TO METAL UNDERGROUND WATER PIPING

#4/0 GND TO FOUNDATION REINFORCING

#6 GND TO FE

SEE SHEET 52-E-101 FOR CONTINUATION

SEE SHEET 51-E-102 FOR CONTINUATION

NOTES:

1. SEE DRAWING 00-E-001 AND 00-E-002 FOR ELECTRICAL LEGENDS, ABBREVIATIONS AND NOTES.
2. SEE DRAWING 10-E-100 FOR OVERALL ELECTRICAL SITE PLAN.

RO/UV BUILDING - RO SYSTEM POWER AND GROUNDING PLAN

1/2" = 1'-0"

12' 6' 0' 1' 2' 3' 4' 5'

1/2" = 1'-0"

60% SUBMITTAL - NOT FOR CONSTRUCTION

NO.	BY	CHK	APP	DATE	REVISIONS AND RECORD OF USE
B	JSL	MJK	EVB	7/30/2019	60% SUBMITTAL

BLACK & VEATCH JOINT VENTURE

BLACK & VEATCH

FILANC

CITY OF MORRO BAY
MORRO BAY WRF
RECLAMATION FACILITY (WRF)

RO/UV BUILDING - RO SYSTEM ELECTRICAL
POWER AND GROUNDING PLAN

DESIGNED: JSL
DETAILED: SBC
CHECKED:
APPROVED:
DATE:

0 1/2 1

IF THIS BAR DOES NOT MEASURE 1" THEN DRAWING IS NOT TO FULL SCALE

PROJECT NO.
400530

51-E-101
SHEET
OF

PLOTTED: 30-07-2019 17:07:35
D400530

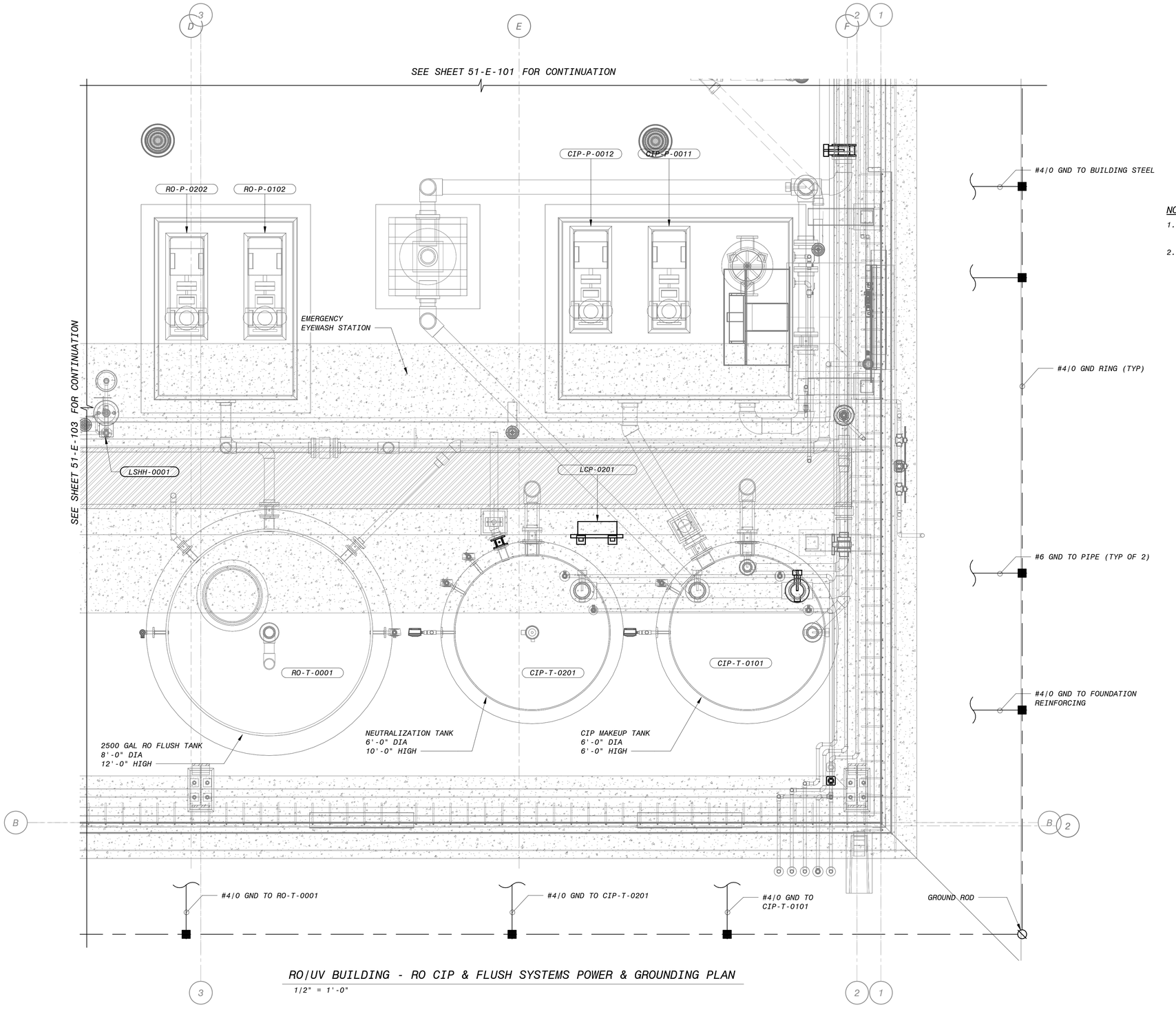

RO/UV BUILDING - RO CIP & FLUSH SYSTEMS POWER & GROUNDING PLAN

1/2" = 1'-0"

12' 6' 0' 1' 2' 3' 4' 5'

1/2" = 1'-0"

NOTES:

1. SEE DRAWING 00-E-001 AND 00-E-002 FOR ELECTRICAL LEGENDS, ABBREVIATIONS AND NOTES.
2. SEE DRAWING 10-E-100 FOR OVERALL ELECTRICAL SITE PLAN.

NO.	BY	CHK	APP'D	DATE	REVISIONS AND RECORD OF USE
B	JSL	MJK	EVB	7/30/2019	60% SUBMITTAL

BLACK & VEATCH

JOINT VENTURE

FILANC

BLACK & VEATCH

CITY OF MORRO BAY
MORRO BAY WRF
RECLAMATION FACILITY (WRF)

RO CIP & FLUSH SYSTEMS
ELECTRICAL
POWER AND GROUNDING PLAN

DESIGNED: JSL
DETAILED: SBC
CHECKED:
APPROVED:
DATE:

0 1/2 1

IF THIS BAR DOES NOT MEASURE 1" THEN DRAWING IS NOT TO FULL SCALE

PROJECT NO.
400530

51-E-102
SHEET
OF

60% SUBMITTAL - NOT FOR CONSTRUCTION

PLOTTED: 30-07-2019 17:07:37
D400530

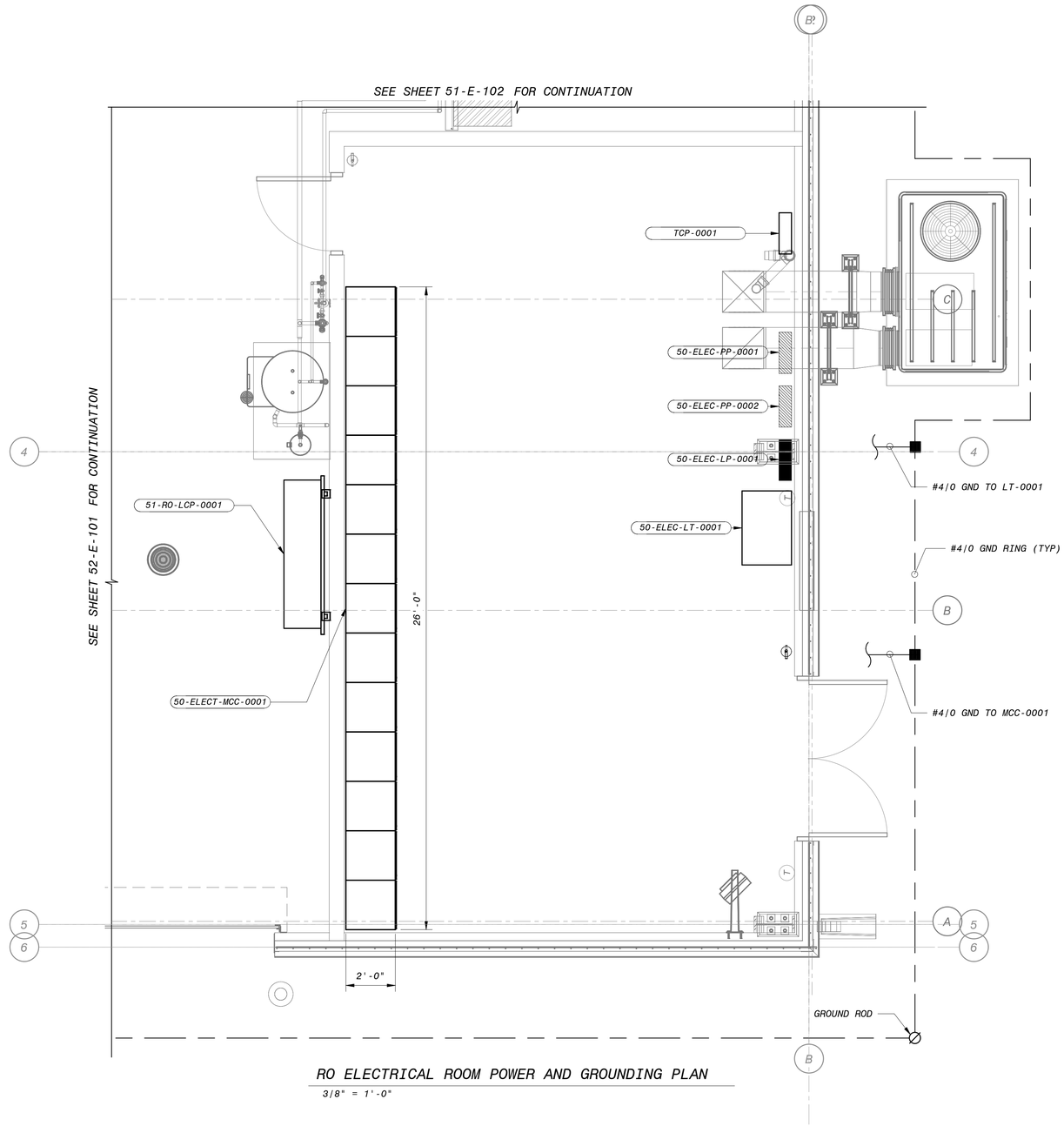

RO ELECTRICAL ROOM POWER AND GROUNDING PLAN

3/8" = 1'-0"

NOTES:

1. SEE DRAWING 00-E-001 AND 00-E-002 FOR ELECTRICAL LEGENDS, ABBREVIATIONS AND NOTES.
2. SEE DRAWING 10-E-100 FOR OVERALL ELECTRICAL SITE PLAN.

NO.	BY	CHK	APP	DATE	REVISIONS AND RECORD OF USE
B	JSL	MJK	EVB	7/30/2019	60% SUBMITTAL

BLACK & VEATCH JOINT VENTURE

BLACK & VEATCH

FILANC

CITY OF MORRO BAY
MORRO BAY WRF
RECLAMATION FACILITY (WRF)

RO ELECTRICAL ROOM
ELECTRICAL
POWER AND GROUNDING PLAN

DESIGNED: JSL
DETAILED: SBC
CHECKED:
APPROVED:
DATE:

0 1/2 1
IF THIS BAR DOES NOT MEASURE 1" THEN DRAWING IS NOT TO FULL SCALE

PROJECT NO.
400530

51-E-103
SHEET
OF

12" 0' 1' 2' 3' 4' 5' 6' 7'
3/8" = 1'-0"

60% SUBMITTAL - NOT FOR CONSTRUCTION

PLOTTED: 30-07-2019 17:07:38
D400530

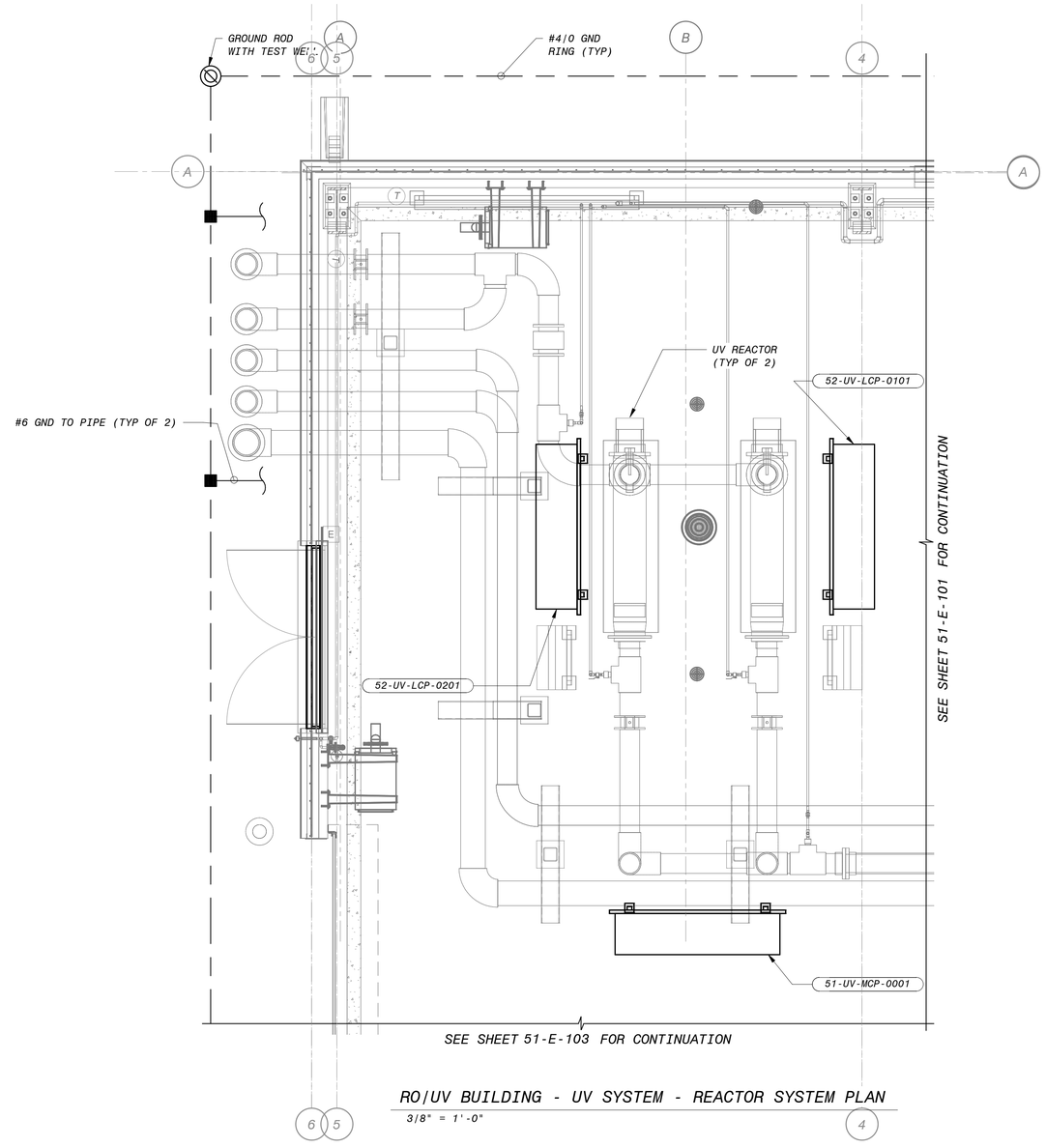

RO/UV BUILDING - UV SYSTEM - REACTOR SYSTEM PLAN

3/8" = 1'-0"

NOTES:

1. SEE DRAWING 00-E-001 AND 00-E-002 FOR ELECTRICAL LEGENDS, ABBREVIATIONS AND NOTES.
2. SEE DRAWING 10-E-100 FOR OVERALL ELECTRICAL SITE PLAN.

NO.	BY	CHK	APP	DATE	REVISIONS AND RECORD OF USE
B	JSL	MJK	EVB	7/30/2019	60% SUBMITTAL

BLACK & VEATCH

JOINT VENTURE

FILANC

BLACK & VEATCH

CITY OF MORRO BAY
MORRO BAY WRF
RECLAMATION FACILITY (WRF)

RO/UV BUILDING - UV SYSTEM
ELECTRICAL
POWER AND GROUNDING PLAN

DESIGNED: JSL
DETAILED: SBC
CHECKED:
APPROVED:
DATE:

0 1/2 1

IF THIS BAR DOES NOT MEASURE 1" THEN DRAWING IS NOT TO FULL SCALE

PROJECT NO.
400530

52-E-101
SHEET
OF

12" 0' 1' 2' 3' 4' 5' 6' 7'

3/8" = 1'-0"

60% SUBMITTAL - NOT FOR CONSTRUCTION

PLOTTED: 30-07-2019 17:07:39
D400530

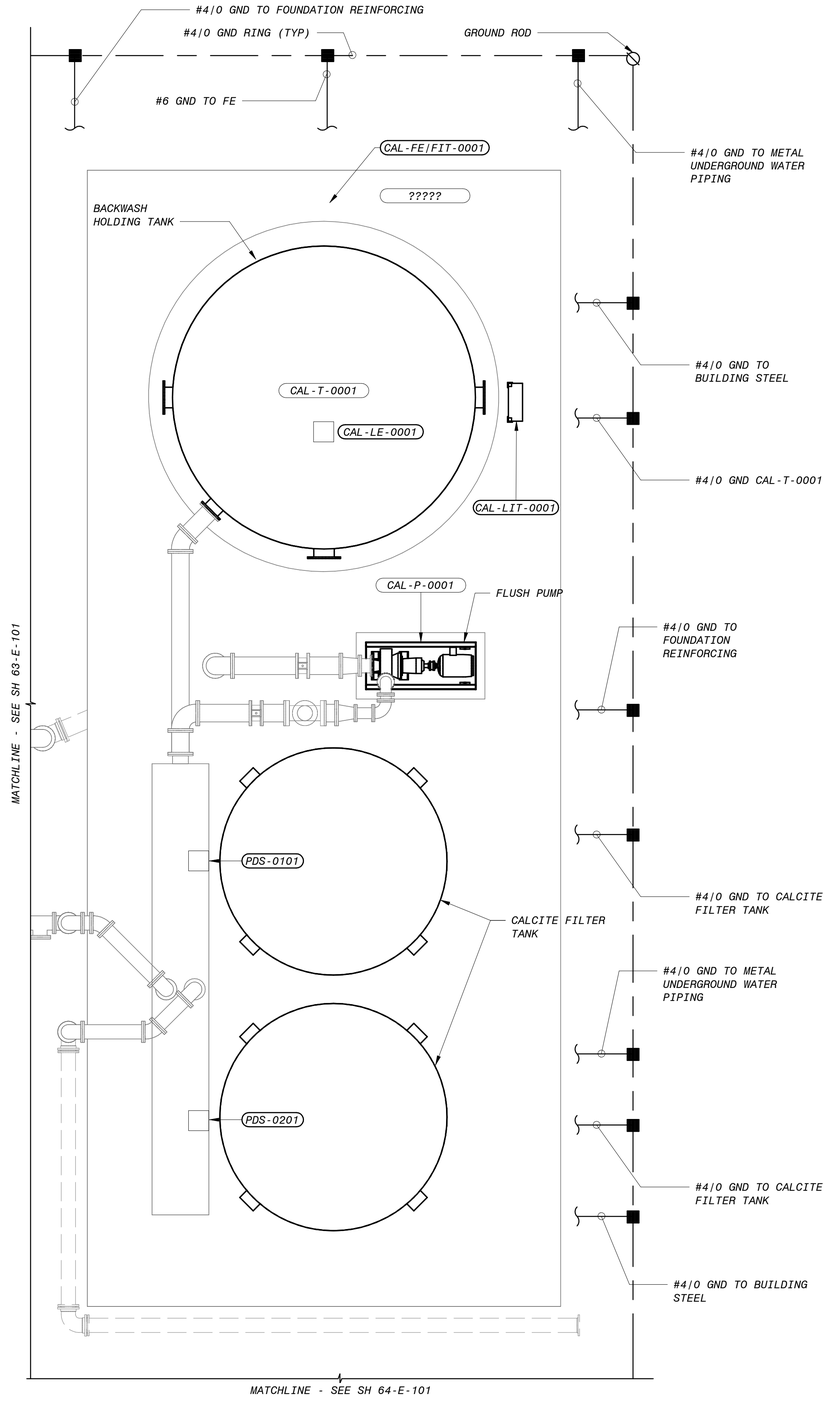

PRODUCT WATER AREA - CALCITE CONTACTOR POWER AND GROUNDING PLAN

1/4" = 1'-0"

NOTES:

1. SEE DRAWING 00-E-001 AND 00-E-002 FOR ELECTRICAL LEGENDS, ABBREVIATIONS AND NOTES.
2. SEE DRAWING 10-E-100 FOR OVERALL ELECTRICAL SITE PLAN.

NO.	BY	CHK	APP	DATE	REVISIONS AND RECORD OF USE
B	JSL	MJK	EVB	7/30/2019	60% SUBMITTAL

BLACK & VEATCH

JOINT VENTURE

FILANC

BLACK & VEATCH

CITY OF MORRO BAY
MORRO BAY WATER
RECLAMATION FACILITY (WRF)

PRODUCT WATER AREA - CALCITE CONTACTOR
ELECTRICAL
POWER AND GROUNDING PLAN

DESIGNED: JSL
DETAILED: SBC
CHECKED:
APPROVED:
DATE:

0 1/2 1
IF THIS BAR DOES NOT MEASURE 1" THEN DRAWING IS NOT TO FULL SCALE

PROJECT NO.
400530

61-E-101
SHEET
OF

60% SUBMITTAL- NOT FOR CONSTRUCTION

PLOTTED: 30-07-2019 17:15:45
D400530

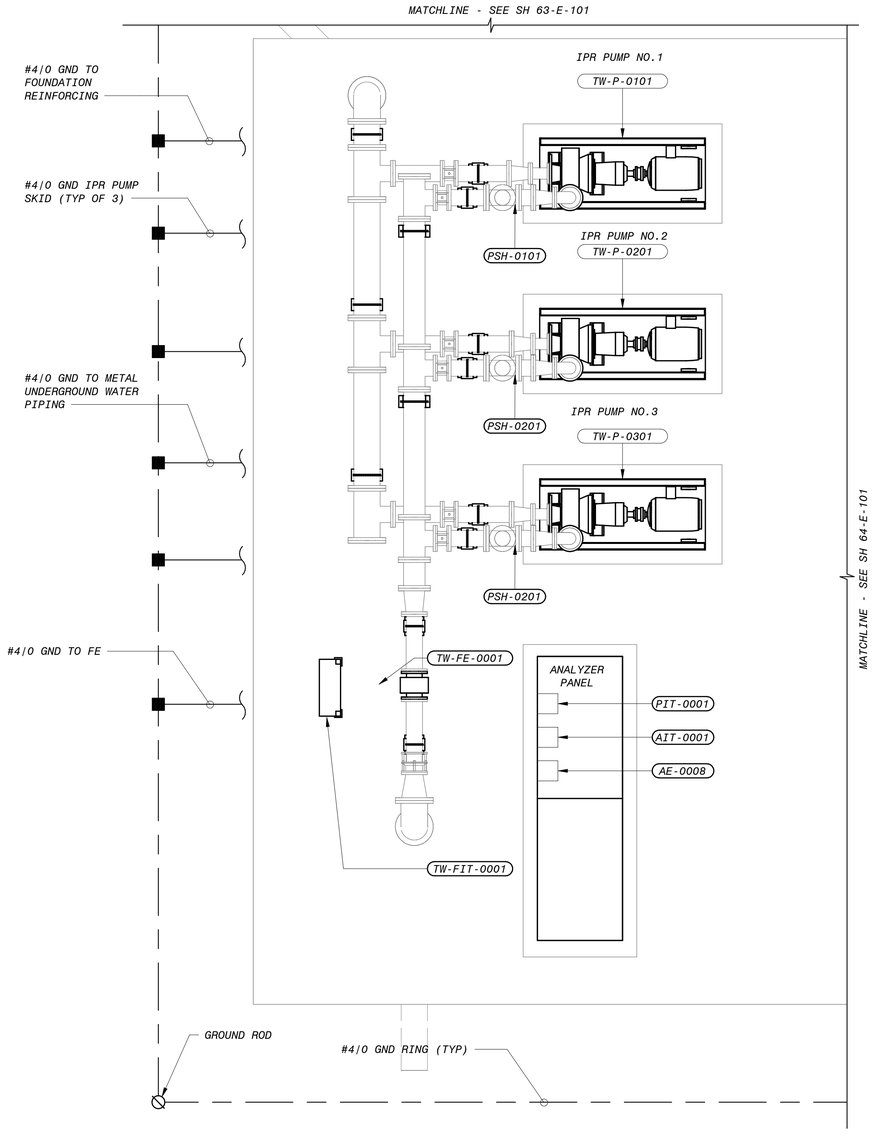

PRODUCT WATER AREA - IPR PRODUCT WATER PUMP STATION POWER AND GROUNDING PLAN

3/8" = 1'-0"

NOTES:

1. SEE DRAWING 00-E-001 AND 00-E-002 FOR ELECTRICAL LEGENDS, ABBREVIATIONS AND NOTES.
2. SEE DRAWING 10-E-100 FOR OVERALL ELECTRICAL SITE PLAN.

NO.	BY	CHK	APP	DATE	REVISIONS AND RECORD OF USE
B	JSL	MJK	EVB	7/30/2019	60% SUBMITTAL

BLACK & VEATCH

JOINT VENTURE

FILANC

BLACK & VEATCH

CITY OF MORRO BAY
MORRO BAY WATER
RECLAMATION FACILITY (WRF)

PRODUCT WATER AREA
IPR PRODUCT WATER PUMP STATION
ELECTRICAL
POWER AND GROUNDING PLAN

DESIGNED: JSL
DETAILED: SBC
CHECKED:
APPROVED:
DATE:

0 1/2 1
IF THIS BAR DOES NOT MEASURE 1" THEN DRAWING IS NOT TO FULL SCALE

PROJECT NO.
400530

62-E-101
SHEET
OF

60% SUBMITTAL- NOT FOR CONSTRUCTION

PLOTTED: 30-07-2019 17:15:45
D400530

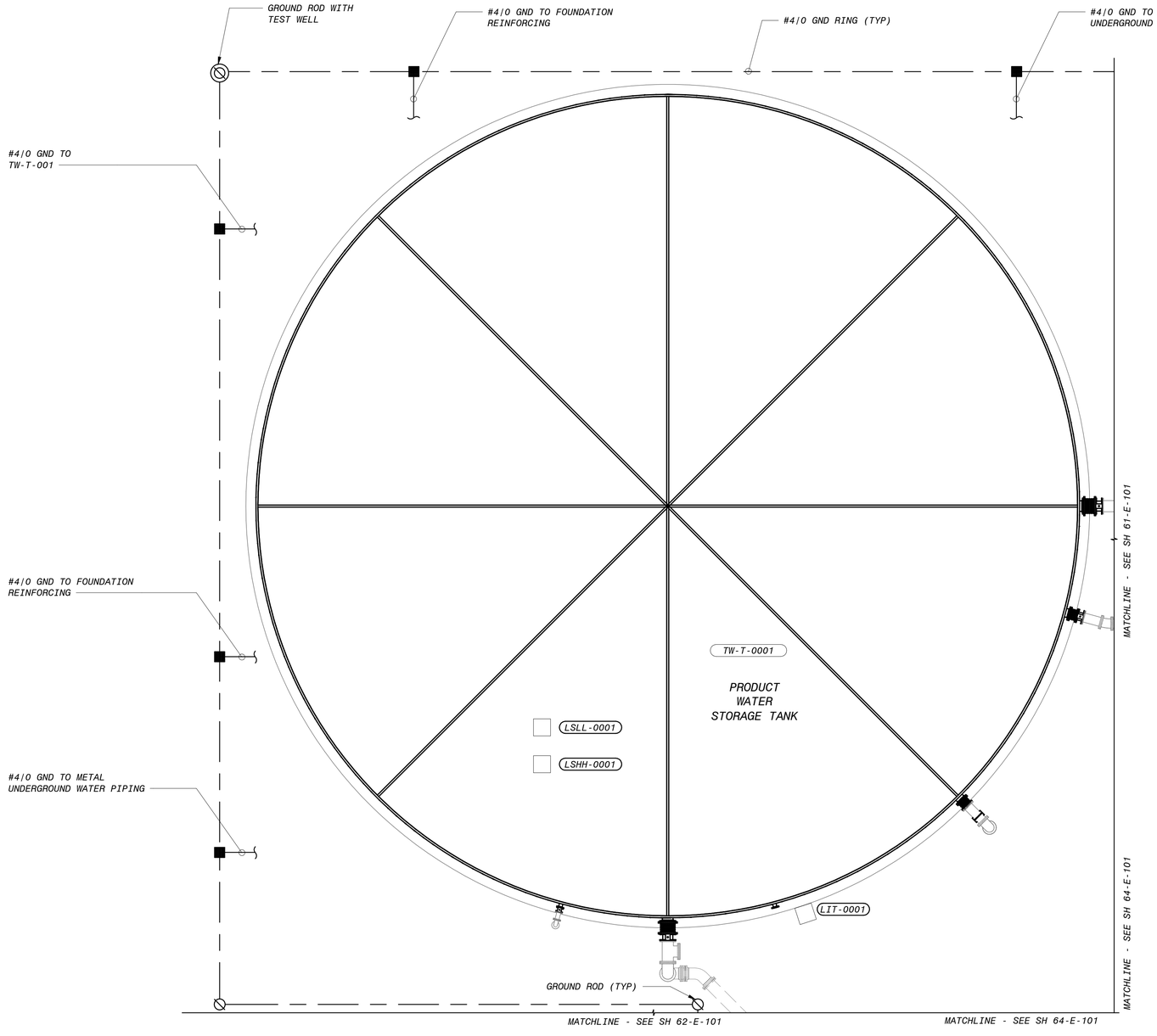

PRODUCT WATER AREA - PRODUCT WATER STORAGE TANK POWER AND GROUNDING PLAN

3/16" = 1'-0"

NOTES:

1. SEE DRAWING 00-E-001 AND 00-E-002 FOR ELECTRICAL LEGENDS, ABBREVIATIONS AND NOTES.
2. SEE DRAWING 10-E-100 FOR OVERALL ELECTRICAL SITE PLAN.

NO.	BY	CHK	APP	DATE	REVISIONS AND RECORD OF USE
B	JSL	MJK	EVB	7/30/2019	60% SUBMITTAL

BLACK & VEATCH

JOINT VENTURE

FILANC

BLACK & VEATCH

CITY OF MORRO BAY
MORRO BAY WATER RECLAMATION FACILITY (WRF)

PRODUCT WATER AREA
PRODUCT WATER STORAGE TANK ELECTRICAL
POWER AND GROUNDING PLAN

DESIGNED: JSL
DETAILED: SBC
CHECKED:
APPROVED:
DATE:

0 1/2 1

IF THIS BAR DOES NOT MEASURE 1" THEN DRAWING IS NOT TO FULL SCALE

PROJECT NO. 400530

63-E-101
SHEET
OF

60% SUBMITTAL- NOT FOR CONSTRUCTION

PLOTTED: 30-07-2019 17:15:47
D400530

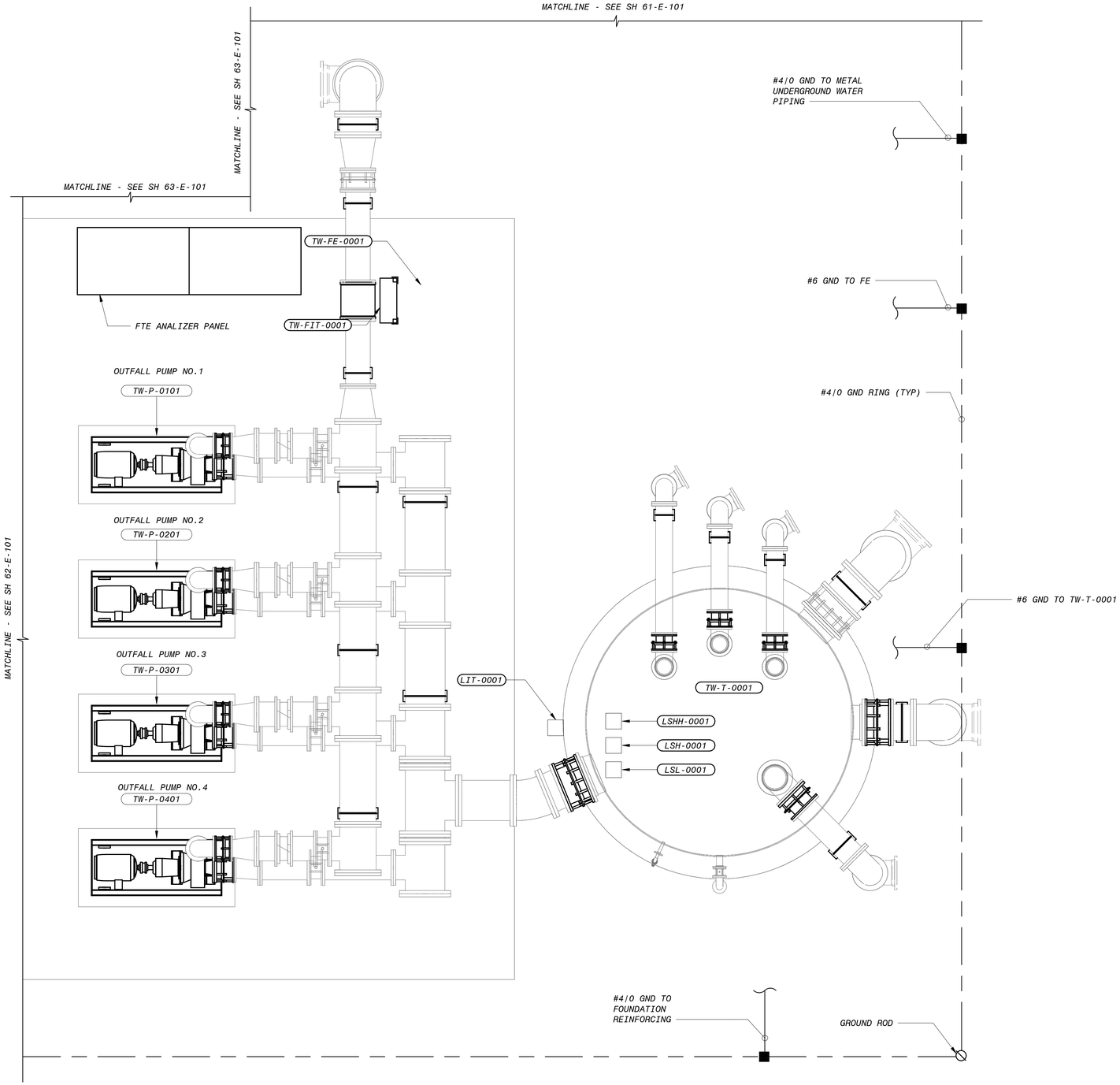

PRODUCT WATER AREA - OUTFALL PUMP STATION POWER AND GROUNDING PLAN

3/8" = 1'-0"

NOTES:

1. *SEE DRAWING 00-E-001 AND 00-E-002 FOR ELECTRICAL LEGENDS, ABBREVIATIONS AND NOTES.*
2. *SEE DRAWING 10-E-100 FOR OVERALL ELECTRICAL SITE PLAN.*

NO.	BY	CHK	APP	DATE	REVISIONS AND RECORD OF USE
B	JSL	MJK	EVB	7/30/2019	60% SUBMITTAL

BLACK & VEATCH

JOINT VENTURE

FILANC

BLACK & VEATCH

CITY OF MORRO BAY
MORRO BAY WATER RECLAMATION FACILITY (WRF)

PRODUCT WATER AREA - OUTFALL PUMP STATION ELECTRICAL POWER AND GROUNDING PLAN

DESIGNED:	JSL
DETAILED:	SBC
CHECKED:	
APPROVED:	
DATE:	

0 1/2 1

IF THIS BAR DOES NOT MEASURE 1" THEN DRAWING IS NOT TO FULL SCALE

PROJECT NO. 400530

64-E-101

SHEET OF

60% SUBMITTAL- NOT FOR CONSTRUCTION

PLOTTED: 30-07-2019 17:15:48

D400530

#4/0 GND TO FOUNDATION REINFORCING

#4/0 GND TO METAL UNDERGROUND WATER PIPING (TYP OF 2)

#4/0 GND TO FE

#4/0 GND TO AIR BL-0101

GROUND ROD (TYP OF 2)

SLUDGE HOLDING TANK BLOWER NO.1

AIR-BL-0101

71-AIR-LCP-0101

71-AIR-PIT-0102

71-AIR-PIT-0202

XXX-LIT-0001

XXX-LSHH-0001

XXX-LE-0001

XXX-LE-0001

SAFE SETTLE TANK

SLUDGE HOLDING TANK NO.1

SLUDGE HOLDING TANK NO.2

SLUDGE HOLDING TANK BLOWER NO.2

71-AIR-LCP-0201

AIR-BL-0201

#4/0 GND TO AIR BL-0201

WAS-LIT-0101

WAS-AIT-0101

WAS-AE-0101

WAS-LE-0101

WAS-MXR-0101

WAS-LIT-0201

WAS-AIT-0201

WAS-AE-0201

WAS-LE-0201

WAS-MXR-0002

MATCHLINE - SEE SH 72-E-101

RESIDUALS AREA - SLUDGE HOLDING TANKS & SAFE SETTLE TANK AREA POWER AND GROUNDING PLAN

1/4" = 1'-0"

NOTES:

1. SEE DRAWING 00-E-001 AND 00-E-002 FOR ELECTRICAL LEGENDS, ABBREVIATIONS AND NOTES.
2. SEE DRAWING 10-E-100 FOR OVERALL ELECTRICAL SITE PLAN.

4' 2' 0' 4' 8'

1/4" = 1'-0"

60% SUBMITTAL - NOT FOR CONSTRUCTION

NO.	BY	CHK	APP	DATE	REVISIONS AND RECORD OF USE
B	JSL	MJK	EVB	7/30/2019	60% SUBMITTAL

BLACK & VEATCH JOINT VENTURE

BLACK & VEATCH

FILANC

CITY OF MORRO BAY
MORRO BAY WRF
RECLAMATION FACILITY (WRF)

RESIDUALS AREA - SLUDGE HOLDING TANKS AND SAFE SETTLE TANK AREA ELECTRICAL POWER AND GROUNDING PLAN

DESIGNED: JSL
DETAILED: SBC
CHECKED:
APPROVED:
DATE:

0 1/2 1

IF THIS BAR DOES NOT MEASURE 1" THEN DRAWING IS NOT TO FULL SCALE

PROJECT NO. 400530

71-E-101

SHEET OF

PLOTTED: 30-07-2019 17:29:13

D400530

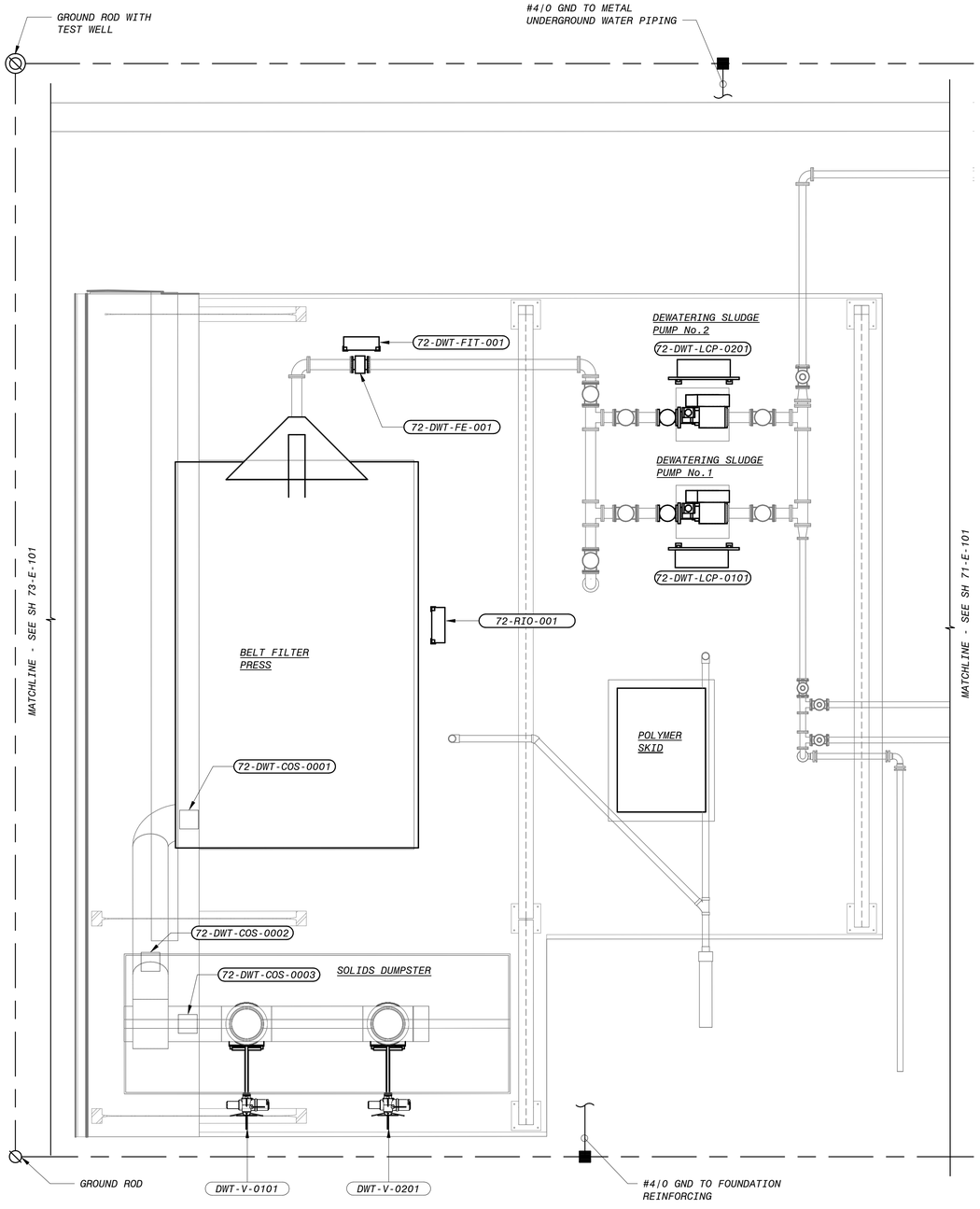

RESIDUALS AREA - DEWATERING FACILITY POWER AND GROUNDING PLAN

1/4" = 1'-0"

NOTES:

1. SEE DRAWING 00-E-001 AND 00-E-002 FOR ELECTRICAL LEGENDS, ABBREVIATIONS AND NOTES.
2. SEE DRAWING 10-E-100 FOR OVERALL ELECTRICAL SITE PLAN.

NO.	BY	CHK	APP	DATE	REVISIONS AND RECORD OF USE
B	JSL	MJK	EVB	7/30/2019	60% SUBMITTAL

BLACK & VEATCH

JOINT VENTURE

FILANC

BLACK & VEATCH

CITY OF MORRO BAY
MORRO BAY WRF
RECLAMATION FACILITY (WRF)

RESIDUALS AREA - DEWATERING FACILITY
ELECTRICAL
POWER AND GROUNDING PLAN

DESIGNED: JSL
DETAILED: SBC
CHECKED:
APPROVED:
DATE:

0 1/2 1
IF THIS BAR DOES NOT MEASURE 1" THEN DRAWING IS NOT TO FULL SCALE

PROJECT NO.
400530

72-E-101
SHEET
OF

4' 2' 0' 4' 8'
1/4" = 1'-0"

60% SUBMITTAL- NOT FOR CONSTRUCTION

PLOTTED: 30-07-2019 17:29:14
D400530

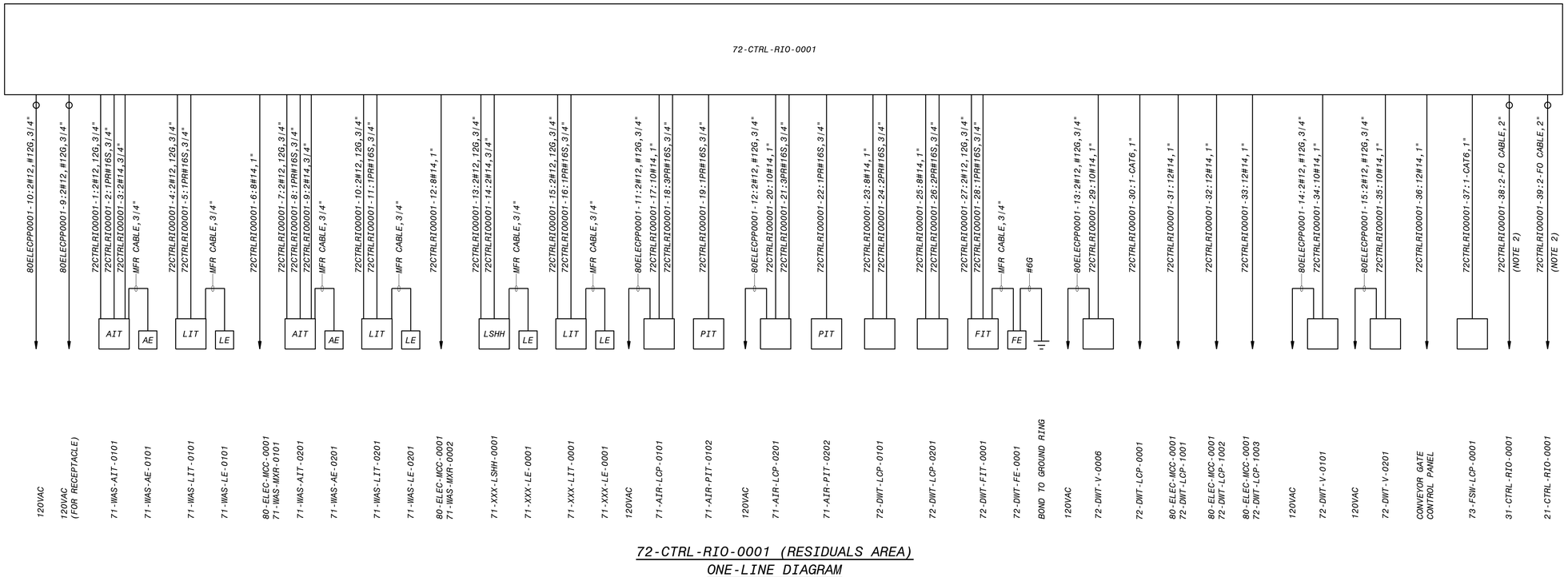

72-CTRL-RIO-0001 (RESIDUALS AREA) ONE-LINE DIAGRAM

NO SCALE

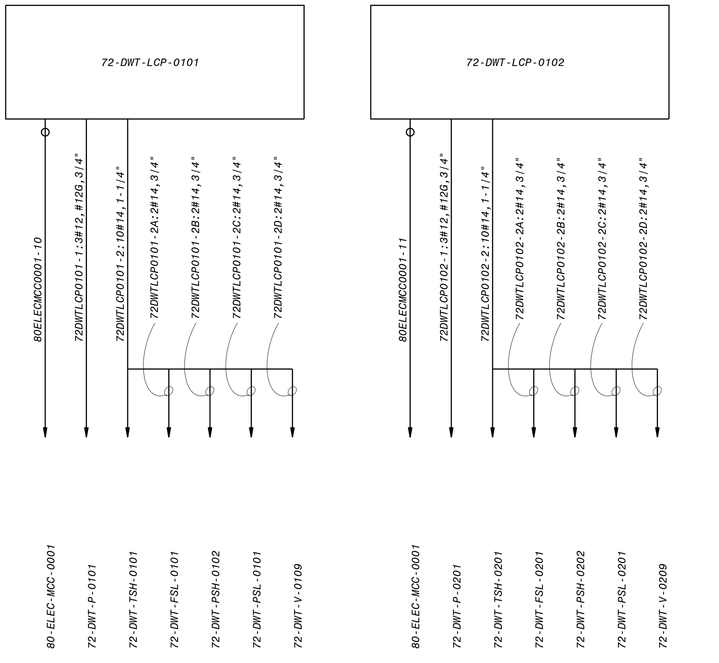

72-DWT-LCP-0101 (RESIDUALS AREA) ONE-LINE DIAGRAM

NO SCALE

72-DWT-LCP-0201 (RESIDUALS AREA) ONE-LINE DIAGRAM

NO SCALE

NOTES:

1. SEE DRAWINGS 00-E-001 AND 00-E-002 FOR ELECTRICAL LEGEND, ABBREVIATIONS AND NOTES.
2. SEE DRAWING 00-T-701 FOR FIBRE OPTIC CABLE REQUIREMENT.

60% SUBMITTAL- NOT FOR CONSTRUCTION

NO.	BY	CHK	APP	DATE	REVISIONS AND RECORD OF USE
B	JSL	MJK	EVB	7/30/2019	60% SUBMITTAL

BLACK & VEATCH

JOINT VENTURE

FILANC

BLACK & VEATCH

CITY OF MORRO BAY
MORRO BAY WRF
RECLAMATION FACILITY (WRF)

RESIDUALS AREA
ELECTRICAL
72-CTRL-RIO-0001 ONE-LINE DIAGRAM

DESIGNED: JSL
DETAILED: SBC
CHECKED:
APPROVED:
DATE:

0 1/2 1
IF THIS BAR DOES NOT MEASURE 1" THEN DRAWING IS NOT TO FULL SCALE

PROJECT NO.
400530

72-E-701
SHEET
OF

FB0000A
D400530
PLOTTED: 7/30/2019 8:33 AM FILE: C:\PWBatchPDF\Process\400530 - Morro Bay WRF\400530-72-E-701.dwg

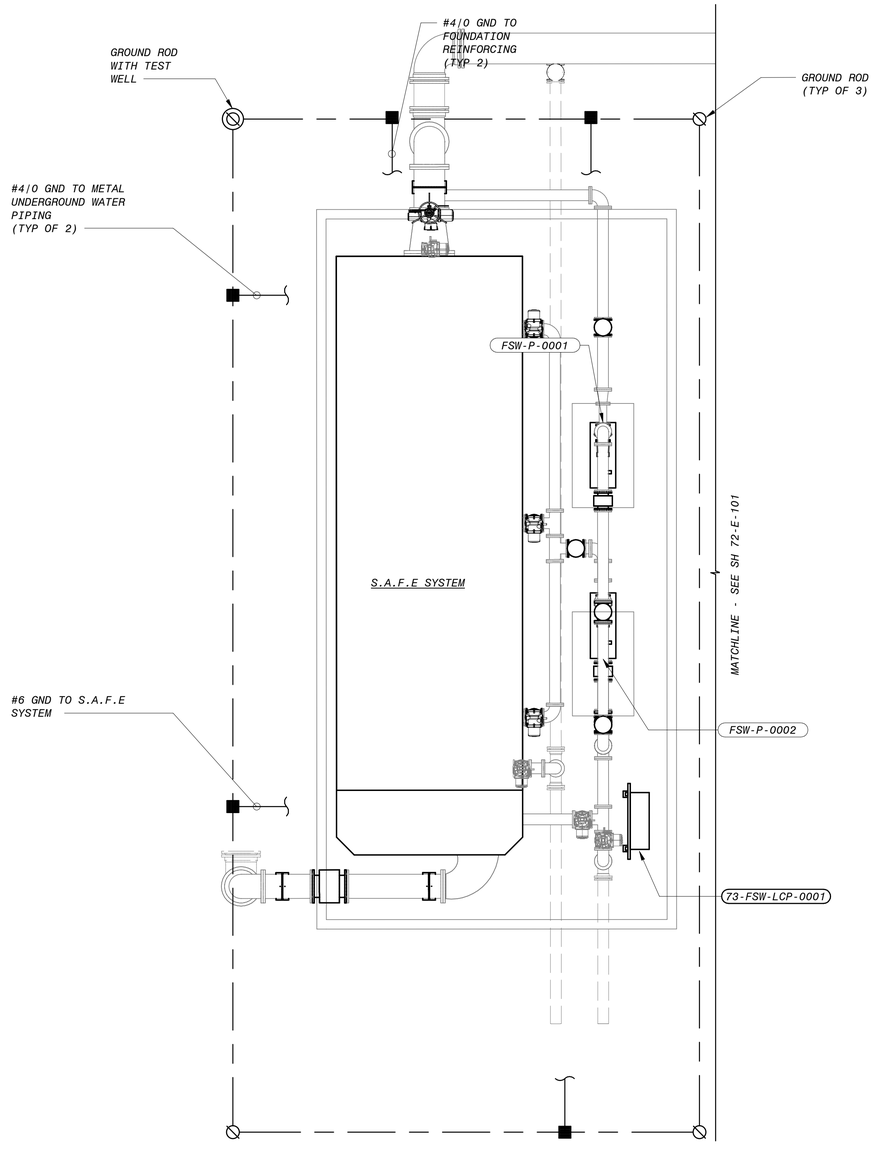

RESIDUALS AREA - SAFE FILTER POWER AND GROUNDING PLAN

1/4" = 1'-0"

NOTES:

1. SEE DRAWING 00-E-001 AND 00-E-002 FOR ELECTRICAL LEGENDS, ABBREVIATIONS AND NOTES.
2. SEE DRAWING 10-E-100 FOR OVERALL ELECTRICAL SITE PLAN.

4' 2' 0' 4' 8'

1/4" = 1'-0"

60% SUBMITTAL- NOT FOR CONSTRUCTION

NO.	BY	CHK	APP'D	DATE	REVISIONS AND RECORD OF USE
B	JSL	MJK	EVB	7/30/2019	60% SUBMITTAL

BLACK & VEATCH

JOINT VENTURE

FILANC

CITY OF MORRO BAY
MORRO BAY WRF
RECLAMATION FACILITY (WRF)

RESIDUALS AREA - SAFE FILTER SYSTEM
ELECTRICAL
POWER AND GROUNDING PLAN

DESIGNED: JSL
DETAILED: SBC
CHECKED:
APPROVED:
DATE:

0 1/2 1

IF THIS BAR DOES NOT MEASURE 1" THEN DRAWING IS NOT TO FULL SCALE

PROJECT NO.
400530

73-E-101
SHEET
OF

PLOTTED: 30-07-2019 17:29:15
D400530

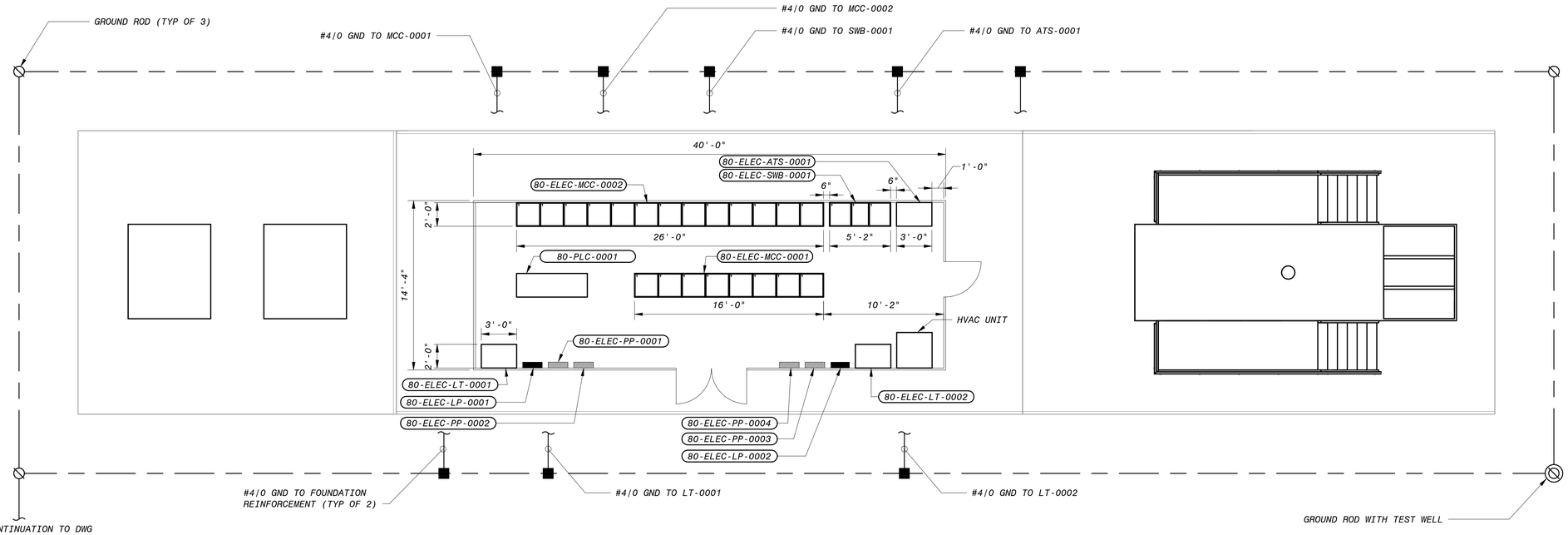

ELECTRICAL BIUILDING POWER AND GROUNDING PLAN

3/16" = 1'-0"

NOTES:

1. SEE DRAWING 00-E-001 AND 00-E-002 FOR ELECTRICAL LEGENDS, ABBREVIATIONS AND NOTES.
2. SEE DRAWING 10-E-100 FOR OVERALL ELECTRICAL SITE PLAN.

NO.	BY	CHK	APP	DATE	REVISIONS AND RECORD OF USE
B	JSL	MJK	EVB	7/30/2019	60% SUBMITTAL

BLACK & VEATCH JOINT VENTURE — FILANC — BLACK & VEATCH

CITY OF MORRO BAY
MORRO BAY WRF
RECLAMATION FACILITY (WRF)

ELECTRICAL BUILDING
ELECRICAL
POWER AND GROUNDING PLAN

DESIGNED: JSL
DETAILED: SBC
CHECKED:
APPROVED:
DATE:

0 1/2 1
IF THIS BAR DOES NOT MEASURE 1" THEN DRAWING IS NOT TO FULL SCALE

6" 4' 2' 0' 5' 10'
3/16" = 1'-0"

PROJECT NO.
400530

80-E-101
SHEET
OF

60% SUBMITTAL - NOT FOR CONSTRUCTION

PLOTTED: 30-07-2019 17:24:44
D400530

			PANEL BOARD: 80 ELEC PP 0001		BUS: COPPER			MAINS: 3P 150A MAIN BREAKER				
PHASE			SERVICE: 120/208V, 3PH, 4W, S/N		RATING: 150A			LOCATION: 80 ELECTRICAL BUILDING			PHASE	
"A"	"B"	"C"	MOUNTING: SURFACE								"A"	"B"	"C"
V.A.	V.A.	V.A.	LOAD	P	BKR	CKT #	BKR	P	LOAD		V.A.	V.A.	V.A.
250			HEADWORK AREA RIO PANEL (21-CTRL-RIO-0001)	1	20	1 2	20	1	HEADWORK AREA RIO PANEL (21-RIO-CTRL-0001) (RECEPTACLE)		250		
	250		80-CTRL-PLC-0001	1	20	3 4	20	1	80-CTRL-PLC-0001 (RECEPTACLE)			250	
		0	SPARE	1	20	5 6	20	1	SPARE				0
500			22 SCR SAMP 0010	1	20	7 8	20	1	SPARE		0		
	250		72-CTRL-RIO-0001 (RECEPTACLE)	1	20	9 10	20	1	72-CTRL-RIO-0001			250	
		250	71-AIR-LCP-0101	1	20	11 12	20	1	71-AIR-LCP-0201				250
200			72-DWT-V-0006	1	20	13 14	20	1	72-DWT-V-0101		200		
	200		72-DWT-V-0201	1	20	15 16	20	1	SPARE			0	
		0	SPARE	1	20	17 18	20	1	SPARE				0
0			SPARE	1	20	19 20	20	1	SPARE		0		
	0		SPARE	1	20	21 22	20	1	SPARE			0	
		0	SPARE	1	20	23 24	20	1	SPARE				0
0			SPARE	1	20	25 26	20	1	SPARE		0		
	0		SPARE	1	20	27 28	20	1	SPARE			0	
		0	SPARE	1	20	29 30	20	1	SPARE				0
0			SPARE	1	20	31 32	20	1	SPARE		0		
	0		SPARE	1	20	33 34	20	1	SPARE			0	
		0	SPARE	1	20	35 36	20	1	SPARE				0
0			SPARE	1	20	37 38	20	1	SPARE		0		
	0		SPARE	1	20	39 40	20	1	SPARE			0	
		0	SPARE	1	20	41 42	20	1	SPARE				0
950			TOTAL "A"			1400			TOTAL "A"		450		
	700		TOTAL "B"			1200			TOTAL "B"			500	
		250	TOTAL "C"			500			TOTAL "C"				250
			TOTAL			3100							

ELECTRICAL BUILDING 80-ELEC-PP-0001
POWER PANELS SCHEDULE

NO SCALE

			PANEL BOARD: 80 ELEC PP 0002		BUS: COPPER			MAINS: 3P 200A MAIN BREAKER				
PHASE			SERVICE: 480 3PH, 4W, S/N		RATING: 200A			LOCATION: 80 ELECTRICAL			PHASE	
"A"	"B"	"C"	MOUNTING: SURFACE					BUILDING			"A"	"B"	"C"
V.A.	V.A.	V.A.	LOAD	P	BKR	CKT #	BKR	P	LOAD		V.A.	V.A.	V.A.
345	345	345	PHP-101	3	15	1 2	15	3	PHP-104		345	345	345
345	345	345	PHP-102	3	15	3 4	15	2	PHP-107		345	345	345
345	345	345	PHP-103	3	15	5 6	15	3	HVAC 1 (Assumed)		345	345	345
345	345	345	22-SCR-V-1002	3	15	7 8	15	3	SPARE		0	0	0
0	0	0	SPARE	3	15	9 10	15	3	SPARE		0	0	0
0	0	0	SPARE	3	15	11 12	15	3	SPARE		0	0	0
0	0	0	SPARE	3	15	13 14	15	3	SPARE		0	0	0
0	0	0	SPARE	3	15	15 16	15	3	SPARE		0	0	0
0	0	0	SPARE	3	15	17 18	15	3	SPARE		0	0	0
0	0	0	SPARE	3	15	19 20	15	3	SPARE		0	0	0
0	0	0	SPARE	3	15	21 22	15	3	SPARE		0	0	0
0	0	0	SPARE	3	15	23 24	30	3	SPARE		0	0	0
0	0	0	SPARE	3	30	25 26	30	3	SPARE		0	0	0
0	0	0	SPARE	3	30	27 28	15	3	SPARE		0	0	0
1381			TOTAL "A"			2418			TOTAL "A"		1036		
	1381		TOTAL "B"			2418			TOTAL "B"			1036	
		1381	TOTAL "C"			2418			TOTAL "C"				1036
			TOTAL			7253							

ELECTRICAL UV BUILDING 80-ELEC-PP-0002
POWER PANELS SCHEDULE

NO SCALE

			PANEL BOARD: 80 ELEC PP 0003		BUS: COPPER			MAINS: 3P-150A MAIN BREAKER				
PHASE			SERVICE: 120/208V, 3PH, 4W, S/N		RATING: 150A			LOCATION: 80 ELECTRICAL BUILDING			PHASE	
"A"	"B"	"C"	MOUNTING: SURFACE								"A"	"B"	"C"
V.A.	V.A.	V.A.	LOAD	P	BKR	CKT #	BKR	P	LOAD		V.A.	V.A.	V.A.
500			31-CTRL-RIO-0001, 31-CTRL-RIO-0001 (Receptacle)	1	20	1 2	20	1	SPARE		0		
	200		31-BNR-AIT-1003	1	20	3 4	20	1	SPARE			0	
		0	SPARE	1	20	5 6	20	1	SPARE				0
0			SPARE	1	20	7 8	20	1	SPARE		0		
	200		31-BNR-AIT-2003	1	20	9 10	20	1	SPARE			0	
		100	31-RCW-V-0002	1	20	11 12	20	1	31-AER-LCP-0101				250
250			31-AER-LCP-0201	1	20	13 14	20	1	31-AER-LCP-0301		250		
	200		32-CA-V-1001	1	20	15 16	20	1	32-NOCL-V-1001			200	
		0	SPARE	1	20	17 18	20	1	32-CA-V-2001				200
200			32-NOCL-V-2001	1	20	19 20	20	1	SPARE		0		
	500		32-MBR-PLC-0001 32-MBR-PLC-0001 (Receptacle)	1	20	21 22	20	1	32-AIR-V-1001, 32-AIR-V-2001			400	
		400	32-IA-V-1001, 32-IA-V-2002	1	20	23 24	20	1	32-MEM-V-2014				200
200			32-MEM-V-1014	1	20	25 26	20	1	32-MEM-AIT-0001		200		
	0		SPARE	1	20	27 28	20	1	SPARE			0	
		0	SPARE	1	20	29 30	20	1	SPARE				0
0			SPARE	1	20	31 32	20	1	SPARE		0		
	0		SPARE	1	20	33 34	20	1	SPARE			0	
		0	SPARE	1	20	35 36	20	1	SPARE				0
0			SPARE	1	20	37 38	20	1	SPARE		0		
	0		SPARE	1	20	39 40	20	1	SPARE			0	
		0	SPARE	1	20	41 42	20	1	SPARE				0
1150			TOTAL 'A'			1600			TOTAL "A"		450		
	1100		TOTAL 'B'			1700			TOTAL "B"			600	
		500	TOTAL 'C'			1150			TOTAL "C"				650
			TOTAL			4450							

ELECTRICAL BUILDING 80-ELEC-PP-0003
POWER PANELS SCHEDULE

NO SCALE

			PANEL BOARD: 80 ELEC PP 0004		BUS: COPPER			MAINS: 3P 200A MAIN BREAKER				
PHASE			SERVICE: 480 3PH, 4W, S/N		RATING: 200A			LOCATION: 80 ELECTRICAL			PHASE	
"A"	"B"	"C"	MOUNTING: SURFACE					BUILDING			"A"	"B"	"C"
V.A.	V.A.	V.A.	LOAD	P	BKR	CKT #	BKR	P	LOAD		V.A.	V.A.	V.A.
345	345	345	PHP-101	3	15	1 2	15	3	PHP-104		345	345	345
345	345	345	PHP-102	3	15	3 4	15	2	PHP-107		345	345	345
345	345	345	PHP-103	3	15	5 6	15	3	HVAC 1 (Assumed)		345	345	345
345	345	345	32-MEM-V-1005	3	15	7 8	15	3	32-MEM-V-2005		345	345	345
345	345	345	31 AER V 1101	3	15	9 10	15	3	31 AER V 1201		345	345	345
345	345	345	31-WAS-V-1001	3	15	11 12	15	3	31-BNR-V-1001		345	345	345
345	345	345	31-AER-V-2101	3	15	13 14	15	3	31-AER-V-2201		345	345	345
345	345	345	31-WAS-V-2001	3	15	15 16	15	3	31-WAS-V-2001		345	345	345
345	345	345	32-MEM-V-1001	3	15	17 18	15	3	32-RAS-V-1001		345	345	345
345	345	345	32 MEM V 2001	3	15	19 20	15	3	32 RAS V 2001		345	345	345
0	0	0	SPARE	3	15	21 22	15	3	SPARE		0	0	0
0	0	0	SPARE	3	15	23 24	30	3	SPARE		0	0	0
0	0	0	SPARE	3	30	25 26	30	3	SPARE		0	0	0
0	0	0	SPARE	3	30	27 28	15	3	SPARE		0	0	0
3454			TOTAL 'A'			6907			TOTAL "A"		3454		
	3454		TOTAL 'B'			6907			TOTAL "B"			3454	
		3454	TOTAL 'C'			6907			TOTAL "C"				3454
			TOTAL			20722							

ELECTRICAL UV BUILDING 80-ELEC-PP-0004
POWER PANELS SCHEDULE

NO SCALE

NOTES:

1. SEE DRAWINGS 00-E-001 AND 00-E-002 FOR ELECTRICAL LEGEND, ABBREVIATIONS AND NOTES.

60% SUBMITTAL- NOT FOR CONSTRUCTION

NO.	BY	CHK	APP	DATE	REVISIONS AND RECORD OF USE
B	JSL	MJK	EVB	7/30/2019	60% SUBMITTAL

BLACK & VEATCH
JOINT VENTURE
FILANC
BLACK & VEATCH

CITY OF MORRO BAY
MORRO BAY WRF
RECLAMATION FACILITY (WRF)

ELECTRICAL BUILDING
ELECTRICAL
POWER PANELS SCHEDULE

DESIGNED: JSL
DETAILED: SBC
CHECKED:
APPROVED:
DATE:

0 1/2 1
IF THIS BAR DOES NOT MEASURE 1" THEN DRAWING IS NOT TO FULL SCALE

PROJECT NO.
400530

80-E-601
SHEET
OF

F09000A
D400330
PLOTTED: 7/30/2019 1:55 AM FILE: C:\PWBatchPDF\Process\400530 - Morro Bay WRF\400530-80-E-601.dwg

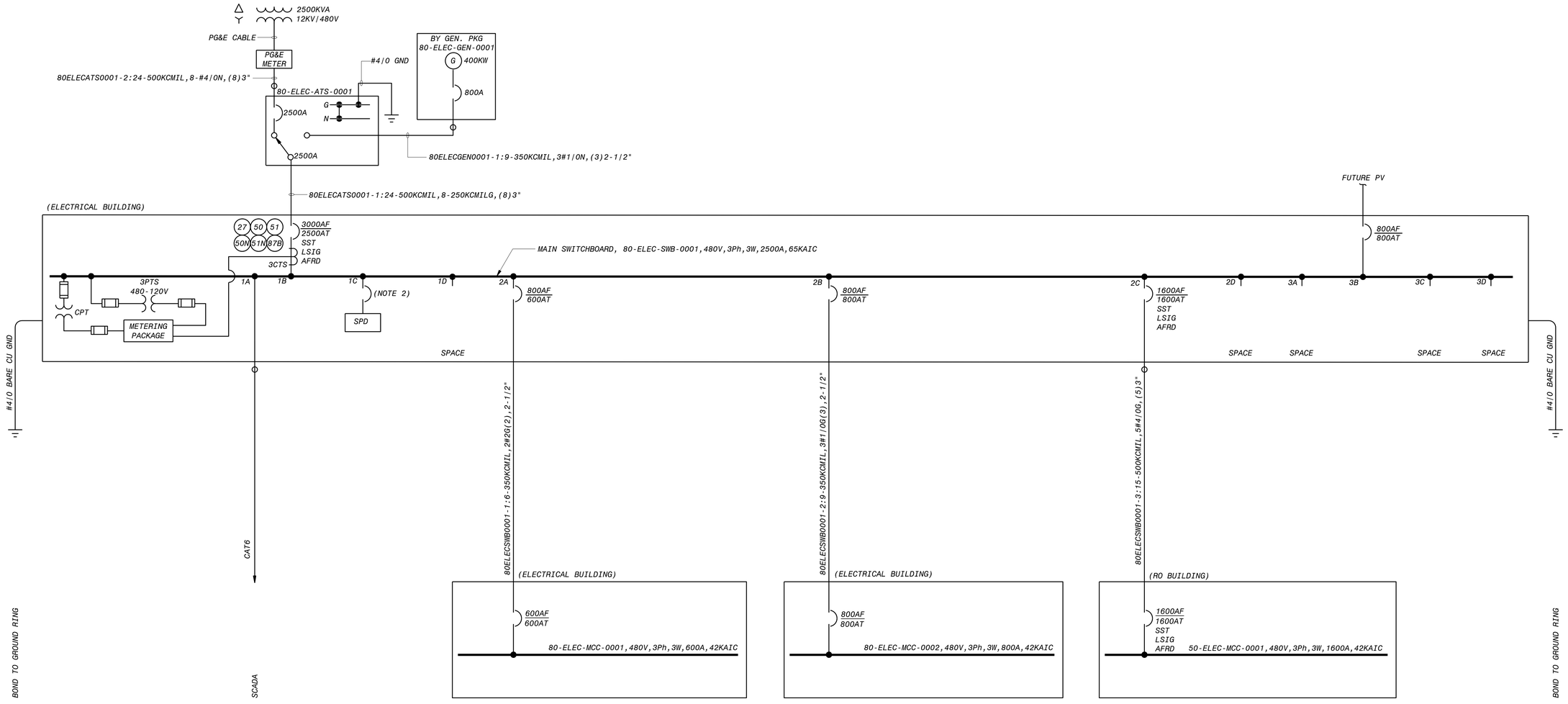

80-ELEC-SWB-0001 (ELECTRICAL BUILDING)
ONE-LINE DIAGRAM
NO SCALE

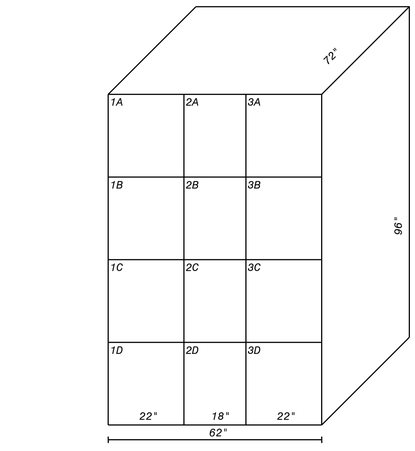

80-ELEC-SWB-0001 (ELECTRICAL BUILDING)
FRONT ELEVATION
NO SCALE

NOTES:

1. SEE DRAWINGS 00-E-001 AND 00-E-002 FOR ELECTRICAL LEGEND, ABBREVIATIONS AND NOTES.
2. CIRCUIT BREAKER SIZE SHALL BE RECOMMENDED BY SWITCHBOARD SUPPLIER.

60% SUBMITTAL- NOT FOR CONSTRUCTION

NO.	BY	CHK	APP	DATE	REVISIONS AND RECORD OF USE
B	JSL	MJK	EVB	7/30/2019	60% SUBMITTAL

BLACK & VEATCH
JOINT VENTURE
FILANC
BLACK&VEATCH

CITY OF MORRO BAY
MORRO BAY WRF
RECLAMATION FACILITY (WRF)

ELECTRICAL BUILDING
ELECTRICAL
80-ELEC-SWB-0001 ONE-LINE DIAGRAM

DESIGNED: JSL
DETAILED: SBC
CHECKED:
APPROVED:
DATE:

0 1/2 1
IF THIS BAR DOES NOT MEASURE 1" THEN DRAWING IS NOT TO FULL SCALE

PROJECT NO.
400530

80-E-701
SHEET
OF

FB0000A
D400530
PLOTTED: 7/30/2019 8:33 AM FILE: C:\PWBatchPDF\Process\400530 - Morro Bay WRF\400530-80-E-701.dwg

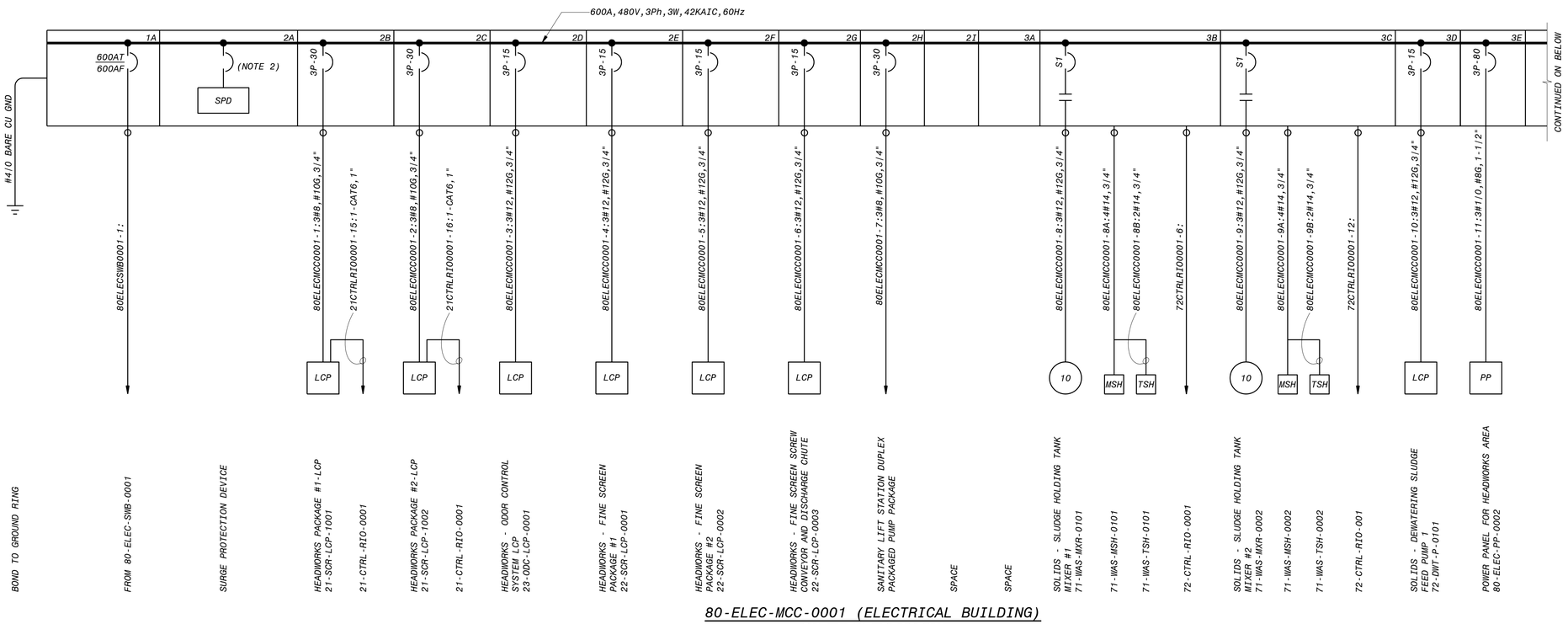

80-ELEC-MCC-0001 (ELECTRICAL BUILDING)
ONE-LINE DIAGRAM
NO SCALE

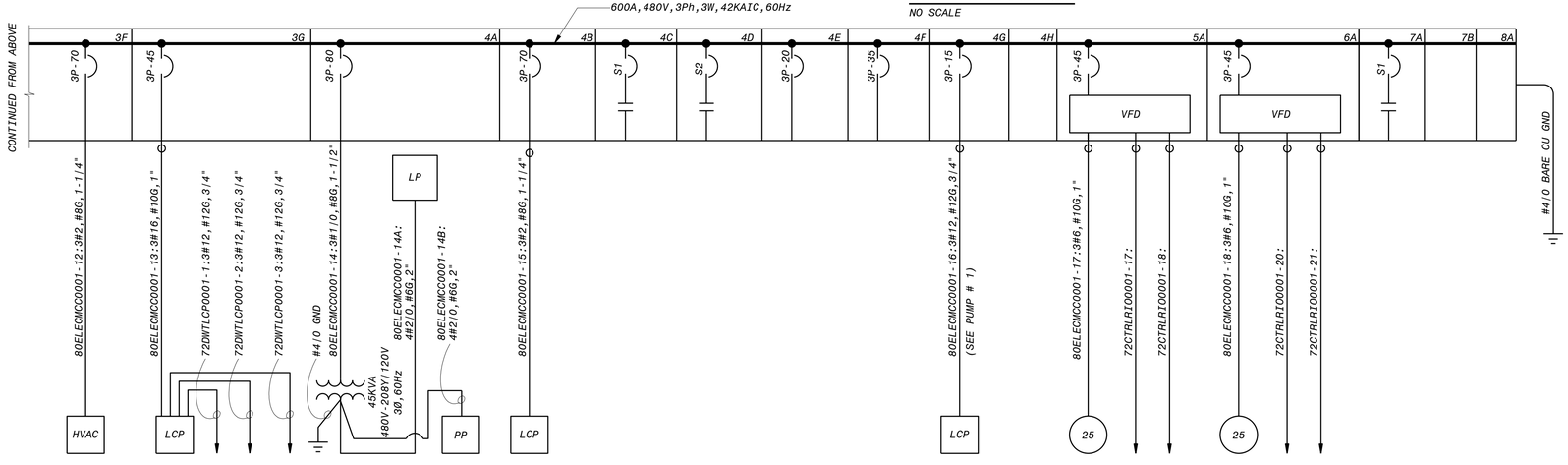

HVAC LOAD
SOLIDS - BELT FILTER PRESS
72-DWT-LCP-0001
72-DWT-LCP-1001
72-DWT-LCP-1002
72-DWT-LCP-1003
LIGHTING TRANSFORMER
(80-ELEC-LT-0001)
FOR HEADWORKS AREA
80-ELEC-LP-0001
80-ELEC-PP-0001
SAFE-DISC FILTER
73-FSW-LCP-0001
SPARE
SPARE
SPARE
SPARE
SOLIDS - DEWATERING SLUDGE
FEED PUMP 2
72-DWT-P-0201
SPACE
SOLIDS - ROTARY LOBE SLUDGE
HOLDING TANK BLOWER #1
71-AIR-BL-0101
72-CTRL-RIO-001
72-CTRL-RIO-001
SOLIDS - ROTARY LOBE SLUDGE
HOLDING TANK BLOWER #2
71-AIR-BL-0201
72-CTRL-RIO-001
72-CTRL-RIO-001
SPARE
SPACE FOR HVAC EQUIPMENT
SPACE FOR HVAC EQUIPMENT
BOND TO GROUND RING

80-ELEC-MCC-0001 (ELECTRICAL BUILDING)
ONE-LINE DIAGRAM
NO SCALE

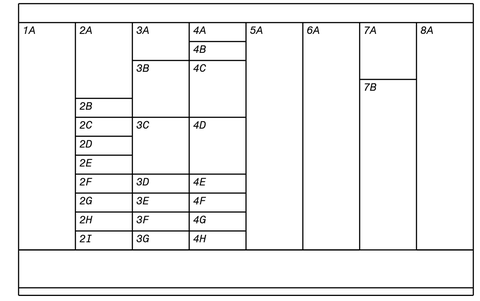

80-ELEC-MCC-0001 (ELECTRICAL BUILDING)
FRONT ELEVATION
NO SCALE

NOTES:

1. SEE DRAWINGS 00-E-001 AND 00-E-002 FOR ELECTRICAL LEGEND, ABBREVIATIONS AND NOTES.
2. CIRCUIT BREAKER SIZE SHALL BE RECOMMENDED BY MCC SUPPLIER.

60% SUBMITTAL- NOT FOR CONSTRUCTION

NO.	BY	CHK	APP	DATE	REVISIONS AND RECORD OF USE
B	JSL	MJK	EVB	7/30/2019	60% SUBMITTAL

BLACK & VEATCH
JOINT VENTURE
FILANC
BLACK & VEATCH

CITY OF MORRO BAY
MORRO BAY WRF
RECLAMATION FACILITY (WRF)

ELECTRICAL BUILDING
ELECTRICAL
80-ELEC-MCC-0001 ONE-LINE DIAGRAM

DESIGNED: JSL
DETAILED: SBC
CHECKED:
APPROVED:
DATE:

0 1/2 1
IF THIS BAR DOES NOT MEASURE 1" THEN DRAWING IS NOT TO FULL SCALE

PROJECT NO.
400530

80-E-702
SHEET
OF

FB0000A
D400530
PLOTTED: 7/30/2019 8:33 AM FILE: C:\PWBatchPDF\Process\400530 - Morro Bay WRF\400530-80-E-702.dwg

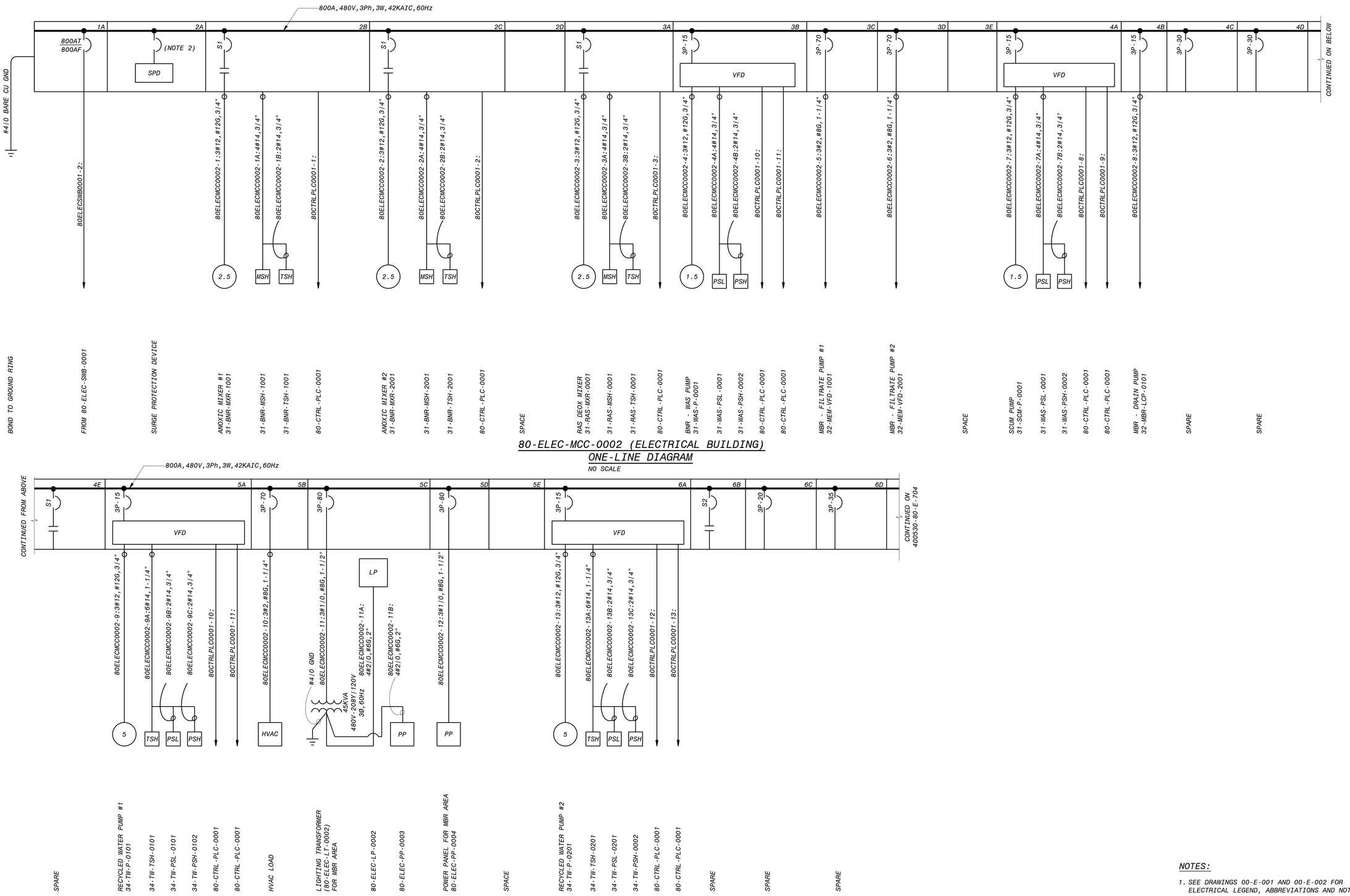

80-ELEC-MCC-0002 (ELECTRICAL BUILDING)
ONE-LINE DIAGRAM
NO SCALE

80-ELEC-MCC-0002 (ELECTRICAL BUILDING)
ONE-LINE DIAGRAM
NO SCALE

NOTES:

1. SEE DRAWINGS 00-E-001 AND 00-E-002 FOR ELECTRICAL LEGEND, ABBREVIATIONS AND NOTES.
2. CIRCUIT BREAKER SIZE SHALL BE RECOMMENDED BY MCC SUPPLIER.

60% SUBMITTAL- NOT FOR CONSTRUCTION

NO.	BY	CHK	APP	DATE	REVISIONS AND RECORD OF USE
B	JSL	MJK	EVB	7/30/2019	60% SUBMITTAL

BLACK & VEATCH

JOINT VENTURE

FILANC

BLACK & VEATCH

CITY OF MORRO BAY
MORRO BAY WRF
RECLAMATION FACILITY (WRF)

ELECTRICAL BUILDING
ELECTRICAL
80-ELEC-MCC-0002 ONE-LINE DIAGRAM

DESIGNED: JSL
DETAILED: SBC
CHECKED:
APPROVED:
DATE:

0 1/2 1
IF THIS BAR DOES NOT MEASURE 1" THEN DRAWING IS NOT TO FULL SCALE

PROJECT NO.
400530

80-E-703
SHEET
1 OF 2

F09000A
D400530
PLOTTED: 7/30/2019 8:34 AM FILE: C:\PWBatchPDF\Process\400530 - Morro Bay WRF\400530-80-E-703.dwg

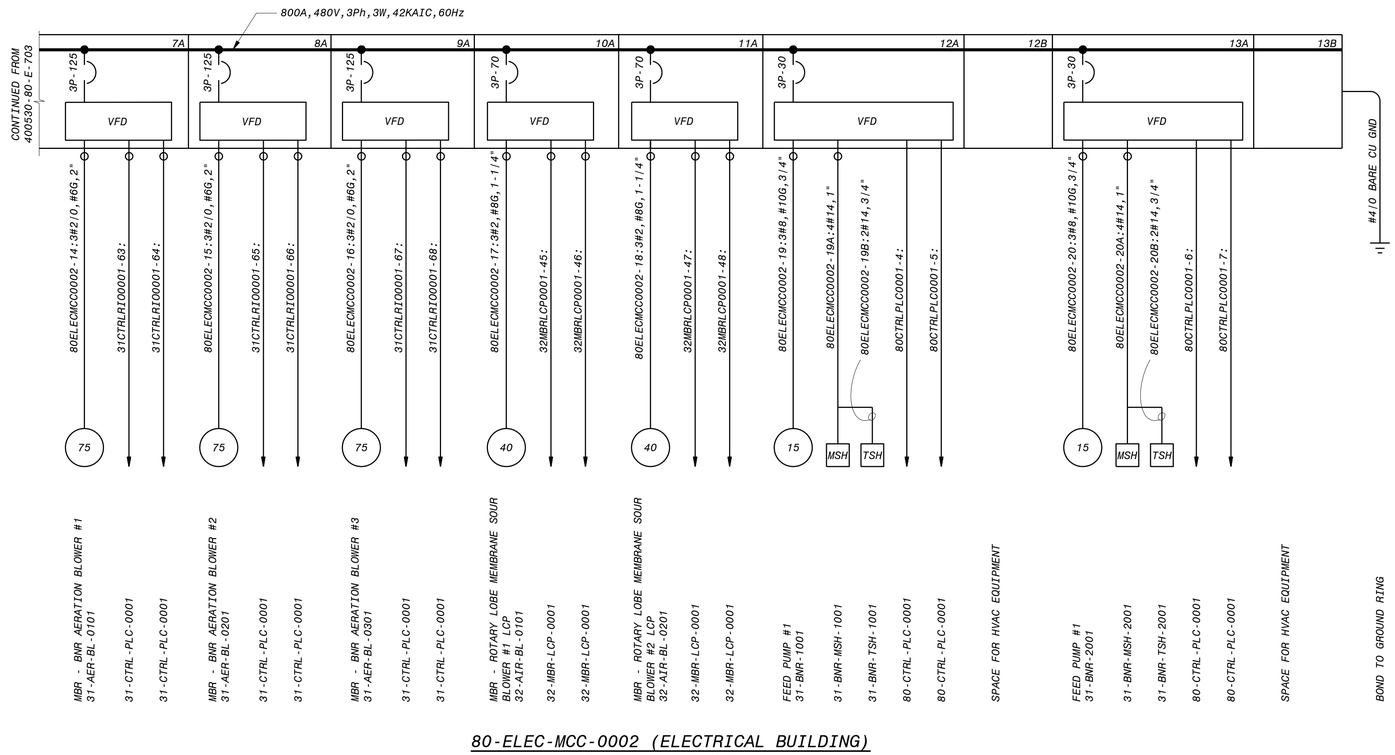

80-ELEC-MCC-0002 (ELECTRICAL BUILDING) ONE-LINE DIAGRAM

NO SCALE

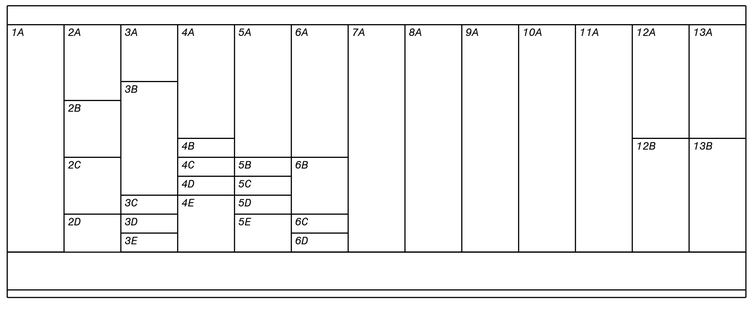

80-ELEC-MCC-0002 (ELECTRICAL BUILDING) FRONT ELEVATION

NO SCALE

NOTES:

1. SEE DRAWINGS 00-E-001 AND 00-E-002 FOR ELECTRICAL LEGEND, ABBREVIATIONS AND NOTES.
2. CIRCUIT BREAKER SIZE SHALL BE RECOMMENDED BY MCC SUPPLIER.

60% SUBMITTAL- NOT FOR CONSTRUCTION

NO.	BY	CHK	APP	DATE	REVISIONS AND RECORD OF USE
B	JSL	MJK	EVB	7/30/2019	60% SUBMITTAL

BLACK & VEATCH
JOINT VENTURE
FILANC
BLACK & VEATCH

CITY OF MORRO BAY
MORRO BAY WRF
RECLAMATION FACILITY (WRF)

ELECTRICAL BUILDING
ELECTRICAL
80-ELEC-MCC-0002 ONE-LINE DIAGRAM

DESIGNED: JSL
DETAILED: SBC
CHECKED:
APPROVED:
DATE:

0 1/2 1
IF THIS BAR DOES NOT MEASURE 1" THEN DRAWING IS NOT TO FULL SCALE

PROJECT NO.
400530

80-E-704
SHEET
2 OF 2

FB0000A
D400530
PLOTTED: 7/30/2019 8:34 AM FILE: C:\PWBatchPDF\Process\400530 - Morro Bay WRF\400530-80-E-704.dwg

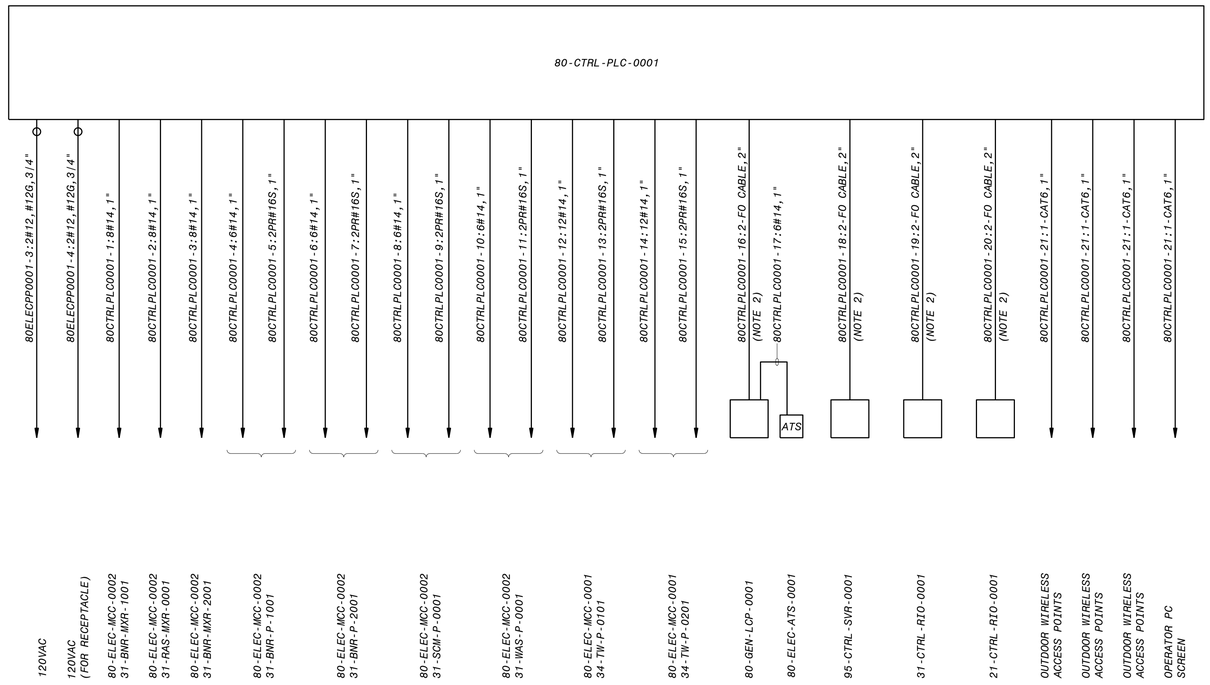

80-CTRL-PLC-0001 (ELECTRICAL BUILDING)
ONE-LINE DIAGRAM

NO SCALE

NOTES:

1. SEE DRAWINGS 00-E-001 AND 00-E-002 FOR ELECTRICAL LEGEND, ABBREVIATIONS AND NOTES.
2. SEE DRAWING 00-T-701 FOR FIBRE OPTIC CABLE REQUIREMENT.

60% SUBMITTAL- NOT FOR CONSTRUCTION

NO.	BY	CHK	APP	DATE	REVISIONS AND RECORD OF USE
B	JSL	MJK	EVB	7/30/2019	60% SUBMITTAL

BLACK & VEATCH

JOINT VENTURE

FILANC

BLACK & VEATCH

CITY OF MORRO BAY
MORRO BAY WRF
RECLAMATION FACILITY (WRF)

ELECTRICAL BUILDING
ELECTRICAL
80-CTRL-PLC-0001 ONE-LINE DIAGRAM

DESIGNED: JSL
DETAILED: SBC
CHECKED:
APPROVED:
DATE:

0 1/2 1
IF THIS BAR DOES NOT MEASURE 1" THEN DRAWING IS NOT TO FULL SCALE

PROJECT NO.
400530

80-E-711
SHEET
OF

FB0000A
D400530
PLOTTED: 7/30/2019 8:34 AM FILE: C:\PWBatchPDF\Process\400530 - Morro Bay WRF\400530-80-E-711.dwg

CHEMICAL CONTAINMENT BASIN WITH INTERGRAL SCALE (TYP OF 4)

CHEMICAL TOTE (TYP OF 4)

GROUND ROD WITH TEST WELL

#4/0 GND TO FOUNDATION REINFORCING

#4/0 GND RING (TYP)

#4/0 GND TO METAL UNDERGROUND WATER PIPING

#4/0 GND TO BUILDING STEEL

TRUCK UNLOADING AREA

NOTES:

1. SEE DRAWING 00-E-001 AND 00-E-002 FOR ELECTRICAL LEGENDS, ABBREVIATIONS AND NOTES.
2. SEE DRAWING 10-E-100 FOR OVERALL ELECTRICAL SITE PLAN.

WE-0001

WIT-0001

90-CA-LCP-0201

90-CA-LCP-0101

90-NHS-LCP-0001

90-ANTI-LCP-0001

90-NAOH-LCP-201

90-NAOH-LCP-0101

90-NAOH-LCP-0301

90-NOCL-LCP-601

90-NOCL-LCP-701

90-NOCL-LCP-501

90-NOCL-LCP-401

90-NOCL-LCP-301

90-NOCL-LCP-201

90-NOCL-LCP-101

LE/LIT-0001

SULFURIC ACID AREA

CITRIC ACID AREA

SODIUM BISULFITE AREA

ANTISCALE AREA

SODIUM HYDROXIDE TANK

HSO4-P-0101

SODIUM HYPOCHLORITE TANK

HSO4-P-0101

EMERGENCY EYEWASH STATION (TYP OF 6)

GROUND ROD (TYP OF 3)

#4/0 GND TO BUILDING STEEL

#4/0 GND TO METAL UNDERGROUND WATER PIPING

#4/0 GND TO NAOH-T-0001

#4/0 GND TO NACL-T-0001

#4/0 GND TO FOUNDATION REINFORCING

CHEMICAL FACILITY POWER AND GROUNDING PLAN

3/8" = 1'-0"

12" 0' 1' 2' 3' 4' 5' 6' 7'

3/8" = 1'-0"

60% SUBMITTAL - NOT FOR CONSTRUCTION

NO.	BY	CHK	APP	DATE	REVISIONS AND RECORD OF USE
B	JSL	MJK	EVB	7/30/2019	60% SUBMITTAL

BLACK & VEATCH

JOINT VENTURE

FILANC

BLACK & VEATCH

CITY OF MORRO BAY
MORRO BAY WATER
RECLAMATION FACILITY (WRF)

CHEMICAL FACILITY
ELECTRICAL
POWER AND GROUNDING PLAN

DESIGNED: JSL
DETAILED: SBC
CHECKED:
APPROVED:
DATE:

0 1/2 1

IF THIS BAR DOES NOT MEASURE 1" THEN DRAWING IS NOT TO FULL SCALE

PROJECT NO.
400530

90-E-101
SHEET
OF

PLOTTED: 30-07-2019 17:32:24

D400530

90-CTRL-RIO-0001 (CHEMICAL FACILITY)
ONE-LINE DIAGRAM
NO SCALE

90-CTRL-RIO-0001 (CHEMICAL FACILITY)
ONE-LINE DIAGRAM
NO SCALE

NOTES:

1. SEE DRAWINGS 00-E-001 AND 00-E-002 FOR ELECTRICAL LEGEND, ABBREVIATIONS AND NOTES.
2. SEE DRAWING 00-T-701 FOR FIBRE OPTIC CABLE REQUIREMENT.

NO.	BY	CHK	APP
B	JSL	MJK	EVB

DATE 7/30/2019 — 60% SUBMITTAL

REVISIONS AND RECORD OF USE

BLACK & VEATCH

JOINT VENTURE

BLACK & VEATCH

FILANC

CITY OF MORRO BAY
MORRO BAY WRF
RECLAMATION FACILITY (WRF)

CHEMICAL FACILITY
ELECTRICAL
90-CTRL-RIO-0001 ONE-LINE DIAGRAM

DESIGNED: JSL
DETAILED: SBC
CHECKED:
APPROVED:
DATE:

0 1/2 1
IF THIS BAR DOES NOT MEASURE 1" THEN DRAWING IS NOT TO FULL SCALE

PROJECT NO.
400530

90-E-711
SHEET
OF

FB0000A
D400530
PLOTTED: 7/30/2019 8:35 AM FILE: C:\PWBatchPDF\Process\400530 - Morro Bay WRF\400530-90-E-711.dwg

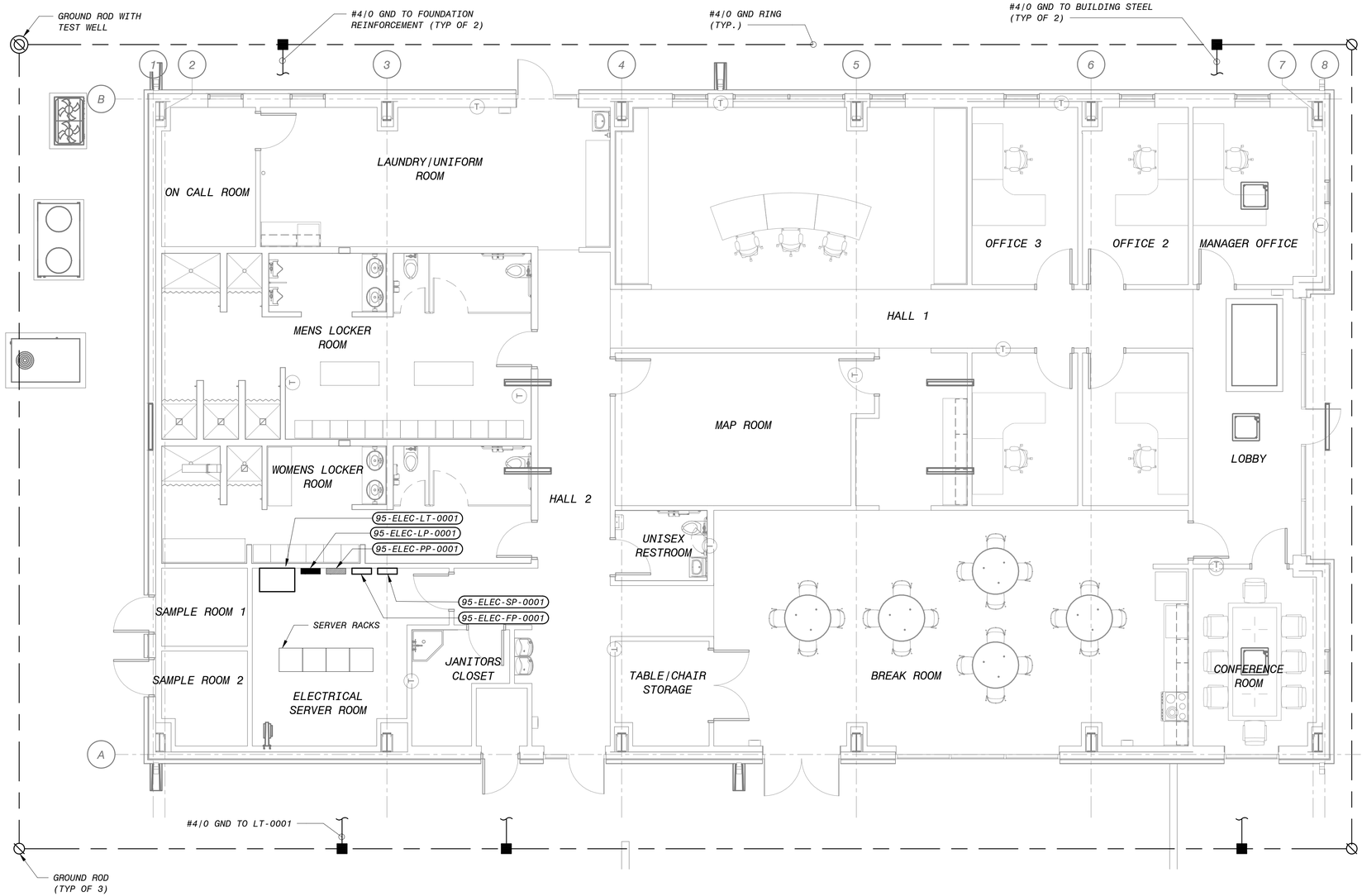

OPERATIONS BUILDING BUILDING POWER AND GROUNDING

3/16" = 1'-0"

NOTES-

1. SEE DRAWING 00-E-001 AND 00-E-002 FOR ELECTRICAL LEGENDS, ABBREVIATIONS AND NOTES.
2. SEE DRAWING 10-E-100 FOR OVERALL ELECTRICAL SITE PLAN.

NO.	BY	CHK	APP	DATE	REVISIONS AND RECORD OF USE
B	JSL	MJK	EVB	7/30/2019	60% SUBMITTAL

BLACK & VEATCH

JOINT VENTURE

FILANC

BLACK & VEATCH

CITY OF MORRO BAY
MORRO BAY WRF
RECLAMATION FACILITY (WRF)

OPERATIONS BUILDING
ELECTRICAL
POWER AND GROUNDING

DESIGNED: JSL
DETAILED: SBC
CHECKED:
APPROVED:
DATE:

0 1/2 1
IF THIS BAR DOES NOT MEASURE 1" THEN DRAWING IS NOT TO FULL SCALE

PROJECT NO.
400530

95-E-101
SHEET
OF

6" 4' 2' 0' 5' 10'
3/16" = 1'-0"

60% SUBMITTAL- NOT FOR CONSTRUCTION

PLOTTED: 30-07-2019 17:38:13
D400530

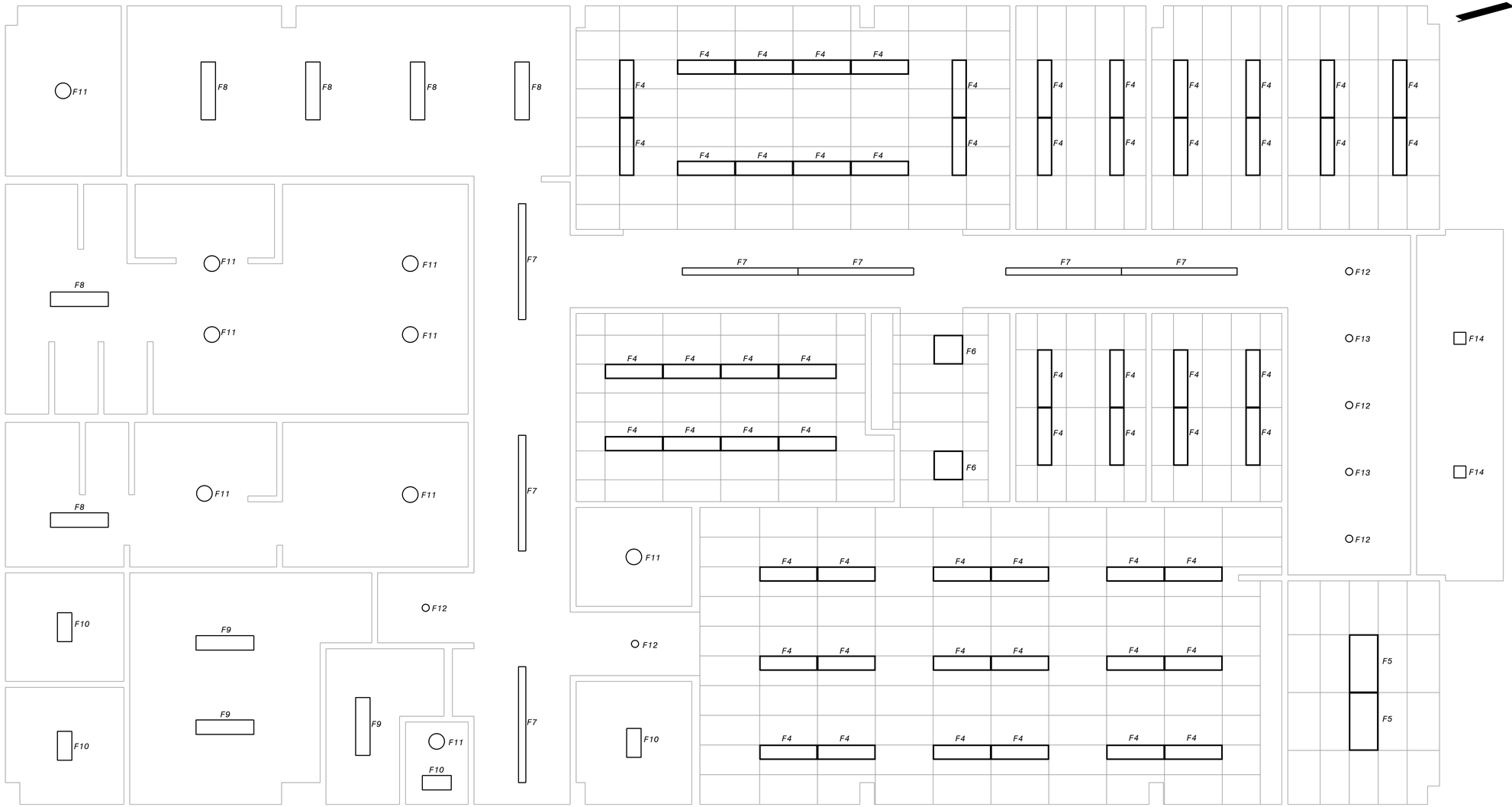

OPERATIONS BUILDING LIGHTING PLAN
1/4"=1'-0"

LIGHTING FIXTURE SCHEDULE	
FIXTURE	DESCRIPTION
F4	1' X 4' RECESSED DIRECT / INDIRECT LED TROFFER.
F5	2' X 4' RECESSED DIRECT / INDIRECT LED TROFFER.
F6	2' X 2' RECESSED DIRECT / INDIRECT LED TROFFER.
F7	8' LONG DIRECT / INDIRECT LED SURFACE STRIP LIGHT.
F8	1' X 4' SURFCAE LED WRAPAROUND FIXTURE.
F9	1' X 4' SURFACE LED UTILITY FIXTURE.
F10	1' X 2' SURFACE LED UTILITY FIXTURE.
F11	13" DIA. SURFACE LED SLIM ROUND FIXTURE.
F12	6" DIA. RECESSED LED WIDE ANGLE DOWNLIGHT FIXTURE.
F13	6" DIA. RECESSED LED ADJUSTABLE SPOT FIXTURE.
F14	10" X 10" SURFACE LED WET LOCATION FIXTURE.

NOTES:

1. SEE DRAWINGS 00-E-001 AND 00-E-002 FOR ELECTRICAL LEGEND, ABBREVIATIONS AND NOTES.

4' 2' 0 4' 8'
1/4"=1'-0"

60% SUBMITTAL- NOT FOR CONSTRUCTION

NO.	BY	CHK	APP	DATE	REVISIONS AND RECORD OF USE
B	JSL	MJK	EVB	7/30/2019	60% SUBMITTAL

BLACK & VEATCH
JOINT VENTURE
FILANC
BLACK&VEATCH

CITY OF MORRO BAY
MORRO BAY WRF
RECLAMATION FACILITY (WRF)

OPERATIONS BUILDING
ELECTRICAL
LIGHTING PLAN

DESIGNED: JSL
DETAILED: SBC
CHECKED:
APPROVED:
DATE:

0 1/2 1
IF THIS BAR DOES NOT MEASURE 1" THEN DRAWING IS NOT TO FULL SCALE

PROJECT NO.
400530

95-E-111
SHEET
OF

FD9000A
D400530
PLOTTED: 7/30/2019 12:52 PM FILE: C:\pw_working\bvw_americas\d0083637\400530-95-E-111.dwg

PANEL BOARD: 95-ELEC-PP-0001					BUS: COPPER				MAINS: 3P-200A MAIN BREAKER				
PHASE			SERVICE: 480 3PH, 4W, SIN		RATING: 200A				LOCATION: OPERATIONS BUILDING		PHASE		
'A'	"B"	"C"	MOUNTING: SURFACE								'A'	'B'	'C'
V.A.	V.A.	V.A.	LOAD	P	BKR	CKT #	BKR	P	LOAD		V.A.	V.A.	V.A.
345	345	345	PHP-101	3	15	1 , 2	15	3	PHP-104		345	345	345
345	345	345	PHP-102	3	15	3 , 4	15	2	PHP-107		345	345	345
345	345	345	PHP-103	3	15	5 , 6	15	3	HVAC 1 (Assumed)		345	345	345
10000	10000	10000	95 ELEC LT 0001	3	80	7 , 8	15	3	SPARE		0	0	0
0	0	0	SPARE	3	15	9 , 10	15	3	SPARE		0	0	0
0	0	0	SPARE	3	15	11 , 12	15	3	SPARE		0	0	0
0	0	0	SPARE	3	15	13 , 14	15	3	SPARE		0	0	0
0	0	0	SPARE	3	15	15 , 16	15	3	SPARE		0	0	0
0	0	0	SPARE	3	15	17 , 18	15	3	SPARE		0	0	0
0	0	0	SPARE	3	15	19 , 20	15	3	SPARE		0	0	0
0	0	0	SPARE	3	15	21 , 22	15	3	SPARE		0	0	0
0	0	0	SPARE	3	15	23 , 24	30	3	SPARE		0	0	0
0	0	0	SPARE	3	30	25 , 26	30	3	SPARE		0	0	0
0	0	0	SPARE	3	30	27 , 28	15	3	SPARE		0	0	0
11036			TOTAL 'A'			12072				TOTAL 'A'	1036		
	11036		TOTAL 'B'			12072				TOTAL 'B'		1036	
		11036	TOTAL 'C'			12072				TOTAL 'C'			1036
			TOTAL			36217							

OPERATIONS BUILDING 95-ELEC-PP-0001
POWER PANELS SCHEDULE
NO SCALE

NOTES:

1. SEE DRAWINGS 00-E-001 AND 00-E-002 FOR ELECTRICAL LEGEND, ABBREVIATIONS AND NOTES.

60% SUBMITTAL- NOT FOR CONSTRUCTION

NO.	BY	CHK	APP	DATE	REVISIONS AND RECORD OF USE
B	JSL	MJK	EVB	7/30/2019	60% SUBMITTAL

BLACK & VEATCH

JOINT VENTURE

FILANC

BLACK & VEATCH

CITY OF MORRO BAY
MORRO BAY WRF
RECLAMATION FACILITY (WRF)

OPERATIONS BUILDING
ELECTRICAL
POWER PANELS SCHEDULE

DESIGNED: JSL
DETAILED: SBC
CHECKED:
APPROVED:
DATE:

0 1/2 1
IF THIS BAR DOES NOT MEASURE 1" THEN DRAWING IS NOT TO FULL SCALE

PROJECT NO.
400530

95-E-601
SHEET
1 OF 1

FB0000A
D400530
PLOTTED: 7/30/2019 8:35 AM FILE: C:\PWBatchPDF\Process\400530 - Morro Bay WRF\400530-95-E-601.dwg

GROUND ROD WITH TEST WELL

#4/0 GND TO FOUNDATION REINFORCEMENT (TYP OF 2)

#4/0 GND RING (TYP.)

#4/0 GND TO BUILDING STEEL (TYP OF 2)

1 2 3 4 5 6 7

A

B

LABORATORY

CONTROL ROOM

I AND C WORKSHOP

UNISEX RESTROOM

UNISEX RESTROOM

PAINT AND FUEL STORAGE

MAINTENANCE ROOM

#4/0 GND TO LT-0001

96-ELEC-LT-0001

96-ELEC-LP-0001

96-ELEC-PP-0001

96-ELEC-FP-0001

96-ELEC-SP-0001

WELDING RECEPTACLE
96-ELEC-REC-0001

WELDING RECEPTACLE
96-ELEC-REC-0002

GROUND ROD (TYP OF 3)

NOTES-

1. SEE DRAWING 00-E-001 AND 00-E-002 FOR ELECTRICAL LEGENDS, ABBREVIATIONS AND NOTES.
2. SEE DRAWING 10-E-100 FOR OVERALL ELECTRICAL SITE PLAN.

MAINTAINCE BUILDING POWER AND GROUNDING PLAN

1/4" = 1'-0"

4' 2' 0' 4' 8'

1/4" = 1'-0"

60% SUBMITTAL - NOT FOR CONTRUCTION

NO.	BY	CHK	APP	DATE	REVISIONS AND RECORD OF USE
B	JSL	MJK	EVB	7/30/2019	60% SUBMITTAL

BLACK & VEATCH JOINT VENTURE

BLACK & VEATCH

FILANC

CITY OF MORRO BAY
MORRO BAY WRF
RECLAMATION FACILITY (WRF)

MAINTAINCE BUILDING
ELECTRICAL
POWER AND GROUNDING PLAN

DESIGNED: JSL
DETAILED: SBC
CHECKED:
APPROVED:
DATE:

0 1/2 1

IF THIS BAR DOES NOT MEASURE 1" THEN DRAWING IS NOT TO FULL SCALE

PROJECT NO.
400530

96-E-101
SHEET
OF

PLOTTED: 30-07-2019 17:42:46
D400530

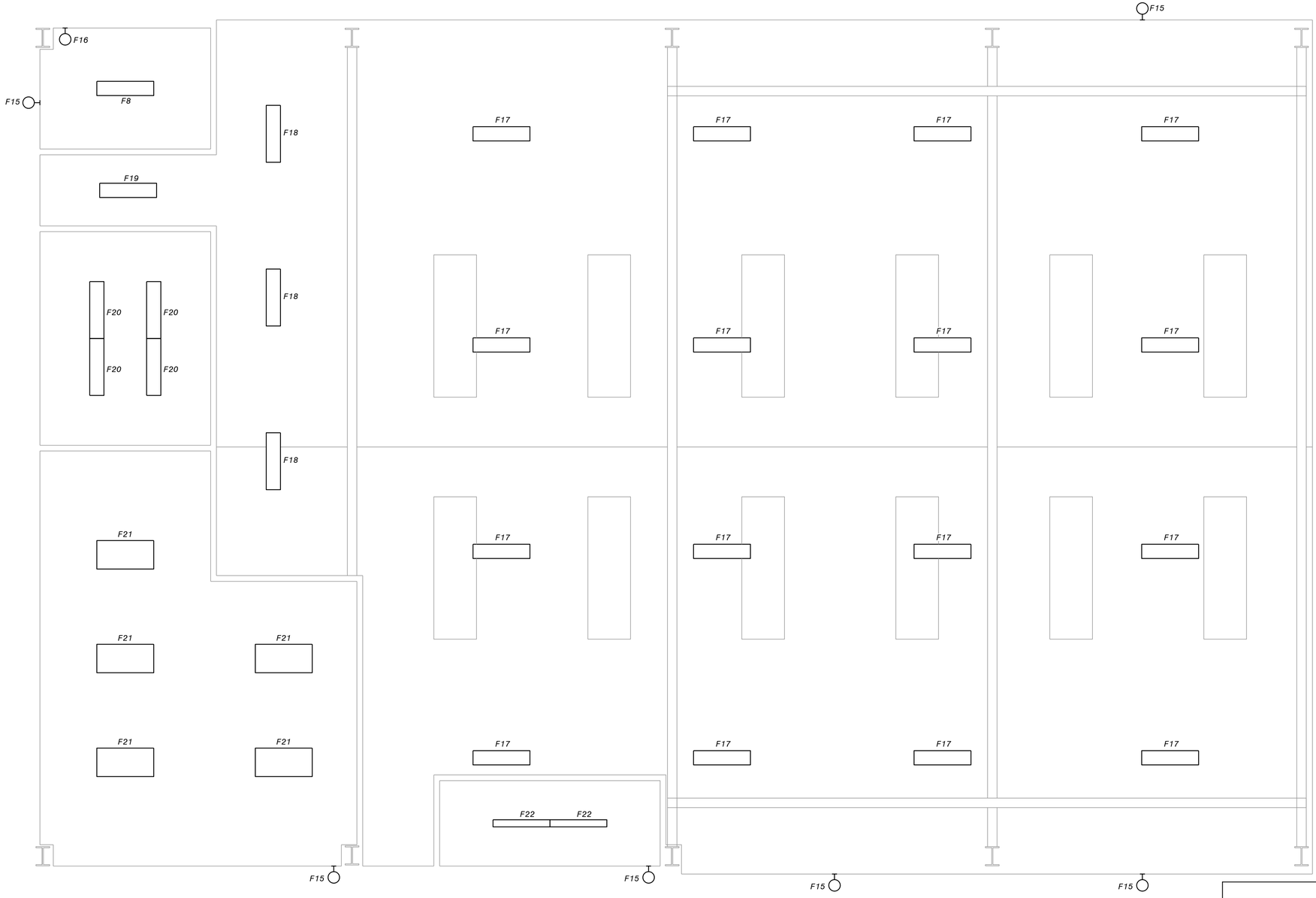

MAINTENANCE BUILDING LIGHTING PLAN

1/4"=1'-0"

LIGHTING FIXTURE SCHEDULE	
FIXTURE	DESCRIPTION
F8	1' X 4' SURFACE LED WRAPAROUND FIXTURE.
F15	WALL SURFACE LED WET LOCATION WALL PACK FIXTURE.
F16	WALL MOUNTED LED VANITY FIXTURE.
F17	1' X 4' SUSPENDED LED HIBAY FIXTURE, HIGH LUMEN DIMMABLE.
F18	1' X 4' SUSPENDED LED HIBAY FIXTURE, MID LUMEN DIMMABLE.
F19	1' X 4' SUSPENDED LED FIXTURE.
F20	1' X 4' DIRECT / INDIRECT LED SURFACE FIXTURE.
F21	2' X 4' DIRECT / INDIRECT LED SURFACE FIXTURE.
F22	4' VAPOR TIGHT LED STRIP LIGHT.

NOTES:

1. SEE DRAWINGS 00-E-001 AND 00-E-002 FOR ELECTRICAL LEGEND, ABBREVIATIONS AND NOTES.

4' 2' 0 4' 8'

1/4"=1'-0"

60% SUBMITTAL- NOT FOR CONSTRUCTION

NO.	BY	CHK	APP	DATE	REVISIONS AND RECORD OF USE
B	JSL	MJK	EVB	7/30/2019	60% SUBMITTAL

BLACK & VEATCH JOINT VENTURE

BLACK & VEATCH

FILANC

CITY OF MORRO BAY
MORRO BAY WRF
RECLAMATION FACILITY (WRF)

MAINTENANCE BUILDING
ELECTRICAL
LIGHTING PLAN

DESIGNED: JSL
DETAILED: SBC
CHECKED:
APPROVED:
DATE:

0 1/2 1

IF THIS BAR DOES NOT MEASURE 1" THEN DRAWING IS NOT TO FULL SCALE

PROJECT NO.
400530

96-E-111
SHEET
OF

FD9000A
D400330
PLOTTED: 7/30/2019 1:58 AM FILE: C:\PWBatchPDF\Process\400530 - Morro Bay WRF\400530-96-E-111.dwg

			PANEL BOARD: 96-ELEC-PP-0001		BUS: COPPER			MAINS: 3P-250A MAIN BREAKER				
PHASE			SERVICE: 480 3PH, 4W, SIN		RATING: 250A			LOCATION: MAINTAINENCE BUILDING			PHASE	
"A"	"B"	"C"	MOUNTING: SURFACE									
V.A.	V.A.	V.A.	LOAD	P	BKR	CKT #	BKR	P	LOAD	"A" V.A.	"B" V.A.	"C" V.A.
345	345	345	PHP-108	3	15	1 2	15	3	PHP-109	345	345	345
3454	3454	0	Welding Socket # 1	2	40	3 4	40	2	Welding Socket # 2	0	3454	3454
345	345	345	HVAC 1 (Assumed)	3	15	5 6	15	3	HVAC 2 (Assumed)	345	345	345
1727	1727	1727	CRANE	3	30	7 8	15	3	SPARE	0	0	0
10000	10000	10000	96-ELEC-LT-0001	3	80	9 10	15	3	SPARE	0	0	0
0	0	0	SPARE	3	15	11 12	15	3	SPARE	0	0	0
0	0	0	SPARE	3	15	13 14	15	3	SPARE	0	0	0
0	0	0	SPARE	3	15	15 16	15	3	SPARE	0	0	0
0	0	0	SPARE	3	15	17 18	15	3	SPARE	0	0	0
0	0	0	SPARE	3	15	19 20	15	3	SPARE	0	0	0
0	0	0	SPARE	3	15	21 22	15	3	SPARE	0	0	0
0	0	0	SPARE	3	15	23 24	30	3	SPARE	0	0	0
0	0	0	SPARE	3	30	25 26	30	3	SPARE	0	0	0
0	0	0	SPARE	3	30	27 28	15	3	SPARE	0	0	0
15871			TOTAL 'A'			16582			TOTAL 'A'	691		
	15871		TOTAL 'B'			20016			TOTAL 'B'		4144	
		12418	TOTAL 'C'			16562			TOTAL 'C'			4144
			TOTAL			53140						

MAINTENANCE BUILDING 96-ELEC-PP-0001
POWER PANELS SCHEDULE
NO SCALE

NOTES:

1. SEE DRAWINGS 00-E-001 AND 00-E-002 FOR ELECTRICAL LEGEND, ABBREVIATIONS AND NOTES.

60% SUBMITTAL- NOT FOR CONSTRUCTION

NO.	BY	CHK	APP	DATE	REVISIONS AND RECORD OF USE
B	JSL	MJK	EVB	7/30/2019	60% SUBMITTAL

BLACK & VEATCH
JOINT VENTURE
FILANC
BLACK & VEATCH

CITY OF MORRO BAY
MORRO BAY WRF
RECLAMATION FACILITY (WRF)

MAINTENANCE BUILDING
ELECTRICAL
POWER PANELS SCHEDULE

DESIGNED: JSL
DETAILED: SBC
CHECKED:
APPROVED:
DATE:

0 1/2 1
IF THIS BAR DOES NOT MEASURE 1" THEN DRAWING IS NOT TO FULL SCALE

PROJECT NO.
400530

96-E-601
SHEET
OF

FD9000A
D400530
PLOTTED: 7/30/2019 7:42 PM FILE: C:\pw_working\bvw_americas\d0683637\400530-96-E-601.dwg