WATER RECLAMATION FACILITY

FOR THE CITY OF:

MORRO BAY, CA

PREPARED BY:

JOINT VENTURE

FILANC® BLACK & VEATCH



EXISTING MORRO BAY-CAYUCOS WASTEWATER TREATMENT PLANT

PROPOSED MORRO BAY WATER RECLAMATION FACILITY PARCEL



90% SUBMITTAL - NOT FOR CONSTRUCTION

NO.	BY	CHK	APP	DATE	REVISIONS AND RECORD OF USE
C	KEZ	RWF	EVB	3/31/2020	90% SUBMITTAL.
B	KEZ	RT	EVB	7/30/2019	60% SUBMITTAL.
A	KEZ	RWF	EVB	3/5/2019	30% SUBMITTAL.

REGISTERED PROFESSIONAL ENGINEER
ERICK V. BEVINGTON
No. C 78836
CIVIL
STATE OF CALIFORNIA

BLACK & VEATCH
JOINT VENTURE
FILANC®
BLACK & VEATCH

CITY OF MORRO BAY
MORRO BAY WATER RECLAMATION FACILITY (WRF)

GENERAL COVER SHEET

DESIGNED: EVB, KEZ
DETAILED: MAK
CHECKED:
APPROVED:
DATE:

0 1/2 1
IF THIS BAR DOES NOT MEASURE 1" THEN DRAWING IS NOT TO FULL SCALE

PROJECT NO. 400530

00-G-001
SHEET OF

D400530
FD81203_PW

GENERAL

SHEET NO.	DRAWING NO.	DESCRIPTION
1	00-G-001	GENERAL; COVER SHEET
2	00-G-002	GENERAL; SHEET LIST 1
3	00-G-003	GENERAL; SHEET LIST 2
4	00-G-004	GENERAL; ABBREVIATIONS
5	00-G-005	GENERAL; LEGEND
6	00-G-006	GENERAL; PROCESS SCHEMATIC
7	00-G-007	GENERAL; HYDRAULIC PROFILES
8	00-G-008	GENERAL; CODE CLASSIFICATION TABLE
9	00-G-009	GENERAL; GENERAL NOTES 1

CIVIL

SHEET NO.	DRAWING NO.	DESCRIPTION
10	10-C-001	SITE - OVERALL; EXISTING SITE GRADE AND FEATURES
11	10-C-002	SITE - OVERALL; SITE PREPARATION FINISHED GRADE OVERVIEW
12	10-C-003	SITE - OVERALL; ESTIMATED DEPTH FROM EXISTING GRADE TO BEDROCK
13	10-C-004	SITE - OVERALL; ESTIMATED DEPTH FROM SITE PREP GRADE TO BEDROCK
14	10-C-005	SITE - OVERALL; ESTIMATED DEPTH FROM SITE PREP GRADE TO EXISTING GRADE
15	10-C-006	SITE - OVERALL; SITE PREPARATION GRADING AND DRAINAGE KEY PLAN
16	10-C-101	SITE - AREA 1; SITE PREPARATION GRADING AND DRAINAGE PLAN
17	10-C-102	SITE - AREA 2; SITE PREPARATION GRADING AND DRAINAGE PLAN
18	10-C-103	SITE - AREA 3; SITE PREPARATION GRADING AND DRAINAGE PLAN
19	10-C-104	SITE - AREA 4; SITE PREPARATION GRADING AND DRAINAGE PLAN
20	10-C-105	SITE - OVERALL; DRAINAGE SWALES PLAN AND PROFILES
21	10-C-301	SITE - OVERALL; SITE PREPARATION SECTIONS 1
22	10-C-302	SITE - OVERALL; SITE PREPARATION SECTIONS 2
23	10-C-501	SITE - OVERALL; SITE PREPARATION DETAILS 1
24	10-C-502	SITE - OVERALL; SITE PREPARATION DETAILS 2
25	10-C-503	SITE - OVERALL; SITE PREPARATION DETAILS 3
26	10-C-601	SITE - OVERALL; SITE PREPARATION COORDINATE TABLES
27	11-C-001	SITE - OVERALL; GRADING AND PAVING KEY PLAN
28	11-C-002	SITE - OVERALL; GRADING AND PAVING OVERVIEW
29	11-C-101	SITE - ACCESS ROAD AREA; GRADING AND PAVING PLAN
30	11-C-102	SITE - SOUTH OPERATIONS AREA; GRADING AND PAVING PLAN
31	11-C-103	SITE - NORTH OPERATIONS AREA; GRADING AND PAVING PLAN
32	11-C-104	SITE - SOUTH PROCESS AREA; GRADING AND PAVING PLAN
33	11-C-105	SITE - NORTH PROCESS AREA; GRADING AND PAVING PLAN
34	11-C-301	SITE - OVERALL; GRADING AND PAVING SECTIONS AND DETAILS 1
35	11-C-302	SITE - OVERALL; GRADING AND PAVING SECTIONS AND DETAILS 2
36	11-C-303	SITE - OVERALL; GRADING AND PAVING SECTIONS AND DETAILS 3
37	11-C-304	SITE - OVERALL; GRADING AND PAVING SECTIONS AND DETAILS 4
38	11-C-601	SITE - OVERALL; COORDINATE TABLES 1
39	11-C-601	SITE - OVERALL; COORDINATE TABLES 2
40	12-C-001	SITE - OVERALL; PIPING KEY PLAN
41	12-C-100	SITE - NORTH TERESA ROAD AREA; PIPE INTERCONNECTION
42	12-C-101	SITE - SOUTH OPERATIONS AREA; PIPING PLAN
43	12-C-102	SITE - NORTH OPERATIONS AREA; PIPING PLAN
44	12-C-103	SITE - SOUTH PROCESS AREA; PIPING PLAN
45	12-C-104	SITE - NORTH PROCESS AREA; PIPING PLAN
46	12-C-200	SITE - OVERALL; SECTION KEY PLAN
47	12-C-201	SITE - SOUTH ENTRANCE AREA 1; SECTION PLAN
48	12-C-202	SITE - SOUTH ENTRANCE AREA 2; SECTION PLAN
49	12-C-203	SITE - EAST OPERATIONS AREA; SECTION PLAN
50	12-C-204	SITE - WEST OPERATIONS AREA; SECTION PLAN
51	12-C-205	SITE - SOUTHEAST CANOPIES AREA; SECTION PLAN
52	12-C-206	SITE - SOUTHWEST CANOPIES AREA; SECTION PLAN
53	12-C-207	SITE - WASHDOWN AREA; SECTION PLAN
54	12-C-208	SITE - NORTHWEST CANOPIES AREA; SECTION PLAN
55	12-C-209	SITE - CHEMICAL AREA; SECTION PLAN
56	12-C-210	SITE - RO FACILITY AREA; SECTION PLAN
57	12-C-211	SITE - SOUTH PROCESS AREA; SECTION PLAN
58	12-C-212	SITE - NORTH PROCESS AREA; SECTION PLAN
59	12-C-301	SITE - OVERALL; PIPING SECTIONS AND DETAILS 1
60	12-C-302	SITE - OVERALL; PIPING SECTIONS AND DETAILS 2
61	12-C-303	SITE - OVERALL; PIPING SECTIONS AND DETAILS 3
62	12-C-305	SITE - OVERALL; PIPING SECTIONS AND DETAILS 5
63	12-C-306	SITE - OVERALL; PIPING SECTIONS AND DETAILS 6
64	12-C-601	SITE; PIPELINE FITTING SCHEDULE 1 OF 3
65	12-C-602	SITE; PIPELINE FITTING SCHEDULE 2 OF 3
66	12-C-603	SITE; PIPELINE FITTING SCHEDULE 3 OF 3

LANDSCAPE

SHEET NO.	DRAWING NO.	DESCRIPTION
67	10-L-001	SITE - OVERALL; LANDSCAPING COVER SHEET
68	10-L-101	SITE - SOUTH OPERATIONS AREA; LANDSCAPING PLAN
69	10-L-102	SITE - NORTH OPERATIONS AREA; LANDSCAPING PLAN
70	10-L-103	SITE - SOUTH PROCESS AREA; LANDSCAPING PLAN
71	10-L-104	SITE - NORTH PROCESS AREA; LANDSCAPING PLAN
72	10-L-501	SITE - OVERALL; LANDSCAPING DETAILS
73	11-L-111	SITE - SOUTH OPERATIONS AREA; IRRIGATION PLAN
74	11-L-112	SITE - NORTH OPERATIONS AREA; IRRIGATION PLAN
75	11-L-113	SITE - SOUTH PROCESS AREA; IRRIGATION PLAN
76	11-L-114	SITE - NORTH PROCESS AREA; IRRIGATION PLAN
77	11-L-511	SITE - OVERALL; IRRIGATION DETAILS
78	11-L-512	SITE - OVERALL; IRRIGATION DETAILS

CIVIL MECHANICAL

SHEET NO.	DRAWING NO.	DESCRIPTION
79	00-M-501	GENERAL; CIVIL MECHANICAL COMMON DETAILS 1
80	00-M-502	GENERAL; CIVIL MECHANICAL COMMON DETAILS 2
81	00-M-503	GENERAL; CIVIL MECHANICAL COMMON DETAILS 3
82	00-M-504	GENERAL; CIVIL MECHANICAL COMMON DETAILS 4
83	00-M-505	GENERAL; CIVIL MECHANICAL COMMON DETAILS 5
84	00-M-506	GENERAL; CIVIL MECHANICAL COMMON DETAILS 6
85	00-M-507	GENERAL; CIVIL MECHANICAL COMMON DETAILS 7
86	00-M-508	GENERAL; CIVIL MECHANICAL COMMON DETAILS 8
87	00-M-509	GENERAL; CIVIL MECHANICAL COMMON DETAILS 9
88	00-M-510	GENERAL; CIVIL MECHANICAL COMMON DETAILS 10
89	00-M-511	GENERAL; CIVIL MECHANICAL COMMON DETAILS 11
90	00-M-512	GENERAL; CIVIL MECHANICAL COMMON DETAILS 12
91	00-M-513	GENERAL; CIVIL MECHANICAL COMMON DETAILS 13
92	00-M-514	GENERAL; CIVIL MECHANICAL COMMON DETAILS 14
93	00-M-515	GENERAL; CIVIL MECHANICAL COMMON DETAILS 15
94	00-M-516	GENERAL; CIVIL MECHANICAL; CATHODIC PROTECTION DETAILS
95	20-M-001	HEADWORKS AREA - OVERALL; 3D VIEWS
96	20-M-101	HEADWORKS AREA - OVERALL; OPERATING LEVEL PLAN
97	20-M-301	HEADWORKS AREA - OVERALL; SECTIONS
98	21-M-101	HEADWORKS AREA - HEADWORKS; PLAN
99	22-M-101	HEADWORKS AREA - FINE SCREENS; PLAN
100	22-M-301	HEADWORKS AREA - FINE SCREENS; SECTIONS AND DETAILS 1
101	23-M-101	HEADWORKS AREA - ODOR CONTROL; PLAN, SECTIONS, AND DETAILS
102	24-M-101	HEADWORKS AREA - VACTOR WASHDOWN AREA; 3D VIEWS
103	24-M-301	HEADWORKS AREA - VACTOR WASHDOWN AREA; PLAN, SECTIONS AND DETAILS
104	30-M-001	TREATMENT AREA - OVERALL; 3D VIEWS
105	30-M-101	TREATMENT AREA - OVERALL; OPERATING LEVEL PLAN
106	30-M-301	TREATMENT AREA - OVERALL; SECTIONS AND DETAILS
107	31-M-101	TREATMENT AREA - BNR BASINS; UPPER LEVEL PLAN
108	31-M-102	TREATMENT AREA - BNR BASINS; MIDDLE LEVEL PLAN
110	31-M-301	TREATMENT AREA - BNR BASINS; SECTIONS AND DETAILS 1
111	32-M-101	TREATMENT AREA - MBR SYSTEM; OPERATING LEVEL PLAN
112	32-M-102	TREATMENT AREA - MBR SYSTEM; LOWER LEVEL PLAN
113	32-M-301	TREATMENT AREA - MBR SYSTEM; SECTIONS
114	33-M-101	TREATMENT AREA - RO FEED TANKS; PLAN, SECTIONS, AND DETAILS
115	34-M-101	TREATMENT AREA - ONSITE RECYCLE PUMPS; PLAN, SECTIONS, AND DETAILS
116	50-M-001	RO/UV BUILDING - OVERALL; 3D VIEWS
117	50-M-101	RO/UV BUILDING - OVERALL; OPERATING LEVEL PLAN
118	50-M-301	RO/UV BUILDING - OVERALL; SECTIONS
119	51-M-101	RO/UV BUILDING - RO SYSTEM; MEMBRANE RACKS PLAN
120	51-M-102	RO/UV BUILDING - RO SYSTEM; CIP & FLUSH SYSTEMS PLAN
121	51-M-301	RO/UV BUILDING - RO SYSTEM; SECTIONS AND DETAILS 1
122	51-M-302	RO/UV BUILDING - RO SYSTEM; SECTIONS AND DETAILS 2
123	52-M-101	RO/UV BUILDING - UV SYSTEM; REACTOR SYSTEM PLAN
124	52-M-301	RO/UV BUILDING - UV SYSTEM; SECTIONS AND DETAILS 1
125	60-M-001	PRODUCT WATER AREA - OVERALL; 3D VIEWS
126	60-M-101	PRODUCT WATER AREA - OVERALL; OPERATING LEVEL PLAN
127	61-M-101	PRODUCT WATER AREA - CALCITE CONTACTOR; PLAN
128	61-M-301	PRODUCT WATER AREA - CALCITE CONTACTOR; SECTIONS AND DETAILS
129	62-M-101	PRODUCT WATER AREA - PRODUCT WATER STORAGE TANK; PLAN, SECTIONS, AND DETAILS
130	63-M-101	PRODUCT WATER AREA - IPR PRODUCT WATER PUMP STATION; PLAN
131	63-M-301	PRODUCT WATER AREA - IPR PRODUCT WATER PUMP STATION; SECTIONS & DETAILS 1
132	64-M-101	PRODUCT WATER AREA - OUTFALL PUMP STATION; PLAN
133	64-M-301	PRODUCT WATER AREA - OUTFALL PUMP STATION; SECTIONS & DETAILS 1
134	65-M-102	PRODUCT WATER AREA - DECHLORINATION FACILITY; PLAN, SECTIONS, AND DETAILS
135	70-M-001	RESIDUALS AREA - OVERALL; 3D VIEWS
136	71-M-101	RESIDUALS AREA - SLUDGE HOLDING AND SAFE SETTLE TANKS; OPERATING LEVEL PLAN
137	71-M-301	RESIDUALS AREA - SLUDGE HOLDING AND SAFE SETTLE TANKS; SECTIONS & DETAILS 1
138	72-M-101	RESIDUALS AREA - DEWATERING FACILITY; PLAN
139	72-M-301	RESIDUALS AREA - DEWATERING FACILITY; SECTIONS & DETAILS 1
140	73-M-101	RESIDUALS AREA - SAFE FILTER SYSTEM; PLAN, SECTIONS, & DETAILS
141	80-M-101	MISCELLANEOUS - GENERATOR; GENERATOR SYSTEM; PLAN, SECTIONS, AND DETAILS
142	90-M-001	CHEMICAL FACILITY - OVERALL; 3D VIEWS
143	90-M-101	CHEMICAL FACILITY - OVERALL; PLAN
144	90-M-301	CHEMICAL FACILITY - OVERALL; SECTIONS AND DETAILS 1

PROCESS AND INSTRUMENTATION

SHEET NO.	DRAWING NO.	DESCRIPTION
145	00-I-001	P&ID - LEGEND AND ABBREVIATIONS - SHEET 1
146	00-I-002	P&ID - LEGEND AND ABBREVIATIONS - SHEET 2
147	00-I-003	P&ID - LEGEND AND ABBREVIATIONS - SHEET 3
148	00-I-501	INSTALLATION DETAILS 1
149	00-I-502	INSTALLATION DETAILS 2
150	00-I-503	INSTALLATION DETAILS 3
151	00-I-504	INSTALLATION DETAILS 4
152	00-I-505	INSTALLATION DETAILS 5
153	00-I-701	OVERALL FIBER OPTIC NETWORK DIAGRAM
154	00-I-702	NETWORK OVERALL DIAGRAM
155	00-I-703	WIRELESS NETWORK DIAGRAM
156	00-I-704	OFFICE NETWORK AND TELEPHONE SYSTEM DIAGRAM
157	00-I-705	SECURITY DIAGRAM
158	21-I-001	HEADWORKS AREA - HEADWORKS; TRAIN 1
159	21-I-002	HEADWORKS AREA - HEADWORKS; TRAIN 2
160	22-I-001	HEADWORKS AREA - FINE SCREENS; SAFE DIVERSION BOX & FINE SCREENS
161	23-I-001	HEADWORKS AREA - ODOR CONTROL; ODOR CONTROL SYSTEM
162	31-I-001	TREATMENT AREA - BNR BASINS; BASIN 1 & RAS DEOX
163	31-I-002	TREATMENT AREA - BNR BASINS; BASIN 2
164	31-I-003	TREATMENT AREA - BNR BASINS; WAS SYSTEM
165	31-I-004	TREATMENT AREA - BNR BASINS; PROCESS AIR BLOWERS
166	32-I-001	TREATMENT AREA - MBR SYSTEM; MEMBRANE BASIN 1
167	32-I-002	TREATMENT AREA - MBR SYSTEM; MEMBRANE BASIN 2
168	32-I-003	TREATMENT AREA - MBR SYSTEM; FILTRATE PUMP, BASIN 1
169	32-I-004	TREATMENT AREA - MBR SYSTEM; FILTRATE PUMP, BASIN 2
170	32-I-005	TREATMENT AREA - MBR SYSTEM; FILTRATE MANIFOLD
171	32-I-006	TREATMENT AREA - MBR SYSTEM; MBR SCOUR AIR BLOWERS
172	32-I-007	TREATMENT AREA - MBR SYSTEM; TANK DRAIN PUMP
173	32-I-008	TREATMENT AREA - MBR SYSTEM; COMPRESSORS
174	33-I-001	TREATMENT AREA - RO FEED TANKS; RO FEED TANKS
175	34-I-001	TREATMENT AREA - PLANT RECYCLED WATER PUMP STATION; PLANT RECYCLED WATER PUMPS
176	51-I-001	RO/UV BUILDING - RO SYSTEM; RO FEED CONDITIONING SYSTEM
177	51-I-002	RO/UV BUILDING - RO SYSTEM; RO CARTRIDGE FILTERS
178	51-I-003	RO/UV BUILDING - RO SYSTEM; RO UNIT 1
179	51-I-004	RO/UV BUILDING - RO SYSTEM; RO UNIT 2
180	51-I-005	RO/UV BUILDING - RO SYSTEM; RO UNIT 3
181	51-I-006	RO/UV BUILDING - RO SYSTEM; RO PERMEATE/CONCENTRATE, UNIT 1
182	51-I-007	RO/UV BUILDING - RO SYSTEM; RO PERMEATE/CONCENTRATE, UNIT 2
183	51-I-008	RO/UV BUILDING - RO SYSTEM; RO PERMEATE/CONCENTRATE, UNIT 3
184	51-I-009	RO/UV BUILDING - RO SYSTEM; RO CIP TANKS
185	51-I-010	RO/UV BUILDING - RO SYSTEM; RO CIP PUMPS
186	51-I-011	RO/UV BUILDING - RO SYSTEM; RO FLUSH SYSTEM
187	52-I-001	RO/UV BUILDING - UV SYSTEM; UV/AOP SYSTEM
188	61-I-001	PRODUCT WATER AREA - CALCITE CONTACTOR; CALCITE REMINERALIZATION SYSTEM
189	62-I-001	PRODUCT WATER AREA - IPR PRODUCT WATER STORAGE TANK; IPR PRODUCT WATER STORAGE TANK
190	63-I-001	PRODUCT WATER AREA - IPR PRODUCT WATER PUMP STATION; IPR PRODUCT WATER PUMPS
191	64-I-001	PRODUCT WATER AREA - OUTFALL PUMP STATION; OUTFALL TANK & PUMPS
192	65-I-001	PRODUCT WATER AREA - DISINFECTION SYSTEM; OUTFALL DISINFECTION SYSTEM
193	71-I-001	RESIDUALS AREA - SLUDGE & SAFE SETTLING TANKS; SLUDGE HOLDING TANKS
194	71-I-002	RESIDUALS AREA - SLUDGE & SAFE SETTLING TANKS; SAFE SETTLE TANK
195	71-I-003	RESIDUALS AREA - SLUDGE & SAFE SETTLING TANKS; SLUDGE HOLDING TANK BLOWERS
196	72-I-001	RESIDUALS AREA - DEWATERING SYSTEM; SLUDGE FEED PUMPS
197	72-I-002	RESIDUALS AREA - DEWATERING SYSTEM; BELT FILTER PRESS
198	73-I-001	RESIDUALS AREA - SAFE FILTER SYSTEM; SAFE SYSTEM
199	81-I-001	MISCELLANEOUS - GENERATOR; GENERATOR SYSTEM
200	81-I-002	MISCELLANEOUS - ELECTRICAL; SWITCHBOARD & MCCS
201	90-I-001	CHEMICALS - CHEMICAL FACILITY; SODIUM HYPOCHLORITE STORAGE & FEED 1
202	90-I-002	CHEMICALS - CHEMICAL FACILITY; SODIUM HYPOCHLORITE STORAGE & FEED 2
203	90-I-003	CHEMICALS - CHEMICAL FACILITY; SODIUM HYDROXIDE STORAGE & FEED
204	90-I-004	CHEMICALS - CHEMICAL FACILITY; SODIUM BISULFITE STORAGE & FEED
205	90-I-005	CHEMICALS - CHEMICAL FACILITY; ANTISCALANT STORAGE & FEED
206	90-I-006	CHEMICALS - CHEMICAL FACILITY; CITRIC ACID STORAGE & FEED
207	90-I-007	CHEMICALS - CHEMICAL FACILITY; SULFURIC ACID STORAGE & FEED
208	90-I-008	CHEMICALS - DEWATERING AREA; THICKENING POLYMER STORAGE & FEED
209	95-I-001	OPERATIONS & CONTROL BUILDING - SANITARY SYSTEM; SANITARY LIFT STATION

NO.	BY	CHK	APP	DATE	REVISIONS AND RECORD OF USE
C	KEZ	RWF	EVB	3/31/2020	90% SUBMITTAL
B	KEZ	RT	EVB	7/30/2019	60% SUBMITTAL
A	KEZ	RWF	EVB	3/5/2019	30% SUBMITTAL

REGISTERED PROFESSIONAL ENGINEER
ERICK V. BEVINCOM
No. C 78836
CIVIL
STATE OF CALIFORNIA

BLACK & VEATCH

JOINT VENTURE

BLACK & VEATCH

FILANC

CITY OF MORRO BAY
MORRO BAY WATER
RECLAMATION FACILITY (WRF)

GENERAL
SHEET LIST 1

DESIGNED: EVB, KEZ
DETAILED: MAK
CHECKED:
APPROVED:
DATE:

0 1/2 1
IF THIS BAR DOES NOT MEASURE 1" THEN DRAWING IS NOT TO FULL SCALE

PROJECT NO.
400530

00-G-002
SHEET
OF

90% SUBMITTAL - NOT FOR CONSTRUCTION

D400530
FD81203_PW

STRUCTURAL

SHEET NO.	DRAWING NO.	DESCRIPTION
210	00-S-001	STRUCTURAL GENERAL NOTES 1
211	00-S-002	STRUCTURAL GENERAL NOTES 2
212	00-S-101	STRUCTURAL DETAILS 1
213	00-S-102	STRUCTURAL DETAILS 2
214	00-S-103	STRUCTURAL DETAILS 3
215	00-S-104	STRUCTURAL DETAILS 4
216	00-S-105	STRUCTURAL DETAILS 5
217	00-S-106	STRUCTURAL DETAILS 6
218	00-S-107	STRUCTURAL DETAILS 7
219	00-S-108	STRUCTURAL DETAILS 8
220	00-S-201	PIPE SUPPORT DETAILS 1
221	00-S-202	PIPE SUPPORT DETAILS 2
222	00-S-203	PIPE SUPPORT DETAILS 3
223	13-S-001	WASH RACK; 3D VIEWS
224	13-S-101	WASH RACK; PLAN
225	13-S-301	WASH RACK; SECTIONS & DETAILS
226	14-S-001	WRF PARKING CANOPY; 3D VIEWS
227	14-S-101	WRF PARKING CANOPY; PLANS
228	14-S-301	WRF PARKING CANOPY; SECTIONS & DETAILS
229	15-S-001	WATER AND COLLECTION VEHICLES EQUIPMENT STORAGE; 3D VIEW
230	15-S-101	WATER AND COLLECTION VEHICLES EQUIPMENT STORAGE; PLAN
231	15-S-301	WATER AND COLLECTION VEHICLES EQUIPMENT STORAGE; SECTIONS & DETAILS
232	16-S-001	WATER AND COLLECTION SUPPLIES STORAGE SHED; 3D VIEW
233	16-S-101	WATER AND COLLECTION SUPPLIES STORAGE SHED; PLAN
234	16-S-301	WATER AND COLLECTION SUPPLIES STORAGE SHED; SECTIONS & DETAILS
235	17-S-101	OUTDOOR STORAGE AREA; 3D VIEW
236	17-S-101	OUTDOOR STORAGE AREA; PLAN
237	17-S-301	OUTDOOR STORAGE AREA; SECTIONS & DETAILS 1
238	20-S-001	HEADWORKS AREA - OVERALL; 3D VIEWS
239	20-S-101	HEADWORKS AREA - OVERALL; PLAN
240	20-S-301	HEADWORKS AREA - OVERALL; SECTIONS & DETAILS 1
241	20-S-302	HEADWORKS AREA - OVERALL; SECTIONS & DETAILS 2
242	24-S-001	HEADWORKS AREA - VACTOR WASHDOWN; 3D VIEW
243	24-S-101	HEADWORKS AREA - VACTOR WASHDOWN; PLAN
244	24-S-301	HEADWORKS AREA - VACTOR WASHDOWN; SECTIONS & DETAILS
245	30-S-001	TREATMENT AREA - OVERALL; 3D VIEWS
246	30-S-101	TREATMENT AREA - OVERALL; OPERATING LEVEL PLAN
247	30-S-102	TREATMENT AREA - OVERALL; LOWER PLAN
248	30-S-301	TREATMENT AREA - OVERALL; SECTIONS & DETAILS 1
249	30-S-302	TREATMENT AREA - OVERALL; SECTIONS & DETAILS 2
250	30-S-303	TREATMENT AREA - OVERALL; SECTIONS & DETAILS 3
251	30-S-304	TREATMENT AREA - OVERALL; SECTIONS & DETAILS 4
252	30-S-305	TREATMENT AREA - OVERALL; SECTIONS & DETAILS 5
253	30-S-306	TREATMENT AREA - OVERALL; SECTIONS & DETAILS 6
254	30-S-307	TREATMENT AREA - OVERALL; SECTIONS & DETAILS 7
255	50-S-001	RO/UV BUILDING - OVERALL; 3D VIEWS
256	50-S-101	RO/UV BUILDING - OVERALL; LOWER PLAN
257	50-S-301	RO/UV BUILDING - OVERALL; SECTIONS & DETAILS 1
258	50-S-302	RO/UV BUILDING - OVERALL; SECTIONS & DETAILS 2
259	50-S-303	RO/UV BUILDING - OVERALL; SECTIONS & DETAILS 3
260	61-S-001	PRODUCT WATER AREA - CALCITE CONTACTOR; 3D VIEWS
261	61-S-101	PRODUCT WATER AREA - CALCITE CONTACTOR; PLAN
262	61-S-301	PRODUCT WATER AREA - CALCITE CONTACTOR; SECTIONS & DETAILS
263	63-S-001	PRODUCT WATER AREA - IPR AND OUTFALL PUMP STATION; 3D VIEW
264	63-S-101	PRODUCT WATER AREA - IPR AND OUTFALL PUMP STATION; PLAN
265	63-S-301	PRODUCT WATER AREA - IPR AND OUTFALL PUMP STATION; SECTIONS & DETAILS
266	71-S-001	RESIDUALS AREA - OVERALL; 3D VIEWS
267	71-S-101	RESIDUALS AREA - SLUDGE HOLDING TANKS & SAFE SETTLE TANK; PLAN
268	71-S-301	RESIDUALS AREA - SLUDGE HOLDING TANKS & SAFE SETTLE TANK; SECTIONS & DETAILS 1
269	71-S-302	RESIDUALS AREA - SLUDGE HOLDING TANKS & SAFE SETTLE TANK; SECTIONS & DETAILS 2
270	71-S-303	RESIDUALS AREA - SLUDGE HOLDING TANKS & SAFE SETTLE TANK; SECTIONS & DETAILS 3
271	72-S-001	RESIDUALS AREA - DEWATERING FACILITY; 3D VIEWS
272	72-S-101	RESIDUALS AREA - DEWATERING FACILITY; PLAN
273	72-S-301	RESIDUALS AREA - DEWATERING FACILITY; SECTIONS & DETAILS 1
274	72-S-302	RESIDUALS AREA - DEWATERING FACILITY; SECTIONS & DETAILS 2
275	73-S-001	RESIDUALS AREA - SAFE FILTER SYSTEM; 3D VIEWS
276	73-S-101	RESIDUALS AREA - SAFE FILTER SYSTEM; PLAN
277	73-S-301	RESIDUALS AREA - SAFE FILTER SYSTEM; SECTIONS & DETAILS
278	80-S-001	ELECTRICAL BUILDING - OVERALL; 3D VIEWS
279	80-S-101	ELECTRICAL BUILDING - OVERALL; PLAN
280	80-S-301	ELECTRICAL BUILDING - OVERALL; SECTIONS & DETAILS 1
281	90-S-001	CHEMICALS - CHEMICAL FACILITY; 3D VIEWS
282	90-S-101	CHEMICALS - CHEMICAL FACILITY; PLAN
283	90-S-301	CHEMICALS - CHEMICAL FACILITY; SECTIONS & DETAILS 1
284	90-S-302	CHEMICALS - CHEMICAL FACILITY; SECTIONS & DETAILS 2
285	90-S-303	CHEMICALS - CHEMICAL FACILITY; SECTIONS & DETAILS 3
286	90-S-304	CHEMICALS - CHEMICAL FACILITY; SECTIONS & DETAILS 4
287	95-S-001	OPERATIONS BUILDING; 3D VIEWS
288	95-S-101	OPERATIONS BUILDING; PLAN
289	95-S-301	OPERATIONS BUILDING; SECTIONS & DETAILS
290	96-S-001	MAINTENANCE BUILDING; 3D VIEWS
291	96-S-101	MAINTENANCE BUILDING; PLAN
292	96-S-301	MAINTENANCE BUILDING; SECTIONS & DETAILS

ARCHITECTURAL

SHEET NO.	DRAWING NO.	DESCRIPTION
293	00-A-001	ARCHITECTURAL DETAILS 1
294	00-A-002	ARCHITECTURAL DETAILS 2
295	00-A-003	ARCHITECTURAL DETAILS 3
296	00-A-004	ARCHITECTURAL DETAILS 4
297	00-A-005	ARCHITECTURAL DETAILS 5
298	00-A-006	ARCHITECTURAL DETAILS 6
299	00-A-007	ARCHITECTURAL DETAILS 7
300	14-A-001	WRF PARKING CANOPY; PERSPECTIVES
301	14-A-101	WRF PARKING CANOPY; PLAN
302	14-A-201	WRF PARKING CANOPY; SECTIONS & DETAILS
303	15-A-001	WRF WATER AND COLLECTION VEHICLES EQUIPMENT; PERSPECTIVES
304	15-A-101	WRF WATER AND COLLECTION VEHICLES EQUIPMENT; PLAN
305	15-A-201	WRF WATER AND COLLECTION VEHICLES EQUIPMENT; SECTIONS & DETAILS
306	16-A-001	WATER AND COLLECTION SUPPLIES STORAGE SHED; PERSPECTIVES
307	16-A-101	WATER AND COLLECTION SUPPLIES STORAGE SHED; LIFE SAFETY PLAN
308	16-A-102	WATER AND COLLECTION SUPPLIES STORAGE SHED; OPERATING FLOOR PLAN
309	16-A-201	WATER AND COLLECTION SUPPLIES STORAGE SHED; BUILDING ELEVATIONS
310	16-A-301	WATER AND COLLECTION SUPPLIES STORAGE SHED; WALL SECTIONS
326	72-A-101	RESIDUALS AREA - DEWATERING FACILITY; OPERATING FLOOR PLAN
327	72-A-201	RESIDUALS AREA - DEWATERING FACILITY; BUILDING ELEVATIONS
328	72-A-202	RESIDUALS AREA - DEWATERING FACILITY; BUILDING ELEVATIONS
329	80-A-001	ELECTRICAL BUILDING; PERSPECTIVES
330	80-A-101	ELECTRICAL BUILDING; LIFE SAFETY PLAN
331	80-A-102	ELECTRICAL BUILDING; OPERATING FLOOR PLAN
332	80-A-201	ELECTRICAL BUILDING; BUILDING ELEVATIONS
333	80-A-301	ELECTRICAL BUILDING; BUILDING SECTIONS
334	80-A-601	ELECTRICAL BUILDING; SCHEDULES
335	90-A-001	CHEMICALS - CHEMICAL FACILITY; PERSPECTIVES
336	90-A-101	CHEMICALS - CHEMICAL FACILITY; OPERATING FLOOR PLAN
337	90-A-201	CHEMICALS - CHEMICAL FACILITY; BUILDING ELEVATIONS
338	90-A-202	CHEMICALS - CHEMICAL FACILITY; BUILDING ELEVATIONS
339	95-A-001	OPERATIONS BUILDING; PERSPECTIVES
340	95-A-101	OPERATIONS BUILDING; LIFE SAFETY PLAN
341	95-A-102	OPERATIONS BUILDING; OPERATING FLOOR PLAN
342	95-A-103	OPERATIONS BUILDING; ROOF PLAN
343	95-A-104	OPERATIONS BUILDING; REFLECTED CEILING PLAN
344	95-A-201	OPERATIONS BUILDING; BUILDING ELEVATIONS 1
345	95-A-202	OPERATIONS BUILDING; BUILDING ELEVATIONS 2
346	95-A-301	OPERATIONS BUILDING; WALL SECTIONS 1
347	95-A-302	OPERATIONS BUILDING; WALL SECTIONS 2
348	95-A-303	OPERATIONS BUILDING; WALL SECTIONS 3
349	95-A-401	OPERATIONS BUILDING; ENLARGED OPERATING FLOOR PLAN - EAST
350	95-A-402	OPERATIONS BUILDING; ENLARGED OPERATING FLOOR PLAN - WEST
351	95-A-403	OPERATIONS BUILDING; ENLARGED RESTROOM PLANS
352	95-A-404	OPERATIONS BUILDING; RESTROOM AND LOCKER ROOM ELEVATIONS 1
353	95-A-405	OPERATIONS BUILDING; RESTROOM AND LOCKER ROOM ELEVATIONS 2
354	95-A-406	OPERATIONS BUILDING; ENLARGED CASEWORK PLANS AND ELEVATIONS 1
355	95-A-407	OPERATIONS BUILDING; ENLARGED CASEWORK PLANS AND ELEVATIONS 2
356	95-A-408	OPERATIONS BUILDING; ENLARGED CASEWORK PLANS AND ELEVATIONS 3
357	95-A-601	OPERATIONS BUILDING; SCHEDULES
358	96-A-001	MAINTENANCE BUILDING; PERSPECTIVES
359	96-A-101	MAINTENANCE BUILDING; LIFE SAFETY PLAN
360	96-A-102	MAINTENANCE BUILDING; OPERATING FLOOR PLAN
361	96-A-103	MAINTENANCE BUILDING; CLERESTORY PLANS
362	96-A-104	MAINTENANCE BUILDING; ROOF PLANS
363	96-A-105	MAINTENANCE BUILDING; REFLECTED CEILING PLAN
364	96-A-201	MAINTENANCE BUILDING; ELEVATIONS 1
365	96-A-202	MAINTENANCE BUILDING; ELEVATIONS 2
366	96-A-301	MAINTENANCE BUILDING; WALL SECTIONS 1
367	96-A-302	MAINTENANCE BUILDING; WALL SECTIONS 2
368	96-A-401	MAINTENANCE BUILDING; INTERMEDIATE FLOOR PLAN
369	96-A-402	MAINTENANCE BUILDING; ENLARGED PLANS
370	96-A-403	MAINTENANCE BUILDING; ENLARGED PLANS
371	96-A-404	MAINTENANCE BUILDING; ENLARGED PLANS
372	96-A-405	MAINTENANCE BUILDING; ENLARGED PLANS
370	96-A-601	MAINTENANCE BUILDING; SCHEDULES

PLUMBING

SHEET NO.	DRAWING NO.	DESCRIPTION
371	00-P-001	PLUMBING LEGEND, ABBREVIATIONS, AND GENERAL NOTES
372	00-P-501	PLUMBING; DETAILS
373	00-P-601	PLUMBING SCHEDULES
374	16-P-101	WATER AND COLLECTION SUPPLIES STORAGE SHED; PLAN AND RISER ISOMETRICS
375	50-P-101	RO/UV BUILDING; PLAN AND ENLARGED ISOMETRIC
376	50-P-701	RO/UV BUILDING; RISER ISOMETRICS
377	72-P-101	RESIDUALS AREA; DEWATERING FACILITY; PLAN AND RISER ISOMETRICS
378	90-P-101	CHEMICAL FACILITY; PLAN AND RISER ISOMETRIC
379	95-P-101	OPERATIONS BUILDING; OVERALL OPERATING FLOOR PLAN
380	95-P-401	OPERATIONS BUILDING; ENLARGED OPERATING FLOOR PLAN - WEST
381	95-P-402	OPERATIONS BUILDING; ENLARGED OPERATING FLOOR PLAN - EAST
382	95-P-701	OPERATIONS BUILDING; RISER ISOMETRICS 1
383	95-P-702	OPERATIONS BUILDING; RISER ISOMETRICS 2
384	96-P-101	MAINTENANCE BUILDING; PLAN
385	96-P-701	MAINTENANCE BUILDING; RISER ISOMETRICS

HVAC

SHEET NO.	DRAWING NO.	DESCRIPTION
386	00-H-001	HVAC LEGEND, ABBREVIATIONS, AND GENERAL NOTES
387	00-H-501	HVAC; DETAILS
388	00-H-601	HVAC; SCHEDULES
389	00-H-602	HVAC; SEQUENCE OF OPERATIONS
390	00-H-603	HVAC; TITLE 24 - COMPLIANCE FORM
391	00-H-604	HVAC; TITLE 24 - COMPLIANCE FORM
392	00-H-605	HVAC; TITLE 24 - COMPLIANCE FORM
393	00-H-701	HVAC; SCHEMATICS
394	50-H-101	RO/UV BUILDING; PLAN
395	80-H-101	ELECTRICAL BUILDING; PLAN
396	95-H-101	OPERATIONS BUILDING; OVERALL OPERATING FLOOR PLAN
397	95-H-401	OPERATIONS BUILDING; ENLARGED OPERATING FLOOR PLAN - WEST
398	95-H-402	OPERATIONS BUILDING; ENLARGED OPERATING FLOOR PLAN - EAST
399	96-H-101	MAINTENANCE BUILDING; PLAN

FIRE PROTECTION

SHEET NO.	DRAWING NO.	DESCRIPTION
400	95-F-001	OPERATIONS BUILDING - FIRE SUPPRESSION SYSTEM; SCHEMATIC
401	95-F-101	OPERATIONS BUILDING - FIRE SUPPRESSION SYSTEM; PLAN
402	96-F-001	MAINTENANCE BUILDING - FIRE SUPPRESSION SYSTEM; SCHEMATIC
403	96-F-101	MAINTENANCE BUILDING - FIRE SUPPRESSION SYSTEM; PLAN

ELECTRICAL

SHEET NO.	DRAWING NO.	DESCRIPTION
404	00-E-001	GENERAL; LEGENDS
405	00-E-002	GENERAL; ABBREVIATIONS AND GENERAL NOTES
406	00-E-501	GENERAL; INSTALLATION DETAILS SHEET 1 OF 4
407	00-E-502	GENERAL; INSTALLATION DETAILS SHEET 2 OF 4
408	00-E-503	GENERAL; INSTALLATION DETAILS SHEET 3 OF 4
409	00-E-504	GENERAL; INSTALLATION DETAILS SHEET 4 OF 4
411	10-E-100	SITE - OVERALL POWER PLAN
412	10-E-111	SITE - OVERALL LIGHTING PLAN
413	10-E-601	SITE - OVERALL DUCTBANK SCHEDULE SHEET 1 OF 2
414	10-E-602	SITE - OVERALL DUCTBANK SCHEDULE SHEET 2 OF 2
416	21-E-101	HEADWORKS AREA POWER AND GROUNDING PLAN
417	21-E-711	HEADWORKS AREA 21-CTRL-LCP-0001 ONE-LINE DIAGRAM
418	31-E-101	TREATMENT AREA - BNR BASINS POWER AND GROUNDING PLAN
419	31-E-711	TREATMENT AREA 31-CTRL-LCP-0001 ONE-LINE DIGRAM SHEET 1 OF 2
420	31-E-712	TREATMENT AREA 31-CTRL-LCP-0001 ONE-LINE DIAGRAM SHEET 2 OF 2
421	32-E-711	TREATMENT AREA 32-MBR-LCP-0001 ONE-LINE DIAGRAM
422	32-E-101	TREATMENT AREA - MBR SYSTEM POWER AND GROUNDING PLAN
423	33-E-101	TREATMENT AREA - RO FEED TANKS POWER AND GROUNDING PLAN
424	34-E-101	TREATMENT AREA - RECYCLED WATER PUMPS POWER AND GROUNDING PLAN
425	50-E-601	RO/UV BUILDING POWER PANELS SCHEDULE
426	50-E-701	RO/UV BUILDING 50-ELEC-MCC-0001 ONE-LINE DIGRAM SHEET 1 OF 2
427	50-E-702	RO/UV BUILDING 50-ELEC-MCC-0001 ONE-LINE DIGRAM SHEET 2 OF 2
428	50-E-711	RO/UV BUILDING 51-CTRL-LCP-0001 ONE-LINE DIGRAM
429	50-E-712	RO/UV BUILDING 51-RO-LCP-0001 AND MISCELLANEOUS ONE-LINE DIGRAM
430	50-E-721	RO/UV BUILDING SCHEMATICS
431	51-E-101	RO/UV BUILDING - RO SYSTEM POWER AND GROUNDING PLAN
432	51-E-102	RO/UV BUILDING - RO CIP & FLUSH SYSTEMS POWER AND GROUNDING PLAN
433	51-E-103	RO/UV BUILDING - ELECTRICAL ROOM POWER AND GROUNDING PLAN
434	52-E-101	RO/UV BUILDING - UV SYSTEM POWER AND GROUNDING PLAN
435	61-E-101	PRODUCT WATER AREA - CALCITE CONTACTOR POWER AND GROUNDING PLAN
436	62-E-101	PRODUCT WATER AREA -PRODUCT WATER STORAGE TANK POWER AND GROUNDING PLAN
437	63-E-101	PRODUCT WATER AREA - IPR PRODUCT WATER PUMP STATION POWER AND GROUNDING PLAN
438	64-E-101	PRODUCT WATER AREA - OUTFALL PUMPS STATION POWER AND GROUNDING PLAN
439	71-E-101	RESIDUALS AREA - SLUDGE HOLDING TANKS & SAFE SETTLE TANK AREA POWER AND GROUNDING PLAN
440	72-E-101	RESIDUALS AREA - DEWATERING FACILITY POWER AND GROUNDING PLAN
441	72-E-701	RESIDUALS AREA 72-CTRL-LCP-0001 ONE-LINE DIGRAM
442	73-E-101	RESIDUALS AREA - SAFE FILTER SYSTEM POWER AND GROUNDING PLAN
443	80-E-101	ELECTRICAL BUILDING POWER AND GROUNDING PLAN
444	80-E-601	ELECTRICAL BUILDING POWER PANELS SCHEDULE
445	80-E-701	ELECTRICAL BUILDING 80-ELEC-SWB-0001 ONE-LINE DIAGRAM
446	80-E-702	ELECTRICAL BUILDING 80-ELEC-MCC-0001 ONE-LINE DIAGRAM
447	80-E-703	ELECTRICAL BUILDING 80-ELEC-MCC-0002 ONE-LINE DIAGRAM SHEET 1 OF 2
448	80-E-704	ELECTRICAL BUILDING 80-ELEC-MCC-0002 ONE-LINE DIAGRAM SHEET 2 OF 2
449	80-E-711	ELECTRICAL BUILDING 80-CTRL-LCP-0001 ONE-LINE DIAGRAM
450	80-E-721	ELECTRICAL BUILDING SCHEMATICS
451	90-E-101	CHEMICAL FACILITY POWER AND GROUNDING PLAN
452	90-E-711	CHEMICAL FACILITY 90-CTRL-LCP-0001 ONE-LINE DIAGRAM
453	95-E-101	OPERATIONS BUILDING POWER AND GROUNDING
454	95-E-111	OPERATIONS BUILDING LIGHTING PLAN
455	95-E-601	OPERATIONS BUILDING POWER PANELS SCHEDULE
456	96-E-101	MAINTENANCE BUILDING POWER AND GROUNDING PLAN
457	96-E-111	MAINTENANCE BUILDING LIGHTING PLAN
458	96-E-601	MAINTENANCE BUILDING POWER PANELS SCHEDULE

90% SUBMITTAL - NOT FOR CONSTRUCTION

NO.	BY	CHK	APP	DATE	REVISIONS AND RECORD OF USE
C	KEZ	RWF	EVB	3/31/2020	90% SUBMITTAL
B	KEZ	RT	EVB	7/30/2019	60% SUBMITTAL
A	KEZ	RWF	EVB	3/5/2019	30% SUBMITTAL

REGISTERED PROFESSIONAL ENGINEER
ERICK V. BEVINCION
No. C 78836
CIVIL
STATE OF CALIFORNIA

BLACK & VEATCH
JOINT VENTURE
BLACK & VEATCH
FILANC

CITY OF MORRO BAY
MORRO BAY WATER
RECLAMATION FACILITY (WRF)

GENERAL
SHEET LIST 2

DESIGNED: EVB, KEZ
DETAILED: MAK
CHECKED:
APPROVED:
DATE:

0 1/2 1
IF THIS BAR DOES NOT MEASURE 1" THEN DRAWING IS NOT TO FULL SCALE

PROJECT NO.
400530

00-G-003
SHEET
OF

D400530
FD81202_PW

A	ACID, AMBER INDICATING LIGHT,AMP
AA	AIR-AERATION
AC	ALTERNATING CURRENT
AER	AERATION SYSTEM
AIR	PROCESS AIR
ALT	ALTERNATE, (IVE)
ALUM	ALUMINUM
AM	AMMETER
AMP	AMPERE
ANTI	ANTISCALANT
AS	AMMETER SWITCH
ATS	AUTOMATIC TRANSFER SWITCH
AUTO	AUTOMATIC
AWG	AMERICAN WIRE GAUGE
AWS	AERATED WAS
BLDG	BUILDING
BNR	BNR
C/L	CENTERLINE
CA	CITRIC ACID
CAKE	DEWATERED CAKE SLUDGE
CAL	CALCITE
CHANNEL	PROCESS CHANNEL
CIP	CAST IN PLACE
CIP	CAST IRON PIPE
CIPR	REVERSE OSMOSIS CIP RETURN
CIPS	REVERSE OSMOSIS CIP SUPPLY
CLR	CLEAR, (ANCE)
CMU	CONCRETE MASONRY UNIT
COMB	COMBINATION
CONC	CONCRETE
CONST	CONSTRUCTION
CONT	CONTINUOUS, CONTINUATION, CONTROL
CP	CONTROL PANEL
CS	CONTROL SWITCH, CONTROL STATION, CUP SINK
CSK	COUNTERSUNK, (INK)
CT	CERAMIC TILE, CYCLE TIMER
CT	CURRENT TRANSFORMER
CU	CUBIC
CU YD	CUBIC YARD
CW	COLD, WATER
D	DRAIN
DC	DIRECT CURRENT
DEPT	DEPARTMENT
DIA	DIAMETER
DIFF	DIFFUSER
DIM	DIMENSION
DIP	DUCTILE IRON PIPE
DIV	DIVISION
DMJ	DOUBLE MECHANICAL JOINT
DO	DISSOLVED OXYGEN
DR	DRAIN
DRN	DRAIN
DS	DOWNSPOUT
DV	DRAIN VALVE
DWG(S)	DRAWING(S)
DWL(S)	DOWEL(S)
DWT	DEWATERING
E	EAST, ELECTRICAL
EA	EACH
ECC	ECCENTRIC
EF	EACH FACE
EFF	EFFLUENT
EL	ELEVATION
ELEC	ELECTRIC, (AL)
ELEV	ELEVATION
EMER	EMERGENCY
EQ	EQUAL
EQUIP	EQUIPMENT
EW	EACH WAY
EXIST	EXISTING
EXP	EXPANSION, EXPOSED
EXP JT	EXPANSION JOINT
EXT	EXTENSION, EXTERIOR, EXTERNAL
F	FIRE PROTECTION WATER SYSTEM
FA	FOUL AIR
FBW	FILTER BACKWASH
FC	FLEXIBLE CONNECTION, FLOW CONTROL
FD	FLOOR DRAIN
FDN	FOUNDATION
FE	FIRE EXTINGUISHER
FEC	FIRE EXTINGUISHER CABINET
FF	REVERSE OSMOSIS FORWARD FLUSH
FH	FLAT HEAD, FIRE HYDRANT
FIG	FIGURE
FIW	FILTER INLET WASH
FL	FLOOR, FLOW LINE
FLEX	FLEXIBLE
FM	FORCE MAIN
FO	FUEL OIL
FOW	FILTERED OUTLET WATER
FPW	FIRE PROTECTION WATER
FRP	FIBERGLASS REINFORCED PLASTIC
FS	FAR SIDE, FLOOR SLEEVE, FLOAT SWITCH
FSCM	FILTER SCUM
FSW	FILTER SOLIDS WASTE
FT	FOOT
FTG	FOOTING
FUE	DIESEL FUEL
FURN	FURNISH, FURNISHED
FWD	FORWARD
G	GAS
GA	GAUGE
GAL	GALLON
GEN	GENERATOR FUEL
GEN	GENERAL, GENERATOR
GPM	GALLONS PER MINUTE
GRT	GRIT
GWB	GYPSUM WALLBOARD
GYP	GYPSUM
H	HIGH, HOUR, HYDROGEN
HDR	HEADER
HE	HEAT EXCHANGER
HEX	HEXAGONAL
HGT	HEIGHT
HH	HANDHOLE
HORIZ	HORIZONTAL
HP	HIGH POINT, HORSEPOWER
HR	HOUR, HANDRAIL
HS	HIGH STRENGTH
HSO4	SULFURIC ACID
HV	HOSE VALVE
HVAC	HEATING,VENTILATING AND AIR CONDITIONING
HW	HOT WATER

I	INDICATOR
IA	INSTRUMENT AIR
IF	INSIDE FACE
IN	INCHES
INC	INCORPORATED
INV	INVERT
IPR	INDIRECT POTABLE REUSE WATER
JB	JUNCTION BOX
IPS	IRON PIPE SIZE
JT	JOINT
K	KIPS
KV	KILOVOLT
KVA	KILOVOLT AMPERE
KW	KILOWATT
KWH	KILOWATT HOUR
L	LOUVER
LAB	LABORATORY
LAT	LEAVING AIR TEMPERATURE
LAT	LATERAL
LB(S)	POUNDS
LG	LENGTH, LONG
LO	LOUVER OPENING
LS	LEVEL SWITCH
LT	LEFT, LAB TABLE
MA	MILLIAMPERE
MAX	MAXIMUM
MCC	MOTOR CONTROL CENTER
MECH	MECHANICAL
MEM	MEMBRANE
MFF	MICROFILTRATION FILTRATE
MFR(S)	MANUFACTURER(S)
MG	MILLION GALLONS
MGD	MILLION GALLONS PER DAY
MH	MANHOLE
MIN	MINIMUM, MINUTE
MISC	MISCELLANEOUS
MJ	MECHANICAL JOINT
ML	MIXED LIQUOR
MP	METERING PUMP
MS	MACHINE SCREW
MSL	MEAN SEA LEVEL
MTD	MOUNTED
MTL	MATERIAL
N	NORTH
N/A	NOT APPLICABLE
N.O.	NORMALLY OPEN
NACL	SODIUM HYPOCHLORITE
NAOH	SODIUM HYDROXIDE
NC	NORMALLY CLOSED
NEUT	NEUTRAL
NF	NEAR FACE
NHS	SODIUM BISULFATE
NO.(S)	NUMBER(S)
NOCL	SODIUM HYPOCHLORITE
NPW	NONPOTABLE WATER
NS	NEAR SIDE
NTS	NOT TO SCALE
OC	ON CENTER, ODOR CONTROL
OD	OUTSIDE DIAMETER
OF	OUTSIDE FACE, OVERFLOW
OH	OVERHEAD
OL	OVERLOAD
OPER	OPERATING
OZ	OUNCE
PC	POINT OF CURVE
PCC	POINT OF COMPOUND CURVATURE
PCR	REVERSE OSMOSIS PERMRATE
PD	PLAN DIMENSION, SUMP PUMP DISCHARGE
PE	PLAIN END
PG	PRESSURE GAUGE
PI	POINT OF INTERSECTION
PL	PLATE
PLYWD	PLYWOOD
POLE	POLYMER
POLY	POLYMER
POW	PLANT OUTFALL WATER
PP	POWER POLE
PR	PAIR
PROJ	PROJECTION
PRS	PRESSURE REDUCING STATION
PRV	POWER ROOF VENTILATOR
PRW	PLANT RECYCLED WATER
PS	PIPE SUPPORT
PSF	POUNDS PER SQUARE FOOT
PSI	POUNDS PER SQUARE INCH
PSW	PLANT SERVICE WATER
PT	POINT, POINT OF TANGENCY
PVC	POLYVINYL CHLORIDE, POINT ON VERTICAL CURVE
PVCP	POLYVINYL CHLORIDE PIPE
PVMT	PAVEMENT
PW	POTABLE WATER
R	RADIUS, RISER
R / W	RIGHT OF WAY
RAS	RETURN ACTIVATED SLUDGE
RCW	RECLAIMED WATER
RECIRC	RECIRCULATING
RED	REDUCER, REDUCING
REINF	REINFORCING
REQD	REQUIRED
REV	REVERSED
RM	ROOM
RO	REVERSE OSMOSIS, ROUGH OPENING
ROC	REVERSE OSMOSIS CONCENTRATE
ROF	REVERSE OSMOSIS FEED
ROP	REVERSE OSMOSIS PERMEATE
RPM	REVOLUTIONS PER MINUTE
RS	RAW SLUDGE, RAW SEWAGE, ROLLED STEEL
RT	RIGHT

S	SOUTH, SPEAKER
SA	SULFURIC ACID
SAN	SANITARY SEWER
SCM	SCUM
SCR	SCREENINGS
SEC	SECOND
SECT	SECTION
SH	SHEET
SIM	SIMILAR
SP	SUMP PUMP
SPEC(S)	SPECIFICATION(S)
SQ	SQUARE
SS	SANITARY SEWER, STAINLESS STEEL
ST	STORM DRAIN
STD	STANDARD
STL	STEEL
STR	STRUCTURAL
SV	SHUTOFF VALVE
SYS	SYSTEM
T	THERMOSTAT, TREAD, TOTALIZER
T	TRANSFORMER, TOP
T&B	TOP AND BOTTOM
TEMP	TEMPERATURE, TEMPORARY
THK	THICK (NESS)
TI	TOTALIZING INDICATOR, TEMPERATURE INDICATOR
TP	TWISTED PAIR COUPLE, TOWEL PIN
TS	TEMPERATURE SWITCH
TW	TREATED WATER, TEMPERED OR BLENDED WATER
TYP	TYPICAL
UH	UNIT HEATER
UNO	UNLESS NOTED OTHERWISE
UV	ULTRAVIOLET
UVE	ULTRAVIOLET TREATMENT EFFLUENT
V	VALVE, VOLT, VENT
VAC	VACUUM
VBF	VALVE, AWWA BUTTERFLY
VBI	VALVE, INDUSTRIAL BUTTERFLY
VBL	VALVE, BALL
VBM	VALVE, BALL MISCELLANEOUS
VC	VERTICAL CURVE, VICTAULIC COUPLING
VERT	VERTICAL
W	WEST, WIDE, WINDOW, WATT, WATER
W/	WITH
W/O	WITHOUT
WAS	WASTE ACTIVATED SLUDGE
WB	WALLBOARD
WC	WATER CLOSET
WD	WOOD, WIDTH
WH	WALL HYDRANT
WL	WATER LEVEL
WM	WATER METER, WATTMETER
WS	WATERSTOP
WT	WEIGHT
WW	WETWELL
WWF	WELDED WIRE FABRIC
WWR	WASTEWATER-RAW
WWS	WASTEWATER-SCREENED
x	BY,TIMES
YH	YARD HYDRANT
#	NUMBER
%	PERCENT
&	AND
@	AT
<	DEFLECTION ANGLE

NO.	BY	CHK	APP	DATE	REVISIONS AND RECORD OF USE
C	KEZ	RWF	EVB	3/31/2020	90% SUBMITTAL
B	KEZ	RT	EVB	7/30/2019	60% SUBMITTAL
A	KEZ	RWF	EVB	3/5/2019	30% SUBMITTAL

REGISTERED PROFESSIONAL ENGINEER
ERICK V. BEVINCION
No. C 78836
CIVIL
STATE OF CALIFORNIA

BLACK & VEATCH

JOINT VENTURE

BLACK & VEATCH

FILANC

CITY OF MORRO BAY
MORRO BAY WATER
RECLAMATION FACILITY (WRF)

GENERAL
ABBREVIATIONS

DESIGNED: EVB, KEZ
DETAILED: MAK
CHECKED:
APPROVED:
DATE:

0 1/2 1
IF THIS BAR DOES NOT MEASURE 1" THEN DRAWING IS NOT TO FULL SCALE

PROJECT NO.
400530

00-G-004
SHEET
OF

90% SUBMITTAL - NOT FOR CONSTRUCTION

D400530
FD81203_PW

GENERAL LEGEND

- SURFACED STREET, ROAD OR DRIVE
- SURFACED STREET, ROAD OR DRIVE WITH CURBS
- NON-SURFACED STREET, ROAD OR DRIVE
- CONCRETE WALK
- CB — CATCH BASIN
- MANHOLE
- DRAINAGE COURSE OR FLOW LINE
- 326 — EXISTING GROUND CONTOUR
- 326 — FINISH GRADE CONTOUR
- BANK OR SLOPE LINES
- #3 OR T.H.#3 B3 — TEST HOLE AND NUMBER
- SURVEY LINE WITH PI, PT, OR POT
- CONCRETE ENCASEMENT-PLAN
- CONCRETE REACTION BLOCKING AT BEND, PLUG OR TEE
- DRAINS OR CULVERTS
- TUNNEL CASING - PLAN
- SMALLER THAN 24" / 24" AND LARGER — EXISTING GENERAL LAYOUT YARD PIPING
- SMALLER THAN 24" / 24" AND LARGER — NEW
- NEW WATER LINE OR SEWER IN PROFILE
- NON-CONNECTING PIPING
- CE/L — CONSTRUCTION EASEMENT LINE
- E/L — EASEMENT LINE
- R/W — RIGHT-OF-WAY LINE
- P — PROPERTY LINE
- PE/L — PERMANENT EASEMENT LINE
- TE/L — TEMPORARY EASEMENT LINE
- UE/L — UTILITY EASEMENT LINE
- S/L — SURVEY LINE / SECTION LINE
- W — WATER LINE
- G — GAS LINE
- T — TELEPHONE (UNDERGROUND)
- E — ELECTRICAL (UNDERGROUND)
- P — T — POWER OR TELEPHONE LINES (OVERHEAD)
- (G) (W) — WATER OR GAS VALVE
- (WM) (GM) — WATER OR GAS METER
- TELEPHONE OR POWER POLE WITH GUY ANCHOR
- FIRE HYDRANT
- Y — YARD HYDRANT
- STREET LIGHT POLE
- TRAFFIC SIGNAL
- TRAFFIC SIGN
- S — STOPSIGN
- HEDGE, BRUSH, SHRUBS, WOODS
- 10" — DECIDUOUS TREE AND TRUNK DIAMETER
- 4" — CONIFEROUS TREE AND TRUNK DIAMETER
- SWAMP

- BUILDINGS, STRUCTURES
- STRUCTURES UNDERGROUND
- FUTURE BUILDINGS, STRUCTURES
- CLOTHES LINE
- SWING SET
- FENCE
- FENCE, WOOD
- RAILROAD, EACH TRACK
- CENTERLINE
- 1 / AC45 — SECTION NUMBER OR DETAIL LETTER; DRAWING NUMBER ON WHICH SECTION OR DETAIL APPEARS; OR WHERE SECTION IS CUT OR DETAIL IS NOTED
- DOOR, WINDOW AND LOUVER SCHEDULE REFERENCE
- 1 / A045 — WALL ELEVATION
- D — ABBREVIATION
- 4 — SCHEDULE NUMBER
- F102 — ROOM NUMBER; AREA DESIGNATION
- PV 10 — EQUIPMENT OR VALVE IDENTIFICATION CODE; EQUIPMENT NUMBER
- PV-10 — EQUIPMENT OR VALVE IDENTIFICATION CODE; EQUIPMENT NUMBER
- EQUIP CALLOUT — EQUIPMENT REPRESENTATION WITH CALLOUT
- EXISTING FACILITY TO BE DEMOLISHED OR REMOVED

MATERIALS LEGEND

- EARTH OR GRADE
- GRANULAR FILL (CRUSHED ROCK OR GRAVEL)
- ROCK
- NEW CONCRETE
- EXISTING CONCRETE, PRECAST OR PRESTRESSED CONCRETE
- BRICK, FACE
- BRICK, COMMON
- CONCRETE MASONRY UNITS (CMU)
- CUT STONE OR SAND FILL, GROUT, MORTAR, AND PLASTER
- WOOD, SHEATHING, PANELING, DECKING, ETC.
- WOOD, STUDS, BEAMS, JOISTS, ETC.
- RIPRAP
- CHECKERED PLATE
- STEEL (FOR 1"SCALE & LARGER)
- STEEL OR ALUMINUM (FOR 3/4" SCALE & SMALLER)
- BAR GRATING (LINES IN DIRECTION OF SPAN)
- ALUMINUM
- INSULATION (BATT)
- INSULATION (RIGID)

PIPING SYSTEMS

- NEW PIPING
- UNDERGROUND PIPING
- EXISTING PIPING
- FUTURE PIPING

PIPING ACCESSORIES LEGEND

- BLIND FLANGE
- CAP OR PLUG
- CO — CLEANOUT
- CROSS
- DIAPHRAGM SEAL
- ELBOW
- ELBOW DOWN
- ELBOW TURNING UP
- SIZE — HOSE CONNECTION
- Q — QUICK COUPLING
- REDUCER
- RUPTURE DISK
- TEE
- TEE LINE DOWN
- TEE LINE UP
- WYE
- S — WYE STRAINER
- S — WYE STRAINER WITH BLOWOFF
- DRAIN OR BELL-UP
- CALIBRATING COLUMN
- TRAP
- UNION
- WALL SLEEVE
- AT — AUTOMATIC DRAIN TRAP
- DT — DRIP TRAP
- S S — DUPLEX STRAINER
- EXPANSION COMPENSATOR
- F — INLINE FILTER
- FLEXIBLE HOSE OR TUBING
- FLEXIBLE CONNECTOR
- HOSE REEL
- INJECTOR, EDUCTOR, BLENDER
- ORIFICE PLATE
- PIPE GUIDE
- S — SEDIMENT TRAP
- S — STRAINER
- SUCTION DIFFUSER
- PIPE DIFFUSER
- SURGE CHAMBER
- VENT - SCREENED
- VENT
- P — PRESSURE GAUGE W/SNUBBER
- T — TEMPERATURE INDICATOR
- THERMOMETER
- ELECTROMAGNETIC/ULTRASONIC FLOWMETER
- ROTAMETER
- TURBINE OR PROPELLOR FLOWMETER
- M — SET STOP METER
- VENTURI
- FM — FLOW METER

MISCELLANEOUS EQUIPMENT

- STATIC MIXER
- VERTICAL MIXER
- SIGHT GLASS
- CENTRIFUGE
- CHANNEL DIFFUSER
- COMPRESSOR OR BLOWER
- PIPE ANCHOR
- PUMP
- SLUICE GATE
- SLIDE GATE
- STOP PLATE
- BAR SCREEN
- EXPANSION TANK
- SCREW (LIFT) PUMP
- FLUME
- WEIR

VALVE LEGEND

- PINCH VALVE
- PLUG VALVE, ECCENTRIC
- PLUG VALVE, NON-ECCENTRIC
- BUTTERFLY VALVE
- GATE VALVE
- BALL VALVE
- GLOBE VALVE
- CHECK VALVE
- 3 WAY VALVE
- 4 WAY VALVE
- ANGLE VALVE
- CHLORINE INSTITUTE VALVE
- DIAPHRAGM VALVE
- THROTTLING VALVE
- FLAME ARRESTER OR CHECK
- BACKWATER VALVE
- INLINE PRESSURE RELIEF VALVE
- PRESSURE REGULATING VALVE
- PRESSURE SUSTAINING OR MAINTAINING VALVE
- VACUUM BREAKER
- THERMAL SHUTOFF VALVE
- EXPLOSION RELIEF VALVE
- HOSE FAUCET
- HOSE FAUCET W/VACUUM BREAKER
- HOSE VALVE W/HOSE NIPPLE
- BACKFLOW PREVENTER
- SAFETY RELIEF VALVE
- V — VACUUM RELIEF CHECK VALVE
- PRESSURE VACUUM RELIEF VALVE

ACTUATOR LEGEND

- E — ELECTRIC
- FLOAT
- DIAPHRAGM
- P/O — AIR/OIL TANDEM
- S — SOLENOID
- A — AIR

NOTE :
SYMBOLS ON THIS SHEET WHICH ARE TO BE SHOWN AS EXISTING SHALL BE DELINEATED AS SCREENED
THOSE SYMBOLS WHICH ARE TO BE SHOWN AS NEW SHALL BE DELINEATED AS SOLID (HEAVY)

90% SUBMITTAL - NOT FOR CONSTRUCTION

NO.	BY	CHK	APP	DATE	REVISIONS AND RECORD OF USE
C	KEZ	RWF	EVB	3/31/2020	90% SUBMITTAL
B	KEZ	RT	EVB	7/30/2019	60% SUBMITTAL
A	KEZ	RWF	EVB	3/5/2019	30% SUBMITTAL

REGISTERED PROFESSIONAL ENGINEER — ERICK V. BEVINCION — No. C 78836 — CIVIL — STATE OF CALIFORNIA

BLACK & VEATCH JOINT VENTURE — BLACK & VEATCH — FILANC

CITY OF MORRO BAY
MORRO BAY WATER RECLAMATION FACILITY (WRF)

GENERAL LEGEND

DESIGNED: EVB, KEZ
DETAILED: MAK
CHECKED:
APPROVED:
DATE:

0 1/2 1
IF THIS BAR DOES NOT MEASURE 1" THEN DRAWING IS NOT TO FULL SCALE

PROJECT NO. 400530

00-G-005
SHEET
OF

D400530
FD81203_PW

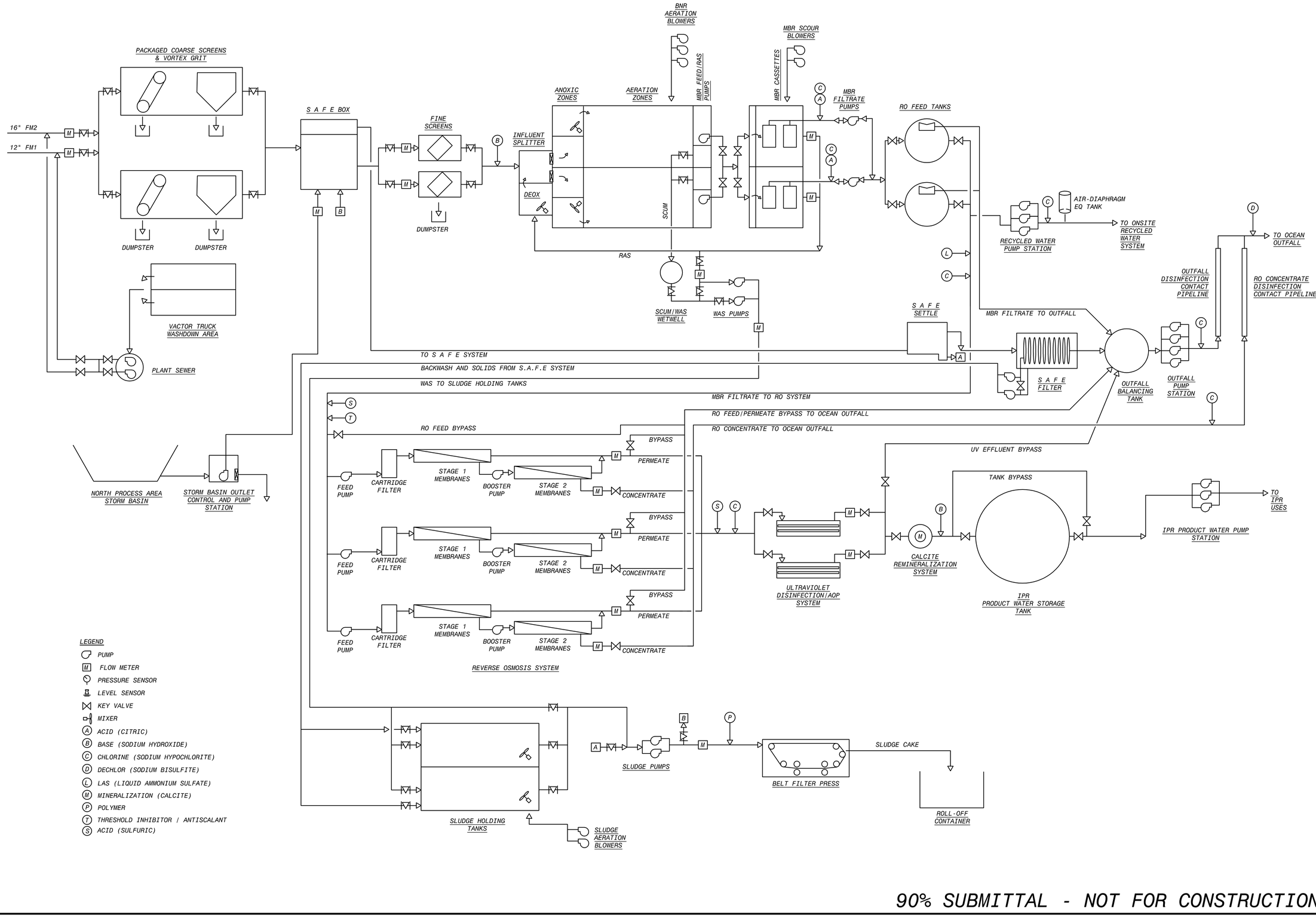

NO.	BY	CHK	APP
C	KEZ	RWF	EVB
B	KEZ	RT	EVB
A	KEZ	RWF	EVB

REVISIONS AND RECORD OF USE

DATE	
3/31/2020	90% SUBMITTAL
7/30/2019	60% SUBMITTAL
3/5/2019	30% SUBMITTAL

REGISTERED PROFESSIONAL ENGINEER — ERICK V. BEVINGTON — No. C 78836 — CIVIL — STATE OF CALIFORNIA

BLACK & VEATCH

JOINT VENTURE

BLACK & VEATCH

FILANC

CITY OF MORRO BAY
MORRO BAY WATER RECLAMATION FACILITY (WRF)

GENERAL PROCESS SCHEMATIC

DESIGNED: EVB, KEZ
DETAILED: MAK
CHECKED:
APPROVED:
DATE:

0 1/2 1

IF THIS BAR DOES NOT MEASURE 1" THEN DRAWING IS NOT TO FULL SCALE

PROJECT NO. 400530

00-G-006
SHEET
OF

90% SUBMITTAL - NOT FOR CONSTRUCTION

D400530
FDB1203_PW

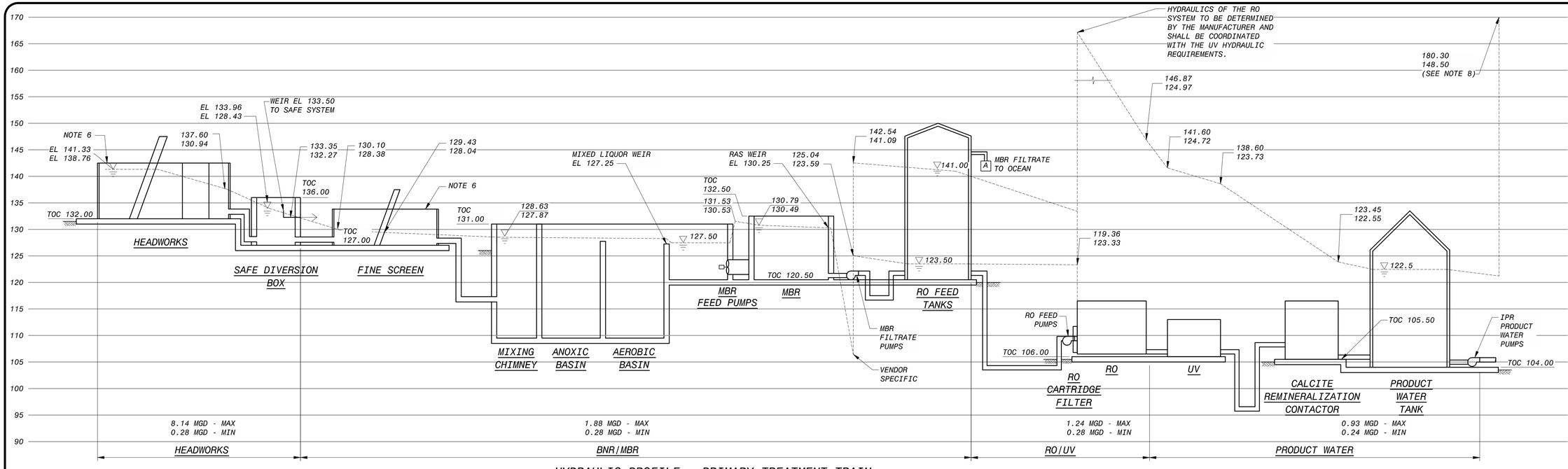

HYDRAULIC PROFILE - PRIMARY TREATMENT TRAIN

VERT SCALE: 1" = 10'-0"

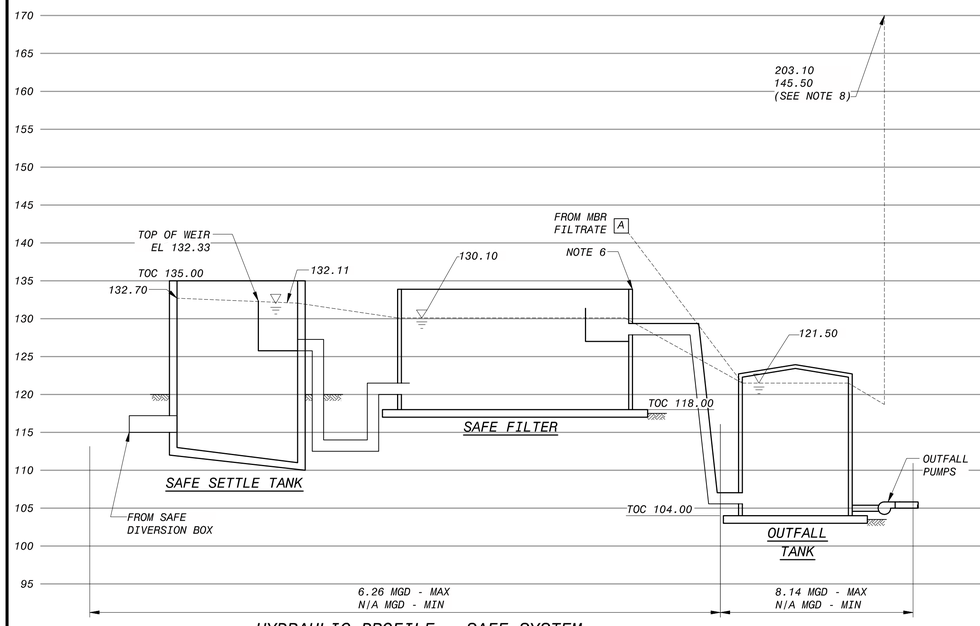

HYDRAULIC PROFILE - SAFE SYSTEM

VERT SCALE: 1" = 10'-0"

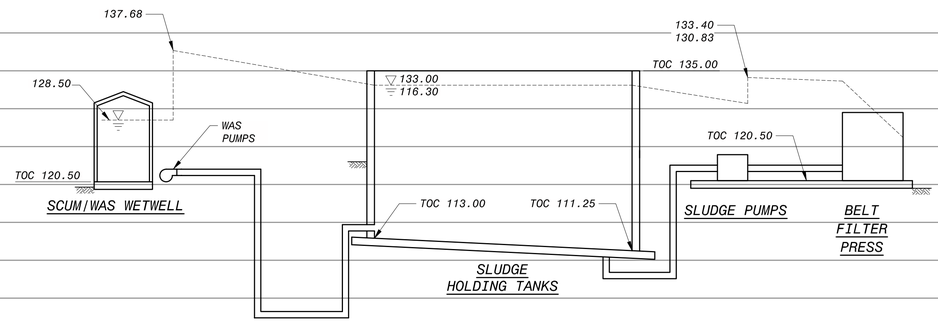

HYDRAULIC PROFILE - RESIDUALS SYSTEM

VERT SCALE: 1" = 10'-0"

NOTES:

1. PEAK HOUR FLOW UP TO THE SPLITTER BOX 8.14 MGD.
2. PEAK HOUR FLOW BETWEEN SPLITTER BOX AND MBR IS 1.88 MGD.
3. PEAK HOUR FLOW DOWNSTREAM OF MBR IS 1.16 MGD.
4. THE MINIMUM DIURNAL FLOW MODELED IS 0.25 MGD. THIS OCCURS THROUGHOUT THE LIQUID STREAM OF THE PLANT.
5. THE TOP NUMBER ON THE HYDRAULIC PROFILE IS THE MAXIMUM HGL. THE LOWER NUMBER ON THE HYDRAULIC PROFILE IS THE MINIMUM HGL.
6. STAINLESS STEEL TANK FURNISHED WITH EQUIPMENT PACKAGE. TOP OF TANK EL IS VENDOR SPECIFIC WITH AT LEAST 2' OF FREEBOARD.
7. NOTE FINISHED GRADE ELEVATIONS SHOWN THAT ARE ADJACENT TO TANKS AND CONCRETE SLABS ARE APPROXIMATE. SEE CIVIL GRADING AND PAVING DRAWINGS FOR EXACT FINISHED GRADE ELEVATIONS.
8. PUMP DISCHARGE HYDRAULIC GRADE LINES ARE APPROXIMATE. SEE PUMP SPECIFICATIONS FOR DETAILS.

90% SUBMITTAL - NOT FOR CONSTRUCTION

NO.	BY	CHK	APP	DATE	REVISIONS AND RECORD OF USE
C	KEZ	RWF	EVB	3/31/2020	90% SUBMITTAL
B	KEZ	RT	EVB	7/30/2019	60% SUBMITTAL
A	KEZ	RWF	EVB	3/5/2019	30% SUBMITTAL

REGISTERED PROFESSIONAL ENGINEER
ERICK V. BEVINGTON
No. C 78836
CIVIL
STATE OF CALIFORNIA

BLACK & VEATCH
JOINT VENTURE
BLACK & VEATCH
FILANC

CITY OF MORRO BAY
MORRO BAY WATER
RECLAMATION FACILITY (WRF)

GENERAL
HYDRAULIC PROFILES

DESIGNED: EVB, KEZ
DETAILED: MAK
CHECKED:
APPROVED:
DATE:

0 1/2 1
IF THIS BAR DOES NOT MEASURE 1" THEN DRAWING IS NOT TO FULL SCALE

PROJECT NO.
400530

00-G-007
SHEET
OF

D400530
FD81203_PW

| STRUCTURE, ROOM OR AREA | | | | HAZARDOUS MATERIALS | | | | BUILDING CODE | | | | | | | | | | | | | FIRE PROTECTION | | | VENTILATION | | | | FIRE CODE REQUIREMENTS | | | | | | | | | | | | |

GENERAL NOTES

1. HORIZONTAL CONTROL: COORDINATES ARE BASED ON STATE PLANE COORDINATE SYSTEM (NAD83) CALIFORNIA ZONE V, US FOOT. COORDINATES ON STRUCTURES DEPICT THE EXTERIOR FACE OF THE CONCRETE SUBSTRUCTURE FOUNDATION WALL OR FOOTING WALL.

2. VERTICAL CONTROL: ELEVATIONS ARE BASED ON THE PROJECT BENCHMARK: NGS PID FV1098: BRASS CAP STAMPED "J 693 RESET 1968" SET IN CONCRETE, ELEVATION = 151.79.

3. EXISTING UTILITIES AND STRUCTURES (UNDERGROUND, SURFACE, OR OVERHEAD) ARE INDICATED ONLY TO THE EXTENT THAT SUCH INFORMATION WAS KNOWN, OR MADE AVAILABLE TO, OR DISCOVERED BY THE ENGINEER IN PREPARING THE DRAWINGS. THE LOCATIONS, CONFIGURATIONS, AND ELEVATIONS OF SUBSURFACE FACILITIES AND UTILITIES ARE APPROXIMATE, AND NOT ALL UTILITIES AND FACILITIES MAY BE INDICATED. OVERHEAD UTILITIES ARE NOT INDICATED IN ARCHITECTURAL ELEVATIONS, PROFILE OR SECTION DRAWINGS.

4. "SCREENED" (LIGHT) DELINEATION INDICATED ON THE DRAWINGS DENOTES EXISTING FACILITIES. "SCREENED" INFORMATION WAS TAKEN FROM EXISTING CONSTRUCTION DRAWINGS AND DATA, IS FOR REFERENCE ONLY, AND SHALL BE FIELD VERIFIED BY THE CONTRACTOR PRIOR TO THE ORDERING OF MATERIALS AND BEGINNING OF CONSTRUCTION. "BOLD" DELINEATION IS NEW WORK TO BE CONSTRUCTED UNDER THIS CONTRACT.

5. CALL BEFORE YOU DIG. VERIFY PRECISE LOCATIONS AND ELEVATIONS OF ALL UTILITIES AND STRUCTURES, WHETHER INDICATED ON THE DRAWINGS OR NOT, IN THE FIELD IN ADVANCE OF EXCAVATING, BY CONTACTING ALL UTILITIES AND OTHER AGENCIES, AND BY PROSPECTING. CONTRACTOR SHALL BE RESPONSIBLE FOR REMOVAL, DEMOLITION, RECONSTRUCTION, AND RECONNECTION OF EXISTING FACILITIES AS REQUIRED TO COMPLETE THE WORK. IF REQUIRED AFTER FIELD VERIFICATION, COORDINATE WITH THE ENGINEER TO DETERMINE ANY NECESSARY MODIFICATIONS TO PROPOSED NEW WORK.

6. BEFORE CONSTRUCTION IS STARTED, COORDINATE WITH THE OWNER OF EACH UTILITY AND DEFINE THE REQUIREMENTS AND METHODS TO ACCOMMODATE THE PROTECTION, TEMPORARY SUPPORT, ADJUSTMENT, OR RELOCATION OF ANY UTILITIES AFFECTED BY THE PROPOSED NEW WORK.

7. COMPLY WITH THE GOVERNING AGENCY NPDES CONSTRUCTION REQUIREMENTS AND PROVIDE APPROPRIATE MITIGATION MEASURES OR PROTECTION AND RESTORATION AT ALL LOCATIONS AS REQUIRED BY THEIR OPERATIONS, AND AS DIRECTED BY ENGINEER. SPECIAL CONSTRUCTION REQUIREMENTS, TEMPORARY PROTECTIVE FENCING OR BARRICADES, SHEETING, SHORING, EROSION PROTECTION, AND SURFACE RESTORATION AT CERTAIN LOCATIONS ARE INDICATED ON THE DRAWINGS TO BRING ATTENTION TO SENSITIVE AREAS.

8. THE CONTRACTOR SHALL BE RESPONSIBLE FOR THE PROTECTION OF ALL PROPERTY CORNER MARKERS. PROPERTY CORNER MARKERS DAMAGED BY CONSTRUCTION ACTIVITIES SHALL BE REESTABLISHED BY A PROFESSIONAL SURVEYOR LICENSED IN THE STATE OF CALIFORNIA.

9. REFER TO THE GEOTECHNICAL REPORT FOR TEST HOLE LOCATIONS AND THE FINDINGS OF THE GEOTECHNICAL INVESTIGATIONS.

10. CONTRACTOR SHALL INSTALL ALL PIPELINES, PAVING, WALKWAYS, AND CURB AND GUTTER AT A UNIFORM GRADE BETWEEN ELEVATIONS DEPICTED ON THE DRAWINGS.

11. FOR ALL SITE GRADING, SMOOTH PARABOLIC TRANSITIONS SHALL BE MADE BETWEEN CHANGES IN SLOPE. PARABOLIC ROUNDING SHALL APPLY TO ALL CUT AND FILL SECTIONS.

12. FINISHED GRADE ELEVATION AT THE BUILDING FACE, WHERE NOT ADJACENT TO PAVEMENT, SHALL BE APPROXIMATELY 6 INCHES BELOW FINISHED FLOOR ELEVATION UNLESS OTHERWISE NOTED. FINISHED GRADE ELEVATION ADJACENT TO BASINS SHALL BE APPROXIMATE AS INDICATED BY CONTOURS, OR AS REQUIRED TO MEET STAIR LANDINGS.

13. THE CONTRACTOR'S OPERATIONS SHALL CONFORM TO THE RULES AND REGULATIONS OF THE STATE CONSTRUCTION SAFETY ORDERS PERTAINING TO EXCAVATION AND TRENCHING.

14. RESTRAINED JOINTS SHALL BE PROVIDED FOR BURIED PIPING AS INDICATED ON THE DRAWINGS AND/OR AS SCHEDULED IN THE SPECIFICATIONS.

15. THE DRAWINGS INDICATE TYPES OF PIPE SUPPORT SYSTEMS AT VARIOUS LOCATIONS. HOWEVER, All PIPE SUPPORTS, HANGERS, BRACKETS, INSERTS OR BRACES ARE NOT SHOWN.

16. THE TERM "PROPOSED" AS INDICATED ON THE DRAWINGS MEANS THE ITEM IS DESIGNED OR PLANNED TO BE PROVIDED BY OWNER OR OTHERS SEPARATE FROM THIS CONTRACT. THE TERM "FUTURE" AS INDICATED ON THE DRAWINGS REFERS TO THE ENGINEER'S INTERPRETATION OF THE ITEM FOR THE FUTURE, BASED ON AVAILABLE INFORMATION.

17. UNLESS OTHERWISE SPECIFIED, INDICATED ON THE DRAWINGS, OR DIRECTED BY THE ENGINEER, INSTALL PIPELINES SLOPING DOWNWARD FROM AN AIR VALVE. HIGH POINTS IN THE PIPELINE WILL NOT BE PERMITTED EXCEPT AT LOCATIONS OF AIR VALVES AS INDICATED ON THE DRAWINGS. REVIEW THE PIPELINE PROFILE REQUIREMENTS WITH THE ENGINEER PRIOR TO PREPARING LAYING SCHEDULES AND PERFORMING FIELD STAKING.

18. FIELD VERIFY PRECISE LOCATION, ELEVATION, AND ARRANGEMENT OF CONNECTIONS OF NEW PIPELINES WITH EXISTING PIPELINES BASED ON FIELD CONDITIONS, INCLUDING EXPOSING EXISTING PIPING PRIOR TO FABRICATING NEW PIPING. PROVIDE FITTINGS, ADAPTERS, SOLID SLEEVE CLOSURES, AND HARNESSED MECHANICAL COUPLING; ROTATE FITTINGS; DEFLECT JOINTS; AND MODIFY EXISTING PIPING AS APPLICABLE AND AS REQUIRED TO MAKE CONNECTIONS, INCLUDING ADJUSTMENTS FOR ANY OFFSETS IN CENTERLINE ELEVATIONS BETWEEN PIPELINES. PROVIDE TEMPORARY PLUG WITH FACTORY OUTLET SIZED AS REQUIRED FOR TESTING AND DISINFECTION WORK BEFORE MAKING CONNECTION, WHEN APPLICABLE. COORDINATE MAKING EACH CONNECTION WITH THE OWNER.

90% SUBMITTAL - NOT FOR CONSTRUCTION

NO.	BY	CHK	APP	DATE	REVISIONS AND RECORD OF USE
A	KEZ	RT	EVB	3/31/2020	90% SUBMITTAL

REGISTERED PROFESSIONAL ENGINEER
ERICK V. BEVINGTON
No. C 78836
CIVIL
STATE OF CALIFORNIA

BLACK & VEATCH

JOINT VENTURE

BLACK & VEATCH

FILANC

CITY OF MORRO BAY
MORRO BAY WATER
RECLAMATION FACILITY (WRF)

GENERAL
GENERAL NOTES

DESIGNED: EVB, KEZ
DETAILED: MAK
CHECKED:
APPROVED:
DATE:

0 1/2 1
IF THIS BAR DOES NOT MEASURE 1" THEN DRAWING IS NOT TO FULL SCALE

PROJECT NO.
400530

00-G-009
SHEET
OF

D400530
FD81203_PW

80' 40' 0 80' 160'
1"=80'

P/L
E/L
P/E
TCE
R/W

100' PG&E EASEMENT
PG&E HIGH VOLTAGE EASEMENT
CURRENT LIMITS CITY OF MORRO BAY
TEMPORARY CONSTRUCTION EASEMENT
BAYSIDE CARE CENTER
WHALE ROCK PIPELINE EASEMENT
PROPERTY LINE
STORMWATER POND 2
PERMANENT EASEMENT FOR ACCESS ROAD
ENTRANCE RAMP
THERESA ROAD
SE BAY BLVD
EXIT RAMP
WRF PARCEL LIMITS
VACTOR RECEIVING STATION/WASHDOWN
EMERGENCY GENERATOR
ELECTRICAL ROOM
S.A.F.E. SETTLE TANK
DEWATERING AREA
S.A.F.E. FILTER
SLUDGE HOLDING TANKS
HEADWORKS
BNR BASINS
MBR SYSTEM
RO FEED TANKS
STORMWATER POND 1
PRODUCT WATER STORAGE TANK
CALCITE CONTACTORS AREA
OUTDOOR STORAGE AISLES
WASH RACK
OPERATIONS BUILDING
STORAGE
PARKING CANOPY
VEHICLE EQUIPMENT STORAGE
DECHLORINATION STATION
RO/UV BUILDING
MAINTENANCE BUILDING
OUTFALL PUMP STATION
CHEMICAL STORAGE AND CONTAINMENT AREA
TEMPORARY CONSTRUCTION EASEMENT

11-C-101
11-C-102
11-C-103
11-C-104
11-C-105

90% SUBMITTAL - NOT FOR CONSTRUCTION

NO.	BY	CHK	APP
C	KEZ	RWF	EVB
B	EVB	RTB	EVB
A	ENY	RFW	EVB

REVISIONS AND RECORD OF USE

DATE	
3/31/2020	90% SUBMITTAL
7/30/2019	60% SUBMITTAL
3/5/2019	30% SUBMITTAL

No. C 78836

BLACK & VEATCH
JOINT VENTURE
BLACK & VEATCH
FILANC

CITY OF MORRO BAY
MORRO BAY WATER
RECLAMATION FACILITY (WRF)

SITE - OVERALL
CIVIL
GRADING AND PAVING KEY PLAN

DESIGNED: EBV
DETAILED: SMM
CHECKED:
APPROVED:
DATE:

0 1/2 1
IF THIS BAR DOES NOT MEASURE 1" THEN DRAWING IS NOT TO FULL SCALE

PROJECT NO.
400530

11-C-001
SHEET
OF

FD9000A
D400530
PLOTTED: 3/19/2020 2:33 PM FILE: C:\pw_working\bvw_americas\d0683625\400530-11-C-001.dwg

NOTES:

1. UNLESS OTHERWISE NOTED, ALL CURB SHALL HAVE 6 INCH FACE HEIGHT AND SHALL BE TYPE A-2 WITH GUTTER OR TYPE C WITHOUT GUTTER, AS INDICATED AND IN ACCORDANCE WITH THE CITY OF MORRO BAY STANDARD DETAILS.
2. RIBBON CURBS SHALL BE PER DETAIL C ON M-00-514.
3. UNLESS OTHERWISE NOTED, ALL SITE ACCESS ROADWAYS AND OTHER PAVED PARKING AREAS SHALL BE 2.75 INCHES AC ON 9.5 INCHES AGREGGATE BASE.
4. CROSS GUTTERS SHALL BE SIMILAR TO SLO COUNTY DPW STANDARD DETAIL D-5.
5. PAVEMENT AND GUTTERS SHALL BE GRADED AND WARPED IF NECESSARY TO ENSURE POSITIVE DRAINAGE.
6. DRAIN CURB CUTS SHALL HAVE 12 INCH TRANSITIONS ON EACH SIDE OF 12 INCH CURB OPENINGS FLUSH WITH PAVEMENT.
7. SIDEWALKS SHALL BE SIMILAR TO CITY OF MORRO BAY STANDARD DETAIL B-5 WITH #4 REINFORCING PLACED AT 24" EACH WAY. DOWEL TO STRUCTURES AT DOORWAYS. OTHERWISE PROVIDE SEPARATION FROM STRUCTURES. PROVIDE 24 INCHES NON-EXPANSIVE MATERIAL BELOW SIDEWALKS.
8. GUARD POST LOCATIONS ARE APPROXIMATE. ADJUST IN FIELD.
9. ON ACCESS ROAD, THE MINIMUM VERTICAL CURVE LENGTH ALLOWABLE AT THE INTERSECTION OF TWO GRADES SHALL BE 50 FEET EXCEPT IN THE HEADWORKS AREA WHERE THE MINIMUM VERTICAL CURVE LENGTH SHALL BE 40 FEET. VERTICAL CURVES MAY BE ELIMINATED WHERE THE ALGEBRAIC DIFFERENCE IN GRADES DOES NOT EXCEED 2 PERCENT.

LEGEND

AC PAVEMENT

CONCRETE SIDEWALK/PAVEMENT

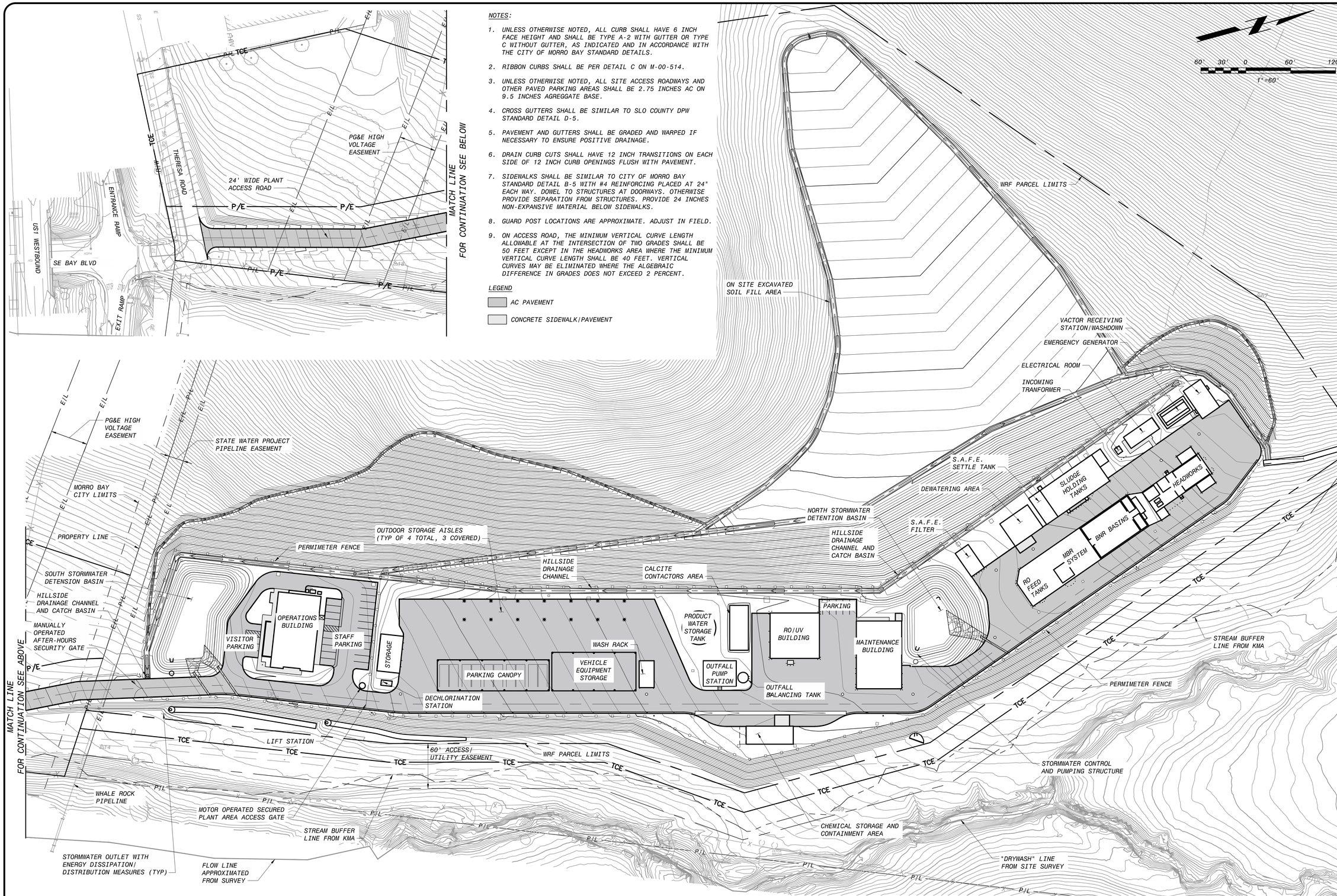

90% SUBMITTAL - NOT FOR CONSTRUCTION

DATE	REVISIONS AND RECORD OF USE	NO.	BY	CHK	APP
3/31/2020	90% SUBMITTAL	C	KEZ	RWF	EVB

No. C 78836

BLACK & VEATCH

JOINT VENTURE

FILANC

CITY OF MORRO BAY
MORRO BAY WATER RECLAMATION FACILITY (WRF)

SITE - OVERALL
CIVIL
GRADING AND PAVING OVERVIEW

DESIGNED: EVB
DETAILED: SMM
CHECKED:
APPROVED:
DATE:

0 1/2 1
IF THIS BAR DOES NOT MEASURE 1" THEN DRAWING IS NOT TO FULL SCALE

PROJECT NO. 400530

11-C-002
SHEET
OF

FD9000A
D400530
PLOTTED: 3/19/2020 2:34 PM FILE: C:\pw_working\bvw_americas\d0683625\400530-11-C-002.dwg



NOTES:

1. *OFFSITE AND HILLSIDE DRAINAGE IS CAPTURED VIA PERIMETER SWALES AND DIVERTED AROUND THE WRF PLANT SITE. THIS IS DONE TO SEGREGATE UNDEVELOPED AREA FLOWS FROM DEVELOPED WRF AREA FLOWS TO BETTER CONTROL STORMWATER QUALITY AND FLOW. SEE SITE PREPARATION DRAWINGS (AREA 10) AND DRAINAGE REPORT FOR DETAILS ABOUT THIS SYSTEM.*
2. *WRF PLANT AREA STORMWATER PONDS AND OUTLET CONTROL STRUCTURES ARE TO BE CONSTRUCTED WITH EARLY (SITE PREPARATION) WORK. SEE SITE PREPARATION DRAWINGS (AREA 10) AND DRAINAGE REPORT FOR DETAILS ABOUT THIS SYSTEM.*
3. *SEE DRAWINGS 11-C-601 AND 11-C-602 FOR COORDINATE AND CURVE TABLES.*
4. *ROADWAY COORDINATES ARE LOCATED AT EDGE OF CONCRETE WHERE CURB OR CURB AND GUTTER MEET ASPHALT.*

NO.	BY	CHK	APP	DATE	REVISIONS AND RECORD OF USE
C	KEZ	RWF	EVB	3/31/2020	90% SUBMITTAL
B	EVB	RTB	EVB	7/30/2019	60% SUBMITTAL

REGISTERED PROFESSIONAL ENGINEER
No. C 78836
CIVIL
STATE OF CALIFORNIA

BLACK & VEATCH

JOINT VENTURE

FILANC

BLACK & VEATCH

CITY OF MORRO BAY
MORRO BAY WATER RECLAMATION FACILITY (WRF)

SITE - ACCESS ROAD AREA
CIVIL
GRADING AND PAVING PLAN

DESIGNED: EVB
DETAILED: SMM
CHECKED:
APPROVED:
DATE:

0 1/2 1
IF THIS BAR DOES NOT MEASURE 1" THEN DRAWING IS NOT TO FULL SCALE

PROJECT NO.
400530

11-C-101
SHEET
OF

20' 10' 0 20' 40'
1"=20'

90% SUBMITTAL - NOT FOR CONSTRUCTION

FB9000A
D400530
PLOTTED: 3/19/2020 2:34 PM FILE: C:\pw_working\bvw_americas\d0683625\400530-11-C-101-105.dwg

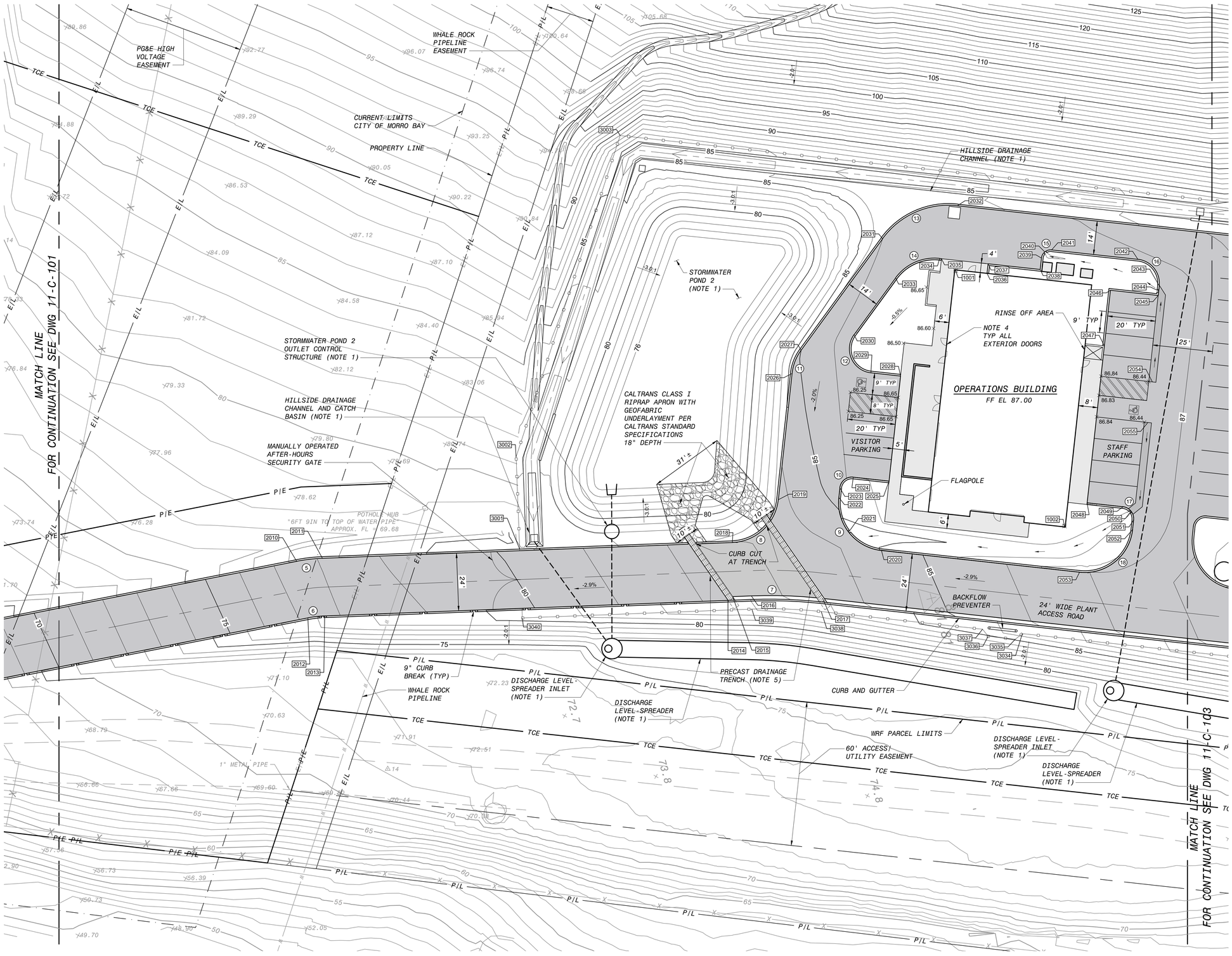

NOTES:

1. *OFFSITE AND HILLSIDE DRAINAGE IS CAPTURED VIA PERIMETER SWALES AND DIVERTED AROUND THE WRF PLANT SITE. THIS IS DONE TO SEGREGATE UNDEVELOPED AREA FLOWS FROM DEVELOPED WRF AREA FLOWS TO BETTER CONTROL STORMWATER QUALITY AND FLOW. SEE SITE PREPARATION DRAWINGS (AREA 10) AND DRAINAGE REPORT FOR DETAILS ABOUT THIS SYSTEM.*
2. *WRF PLANT AREA STORMWATER PONDS AND OUTLET CONTROL STRUCTURES ARE TO BE CONSTRUCTED WITH EARLY (SITE PREPARATION) WORK. SEE SITE PREPARATION DRAWINGS (AREA 10) AND DRAINAGE REPORT FOR DETAILS ABOUT THIS SYSTEM.*
3. *SEE STRUCTURAL DRAWINGS FOR SPECIFIC LOCATION OF INDICATED BUILDING COORDINATE POINTS.*
4. *ADA ACCESS ZONE. SLOPE PAVING FROM 1/4" BELOW INTERIOR ELEVATION AWAY AT NO MORE THAN 2% FOR 60" OUTWARD FROM BUILDING AND 42" FROM BOTH SIDES OF DOOR.*
5. *TRENCHES TO BE RATED FOR H-20 TRAFFIC, HAVING BOLT DOWN GRATING WITH HDG FINISH. 23" X 23" INSIDE DIMENSIONS, JENSEN PRECAST MODEL 2222 OR EQUAL. PLACE WITH MIN 9" X 9" CONCRETE COLLAR ALONG BOTH SIDES OF TRENCH LENGTH. DISCHARGE INTO POND ONLY. SLOPE 0.5% TO DISCHARGE END. REMOVE GRATING AND CONCRETE FILL TRENCH AT UPSTREAM END WHERE BEYOND CURB FACE.*
6. *SEE DRAWINGS 11-C-601 AND 11-C-602 FOR COORDINATE AND CURVE TABLES.*
7. *ROADWAY COORDINATES ARE LOCATED AT EDGE OF ASPHALT WHERE CURB OR CURB AND GUTTER BEGIN.*

20' 10' 0 20' 40'
1"=20'

90% SUBMITTAL - NOT FOR CONSTRUCTION

NO.	BY	CHK	APP	DATE	REVISIONS AND RECORD OF USE
C	KEZ	RWF	EVB		
B	EVB	RTB	EVB	3/31/2020	90% SUBMITTAL
				7/30/2019	60% SUBMITTAL

No. C 78836

BLACK & VEATCH
JOINT VENTURE
FILANC
BLACK & VEATCH

CITY OF MORRO BAY
MORRO BAY WATER
RECLAMATION FACILITY (WRF)

SITE - SOUTH OPERATIONS AREA
CIVIL
GRADING AND PAVING PLAN

DESIGNED: EVB
DETAILED: SMM
CHECKED:
APPROVED:
DATE:

0 1/2 1
IF THIS BAR DOES NOT MEASURE 1" THEN DRAWING IS NOT TO FULL SCALE

PROJECT NO.
400530

11-C-102
SHEET
OF

FB9000A
D400530
PLOTTED: 3/19/2020 2:34 PM FILE: C:\pw_working\bvw_americas\d0683625\400530-11-C-101-105.dwg

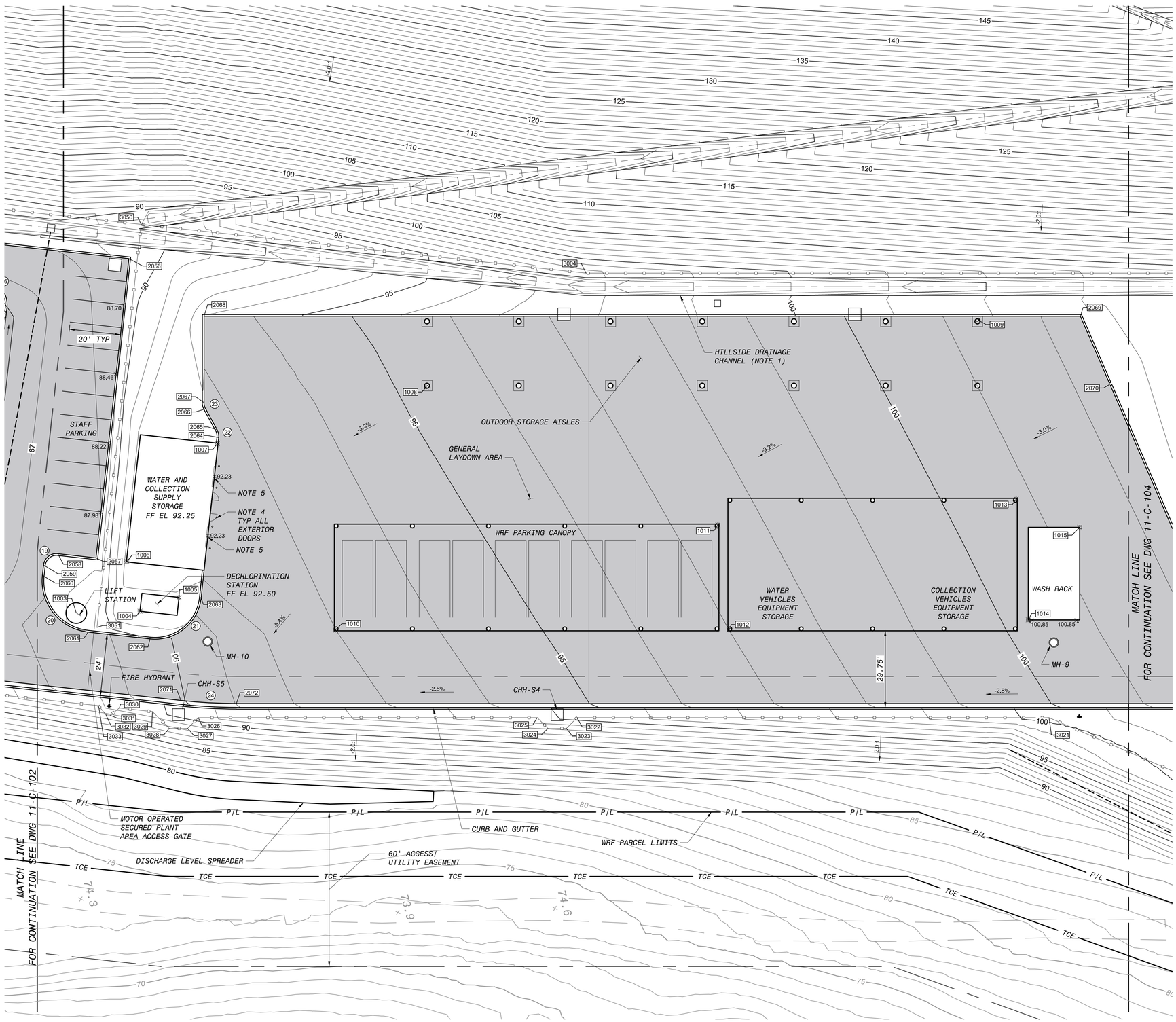

NOTES:

1. *OFFSITE AND HILLSIDE DRAINAGE IS CAPTURED VIA PERIMETER SWALES AND DIVERTED AROUND THE WRF PLANT SITE. THIS IS DONE TO SEGREGATE UNDEVELOPED AREA FLOWS FROM DEVELOPED WRF AREA FLOWS TO BETTER CONTROL STORMWATER QUALITY AND FLOW. SEE SITE PREPARATION DRAWINGS (AREA 10) AND DRAINAGE REPORT FOR DETAILS ABOUT THIS SYSTEM.*
2. *WRF PLANT AREA STORMWATER PONDS AND OUTLET CONTROL STRUCTURES ARE TO BE CONSTRUCTED WITH EARLY (SITE PREPARATION) WORK. SEE SITE PREPARATION DRAWINGS (AREA 10) AND DRAINAGE REPORT FOR DETAILS ABOUT THIS SYSTEM.*
3. *SEE STRUCTURAL DRAWINGS FOR SPECIFIC LOCATION OF INDICATED BUILDING COORDINATE POINTS.*
4. *ADA ACCESS ZONE. SLOPE PAVING FROM 1/4" BELOW INTERIOR ELEVATION AWAY AT NO MORE THAN 2% FOR 60" OUTWARD FROM BUILDING AND 42" FROM BOTH SIDES OF DOOR.*
5. *VEHICLE ACCESS ZONE. SLOPE PAVING FROM 1/4" BELOW INTERIOR ELEVATION AWAY AT NO MORE THAN 5% FOR 60" OUTWARD FROM BUILDING.*
6. *SEE DRAWINGS 11-C-601 AND 11-C-602 FOR COORDINATE AND CURVE TABLES.*
7. *ROADWAY COORDINATES ARE LOCATED AT EDGE OF ASPHALT WHERE CURB OR CURB AND GUTTER BEGIN.*

20' 10' 0 20' 40'

1"=20'

90% SUBMITTAL - NOT FOR CONSTRUCTION

NO.	BY	CHK	APP	DATE	REVISIONS AND RECORD OF USE
C	KEZ	RWF	EVB	3/31/2020	90% SUBMITTAL
B	EVB	RTB	EVB	7/30/2019	60% SUBMITTAL

No. C 78836

BLACK & VEATCH

JOINT VENTURE

BLACK & VEATCH

FILANC

CITY OF MORRO BAY
MORRO BAY WATER
RECLAMATION FACILITY (WRF)

SITE - NORTH OPERATIONS AREA
CIVIL
GRADING AND PAVING PLAN

DESIGNED: EVB
DETAILED: SMM
CHECKED:
APPROVED:
DATE:

0 1/2 1

IF THIS BAR DOES NOT MEASURE 1" THEN DRAWING IS NOT TO FULL SCALE

PROJECT NO.
400530

11-C-103
SHEET
OF

FD9000A
D400530
PLOTTED: 3/19/2020 2:35 PM FILE: C:\pw_working\dvw_americas\d0683625\400530-11-C-101-105.dwg

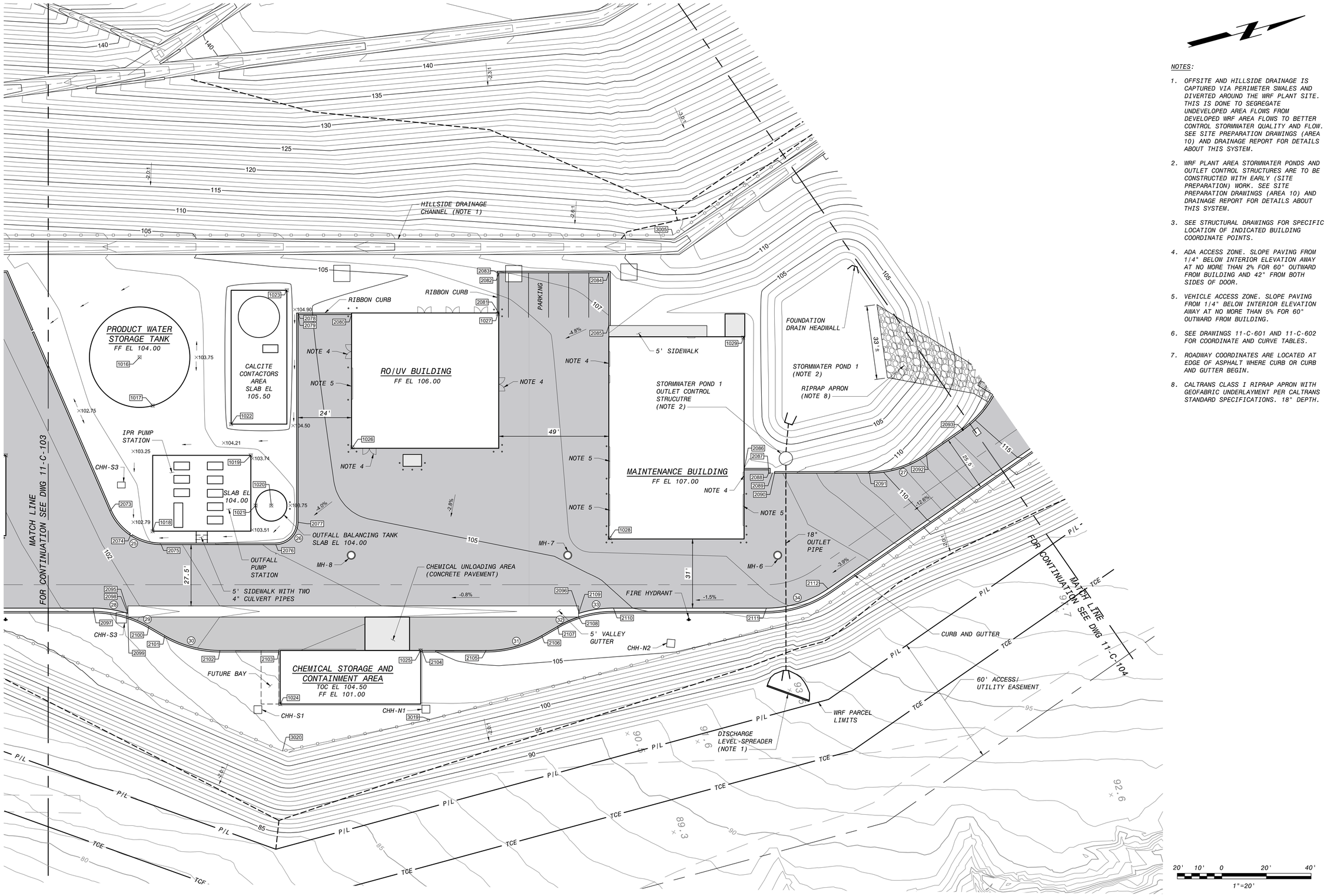

NOTES:

1. *OFFSITE AND HILLSIDE DRAINAGE IS CAPTURED VIA PERIMETER SWALES AND DIVERTED AROUND THE WRF PLANT SITE. THIS IS DONE TO SEGREGATE UNDEVELOPED AREA FLOWS FROM DEVELOPED WRF AREA FLOWS TO BETTER CONTROL STORMWATER QUALITY AND FLOW. SEE SITE PREPARATION DRAWINGS (AREA 10) AND DRAINAGE REPORT FOR DETAILS ABOUT THIS SYSTEM.*
2. *WRF PLANT AREA STORMWATER PONDS AND OUTLET CONTROL STRUCTURES ARE TO BE CONSTRUCTED WITH EARLY (SITE PREPARATION) WORK. SEE SITE PREPARATION DRAWINGS (AREA 10) AND DRAINAGE REPORT FOR DETAILS ABOUT THIS SYSTEM.*
3. *SEE STRUCTURAL DRAWINGS FOR SPECIFIC LOCATION OF INDICATED BUILDING COORDINATE POINTS.*
4. *ADA ACCESS ZONE. SLOPE PAVING FROM 1/4" BELOW INTERIOR ELEVATION AWAY AT NO MORE THAN 2% FOR 60" OUTWARD FROM BUILDING AND 42" FROM BOTH SIDES OF DOOR.*
5. *VEHICLE ACCESS ZONE. SLOPE PAVING FROM 1/4" BELOW INTERIOR ELEVATION AWAY AT NO MORE THAN 5% FOR 60" OUTWARD FROM BUILDING.*
6. *SEE DRAWINGS 11-C-601 AND 11-C-602 FOR COORDINATE AND CURVE TABLES.*
7. *ROADWAY COORDINATES ARE LOCATED AT EDGE OF ASPHALT WHERE CURB OR CURB AND GUTTER BEGIN.*
8. *CALTRANS CLASS I RIPRAP APRON WITH GEOFABRIC UNDERLAYMENT PER CALTRANS STANDARD SPECIFICATIONS. 18" DEPTH.*

NO.	BY	CHK	APP	DATE	REVISIONS AND RECORD OF USE
C	KEZ	RWF	EVB	3/31/2020	90% SUBMITTAL
B	EVB	RTB	EVB	7/30/2019	60% SUBMITTAL

No. C 78836

BLACK & VEATCH

JOINT VENTURE

FILANC

CITY OF MORRO BAY
MORRO BAY WATER RECLAMATION FACILITY (WRF)

SITE - SOUTH PROCESS AREA CIVIL
GRADING AND PACING PLAN

DESIGNED:	EVB
DETAILED:	SMM
CHECKED:	
APPROVED:	
DATE:	

0 1/2 1

IF THIS BAR DOES NOT MEASURE 1" THEN DRAWING IS NOT TO FULL SCALE

PROJECT NO.
400530

11-C-104
SHEET
OF

20' 10' 0 20' 40'
1"=20'

90% SUBMITTAL - NOT FOR CONSTRUCTION

FD8000A
D400530
PLOTTED: 3/19/2020 2:35 PM FILE: C:\pw_working\bvw_americas\d0683825\400530-11-C-101-105.dwg

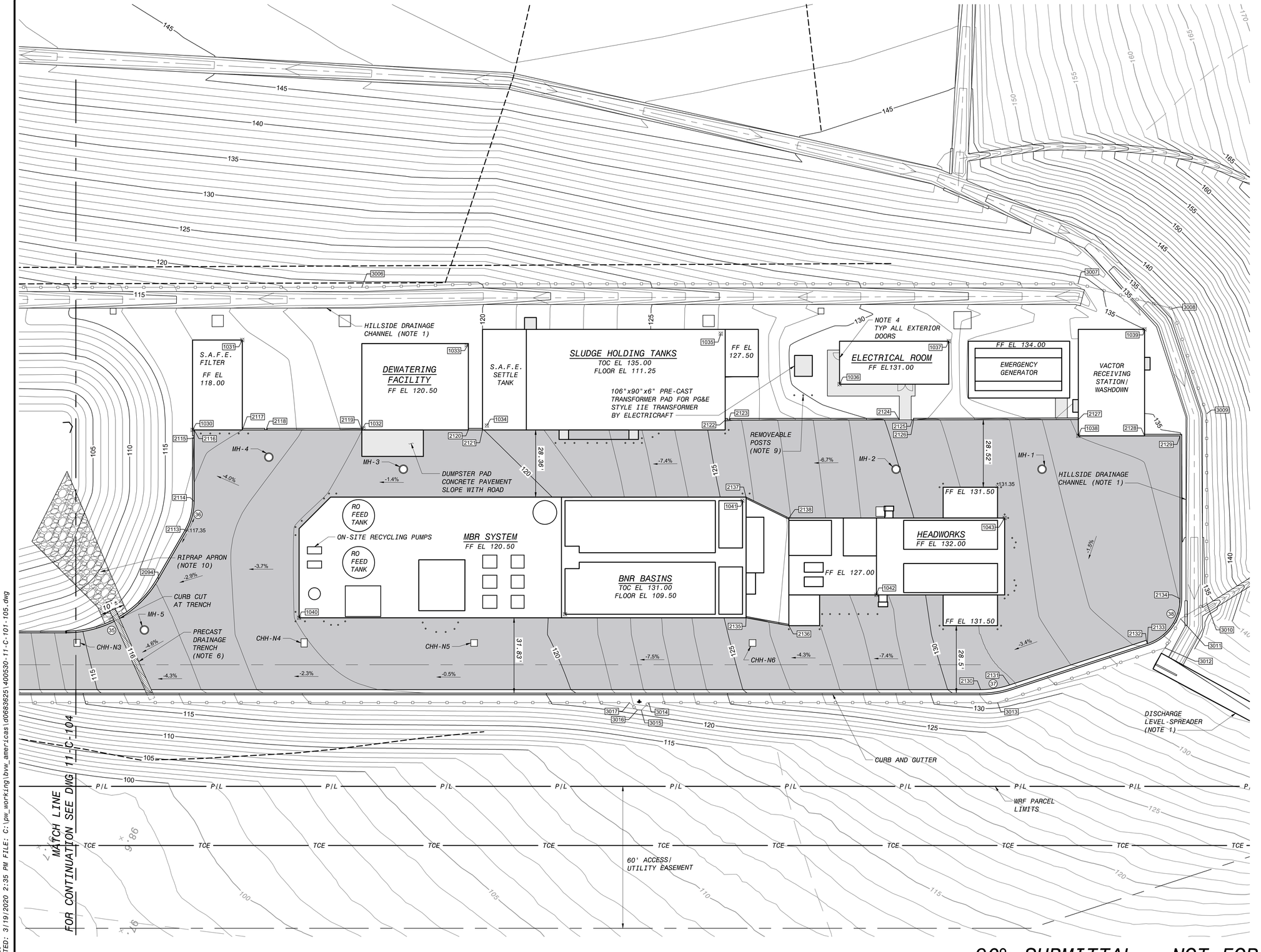

NOTES:

1. *OFFSITE AND HILLSIDE DRAINAGE IS CAPTURED VIA PERIMETER SWALES AND DIVERTED AROUND THE WRF PLANT SITE. THIS IS DONE TO SEGREGATE UNDEVELOPED AREA FLOWS FROM DEVELOPED WRF AREA FLOWS TO BETTER CONTROL STORMWATER QUALITY AND FLOW. SEE SITE PREPARATION DRAWINGS (AREA 10) AND DRAINAGE REPORT FOR DETAILS ABOUT THIS SYSTEM.*
2. *WRF PLANT AREA STORMWATER PONDS AND OUTLET CONTROL STRUCTURES ARE TO BE CONSTRUCTED WITH EARLY (SITE PREPARATION) WORK. SEE SITE PREPARATION DRAWINGS (AREA 10) AND DRAINAGE REPORT FOR DETAILS ABOUT THIS SYSTEM.*
3. *SEE STRUCTURAL DRAWINGS FOR SPECIFIC LOCATION OF INDICATED BUILDING COORDINATE POINTS.*
4. *ADA ACCESS ZONE. SLOPE PAVING FROM 1/4" BELOW INTERIOR ELEVATION AWAY AT NO MORE THAN 2% FOR 60" OUTWARD FROM BUILDING AND 42" FROM BOTH SIDES OF DOOR.*
5. *VEHICLE ACCESS ZONE. SLOPE PAVING FROM 1/4" BELOW INTERIOR ELEVATION AWAY AT NO MORE THAN 5% FOR 60" OUTWARD FROM BUILDING.*
6. *TRENCHES TO BE RATED FOR H-20 TRAFFIC, HAVING BOLT DOWN GRATING WITH HDG FINISH. 23" X 23" INSIDE DIMENSIONS, JENSEN PRECAST MODEL 2222 OR EQUAL. PLACE WITH MIN 9" X 9" CONCRETE COLLAR ALONG BOTH SIDES OF TRENCH LENGTH. DISCHARGE INTO POND ONLY. SLOPE 0.5% TO DISCHARGE END. REMOVE GRATING AND CONCRETE FILL TRENCH AT UPSTREAM END WHERE BEYOND CURB FACE.*
7. *SEE DRAWINGS 11-C-601 AND 11-C-602 FOR COORDINATE AND CURVE TABLES.*
8. *ROADWAY COORDINATES ARE LOCATED AT EDGE OF ASPHALT WHERE CURB OR CURB AND GUTTER BEGIN.*
9. *(3) REMOVEABLE BARRIER POSTS PER PG&E 051122 REQUIREMENTS. 8' AWAY FROM TRANSFORMER.*
10. *CALTRANS CLASS I RIPRAP APRON WITH GEOFABRIC UNDERLAYMENT PER CALTRANS STANDARD SPECIFICATIONS. 18" DEPTH.*

20' 10' 0 20' 40'
1"=20'

90% SUBMITTAL - NOT FOR CONSTRUCTION

NO.	BY	CHK	APP	DATE	REVISIONS AND RECORD OF USE
C	KEZ	RWF	EVB	3/31/2020	90% SUBMITTAL
B	EVB	RTB	EVB	7/30/2019	60% SUBMITTAL

No. C 78836

BLACK & VEATCH
JOINT VENTURE
FILANC
BLACK & VEATCH

CITY OF MORRO BAY
MORRO BAY WATER
RECLAMATION FACILITY (WRF)

SITE - NORTH PROCESS AREA
CIVIL
GRADING AND PAVING PLAN

DESIGNED: EVB
DETAILED: SMM
CHECKED:
APPROVED:
DATE:

0 1/2 1
IF THIS BAR DOES NOT MEASURE 1" THEN DRAWING IS NOT TO FULL SCALE

PROJECT NO.
400530

11-C-105
SHEET
OF

FD9000A
D400530
PLOTTED: 3/19/2020 2:35 PM FILE: C:\pw_working\bvw_americas\d0883625\400530-11-C-101-105.dwg

COORDINATE TABLE - STRUCTURES

POINT NO.	NORTHING	EASTING	DESCRIPTION	REF DWG
1001	2331632.05	5720001.29	OPERATIONS BLDG, INTERSECTION OF GRID LINES 1 AND A	11-C-102, 95-S-101
1002	2331647.96	5720115.60	OPERATIONS BLDG, INTERSECTION OF GRID LINES 8 AND B	11-C-102, 95-S-101
1003	2331707.12	5720151.24	LIFT STATION CENTER	11-C-103
1004	2331731.18	5720157.05	DECHLORINATION STATION PAD SE CORNER	11-C-103, 65-S-101
1005	2331747.24	5720155.83	DECHLORINATION STATION PAD NW CORNER	11-C-103, 65-S-101
1006	2331731.37	5720137.04	WATER AND COLLECTION SUPPLY STORAGE BLDG, INTERSECTION OF GRID LINES 5 AND B	11-C-103, 16-S-101
1007	2331777.33	5720102.09	WATER AND COLLECTION SUPPLY STORAGE BLDG, INTERSECTION OF GRID LINES 1 AND A	11-C-103, 16-S-101
1008	2331861.39	5720102.08	OUTDOOR STORAGE AISLES, INTERSECTION OF GRID LINES 1 AND A	11-C-103, 17-S-101
1009	2332075.38	5720133.21	OUTDOOR STORAGE AISLES, INTERSECTION OF GRID LINES 9 AND B	11-C-103, 17-S-101
1010	2331802.60	5720184.06	PARKING CANOPY, INTERSECTION OF GRID LINES 1 AND A	11-C-103, 14-S-101
1011	2331956.82	5720183.42	PARKING CANOPY, INTERSECTION OF GRID LINES 8 AND B	11-C-103, 14-S-101
1012	2331950.26	5720224.13	VEHICLE EQUIPMENT STORAGE, INTERSECTION OF GRID LINES 1 AND A	11-C-103, 15-S-101
1013	2332071.39	5720204.16	VEHICLE EQUIPMENT STORAGE, INTERSECTION OF GRID LINES 7 AND B	11-C-103, 15-S-101
1014	2332063.58	5720250.74	VEHICLE WASH RACK PAD SE CORNER	11-C-103, 13-S-101
1015	2332092.31	5720221.23	VEHICLE WASH RACK PAD NW CORNER	11-C-103, 13-S-101
1016	2332161.74	5720194.48	PRODUCT WATER STORAGE TANK CENTER	11-C-104, 60-S-101
1017	2332161.68	5720216.98	PRODUCT WATER STORAGE TANK, POINT IN LINE WITH PUMP STATION PAD	11-C-104, 60-S-101
1018	2332146.94	5720271.29	PRODUCT WATER PUMP STATION PAD SE CORNER	11-C-104, 63-S-101
1019	2332198.31	5720250.00	PRODUCT WATER PUMP STATION PAD NW CORNER	11-C-104, 63-S-101
1020	2332201.26	5720274.12	OUTFALL BALANCING TANK CENTER	11-C-104, 63-S-101
1021	2332194.51	5720272.28	OUTFALL BALANCING TANK, POINT IN LINE WITH PUMP STATION PAD	11-C-104, 63-S-101
1022	2332193.45	5720234.17	CALCITE CONTACTORS PAD SE CORNER	11-C-104, 61-S-101
1023	2332233.29	5720182.82	CALCITE CONTACTORS PAD NW CORNER	11-C-104, 61-S-101
1024	2332181.83	5720361.06	CHEMICAL STORAGE AREA SE CORNER	11-C-104, 90-S-101
1025	2332248.92	5720354.40	CHEMICAL STORAGE AREA NW CORNER	11-C-104, 90-S-101
1026	2332243.19	5720258.51	RO/UV BLDG, INTERSECTION OF GRID LINES 6 AND B	11-C-104, 50-S-101
1027	2332321.85	5720217.78	RO/UV BLDG, INTERSECTION OF GRID LINES 1 AND A	11-C-104, 50-S-101
1028	2332343.85	5720327.96	MAINTENANCE BLDG, INTERSECTION OF GRID LINES 7 AND B	11-C-104, 96-S-101
1029	2332425.22	5720256.87	MAINTENANCE BLDG, INTERSECTION OF GRID LINES 1 AND A	11-C-104, 96-S-101
1030	2332531.07	5720224.05	S.A.F.E. FILTER SE CORNER	11-C-105, 73-S-101
1031	2332538.13	5720181.21	S.A.F.E. FILTER NW CORNER	11-C-105, 73-S-101
1032	2332598.44	5720200.10	DEWATERING FACILITY, INTERSECTION OF GRID LINES 1 AND A	11-C-105, 72-S-101
1033	2332628.62	5720150.64	DEWATERING FACILITY, INTERSECTION OF GRID LINES 5 AND B	11-C-105, 72-S-101
1034	2332647.61	5720180.68	S.A.F.E. SETTLE TANK, SE INSIDE WALL CORNER	11-C-105, 71-S-101
1035	2332727.73	5720110.99	SLUDGE HOLDING TANK, NW INSIDE WALL CORNER	11-C-105, 71-S-101
1036	2332782.13	5720114.30	ELECTRICAL ROOM, INTERSECTION OF GRID LINES 1 AND B	11-C-105, 80-S-101
1037	2332819.54	5720081.72	ELECTRICAL ROOM, INTERSECTION OF GRID LINES 5 AND A	11-C-105, 80-S-101
1038	2332884.46	5720101.08	VACTOR STATION PAD SE CORNER	11-C-105, 20-S-101
1039	2332895.77	5720049.30	VACTOR STATION PAD NW CORNER	11-C-105, 20-S-101
1040	2332600.05	5720283.76	MBR SYSTEM PAD SE CORNER	11-C-105, 30-S-101
1041	2332759.99	5720174.38	BNR BASIN, NW INSIDE WALL CORNER	11-C-105, 30-S-101
1042	2332826.64	5720192.96	HEADWORKS NORTH PAD, SE CORDER	11-C-105, 21-S-101
1043	2332866.80	5720144.20	HEADWORKS NORTH PAD, NW CORDER	11-C-105, 21-S-101

COORDINATE TABLE - FENCE

POINT NO.	NORTHING	EASTING	DESCRIPTION	REF DWG
3001	2331426.58	5720065.49	WROUGHT IRON ORNAMENTAL FENCE	11-C-102
3002	2331435.19	5720028.11	WROUGHT IRON ORNAMENTAL FENCE	11-C-102
3003	2331512.03	5719910.41	WROUGHT IRON ORNAMENTAL FENCE	11-C-102
3004	2331932.97	5720075.65	WROUGHT IRON ORNAMENTAL FENCE	11-C-103
3005	2332406.84	5720204.26	WROUGHT IRON ORNAMENTAL FENCE	11-C-104
3006	2332578.26	5720143.33	WROUGHT IRON ORNAMENTAL FENCE	11-C-105
3007	2332862.84	5720040.59	WROUGHT IRON ORNAMENTAL FENCE	11-C-105
3008	2332903.88	5720037.12	WROUGHT IRON ORNAMENTAL FENCE	11-C-105
3009	2332932.46	5720074.13	WROUGHT IRON ORNAMENTAL FENCE	11-C-105
3010	2332959.21	5720149.40	WROUGHT IRON ORNAMENTAL FENCE	11-C-105
3011	2332951.06	5720159.44	WROUGHT IRON ORNAMENTAL FENCE	11-C-105
3012	2332948.96	5720173.23	WROUGHT IRON ORNAMENTAL FENCE	11-C-105
3013	2332890.08	5720218.70	WROUGHT IRON ORNAMENTAL FENCE	11-C-105
3014	2332751.30	5720268.03	WROUGHT IRON ORNAMENTAL FENCE	11-C-105
3015	2332749.36	5720272.12	WROUGHT IRON ORNAMENTAL FENCE	11-C-105
3016	2332747.74	5720272.70	WROUGHT IRON ORNAMENTAL FENCE	11-C-105
3017	2332743.64	5720270.75	WROUGHT IRON ORNAMENTAL FENCE	11-C-105
3018	2332420.78	5720385.51	WROUGHT IRON ORNAMENTAL FENCE	11-C-104
3019	2332244.73	5720385.45	WROUGHT IRON ORNAMENTAL FENCE	11-C-104
3020	2332177.34	5720381.68	WROUGHT IRON ORNAMENTAL FENCE	11-C-104
3021	2332061.42	5720289.52	WROUGHT IRON ORNAMENTAL FENCE	11-C-103
3022	2331884.37	5720241.48	WROUGHT IRON ORNAMENTAL FENCE	11-C-103
3023	2331879.25	5720244.41	WROUGHT IRON ORNAMENTAL FENCE	11-C-103
3024	2331872.34	5720242.53	WROUGHT IRON ORNAMENTAL FENCE	11-C-103
3025	2331869.41	5720237.42	WROUGHT IRON ORNAMENTAL FENCE	11-C-103
3026	2331742.26	5720202.91	WROUGHT IRON ORNAMENTAL FENCE	11-C-103
3027	2331737.14	5720205.84	WROUGHT IRON ORNAMENTAL FENCE	11-C-103
3028	2331730.24	5720203.97	WROUGHT IRON ORNAMENTAL FENCE	11-C-103
3029	2331725.65	5720195.96	WROUGHT IRON ORNAMENTAL FENCE	11-C-103
3030	2331713.61	5720191.24	WROUGHT IRON ORNAMENTAL FENCE	11-C-103
3031	2331709.46	5720193.05	WROUGHT IRON ORNAMENTAL FENCE	11-C-103
3032	2331707.86	5720192.43	WROUGHT IRON ORNAMENTAL FENCE	11-C-103
3033	2331706.04	5720188.27	WROUGHT IRON ORNAMENTAL FENCE	11-C-103
3034	2331619.36	5720154.24	WROUGHT IRON ORNAMENTAL FENCE	11-C-102
3035	2331615.91	5720155.74	WROUGHT IRON ORNAMENTAL FENCE	11-C-102
3036	2331605.32	5720151.58	WROUGHT IRON ORNAMENTAL FENCE	11-C-102
3037	2331603.82	5720148.14	WROUGHT IRON ORNAMENTAL FENCE	11-C-102
3038	2331540.92	5720123.45	WROUGHT IRON ORNAMENTAL FENCE	11-C-102
3039	2331513.31	5720114.90	WROUGHT IRON ORNAMENTAL FENCE	11-C-102
3040	2331420.14	5720093.43	WROUGHT IRON ORNAMENTAL FENCE	11-C-102
3050	2331770.99	5720012.07	6' HIGH CHAIN LINK FENCE	11-C-103
3051	2331713.42	5720158.72	6' HIGH CHAIN LINK FENCE	11-C-103

90% SUBMITTAL - NOT FOR CONSTRUCTION

NO.	BY	CHK	APP	DATE	REVISIONS AND RECORD OF USE
C	KEZ	RWF	EVB	3/31/2020	90% SUBMITTAL

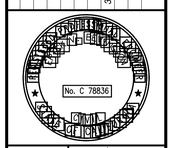

BLACK & VEATCH JOINT VENTURE

BLACK & VEATCH

FILANC

CITY OF MORRO BAY
MORRO BAY WATER
RECLAMATION FACILITY (WRF)

SITE - OVERALL
CIVIL
COORDINATE TABLES

DESIGNED: RBG
DETAILED: SMM
CHECKED:
APPROVED:
DATE:

0 1/2 1
IF THIS BAR DOES NOT MEASURE 1" THEN DRAWING IS NOT TO FULL SCALE

PROJECT NO.
400530

11-C-601
SHEET
OF

FD8000A
D400530
PLOTTED: 3/19/2020 2:36 PM FILE: C:\pw_working\bvw_americas\d0883625\400530-11-C-601.dwg

COORDINATE TABLE - PAVING

POINT NO.	NORTHING	EASTING	ELEVATION	DESCRIPTION	REF DWG
2001	2330949.65	5719960.13	52.24	START CURB, BC	11-C-101
2002	2330964.33	5719980.72	51.45	EC	11-C-101
2003	2330945.89	5720018.04	49.93	START CURB	11-C-101
2004	2330945.97	5720016.77	49.94	BC	11-C-101
2005	2330962.38	5720005.07	51.36	EC	11-C-101
2006	2331152.83	5720032.34	64.89	BC	11-C-101
2007	2331161.55	5720033.82	65.66	EC	11-C-101
2008	2331146.49	5720055.48	64.49	BC	11-C-101
2009	2331159.86	5720057.76	65.26	EC	11-C-101
2010	2331335.68	5720046.10	77.61	BC	11-C-102
2011	2331346.32	5720047.69	78.10	EC	11-C-102
2012	2331333.99	5720070.04	77.22	BC	11-C-102
2013	2331340.93	5720071.07	77.70	EC	11-C-102
2014	2331504.69	5720108.81	82.30	END CURB	11-C-102
2015	2331506.98	5720107.79	82.39	START CURB AND GUTTER	11-C-102
2016	2331514.55	5720109.54	82.61	BC	11-C-102
2017	2331542.93	5720118.33	83.50	EC	11-C-102
2018	2331512.76	5720086.04	83.05	BC	11-C-102
2019	2331535.87	5720073.86	83.72	EC	11-C-102
2020	2331571.80	5720105.49	84.51	EC	11-C-102
2021	2331560.64	5720094.54	84.49	CURB CUT	11-C-102
2022	2331560.49	5720079.56	85.31	BC	11-C-102
2023	2331561.95	5720075.84	85.58	EC	11-C-102
2024	2331568.43	5720073.01	86.00	BC	11-C-102
2025	2331582.39	5720078.49	86.65	START CURB	11-C-102
2026	2331555.18	5720024.67	84.79	BC	11-C-102
2027	2331561.31	5720016.36	85.00	EC	11-C-102
2028	2331598.47	5720037.54	86.65	START CURB	11-C-102
2029	2331586.92	5720032.99	86.37	BC	11-C-102
2030	2331584.34	5720015.88	86.49	EC	11-C-102
2031	2331606.23	5719980.46	86.00	BC	11-C-102
2032	2331639.88	5719975.37	86.15	EC	11-C-102
2033	2331607.20	5719997.60	86.67	BC	11-C-102
2034	2331626.99	5719994.61	86.79	EC	11-C-102
2035	2331627.71	5719994.89	86.88	END CURB	11-C-102
2036	2331644.40	5720005.74	86.92	START CURB	11-C-102
2037	2331645.86	5720002.02	86.92	BC	11-C-102
2038	2331666.19	5720010.00	86.21	EC	11-C-102
2039	2331667.94	5720005.54	86.05	BC	11-C-102
2040	2331669.97	5720003.43	85.95	CURB CUT	11-C-102
2041	2331672.90	5720003.38	86.48	EC	11-C-102
2042	2331706.57	5720016.59	86.18	BC	11-C-103
2043	2331712.22	5720029.55	86.33	EC	11-C-102
2044	2331711.45	5720031.52	86.32	CURB CUT	11-C-102
2045	2331710.76	5720033.27	86.26	CURB CORNER	11-C-102
2046	2331692.15	5720025.97	86.72	CURB CORNER	11-C-103
2047	2331683.64	5720047.64	86.83	END CURB	11-C-102
2048	2331659.63	5720108.81	86.64	START CURB	11-C-102
2049	2331673.59	5720114.29	86.12	BC	11-C-102
2050	2331676.34	5720116.95	86.00	CURB CUT	11-C-102
2051	2331676.42	5720120.77	86.09	EC	11-C-102
2052	2331674.95	5720124.50	86.19	BC	11-C-102
2053	2331649.03	5720135.80	86.88	EC	11-C-102
2054	2331699.01	5720067.33	86.40	VG HP	11-C-102
2055	2331692.79	5720083.16	86.40	VG HP	11-C-102
2056	2331762.88	5720023.65	88.86	CURB CORNER	11-C-103
2057	2331720.13	5720132.56	87.82	CURB CORNER	11-C-103
2058	2331706.21	5720127.10	87.75	BC	11-C-103
2059	2331699.73	5720129.93	87.71	EC	11-C-103
2060	2331698.27	5720133.65	87.69	BC	11-C-103

COORDINATE TABLE - PAVING

POINT NO.	NORTHING	EASTING	ELEVATION	DESCRIPTION	REF DWG
2061	2331709.58	5720159.57	88.73	EC	11-C-103
2062	2331732.17	5720168.44	89.60	BC	11-C-103
2063	2331755.52	5720158.22	91.50	EC	11-C-103
2064	2331778.39	5720099.90	92.30	BC	11-C-103
2065	2331778.60	5720096.92	92.38	EC	11-C-103
2066	2331776.43	5720087.83	92.61	BC	11-C-103
2067	2331776.47	5720085.37	92.67	EC	11-C-103
2068	2331785.28	5720052.92	93.50	CURB CORNER	11-C-103
2069	2332114.05	5720142.15	102.40	CURB CORNER	11-C-103
2070	2332118.19	5720170.65	102.75	CURB CUT	11-C-103
2071	2331737.44	5720194.68	89.92	BC	11-C-103
2072	2331757.98	5720201.48	91.03	BC	11-C-103
2073	2332130.82	5720257.53	102.38	BC	11-C-104
2074	2332136.85	5720270.52	102.56	CURB CUT	11-C-104
2075	2332149.01	5720278.07	102.74	EC	11-C-104
2076	2332198.61	5720291.53	104.14	BC	11-C-104
2077	2332210.88	5720284.49	104.23	EC	11-C-104
2078	2332235.45	5720193.96	104.40	END CURB	11-C-104
2079	2332235.27	5720194.61	104.40	START RIBBON CURB	11-C-104
2080	2332258.44	5720200.87	105.99	END RIBBON CURB	11-C-104
2081	2332322.31	5720217.51	105.99	START RIBBON CURB	11-C-104
2082	2332327.03	5720200.14	106.95	END RIBBON CURB	11-C-104
2083	2332326.38	5720199.97	106.95	START CURB	11-C-104
2084	2332374.64	5720213.06	107.50	CURB CORNER	11-C-104
2085	2332368.44	5720235.89	106.92	END CURB	11-C-104
2086	2332410.05	5720314.19	106.99	START CURB	11-C-104
2087	2332420.67	5720317.08	106.78	CURB CORNER	11-C-104
2088	2332420.28	5720318.52	106.75	END CURB	11-C-104
2089	2332421.88	5720318.96	106.75	2' CURB CUT	11-C-104
2090	2332422.85	5720319.22	106.75	START CURB	11-C-104
2091	2332463.89	5720330.36	109.44	BC	11-C-104
2092	2332490.75	5720329.33	112.43	EC	11-C-104
2093	2332509.42	5720322.69	114.43	BC	11-C-104
2094	2332538.61	5720288.44	117.11	EC	11-C-105
2095	2332126.78	5720303.12	101.73	START VG	11-C-104
2096	2332321.82	5720356.05	104.23	END VG	11-C-104
2097	2332112.11	5720297.58	101.40	BC	11-C-104
2098	2332126.54	5720304.01	101.74	EC, END CURB AND GUTTER	11-C-104
2099	2332126.13	5720305.53	102.11	BC, START CURB	11-C-104
2100	2332134.09	5720312.04	102.20	EC	11-C-104
2101	2332139.87	5720317.86	102.48	BC	11-C-104
2102	2332162.06	5720330.82	103.31	EC	11-C-104
2103	2332187.58	5720337.75	103.92	END CURB	11-C-104
2104	2332249.46	5720354.54	104.45	START CURB	11-C-104
2105	2332277.20	5720362.07	104.69	BC	11-C-104
2106	2332303.08	5720362.15	104.76	EC	11-C-104
2107	2332311.01	5720360.05	104.73	BC	11-C-104
2108	2332321.17	5720358.46	104.73	EC, END CURB	11-C-104
2109	2332321.58	5720356.94	104.50	BC, START CURB AND GUTTER	11-C-104
2110	2332337.29	5720358.69	104.87	EC	11-C-104
2111	2332403.46	5720376.65	105.88	BC	11-C-104
2112	2332432.40	5720375.54	106.22	BC	11-C-105
2113	2332542.87	5720265.27	117.35	BC	11-C-105
2114	2332541.84	5720252.37	117.13	EC	11-C-105
2115	2332532.70	5720226.65	116.70	CURB CUT	11-C-105
2116	2332531.70	5720223.83	116.75	END CURB	11-C-105
2117	2332550.86	5720217.02	117.00	START CURB	11-C-105
2118	2332560.28	5720213.67	117.40	CURB CUT	11-C-105
2119	2332598.44	5720200.10	119.00	END CURB	11-C-105
2120	2332640.84	5720185.03	119.89	START CURB	11-C-105

COORDINATE TABLE - PAVING

POINT NO.	NORTHING	EASTING	ELEVATION	DESCRIPTION	REF DWG
2121	2332646.49	5720183.02	120.00	END CURB	11-C-105
2122	2332741.69	5720144.79	126.10	START CURB	11-C-105
2123	2332743.10	5720144.28	125.75	CURB CUT	11-C-105
2124	2332810.97	5720120.04	130.27	END CURB	11-C-105
2125	2332816.15	5720118.19	130.40	CURB CUT	11-C-105
2126	2332816.67	5720118.00	130.43	START CURB	11-C-105
2127	2332882.16	5720094.60	134.28	END CURB	11-C-105
2128	2332910.85	5720091.71	134.12	START CURB	11-C-105
2129	2332924.98	5720086.69	134.42	CURB CORNER	11-C-105
2130	2332881.48	5720215.92	130.62	BC	11-C-105
2131	2332892.39	5720209.97	130.92	EC	11-C-105
2132	2332940.48	5720172.84	133.22	END CURB AND GUTTER	11-C-105
2133	2332941.39	5720174.03	133.12	BC, START CURB	11-C-105
2134	2332948.01	5720151.50	134.02	EC	11-C-105
2135	2332777.98	5720220.52	125.50	START CURB	11-C-105
2136	2332796.13	5720217.60	127.01	END CURB	11-C-105
2137	2332760.89	5720172.46	125.81	START CURB	11-C-105
2138	2332780.89	5720174.73	126.94	END CURB	11-C-105

CURVE DATA TABLE

CURVE	TANGENT (FT)	LENGTH (FT)	RADIUS (FT)	DELTA (°)	REF DWG
1	16.31	27.37	20.00	78.41	11-C-101
2	15.94	23.05	13.00	101.59	11-C-101
3	4.44	8.86	45.00	11.28	11-C-101
4	6.81	13.59	69.00	11.28	11-C-101
5	5.40	10.77	69.00	8.94	11-C-102
6	3.52	7.02	45.00	8.94	11-C-102
7	14.90	29.74	201.50	8.46	11-C-102
8	17.25	28.46	20.00	81.54	11-C-102
9	20.00	31.42	20.00	90.00	11-C-102
10	5.00	7.85	5.00	90.00	11-C-102
11	5.35	10.45	20.00	29.93	11-C-102
12	17.29	20.93	10.00	119.91	11-C-102
13	19.66	35.64	34.00	60.07	11-C-102
14	11.56	20.97	20.00	60.07	11-C-102
15	3.83	6.02	3.83	90.00	11-C-102
16	10.00	15.71	10.00	90.00	11-C-102
17	5.00	7.85	5.00	90.00	11-C-102
18	20.00	31.42	20.00	90.00	11-C-102
19	5.00	7.85	5.00	90.00	11-C-103
20	20.00	31.42	20.00	90.00	11-C-103
21	18.05	28.32	18.00	90.16	11-C-103
22	1.57	3.04	5.00	34.81	11-C-103
23	1.27	2.49	5.00	28.56	11-C-103
24	10.84	21.65	198.50	6.25	11-C-103
25	16.41	29.04	25.00	66.55	11-C-104
26	10.00	15.71	10.00	90.00	11-C-104
27	14.08	27.29	45.00	34.75	11-C-104
28	7.99	15.86	51.50	17.65	11-C-104
29	5.17	10.30	50.00	11.81	11-C-104
30	13.30	25.99	50.00	28.78	11-C-104
31	13.40	26.18	50.00	30.00	11-C-104
32	5.17	10.30	50.00	11.81	11-C-104
33	7.99	15.86	51.50	17.65	11-C-104
34	15.18	29.42	48.50	34.75	11-C-104
35	25.98	47.12	45.00	60.00	11-C-105
36	6.70	13.09	25.00	30.00	11-C-105
37	6.29	12.48	39.50	18.11	11-C-105
38	14.50	25.10	20.00	71.89	11-C-105

NO.	BY	CHK	APP	DATE	REVISIONS AND RECORD OF USE
C	KEZ	RWF	EVB	3/31/2020	90% SUBMITTAL

REGISTERED PROFESSIONAL ENGINEER — No. C 78836 — CIVIL — STATE OF CALIFORNIA

BLACK & VEATCH JOINT VENTURE — BLACK & VEATCH — FILANC

CITY OF MORRO BAY
MORRO BAY WATER RECLAMATION FACILITY (WRF)

SITE - OVERALL CIVIL COORDINATE TABLES

DESIGNED: RBG
DETAILED: SMM
CHECKED:
APPROVED:
DATE:

0 1/2 1
IF THIS BAR DOES NOT MEASURE 1" THEN DRAWING IS NOT TO FULL SCALE

PROJECT NO. 400530

11-C-602
SHEET OF

90% SUBMITTAL - NOT FOR CONSTRUCTION

FD9000A
D400530
PLOTTED: 3/19/2020 2:37 PM FILE: C:\pw_working\bvw_americas\d0683625\400530-11-C-602.dwg

PIPE, EQUIPMENT & VALVE TAG LEGEND

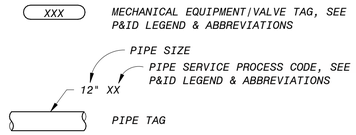

PIPE & FITTINGS SYMBOL LEGEND

DOUBLE LINE

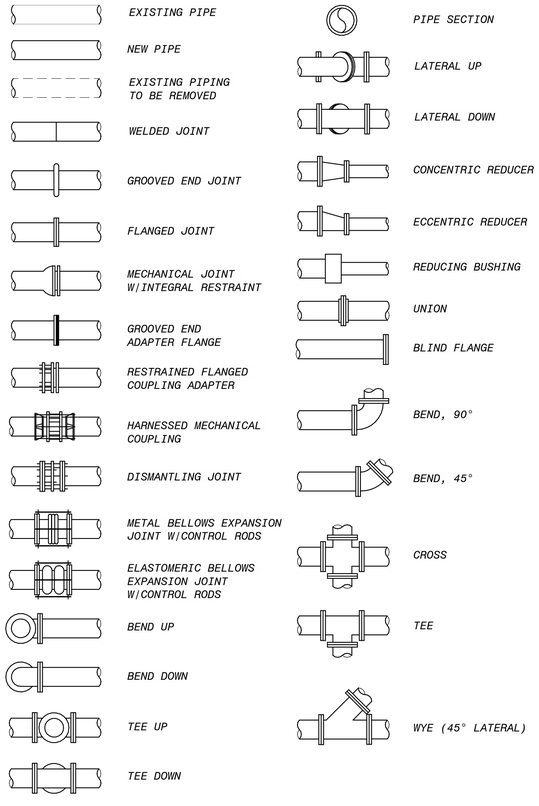

SINGLE LINE

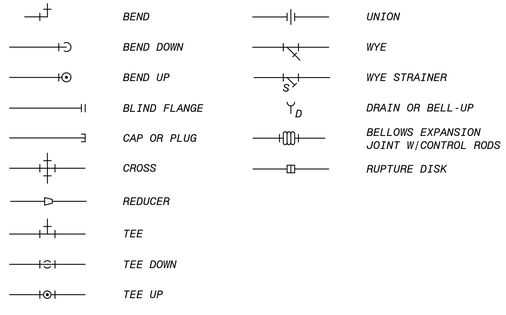

VALVE SYMBOL LEGEND

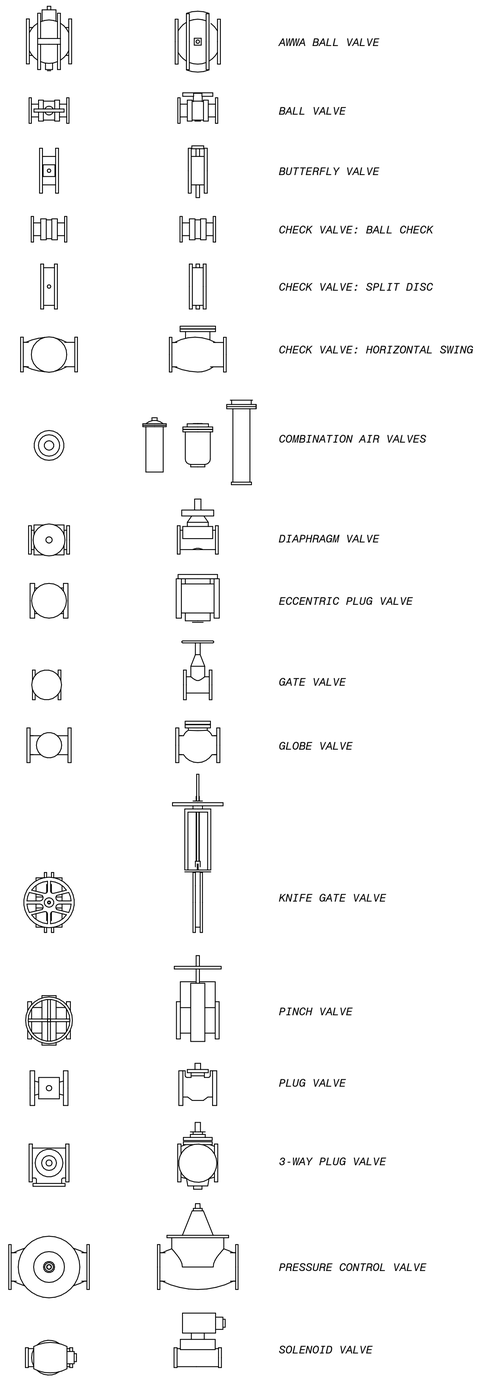

GENERAL PROCESS MECHANCAL NOTES

1. LEGENDS SHOWN IN THIS DRAWING ARE BASED ON A TEMPLATE THAT IS NOT PROJECT SPECIFIC. SOME LEGEND SYMBOLS ARE NOT USED ON THIS PROJECT, BUT ARE SHOWN TO PROVIDE A DICTIONARY FOR SYMBOLS THAT MAY ALSO BE USED DURING THE PROJECT CONSTRUCTION PHASE.
2. FOR PROCESS MECHANICAL ABBREVIATIONS, REFER TO P&ID LEGEND AND ABBREVIATIONS.
3. REFER TO THE P&ID LEGEND AND ABBREVIATIONS FOR SINGLE-LINE VALVE, GATE, ACTUATOR, FITTING, EQUIPMENT, AND OTHER SYMBOLS.
4. FITTING TYPES IN THE LEGEND ON THIS SHEET SHOW FLANGED END CONNECTIONS. FITTINGS FOR OTHER END CONNECTION TYPES ARE SIMILAR.
5. VALVE TYPES IN THE LEGEND ON THIS SHEET REPRESENT THE TYPICAL APPEARANCE FOR EACH TYPE OF VALVE. THE ACTUAL VALVES USED FOR THIS PROJECT MAY VARY IN APPEARANCE.
6. LAY PIPE TO UNIFORM GRADE BETWEEN INDICATED ELEVATION POINTS.
7. SIZE OF FITTINGS SHOWN ON DRAWINGS SHALL MATCH CONNECTING PIPING, UNLESS OTHERWISE INDICATED. TYPE OF JOINT AND FITTING MATERIAL SHALL BE THE SAME AS CONNECTING PIPING.
8. ALL REQUIRED HANGERS, SUPPORTS, BRACES, INSERTS, AND ACCESSORIES ARE NOT SHOWN ON THE DRAWINGS. PIPE SUPPORTS LOCATIONS AND DESIGN WILL BE COMPLETED DURING THE SHOP DRAWINGS.
9. ALL PRESSURIZED OR SURCHARGED PIPELINES, PIPE FITTINGS, COUPLINGS, JOINTS, EXPANSION JOINTS, TANK CONNECTIONS, AND CHANNEL CONNECTIONS SHALL BE PROVIDED WITH THRUST RESTRAINT BASED ON SPECIFIED PRESSURES AND TEMPERATURES.
10. NUMBER AND LOCATION OF UNIONS AND COUPLINGS SHOWN ON DRAWINGS IS ONLY APPROXIMATE. CONTRACTOR SHALL PROVIDE ALL UNIONS AND COUPLINGS REQUIRED BY THE SPECIFICATIONS AND AS NECESSARY TO FACILITATE CONVENIENT REMOVAL OF VALVES AND MECHANICAL EQUIPMENT.
11. ORIENT VALVES AS SPECIFIED.

90% SUBMITTAL - NOT FOR CONSTRUCTION

NO.	BY	CHK	APP	DATE	REVISIONS AND RECORD OF USE
A	KEZ	RWF	EVB	3/31/2020	90% SUBMITTAL

REGISTERED PROFESSIONAL ENGINEER — DREW V. REYNOLDS — No. C 76836 — STATE OF CALIFORNIA

BLACK & VEATCH

JOINT VENTURE

BLACK & VEATCH

FILANC

CITY OF MORRO BAY
MORRO BAY WATER
RECLAMATION FACILITY (WRF)

GENERAL
CIVIL-MECHANICAL
LEGENDS AND GNERAL NOTES

DESIGNED: KEZ
DETAILED: JPS
CHECKED:
APPROVED:
DATE:

0 1/2 1
IF THIS BAR DOES NOT MEASURE 1" THEN DRAWING IS NOT TO FULL SCALE

PROJECT NO.
400530

00-M-500
SHEET
OF XXX

PLOTTED: 3/24/2020 3:12:02 PM
D400530

MECHANICAL TIE ROD SCHEDULE						
		TIE RODS		PIPE SPACERS		
PIPE SIZE (INCHES)	MINIMUM PRESSURE (PSI) (NOTE 1)	NO. OF RODS (NOTE 2)	DIA OF RODS (INCHES)	DIA OF SPACERS (INCHES)	LENGTH=C (INCHES)	PIPE SCHEDULE
4	350 OR LESS	2	3/4	1	2 1/2	40
6	250 OR LESS 350	2 4	3/4	1	2 1/2	40
8	150 OR LESS 300 350	2 4 6	3/4	1	2 1/2	40
10	200 OR LESS 350	2 4	3/4	1	2 1/2	80
12	150 OR LESS 300 350	2 4 6	3/4	1	2 1/2	80
14	100 OR LESS 200 350	2 4 6	3/4	1	3 1/2	80
16	150 OR LESS 250 350	4 6 8	3/4	1	3 1/2	80
18	150 OR LESS 200 300 350	4 6 8 10	3/4	1	3 1/2	80
20	100 OR LESS 150 200 300 350	4 6 8 10 12	3/4	1	3 1/2	80
24	100 OR LESS 150 200 250 300 350	6 8 10 12 14 16	3/4	1	3 1/2	80
30	100 OR LESS 150 200 250	8 10 12 16	1	1 1/4	4	80
36	100 OR LESS 150 200 250	8 12 18 22	1	1 1/4	4	80
42	100 OR LESS 150 200 250	8 12 16 20	1 1/4	1 1/2	4	80
48	100 OR LESS 150 200 250	12 16 22 28	1 1/4	1 1/2	4	80

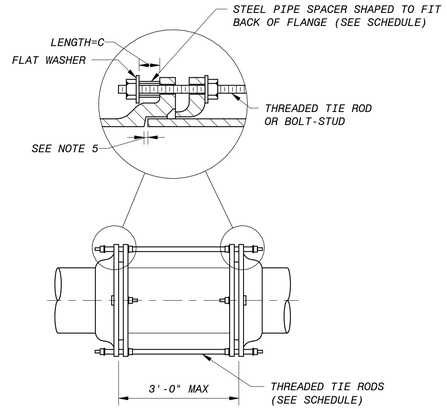

NOTES :

1. PRESSURE SHALL BE THE PRESSURE AT WHICH THE PIPE IS HYDROSTATICALLY TESTED, OR IF THERE IS NO HYDROSTATIC FIELD TEST, IT SHALL BE THE SPECIFIED SHOP TEST PRESSURE.
2. UNLESS OTHERWISE INDICATED, TIE RODS SHALL BE SPACED UNIFORMLY AROUND THE PIPE, BEGINNING WITH THE FIRST TWO AT THE HORIZONTAL CENTERLINE OF THE PIPE, SUBJECT TO THE APPROVAL OF THE ENGINEER.
3. EXCEPT WHERE TIE RODS ARE REQUIRED, BOLTS FOR FOLLOWER RINGS SHALL BE TEE HEAD BOLTS.
4. AT CONTRACTOR'S OPTION, 4" THROUGH 48" MAY BE FURNISHED AS MECHANICAL JOINT STYLE WITH TIE RODS, OR POSITIVE LOCKING SEGMENTS AND/OR RINGS SUCH AS AMERICAN PIPE 14" THROUGH 36" SIZE MAY BE FURNISHED AS FLEX RING STYLE RESTRAINED JOINTS AND 42" THROUGH 64" SIZE MAY BE FURNISHED AS LOC RING STYLE RESTRAINED JOINTS, OR U.S. PIPE "TR-FLEX", OR GRIFFIN PIPE "SNAP-LOCK".
5. FOR PIPING FLEXIBILITY, PROVIDE GAP LARGE ENOUGH TO FACILITATE PIPE ASSEMBLY AND DISASSEMBLY AT ASSOCIATED FLANGED PIPE JOINTS.

A DIP MECHANICAL JOINT COUPLING WITH TIE RODS

NO SCALE

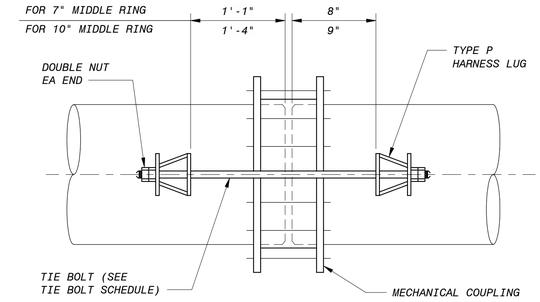

NOTE :

1. THE PIPE FOR LUG DESIGN SHALL INCLUDE WRAPPERS OR PADS OR THE PIPE WALL THICKNESS INCREASED AS REQUIRED TO MEET MINIMUM PIPE THICKNESS IN ACCORDANCE WITH AWWA M-11 DESIGN REQUIREMENTS.

B STEEL PIPE HARNESSED MECHANICAL COUPLING WITH TYPE P LUGS

NO SCALE

DIMENSIONS IN INCHES									
TIE BOLT DIAMETER	T	A	Y	W	X	HB	E	HF	HOLE DIAMETER
5/8	3/8	5	5	1 3/8	5	3 7/8	3	2	3/4
3/4	3/8	5	5	1 1/2	5	4 1/8	3 1/8	2	7/8
7/8	1/2	5 1/2	5	1 5/8	5	4 1/4	3 1/8	2	1
1	1/2	5 3/4	RING	1 3/4	RING	4 1/2	3 1/4	2	1 1/8
1 1/8	1/2	7	RING	1 7/8	RING	4 3/4	3 5/8	2 1/2	1 1/4
1 1/4	5/8	7 1/2	RING	2	RING	5	3 3/4	2 1/2	1 3/8
1 3/8	5/8	8 3/4	RING	2 1/8	RING	5 3/8	3 3/4	2 1/2	1 1/2
1 1/2	3/4	10	RING	2 1/4	RING	5 1/2	3 7/8	2 1/2	1 5/8
1 5/8	3/4	10 3/4	RING	2 3/8	RING	5 5/8	3 7/8	2 1/2	1 3/4
1 3/4	7/8	12	RING	2 1/2	RING	5 7/8	4	2 1/2	1 7/8
1 7/8	7/8	13	RING	2 5/8	RING	6	4	2 1/2	2
2	1	14	RING	2 3/4	RING	6 1/4	4 1/4	2 1/2	2 1/8
2 1/4	1	15 3/4	RING	3	RING	6 3/4	4 5/16	2 1/2	2 3/8

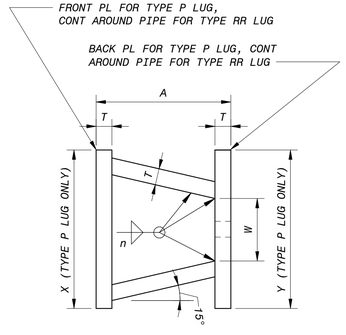

NOTES :

1. n = PIPE WALL THICKNESS.
2. FOR HARNESS LUG TYPE RR, THE GUSSET PLATES BETWEEN THE FRONT PLATE AND THE BACK PLATE MAY BE PERPENDICULAR TO THE FRONT AND BACK PLATES WITH A MINIMUM CLEAR DISTANCE BETWEEN EACH PAIR OF GUSSET PLATES OF DIMENSION W.

C STEEL PIPE HARNESS LUGS

NO SCALE

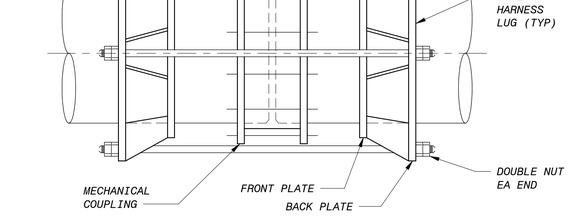

NOTES :

1. THE PIPE FOR LUG DESIGN SHALL INCLUDE WRAPPERS OR PADS OR THE PIPE WALL THICKNESS INCREASED AS REQUIRED TO MEET MINIMUM PIPE THICKNESS IN ACCORDANCE WITH AWWA M-11 DESIGN REQUIREMENTS.
2. WHERE HARNESS LUGS ARE SPECIFIED FOR VERTICAL TURBINE PUMP DISCHARGE OUTLETS, THE NUMBER AND SIZE OF THE TIE RODS FOR THE HARNESS COUPLING MUST EQUAL THE AREA OF THE CONNECTING STEEL PIPE WALL. CONTRACTOR SHALL COORDINATE THIS DESIGN REQUIREMENT WITH THE PUMP AND PIPE MANUFACTURERS.

D STEEL PIPE HARNESSED MECHANICAL COUPLING WITH TYPE RR LUGS

NO SCALE

NO.	BY	CHK	APP	DATE	REVISIONS AND RECORD OF USE
B	KEZ	RWF	EVB	3/31/2020	90% SUBMITTAL
A	KEZ	RT	EVB	7/30/2019	60% SUBMITTAL

REGISTERED PROFESSIONAL ENGINEER — DEREK V. REYNOLDS — No. C 76836 — STATE OF CALIFORNIA — CIVIL

BLACK & VEATCH

JOINT VENTURE

BLACK & VEATCH

FILANC

CITY OF MORRO BAY
MORRO BAY WATER
RECLAMATION FACILITY (WRF)

GENERAL
CIVIL-MECHANICAL
DETAILS

DESIGNED: KEZ
DETAILED: MAK
CHECKED:
APPROVED:
DATE:

0 1/2 1
IF THIS BAR DOES NOT MEASURE 1" THEN DRAWING IS NOT TO FULL SCALE

PROJECT NO.
400530

00-M-501
SHEET
OF XXX

90% SUBMITTAL - NOT FOR CONSTRUCTION

PLOTTED: 3/24/2020 3:12:06 PM
D400530

STEEL PIPE TIE BOLT SCHEDULE FOR HARNESSED JOINTS

NOMINAL PIPE SIZE (INCHES)	PRESSURE (psi) (NOTE 1)	LUG TYPE	TIE BOLT DIA (INCHES)	NO. BOLTS (NOTE 3)
6	250 OR LESS	P	5/8	2
8	250 OR LESS	P	5/8	2
10	50	P	5/8	2
	100	P	5/8	2
	150	P	5/8	2
	200	P	3/4	2
	250	P	3/4	2
12	50	P	5/8	2
	100	P	5/8	2
	150	P		2
	200	P	3/4	2
	250	P	7/8	2
14	50	RR	5/8	2
	100	RR	5/8	2
	150	RR	3/4	2
	200	RR	7/8	2
	250	RR	1	2
16	50	RR	5/8	2
	100	RR	3/4	2
	150	RR	7/8	2
	200	RR	1	2
	250	RR	1 1/8	2
18	50	RR	5/8	2
	100	RR	7/8	2
	150	RR	1	2
	200	RR	1 1/4	2
	250	RR	1 1/4	2
20	50	RR	5/8	2
	100	RR	7/8	2
	150	RR	1 1/8	2
	200	RR	1 1/4	2
	250	RR	1	4
24	50	RR	3/4	2
	100	RR	3/4	4
	150	RR	1	4
	200	RR	1 1/8	4
	250	RR	1 1/4	4
30	50	RR	3/4	4
	100	RR	1	4
	150	RR	1 1/8	4
	200	RR	1 1/4	4
	250	RR	1 1/2	4
36	50	RR	7/8	4
	100	RR	1 1/8	4
	150	RR	1 3/8	4
	200	RR	1 1/4	6
	250	RR	1 3/8	6
42	50	RR	7/8	4
	100	RR	1 1/4	4
	150	RR	1 1/4	6
	200	RR	1 1/2	6
	250	RR	1 3/4	6
48	50	RR	1	4
	100	RR	1 1/2	4
	150	RR	1 1/2	6
	200	RR	1 3/4	6
	250	RR	2	6
54	50	RR	1 1/8	4
	100	RR	1 3/8	4
	150	RR	1 3/4	6
	200	RR	2	6
	250	RR	1 3/4	8
60	50	RR	1 1/4	4
	100	RR	1 1/2	6
	150	RR	1 1/2	8
	200	RR	1 3/4	8
	250	RR	1 3/4	10
66	50	RR	1 3/8	4
	100	RR	1 3/4	6
	150	RR	1 3/4	8
	200	RR	1 3/4	10
	250	RR	1 3/4	12
72	50	RR	1 1/4	6
	100	RR	1 1/2	8
	150	RR	2	8
	200	RR	2	10
	250	RR	2	12
78	50	RR	1 3/8	6
	100	RR	2	6
	150	RR	2	8
	200	RR	2	10
	250	RR	2 1/4	12
84	50	RR	1 1/2	6
	100	RR	1 3/4	8
	150	RR	2	10
	200	RR	2	12
	250	RR	2 1/4	14
90	50	RR	1 1/2	6
	100	RR	2	8
	150	RR	2	10
	200	RR	2 1/4	12
	250	RR	2 1/4	14
96	50	RR	1 3/4	6
	100	RR	2	8
	150	RR	2 1/4	10
	200	RR	2 1/4	12
	250	RR	2 1/4	16

NOTES :

1. PRESSURE SHALL BE THE PRESSURE AT WHICH THE PIPE IS HYDROSTATICALLY TESTED, OR IF THERE IS NO HYDROSTATIC FIELD TEST, IT SHALL BE THE SPECIFIED SHOP TEST PRESSURE.
2. NUMBER OF TIE BOLTS IS BASED ON AN ALLOWABLE STRESS ON NET TENSION AREA OF 40,000 PSI.
3. UNLESS OTHERWISE INDICATED, TIE BOLTS SHALL BE SPACED UNIFORMLY AROUND THE PIPE, BEGINNING WITH THE FIRST TWO AT THE HORIZONTAL CENTERLINE OF THE PIPE, SUBJECT TO THE APPROVAL OF THE ENGINEER.

A STEEL PIPE TIE BOLT SCHEDULE FOR HARNESSED JOINTS
NO SCALE

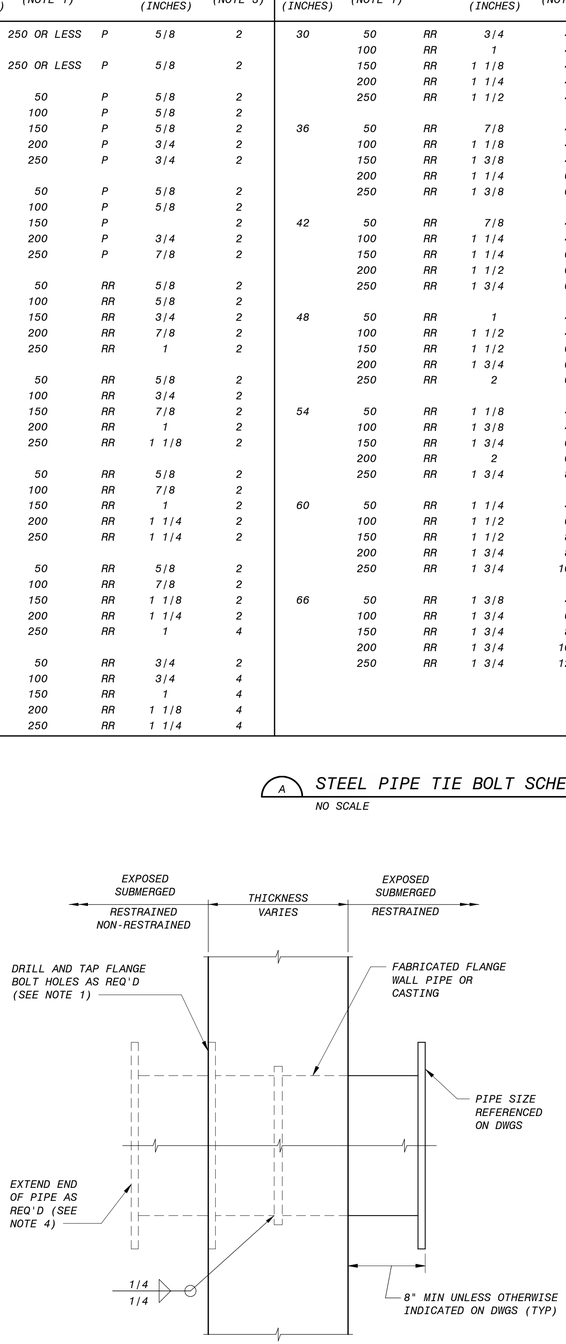

NOTES :

1. WALL PIPE MATERIAL SHALL BE DUCTILE IRON, STEEL OR AS INDICATED ON THE DRAWINGS. STEEL PIPE SHALL BE SCHEDULE 40 FOR PIPE 20 INCHES AND SMALLER, 3/8" FOR PIPE LARGER THAN 20", AND COATINGS SAME AS CONNECTING PIPE.
2. IF CONNECTING STEEL PIPE THICKNESS IS GREATER THAN 3/8", STEEL WALL PIPE THICKNESS SHALL BE INCREASED TO MATCH CONNECTING PIPE.
3. ANNULAR COLLAR SHALL BE SAME MATERIAL AS PIPE, 1/4" X 2" FOR PIPE 20" AND SMALLER, AND 3/8" X 3" FOR PIPE LARGER THAN 20".
4. WALL PIPE MAY BE FLUSH WITH FACE OF WALL OR EXTENDED WITH END AS REQUIRED OR INDICATED ON DRAWINGS.
5. WALL PIPE SHALL BE ORIENTED SO THAT THE BOLT HOLES STRADDLE THE TOP CENTERLINE.

B FLANGED WALL PIPE
NO SCALE

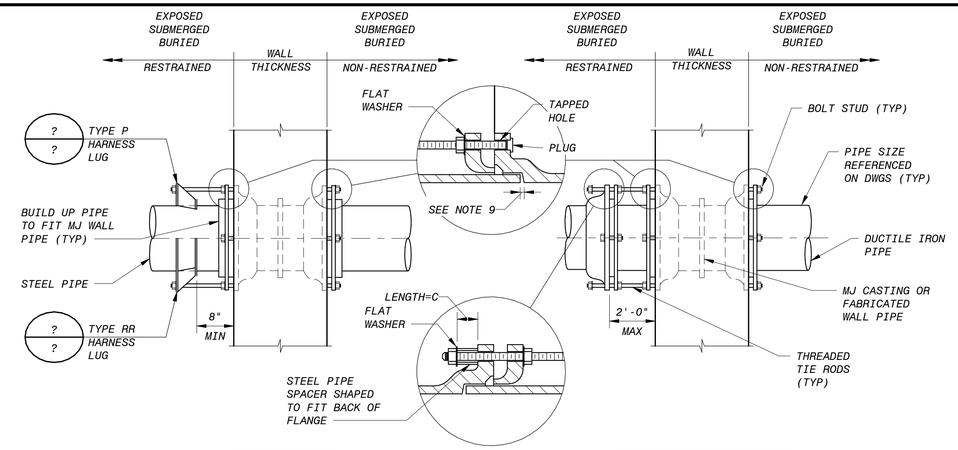

STEEL PIPE

DUCTILE IRON PIPE

NOTES :

1. MECHANICAL JOINT OR PUSH-ON STYLE FITTINGS MAY BE FURNISHED WHERE RESTRAINED JOINTS ARE NOT CALLED FOR ON THE DRAWINGS OR PIPE SCHEDULE.
2. PRESSURE SHALL BE THE PRESSURE AT WHICH THE PIPE IS HYDROSTATICALLY TESTED, OR IF THERE IS NO HYDROSTATIC FIELD TEST, IT SHALL BE THE SPECIFIED SHOP TEST PRESSURE.
3. UNLESS OTHERWISE INDICATED, TIE RODS SHALL BE SPACED UNIFORMLY AROUND THE PIPE, BEGINNING WITH THE FIRST TWO AT THE HORIZONTAL CENTERLINE OF THE PIPE, SUBJECT TO THE APPROVAL OF THE ENGINEER.
4. EXCEPT WHERE TIE RODS ARE REQUIRED, BOLTS FOR FOLLOWER RINGS SHALL BE BOLT-STUDS ON WALL PIPE. ALL BOLT HOLES IN WALL PIPE SHALL BE TAPPED. WALL PIPES SHALL BE ORIENTED SO THAT THE BOLT HOLES STRADDLE THE TOP CENTERLINE.
5. AT CONTRACTOR'S OPTION, 4" THROUGH 48" MAY BE FURNISHED AS MECHANICAL JOINT STYLE WITH TIE RODS, OR POSITIVE LOCKING SEGMENTS AND/OR RINGS SUCH AS AMERICAN JOINT STYLE PIPE 14" THROUGH 36" SIZE MAY BE FURNISHED AS FLEX RING STYLE RESTRAINED JOINTS AND 42" THROUGH 64" SIZE MAY BE FURNISHED AS LOC RING STYLE RESTRAINED JOINTS, OR U.S. PIPE "TR-FLEX", OR GRIFFIN PIPE "SNAP-LOCK".
6. FOR BURIED PIPING, CONTRACTOR SHALL PROVIDE AN ADDITIONAL FIELD JOINT AS CLOSE AS PRACTICAL TO FACE OF WALL, BUT NO MORE THAN 5 FEET.
7. USE WAX TAPE TO PROTECT ALL BURIED FERROUS SURFACES, INCLUDING PAINTED SURFACES. FOR PROTECTION OF ADJACENT PIPE BARREL SURFACES, SHRINK WRAP MAY BE USED IN LIEU OF WAX TAPE. SEE SPECIFICATIONS.
8. WHERE PIPE IS REQUIRED ON ONE SIDE ONLY, PROVIDE MJxPE WALL PIPE.
9. FOR PIPING FLEXIBILITY, PROVIDE GAP LARGE ENOUGH TO FACILITATE PIPE ASSEMBLY AND DISASSEMBLY AT ASSOCIATED FLANGE PIPE JOINTS.

MECHANICAL JOINT TIE ROD SCHEDULE

NOMINAL PIPE SIZE (INCHES)	MAX PRESSURE (PSI) (NOTE 2)	TIE BOLTS		PIPE SPACERS		
		NO. OF RODS (NOTE 3)	DIA OF RODS (INCHES)	DIA (INCHES)	LENGTH (INCHES)	PIPE SCHEDULE
4	350 OR LESS	2	3/4	1	2 1/2	40
6	250 OR LESS 350	2 4	3/4	1	2 1/2	40
8	150 OR LESS 300 350	2 4 6	3/4	1	2 1/2	40
10	200 OR LESS 350	2 4	3/4	1	2 1/2	80
12	150 OR LESS 300 350	2 4 6	3/4	1	2 1/2	80
14	100 OR LESS 200 350	2 4 6	3/4	1	3 1/2	80
16	150 OR LESS 250 350	4 6 8	3/4	1	3 1/2	80
18	150 OR LESS 200 300 350	4 6 8 10	3/4	1	3 1/2	80
20	100 OR LESS 150 200 300 350	4 6 8 10 12	3/4	1	3 1/2	80
24	100 OR LESS 150 200 250 300 350	6 8 10 12 14 16	3/4	1	3 1/2	80
30	100 OR LESS 150 200 250	8 10 12 16	1	1 1/4	4	80
36	100 OR LESS 150 200 250	8 12 18 22	1	1 1/4	4	80
42	100 OR LESS 150 200 250	8 12 16 20	1 1/4	1 1/2	4	80
48	100 OR LESS 150 200 250	12 16 22 28	1 1/4	1 1/2	4	80

C MECHANICAL JOINT WALL PIPE WITH TIE RODS
NO SCALE

90% SUBMITTAL - NOT FOR CONSTRUCTION

NO.	BY	CHK	APP
B	KEZ	RWF	EVB
A	KEZ	RT	EVB

DATE	REVISIONS AND RECORD OF USE
3/31/2020	90% SUBMITTAL
7/30/2019	60% SUBMITTAL

REGISTERED PROFESSIONAL ENGINEER — ERIK V. REYNOLDSON — No. C 76836 — STATE OF CALIFORNIA

BLACK & VEATCH JOINT VENTURE — BLACK & VEATCH — FILANC

CITY OF MORRO BAY
MORRO BAY WATER RECLAMATION FACILITY (WRF)

GENERAL
CIVIL-MECHANICAL DETAILS

DESIGNED: KEZ
DETAILED: MAK
CHECKED:
APPROVED:
DATE:

0 1/2 1
IF THIS BAR DOES NOT MEASURE 1" THEN DRAWING IS NOT TO FULL SCALE

PROJECT NO. 400530

00-M-502
SHEET
OF XXX

PLOTTED: 3/24/2020 3:12:09 PM
D400530

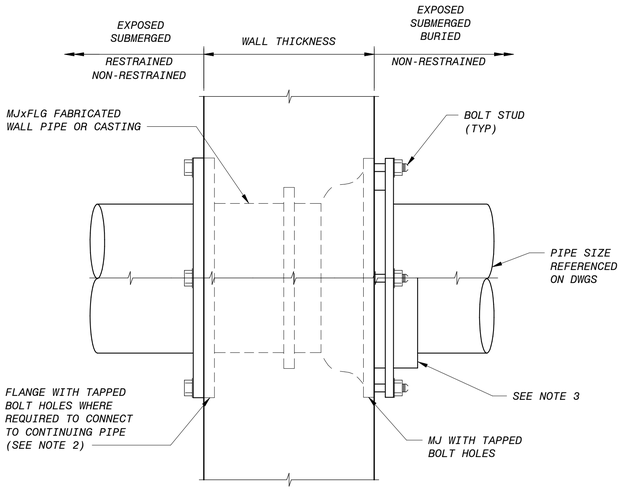

NOTES :

1. WALL PIPE SHALL BE ORIENTED SO THAT THE BOLT HOLES STRADDLE THE TOP CENTERLINE.
2. WHERE PIPE IS REQUIRED ON ONE SIDE ONLY, PROVIDE MJxPE WALL PIPE.
3. FOR STEEL PIPE APPLICATIONS BUILD UP END OF STEEL PIPE TO FIT MJ WALL PIPE.
4. FOR BURIED PIPING, CONTRACTOR SHALL PROVIDE AN ADDITIONAL FIELD JOINT AS CLOSE AS PRACTICAL TO FACE OF WALL, BUT NO MORE THAN 5 FEET.
5. USE WAX TAPE TO PROTECT ALL BURIED FERROUS SURFACES, INCLUDING PAINTED SURFACES. FOR PROTECTION OF ADJACENT PIPE BARREL SURFACES, SHRINK WRAP MAY BE USED IN LIEU OF WAX TAPE. SEE SPECIFICATIONS.

A FLANGED-MECHANICAL JOINT WALL PIPE

NO SCALE

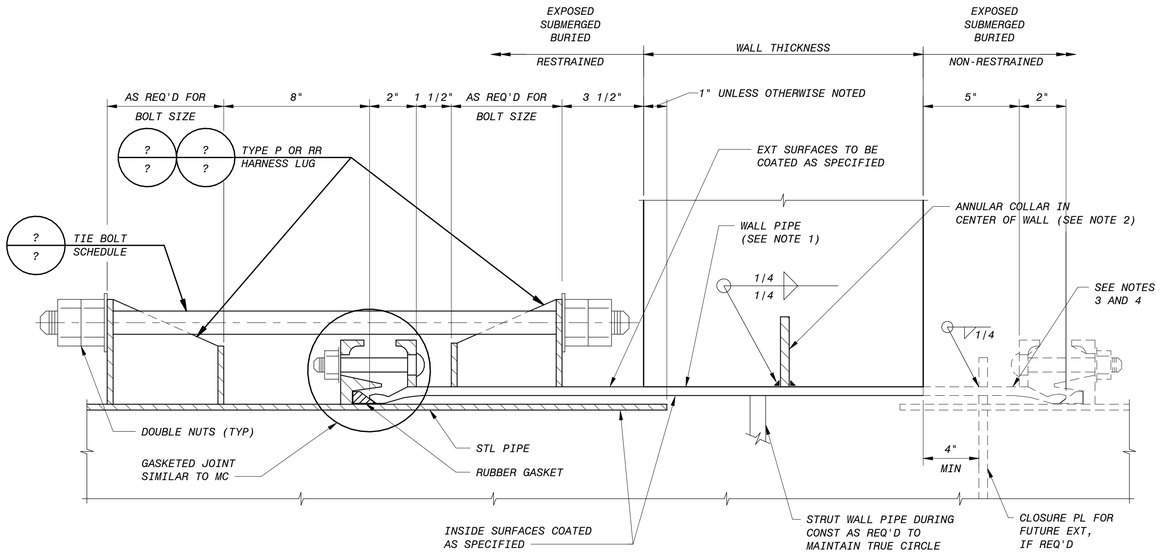

C HARNESSED WALL PIPE FOR STEEL PIPE

NO SCALE

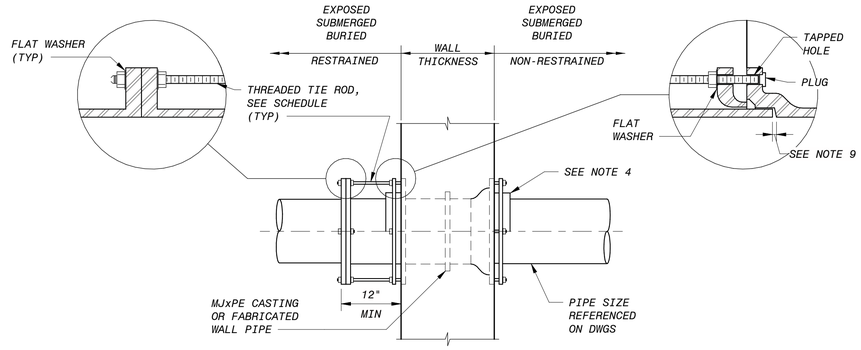

TIE ROD SCHEDULE			
NOMINAL PIPE SIZE (INCHES)	MAX PRESSURE (PSI) (NOTE 1)	TIE BOLTS	
		NO. OF RODS (NOTE 2)	DIA OF RODS (INCHES)
6	250 OR LESS	2	3/4
8	150 OR LESS	2	3/4
10	200 OR LESS 350	2 6	3/4
12	150 OR LESS 300	2 4	3/4
14	100 OR LESS 200	2 4	3/4
16	75 OR LESS 150	2 4	3/4
18	75 OR LESS 150	2 4	3/4
20	50 OR LESS	2	3/4
24	75	4	3/4
30	50 OR LESS	4	1
36	50 OR LESS 100	4 8	1
42	50 OR LESS	4	1 1/4

NOTES :

1. PRESSURE SHALL BE THE PRESSURE AT WHICH THE PIPE IS HYDROSTATICALLY TESTED, OR IF THERE IS NO HYDROSTATIC FIELD TEST, IT SHALL BE THE SPECIFIED SHOP TEST PRESSURE.
2. UNLESS OTHERWISE INDICATED, TIE RODS SHALL BE SPACED UNIFORMLY AROUND THE PIPE, BEGINNING WITH THE FIRST TWO AT THE HORIZONTAL CENTERLINE OF THE PIPE, SUBJECT TO THE APPROVAL OF THE ENGINEER.
3. EXCEPT WHERE TIE RODS ARE REQUIRED, BOLTS FOR FOLLOWER RINGS SHALL BE BOLT-STUDS ON WALL PIPE. ALL BOLT HOLES IN WALL PIPE SHALL BE TAPPED. WALL PIPES SHALL BE ORIENTED SO THAT THE BOLT HOLES STRADDLE THE TOP CENTERLINE.
4. FOR STEEL PIPE APPLICATIONS, BUILD UP END OF STEEL PIPE TO FIT MJ WALL PIPE.
6. FOR BURIED PIPING, CONTRACTOR SHALL PROVIDE AN ADDITIONAL FIELD JOINT AS CLOSE AS PRACTICAL TO FACE OF WALL, BUT NO MORE THAN 5 FEET.
7. USE WAX TAPE TO PROTECT ALL BURIED FERROUS SURFACES, INCLUDING PAINTED SURFACES. FOR PROTECTION OF ADJACENT PIPE BARREL SURFACES, SHRINK WRAP MAY BE USED IN LIEU OF WAX TAPE. SEE SPECIFICATIONS.
8. WHERE PIPE IS REQUIRED ON ONE SIDE ONLY, PROVIDE MJxPE WALL PIPE.
9. FOR PIPING FLEXIBILITY, PROVIDE GAP LARGE ENOUGH TO FACILITATE PIPE ASSEMBLY AND DISASSEMBLY AT ASSOCIATED FLANGE PIPE JOINTS.

B FLANGED - MECHANICAL JOINT WALL PIPE WITH TIE RODS

NO SCALE

NOTES :

1. WALL PIPE TO BE FABRICATED OF 3/8" MINIMUM STEEL WITH COATINGS SAME AS CONNECTING PIPE, OR 304L SS, OR OTHER MATERIAL AS SPECIFIED OR INDICATED ON DRAWINGS. IF CONNECTING STEEL PIPE THICKNESS IS GREATER THAN 3/8", WALL PIPE THICKNESS SHALL BE INCREASED TO MATCH CONNECTING PIPE.
2. ANNULAR COLLAR SHALL BE SAME MATERIAL AS PIPE, 1/4" x 2" FOR PIPE 20" AND SMALLER, AND 3/8" X 3" FOR PIPE LARGER THAN 20".
3. WALL PIPE MAY BE FLUSH WITH FACE OF WALL, EXTENDED WITH CLOSURE PLATE FOR FUTURE EXTENSION, EXTENDED WITH NON-RESTRAINED GASKETED JOINT, OR RESTRAINED GASKETED JOINTS MAY BE USED ON BOTH SIDES OF THE WALL, AS INDICATED ON THE DRAWINGS.
6. FOR BURIED PIPING WITH NON-RESTRAINED JOINTS, CONTRACTOR TO PROVIDE AN ADDITIONAL FIELD JOINT AS CLOSE AS PRACTICAL TO FACE OF WALL, BUT NOT CLOSER THAN 5 FEET.
7. USE WAX TAPE TO PROTECT ALL BURIED FERROUS SURFACES, INCLUDING PAINTED SURFACES. FOR PROTECTION OF ADJACENT PIPE BARREL SURFACES, SHRINK WRAP MAY BE USED IN LIEU OF WAX TAPE. SEE SPECIFICATIONS.

90% SUBMITTAL - NOT FOR CONSTRUCTION

NO.	BY	CHK	APP	DATE	REVISIONS AND RECORD OF USE
B	KEZ	RWF	EVB	3/31/2020	90% SUBMITTAL
A	KEZ	RT	EVB	7/30/2019	60% SUBMITTAL

REGISTERED PROFESSIONAL ENGINEER — ERIK V. REYNOLDS — No. C 76836 — STATE OF CALIFORNIA

BLACK & VEATCH JOINT VENTURE — BLACK & VEATCH — FILANC

CITY OF MORRO BAY
MORRO BAY WATER RECLAMATION FACILITY (WRF)

GENERAL
CIVIL-MECHANICAL
DETAILS

DESIGNED: KEZ
DETAILED: MAK
CHECKED:
APPROVED:
DATE:

0 1/2 1
IF THIS BAR DOES NOT MEASURE 1" THEN DRAWING IS NOT TO FULL SCALE

PROJECT NO. 400530

00-M-503
SHEET
OF XXX

PLOTTED: 3/24/2020 3:12:10 PM
D400530

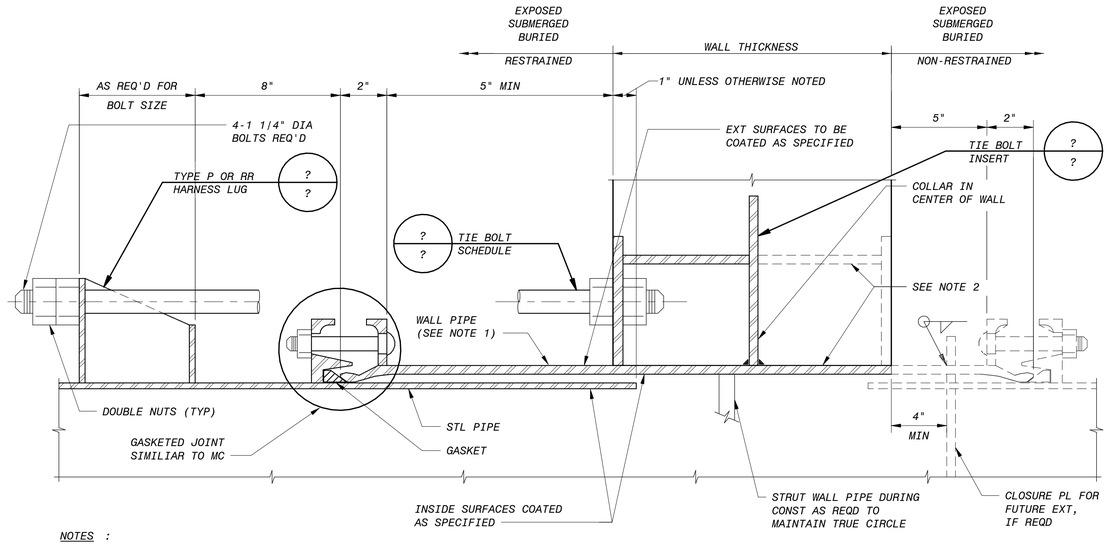

NOTES :

1. WALL PIPE TO BE FABRICATED OF 3/8" MINIMUM STEEL WITH COATINGS SAME AS CONNECTING PIPE, OR 304L SS, OR OTHER MATERIAL AS SPECIFIED OR INDICATED ON DRAWINGS. IF CONNECTING STEEL PIPE THICKNESSS IS GREATER THAN 3/8", WALL PIPE THICKNESS SHALL BE INCREASED TO MATCH CONNECTING PIPE.

2. WALL PIPE MAY BE FLUSH WITH FACE OF WALL, EXTENDED WITH CLOSURE PLATE FOR FUTURE EXTENSION, EXTENDED WITH NON-RESTRAINED GASKETED JOINT, OR RESTRAINED GASKETED JOINTS MAY BE USED ON BOTH SIDES OF THE WALL, AS INDICATED ON THE DRAWINGS.

3. FOR BURIED PIPING WITH NON-RESTRAINED JOINTS, CONTRACTOR TO PROVIDE AN ADDITIONAL FIELD JOINT AS CLOSE AS PRACTICAL TO FACE OF WALL, BUT NOT CLOSER THAN 5 FEET.

4. USE WAX TAPE TO PROTECT ALL BURIED FERROUS SURFACES, INCLUDING PAINTED SURFACES. FOR PROTECTION OF ADJACENT PIPE BARREL SURFACES, SHRINK WRAP MAY BE USED IN LIEU OF WAX TAPE. SEE SPECIFICATIONS.

A HARNESSED WALL PIPE FOR STEEL PIPE

NO SCALE

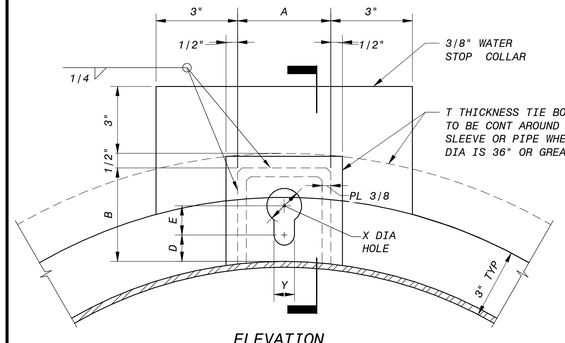

ELEVATION

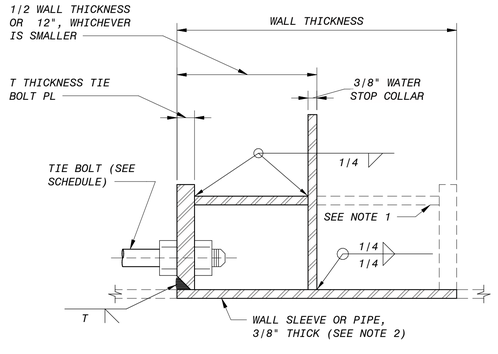

SECTION

TIE BOLT SCHEDULE (INCHES)							
TIE BOLT DIAMETER	A	B	D	E	X	Y	T
5/8	4	5	*	1	1 3/8	3/4	3/8
3/4	4	5	*	1 1/4	1 1/2	7/8	3/8
7/8	4 1/2	5 1/2	*	1 1/2	1 3/4	1	1/2
1	5	6	*	1 3/4	2	1 1/8	1/2
1 1/8	5	6 1/2	*	1 3/4	2 1/4	1 1/4	1/2
1 1/4	5	7	*	2	2 3/8	1 3/8	5/8
1 3/8	5 1/2	7	*	2 1/4	2 3/4	1 1/2	5/8
1 1/2	5 1/2	7 1/2	*	2 1/2	3	1 5/8	3/4
1 5/8	6	7 1/2	*	2 1/2	3 1/4	1 3/4	3/4
1 3/4	6	8	*	2 3/4	3 3/8	1 7/8	7/8
1 7/8	6 1/2	8 1/2	*	3	3 3/4	2	7/8
2	6 1/2	9	*	3 1/4	4	2 1/8	1
2 1/4	6 1/2	9 1/2	*	3 1/2	4 1/4	2 3/8	1

* D = COUPLING FOLLOWER RING HEIGHT PLUS ONE-HALF BOLT DIA PLUS 1/8".

NOTES :

1. TIE BOLT INSERT MAY BE ON EITHER OR BOTH WALL FACES AS INDICATED ON DRAWINGS.

2. IF CONNECTING STEEL PIPE THICKNESS IS GREATER THAN 3/8" AND WALL SLEEVE OR PIPE IS EXTENDED BEYOND THE FACE OF THE WALL, WALL SLEEVE OR PIPE THICKNESS SHALL BE INCREASED TO MATCH CONNECTING PIPE.

C TIE BOLT INSERT

NO SCALE

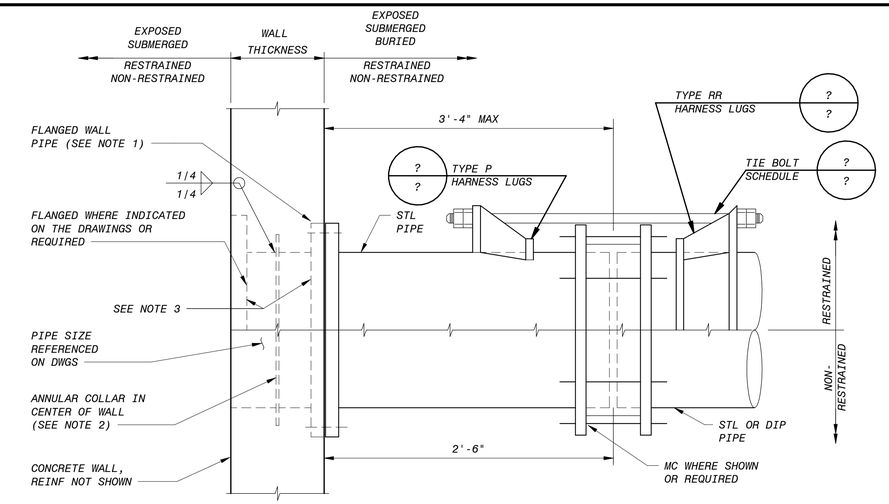

NOTES :

1. WALL PIPE MATERIAL SHALL BE DUCTILE IRON, STEEL, OR AS INDICATED ON THE DRAWINGS. STEEL WALL PIPE SHALL BE SCHEDULE 40 FOR PIPE 20" AND SMALLER, 3/8" FOR PIPE LARGER THAN 20", AND HOT DIP GALVANIZED AFTER FABRICATION.
2. ANNULAR COLLAR SHALL BE SAME MATERIAL AS PIPE, 1/4" X 2" FOR PIPE 20" AND SMALLER, AND 3/8" X 3" FOR PIPE LARGER THAN 20"
3. ALL FLANGE BOLT HOLES IN WALL PIPE SHALL BE DRILLED AND TAPPED.
4. WALL PIPE SHALL BE ORIENTATED SO THAT THE BOLT HOLES STRADDLE THE TOP CENTERLINE.
5. USE WAX TAPE TO PROTECT ALL BURIED FERROUS SURFACES, INCLUDING PAINTED SURFACES. FOR PROTECTION OF MECHANICAL COUPLINGS AND ADJACENT PIPE BARREL SURFACES, SHRINK WRAP MAY BE USED IN LIEU OF WAX TAPE. SEE SPECIFICATIONS.

B MECHANICAL COUPLING WALL PIPE FOR STEEL PIPE

NO SCALE

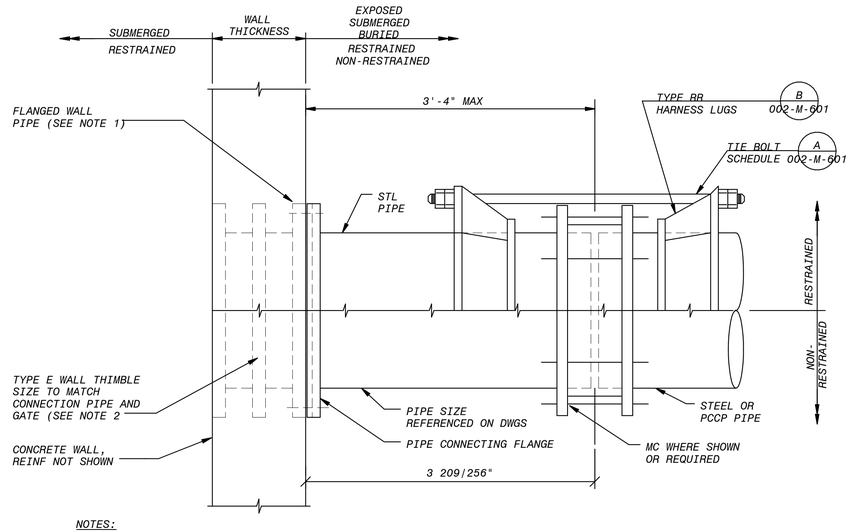

NOTES:

1. USE WAX TAPE TO PROTECT ALL BURIED FERROUS SURFACES, INCLUDING PAINTED SURFACES. FOR PROTECTION OF MECHANICAL COUPLINGS ADJACENT PIPE BARREL SURFACES, SHRINK WRAP MAY BE USED IN LIEU OF WAX TAPE. SEE SPECIFICATIONS.
2. TYPE E WALL THIMBLE WITH CIRCULAR PIPE CONNECTING FLANGE AND CIRCULAR OR SQUARE GATE MOUNTING FLANGE TO MATCH GATE SHOWN ON DRAWINGS OR SPECIFIED. DRILL AND TAP PIPE CONNECTING FLANGE TO MATCH PIPE AND GATE MOUNTING FLANGE TO MATCH GATE FRAME.
3. SIMILAR FOR DUCTILE IRON PIPE. USE A COUPLING GLAND STYLE JOINT RESTRAINT IN LIEU OF HARNESS LUG.

D 003-234 - STEEL OR DIP CONNECTION AT SLIDE GATE

NO SCALE

90% SUBMITTAL - NOT FOR CONSTRUCTION

NO.	BY	CHK	APP	DATE	REVISIONS AND RECORD OF USE
B	KEZ	RWF	EVB	3/31/2020	90% SUBMITTAL
A	KEZ	RT	EVB	7/30/2019	60% SUBMITTAL

REGISTERED PROFESSIONAL ENGINEER — ERIK V. REYNOLDS — No. C 76836 — STATE OF CALIFORNIA — CIVIL

BLACK & VEATCH

JOINT VENTURE

BLACK & VEATCH

FILANC

CITY OF MORRO BAY
MORRO BAY WATER
RECLAMATION FACILITY (WRF)

GENERAL
CIVIL - MECHANICAL
DETAILS

DESIGNED: KEZ
DETAILED: MAK
CHECKED:
APPROVED:
DATE:

0 1/2 1
IF THIS BAR DOES NOT MEASURE 1" THEN DRAWING IS NOT TO FULL SCALE

PROJECT NO. 400530

00-M-504
SHEET OF XXX

PLOTTED: 3/24/2020 3:12:14 PM
D400530

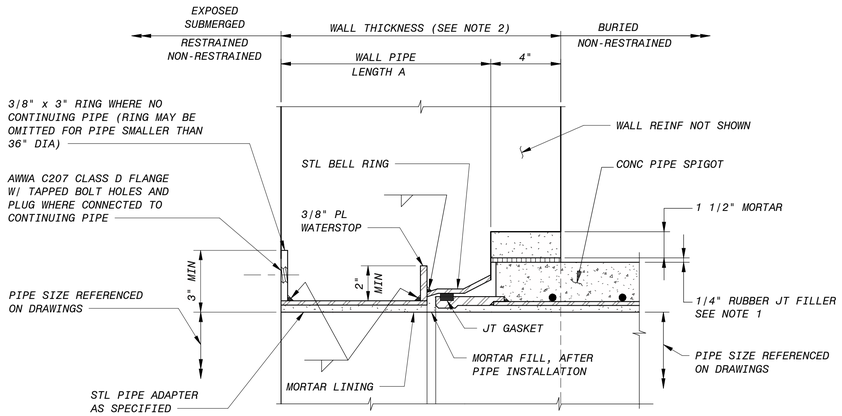

NOTES :

1. JOINT FILLER TO BE NATURAL OR SYNTHETIC RUBBER JT FILLER 1/4" THICK x 4" WIDE, CONTINUOUSLY AROUND PIPE, WITH A HARDNESS OF 40 WHEN MEASURED BY ASTM D 2240, TYPE A DUROMETER.
2. WHERE CONCRETE WALL THICKNESS IS LESS THAN MINIMUM THICKNESS INDICATED, THE WALL SHALL BE THICKENED BY CONSTRUCTING A REINFORCED CONCRETE COLLAR AROUND THE PIPE AS INDICATED ON THE DRAWINGS. THE COLLAR SHALL BE CAST WITH THE WALL AND SHALL HAVE A MINIMUM SQUARE DIMENSION OF PIPE O.D. PLUS 2'.
3. CONCRETE PIPE SHALL BE RCP, PCCP, LHCP OR CBCP PIPE AS INDICATED ON DRAWINGS OR SPECIFIED.

MINIMUM WALL PIPE LENGTH	
PIPE DIA	A
16"-36"	8"
42"-54"	9"
60"-84"	10"
90"-144"	12"

A RUBBER AND STEEL JOINT CONCRETE WALL PIPE

NO SCALE

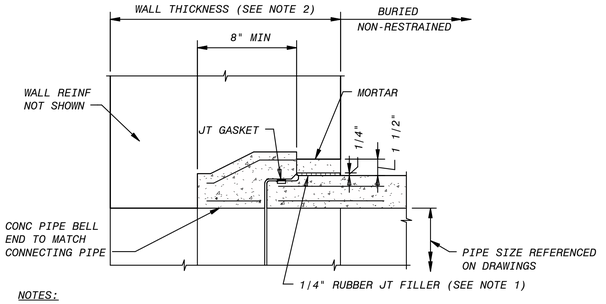

NOTES:

1. JOINT FILLER TO BE NATURAL OR SYNTHETIC RUBBER JOINT FILLER 1/4" THICK x 4" WIDE, CONTINUOUSLY AROUND PIPE, WITH A HARDNESS OF 40 WHEN MEASURED BY ASTM D 2240, TYPE A DUROMETER.
2. WHERE CONCRETE WALL THICKNESS IS LESS THAN MINIMUM THICKNESS INDICATED, THE WALL SHALL BE THICKENED BY CONSTRUCTING A REINFORCED CONCRETE COLLAR AROUND THE PIPE AS INDICATED ON THE DRAWINGS. THE COLLAR SHALL BE CAST WITH THE WALL AND SHALL HAVE A MINIMUM SQUARE DIMENSION OF PIPE O.D. + 2'.
3. CONCRETE PIPE SHALL BE RCP OR LHCP PIPE AS INDICATED ON DRAWING OR SPECIFIED.

B 003-241 - RUBBER AND CONCRETE JOINT CONCRETE WALL PIPE

NO SCALE

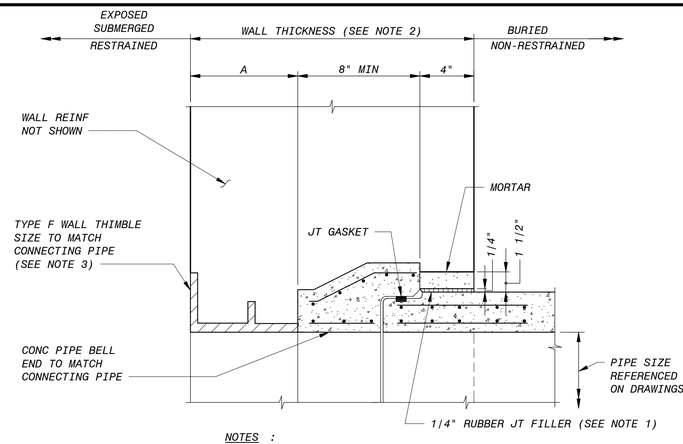

MINIMUM GATE WALL THIMBLE LENGTH	
PIPE DIA	A
24"-60"	8"
66"-96"	10"

NOTES :

1. JOINT FILLER TO BE NATURAL OR SYNTHETIC RUBBER JT FILLER 1/4" THICK x 4" WIDE, CONTINUOUSLY AROUND PIPE, WITH A HARDNESS OF 40 WHEN MEASURED BY ASTM D 2240, TYPE A DUROMETER.
2. WHERE CONCRETE WALL THICKNESS IS LESS THAN MINIMUM THICKNESS INDICATED, THE WALL SHALL BE THICKENED BY CONSTRUCTING A REINFORCED CONCRETE COLLAR AROUND THE PIPE AS INDICATED ON THE DRAWINGS. THE COLLAR SHALL BE CAST WITH THE WALL AND SHALL HAVE A MINIMUM SQUARE DIMENSION OF PIPE O.D. PLUS 2'.
3. CIRCULAR TYPE F WALL THIMBLE WITH CIRCULAR OR SQUARE GATE MOUNTING FLANGE TO MATCH GATE SHOWN ON DRAWINGS OR SPECIFIED. DRILL AND TAP GATE MOUNTING FLANGE TO MATCH GATE FRAME.
4. CONCRETE PIPE SHALL BE RCP OR LHCP PIPE AS INDICATED ON DRAWINGS OR SPECIFIED.

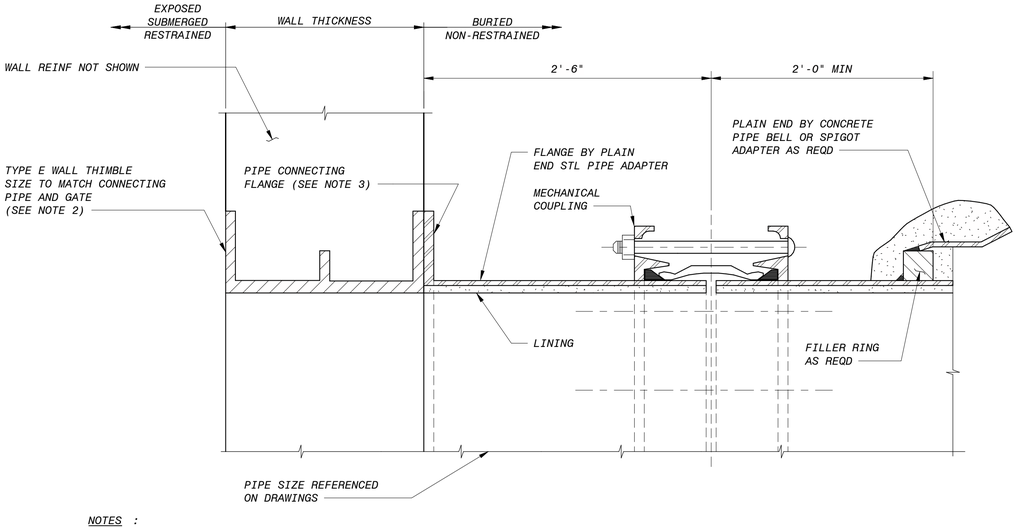

NOTES :

1. USE WAX TAPE TO PROTECT ALL BURIED FERROUS SURFACES, INCLUDING PAINTED SURFACES. FOR PROTECTION OF MECHANICAL COUPLINGS AND ADJACENT PIPE BARREL SURFACES, SHRINK WRAP MAY BE USED IN LIEU OF WAX TAPE. SEE SPECIFICATIONS.
2. TYPE E WALL THIMBLE WITH CIRCULAR PIPE CONNECTING FLANGE AND CIRCULAR OR SQUARE GATE MOUNTING FLANGE TO MATCH GATE SHOWN ON DRAWINGS OR AS SPECIFIED. DRILL AND TAP PIPE CONNECTING FLANGE TO MATCH PIPE AND GATE MOUNTING FLANGE TO MATCH GATE FRAME.
3. CONCRETE PIPE SHALL BE RCP, PCCP, LHCP, OR CBCP PIPE AS INDICATED ON DRAWINGS OR AS SPECIFIED.

D RUBBER AND STEEL JOINT CONCRETE WALL PIPE AT CAST-IRON SLIDE GATE

NO SCALE

C RUBBER AND CONCRETE JOINT CONCRETE WALL PIPE AT SLUICE GATE

NO SCALE

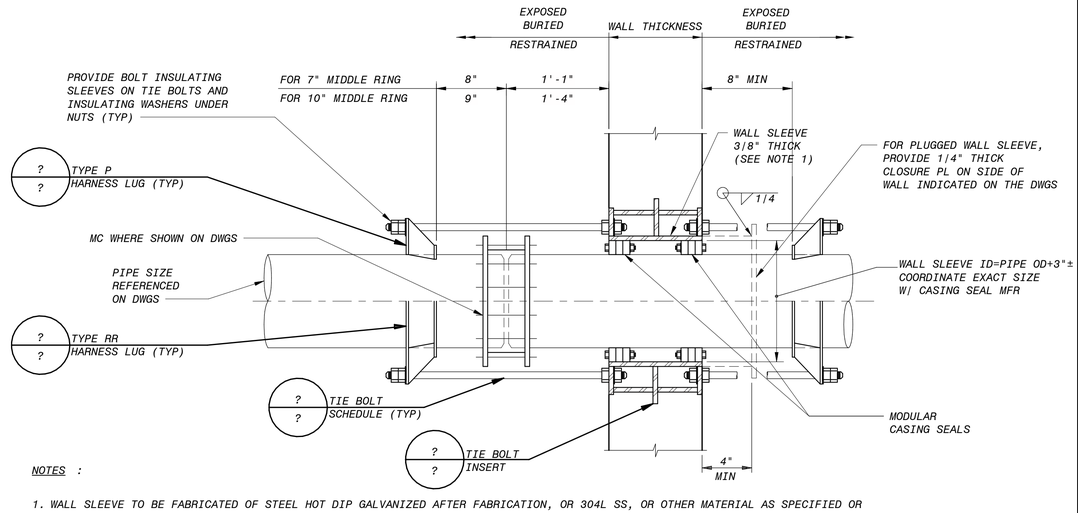

NOTES :

1. WALL SLEEVE TO BE FABRICATED OF STEEL HOT DIP GALVANIZED AFTER FABRICATION, OR 304L SS, OR OTHER MATERIAL AS SPECIFIED OR INDICATED ON DRAWINGS.
5. FOR BURIED PIPING, CONTRACTOR SHALL PROVIDE AN ADDITIONAL FIELD JOINT AS CLOSE AS PRACTICAL TO FACE OF WALL, BUT NO MORE THAN 5 FEET.
6. USE WAX TAPE TO PROTECT ALL BURIED FERROUS SURFACES INCLUDING PAINTED SURFACES. FOR PROTECTION OF MECHANICAL COUPLINGS AND ADJACENT PIPE BARREL SURFACES, SHRINK WRAP MAY BE USED IN LIEU OF WAX TAPE. SEE SPECIFICATIONS.

E HARNESSED WALL SLEEVE FOR STEEL PIPE

NO SCALE

90% SUBMITTAL - NOT FOR CONSTRUCTION

NO.	BY	CHK	APP	DATE	REVISIONS AND RECORD OF USE
B	KEZ	RWF	EVB	3/31/2020	90% SUBMITTAL
A	KEZ	RT	EVB	7/30/2019	60% SUBMITTAL

REGISTERED PROFESSIONAL ENGINEER ERIK V. REYNOLDS No. C 76836 STATE OF CALIFORNIA

BLACK & VEATCH

JOINT VENTURE

BLACK & VEATCH

FILANC

CITY OF MORRO BAY
MORRO BAY WATER
RECLAMATION FACILITY (WRF)

GENERAL
CIVIL - MECHANICAL
DETAILS

DESIGNED: KEZ
DETAILED: MAK
CHECKED:
APPROVED:
DATE:

0 1/2 1
IF THIS BAR DOES NOT MEASURE 1" THEN DRAWING IS NOT TO FULL SCALE

PROJECT NO.
400530

00-M-505
SHEET
OF XXX

PLOTTED: 3/24/2020 3:12:16 PM
D400530

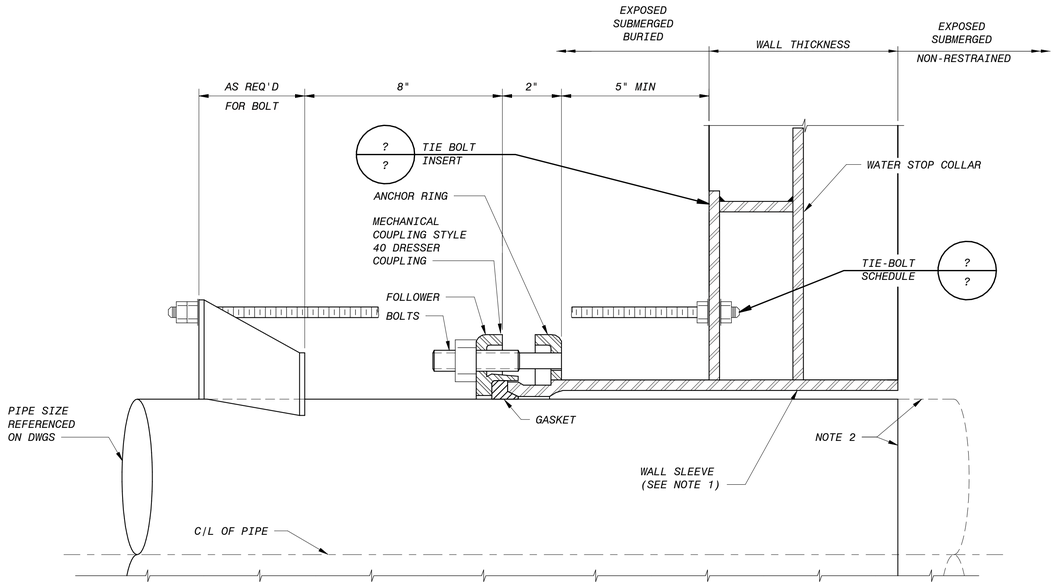

NOTES :

1. WALL SLEEVE TO BE FABRICATED OF 3/8" MINIMUM STEEL HOT DIP GALVANIZED AFTER FABRICATION, 304 SS, OR OTHER MATERIAL AS SPECIFIED OR INDICATED ON DRAWINGS.
2. PIPING MAY BE FLUSH WITH THE FACE OF THE WALL, OR EXTENDING FROM THE WALL WITH END AS REQUIRED OR INDICATED ON THE DRAWINGS.
3. USE WAX TAPE TO PROTECT ALL BURIED FERROUS SURFACES INCLUDING PAINTED SURFACES. FOR PROTECTION OF ADJACENT PIPE BARREL SURFACES, SHRINK WRAP MAY BE USED IN LIEU OF WAX TAPE. SEE SPECIFICATIONS.

A HARNESSED STEEL PIPE WALL SLEEVE
NO SCALE

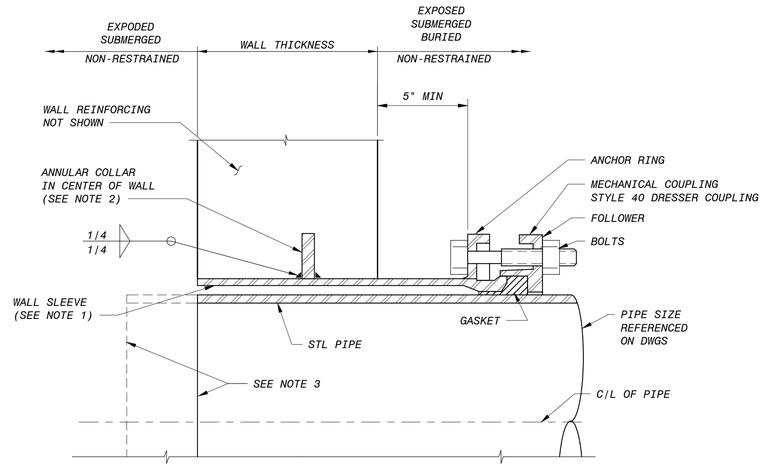

NOTES :

1. WALL SLEEVE TO BE FABRICATED OF 3/8" MIN STEEL HOT DIP GALVANIZED AFTER FABRICATION, 304 SS, OR OTHER MATERIAL AS SPECIFIED OR INDICATED ON DRAWINGS.
2. ANNULAR COLLAR SHALL BE SAME MATERIAL AS PIPE 1/4" X 2" FOR PIPE 20" AND SMALLER, AND 3/8" X 3" FOR PIPE LARGER THAN 20".
3. PIPING MAY BE FLUSH WITH THE FACE OF THE WALL OR EXTENDING FROM THE WALL WITH END AS REQUIRED OR INDICATED ON THE DRAWINGS.
6. FOR BURIED PIPING, CONTRACTOR SHALL PROVIDE AN ADDITIONAL FIELD JOINT AS CLOSE AS PRACTICAL TO FACE OF WALL, BUT NO MORE THAN 5 FEET.
7. USE WAX TAPE TO PROTECT ALL BURIED FERROUS SURFACES INCLUDING PAINTED SURFACES. FOR PROTECTION OF ADJACENT PIPE BARREL SURFACES, SHRINK WRAP MAY BE USED IN LIEU OF WAX TAPE. SEE SPECIFICATIONS.

B NON-HARNESSED STEEL PIPE WALL SLEEVE
NO SCALE

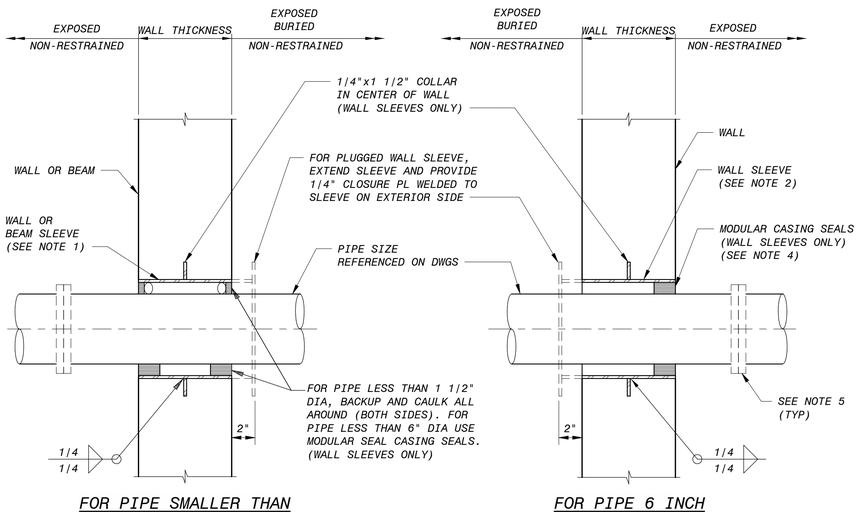

NOTES :

1. SCHEDULE 40 GALV STEEL PIPE SLEEVE. SIZE TO PROVIDE 3/4" ANNULAR SPACE AROUND PIPE FOR ALL BEAM SLEEVES AND FOR WALL SLEEVES FOR PIPES SMALLER THAN 1 1/2" DIAMETER. FOR PIPE SMALLER THAN 6" DIAMETER, COORDINATE WALL SLEEVE DIAMETER WITH MODULAR CASING SEAL MANUFACTURER.
2. WALL SLEEVE, SCHEDULE 40 STEEL PIPE FOR 12" AND SMALLER SLEEVES, 1/4" STEEL PIPE FOR SLEEVES LARGER THAN 12", AND HOT DIP GALVANIZED AFTER FABRICATION, 304 SS, OR OTHER MATERIAL AS SPECIFIED OR INDICATED ON DRAWINGS. COORDINATE WALL SLEEVE DIAMETER WITH MODULAR CASING SEAL MANUFACTURER.
3. FIRESAFING TO BE PROVIDED AT ALL RATED WALLS INDICATED ON THE DRAWINGS AND INSTALLED PER ACCEPTED UL RATED SYSTEM.
4. WHERE SOIL MAY BE PRESENT, USE TWO SETS OF CASING SEALS. ONE AT EACH FACE OF WALL.
5. TO MINIMIZE SLEEVE SIZE, PROVIDE A SCREW-ON FLANGE, GROOVED COUPLING, OR MECHANICAL COUPLING WITH ANCHOR STUDS ON ONE SIDE OF OPENING.
5. FOR BURIED PIPING, CONTRACTOR SHALL PROVIDE AN ADDITIONAL FIELD JOINT AS CLOSE AS PRACTICAL TO FACE OF WALL, BUT NO MORE THAN 5 FEET.
6. USE WAX TAPE TO PROTECT ALL BURIED FERROUS SURFACES INCLUDING PAINTED SURFACES. FOR PROTECTION OF ADJACENT PIPE BARREL SURFACES, SHRINK WRAP MAY BE USED IN LIEU OF WAX TAPE. SEE SPECIFICATIONS.

C CONCRETE WALL OR BEAM SLEEVE
NO SCALE

90% SUBMITTAL - NOT FOR CONSTRUCTION

NO.	BY	CHK	APP	DATE	REVISIONS AND RECORD OF USE
				3/31/2020	90% SUBMITTAL
B	KEZ	RWF	EVB	7/30/2019	60% SUBMITTAL
A	KEZ	RT	EVB		

REGISTERED PROFESSIONAL ENGINEER — ERIK V. REYNOLDS — No. C 76836 — STATE OF CALIFORNIA

BLACK & VEATCH
JOINT VENTURE
BLACK & VEATCH
FILANC

CITY OF MORRO BAY
MORRO BAY WATER RECLAMATION FACILITY (WRF)

GENERAL
CIVIL - MECHANICAL
DETAILS

DESIGNED: KEZ
DETAILED: MAK
CHECKED:
APPROVED:
DATE:

0 1/2 1
IF THIS BAR DOES NOT MEASURE 1" THEN DRAWING IS NOT TO FULL SCALE

PROJECT NO. 400530

00-M-506
SHEET OF XXX

PLOTTED: 3/24/2020 3:12:17 PM
D400530

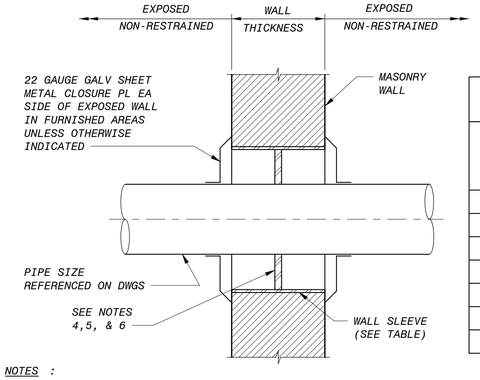

WALL SLEEVE TABLE	
PIPE SIZE	SLEEVE SIZE UNLESS OTHERWISE INDICATED (SEE NOTES 3 & 4)
1"& SMALLER	3"
1 1/4"&1 1/2"	3 1/2"
2" & 2 1/2"	4"
3"	6"
4"	6"
6"	8"
8"& LARGER	PIPE OD+2"±

NOTES :

1. SCHEDULE 40 GALV STEEL PIPE FOR PIPING SMALLER THAN 3", SCHEDULE 20 GALV STEEL PIPE FOR PIPING SMALLER THAN 6", AND GALV 1/4" MINIMUM WALL THICKNESS FOR PIPING LARGER THAN 6".
2. FOR PIPING LARGER THAN 3" PROVIDE PIPE SUPPORT WITHIN 3' OF WALL SLEEVE TO PREVENT THE TRANSFER OF PIPE LOADS TO MASONRY WALL WHEN MODULAR CASING SEALS ARE USED.
3. WHERE REQUIRED, USE SLEEVE LARGE ENOUGH FOR FLANGE OR OTHER JOINT RESTRAINT TO PASS THROUGH.
4. FOR PIPE SIZES 1 1/2" IN DIAMETER AND SMALLER, CAULK ANNULAR SPACE AROUND PIPE. FOR PIPE LARGER THAN 1 1/2" IN DIAMETER, USE MODULAR CASING SEALS AND COORDINATE SLEEVE SIZE WITH CASING SEAL MANUFACTURER.
5. PROVIDE MODULAR CASING SEALS ON ALL SLEEVES AT CHLORINE AND AMMONIA FEED AND STORAGE ROOMS AND WHERE INDICATED ON THE DRAWINGS. COORDINATE SLEEVE SIZE WITH CASING SEAL MANUFACTURER.
6. FIRESAFING TO BE PROVIDED AT ALL RATED WALLS INDICATED ON THE DRAWINGS AND INSTALLED PER ACCEPTED UL RATED SYSTEMS.

A MASONRY WALL SLEEVE
NO SCALE

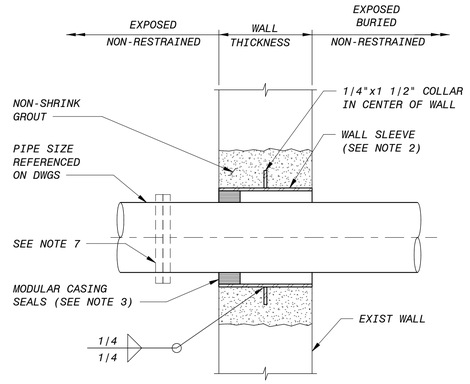

NOTES :

1. CUT OPENING FOR WALL SLEEVE, ROUGHEN EXIST CONCRETE, APPLY BONDING AGENT AND FILL WITH NON-SHRINK GROUT PER THE SPECIFICATIONS. DIAMETER OF OPENING TO BE COLLAR DIAMETER + 4".
2. WALL SLEEVE, SCHEDULE 40 STEEL PIPE FOR 12" AND SMALLER SLEEVES, 1/4" STEEL PIPE FOR SLEEVES LARGER THAN 12", AND HOT DIP GALVANIZED AFTER FABRICATION, 304 SS, OR OTHER MATERIAL AS SPECIFIED OR INDICATED ON DRAWINGS. COORDINATE SLEEVE SIZE WITH MODULAR CASING SEAL MANUFACTURER.
3. WHERE SOIL MAY BE PRESENT, USE TWO SETS OF CASING SEALS. ONE AT EACH FACE OF WALL.
4. FIRESAFING TO BE PROVIDED AT ALL RATED WALLS INDICATED ON THE DRAWINGS AND INSTALLED PER ACCEPTED UL RATED SYSTEM.
5. FOR BURIED PIPING, CONTRACTOR SHALL PROVIDE AN ADDITIONAL FIELD JOINT AS CLOSE AS PRACTICAL TO FACE OF WALL, BUT NO MORE THAN 5 FEET.
6. USE WAX TAPE TO PROTECT ALL BURIED FERROUS SURFACES INCLUDING PAINTED SURFACES. FOR PROTECTION OF ADJACENT PIPE BARREL SURFACES, SHRINK WRAP MAY BE USED IN LIEU OF WAX TAPE. SEE SPECIFICATIONS.
7. TO MINIMIZE SLEEVE SIZE, PROVIDE A SCREW-ON FLANGE, GROOVED COUPLING, OR MECHANICAL COUPLING WITH ANCHOR STUDS ON ONE SIDE OF OPENING.

B WALL SLEEVE AT EXISTING CONCRETE WALL
NO SCALE

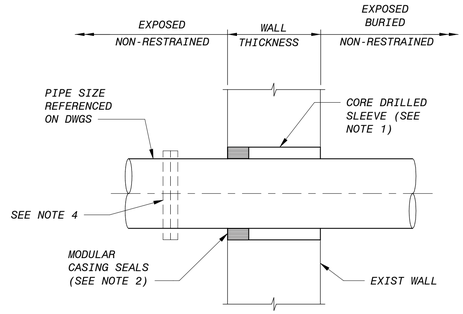

NOTES :

1. CORE DRILL SMOOTH WALL OPENING, COORDINATE CORE DIAMETER AS REQUIRED WITH CASING SEAL MANUFACTURER. MAXIMUM CORE DIAMETER SHALL BE 12".
2. WHEN SOIL MAY BE PRESENT, USE TWO SETS OF CASING SEALS. ONE AT EACH FACE OF WALL.
3. FIRESAFING TO BE PROVIDED AT ALL RATED WALLS INDICATED ON THE DRAWINGS AND INSTALLED PER ACCEPTED UL RATED SYSTEM.
4. TO MINIMIZE SLEEVE SIZE, PROVIDE A SCREW-ON FLANGE, GROOVED COUPLING, OR MECHANICAL COUPLING WITH ANCHOR STUDS ON ONE SIDE OF OPENING.
5. FOR BURIED PIPING, CONTRACTOR SHALL PROVIDE AN ADDITIONAL FIELD JOINT AS CLOSE AS PRACTICAL TO FACE OF WALL, BUT NO MORE THAN 5 FEET.
6. USE WAX TAPE TO PROTECT ALL BURIED FERROUS SURFACES INCLUDING PAINTED SURFACES. FOR PROTECTION OF ADJACENT PIPE BARREL SURFACES, SHRINK WRAP MAY BE USED IN LIEU OF WAX TAPE. SEE SPECIFICATIONS.

C CORE DRILLED WALL SLEEVE
NO SCALE

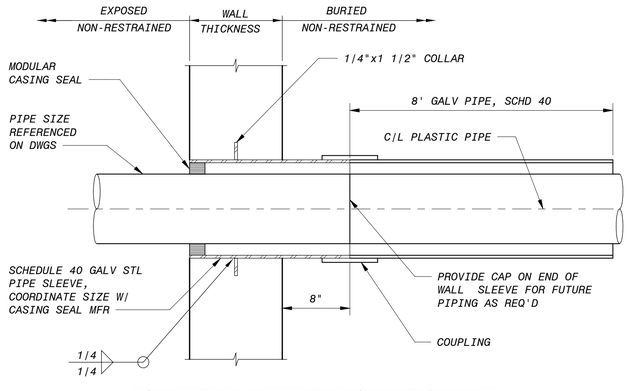

FOR PIPE DIAMETER 6 INCH AND SMALLER

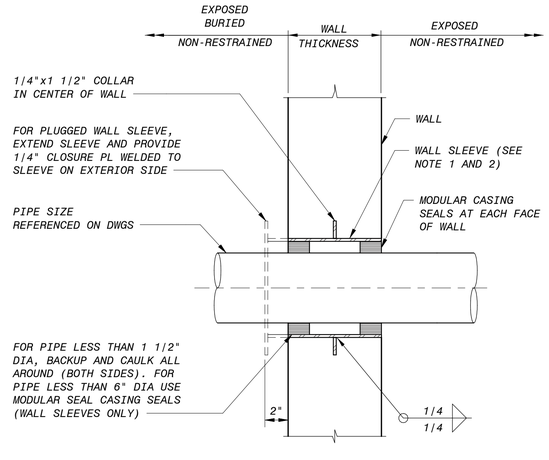

FOR PIPE DIAMETER LARGER THAN 6 INCH

NOTES :

1. WALL SLEEVE, SCHEDULE 40 STEEL PIPE FOR 12" AND SMALLER SLEEVES, 1/4" STEEL PIPE FOR SLEEVES LARGER THAN 12", AND HOT DIP GALVANIZED AFTER FABRICATION, 304 SS, OR OTHER MATERIAL AS SPECIFIED OR INDICATED ON DRAWINGS. COORDINATE WALL SLEEVE DIAMETER WITH MODULAR CASING SEAL MANUFACTURER.
2. FOR PIPE LARGER THAN 6", DIP MJ WALL SLEEVE AND PLASTIC PIPE WITH EQUIVALENT DIP OUTSIDE DIAMETER MAY NE USED AS AN ALTERNATE TO STEEL WALL SLEEVE.
3. FOR BURIED PVC PIPING, CONTRACTOR SHALL PROVIDE AN ADDITIONAL FIELD JOINT AS CLOSE AS PRACTICAL TO FACE OF WALL, BUT NOT CLOSER THAN 5 FEET.

D EXTERIOR WALL SLEEVE FOR PLASTIC PIPE
NO SCALE

90% SUBMITTAL - NOT FOR CONSTRUCTION

NO.	BY	CHK	APP	DATE	REVISIONS AND RECORD OF USE
B	KEZ	RWF	EVB	3/31/2020	90% SUBMITTAL
A	KEZ	RT	EVB	7/30/2019	60% SUBMITTAL

REGISTERED PROFESSIONAL ENGINEER ERIK V. REYNOLDS No. C 76836 STATE OF CALIFORNIA CIVIL

BLACK & VEATCH
JOINT VENTURE
BLACK & VEATCH
FILANC

CITY OF MORRO BAY
MORRO BAY WATER
RECLAMATION FACILITY (WRF)

GENERAL
CIVIL-MECHANICAL
DETAILS

DESIGNED: KEZ
DETAILED: MAK
CHECKED:
APPROVED:
DATE:

0 1/2 1
IF THIS BAR DOES NOT MEASURE 1" THEN DRAWING IS NOT TO FULL SCALE

PROJECT NO.
400530

00-M-507
SHEET
OF XXX

PLOTTED: 3/24/2020 3:12:18 PM
D400530

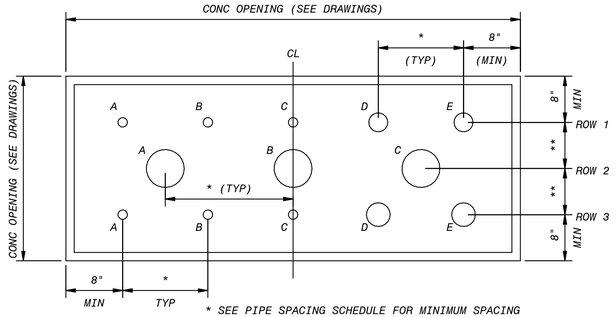

* SEE PIPE SPACING SCHEDULE FOR MINIMUM SPACING
** SPACING AS REQUIRED AND ADJUSTED FOR PIPING SIZE

ELEVATION

PANEL SLEEVE SCHEDULE	
SOLUTION OR GAS LINE SIZE (INCHES)	SCHEDULE 40 NOMINAL SLEEVE SIZE (INCHES)
3/4	1 1/2
1	2
1 1/2	2 1/2
2	3
2 1/2,3	4
4	5

MINIMUM PIPE SPACING SCHEDULE MINIMUM CENTERLINE TO CENTERLINE SPACING IN INCHES							
	PIPE SIZE (INCHES)						
PIPE SIZE (INCHES)	3/4	1	1 1/2	2	2 1/2	3	4
3/4	4 1/2	4 3/4	5 1/2	6	2 3/4	6 3/4	6 3/4
1	-	5	5 1/2	6	7	7	7
1 1/2	-	-	6 1/4	6 3/4	7 1/2	7 1/2	7 1/2
2	-	-	-	7 1/4	8 1/4	8 1/4	9
2 1/2	-	-	-	-	9	9	10
3	-	-	-	-	-	9	10
4	-	-	-	-	-	-	12

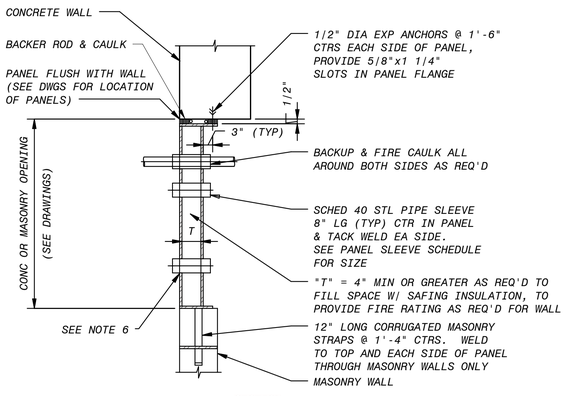

SECTION

PANEL PIPING SCHEDULE			
PIPE DESIGNATION		PIPE SIZE (INCHES)	PIPE SERVICE
ROW	LETTER		
1	A	-	-
1	B	-	-
1	C	-	-
1	D	-	-
1	E	-	-
2	A	-	-
2	B	-	-
2	C	-	-
3	A	-	-
3	B	-	-
3	C	-	-
3	D	-	-

NOTES :

1. SEE PANEL PIPING SCHEDULE FOR PIPING SIZE AND SERVICE.
2. WHERE LINES ARE INDICATED ON PIPING SCHEDULE TO BE FUTURE, INSTALL SLEEVES WITH THREADED ENDS OF THE SIZE AS INDICATED IN PANEL SLEEVE SCHEDULE. FILL SLEEVES WITH SAFING INSULATION AS REQUIRED AND INSTALL THREADED CAPS.
3. PIPE SPACING SHALL BE UNIFORM WITHIN THE OPENING, WITH MINIMUM SPACING AND ALLOWANCES AS INDICATED.
4. CONTRACTOR SHALL COORDINATE THE SPACING AND ALLOWANCES OF ALL PIPING AND SLEEVES PRIOR TO FABRICATION OF PANEL.
5. FIRESAFEING SHALL BE PROVIDED AT ALL RATED LOCATIONS INDICATED ON THE DRAWINGS AND INSTALLED PER ACCEPTED UL RATED SYSTEMS.
6. ALL PANEL MATERIAL, EXCEPT SLEEVES, SHALL BE 1/4" STEEL PL WELDED CONSTRUCTION. IN EXTERIOR LOCATIONS PIPE SLEEVES SHALL BE SEAL WELDED ALL AROUND.

A TYPICAL WALL SLEEVE PANEL
NO SCALE

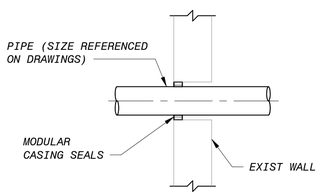

NOTE:

1. CORE DRILL SMOOTH WALL OPENING, DIAMETER AS REQUIRED FOR MODULAR CASING SEALS.

C CORE DRILLED WALL OPENING
NO SCALE

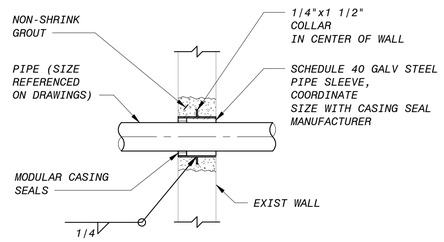

NOTE:

1. CUT OPENING FOR WALL SLEEVE,ROUGHEN EXIST CONCRETE, APPLY SIKA "SIKADUR HIMOD" BONDING AGENT AND FILL WITH NON-SHRINK GROUT PER THE SPECIFICATIONS. DIAMETER OF OPENING TO BE WATERSTOP DIAMETER + 4"

D SLEEVE AT EXISTING CONCRETE WALL
NO SCALE

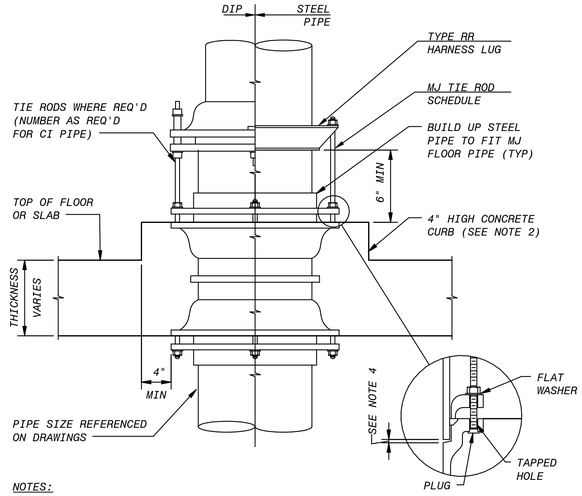

NOTES:

1. WHERE PIPE IS REQUIRED ON ONE SIDE OF THE FLOOR OR SLAB, PROVIDE A MJxPE FITTING
2. CURB MAY BE ROUND OR HEXAGONAL AT CONTRACTOR'S OPTION AND POURED SEPARATELY.
3. BOLT HOLES OF FLOOR PIPE SHALL BE ALIGNED WITH CONNECTING PIPE.
4. FOR PIPING FLEXIBILITY, PROVIDE GAP LARGE ENOUGH TO FACILITATE PIPE ASSEMBLY AND DISASSEMBLY AT ASSOCIATED FLANGE PIPE JOINTS.

B MECHANICAL JOINT FLOOR PIPE
NO SCALE

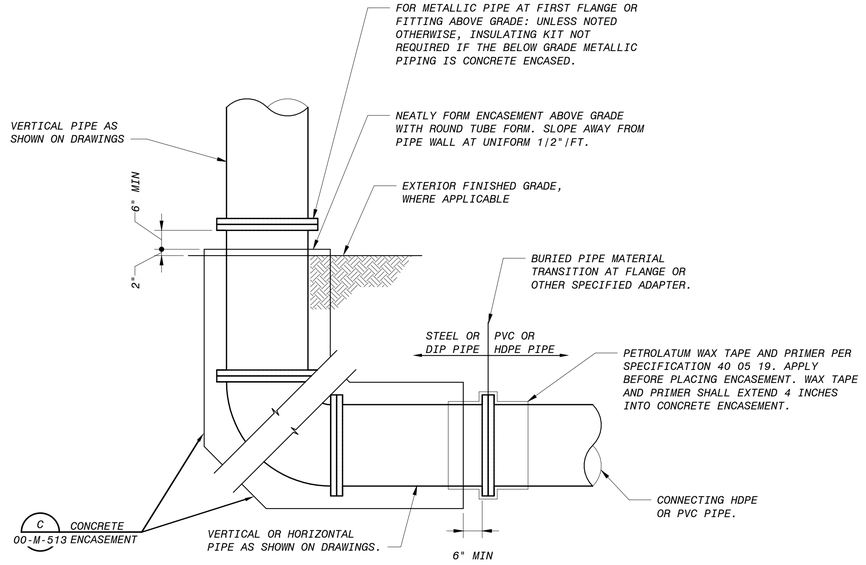

NOTES:

1. PIPING MATERIAL TRANSITIONS SHALL NOT BE LOCATED UNDER SLABS OR IN CONCRETE ENCASEMENT. PRESSURIZED PROCESS PIPING SHALL BE CONCRETE ENCASED UNDER SLABS. FOR PIPING CONNECTING TO STRUCTURES, LOCATE MATERIAL TRANSITIONS OUTSIDE OF EDGE OF STRUCTURES AND CONCRETE ENCASEMENT. ANY HARDWARE AND METALLIC PIPING SHALL BE PROTECTED FROM CORROSIVE SOIL CONTACT WITH PETROLATUM WAX TAPE AND PRIMER OR AS OTHERWISE INDICATED.

E BURIED PIPE MATERIAL TRANSITION FOR CORROSIVE SOILS
NO SCALE

90% SUBMITTAL - NOT FOR CONSTRUCTION

NO.	BY	CHK	APP	DATE	REVISIONS AND RECORD OF USE
B	KEZ	RWF	EVB	90% SUBMITTAL	
A	KEZ	RT	EVB	60% SUBMITTAL	

REGISTERED PROFESSIONAL ENGINEER — ERIK V. REVEACHE — No. C 76836 — STATE OF CALIFORNIA

BLACK & VEATCH
JOINT VENTURE
BLACK & VEATCH
FILANC

CITY OF MORRO BAY
MORRO BAY WATER
RECLAMATION FACILITY (WRF)

GENERAL
CIVIL-MECHANICAL
DETAILS

DESIGNED: KEZ
DETAILED: MAK
CHECKED:
APPROVED:
DATE:

0 1/2 1
IF THIS BAR DOES NOT MEASURE 1" THEN DRAWING IS NOT TO FULL SCALE

PROJECT NO.
400530

00-M-508
SHEET
OF XXX

PLOTTED: 3/24/2020 3:12:20 PM
D400530

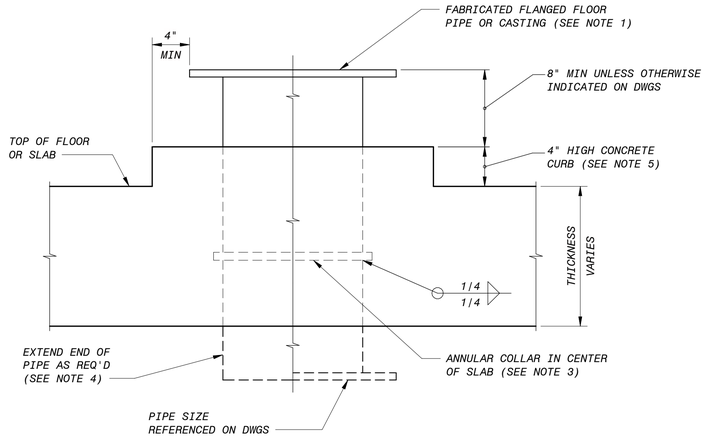

NOTES :

1. FLOOR PIPE MATERIAL SHALL BE DUCTILE IRON, STEEL, OR AS INDICATED ON DRAWINGS. STEEL PIPE SHALL BE SCHEDULE 40 FOR PIPE 20" AND SMALLER, 3/8" FOR PIPE LARGER THAN 20", AND COATINGS SAME AS CONNECTING PIPE.
2. IF CONNECTING STEEL PIPE THICKNESS IS GREATER THAN 3/8", STEEL FLOOR PIPE THICKNESS SHALL BE INCREASED TO MATCH CONNECTING PIPE.
3. ANNULAR COLLAR SHALL BE SAME MATERIAL AS PIPE AND SHALL BE 1/4"x2" FOR PIPE 20" AND SMALLER, AND 3/8"x3" FOR PIPE LARGER THAN 20".
4. FLOOR PIPE MAY BE FLUSH WITH FLOOR OR SLAB OR EXTENDED WITH END AS REQUIRED OR INDICATED ON DRAWINGS.
5. CURB MAY BE ROUND OR HEXAGONAL AT CONTRACTOR'S OPTION.
6. ORIENTATION OF FLOOR PIPE SHALL BE COORDINATED WITH CONNECTING PIPE.

A FLANGED FLOOR PIPE
NO SCALE

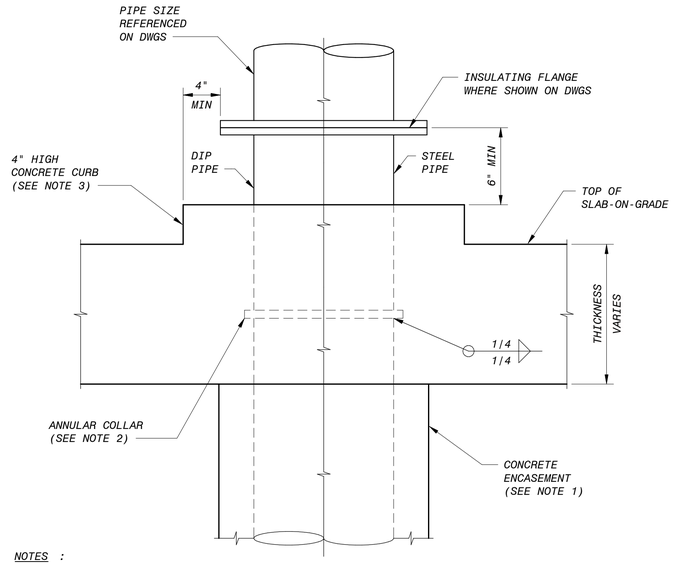

NOTES :

1. SLAB-ON-GRADE APPLICATIONS REQUIRE CONCRETE ENCASEMENT OF BELOW SLAB PIPING. RESTRAINED STYLE JOINTS ARE REQUIRED WHERE PIPE IS CONCRETE ENCASED.
2. ANNULAR COLLAR SHALL BE SAME MATERIAL AS PIPE. 1/4" X 2" FOR STEEL PIPE 20" AND SMALLER, AND 3/8" X 3" FOR PIPE LARGER THAN 20". ANNULAR COLLAR SHALL ONLY BE INCLUDED WHERE INDICATED ON THE DRAWINGS.
3. CURB MAY BE ROUND OR HEXAGONAL AT CONTRACTOR'S OPTION.
4. BOLT HOLES OF FLOOR PIPE SHALL BE ALIGNED WITH CONNECTING PIPE.

B SLAB-ON-GRADE FLOOR PIPE
NO SCALE

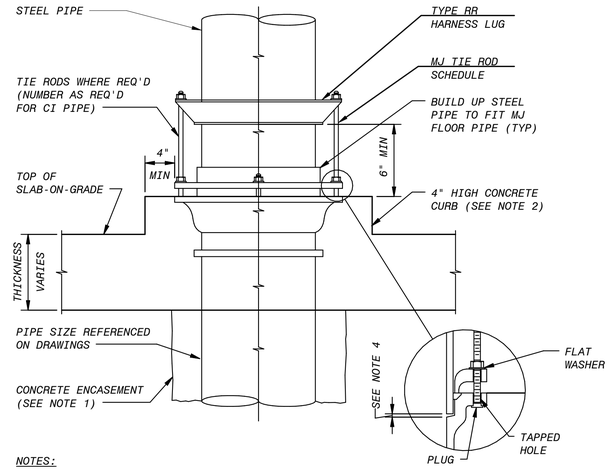

NOTES:

1. SLAB-ON-GRADE APPLICATIONS REQUIRE CONCRETE ENCASEMENT OF BELOW SLAB PIPING. RESTRAINED STYLE JOINTS ARE REQUIRED WHERE PIPE IS CONCRETE ENCASED.
2. CURB MAY BE ROUND OR HEXAGONAL AT CONTRACTOR'S OPTION AND POURED SEPARATELY.
3. BOLT HOLES OF FLOOR PIPE SHALL BE ALIGNED WITH CONNECTING PIPE.
4. FOR PIPING FLEXIBILITY, PROVIDE GAP LARGE ENOUGH TO FACILITATE PIPE ASSEMBLY AND DISASSEMBLY AT ASSOCIATED FLANGE PIPE JOINTS.

C MECHANICAL JOINT SLAB-ON-GRADE FLOOR PIPE
NO SCALE

TIE ROD SCHEDULE			
PIPE SIZE (IN)	MAXIMUM PRESSURE (PSI) (NOTE 1)	TIE RODS NO. OF RODS (NOTE 2)	TIE RODS DIA (IN)
6	250 OR LESS	2	3/4
8	150 OR LESS	2	3/4
10	200 OR LESS	2	3/4
	350	6	3/4
12	150 OR LESS	2	3/4
	300	4	3/4
14	100 OR LESS	2	3/4
	200	4	3/4
16	75 OR LESS	2	3/4
	150	4	3/4
18	75 OR LESS	2	3/4
	150	4	3/4
20	50 OR LESS	2	3/4
24	75	4	3/4
30	50 OR LESS	4	1
36	50 OR LESS	4	1
	100	8	1
42	50 OR LESS	4	1 1/4

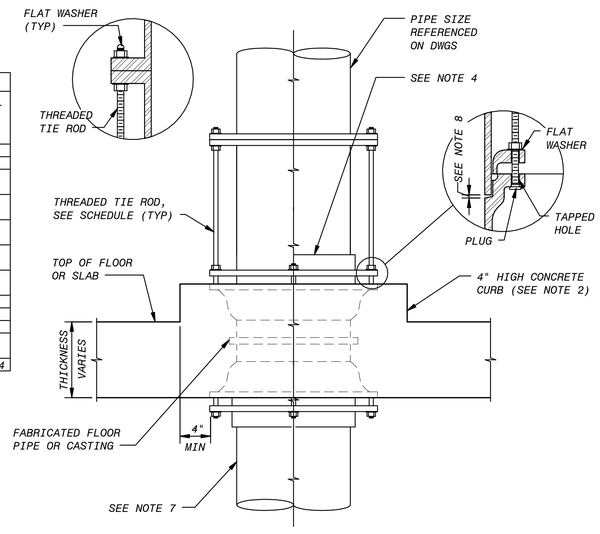

NOTES :

1. PRESSURE SHALL BE THE PRESSURE AT WHICH THE PIPE IS HYDROSTATICALLY TESTED, OR IF THERE IS NO HYDROSTATIC FIELD TEST, IT SHALL BE THE SPECIFIED SHOP TEST PRESSURE.
2. ORIENTATION OF FLOOR PIPE SHALL BE COORDINATED WITH CONNECTING PIPE AND TIE RODS, TIE RODS SHALL BE SPACED UNIFORMLY AROUND THE PIPE.
3. EXCEPT WHERE TIE RODS ARE REQUIRED, BOLTS FOR FOLLOWER RINGS SHALL BE BOLT-STUDS ON FLOOR PIPE. ALL BOLT HOLES IN FLOOR PIPE SHALL BE TAPPED. BOLT HOLES OF FLOOR PIPE SHALL BE ALIGNED WITH CONNECTING PIPE.
4. FOR STEEL AND OTHER PIPE APPLICATIONS, BUILD UP END OF STEEL PIPE TO FIT MJ WALL PIPE.
5. CURB MAY BE ROUND OR HEXAGONAL AT CONTRACTOR'S OPTION.
6. WHERE PIPE IS REQUIRED ON ONE SIDE OF THE SLAB ONLY, PROVIDE A MJxPE FITTING.
7. SLAB-ON-GRADE APPLICATIONS REQUIRE CONCRETE ENCASEMENT OF BELOW FLOOR PIPING. RESTRAINED STYLE JOINTS ARE REQUIRED WHERE PIPE IS CONCRETE ENCASED.
8. FOR PIPING FLEXIBILITY, PROVIDE GAP LARGE ENOUGH TO FACILITATE PIPE ASSEMBLY AND DISASSEMBLY AT ASSOCIATED FLANGE PIPE JOINTS.

D FLANGED-MECHANICAL JOINT FLOOR PIPE WITH TIE RODS
NO SCALE

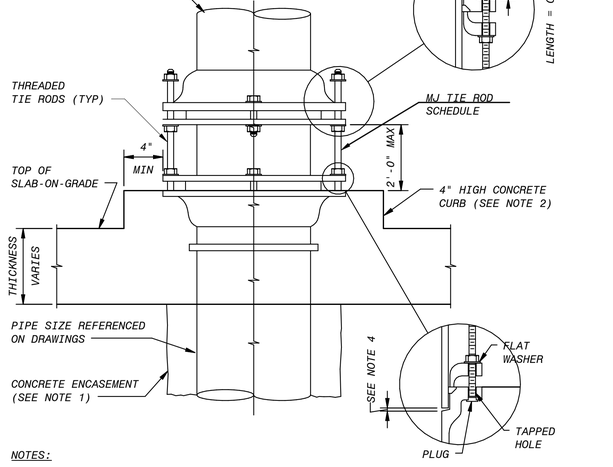

NOTES:

1. SLAB-ON-GRADE APPLICATIONS REQUIRE CONCRETE ENCASEMENT OF BELOW SLAB PIPING. RESTRAINED STYLE JOINTS ARE REQUIRED WHERE PIPE IS CONCRETE ENCASED.
2. CURB MAY BE ROUND OR HEXAGONAL AT CONTRACTOR'S OPTION AND POURED SEPARATELY.
3. EXCEPT WHERE TIE RODS ARE REQUIRED, BOLTS FOR THE FOLLOWER RINGS SHALL BE BOLT-STUDS ON FLOOR PIPE. ALL BOLT HOLES IN FLOOR PIPE SHALL BE TAPPED, BOLT HOLES OF FLOOR PIPE SHALL BE ALIGNED WITH CONNECTING PIPE.
4. FOR PIPING FLEXIBILITY, PROVIDE GAP LARGE ENOUGH TO FACILITATE PIPE ASSEMBLY AND DISASSEMBLY AT ASSOCIATED FLANGE PIPE JOINTS.
5. PRESSURE SHALL BE THE PRESSURE AT WHICH THE PIPE IS HYDROSTATICALLY TESTED, OR IF THERE IS NO HYDROSTATIC FIELD TEST, IT SHALL BE THE SPECIFIED SHOP TEST PRESSURE.

E MECHANICAL JOINT SLAB-ON-GRADE FLOOR PIPE 2
NO SCALE

90% SUBMITTAL - NOT FOR CONSTRUCTION

NO.	BY	CHK	APP	DATE	REVISIONS AND RECORD OF USE
B	KEZ	RWF	EVB	3/31/2020	90% SUBMITTAL
A	KEZ	RT	EVB	7/30/2019	60% SUBMITTAL

REGISTERED PROFESSIONAL ENGINEER — ERIK V. REYNOLDS — No. C 76836 — STATE OF CALIFORNIA

BLACK & VEATCH

JOINT VENTURE

BLACK & VEATCH

FILANC

CITY OF MORRO BAY
MORRO BAY WATER RECLAMATION FACILITY (WRF)

GENERAL
CIVIL-MECHANICAL
DETAILS

DESIGNED: KEZ
DETAILED: MAK
CHECKED:
APPROVED:
DATE:

0 1/2 1
IF THIS BAR DOES NOT MEASURE 1" THEN DRAWING IS NOT TO FULL SCALE

PROJECT NO.
400530

00-M-509
SHEET
OF XXX

PLOTTED: 3/24/2020 3:12:22 PM
D400530

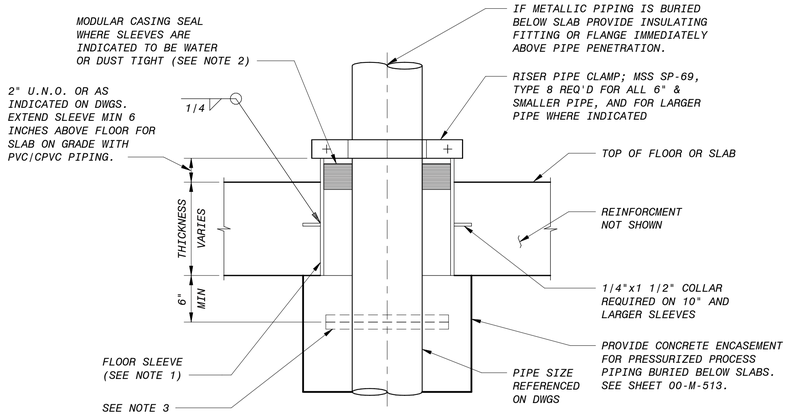

NOTES :

1. FLOOR SLEEVE, SCHEDULE 40 STEEL PIPE FOR 12" AND SMALLER SLEEVES, 1/4" STEEL PIPE FOR SLEEVES LARGER THAN 12", AND HOT DIP GALVANIZE AFTER FABRICATION. COORDINATE SIZE OF SLEEVE WITH MODULAR SEAL MANUFACTURER.
2. FIRESAFING TO BE PROVIDED AT ALL RATED LOCATIONS INDICATED ON THE DRAWINGS AND INSTALLED PER ACCEPTED UL RATED SYSTEMS.
3. TO MINIMIZE SLEEVE SIZE PROVIDE A SCREW-ON FLANGE, GROOVED COUPLING, OR MECHANICAL COUPLING WITH ANCHOR STUDS ON ONE SIDE OF OPENING.

A STEEL FLOOR SLEEVE
NO SCALE

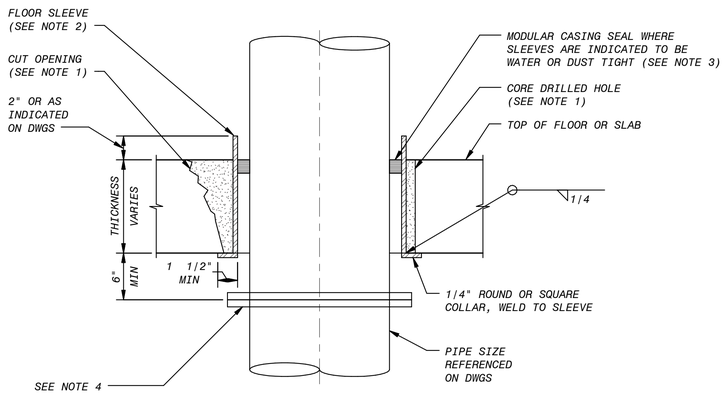

NOTES:

1. FOR SLEEVE OPENINGS SMALLER THAN 12 INCHES IN DIAMETER, CORE DRILLED OPENINGS MAY BE USED. FOR LARGER SLEEVES CUT AND BREAK OUT OPENINGS AS NOTED ON THE DRAWINGS. APPLY BONDING AGENT TO EXISTING CONCRETE AND FILL SPACE WITH NON-SHRINK GROUT.
2. FLOOR SLEEVE, SCHEDULE 40 STEEL PIPE FOR 12" AND SMALLER SLEEVES, 1/4" STEEL PIPE FOR SLEEVES LARGER THAN 12", AND HOT DIP GALVANIZED AFTER FABRICATION. COORDINATE SIZE OF SLEEVE WITH MODULAR SEAL MANUFACTURER.
3. FIRESAFING TO BE PROVIDED AT ALL RATED LOCATIONS INDICATED ON THE DRAWINGS AND INSTALLED PER ACCEPTED UL RATED SYSTEMS.
4. TO MINIMIZE SLEEVE SIZE PROVIDE A SCREW-ON FLANGE, GROOVED COUPLING, OR MECHANICAL COUPLING WITH ANCHOR STUDS ON ONE SIDE OF OPENING.

B 003-271 - EXISTING FLOOR SLEEVE
NO SCALE

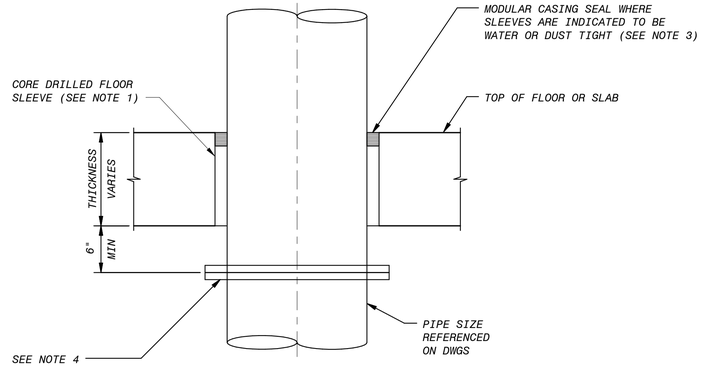

NOTES:

1. CORE DRILL SMOOTH FLOOR OPENING AND COORDINATE DIAMETER WITH MODULAR CASING SEAL MANUFACTURER, MAXIMUM CORE DIAMETER 12".
3. FIRESAFING TO BE PROVIDED AT ALL RATED LOCATIONS INDICATED ON THE DRAWINGS AND INSTALLED PER ACCEPTED UL RATED SYSTEMS.
4. TO MINIMIZE SLEEVE SIZE PROVIDE A SCREW-ON FLANGE, GROOVED COUPLING, OR MECHANICAL COUPLING WITH ANCHOR STUDS ON ONE SIDE OF OPENING.

C 003-272 - CORE DRILLED FLOOR SLEEVE
NO SCALE

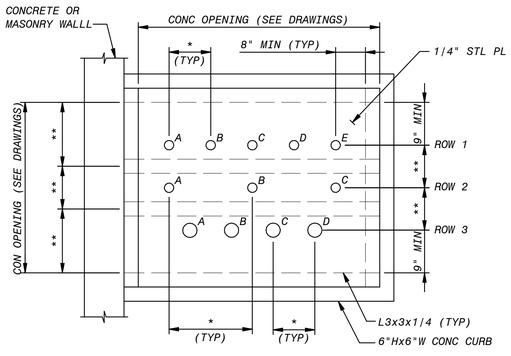

* SEE PIPE SPACING SCHEDULE FOR MINIMUM SPACING
** SPACING AS REQUIRED AND ADJUSTED FOR PIPING SIZE

PLAN

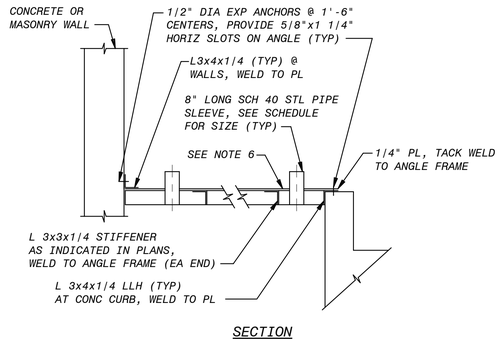

SECTION

PANEL SLEEVE SCHEDULE	
SOLUTION OR GAS LINE SIZE (INCHES)	SCHEDULE 40 NOMINAL SLEEVE SIZE (INCHES)
3/4	1 1/2
1	2
1 1/2	2 1/2
2	3
2 1/2,3	4
4	5

PIPE SPACING SCHEDULE MINIMUM CENTERLINE TO CENTERLINE SPACING IN INCHES							
	PIPE SIZE (INCHES)						
PIPE SIZE (INCHES)	3/4	1	1 1/2	2	2 1/2	3	4
3/4	4 1/2	4 3/4	5 1/4	6	6 3/4	6 3/4	6 3/4
1	-	5	5 1/2	6	7	7	7
1 1/2	-	-	6 1/4	6 3/4	7 1/2	7 1/2	7 1/2
2	-	-	-	7 1/4	8 1/4	8 1/4	9
2 1/2	-	-	-	-	9	9	10
3	-	-	-	-	-	9	10
4	-	-	-	-	-	-	12

D TYPICAL FLOOR SLEEVE PANEL
NO SCALE

PANEL PIPING SCHEDULE			
PIPE DESIGNATION		PIPE SIZE (INCHES)	PIPE SERVICE
ROW	LETTER		
1	A	-	-
1	B	-	-
1	C	-	-
1	D	-	-
1	E	-	-
2	A	-	-
2	B	-	-
2	C	-	-
3	A	-	-
3	B	-	-
3	C	-	-
3	D	-	-

NOTES :

1. SEE PANEL PIPING SCHEDULE FOR PIPING SIZE AND SERVICE.
2. WHERE LINES ARE INDICATED ON PIPING SCHEDULE TO BE FUTURE, INSTALL SLEEVES WITH THREADED ENDS OF THE SIZE AS INDICATED IN PANEL SLEEVE SCHEDULE. FILL SLEEVE WITH SAFING INSULATION AS REQUIRED AND INSTALL THREADED CAPS.
3. PIPE SPACING SHALL BE UNIFORM WITHIN THE OPENING, WITH MINIMUM SPACING AND ALLOWANCES AS INDICATED.
4. CONTRACTOR SHALL COORDINATE THE SPACING AND ALLOWANCES OF ALL PIPING AND SLEEVES PRIOR TO FABRICATION OF PANEL.
5. FIRESAFEING SHALL BE PROVIDED AT ALL RATED LOCATIONS INDICATED ON THE DRAWINGS AND INSTALLED PER ACCEPTED UL RATED SYSTEMS.
6. ALL PANEL MATERIAL, EXCEPT SLEEVES, SHALL BE 1/4" STEEL PL WELDED CONSTRUCTION. IN EXTERIOR LOCATIONS PIPE SLEEVES SHALL BE SEAL WELDED ALL AROUND.

90% SUBMITTAL - NOT FOR CONSTRUCTION

NO.	BY	CHK	APP	DATE	REVISIONS AND RECORD OF USE
B	KEZ	RWF	EVB	3/31/2020	90% SUBMITTAL
A	KEZ	RT	EVB	7/30/2019	60% SUBMITTAL

REGISTERED PROFESSIONAL ENGINEER — ERIK V. REVENAUGH — No. C 76836 — STATE OF CALIFORNIA — CIVIL

BLACK & VEATCH
JOINT VENTURE
FILANC
BLACK & VEATCH

CITY OF MORRO BAY
MORRO BAY WATER
RECLAMATION FACILITY (WRF)

GENERAL
CIVIL-MECHANICAL
DETAILS

DESIGNED: KEZ
DETAILED: MAK
CHECKED:
APPROVED:
DATE:

0 1/2 1
IF THIS BAR DOES NOT MEASURE 1" THEN DRAWING IS NOT TO FULL SCALE

PROJECT NO.
400530

00-M-510
SHEET
OF XXX

PLOTTED: 3/24/2020 3:12:24 PM
D400530

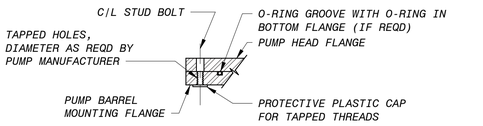

MOUNTING FLANGE CONNECTION DETAIL

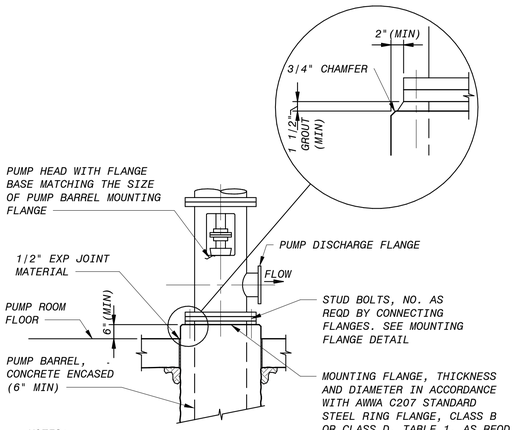

NOTES:
1. AIR VALVES FOR PUMP AND PUMP BARREL ARE NOT SHOWN
2. CONTACT SURFACES BETWEEN PUMP HEAD AND MOUNTING FLANGE SHALL BE MACHINED.

A VERTICAL DIFFUSION VANE PUMP BARREL INSTALLATION DETAILS
NO SCALE

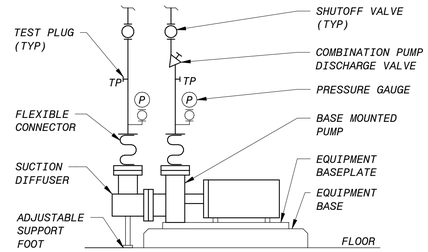

B END SUCTION CENTRIFUGAL PUMP PIPING
NO SCALE

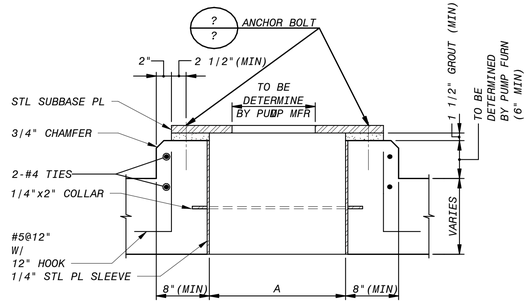

PUMP	A

D VERTICAL DIFFUSION PUMP BASE
NO SCALE

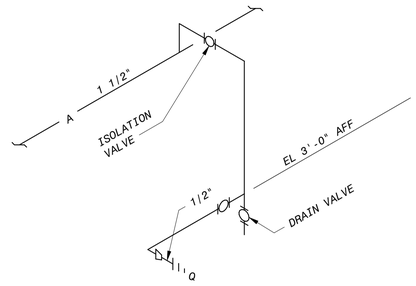

E SERVICE AIR OUTLET PIPING
NO SCALE

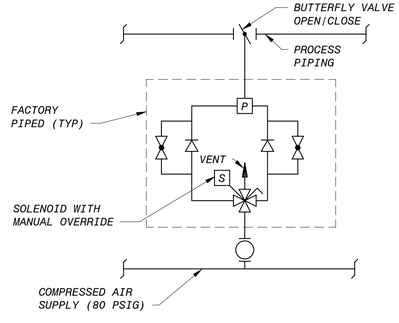

H AIR CYLINDER ACTUATOR - OPEN/CLOSE
NO SCALE

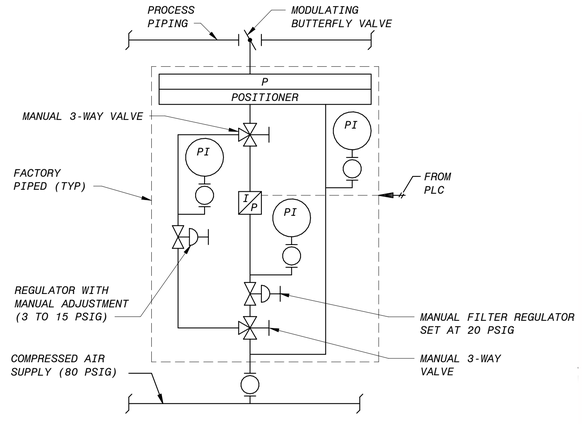

I AIR CYLINDER ACTUATOR - MODULATING
NO SCALE

90% SUBMITTAL - NOT FOR CONSTRUCTION

NO.	BY	CHK	APP
B	KEZ	RWF	EVB
A	KEZ	RT	EVB

REVISIONS AND RECORD OF USE

DATE	
3/31/2020	90% SUBMITTAL
7/30/2019	60% SUBMITTAL

REGISTERED PROFESSIONAL ENGINEER ERICK V. BEVINGTON No. C 78836 CIVIL STATE OF CALIFORNIA

BLACK & VEATCH
JOINT VENTURE
FILANC
BLACK & VEATCH

CITY OF MORRO BAY
MORRO BAY WATER RECLAMATION FACILITY (WRF)

GENERAL CIVIL-MECHANICAL DETAILS

DESIGNED: KEZ
DETAILED: MAK
CHECKED:
APPROVED:
DATE:

0 1/2 1
IF THIS BAR DOES NOT MEASURE 1" THEN DRAWING IS NOT TO FULL SCALE

PROJECT NO. 400530

00-M-511
SHEET OF XXX

PLOTTED: 3/24/2020 3:12:27 PM
D400530

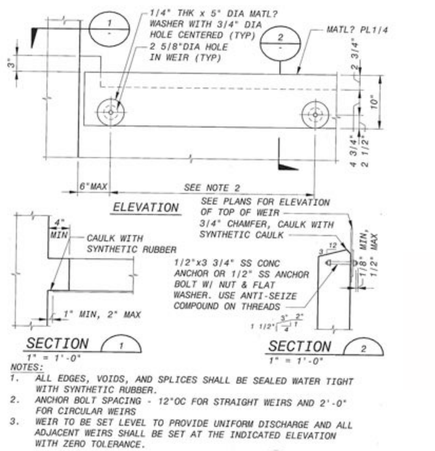

NOTES:
1. ALL EDGES, VOIDS, AND SPLICES SHALL BE SEALED WATER TIGHT WITH SYNTHETIC RUBBER.
2. ANCHOR BOLT SPACING - 12"OC FOR STRAIGHT WEIRS AND 2'-0" FOR CIRCULAR WEIRS
3. WEIR TO BE SET LEVEL TO PROVIDE UNIFORM DISCHARGE AND ALL ADJACENT WEIRS SHALL BE SET AT THE INDICATED ELEVATION WITH ZERO TOLERANCE.

A SHARP CRESTED WEIR
NO SCALE

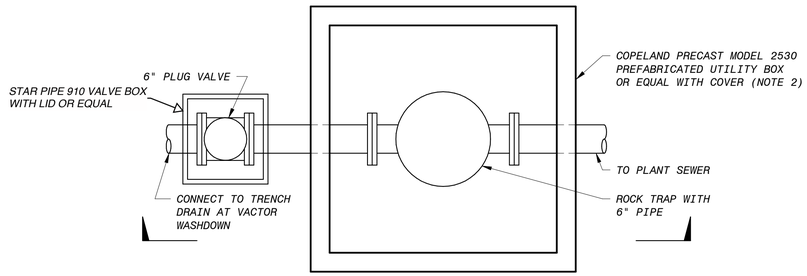

PLAN

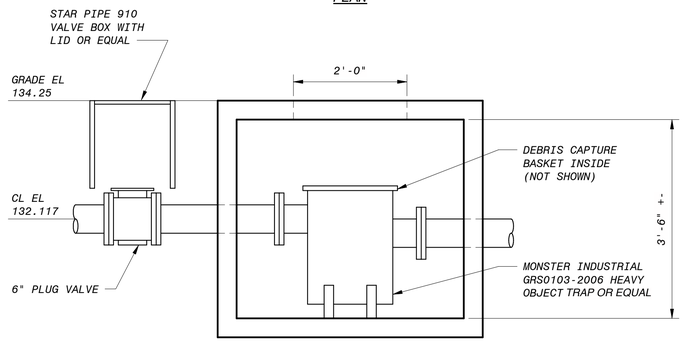

SECTION

B VACTOR WASHDOWN DRAIN ASSEMBLY
NO SCALE

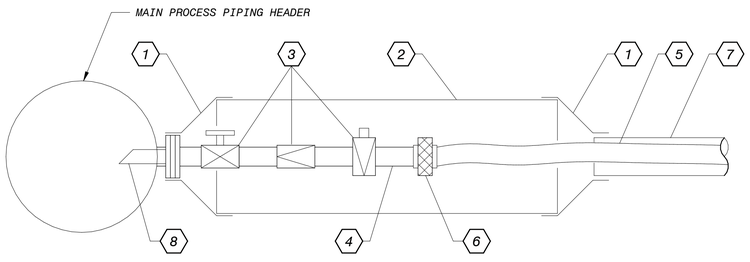

1. FLEXIBLE COUPLING WITH BAND CLAMP ENDS. FERNCO FLEXIBLE CHEMICAL COUPLING OR EQUAL.
2. CLEAR SPLIT PVC PIPING - 6" DIAMETER. CENTRALLY SPLIT FOR ACCESS TO EQUIPMENT. GEORGE FISHER "CONTAIN-IT" OR EQUAL.
3. VALVES - REFER TO P&IDs AND VALVE LIST FOR INFO/SIZING.
4. HARD PIPING - REFER TO P&IDs FOR INFO/SIZING.
5. TUBING - REFER TO P&IDs FOR INFO/SIZING.
6. HARD PIPE TO TUBING ADAPTER.
7. SECONDARY CONATINMENT PIPING - REFER TO P&ID FOR INFO.
8. CHEMICAL INJECTION QUILL.

E INJECTION POINT DETAIL
3" = 1'-0"

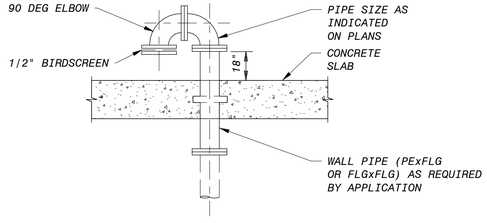

G GOOSENECK VENT - TANK
NO SCALE

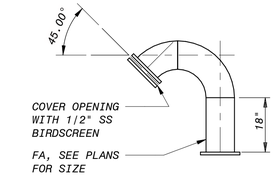

H GOOSENECK VENT - PIPE
NO SCALE

90% SUBMITTAL - NOT FOR CONSTRUCTION

NO.	BY	CHK	APP	DATE	REVISIONS AND RECORD OF USE
B	KEZ	RWF	EVB	3/31/2020	90% SUBMITTAL
A	KEZ	RT	EVB	7/30/2019	60% SUBMITTAL

REGISTERED PROFESSIONAL ENGINEER — ERIK V. REYNOLDS — No. C 78836 — STATE OF CALIFORNIA

BLACK & VEATCH

JOINT VENTURE

BLACK & VEATCH

FILANC

CITY OF MORRO BAY
MORRO BAY WATER RECLAMATION FACILITY (WRF)

GENERAL
CIVIL-MECHANICAL
DETAILS

DESIGNED: KEZ
DETAILED: JPS
CHECKED:
APPROVED:
DATE:

0 1/2 1
IF THIS BAR DOES NOT MEASURE 1" THEN DRAWING IS NOT TO FULL SCALE

PROJECT NO.
400530

00-M-512
SHEET
OF XXX

PLOTTED: 3/24/2020 3:12:28 PM
D400530

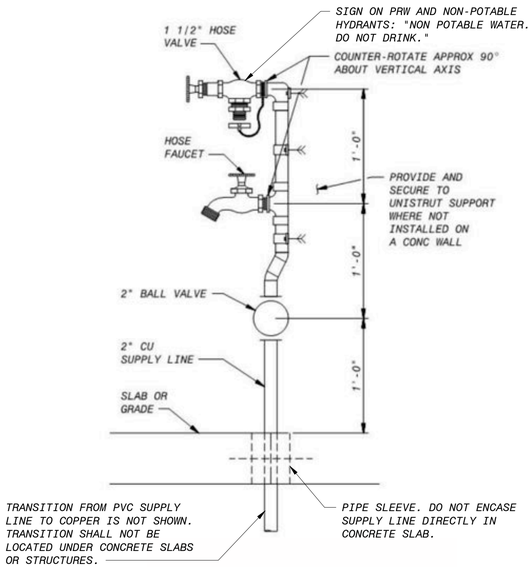

NOTE:
REFER TO SPECIFICATION 40 05 51 FOR ADDITIONAL INFORMATION

A YARD HYDRANT DETAIL
NO SCALE

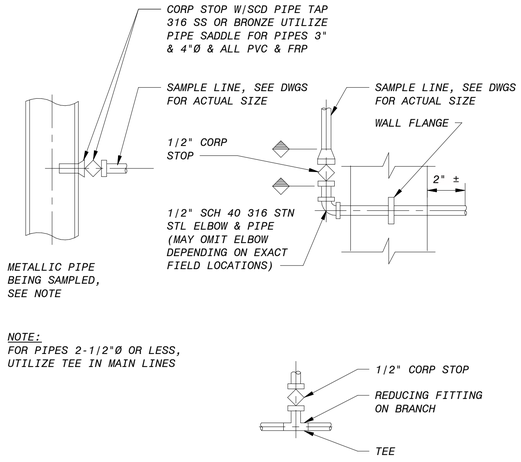

NOTE:
FOR PIPES 2-1/2"Ø OR LESS, UTILIZE TEE IN MAIN LINES

B SAMPLE TAP CONNECTION
3" = 1'-0"

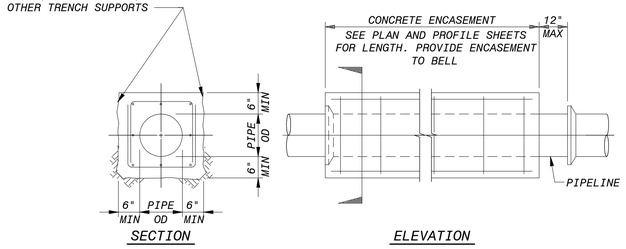

SECTION ELEVATION

NOTE:
1. HOLD BACK ENCASEMENT 6 INCHES FROM MATERIAL TRANSITIONS TO ACCOMMODATE ASSEMBLY.
2. PROVIDE REINFORCING WHERE LESS THAN MIN ALLOWABLE COVER OVER BURIED PIPING EXCEPT FOR VERTICAL PIPE NEAR GRADE. SIZE AND SPACING TO BE PER ENGINEER OF RECORD.
3. PROVIDE MIN 3 INCHES COVER OVER BELLS AND FLANGES.

C CONCRETE ENCASEMENT
00-M-508 12" = 1'-0"

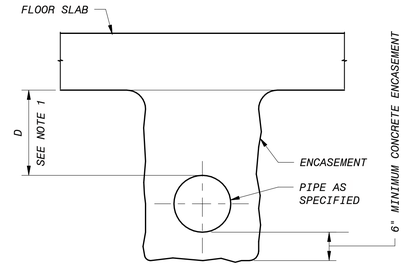

NOTE:
1. IF D IS LESS THAN 1'-6", PROVIDE ENCASEMENT CONTINUOUS TO SLAB IF D IS GREATER THAN 1'-6", ENCASEMENT MAY BE SEPARATED FROM SLAB
2. PROVIDE MIN 3 INCHES COVER OVER BELLS AND FLANGES.

D CONCRETE ENCASEMENT FOR PIPE UNDER SLABS
3/4" = 1'-0"

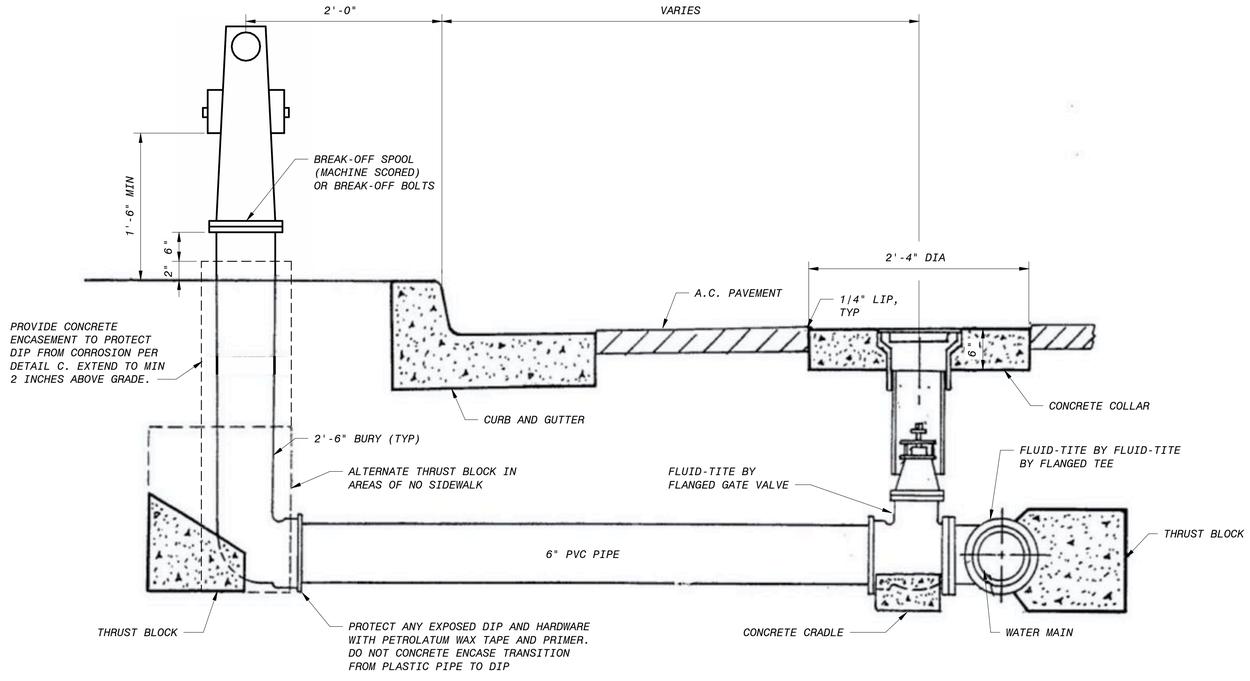

NOTES:

1. CONCRETE COLLAR, CRADLE, AND THRUST BLOCKS SHALL HAVE A MINIMUM 2500 PSI COMPRESSIVE STRENGTH IN 28 DAYS.
2. VALVE BOX, COVER, AND EXTENSION SHALL BE BROOKS NO 3RT, OR EQUAL AS APPROVED BY PUBLIC WORKS DEPARTMENT. COVER SHALL BE MARKED "WATER".
3. SEE CITY OF MORRO BAY DRAWING W-2 FOR THRUST BLOCK DETAILS.
4. FIRE HYDRANT SHALL HAVE ONE (1) 4-1/2" OUTLET AND TWO (2) 2-1/2" OUTLETS, RICH 960 OR APPROVED EQUAL.
5. PROVIDE TWO GUARD POSTS ADJACENT TO FIRE HYDRANT, ONE EACH SIDE OF HYDRANT, PARALLEL TO ROADWAY. PROVIDE 3 FT CLEARANCE BETWEEN HYDRANT AND GUARDPOST.
6. ELIMINATE THRUST BLOCKS WHERE PIPING IS RESTRAINED IF ALLOWED BY CITY.
7. BURIED FLANGE HARDWARE SHALL BE 316 STAINLESS STEEL. ALL BURIED METALLIC PIPING (WHERE NOT CONCRETE ENCASED) AND HARDWARE SHALL BE PROTECTED WITH PETROLATUM WAX TAPE AND PRIMER.

E DETAIL
NO SCALE

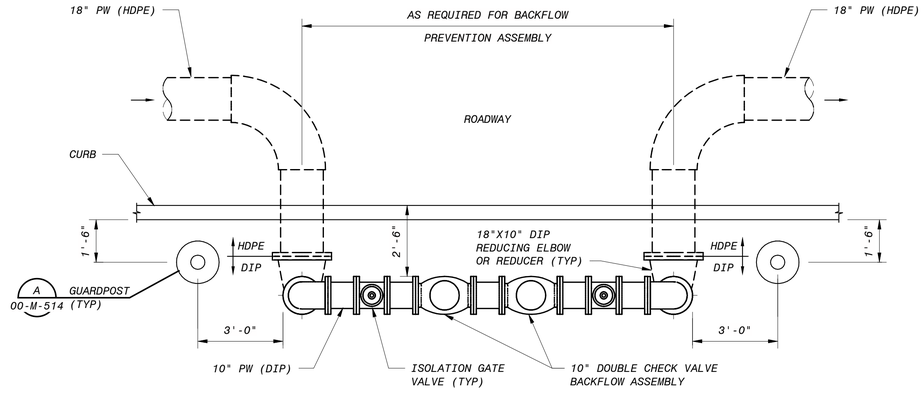

PLAN

NOTES:
1. DOUBLE-CHECK-DETECTOR CHECK BACKFLOW PREVENTER ASSEMBLY (DCDA) SHALL BE IN ACCORDANCE WITH SECTION 7601 OF TITLE 17 OF THE CALIFORNIA CODE OF REGULATIONS AND APPROVED BY THE UNIVERSITY OF SOUTHERN CALIFORNIA FOUNDATION FOR CROSS-CONNECTION CONTROL AND HYDRAULIC RESEARCH. CONTACT THE CITY FOR A LIST OF APPROVED ASSEMBLIES.
2. THE DCDA SHALL BE A SPECIALLY DESIGNED ASSEMBLY COMPOSED OF A LINE-SIZE APPROVED DOUBLE CHECK VALVE ASSEMBLY, TEST COCKS, AND A BYPASS CONTAINING AN APPROVED WATER METER AND DOUBLE CHECK VALVE ASSEMBLY.
3. ALL FITTINGS SMALLER THAN 3" DIA. SHALL BE COPPER WITH LEAD FREE SOLDER OR LEAD-FREE BRASS.
4. ALL RISERS AND ABOVE GROUND MAIN LINE PIPING SHALL BE CEMENT MORTAR LINED FLANGED DIP.
5. MATERIALS SHALL BE UL LISTED FOR FIRE SERVICE.
6. PROVIDE CLEARANCES AROUND DEVICE PER MANUFACTURER'S RECOMMENDATIONS AND ADEQUATE FOR TESTING.
7. GATE VALVES SHALL BE OUTSIDE STEM AND YOKE TYPE RESILIENT SEATED TYPE.
8. DOUBLE CHECK DETECTOR METER SHALL BE SUPPLIED WITH REGISTER THAT MEASURES IN CU FT.
9. BACKFLOW PREVENTION ASSEMBLY SHALL BE INSTALLED ABOVE GROUND WITH 12 TO 24 INCHES CLEARANCE.
10. A MINIMUM OF ONE ADJUSTABLE PIPE SUPPORT SHALL BE PROVIDED UNDER THE ASSEMBLY. PROVIDE TYPICAL EQUIPMENT SUPPORT SLAB FOR SUPPORT.
11. THRUST BLOCKS SHALL BE PROVIDED AT ELBOWS AND SHALL BE PER CITY OF MORRO BAY STANDARD DETAIL W-2 UNLESS OTHERWISE ALLOWED BY CITY.
12. PROVIDE VALVE SUPERVISORY TAMPER SWITCHES ON THE ISOLATION GATE VALVES OF BACKFLOW PREVENTER ASSEMBLY.
13. TRANSITION BETWEEN DIP AND HDPE SHALL BE AT THE BURIED FLANGES INDICATED AND SHALL BE PER THE REQUIREMENTS OF DETAIL E/00-M-508.

F DOUBLE CHECK VALVE BACKFLOW PREVENTER ASSEMBLY ENLARGED VIEW
3/8" = 1'-0"

90% SUBMITTAL - NOT FOR CONSTRUCTION

NO.	BY	CHK	APP	DATE	REVISIONS AND RECORD OF USE
A	KEZ	RWF	EVB	3/31/2020	90% SUBMITTAL

REGISTERED PROFESSIONAL ENGINEER DREW V. REYNOLDS No. C 76836 STATE OF CALIFORNIA

BLACK & VEATCH
JOINT VENTURE
BLACK & VEATCH
FILANC

CITY OF MORRO BAY
MORRO BAY WATER
RECLAMATION FACILITY (WRF)

GENERAL
CIVIL - MECHANICAL
DETAILS

DESIGNED: KEZ
DETAILED: JPS
CHECKED:
APPROVED:
DATE:

0 1/2 1
IF THIS BAR DOES NOT MEASURE 1" THEN DRAWING IS NOT TO FULL SCALE

PROJECT NO.
400530

00-M-513
SHEET
OF XXX

PLOTTED: 3/24/2020 3:12:30 PM
D400530

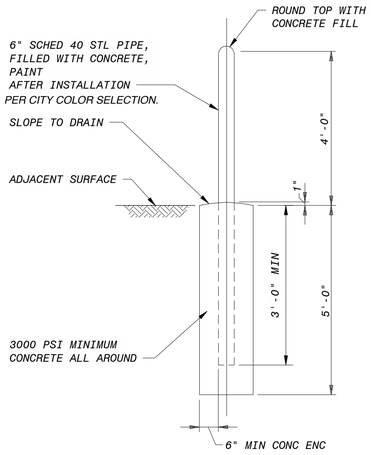

A GUARD POST DETAIL

00-M-513 12" = 1'-0"

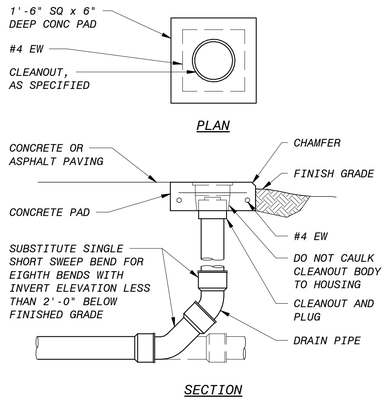

B GRADE CLEANOUT

12" = 1'-0"

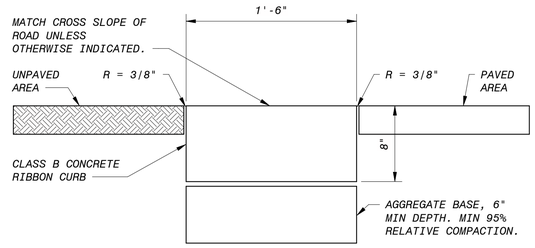

NOTES:

1. 1/4" EXPANSION JOINTS SHALL BE INSTALLED AT 24 FT INTERVALS AND SHALL BE PER CITY OF MORRO BAY STANDARDS.
2. BROOM FINISH ALL SURFACES.

C RIBBON CURB

1 1/2" = 1'-0"

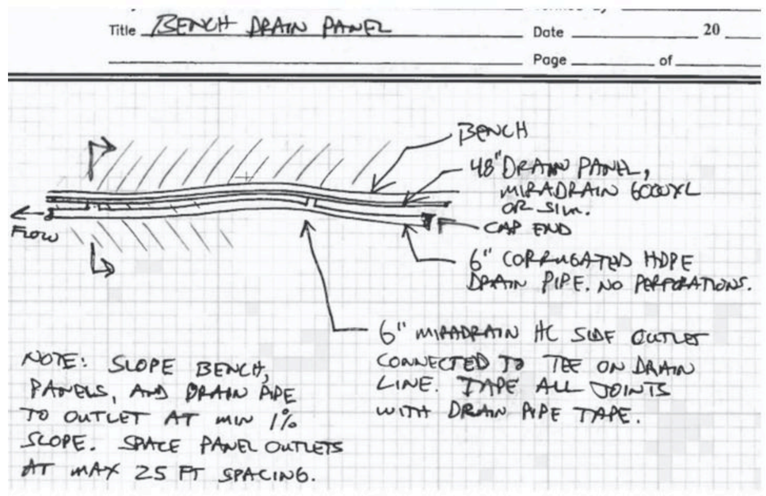

D BENCH DRAIN PANEL

12" = 1'-0"

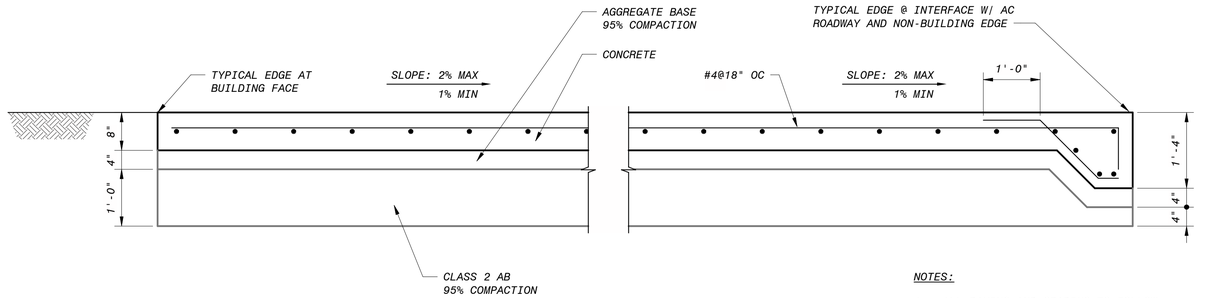

NOTES:

1. ALL PAVING AND GRADING TO FOLLOW ELEVATIONS SET BY CONTOURS ON PLAN UNLESS OTHERWISE NOTED.
2. MINIMUM CLEAR COVER OF 3" SHALL BE USED FOR ALL REINFORCING.
3. FULL DEPTH CONSTRUCTION JOINTS SHALL BE AT 10 FT CENTERS EACH WAY. PROVIDE #4 SMOOTH JOINT DOWELS AT 18" EACH WAY.

E CONCRETE PAVEMENT TYPICAL CROSS SECTION

3/4" = 1'-0"

90% SUBMITTAL - NOT FOR CONSTRUCTION

NO.	BY	CHK	APP	DATE	REVISIONS AND RECORD OF USE
A	KEZ	RWF	EVB	3/31/2020	90% SUBMITTAL

REGISTERED PROFESSIONAL ENGINEER — ERIK V. REYNOLDS — No. C 76836 — STATE OF CALIFORNIA

BLACK & VEATCH JOINT VENTURE — BLACK & VEATCH — FILANC

CITY OF MORRO BAY
MORRO BAY WATER RECLAMATION FACILITY (WRF)

GENERAL
CIVIL - MECHANICAL
DETAILS

DESIGNED: KEZ
DETAILED: JPS
CHECKED:
APPROVED:
DATE:

0 1/2 1
IF THIS BAR DOES NOT MEASURE 1" THEN DRAWING IS NOT TO FULL SCALE

PROJECT NO. 400530

00-M-514
SHEET OF XXX

PLOTTED: 3/24/2020 3:12:31 PM
D400530

SECTION 1/12-C-102, 12-C-103

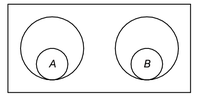

	CHEMICAL	FLUID PIPE	CARRIER PIPE	DOSING POINT
A	SPARE	N/A	2" CPVC	N/A
B	SODIUM BISULFITE	1/2" POLYETHYLENE	2" CPVC	TO DECHLOR STATION

SECTION 2/12-C-103

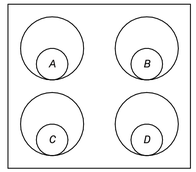

	CHEMICAL	FLUID PIPE	CARRIER PIPE	DOSING POINT
A	SPARE	N/A	2" CPVC	N/A
B	SODIUM HYPOCHLORITE	1/2" TEFLON	2" CPVC	TO PROD WATER INLET
C	SODIUM HYPOCHLORITE	1/2" TEFLON	2" CPVC	TO OUTFALL DISINFECTION
D	SODIUM HYDROXIDE	1/2" POLYETHYLENE	2" CPVC	TO PROD WATER INLET

SECTION 3/12-C-103

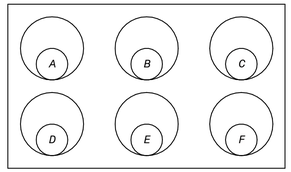

	CHEMICAL	FLUID PIPE	CARRIER PIPE	DOSING POINT
A	SPARE	N/A	2" CPVC	N/A
B	SODIUM BISLUFITE	1/2" POLYETHYLENE	2" CPVC	TO DECHLOR STATION
C	SODIUM HYPOCHLORITE	1/2" TEFLON	2" CPVC	TO PROD WATER INLET
D	SPARE	N/A	2" CPVC	N/A
E	SODIUM HYPOCHLORITE	1/2" TEFLON	2" CPVC	TO OUTFALL DISINFECTION
F	SODIUM HYDROXIDE	1/2" POLYETHYLENE	2" CPVC	TO PROD WATER INLET

SECTION 4/12-C-103

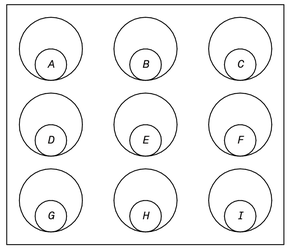

	CHEMICAL	FLUID PIPE	CARRIER PIPE	DOSING POINT
A	SODIUM HYPOCHLORITE	1/2" TEFLON	2" CPVC	BYPASS TO OCEAN OUTFALL
B	CITRIC ACID	1/2" POLYETHYLENE	2" CPVC	RO CIP SYSTEM
C	SULFURIC ACID	1/2" TEFLON	2" CPVC	UPSTREAM OF RO SYSTEM
D	SULFURIC ACID	1/2" TEFLON	2" CPVC	UPSTREAM OF UV SYSTEM
E	SODIUM HYDROXIDE	3/4" POLYETHYLENE	2" CPVC	RO CIP SYSTEM
F	SPARE	N/A	2" CPVC	N/A
G	SODIUM HYPOCHLORITE	1/2" TEFLON	2" CPVC	UPSTREAM OF UV SYSTEM
H	FUTURE LAS	N/A	2" CPVC	N/A
I	ANTISCALANT	1/2" POLYETHYLENE	2" CPVC	UPSTREAM OF RO SYSTEM

SECTION 5/12-C-103, 12-C-104

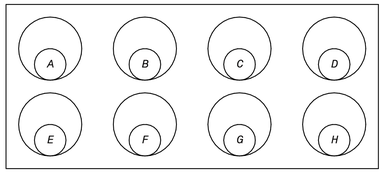

	CHEMICAL	FLUID PIPE	CARRIER PIPE	DOSING POINT
A	SODIUM HYPOCHLORITE	1/2" TEFLON	2" CPVC	PLANT WATER DISCHARGE PUMP
B	SODIUM HYPOCHLORITE	1/2" TEFLON	2" CPVC	UPSTREAM OF RO SYSTEM
C	SODIUM HYPOCHLORITE	3/4" TEFLON	2" CPVC	MBR SYSTEM FOR CLEANING
D	CITRIC ACID	3/4" POLYETHYLENE	2" CPVC	MBR SYSTEM FOR CLEANING
E	SODIUM HYDROXIDE	1/2" POLYETHYLENE	2" CPVC	BNR BASIN INFLUENT
F	SPARE	N/A	2" CPVC	N/A
G	LAS	1/2" POLYETHYLENE	2" CPVC	UPSTREAM OF RO SYSTEM
H	SPARE	N/A	2" CPVC	N/A

SECTION 6/12-C-104

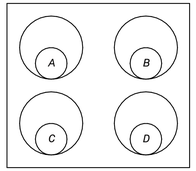

	CHEMICAL	FLUID PIPE	CARRIER PIPE	DOSING POINT
A	SODIUM HYPOCHLORITE	1/2" TEFLON	2" CPVC	MBR SYSTEM FOR CLEANING
B	SODIUM HYDROXIDE	1/2" POLYETHYLENE	2" CPVC	BNR BASIN INFLUENT
C	CITRIC ACID	1/2" POLYETHYLENE	2" CPVC	MBR SYSTEM FOR CLEANING
D	SPARE	N/A	2" CPVC	N/A

SECTION 7/12-C-104

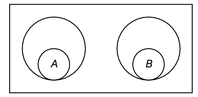

	CHEMICAL	FLUID PIPE	CARRIER PIPE	DOSING POINT
A	SODIUM HYDROXIDE	1/2" POLYETHYLENE	2" CPVC	BNR BASIN INFLUENT
B	SPARE	N/A	2" CPVC	N/A

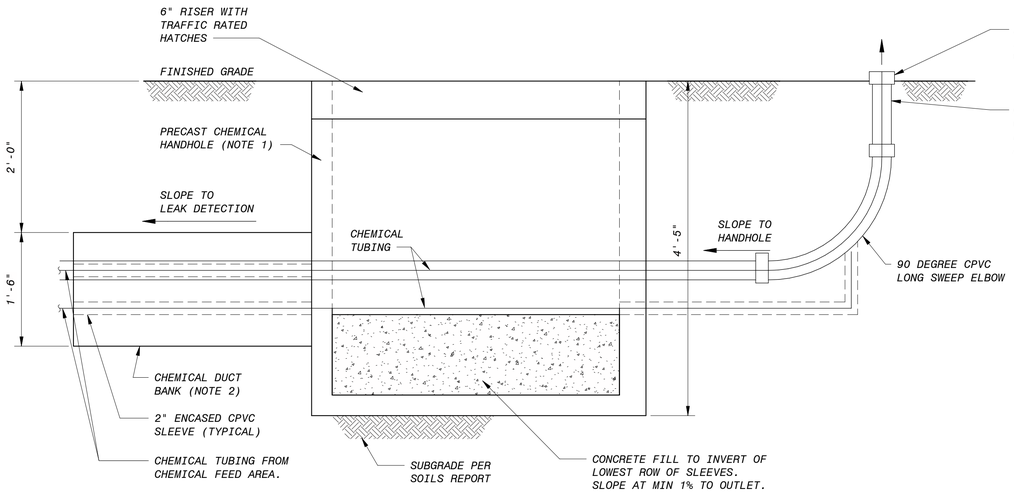

NOTES:

1. CHEMICAL HANDHOLES SHALL BE TRAFFIC RATED PRECAST CONCRETE STRUCTURES MEASURING APPROXIMATELY 4 FT SQUARE. JENSEN PRECAST MODEL 4848 PULL BOX OR EQUAL. INSTALL TOP COVER FLUSH WITH GRADE. WALLS AND FLOOR INSIDE OF HANDHOLES SHALL BE THOROUGHLY SEALED AND LEAK TESTED. WALLS AND FLOORS SHALL NOT HAVE ANY EXPOSED METALLIC COMPONENTS AND THE CONCRETE SHALL BE COATED WITH CHEMICAL RESISTANT EPOXY COATING AS DESCRIBED IN SPECIFICATION 09 97 24. RESPECTIVE CHEMICAL DUCT BANKS NORTH AND SOUTH OF CHEMICAL BUILDING SHALL SLOPE BETWEEN HANDHOLES TO LEAK DETECTION SYSTEM IN LOWEST HANDHOLE. TO ENSURE POSITIVE DRAINAGE BETWEEN HANDHOLES PROVIDE CONCRETE FILL IN FLOOR OF ALL HANDHOLES TO BRING FLOOR UP TO INVERT OF LOWEST OUTLET SLEEVE PRIOR TO COATING. WHERE POSSIBLE, LOWEST HANDHOLE SHALL HAVE OVERFLOW TO CHEMICAL STORAGE AREA.
2. SEE CHEMICAL DUCT BANK SECTIONS ON THIS SHEET.
3. DEPENDING ON THE SELECTED PRE-CAST PULL BOX, CHEMICAL DUCTS MAY NEED TO BE ADJUSTED TO FIT THROUGH THE KNOCK-OUT SPACES PROVIDED.

8 TYPICAL CHEMICAL HANDHOLE SECTION
1" = 1'-0"

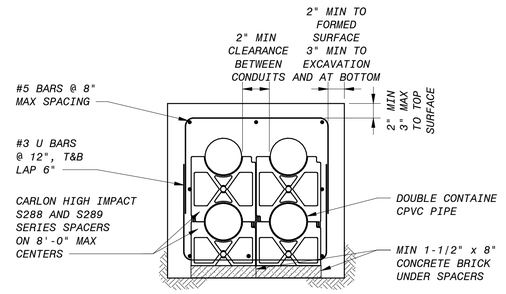

NOTES:

1. 1" MIN CLEARNACE BETWEEN CONDUITS AND REBAR.
2. 3" MIN CONCRETE BETWEEN EARTH AND CONDUIT.
3. REFER TO DETAILS 1-7 TO DETERMINE THE QUANTITY OF DOUBLE CONTAINED CPVC PIPE.

TYPICAL REINFORCED DUCT BANK SECTION
NO SCALE

90% SUBMITTAL - NOT FOR CONSTRUCTION

NO.	BY	CHK	APP	DATE	REVISIONS AND RECORD OF USE
A	KEZ	RWF	EVB	3/31/2020	90% SUBMITTAL

REGISTERED PROFESSIONAL ENGINEER — ERICK V. REVILLA — No. C 78836 — STATE OF CALIFORNIA

BLACK & VEATCH JOINT VENTURE — BLACK & VEATCH — FILANC

CITY OF MORRO BAY
MORRO BAY WATER RECLAMATION FACILITY (WRF)

GENERAL
CIVIL - MECHANICAL
DETAILS

DESIGNED: KEZ
DETAILED: MAK
CHECKED:
APPROVED:
DATE:

0 1/2 1
IF THIS BAR DOES NOT MEASURE 1" THEN DRAWING IS NOT TO FULL SCALE

PROJECT NO.
400530

00-M-515
SHEET
OF XXX

PLOTTED: 3/24/2020 3:12:33 PM
D400530

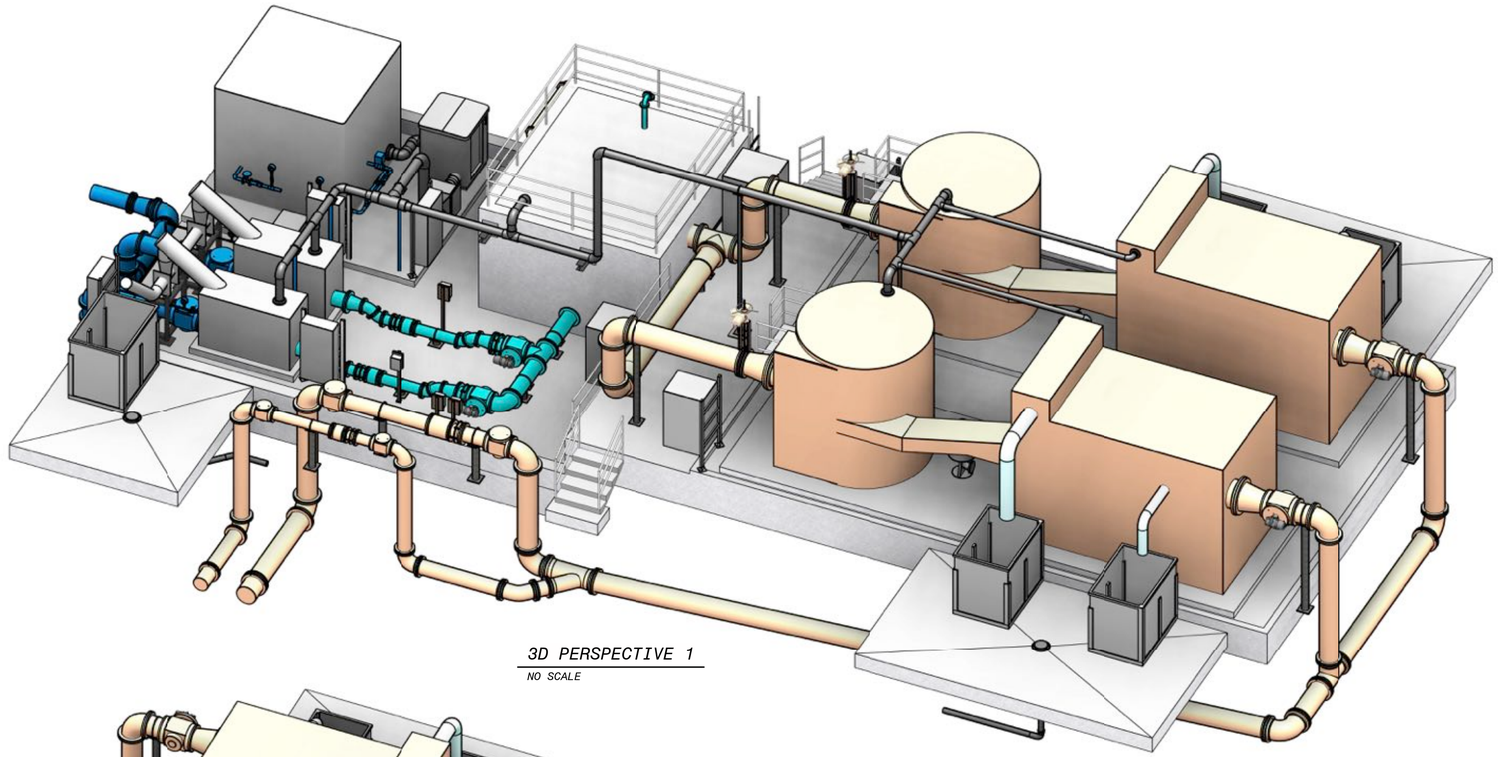

3D PERSPECTIVE 1
NO SCALE

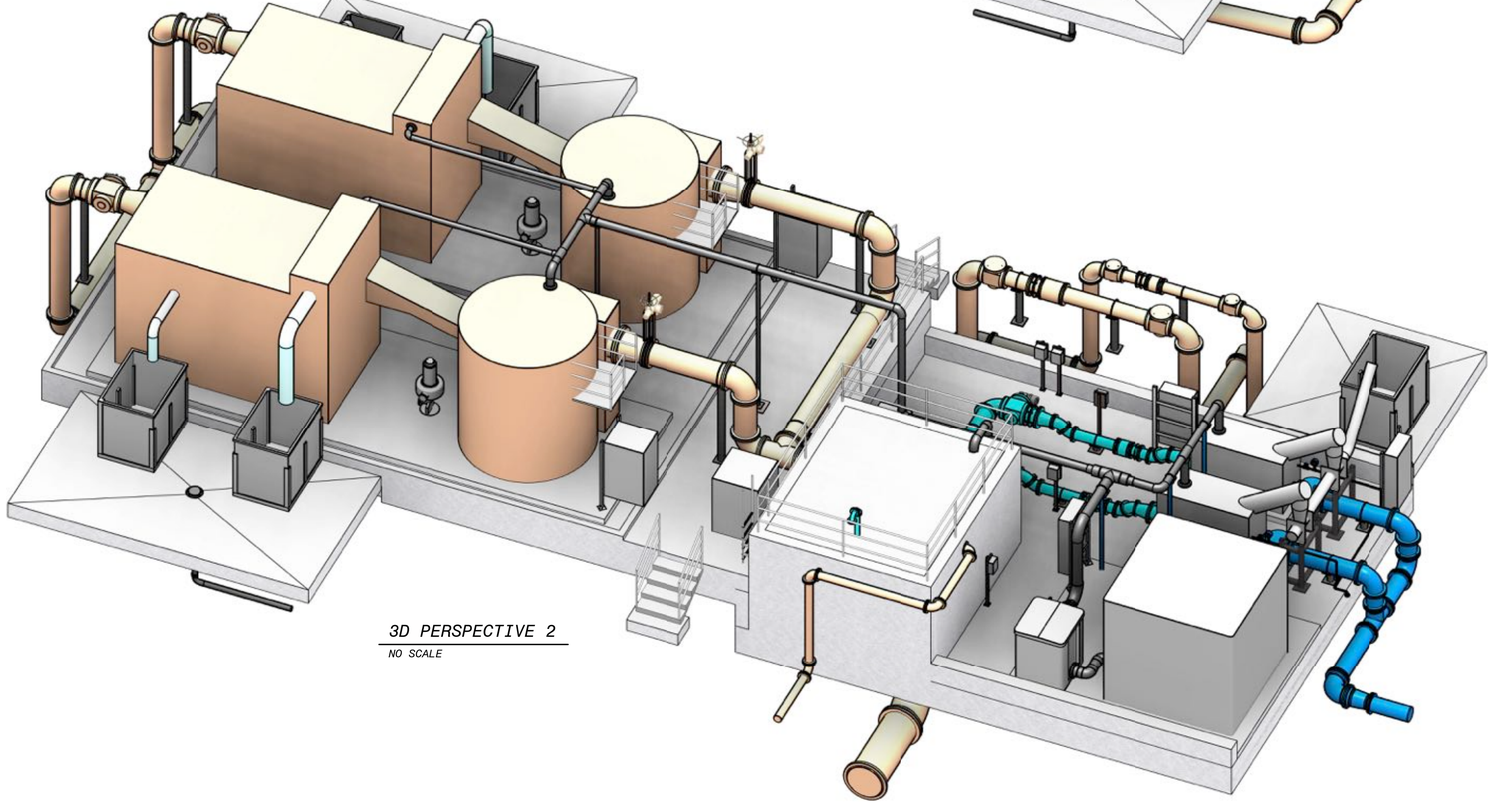

3D PERSPECTIVE 2
NO SCALE

90% SUBMITTAL- NOT FOR CONSTRUCTION

NO.	BY	CHK	APP	DATE	REVISIONS AND RECORD OF USE
C	KEZ	RWF	EVB	3/31/2020	90% SUBMITTAL
B	TDE	RT	EVB	7/30/2019	60% SUBMITTAL
A	TDE	RWF	EVB	3/5/2019	30% SUBMITTAL

REGISTERED PROFESSIONAL ENGINEER
ERICK V. BEVINGTON
No. C 78836
CIVIL
STATE OF CALIFORNIA

BLACK & VEATCH

JOINT VENTURE

BLACK & VEATCH

FILANC

CITY OF MORRO BAY
MORRO BAY WATER
RECLAMATION FACILITY (WRF)

HEADWORKS AREA - OVERALL
CIVIL-MECHANICAL
3D VIEWS

DESIGNED: TDE
DETAILED: MAK
CHECKED:
APPROVED:
DATE:

0 1/2 1
IF THIS BAR DOES NOT MEASURE 1" THEN DRAWING IS NOT TO FULL SCALE

PROJECT NO.
400530

20-M-001
SHEET
OF

PLOTTED: 3/24/2020 1:33:09 PM
D400530

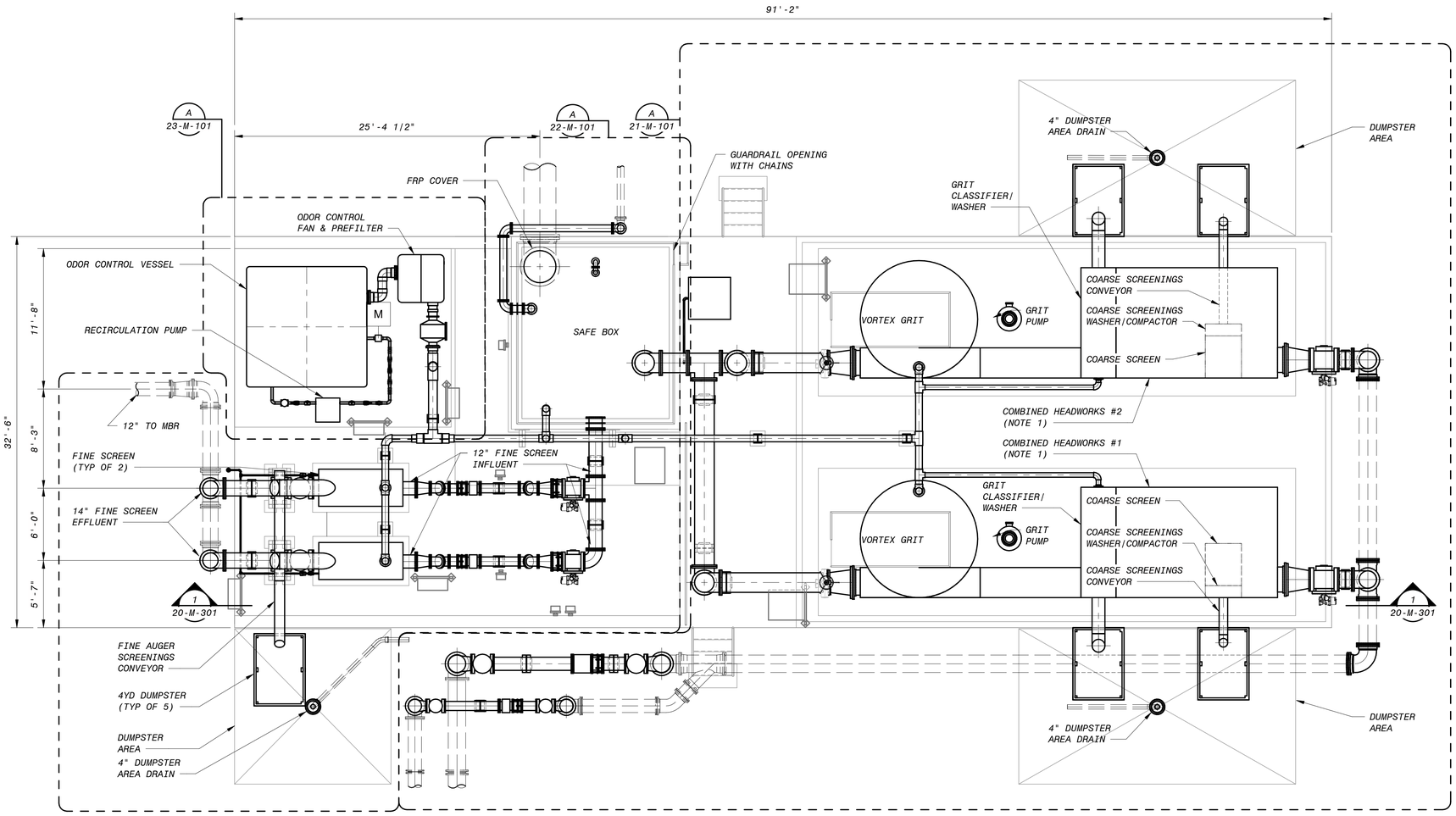

HEADWORKS AREA - OVERALL - OPERATING LEVEL PLAN

3/16" = 1'-0"

NOTES:

1. PACKAGE HEADWORKS LAYOUT IS VENDOR SPECIFIC. THIS LAYOUT WILL BY ADJUSTED WHEN HEADWORKS PACKAGE IS PROCURED.

NO.	BY	CHK	APP	DATE	REVISIONS AND RECORD OF USE
C	KEZ	RWF	EVB	3/31/2020	90% SUBMITTAL
B	TDE	RT	EVB	7/30/2019	60% SUBMITTAL
A	TDE	RWF	EVB	3/5/2019	30% SUBMITTAL

REGISTERED PROFESSIONAL ENGINEER
ERICK V. BEVINGTON
No. C 78836
STATE OF CALIFORNIA - CIVIL

BLACK & VEATCH

JOINT VENTURE

BLACK & VEATCH

FILANC

CITY OF MORRO BAY
MORRO BAY WATER
RECLAMATION FACILITY (WRF)

HEADWORKS AREA - OVERALL
CIVIL-MECHANICAL
OPERATING LEVEL PLAN

DESIGNED: TDE
DETAILED: MAK
CHECKED:
APPROVED:
DATE:

0 1/2 1
IF THIS BAR DOES NOT MEASURE 1" THEN DRAWING IS NOT TO FULL SCALE

PROJECT NO.
400530

20-M-101
SHEET
OF

6" 4' 2' 0' 5' 10'
3/16" = 1'-0"

90% SUBMITTAL - NOT FOR CONSTRUCTION

PLOTTED: 3/24/2020 1:33:14 PM
D400530

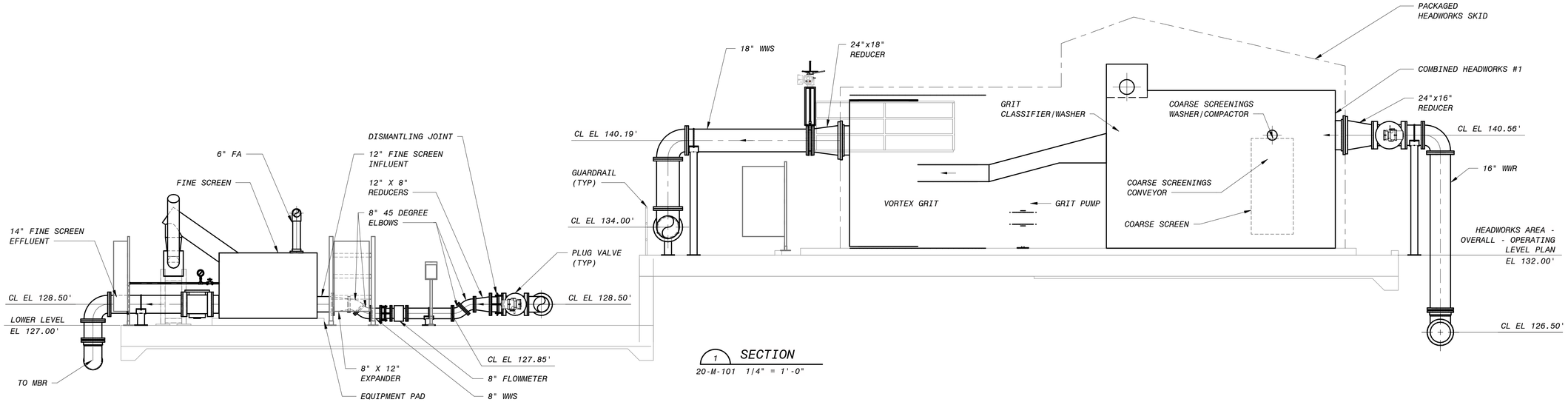

1 SECTION
20-M-101 1/4" = 1'-0"

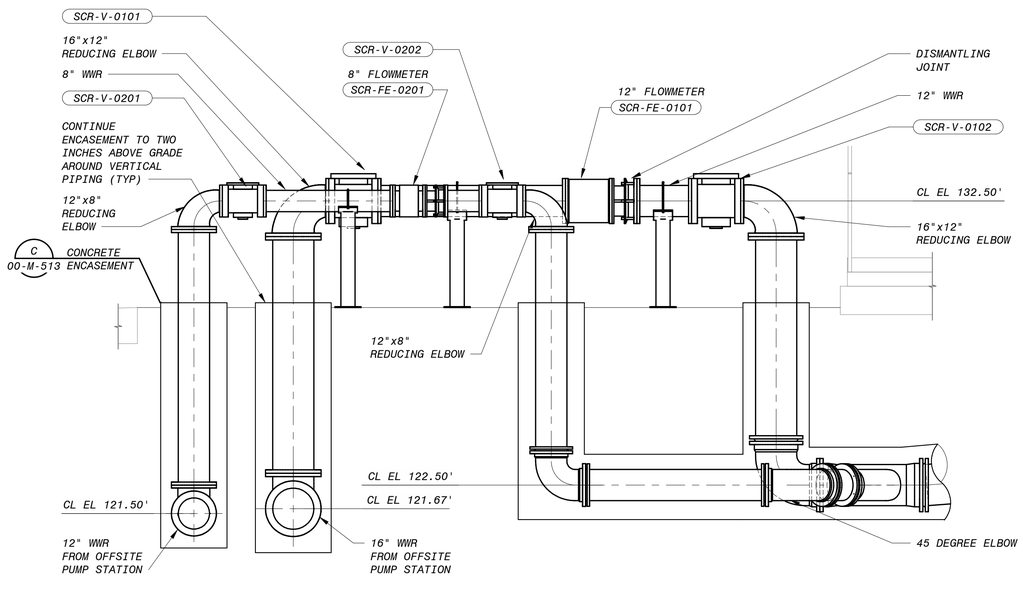

2 SECTION
21-M-101 3/8" = 1'-0"

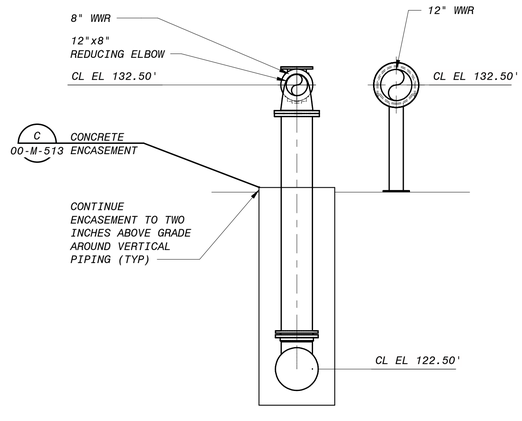

3 SECTION
21-M-101 3/8" = 1'-0"

4' 2' 0' 4' 8'
1/4" = 1'-0"

12" 0' 1' 2' 3' 4' 5' 6' 7'
3/8" = 1'-0"

90% SUBMITTAL- NOT FOR CONSTRUCTION

NO.	BY	CHK	APP	DATE	REVISIONS AND RECORD OF USE
C	KEZ	RWF	EVB	3/31/2020	90% SUBMITTAL
B	TDE	RT	EVB	7/30/2019	60% SUBMITTAL
A	TDE	RWF	EVB	3/5/2019	30% SUBMITTAL

REGISTERED PROFESSIONAL ENGINEER
ERICK V. BEVINGTON
No. C 78836
CIVIL
STATE OF CALIFORNIA

BLACK & VEATCH
JOINT VENTURE
BLACK & VEATCH
FILANC

CITY OF MORRO BAY
MORRO BAY WATER RECLAMATION FACILITY (WRF)

HEADWORKS AREA - OVERALL
CIVIL-MECHANICAL
SECTIONS

DESIGNED: TDE
DETAILED: MAK
CHECKED:
APPROVED:
DATE:

0 1/2 1
IF THIS BAR DOES NOT MEASURE 1" THEN DRAWING IS NOT TO FULL SCALE

PROJECT NO.
400530

20-M-301
SHEET
OF

PLOTTED: 3/24/2020 1:33:17 PM
D400530

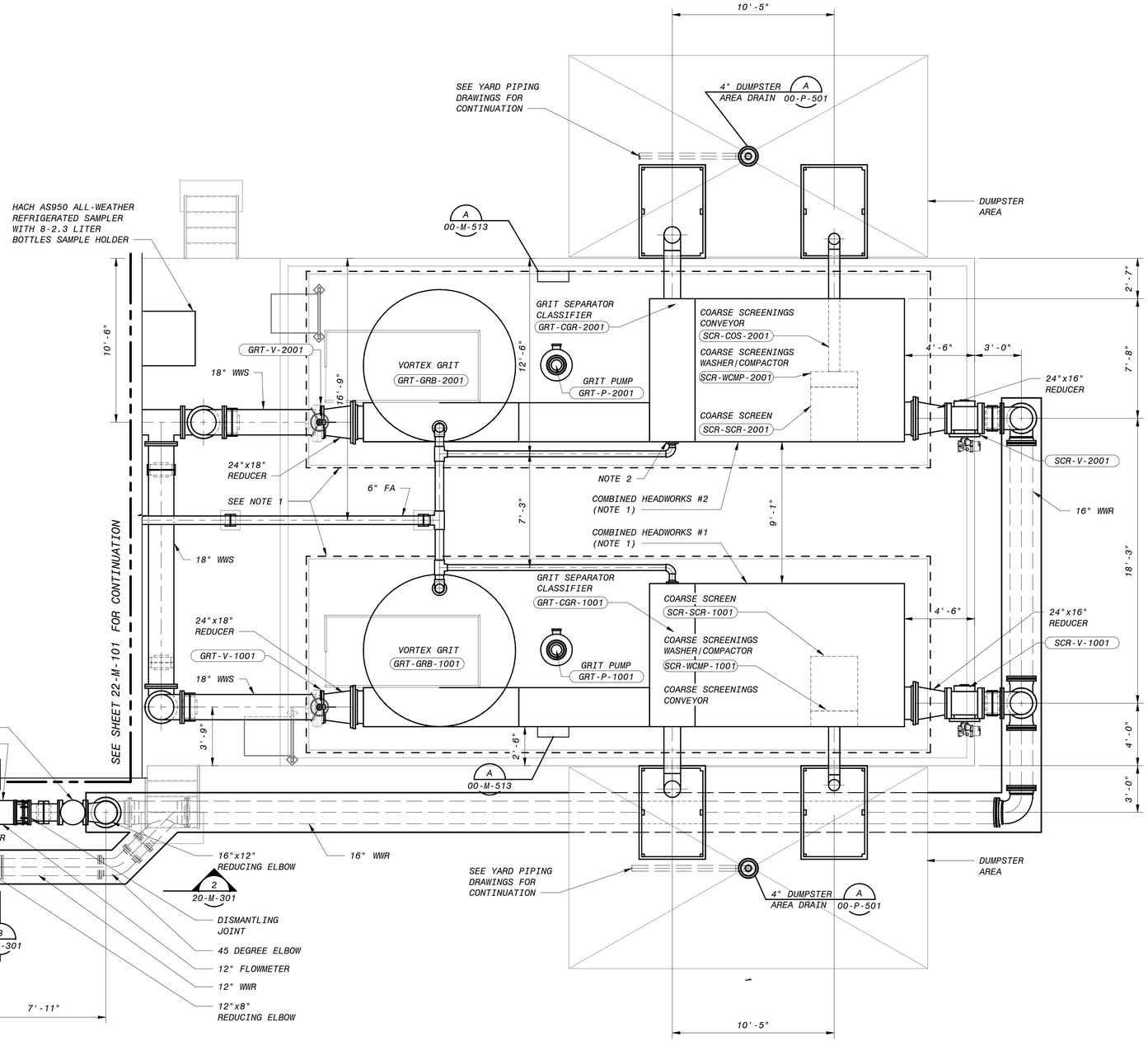

A HEADWORKS AREA - HEADWORKS - PLAN
20-M-101 1/4" = 1'-0"

4' 2' 0' 4' 8'
1/4" = 1'-0"

90% SUBMITTAL - NOT FOR CONSTRUCTION

NOTES:

1. THE BOUNDARY SHOWN FOR PACKAGED HEADWORKS SYSTEMS REPRESENTS THE AVAILABLE SPACE FOR THE PACKAGED HEADWORKS SYSTEMS SUPPLIER TO PROVIDE THEIR SYSTEMS THAT MEET THE SPECIFICATION REQUIREMENTS. THE SYSTEM SHOWN ON THE DRAWINGS WILL BE ADJUSTED TO MATCH THE SELECTED PACKAGED HEADWORKS SYSTEM SUPPLIER'S PROPOSED DESIGN.
2. ODOR CONTROL FLANGED CONNECTION POINTS TO BE DETERMINED WITH SHOP DRAWING SUBMITTALS FROM HEADWORKS SYSTEM SUPPLIER.

NO.	BY	CHK	APP	DATE	REVISIONS AND RECORD OF USE
B	KEZ	RWF	EVB	3/31/2020	90% SUBMITTAL
A	TDE	RT	EVB	7/30/2019	60% SUBMITTAL

REGISTERED PROFESSIONAL ENGINEER
ERICK V. BEVINGTON
No. C 78836
CIVIL
STATE OF CALIFORNIA

BLACK & VEATCH
JOINT VENTURE
FILANC
BLACK & VEATCH

CITY OF MORRO BAY
MORRO BAY WATER RECLAMATION FACILITY (WRF)

HEADWORKS AREA - HEADWORKS
CIVIL-MECHANICAL
PLAN

DESIGNED: TDE
DETAILED: RMB
CHECKED:
APPROVED:
DATE:

0 1/2 1
IF THIS BAR DOES NOT MEASURE 1" THEN DRAWING IS NOT TO FULL SCALE

PROJECT NO.
400530

21-M-101
SHEET
OF

PLOTTED: 3/24/2020 1:33:20 PM
D400530

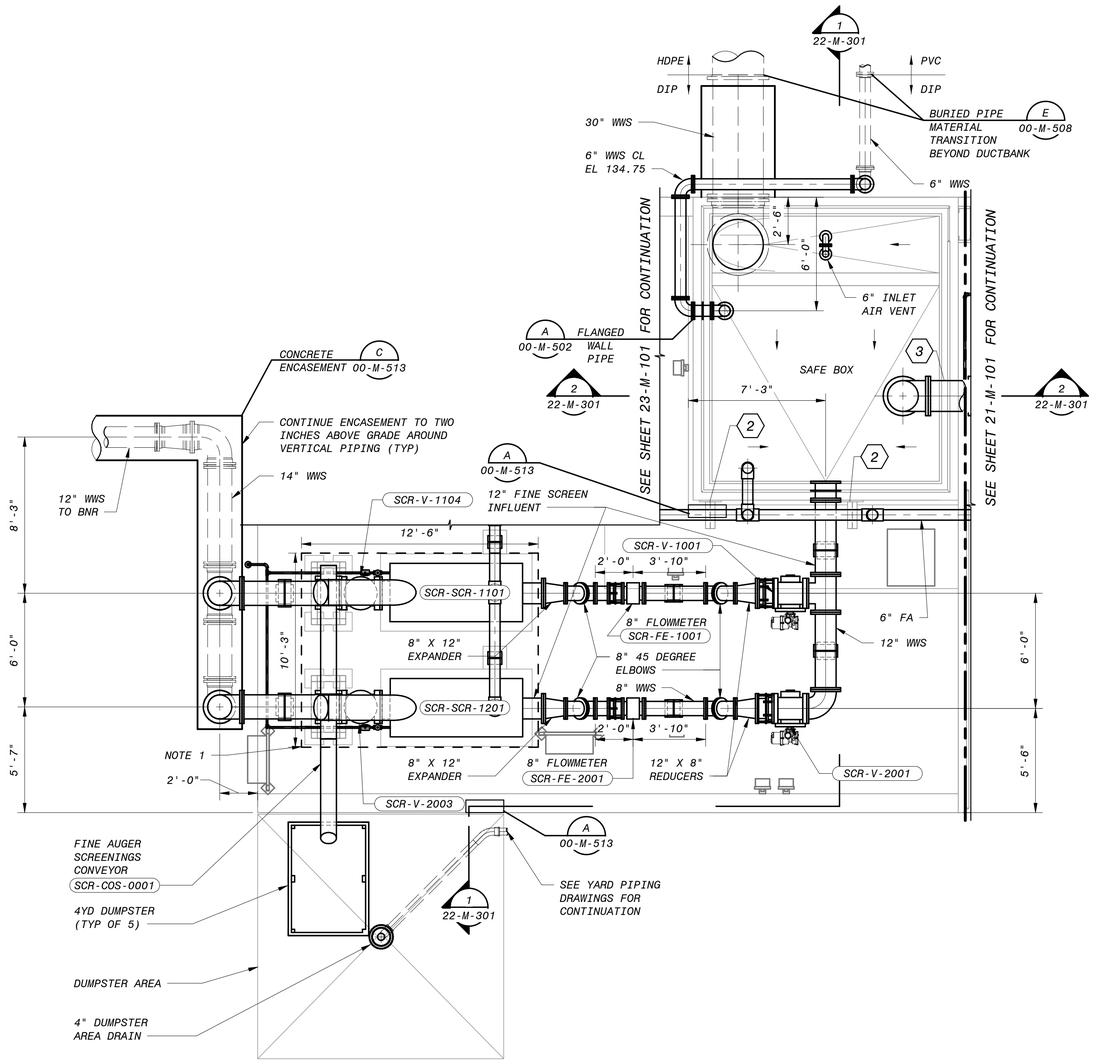

A HEADWORKS AREA - FINE SCREENS - PLAN
20-M-101 1/4" = 1'-0"

NOTES:

1. DIMENSIONS SHOWN INDICATE AVAILABLE SPACE FOR ALL FINE SCREEN EQUIPMENT.

KEY NOTES:

1. COLUMN PIPE SUPPORT. SEE DETAIL A ON 00-S-201
2. KNEE BRACE GUIDE SUPPORT. SEE DETAIL B ON 00-S-202
3. FLANGED WALL PIPE. SEE DETAIL B ON 00-M-502

NO.	BY	CHK	APP	DATE	REVISIONS AND RECORD OF USE
B	KEZ	RWF	EVB	3/31/2020	90% SUBMITTAL
A	TDE	RT	EVB	7/30/2019	60% SUBMITTAL

REGISTERED PROFESSIONAL ENGINEER
ERICK V. BEVINGTON
No. C 78836
STATE OF CALIFORNIA
CIVIL

BLACK & VEATCH
JOINT VENTURE
BLACK & VEATCH
FILANC

CITY OF MORRO BAY
MORRO BAY WATER RECLAMATION FACILITY (WRF)

HEADWORKS AREA - FINE SCREENS
CIVIL-MECHANICAL
PLAN

DESIGNED: TDE
DETAILED: RMB
CHECKED:
APPROVED:
DATE:

0 1/2 1
IF THIS BAR DOES NOT MEASURE 1" THEN DRAWING IS NOT TO FULL SCALE

PROJECT NO.
400530

22-M-101
SHEET
OF

4' 2' 0' 4' 8'
1/4" = 1'-0"

90% SUBMITTAL - NOT FOR CONSTRUCTION

PLOTTED: 3/24/2020 1:33:22 PM
D400530

NOTES:

1. ODOR CONTROL LAYOUT IS FOR REFERENCE ONLY. FINAL LAYOUT AND COMPONENTS WILL BE SHOWN AFTER EQUIPMENT IS PROCURED.
2. NOTE THAT THE FOUL AIR PIPING ROUTE IS FLEXIBLE AND DEPENDENT ON FINAL PROCUREMENT DESIGN OF THE ODOR CONTROL SYSTEM, FINAL SIZING OF THE FINE SCREENS, AND FINAL SIZING OF THE HEADWORKS PACKAGE.

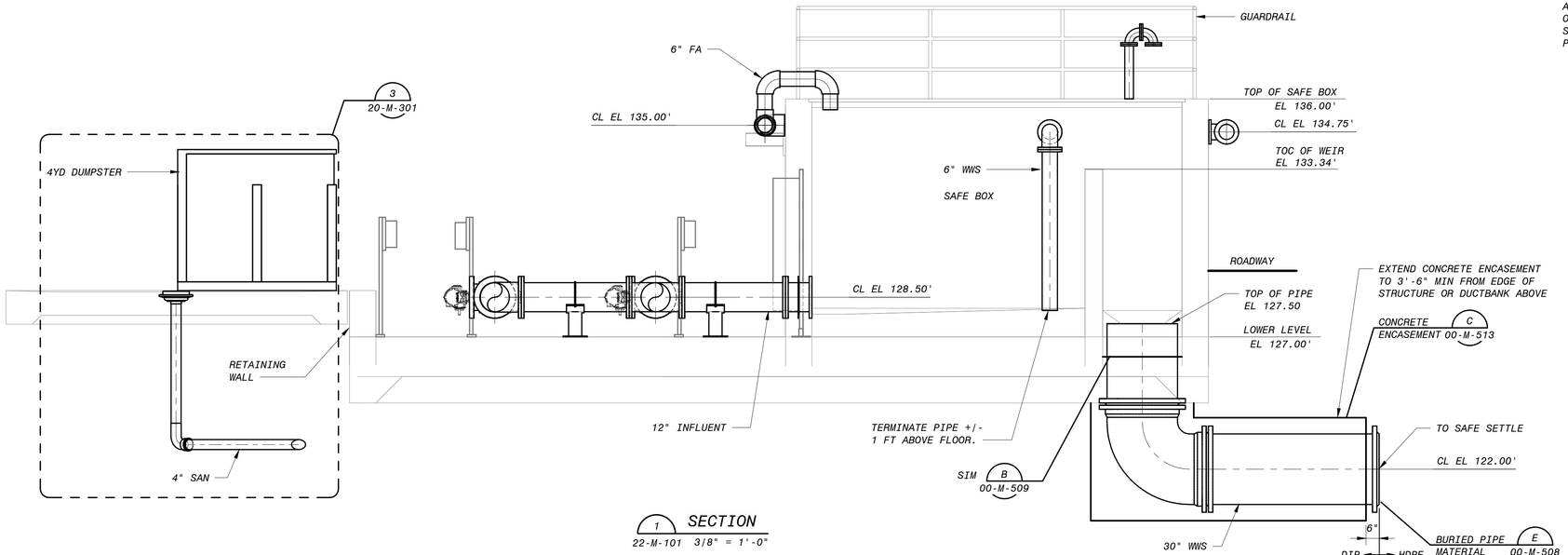

1 SECTION
22-M-101 3/8" = 1'-0"

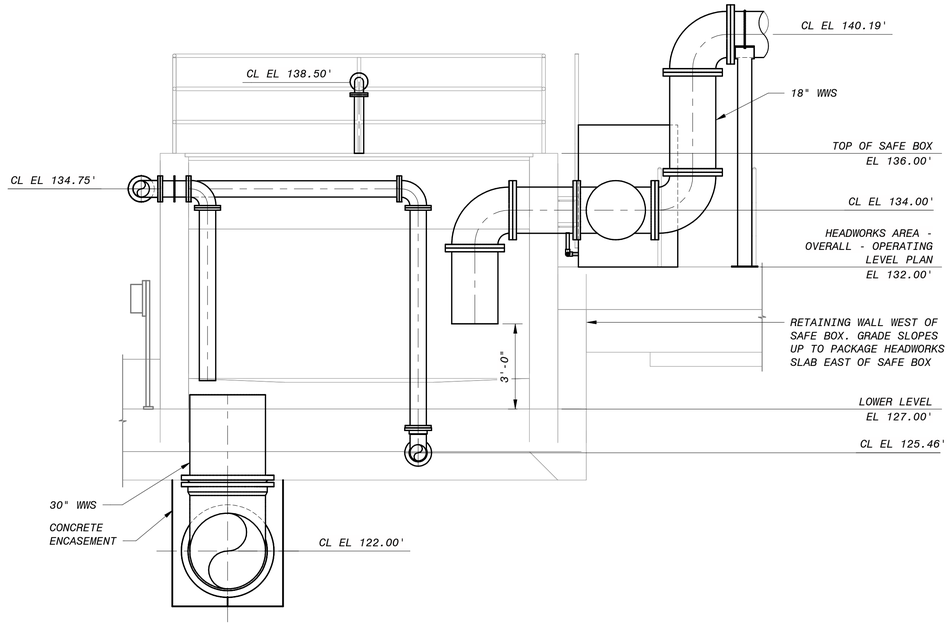

2 SECTION
22-M-101 3/8" = 1'-0"

12" 0' 1' 2' 3' 4' 5' 6' 7'
3/8" = 1'-0"

90% SUBMITTAL- NOT FOR CONSTRUCTION

NO.	BY	CHK	APP	DATE	REVISIONS AND RECORD OF USE
B	KEZ	RWF	EVB	3/31/2020	90% SUBMITTAL
A	TDE	RT	EVB	7/30/2019	60% SUBMITTAL

REGISTERED PROFESSIONAL ENGINEER
ERICK V. BEVINGTON
No. C 78836
CIVIL
STATE OF CALIFORNIA

BLACK & VEATCH
JOINT VENTURE
BLACK & VEATCH
FILANC

CITY OF MORRO BAY
MORRO BAY WATER
RECLAMATION FACILITY (WRF)

HEADWORKS AREA - FINE SCREENS
CIVIL-MECHANICAL
SECTIONS AND DETAILS 1

DESIGNED: TDE
DETAILED: RMB
CHECKED:
APPROVED:
DATE:

0 1/2 1
IF THIS BAR DOES NOT MEASURE 1" THEN DRAWING IS NOT TO FULL SCALE

PROJECT NO.
400530

22-M-301
SHEET
OF

PLOTTED: 3/24/2020 1:33:23 PM
D400530

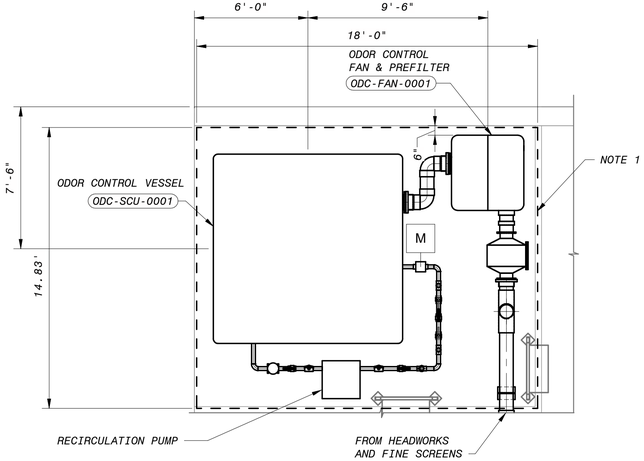

HEADWORKS AREA - ODOR CONTROL - PLAN

1/4" = 1'-0"

NOTES:

1. ODOR CONTROL LAYOUT IS FOR REFERENCE ONLY. FINAL LAYOUT AND COMPONENTS WILL BE SHOWN AFTER EQUIPMENT IS PROCURED.
2. DIMENSIONS SHOWN INDICATE AVAILABLE SPACE FOR ALL ODOR CONTROL EQUIPMENT, INCLUDING ELECTRICAL AND CONTROL PANELS.

4' 2' 0' 4' 8'

1/4" = 1'-0"

90% SUBMITTAL- NOT FOR CONSTRUCTION

NO.	BY	CHK	APP	DATE	REVISIONS AND RECORD OF USE
B	KEZ	RWF	EVB	3/31/2020	90% SUBMITTAL
A	TDE	RT	EVB	7/30/2019	60% SUBMITTAL

REGISTERED PROFESSIONAL ENGINEER
ERICK V. BEVINGTON
No. C 78836
CIVIL
STATE OF CALIFORNIA

BLACK & VEATCH

JOINT VENTURE

BLACK & VEATCH

FILANC

CITY OF MORRO BAY
MORRO BAY WATER
RECLAMATION FACILITY (WRF)

HEADWORKS AREA - ODOR CONTROL
CIVIL-MECHANICAL
PLAN, SECTIONS AND DETAILS

DESIGNED: TDE
DETAILED: RMB
CHECKED:
APPROVED:
DATE:

0 1/2 1
IF THIS BAR DOES NOT MEASURE 1" THEN DRAWING IS NOT TO FULL SCALE

PROJECT NO.
400530

23-M-101
SHEET
OF

PLOTTED: 3/24/2020 1:33:24 PM
D400530

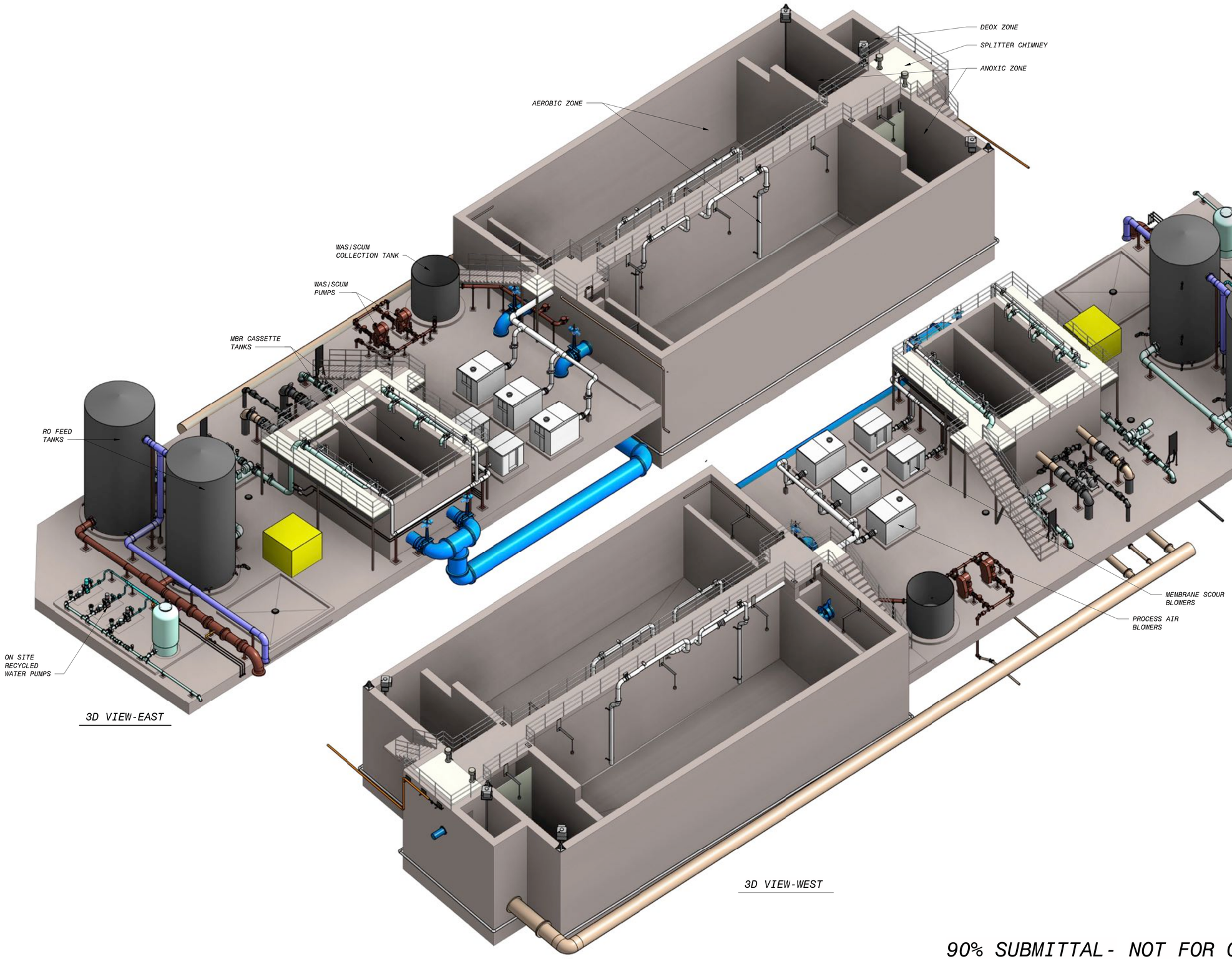

3D VIEW-EAST

3D VIEW-WEST

90% SUBMITTAL- NOT FOR CONSTRUCTION

NO.	BY	CHK	APP	DATE	REVISIONS AND RECORD OF USE
C	KEZ	RT	EVB	3/31/2020	90% SUBMITTAL
B	KEZ	RT	EVB	7/30/2019	60% SUBMITTAL
A	KEZ	RWF	EVB	3/5/2019	30% SUBMITTAL

REGISTERED PROFESSIONAL ENGINEER
ERICK V. BEVINGTON
No. C 78836
CIVIL
STATE OF CALIFORNIA

BLACK & VEATCH
JOINT VENTURE
BLACK & VEATCH
FILANC

CITY OF MORRO BAY
MORRO BAY WATER
RECLAMATION FACILITY (WRF)

TREATMENT AREA - OVERALL
CIVIL-MECHANICAL
3D VIEWS

DESIGNED: KEZ
DETAILED: MAK
CHECKED:
APPROVED:
DATE:

0 1/2 1
IF THIS BAR DOES NOT MEASURE 1" THEN DRAWING IS NOT TO FULL SCALE

PROJECT NO.
400530

30-M-001
SHEET
OF

PLOTTED: 3/31/2020 1:24:51 PM
D400530

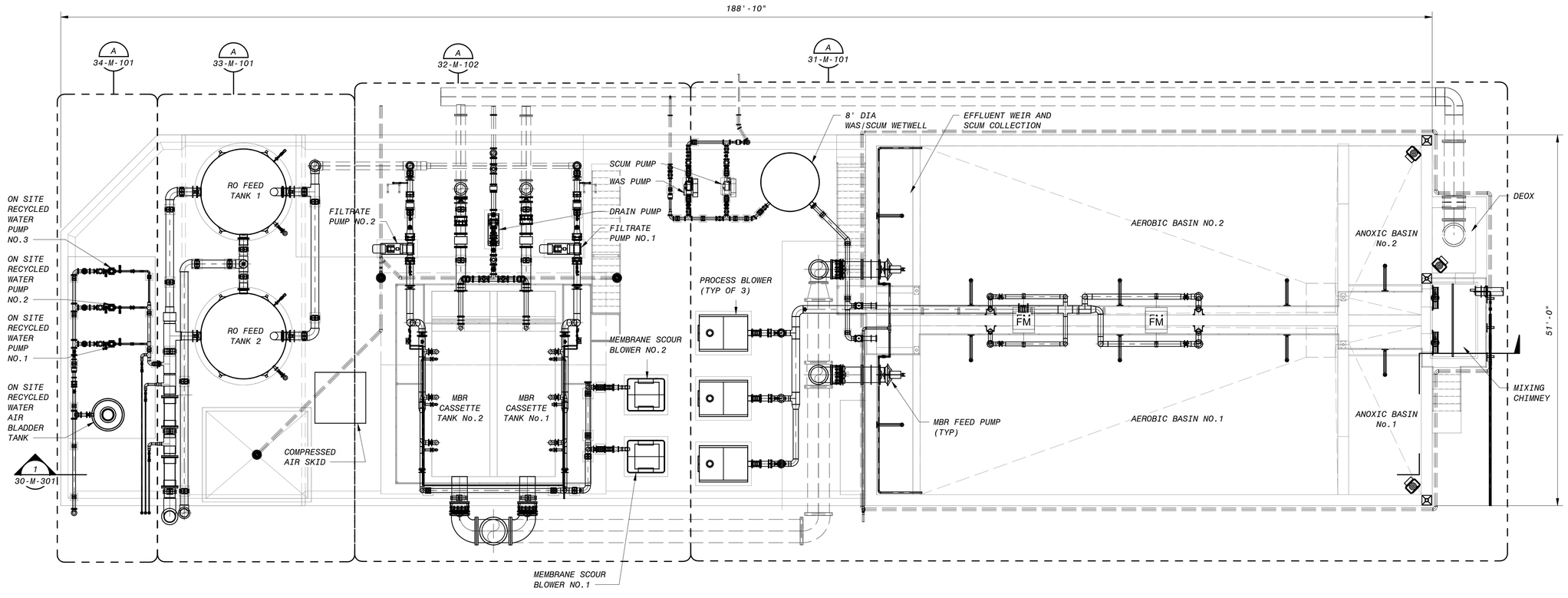

TREATMENT AREA - OVERALL - OPERATING LEVEL PLAN

1/8" = 1'-0"

8' 4' 0' 8' 16'

1/8" = 1'-0"

90% SUBMITTAL - NOT FOR CONSTRUCTION

NO.	BY	CHK	APP	DATE	REVISIONS AND RECORD OF USE
C	KEZ	RT	EVB	3/31/2020	90% SUBMITTAL
B	KEZ	RT	EVB	7/30/2019	60% SUBMITTAL
A	KEZ	RWF	EVB	3/5/2019	30% SUBMITTAL

REGISTERED PROFESSIONAL ENGINEER
ERICK V. BEVINGTON
No. C 78836
CIVIL
STATE OF CALIFORNIA

BLACK & VEATCH
JOINT VENTURE
BLACK & VEATCH
FILANC

CITY OF MORRO BAY
MORRO BAY WATER
RECLAMATION FACILITY (WRF)

TREATMENT AREA - OVERALL
CIVIL-MECHANICAL
OPERATING LEVEL PLAN

DESIGNED: KEZ
DETAILED: MAK
CHECKED:
APPROVED:
DATE:

0 1/2 1
IF THIS BAR DOES NOT MEASURE 1" THEN DRAWING IS NOT TO FULL SCALE

PROJECT NO.
400530

30-M-101
SHEET
OF

PLOTTED: 3/23/2020 1:30:32 PM
D400530

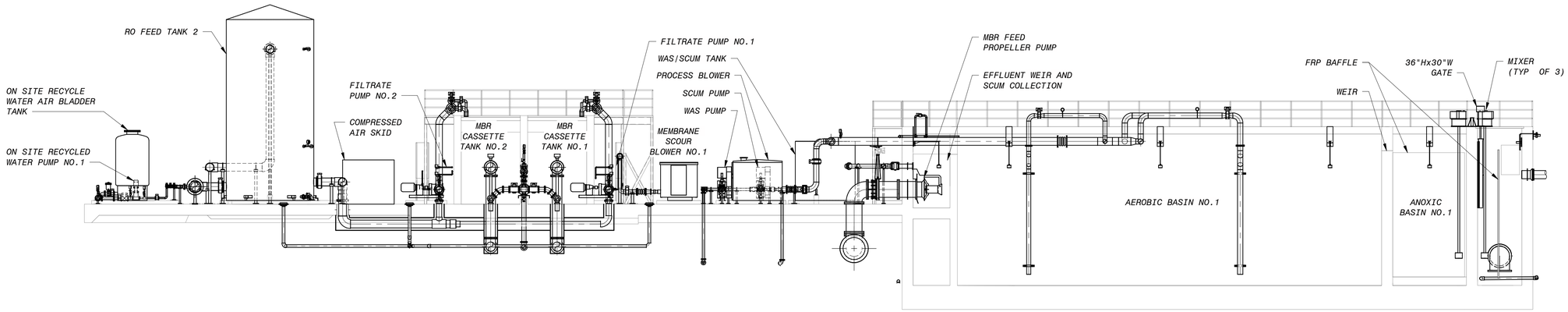

1 SECTION
30-M-101 1/8" = 1'-0"

8' 4' 0' 8' 16'
1/8" = 1'-0"

90% SUBMITTAL- NOT FOR CONSTRUCTION

NO.	BY	CHK	APP	DATE	REVISIONS AND RECORD OF USE
C	KEZ	RT	EVB	3/31/2020	90% SUBMITTAL
B	KEZ	RT	EVB	7/30/2019	60% SUBMITTAL
A	KEZ	RWF	EVB	3/5/2019	30% SUBMITTAL

REGISTERED PROFESSIONAL ENGINEER
ERICK V. BEVINGTON
No. C 78836
CIVIL
STATE OF CALIFORNIA

BLACK & VEATCH
JOINT VENTURE
BLACK & VEATCH
FILANC

CITY OF MORRO BAY
MORRO BAY WATER
RECLAMATION FACILITY (WRF)

TREATMENT AREA - OVERALL
CIVIL-MECHANICAL
SECTION

DESIGNED: KEZ
DETAILED: MAK
CHECKED:
APPROVED:
DATE:

0 1/2 1
IF THIS BAR DOES NOT MEASURE 1" THEN DRAWING IS NOT TO FULL SCALE

PROJECT NO.
400530

30-M-301
SHEET
OF

PLOTTED: 3/24/2020 8:42:26 AM
D400530

KEY NOTES:

1. ELBOW SUPPORT. SEE DETAIL A ON 00-S-203
2. COLUMN GUIDE SUPPORT. SEE DETAIL A ON 00-S-202
3. FLANGED WALL ANCHOR. SEE DETAIL B ON 00-M-502
4. WELDED TEE
5. BASIN STANCHION GUIDE SUPPORT. SEE DETAIL C ON 00-S-202
6. MODUALR CASING SEAL BEAM SLEEVE. SEE DETAIL C ON 00-M-506
7. KNEE BRACE GUIDE SUPPORT. SEE DETAIL B ON 00-S-202
8. KNEE BRACE AXIAL STOP SUPPORT. SEE DETAIL D ON 00-S-202

NOTES:

1. SPRAY BARS: 10 GPM PER TRAIN. SPEC FULLJET GG NOZZLES 1/8" INLET 3.5 OR 5 GPM CAPACITY. CAN DO 316 SS OR PVC.
2. SEE 31-M-102 FOR CONTINUATION.

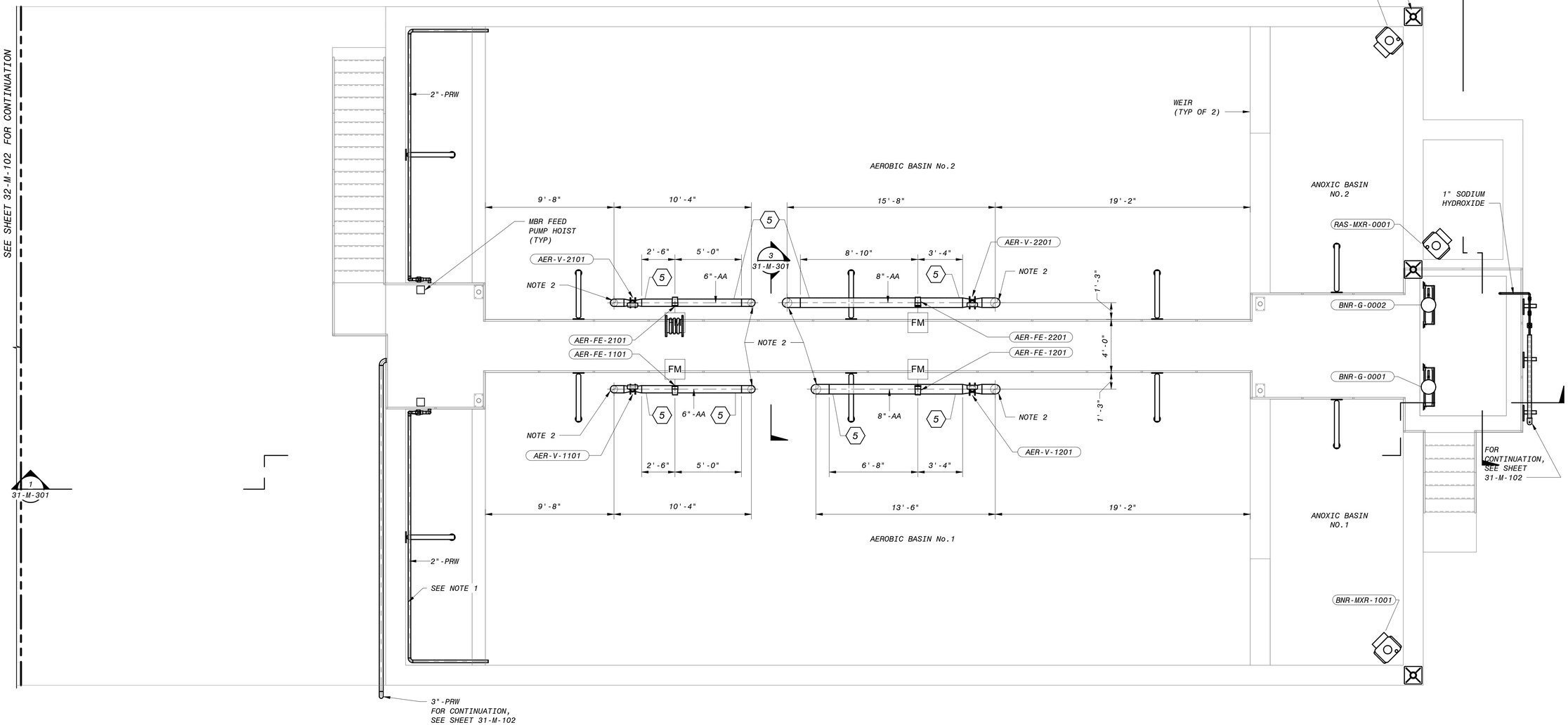

A BNR BASINS - UPPER LEVEL PLAN
30-M-101 1/4" = 1'-0"

4' 2' 0' 4' 8'
1/4" = 1'-0"

90% SUBMITTAL - NOT FOR CONSTRUCTION

NO.	BY	CHK	APP	DATE	REVISIONS AND RECORD OF USE
C	KEZ	RT	EVB	90% SUBMITTAL	
B	KEZ	RT	EVB	60% SUBMITTAL	
A	KEZ	RWF	EVB	30% SUBMITTAL	

REGISTERED PROFESSIONAL ENGINEER
ERICK V. BEVINGTON
No. C 78836
CIVIL
STATE OF CALIFORNIA

BLACK & VEATCH
JOINT VENTURE
BLACK & VEATCH
FILANC

CITY OF MORRO BAY
MORRO BAY WATER RECLAMATION FACILITY (WRF)

TREATMENT AREA - BNR BASINS
CIVIL-MECHANICAL
UPPER LEVEL PLAN

DESIGNED: KEZ
DETAILED: MAK
CHECKED:
APPROVED:
DATE:

0 1/2 1
IF THIS BAR DOES NOT MEASURE 1" THEN DRAWING IS NOT TO FULL SCALE

PROJECT NO.
400530

31-M-101
SHEET
OF

PLOTTED: 3/23/2020 1:46:48 PM
D400530

SEE SHEET 32-M-102 FOR CONTINUATION

KEY NOTES:

1. BASIN STANCHION GUIDE SUPPORT. SEE DETAIL C ON 00-S-202
2. KNEE BRACE GUIDE SUPPORT. SEE DETAIL B ON 0-S-202
3. MODULAR CASING SEAL BEAM SLEEVE. SEE DETAIL C ON 00-M-506
4. KNEE BRACE AXIAL STOP SUPPORT. SEE DETAIL D ON 00-S-202
5. ELBOW SUPPORT. SEE DETAIL A ON 00-S-203
6. COLUMN GUIDE SUPPORT. SEE DETAIL A ON 00-S-202
7. FLANGED WALL ANCHOR. SEE DETAIL B ON 00-M-502

NOTES:

1. SPRAY BARS: 10 GPM PER TRAIN. SPEC FULLJET GG NOZZLES 1/8" INLET 3.5 OR 5 GPM CAPACITY. CAN DO 316 SS OR PVC.
2. SEE 31-M-101 FOR CONTINUATION.
3. SEE 31-M-103 FOR CONTINUATION.
4. THERE SHALL BE A MINIMUM OF 3.5' OF CLEAR SPACE AROUND EACH CONTROL PANEL.

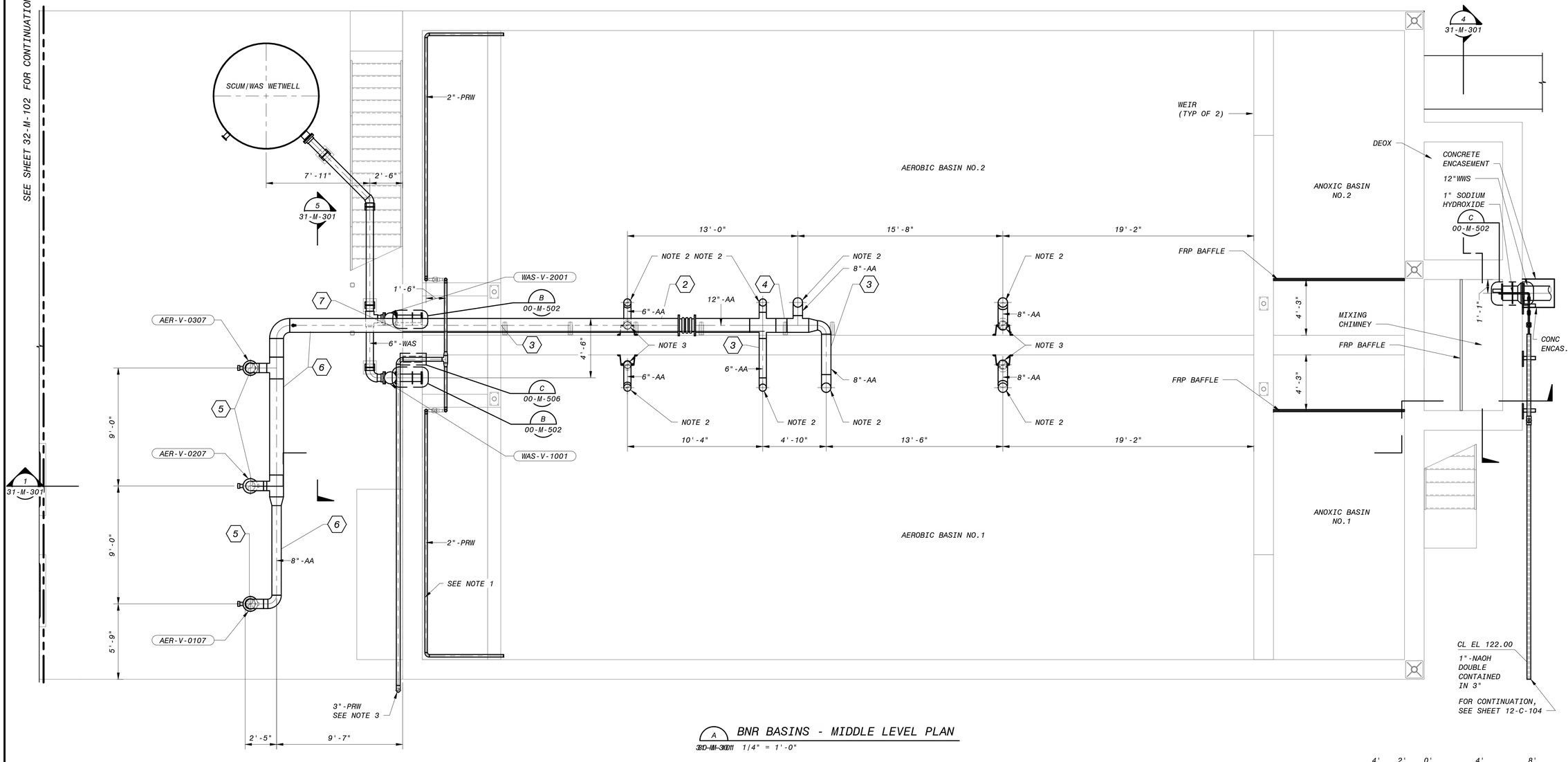

A BNR BASINS - MIDDLE LEVEL PLAN
1/4" = 1'-0"

4' 2' 0' 4' 8'
1/4" = 1'-0"

90% SUBMITTAL- NOT FOR CONSTRUCTION

NO.	BY	CHK	APP	DATE	REVISIONS AND RECORD OF USE
C	KEZ	RT	EVB	3/31/2020	90% SUBMITTAL
B	KEZ	RT	EVB	7/30/2019	60% SUBMITTAL
A	KEZ	RWF	EVB	3/5/2019	30% SUBMITTAL

REGISTERED PROFESSIONAL ENGINEER
ERICK V. BEVINGTON
No. C 78836
CIVIL
STATE OF CALIFORNIA

BLACK & VEATCH
JOINT VENTURE
BLACK & VEATCH
FILANC

CITY OF MORRO BAY
MORRO BAY WATER
RECLAMATION FACILITY (WRF)

TREATMENT AREA - BNR BASINS
CIVIL-MECHANICAL
MIDDLE LEVEL PLAN

DESIGNED: KEZ
DETAILED: MAK
CHECKED:
APPROVED:
DATE:

0 1/2 1
IF THIS BAR DOES NOT MEASURE 1" THEN DRAWING IS NOT TO FULL SCALE

PROJECT NO.
400530

31-M-102
SHEET
OF

PLOTTED: 3/23/2020 1:51:55 PM
D400530

KEY NOTES:

1. BASIN STANCHION GUIDE SUPPORT. SEE DETAIL C ON 00-S-202
2. KNEE BRACE GUIDE SUPPORT. SEE DETAIL B ON 0-S-202
3. MODUALR CASING SEAL BEAM SLEEVE. SEE DETAIL C ON 00-S-303
4. KNEE BRACE AXIAL STOP SUPPORT. SEE DETAIL D ON 00-S-302
5. ELBOW SUPPORT. SEE DETAIL A ON 00-S-203
6. COLUMN GUIDE SUPPORT. SEE DETAIL A ON 00-S-202
7. FLANGED WALL ANCHOR. SEE DETAIL B ON 00-M-502

NOTES:

1. SPRAY BARS: 10 GPM PER TRAIN. SPEC FULLJET GG NOZZLES 1/8" INLET 3.5 OR 5 GPM CAPACITY. CAN DO 316 SS OR PVC.
2. SEE 31-M-102 FOR CONTINUATION.

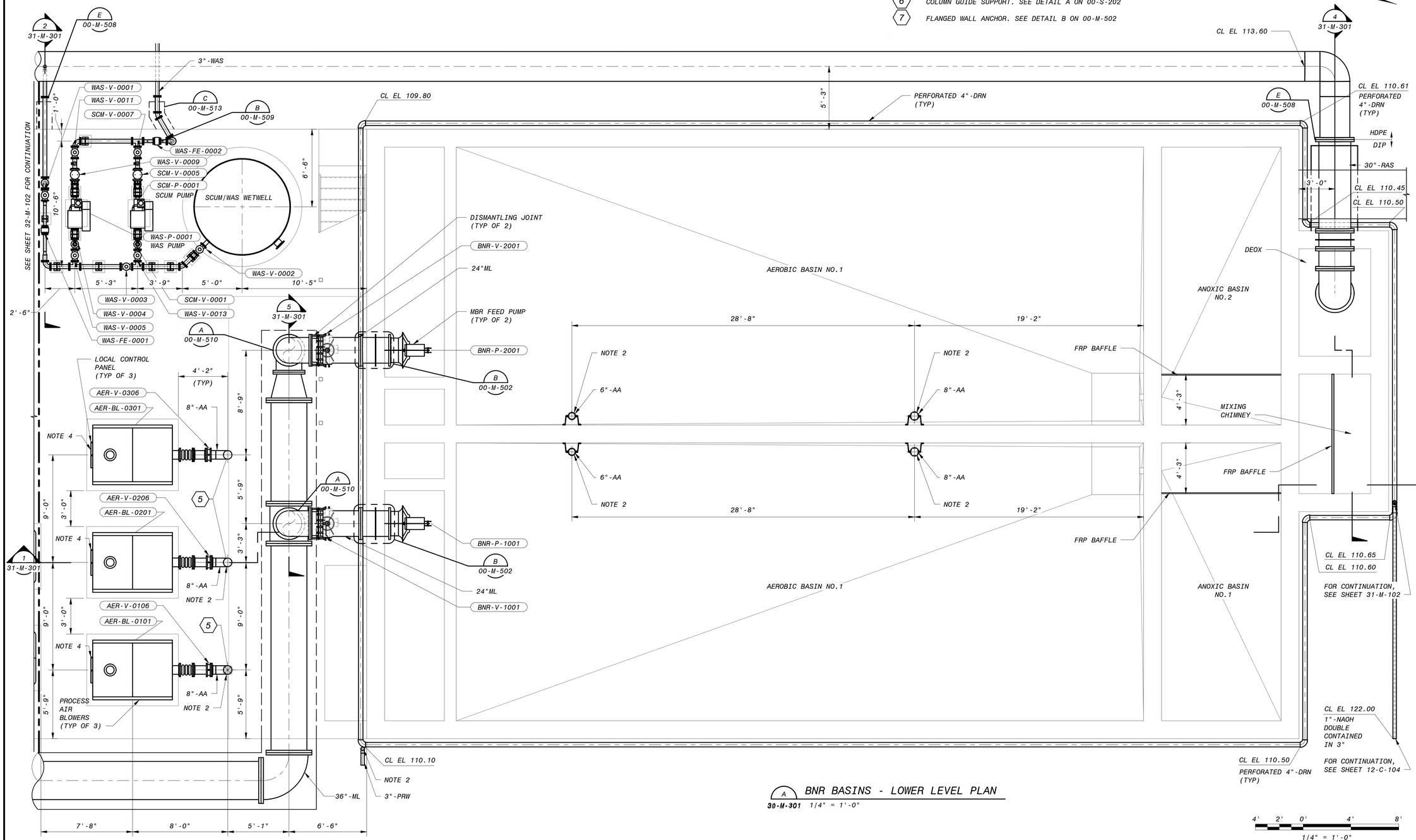

A 30-M-301 BNR BASINS - LOWER LEVEL PLAN 1/4" = 1'-0"

4' 2' 0' 4' 8'
1/4" = 1'-0"

90% SUBMITTAL - NOT FOR CONSTRUCTION

NO.	BY	CHK	APP	DATE	REVISIONS AND RECORD OF USE
A	KEZ	RWF	EVB	3/31/2020	90% SUBMITTAL

REGISTERED PROFESSIONAL ENGINEER
ERICK V. BEVINGTON
No. C 78836
CIVIL
STATE OF CALIFORNIA

BLACK & VEATCH
JOINT VENTURE
BLACK & VEATCH
FILANC

CITY OF MORRO BAY
MORRO BAY WATER RECLAMATION FACILITY (WRF)

TREATMENT AREA - BNR BASINS
CIVIL-MECHANICAL
LOWER LEVEL PLAN

DESIGNED: Designer
DETAILED: Author
CHECKED: Checker
APPROVED: Approver
DATE:

0 1/2 1
IF THIS BAR DOES NOT MEASURE 1" THEN DRAWING IS NOT TO FULL SCALE

PROJECT NO. 400530

31-M-103
SHEET
OF

PLOTTED: 3/23/2020 1:52:00 PM
D400530

KEY NOTES:

1. VERTICAL SUPPORT. SEE DETAIL E ON 00-S-202
2. DROP LEG PROVIDED TO FLANGE BY DESIGN-BUILDER.
3. DROP LEG AND DIFFUSER GRID PROVIDED BY PLANT DIFFUSER SYSTEM SUPPLIER.

NOTES:

1. AERATION SYSTEM SUPPLIER SHALL PROVIDE CONNECTION TO AERATION DROP LEG IN THE LOCATION SHOWN.

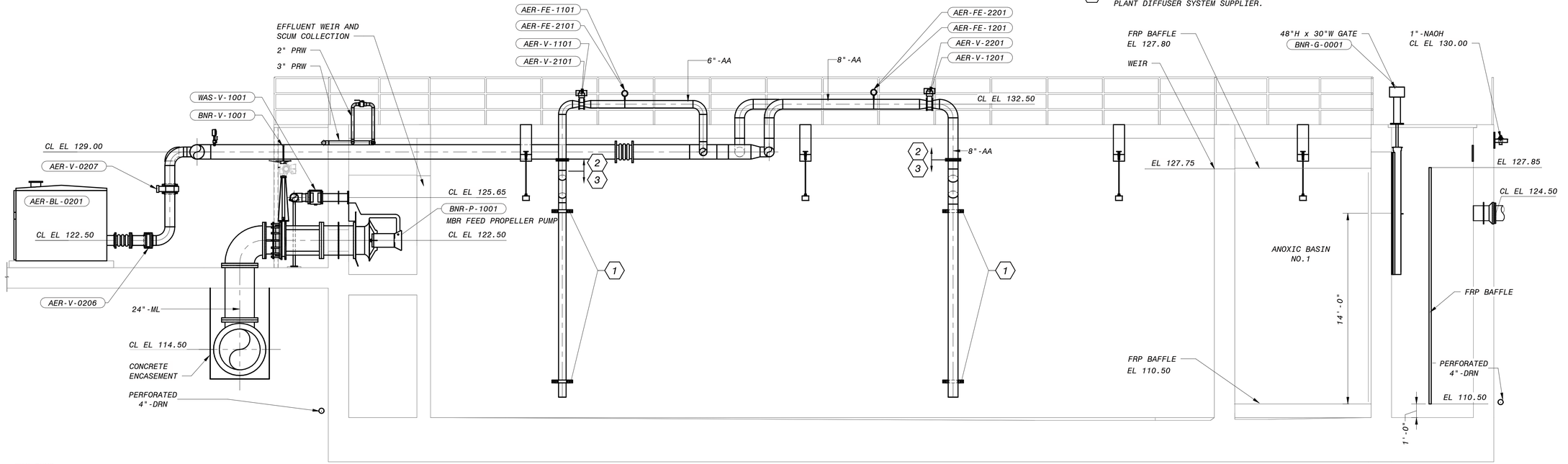

1 SECTION
31-M-101 1/4" = 1'-0"

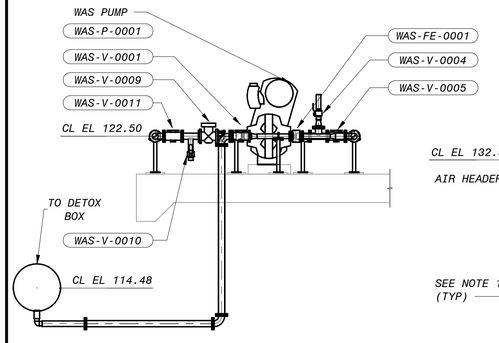

2 SECTION
31-M-103 1/4" = 1'-0"

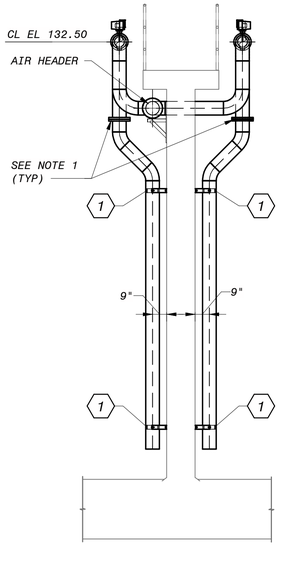

3 SECTION
31-M-101 1/4" = 1'-0"

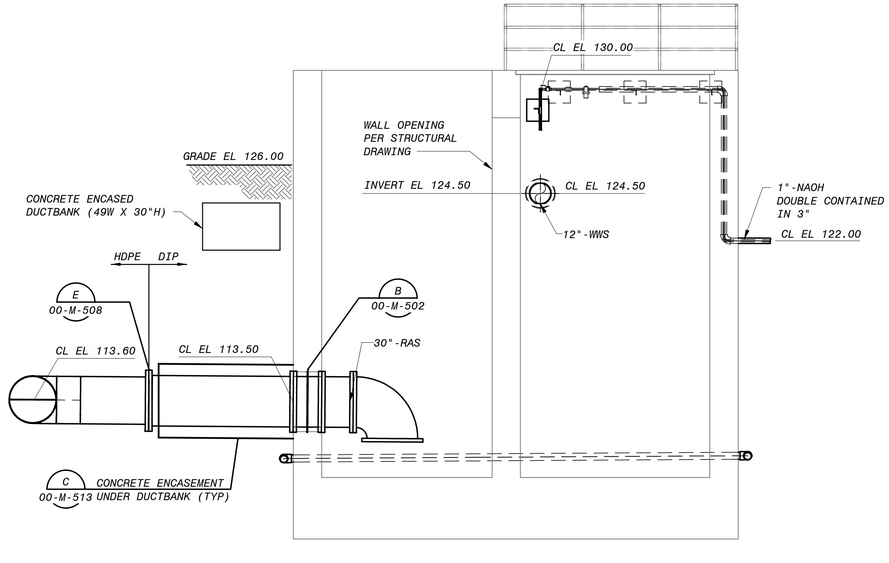

4 SECTION
31-M-101 1/4" = 1'-0"

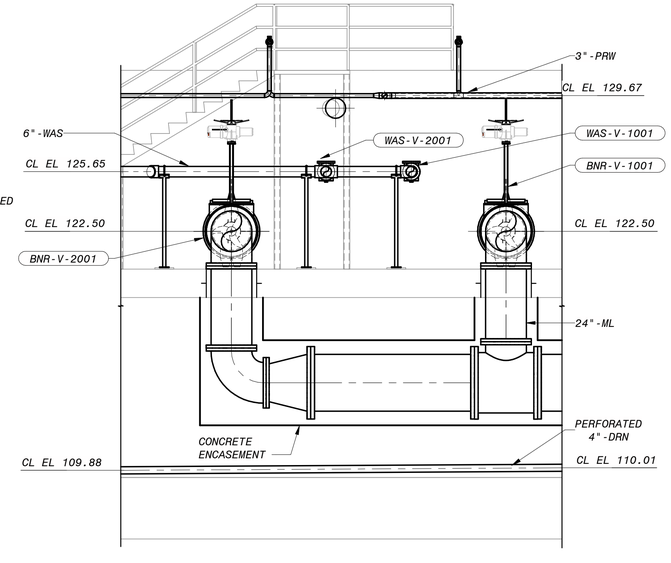

5 SECTION
31-M-102 1/4" = 1'-0"

4' 2' 0' 4' 8'
1/4" = 1'-0"

90% SUBMITTAL- NOT FOR CONSTRUCTION

NO.	BY	CHK	APP	DATE	REVISIONS AND RECORD OF USE
C	KEZ	RT	EVB	3/31/2020	90% SUBMITTAL
B	KEZ	RT	EVB	7/30/2019	60% SUBMITTAL
A	KEZ	RWF	EVB	3/5/2019	30% SUBMITTAL

REGISTERED PROFESSIONAL ENGINEER
ERICK V. BEVINGTON
No. C 78836
CIVIL
STATE OF CALIFORNIA

BLACK & VEATCH
JOINT VENTURE
BLACK & VEATCH
FILANC

CITY OF MORRO BAY
MORRO BAY WATER RECLAMATION FACILITY (WRF)

TREATMENT AREA - BNR BASINS
CIVIL-MECHANICAL
SECTION AND DETAILS 1

DESIGNED: KEZ
DETAILED: MAK
CHECKED:
APPROVED:
DATE:

0 1/2 1
IF THIS BAR DOES NOT MEASURE 1" THEN DRAWING IS NOT TO FULL SCALE

PROJECT NO. 400530

31-M-301
SHEET
OF

PLOTTED: 3/23/2020 1:52:06 PM
D400530

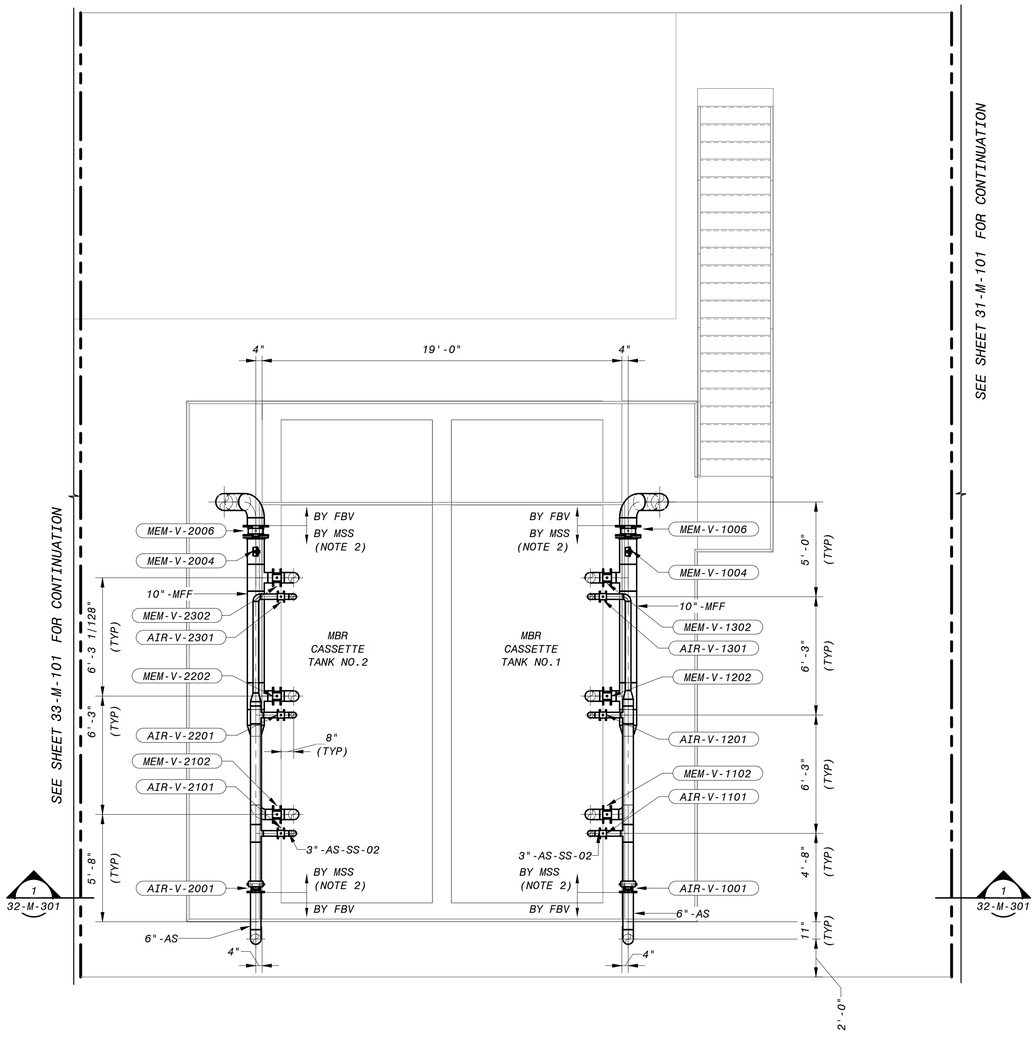

1 MBR SYSTEM - UPPER LEVEL PLAN
31-M-301 1/4" = 1'-0"

NOTES:

1. INFLUENT MANIFOLD AND PIPING PROVIDED BY MBR SYSTEM SUPPLIER.
2. FILTRATE PIPING AND AERATION HEADERS AND BRANCHES PROVIDED BY MBR SYSTEM SUPPLIER.

NO.	BY	CHK	APP	DATE	REVISIONS AND RECORD OF USE
C	KEZ	RT	EVB	3/31/2020	90% SUBMITTAL
B	KEZ	RT	EVB	7/30/2019	60% SUBMITTAL
A	KEZ	RWF	EVB	3/5/2019	30% SUBMITTAL

REGISTERED PROFESSIONAL ENGINEER
ERICK V. BEVINGTON
No. C 78836
CIVIL
STATE OF CALIFORNIA

BLACK & VEATCH
JOINT VENTURE
BLACK & VEATCH
FILANC

CITY OF MORRO BAY
MORRO BAY WATER
RECLAMATION FACILITY (WRF)

TREATMENT AREA - MBR SYSTEM
CIVIL-MECHANICAL
UPPER LEVEL PLAN

DESIGNED: KEZ
DETAILED: MAK
CHECKED:
APPROVED:
DATE:

0 1/2 1
IF THIS BAR DOES NOT MEASURE 1" THEN DRAWING IS NOT TO FULL SCALE

PROJECT NO.
400530

32-M-101
SHEET
OF

4' 2' 0' 4' 8'
1/4" = 1'-0"

90% SUBMITTAL - NOT FOR CONSTRUCTION

PLOTTED: 3/23/2020 1:52:08 PM
D400530

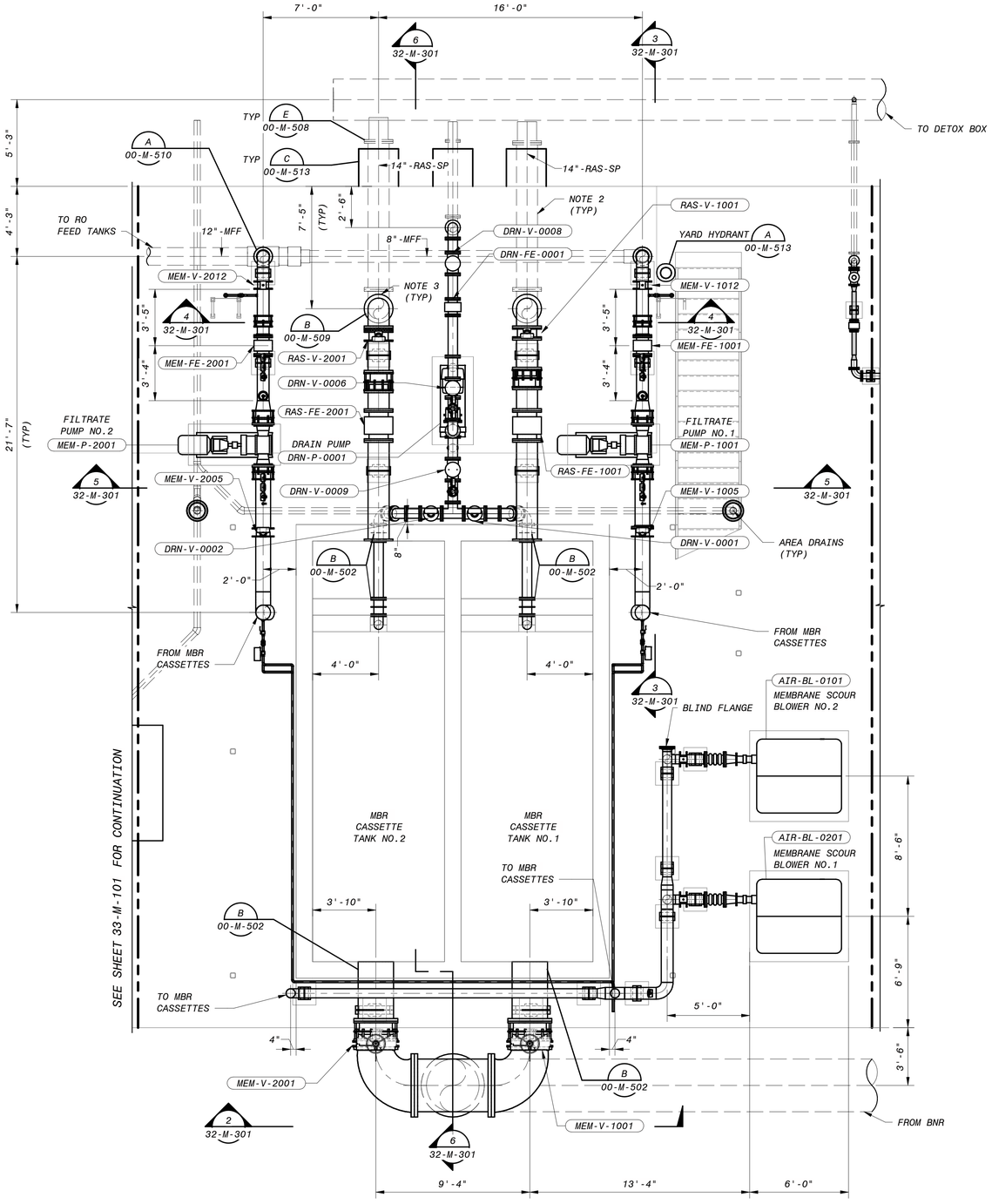

A MBR SYSTEM - LOWER LEVEL PLAN
30-M-101 1/4" = 1'-0"

NOTES:

1. VALVES, INSTRUMENTS AND FLOW METERS PROVIDED BY MBR SYSTEM SUPPLIER AS INDICATED ON P&ID DRAWINGS.
2. CONCRETE ENCASE UNDER SLAB PIPING.
3. PROVIDE INSLUATING KIT AT FIRST FLANGE ABOVE GRADE ON METALLIC PIPING.
4. PIPING AND AERATION CONNECTIONS PROVIDED BY MBR SYSTEM SUPPLIER.

NO.	BY	CHK	APP	DATE	REVISIONS AND RECORD OF USE
C	KEZ	RJT	EVB	3/31/2020	90% SUBMITTAL
B	KEZ	RJT	EVB	7/30/2019	60% SUBMITTAL
A	KEZ	RWF	EVB	3/5/2019	30% SUBMITTAL

REGISTERED PROFESSIONAL ENGINEER
ERICK V. BEVINGTON
No. C 78836
CIVIL
STATE OF CALIFORNIA

BLACK & VEATCH
JOINT VENTURE
BLACK & VEATCH
FILANC

CITY OF MORRO BAY
MORRO BAY WATER
RECLAMATION FACILITY (WRF)

TREATMENT AREA - MBR SYSTEM
CIVIL-MECHANICAL
LOWER LEVEL PLAN

DESIGNED: KEZ
DETAILED: MAK
CHECKED:
APPROVED:
DATE:

0 1/2 1
IF THIS BAR DOES NOT MEASURE 1" THEN DRAWING IS NOT TO FULL SCALE

PROJECT NO.
400530

32-M-102
SHEET
OF

4' 2' 0' 4' 8'
1/4" = 1'-0"

90% SUBMITTAL - NOT FOR CONSTRUCTION

PLOTTED: 3/23/2020 1:52:13 PM
D400530

NOTES:

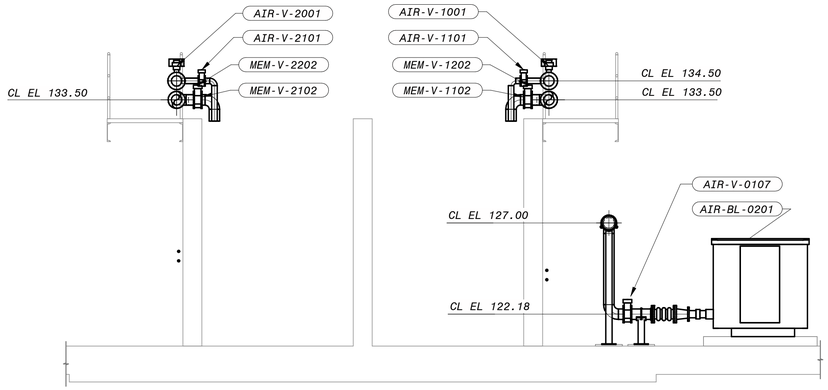

1 SECTION
32-M-101 1/4" = 1'-0"

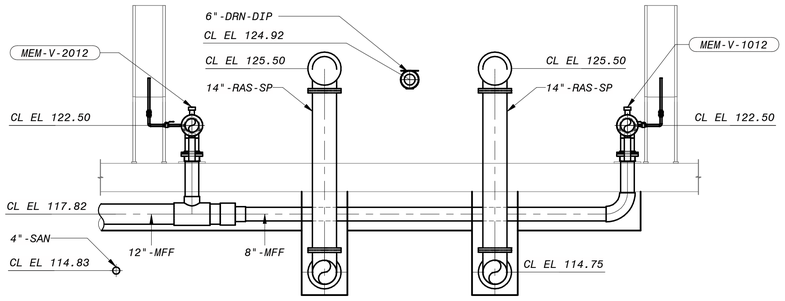

4 SECTION
32-M-102 1/4" = 1'-0"

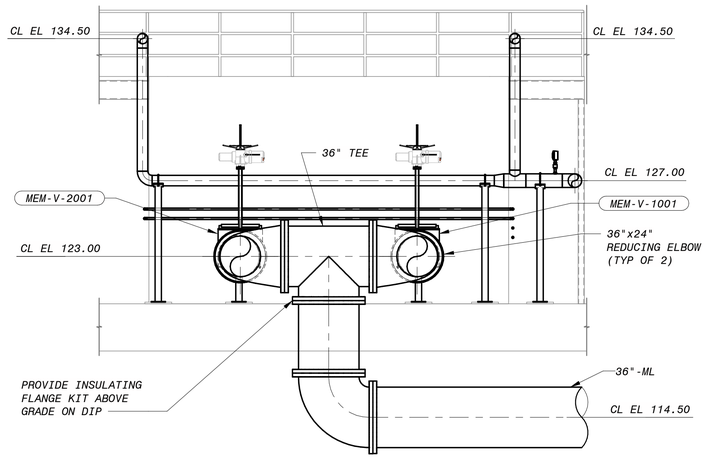

2 SECTION
32-M-102 1/4" = 1'-0"

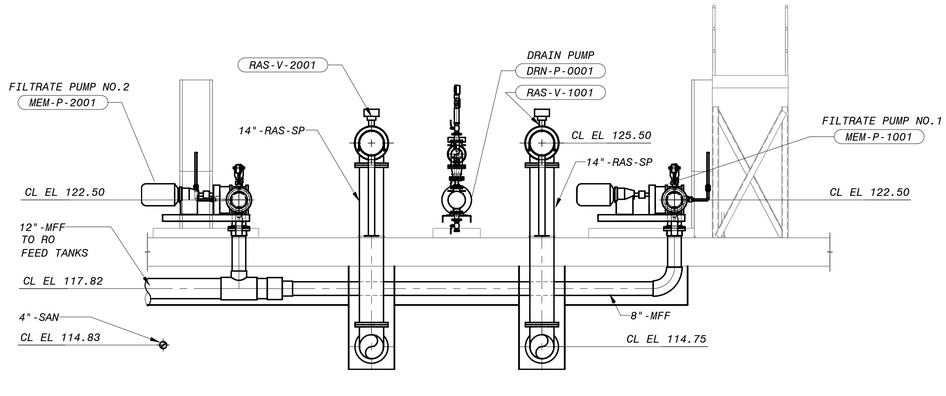

5 SECTION
32-M-102 1/4" = 1'-0"

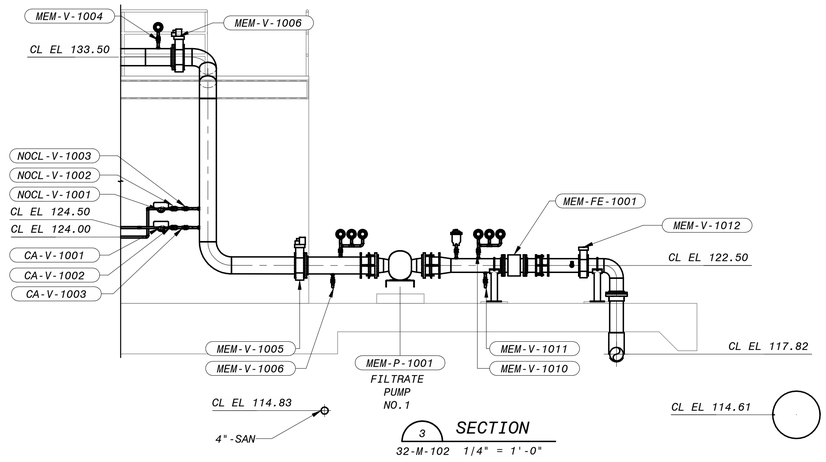

3 SECTION
32-M-102 1/4" = 1'-0"

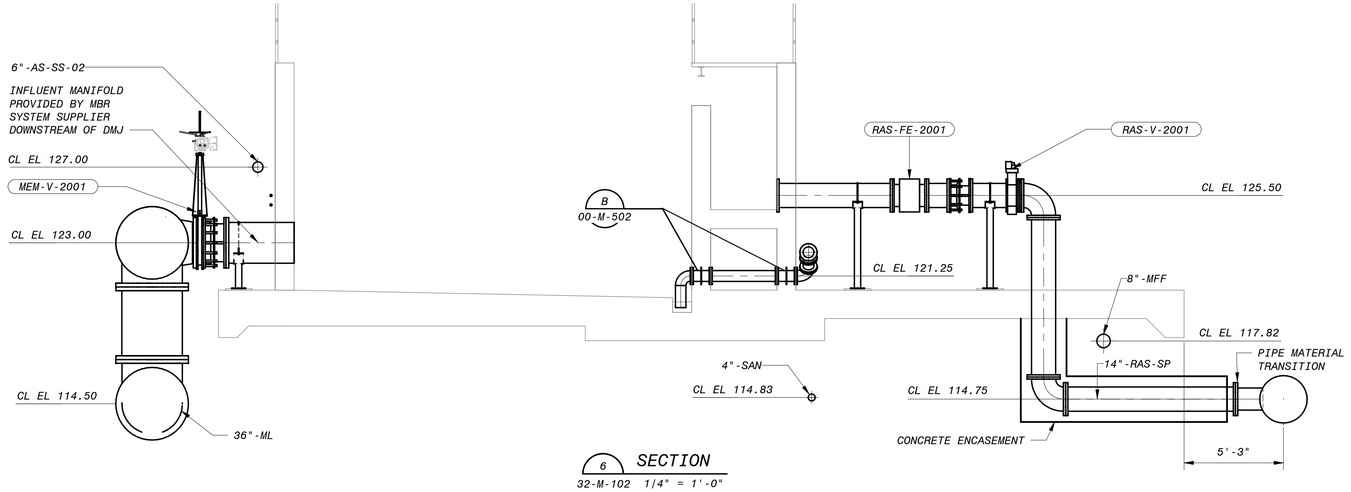

6 SECTION
32-M-102 1/4" = 1'-0"

4' 2' 0' 4' 8'
1/4" = 1'-0"

90% SUBMITTAL - NOT FOR CONSTRUCTION

NO.	BY	CHK	APP	DATE	REVISIONS AND RECORD OF USE
C	KEZ	RT	EVB	3/31/2020	90% SUBMITTAL
B	KEZ	RT	EVB	7/30/2019	60% SUBMITTAL
A	KEZ	RWF	EVB	3/5/2019	30% SUBMITTAL

REGISTERED PROFESSIONAL ENGINEER
ERICK V. BEVINGTON
No. C 78836
STATE OF CALIFORNIA
CIVIL

BLACK & VEATCH
JOINT VENTURE
BLACK & VEATCH
FILANC

CITY OF MORRO BAY
MORRO BAY WATER
RECLAMATION FACILITY (WRF)

TREATMENT AREA - MBR SYSTEM
CIVIL-MECHANICAL
SECTION

DESIGNED: KEZ
DETAILED: MAK
CHECKED:
APPROVED:
DATE:

0 1/2 1
IF THIS BAR DOES NOT MEASURE 1" THEN DRAWING IS NOT TO FULL SCALE

PROJECT NO.
400530

32-M-301
SHEET
OF

PLOTTED: 3/23/2020 1:32:19 PM
D400530

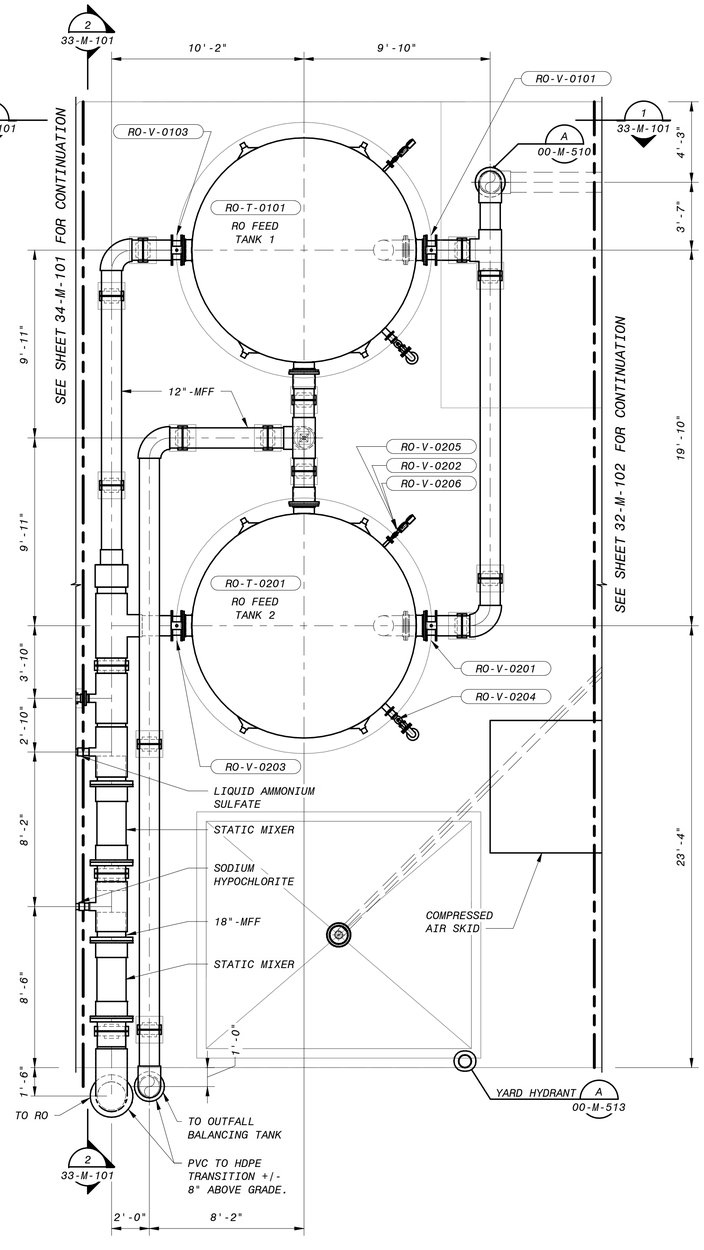

A RO FEED TANKS - OPERATING LEVEL PLAN
30-M-101 1/4" = 1'-0"

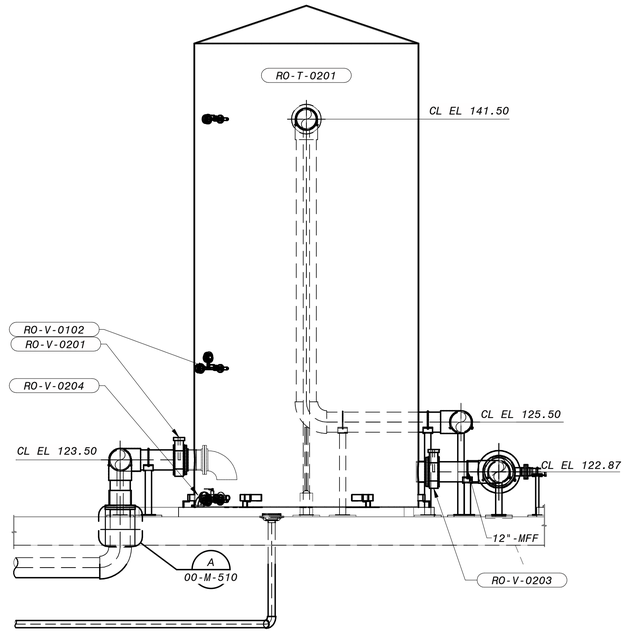

1 SECTION
33-M-101 1/4" = 1'-0"

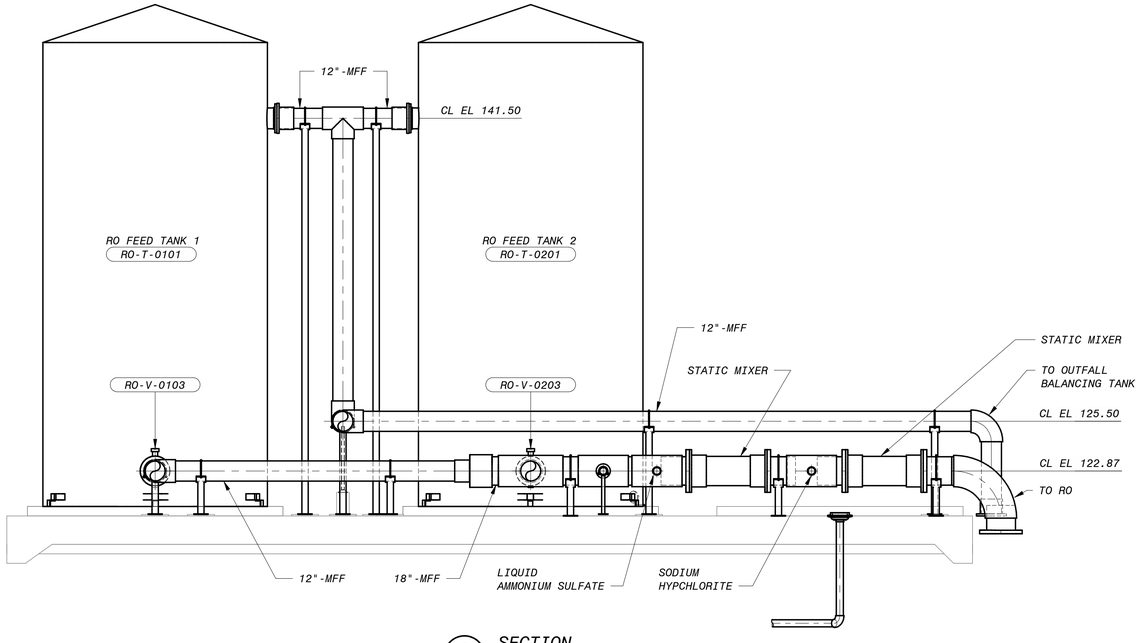

2 SECTION
33-M-101 1/4" = 1'-0"

4' 2' 0' 4' 8'
1/4" = 1'-0"

90% SUBMITTAL- NOT FOR CONSTRUCTION

NO.	BY	CHK	APP	DATE	REVISIONS AND RECORD OF USE
C	KEZ	RT	EVB	3/31/2020	90% SUBMITTAL
B	KEZ	RT	EVB	7/30/2019	60% SUBMITTAL
A	KEZ	RWF	EVB	3/5/2019	30% SUBMITTAL

REGISTERED PROFESSIONAL ENGINEER
ERICK V. BEVINGTON
No. C 78836
CIVIL
STATE OF CALIFORNIA

BLACK & VEATCH

JOINT VENTURE

BLACK & VEATCH

FILANC

CITY OF MORRO BAY
MORRO BAY WATER
RECLAMATION FACILITY (WRF)

TREATMENT AREA - RO FEED TANKS
CIVIL-MECHANICAL
OPERATING LEVEL PLAN AND SECTIONS

DESIGNED: KEZ
DETAILED: MAK
CHECKED:
APPROVED:
DATE:

0 1/2 1
IF THIS BAR DOES NOT MEASURE 1" THEN DRAWING IS NOT TO FULL SCALE

PROJECT NO.
400530

33-M-101
SHEET
OF

PLOTTED: 3/24/2020 8:48:03 AM
D400530

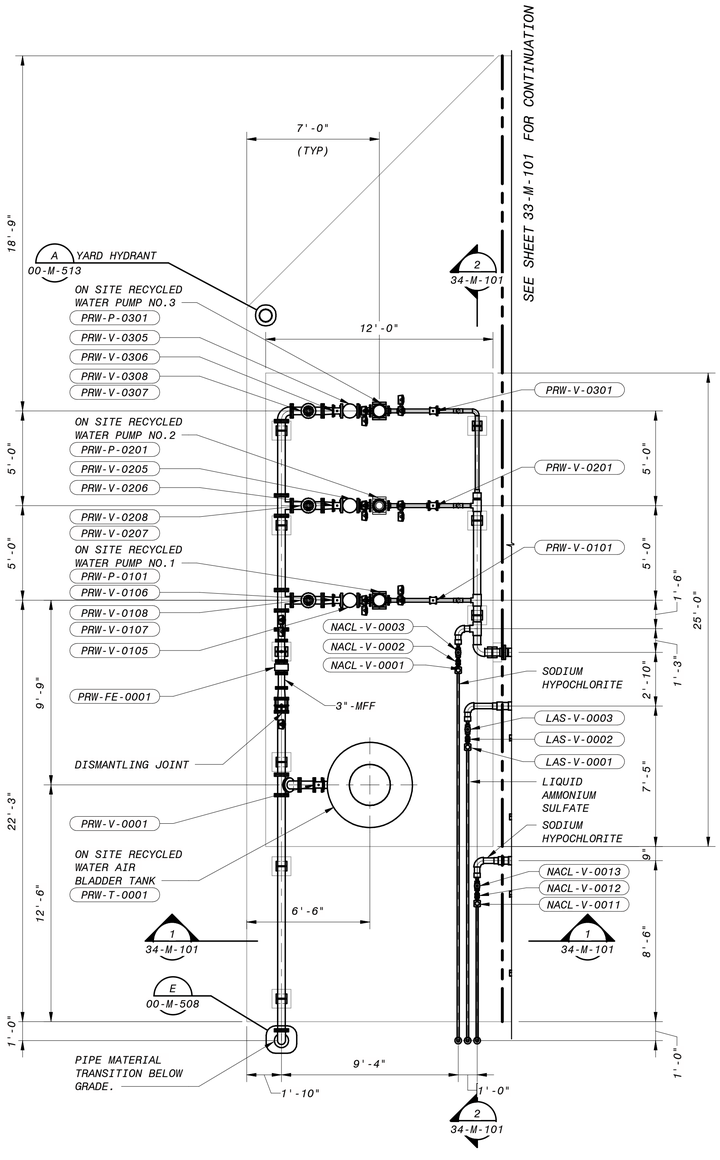

A RECYCLED WATER PUMP STATION - OPERATING LEVEL PLAN

30-M-101 1/4" = 1'-0"

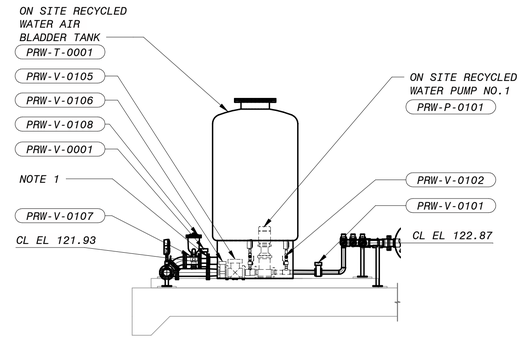

1 SECTION

34-M-101 1/4" = 1'-0"

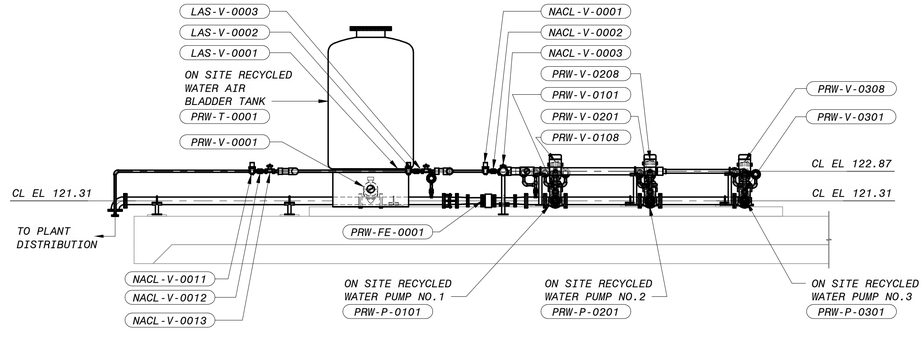

2 SECTION

34-M-101 1/4" = 1'-0"

NOTES:

1. RECYCLED WATER PUMPS AND AIR BLADDER TANK WILL BE PROVIDED BY A SINGLE SUPPLIER. EQUIPMENT ELEVATIONS AND DIMENSIONS WILL BE DEPENDENT ON THE SELECTED SUPPLIER'S PACKAGE. THE DIMENSIONS SHOW THE AVAILABLE SPACE FOR THE PACKAGED PUMP STATION.

NO.	BY	CHK	APP	DATE	REVISIONS AND RECORD OF USE
C	KEZ	RIT	EVB	3/31/2020	90% SUBMITTAL
B	KEZ	RIT	EVB	7/30/2019	60% SUBMITTAL
A	KEZ	RWF	EVB	3/5/2019	30% SUBMITTAL

REGISTERED PROFESSIONAL ENGINEER
ERICK V. BEVINGTON
No. C 78836
CIVIL
STATE OF CALIFORNIA

BLACK & VEATCH

JOINT VENTURE

BLACK & VEATCH

FILANC

CITY OF MORRO BAY
MORRO BAY WATER
RECLAMATION FACILITY (WRF)

TREATMENT AREA - RECYCLED WATER PUMP STATION
CIVIL-MECHANICAL
OPERATING LEVEL PLAN AND SECTIONS

DESIGNED: KEZ
DETAILED: MAK
CHECKED:
APPROVED:
DATE:

0 1/2 1
IF THIS BAR DOES NOT MEASURE 1" THEN DRAWING IS NOT TO FULL SCALE

PROJECT NO.
400530

34-M-101
SHEET
OF

4' 2' 0' 4' 8'
1/4" = 1'-0"

90% SUBMITTAL - NOT FOR CONSTRUCTION

PLOTTED: 3/24/2020 8:44:12 AM
D400530

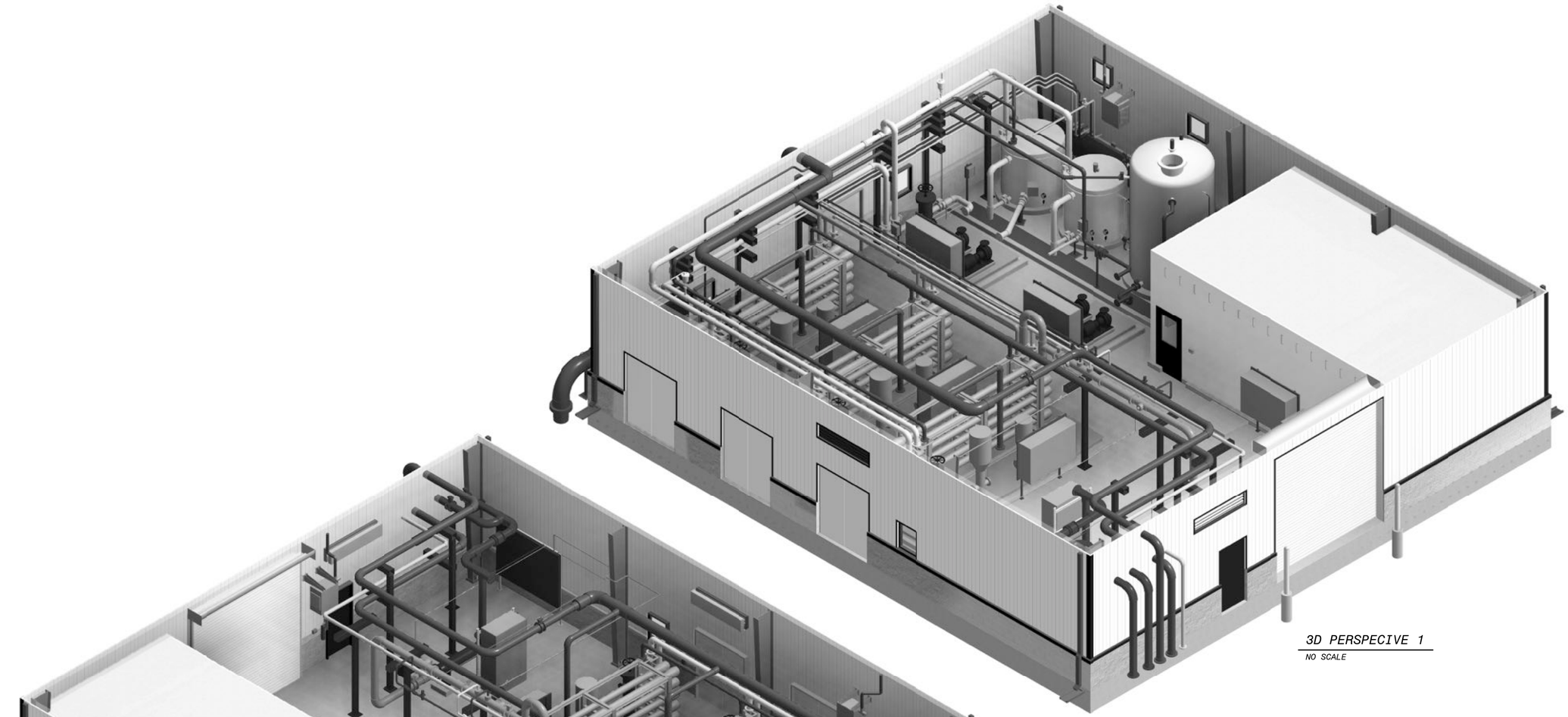

3D PERSPECIVE 1

NO SCALE

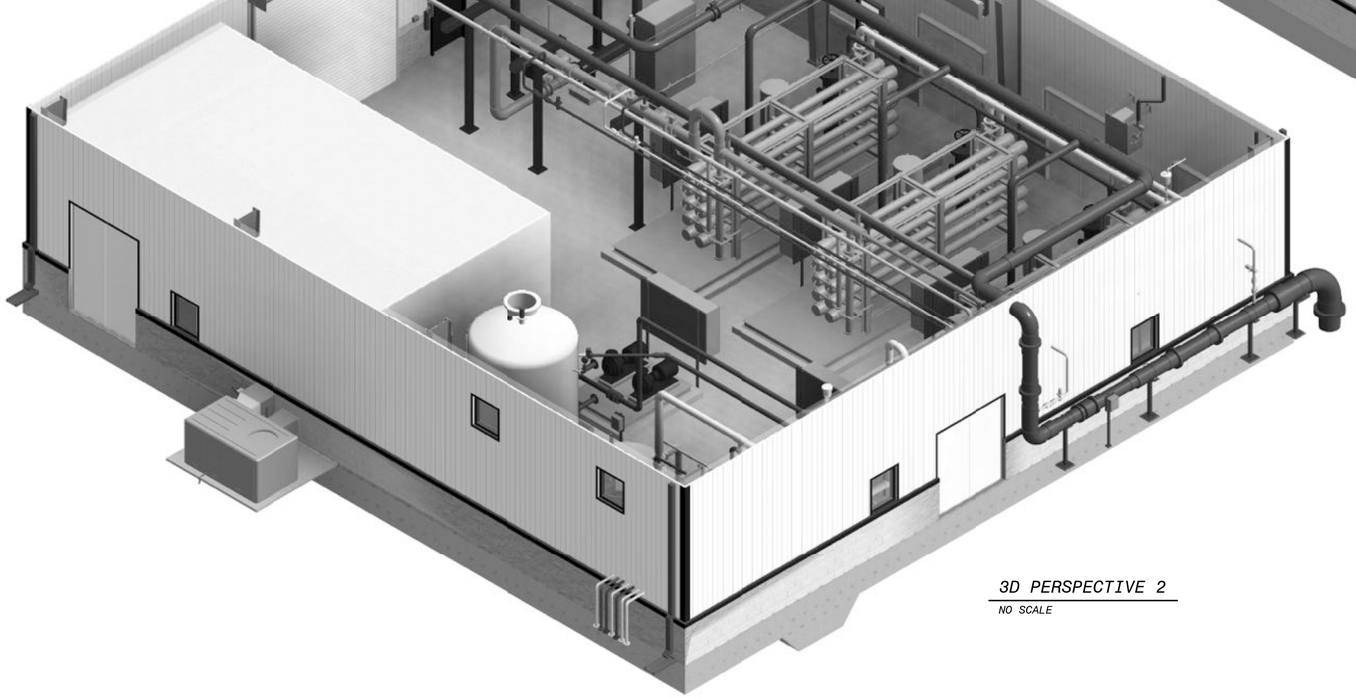

3D PERSPECTIVE 2

NO SCALE

90% SUBMITTAL- NOT FOR CONSTRUCTION

NO.	BY	CHK	APP	DATE	REVISIONS AND RECORD OF USE
C	KEZ	RWF	EVB	3/31/2020	90% SUBMITTAL
B	ADV	RT	EVB	7/30/2019	60% SUBMITTAL
A	ADV	RWF	EVB	3/5/2019	30% SUBMITTAL

REGISTERED PROFESSIONAL ENGINEER
ERICK V. BEVINGTON
No. C 78836
CIVIL
STATE OF CALIFORNIA

BLACK & VEATCH
JOINT VENTURE
FILANC
BLACK & VEATCH

CITY OF MORRO BAY
MORRO BAY WATER
RECLAMATION FACILITY (WRF)

RO/UV BUILDING - OVERALL
CIVIL-MECHANICAL
3D VIEWS

DESIGNED: ADV
DETAILED: MAK
CHECKED:
APPROVED:
DATE:

0 1/2 1
IF THIS BAR DOES NOT MEASURE 1" THEN DRAWING IS NOT TO FULL SCALE

PROJECT NO.
400530

50-M-001
SHEET
OF XXX

PLOTTED: 3/24/2020 1:52:08 PM
D400530

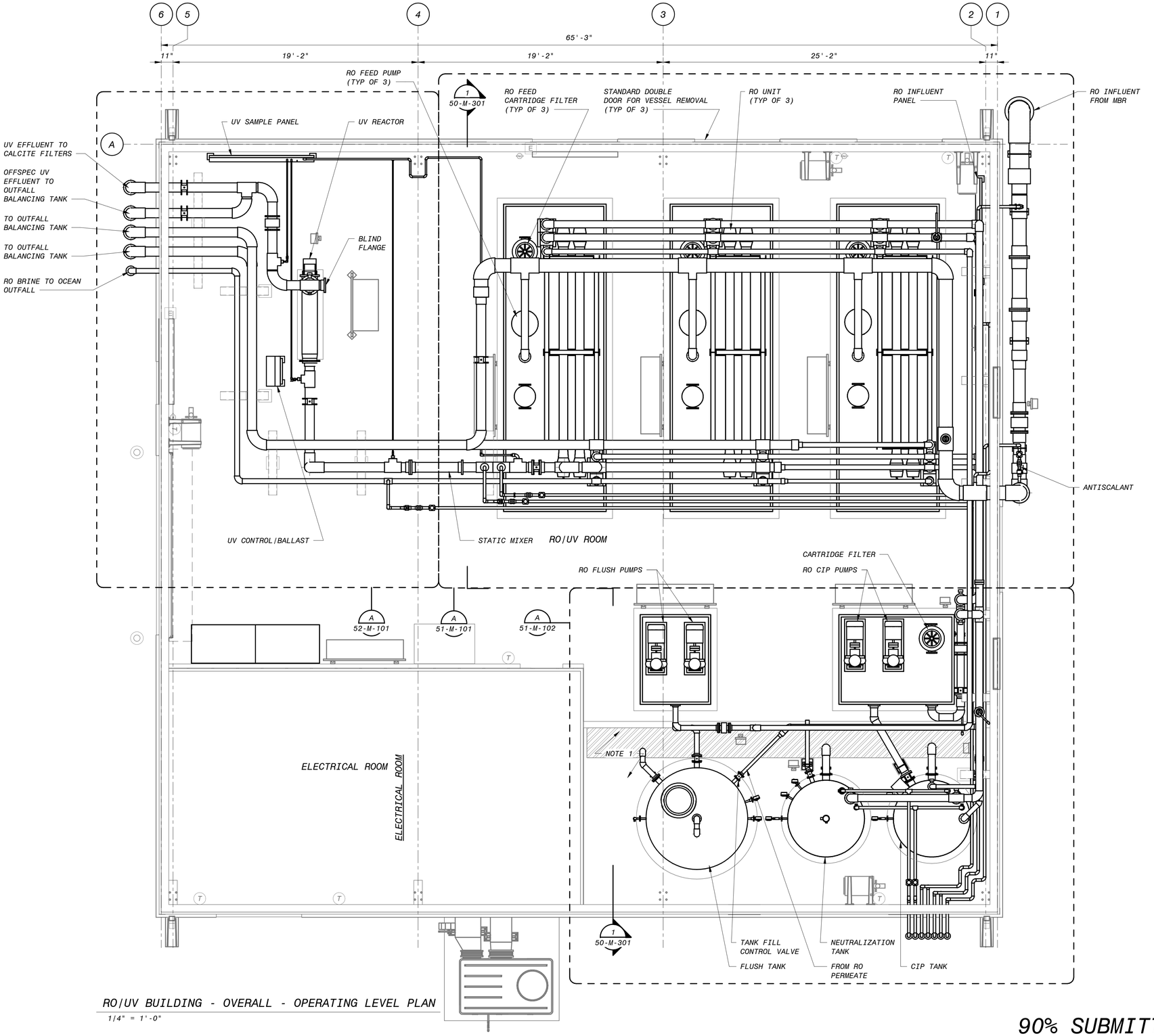

RO/UV BUILDING - OVERALL - OPERATING LEVEL PLAN

1/4" = 1'-0"

NOTES:

1. TANK CONTAINMENT AREA TO BE COATED PER THE REQUIREMENTS OF SPECIFICATION 099724.

4' 2' 0' 4' 8'

1/4" = 1'-0"

90% SUBMITTAL - NOT FOR CONSTRUCTION

NO.	BY	CHK	APP	DATE	REVISIONS AND RECORD OF USE
C	KEZ	RWF	EVB	3/31/2020	90% SUBMITTAL
B	ADV	RT	EVB	7/30/2019	60% SUBMITTAL
A	ADV	RWF	EVB	3/5/2019	30% SUBMITTAL

REGISTERED PROFESSIONAL ENGINEER
ERICK V. BEVINGTON
No. C 78836
CIVIL
STATE OF CALIFORNIA

BLACK & VEATCH
JOINT VENTURE
BLACK & VEATCH
FILANC

CITY OF MORRO BAY
MORRO BAY WATER
RECLAMATION FACILITY (WRF)

RO/UV BUILDING - OVERALL
CIVIL-MECHANICAL
OPERATING LEVEL PLAN

DESIGNED: ADV
DETAILED: MAK
CHECKED:
APPROVED:
DATE:

0 1/2 1
IF THIS BAR DOES NOT MEASURE 1" THEN DRAWING IS NOT TO FULL SCALE

PROJECT NO.
400530

50-M-101
SHEET
OF XXX

PLOTTED: 3/24/2020 1:52:15 PM
D400530

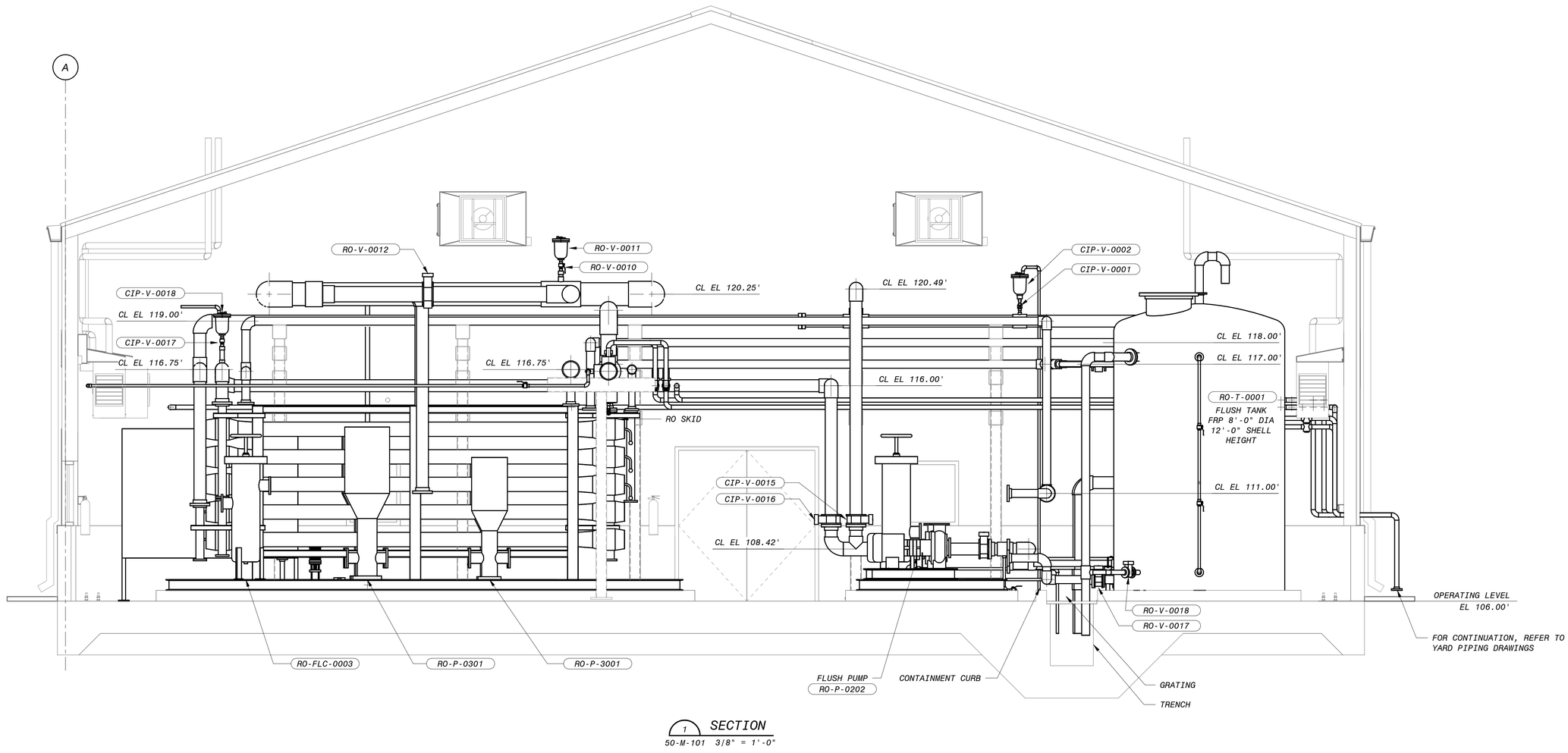

1 SECTION
50-M-101 3/8" = 1'-0"

12" 0' 1' 2' 3' 4' 5' 6' 7'
3/8" = 1'-0"

90% SUBMITTAL- NOT FOR CONSTRUCTION

NO.	BY	CHK	APP	DATE	REVISIONS AND RECORD OF USE
C	KEZ	RWF	EVB	3/31/2020	90% SUBMITTAL
B	ADV	RT	EVB	7/30/2019	60% SUBMITTAL
A	ADV	RWF	EVB	3/5/2019	30% SUBMITTAL

REGISTERED PROFESSIONAL ENGINEER
ERICK V. BEVINGTON
No. C 78836
CIVIL
STATE OF CALIFORNIA

BLACK & VEATCH

JOINT VENTURE

BLACK & VEATCH

FILANC

CITY OF MORRO BAY
MORRO BAY WATER
RECLAMATION FACILITY (WRF)

RO/UV BUILDING - OVERALL
CIVIL-MECHANICAL
SECTION

DESIGNED: ADV
DETAILED: MAK
CHECKED:
APPROVED:
DATE:

0 1/2 1
IF THIS BAR DOES NOT MEASURE 1" THEN DRAWING IS NOT TO FULL SCALE

PROJECT NO.
400530

50-M-301
SHEET
OF XXX

PLOTTED: 3/24/2020 1:52:19 PM
D400530

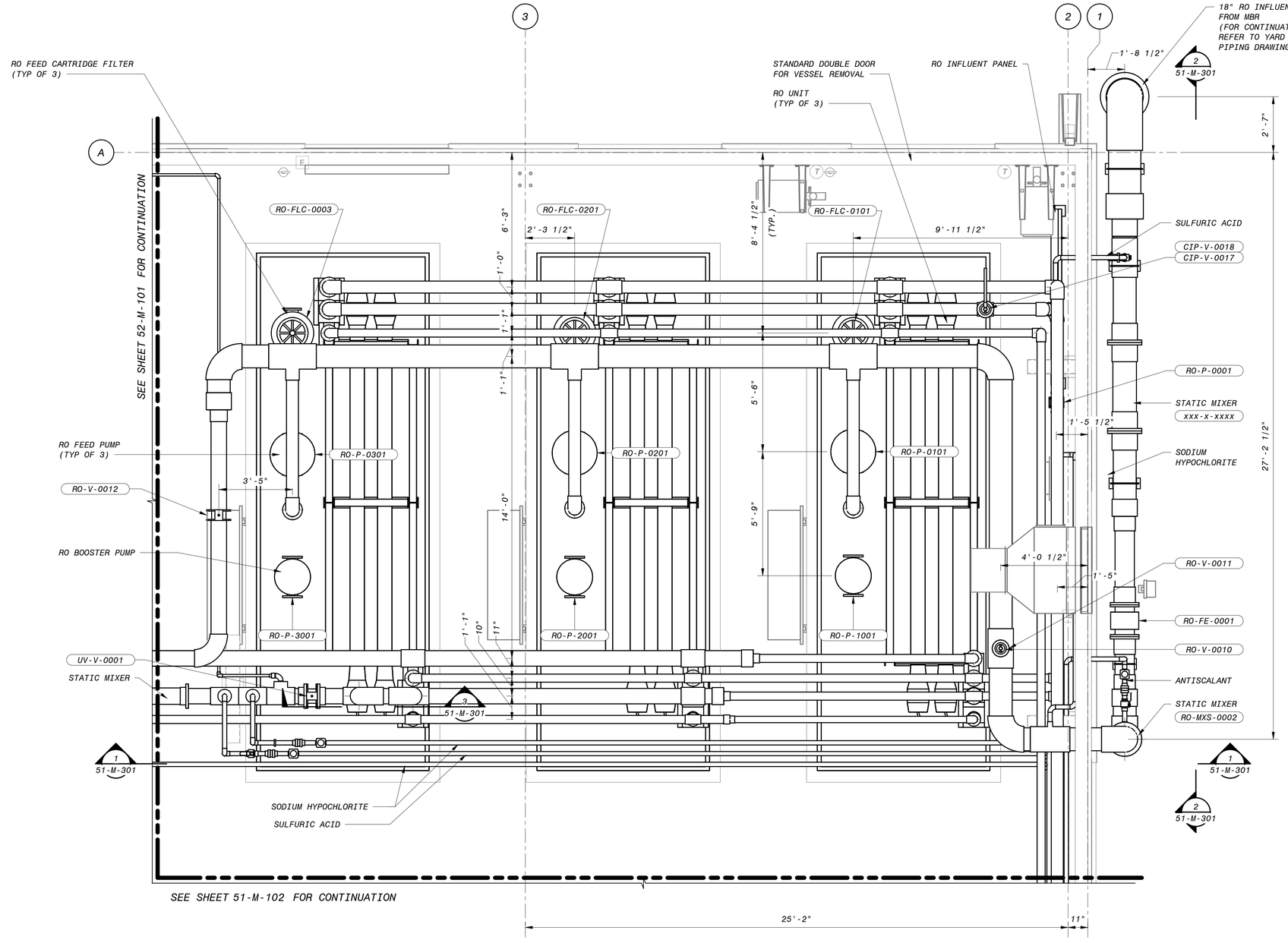

A RO SYSTEM - MEMBRANE RACKS PLAN
50-M-101 3/8" = 1'-0"

NOTES:
1. RO CONFIGURATION AND CONNECTION LOCATIONS TO BE FINALIZED WHEN EQUIPMENT SELECTED.

NO.	BY	CHK	APP	DATE	REVISIONS AND RECORD OF USE
C	KEZ	RWF	EVB	3/31/2020	90% SUBMITTAL
B	ADV	RT	EVB	7/30/2019	60% SUBMITTAL
A	ADV	RWF	EVB	3/5/2019	30% SUBMITTAL

REGISTERED PROFESSIONAL ENGINEER
ERICK V. BEVINGTON
No. C 78836
STATE OF CALIFORNIA - CIVIL

BLACK & VEATCH
JOINT VENTURE
BLACK & VEATCH
FILANC

CITY OF MORRO BAY
MORRO BAY WATER
RECLAMATION FACILITY (WRF)

RO/UV BUILDING - RO SYSTEM
CIVIL-MECHANICAL
MEMBRANE RACKS PLAN

DESIGNED: ADV
DETAILED: RMB
CHECKED:
APPROVED:
DATE:

0 1/2 1
IF THIS BAR DOES NOT MEASURE 1" THEN DRAWING IS NOT TO FULL SCALE

PROJECT NO.
400530

51-M-101
SHEET
OF XXX

12" 0' 1' 2' 3' 4' 5' 6' 7'
3/8" = 1'-0"

90% SUBMITTAL - NOT FOR CONSTRUCTION

PLOTTED: 3/24/2020 1:52:23 PM
D400530

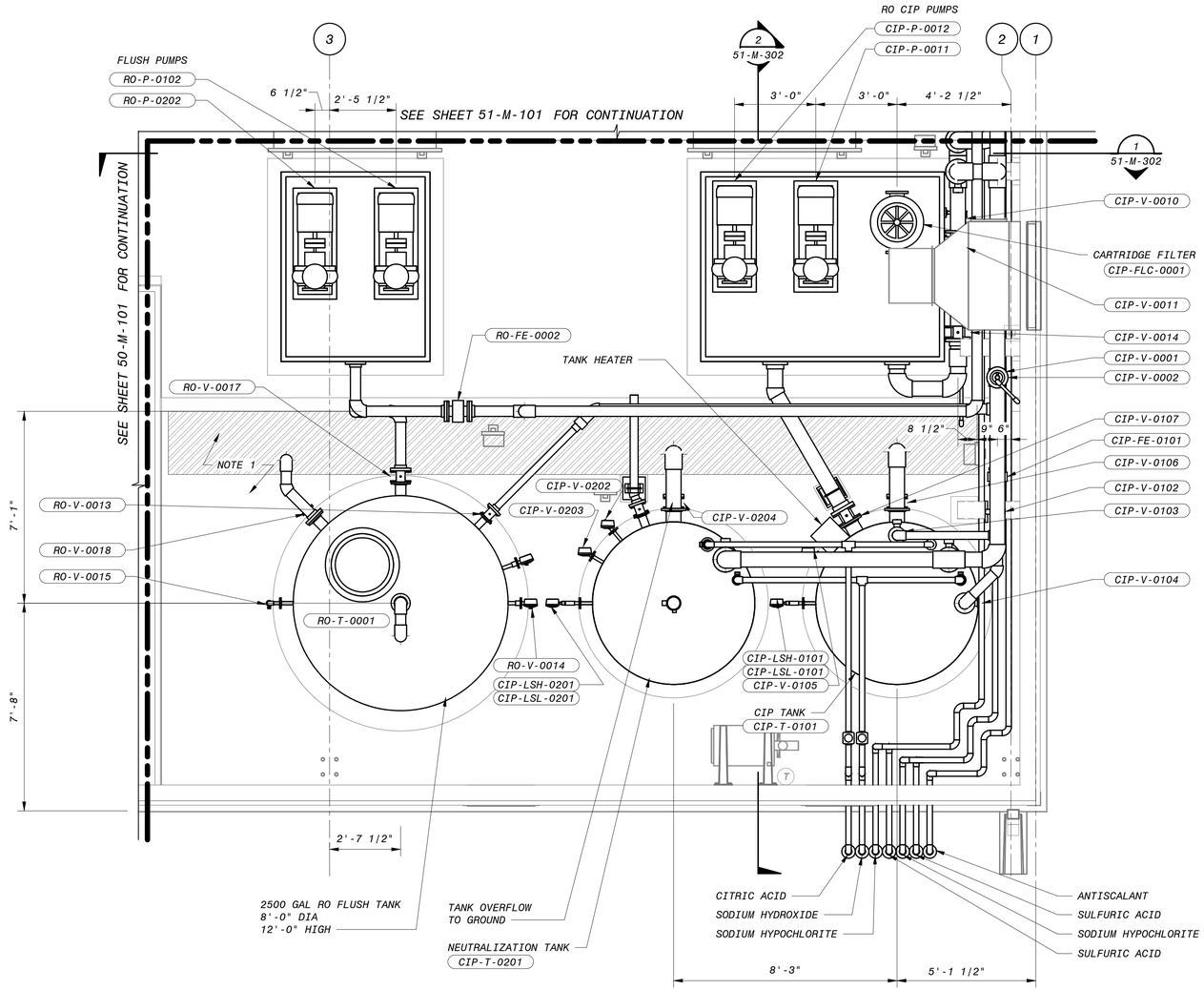

A RO SYSTEM - CIP & FLUSH SYSTEMS PLAN

50-M-101 3/8" = 1'-0"

NOTES:

1. CIP TANK AREA AND CONTAINMENT TRENCH TO BE COATED PER REQUIREMENTS OF CORROSION PROTECTION SYSTEMS SPECIFICATIONS.

NO.	BY	CHK	APP	DATE	REVISIONS AND RECORD OF USE
C	KEZ	RWF	EVB	3/31/2020	90% SUBMITTAL
B	ADV	RT	EVB	7/30/2019	60% SUBMITTAL
A	ADV	RWF	EVB	3/5/2019	30% SUBMITTAL

REGISTERED PROFESSIONAL ENGINEER
ERICK V. BEVINGTON
No. C 78836
CIVIL
STATE OF CALIFORNIA

BLACK & VEATCH
JOINT VENTURE
BLACK & VEATCH
FILANC

CITY OF MORRO BAY
MORRO BAY WATER
RECLAMATION FACILITY (WRF)

RO/UV BUILDING - RO SYSTEM
CIVIL-MECHANICAL
CIP & FLUSH SYSTEMS PLAN

DESIGNED: Designer
DETAILED: Author
CHECKED: Checker
APPROVED: Approver
DATE:

0 1/2 1
IF THIS BAR DOES NOT MEASURE 1" THEN DRAWING IS NOT TO FULL SCALE

PROJECT NO.
400530

51-M-102
SHEET
OF XXX

12" 0' 1' 2' 3' 4' 5' 6' 7'
3/8" = 1'-0"

90% SUBMITTAL- NOT FOR CONSTRUCTION

PLOTTED: 3/24/2020 1:52:27 PM
D400530

NOTES:

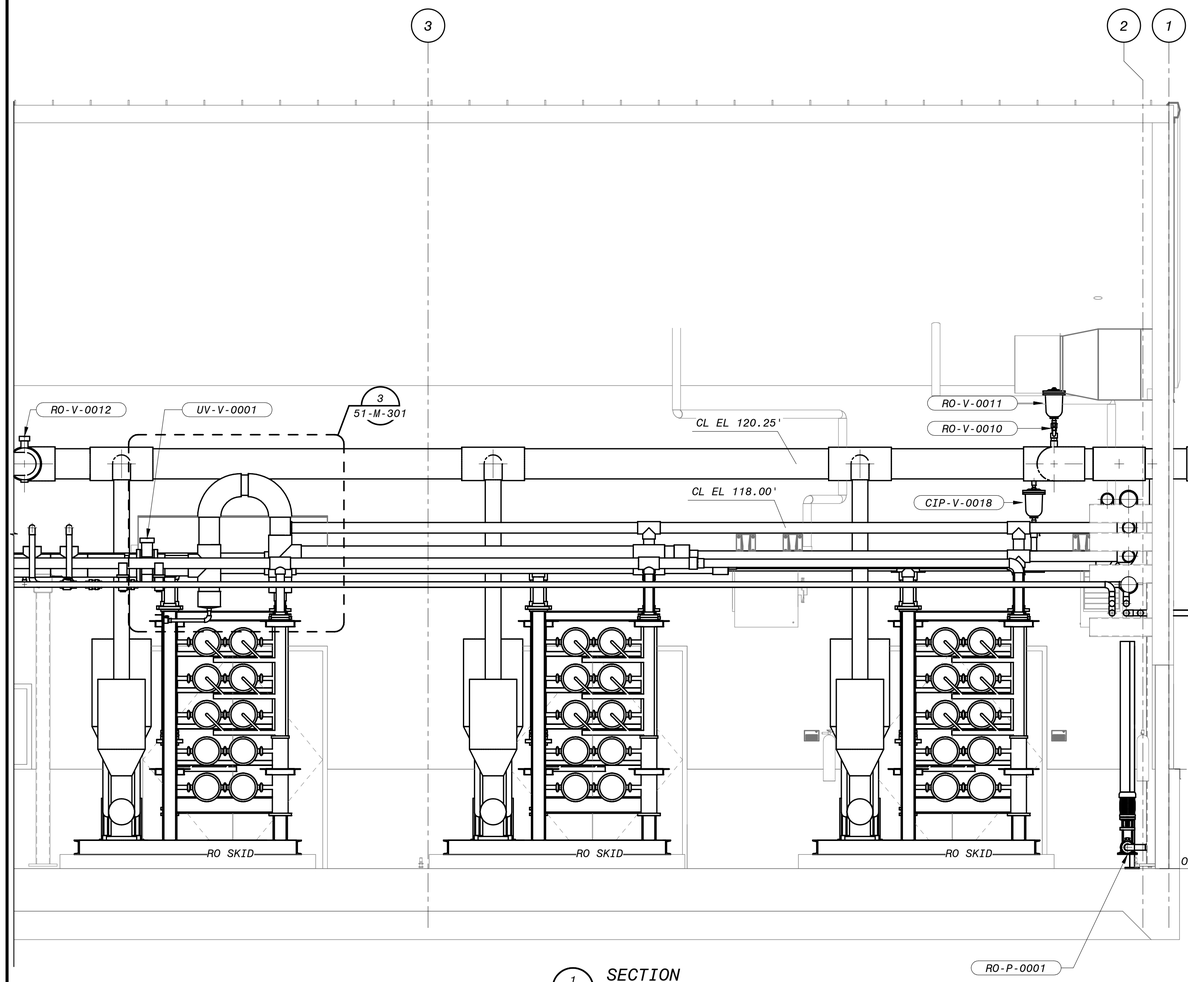

1 SECTION
51-M-101 3/8" = 1'-0"

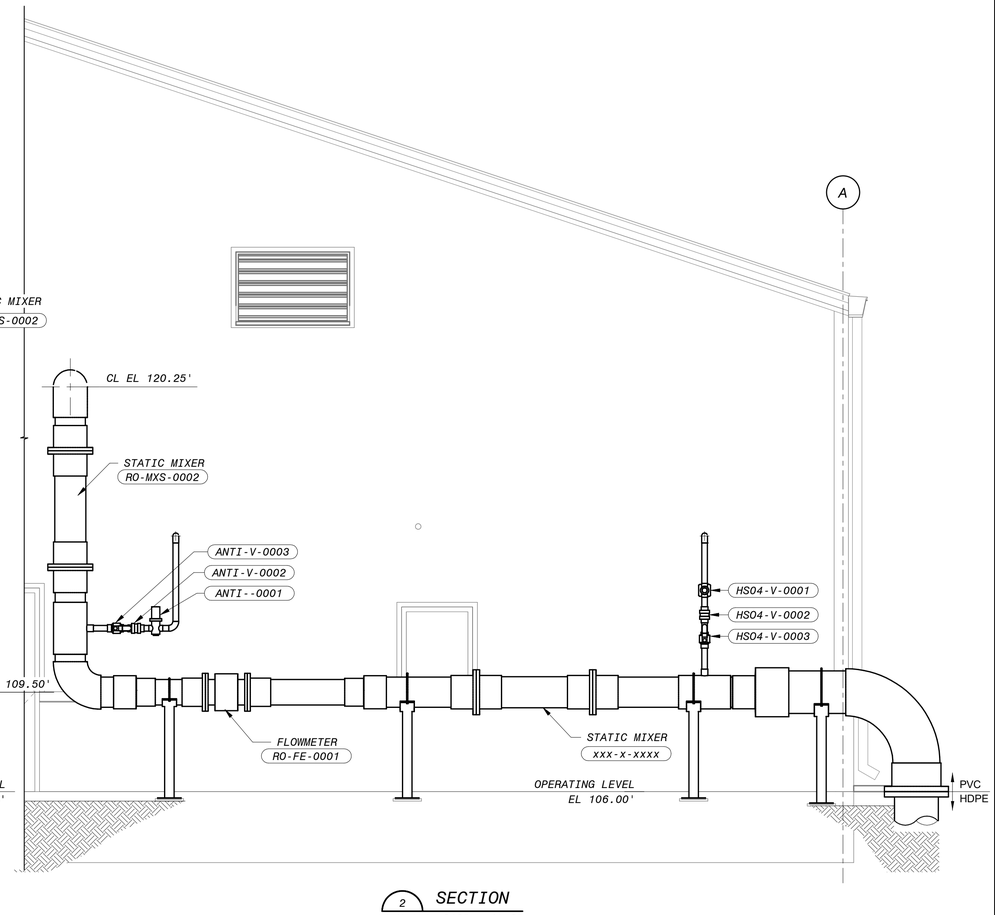

2 SECTION
51-M-101 3/8" = 1'-0"

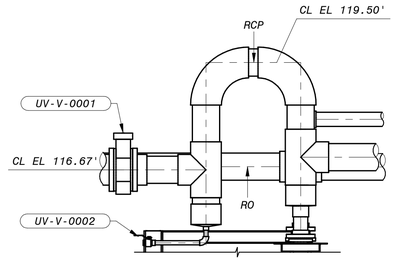

BACKFLOW PREVENTION LOOP

3 SECTION
51-M-101 1/2" = 1'-0"

12' 6' 0' 1' 2' 3' 4' 5'
1/2" = 1'-0"

12" 0' 1' 2' 3' 4' 5' 6' 7'
3/8" = 1'-0"

90% SUBMITTAL- NOT FOR CONSTRUCTION

NO.	BY	CHK	APP	DATE	REVISIONS AND RECORD OF USE
C	KEZ	RWF	EVB	3/31/2020	90% SUBMITTAL
B	ADV	RT	EVB	7/30/2019	60% SUBMITTAL
A	ADV	RWF	EVB	3/5/2019	30% SUBMITTAL

REGISTERED PROFESSIONAL ENGINEER
ERICK V. BEVINGTON
No. C 78836
CIVIL
STATE OF CALIFORNIA

BLACK & VEATCH
JOINT VENTURE
BLACK & VEATCH
FILANC

CITY OF MORRO BAY
MORRO BAY WATER
RECLAMATION FACILITY (WRF)

RO-UV BUILDING - RO SYSTEM
CIVIL-MECHANICAL
SECTIONS AND DETAILS 1

DESIGNED: Designer
DETAILED: Author
CHECKED: Checker
APPROVED: Approver
DATE:

0 1/2 1
IF THIS BAR DOES NOT MEASURE 1" THEN DRAWING IS NOT TO FULL SCALE

PROJECT NO.
400530

51-M-301
SHEET
OF XXX

PLOTTED: 3/24/2020 1:52:32 PM
D400530

NOTES:

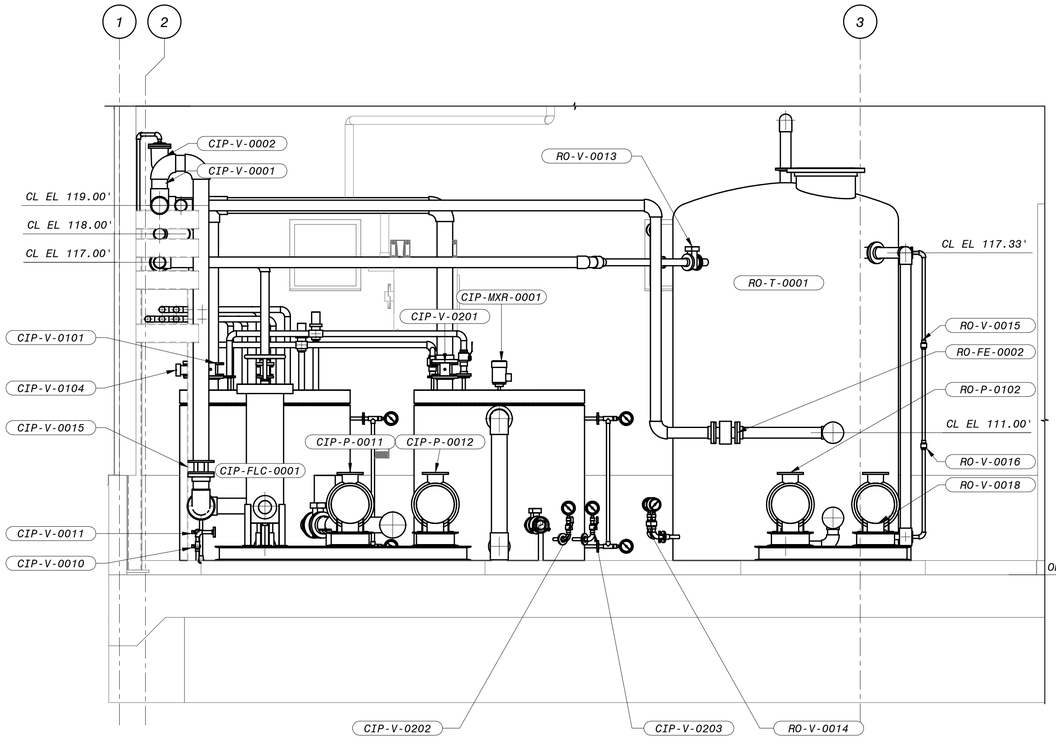

1 SECTION
51-M-102 3/8" = 1'-0"

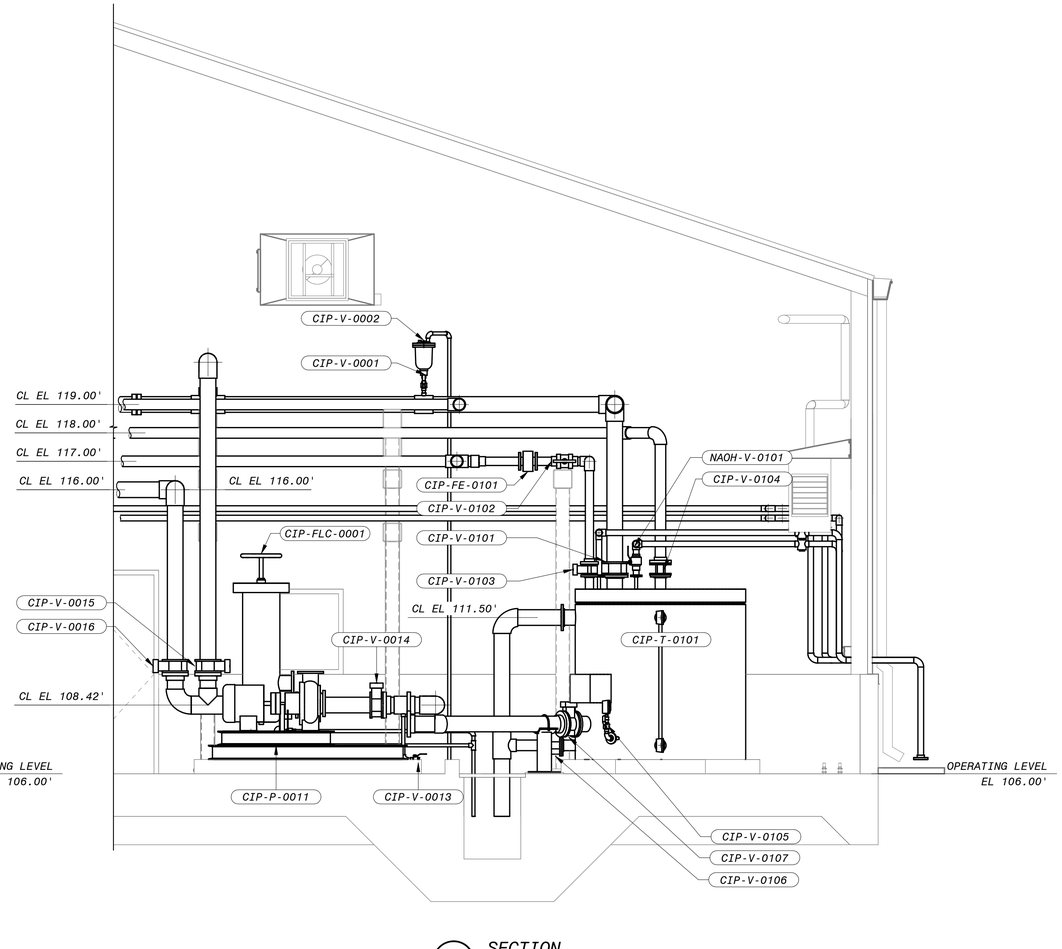

2 SECTION
51-M-102 3/8" = 1'-0"

12" 0' 1' 2' 3' 4' 5' 6' 7'
3/8" = 1'-0"

90% SUBMITTAL - NOT FOR CONSTRUCTION

NO.	DATE	REVISIONS AND RECORD OF USE	BY	CHK	APP
C	3/31/2020	90% SUBMITTAL	KEZ	RWF	EVB
B	7/30/2019	60% SUBMITTAL	ADV	RT	EVB
A	3/5/2019	30% SUBMITTAL	ADV	RWF	EVB

REGISTERED PROFESSIONAL ENGINEER
ERICK V. BEVINGTON
No. C 78836
CIVIL
STATE OF CALIFORNIA

BLACK & VEATCH
JOINT VENTURE
BLACK & VEATCH
FILANC

CITY OF MORRO BAY
MORRO BAY WATER
RECLAMATION FACILITY (WRF)

RO/UV BUILDING - RO SYSTEM
CIVIL-MECHANICAL
SECTIONS AND DETAILS 2

DESIGNED: Designer
DETAILED: Author
CHECKED: Checker
APPROVED: Approver
DATE:

0 1/2 1
IF THIS BAR DOES NOT MEASURE 1" THEN DRAWING IS NOT TO FULL SCALE

PROJECT NO.
400530

51-M-302
SHEET
OF XXX

PLOTTED: 3/24/2020 1:52:36 PM
D400530

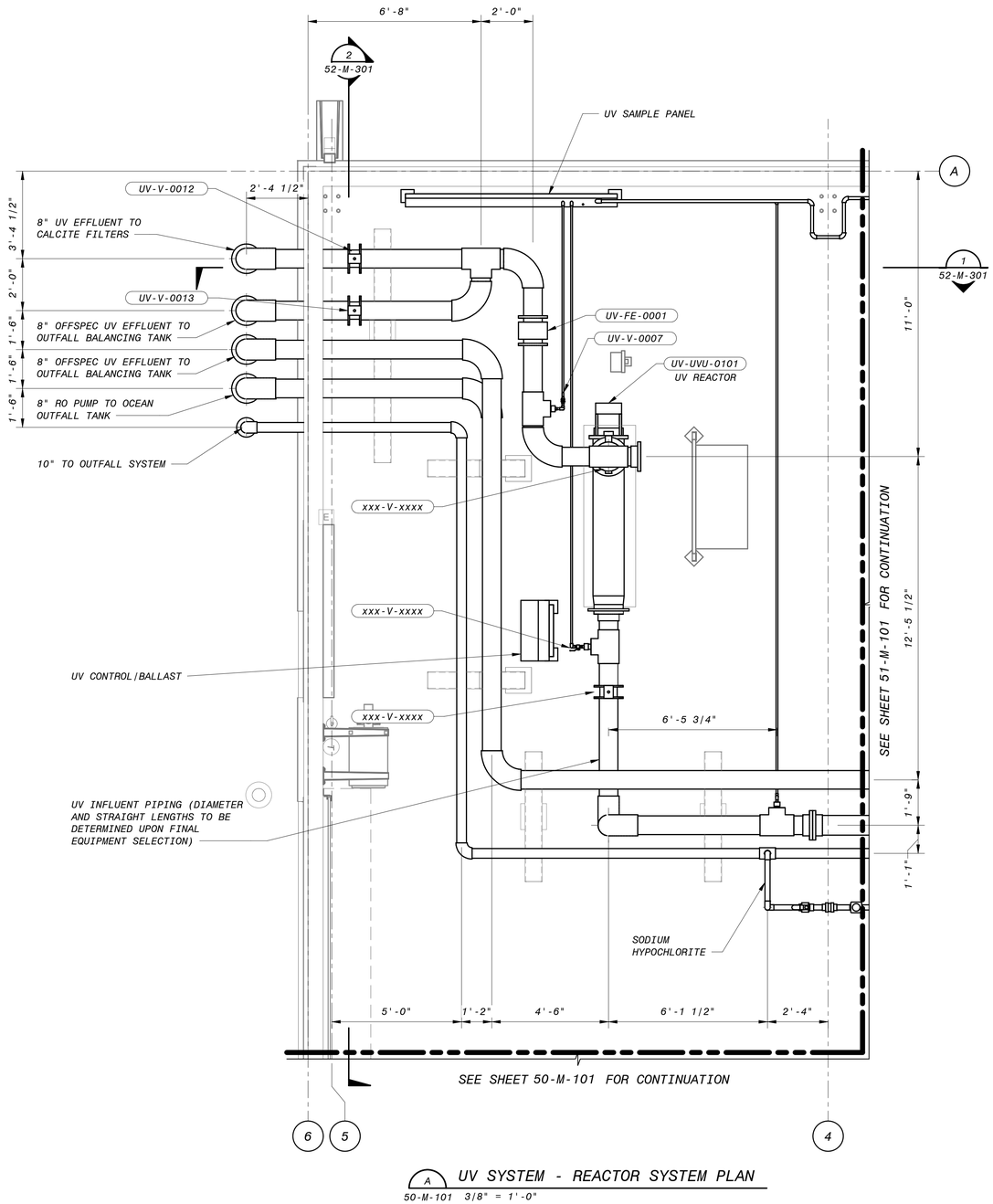

A UV SYSTEM - REACTOR SYSTEM PLAN
50-M-101 3/8" = 1'-0"

NOTES:

NO.	BY	CHK	APP	DATE	REVISIONS AND RECORD OF USE
C	KEZ	RWF	EVB	3/31/2020	90% SUBMITTAL
B	ADV	RT	EVB	7/30/2019	60% SUBMITTAL
A	ADV	RWF	EVB	3/5/2019	30% SUBMITTAL

REGISTERED PROFESSIONAL ENGINEER
ERICK V. BEVINGTON
No. C 78836
CIVIL
STATE OF CALIFORNIA

BLACK & VEATCH

JOINT VENTURE

FILANC

BLACK & VEATCH

CITY OF MORRO BAY
MORRO BAY WATER
RECLAMATION FACILITY (WRF)

RO/UV BUILDING - UV SYSTEM
CIVIL-MECHANICAL
REACTOR SYSTEM PLAN

DESIGNED: Designer
DETAILED: Author
CHECKED: Checker
APPROVED: Approver
DATE:

0 1/2 1
IF THIS BAR DOES NOT MEASURE 1" THEN DRAWING IS NOT TO FULL SCALE

12" 0' 1' 2' 3' 4' 5' 6' 7'
3/8" = 1'-0"

PROJECT NO.
400530

52-M-101
SHEET
OF XXX

90% SUBMITTAL- NOT FOR CONSTRUCTION

PLOTTED: 3/24/2020 1:52:39 PM
D400530

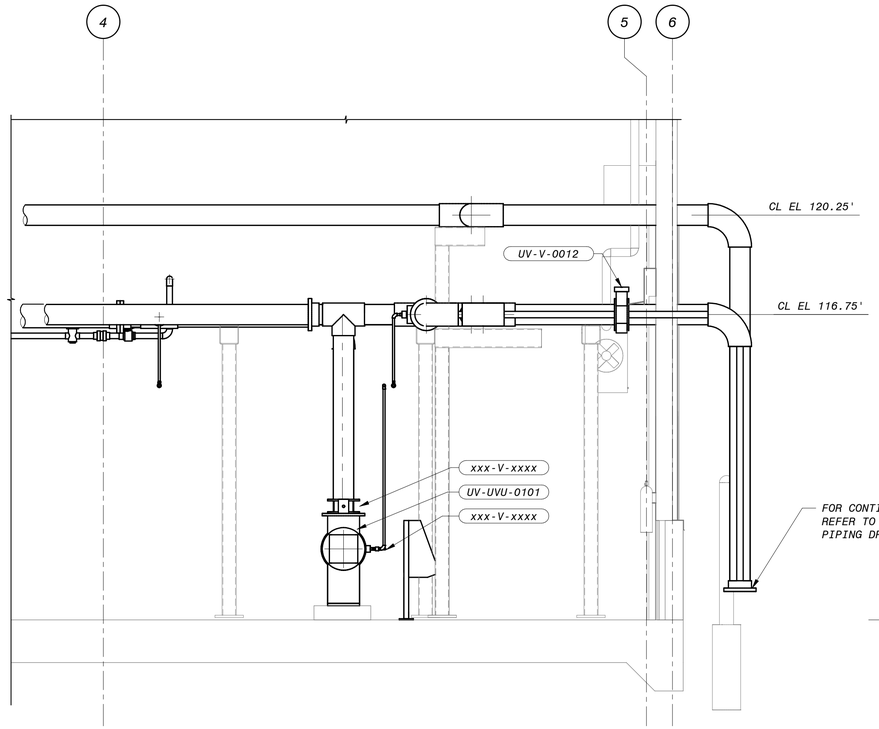

1 SECTION
52-M-101 3/8" = 1'-0"

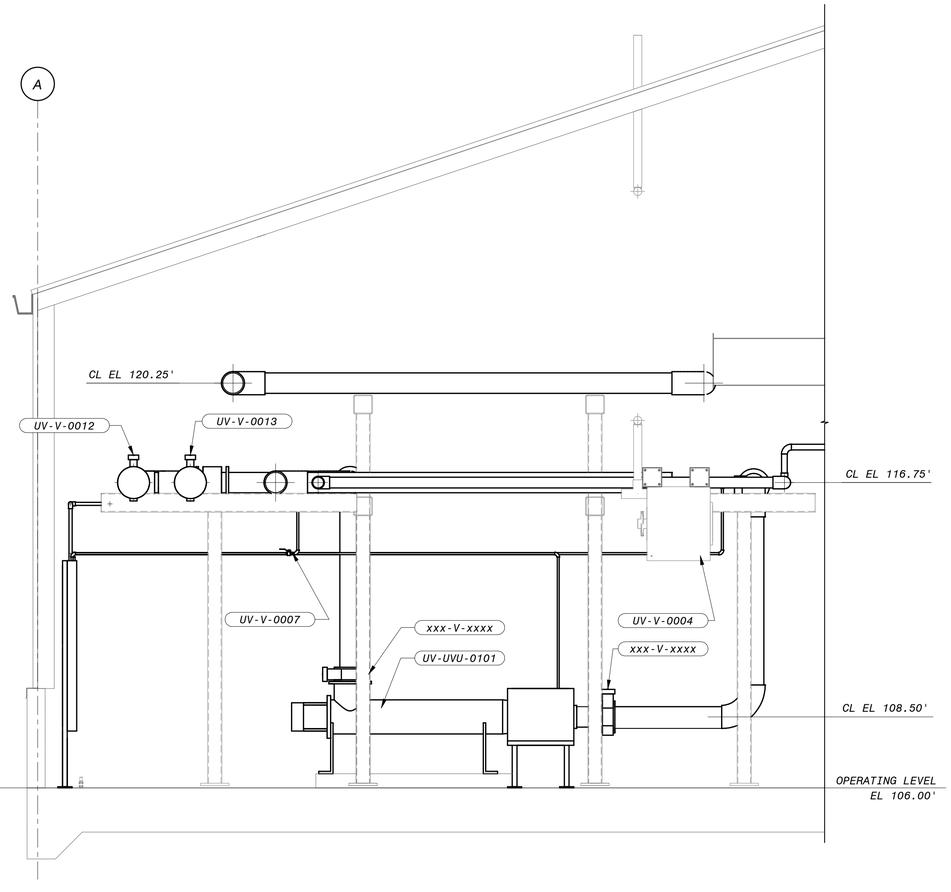

2 SECTION
52-M-101 3/8" = 1'-0"

12" 0' 1' 2' 3' 4' 5' 6' 7'
3/8" = 1'-0"

90% SUBMITTAL- NOT FOR CONSTRUCTION

NO.	BY	CHK	APP	DATE	REVISIONS AND RECORD OF USE
C	KEZ	RWF	EVB	3/31/2020	90% SUBMITTAL
B	ADV	RT	EVB	7/30/2019	60% SUBMITTAL
A	ADV	RWF	EVB	3/5/2019	30% SUBMITTAL

REGISTERED PROFESSIONAL ENGINEER
ERICK V. BEVINGTON
No. C 78836
CIVIL
STATE OF CALIFORNIA

BLACK & VEATCH

JOINT VENTURE

BLACK & VEATCH

FILANC

CITY OF MORRO BAY
MORRO BAY WATER
RECLAMATION FACILITY (WRF)

RO/UV BUILDING - UV SYSTEM
CIVIL-MECHANICAL
SECTIONS AND DETAILS 1

DESIGNED: Designer
DETAILED: Author
CHECKED: Checker
APPROVED: Approver
DATE:

0 1/2 1
IF THIS BAR DOES NOT MEASURE 1" THEN DRAWING IS NOT TO FULL SCALE

PROJECT NO.
400530

52-M-301
SHEET
OF XXX

PLOTTED: 3/24/2020 1:52:42 PM
D400530

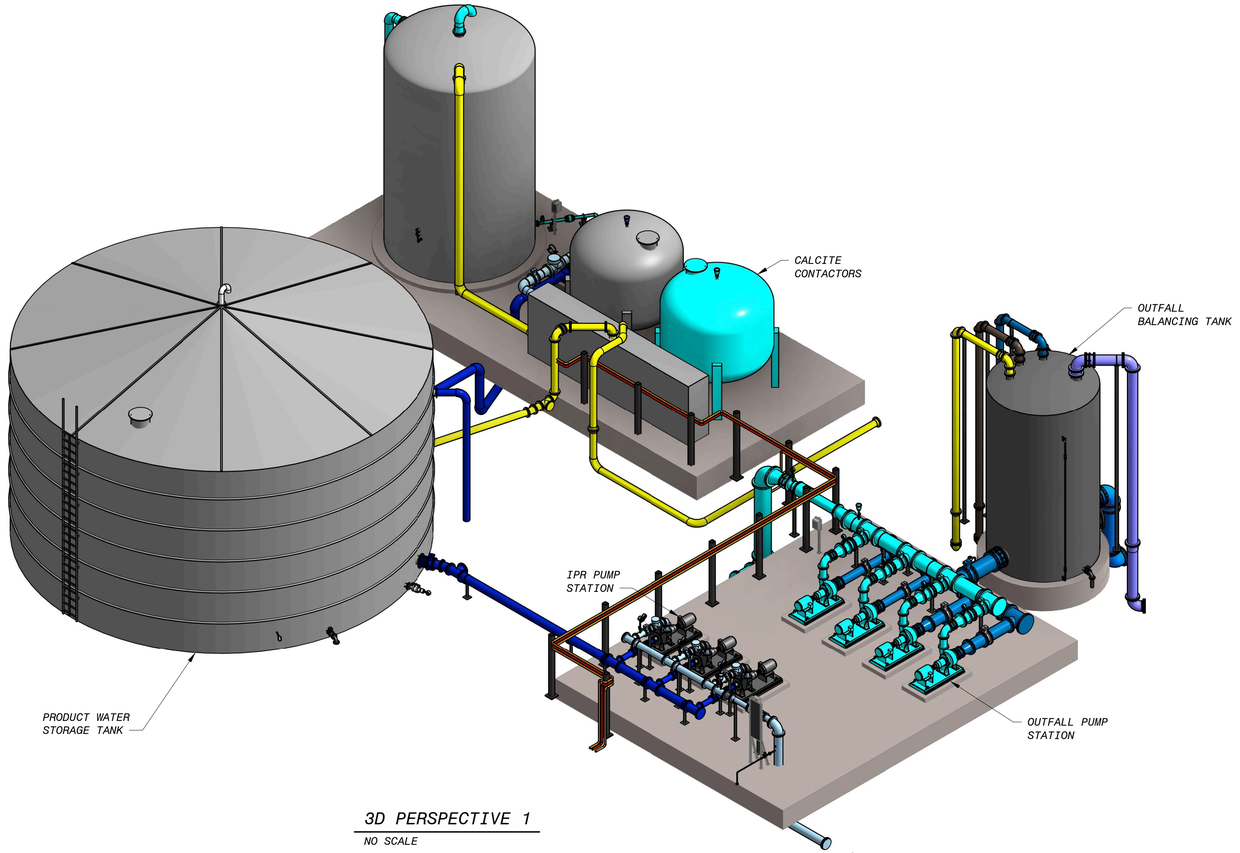

3D PERSPECTIVE 1

NO SCALE

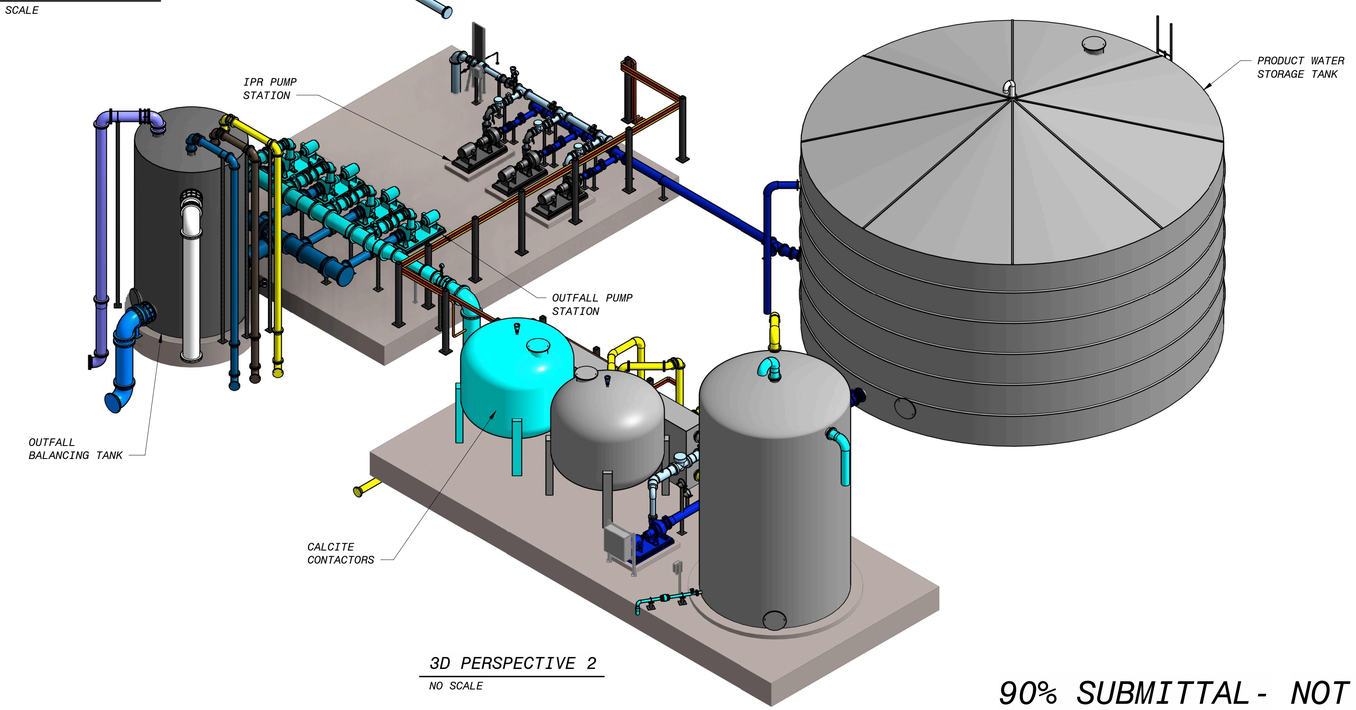

3D PERSPECTIVE 2

NO SCALE

90% SUBMITTAL - NOT FOR CONSTRUCTION

NO.	DATE	REVISIONS AND RECORD OF USE	BY	CHK	APP
C	3/31/2020	90% SUBMITTAL	KEZ	RWF	EVB
B	7/30/2019	60% SUBMITTAL	KEZ	RT	EVB
A	3/5/2019	30% SUBMITTAL	KEZ	RWF	EVB

REGISTERED PROFESSIONAL ENGINEER
ERICK V. BEVINGTON
No. C 78836
CIVIL
STATE OF CALIFORNIA

BLACK & VEATCH
JOINT VENTURE
BLACK & VEATCH
FILANC

CITY OF MORRO BAY
MORRO BAY WATER
RECLAMATION FACILITY (WRF)

PRODUCT WATER AREA - OVERALL
CIVIL-MECHANICAL
3D VIEWS

DESIGNED: KEZ, EVB
DETAILED: MAK
CHECKED:
APPROVED:
DATE:

0 1/2 1
IF THIS BAR DOES NOT MEASURE 1" THEN DRAWING IS NOT TO FULL SCALE

PROJECT NO.
400530

60-M-001
SHEET
OF

PLOTTED: 3/24/2020 12:58:23 PM
D400530

NOTES:

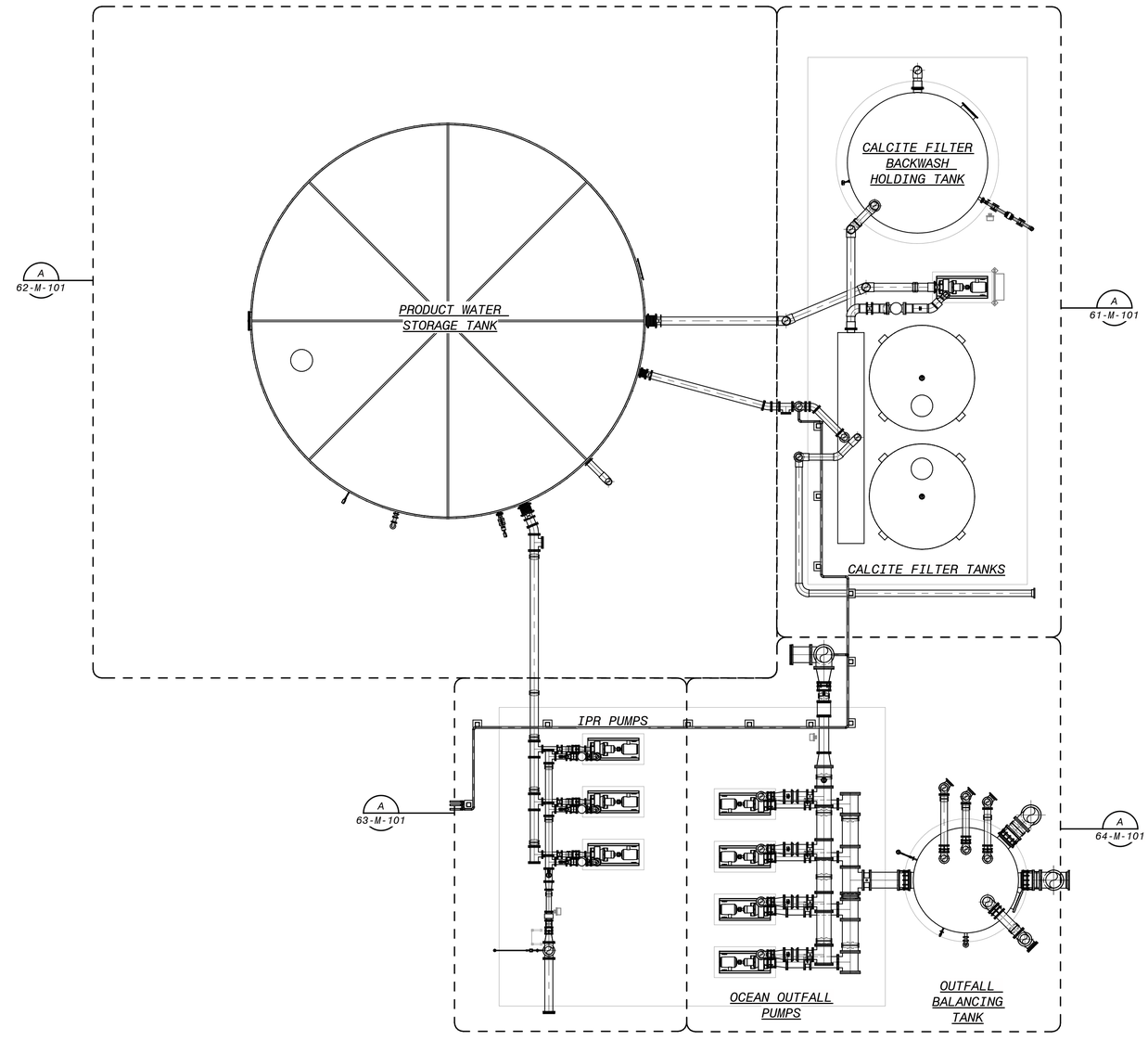

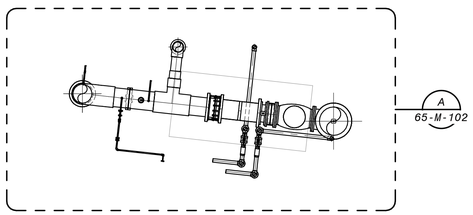

DECHLORINATION STATION

PRODUCT WATER AREA - OVERALL - OPERATING LEVEL PLAN

1/8" = 1'-0"

8' 4' 0' 8' 16'

1/8" = 1'-0"

90% SUBMITTAL - NOT FOR CONSTRUCTION

NO.	BY	CHK	APP	DATE	REVISIONS AND RECORD OF USE
C	KEZ	RWF	EVB	3/31/2020	90% SUBMITTAL
B	KEZ	RT	EVB	7/30/2019	60% SUBMITTAL
A	KEZ	RWF	EVB	3/5/2019	30% SUBMITTAL

REGISTERED PROFESSIONAL ENGINEER
ERICK V. BEVINGTON
No. C 78836
CIVIL
STATE OF CALIFORNIA

BLACK & VEATCH
JOINT VENTURE
BLACK & VEATCH
FILANC

CITY OF MORRO BAY
MORRO BAY WATER
RECLAMATION FACILITY (WRF)

PRODUCT WATER AREA - OVERALL
CIVIL-MECHANICAL
OPERATING LEVEL PLAN

DESIGNED: Designer
DETAILED: Author
CHECKED: Checker
APPROVED: Approver
DATE:

0 1/2 1
IF THIS BAR DOES NOT MEASURE 1" THEN DRAWING IS NOT TO FULL SCALE

PROJECT NO.
400530

60-M-101
SHEET
OF

PLOTTED: 3/24/2020 12:58:29 PM
D400530

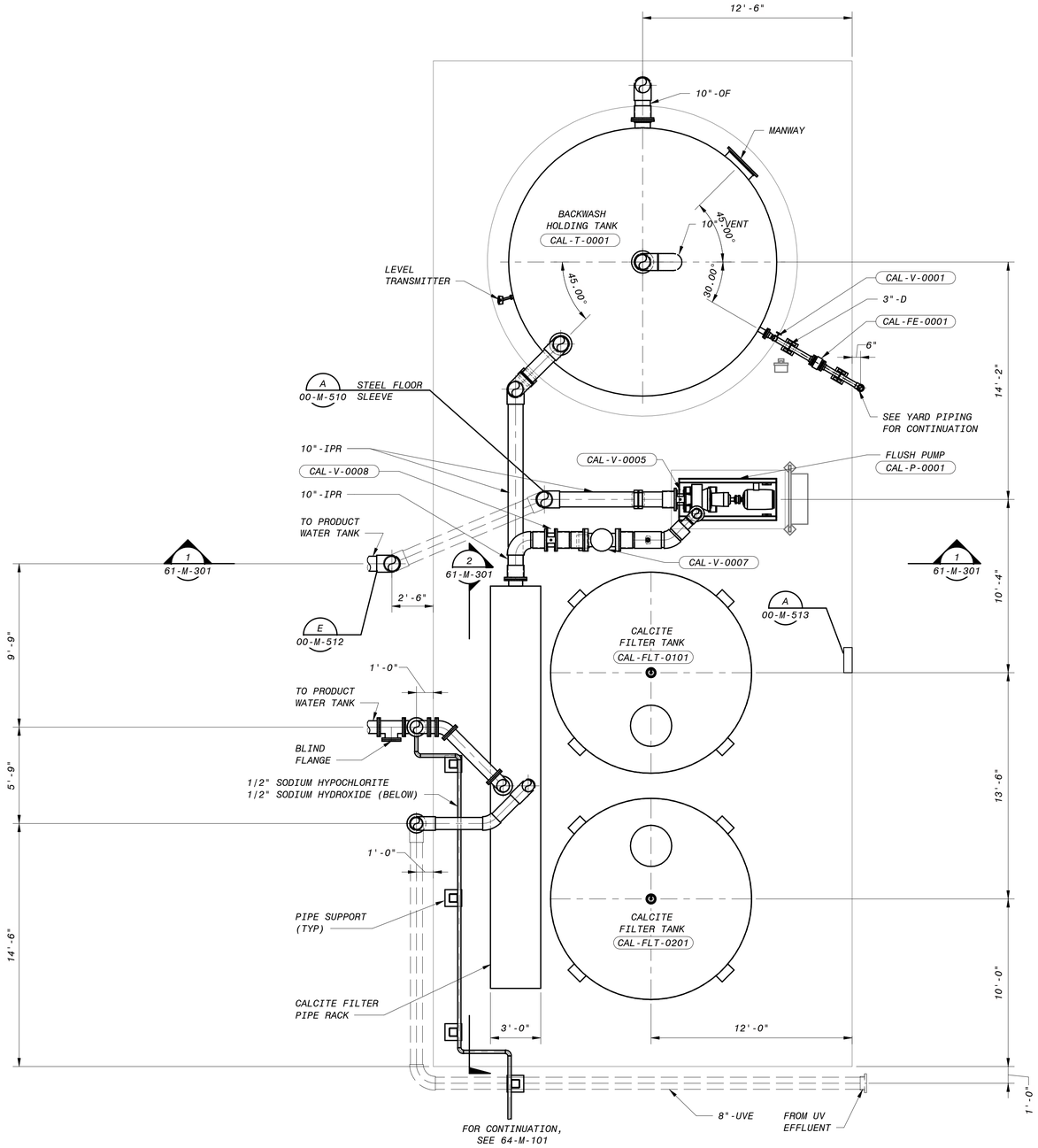

A PRODUCT WATER AREA - CALCITE CONTACTOR - PLAN

60-M-101 1/4" = 1'-0"

NOTES:

1. *PIPING CONFIGURATION WITHIN THE CALCITE CONTACTOR SKID WILL BE PROVIDED BY THE CALCITE CONTACTOR SYSTEM SUPPLIER.*
2. *PIPING SHOWN GOING TO AND FROM THE EQUIPMENT PAD SHALL BE COORDINATED WITH RECEIPT OF CALCITE CONTACTOR SUBMITTALS.*
3. *NOTE THE EQUIPMENT SHOWN WITHIN THE EQUIPMENT PAD IS NOT FINAL. FINAL DRAWINGS WILL PROVIDED WHEN EQUIPMENT IS PROCURED.*
4. *EQUIPMENT SHOWN REPRESENTS THE AVAILABLE SPACE FOR THE CALCITE CONTACTOR.*

4' 2' 0' 4' 8'

1/4" = 1'-0"

90% SUBMITTAL - NOT FOR CONSTRUCTION

NO.	BY	CHK	APP	DATE	REVISIONS AND RECORD OF USE
C	KEZ	RWF	EVB	3/31/2020	90% SUBMITTAL
B	KEZ	RT	EVB	7/30/2019	60% SUBMITTAL
A	KEZ	RWF	EVB	3/5/2019	30% SUBMITTAL

REGISTERED PROFESSIONAL ENGINEER
ERICK V. BEVINGTON
No. C 78836
CIVIL
STATE OF CALIFORNIA

BLACK & VEATCH JOINT VENTURE
BLACK & VEATCH
FILANC

CITY OF MORRO BAY
MORRO BAY WATER RECLAMATION FACILITY (WRF)

PRODUCT WATER AREA - CALCITE CONTACTOR
CIVIL-MECHANICAL
PLAN

DESIGNED: KEZ, EVB
DETAILED: MAK
CHECKED:
APPROVED:
DATE:

0 1/2 1
IF THIS BAR DOES NOT MEASURE 1" THEN DRAWING IS NOT TO FULL SCALE

PROJECT NO. 400530

61-M-101
SHEET OF

PLOTTED: 3/24/2020 12:58:30 PM
D400530

NOTES:

1. PIPING CONFIGURATION WITHIN THE CALCITE CONTACTOR SYSTEM WILL BE PROVIDED BY THE CALCITE SYSTEM SUPPLIER (CSS). DIMENSIONS AND ELEVATIONS SHOWN ARE APPROXIMATE. CONTRACTOR SHALL COORDINATE WITH THE CSS ON THE FINAL FOOTPRINT AND LAYOUT OF THE CALCITE CONTACTOR SYSTEM.

2. PIPING SHOWN GOING TO AND FROM THE EQUIPMENT PAD SHALL BE COORDINATED.

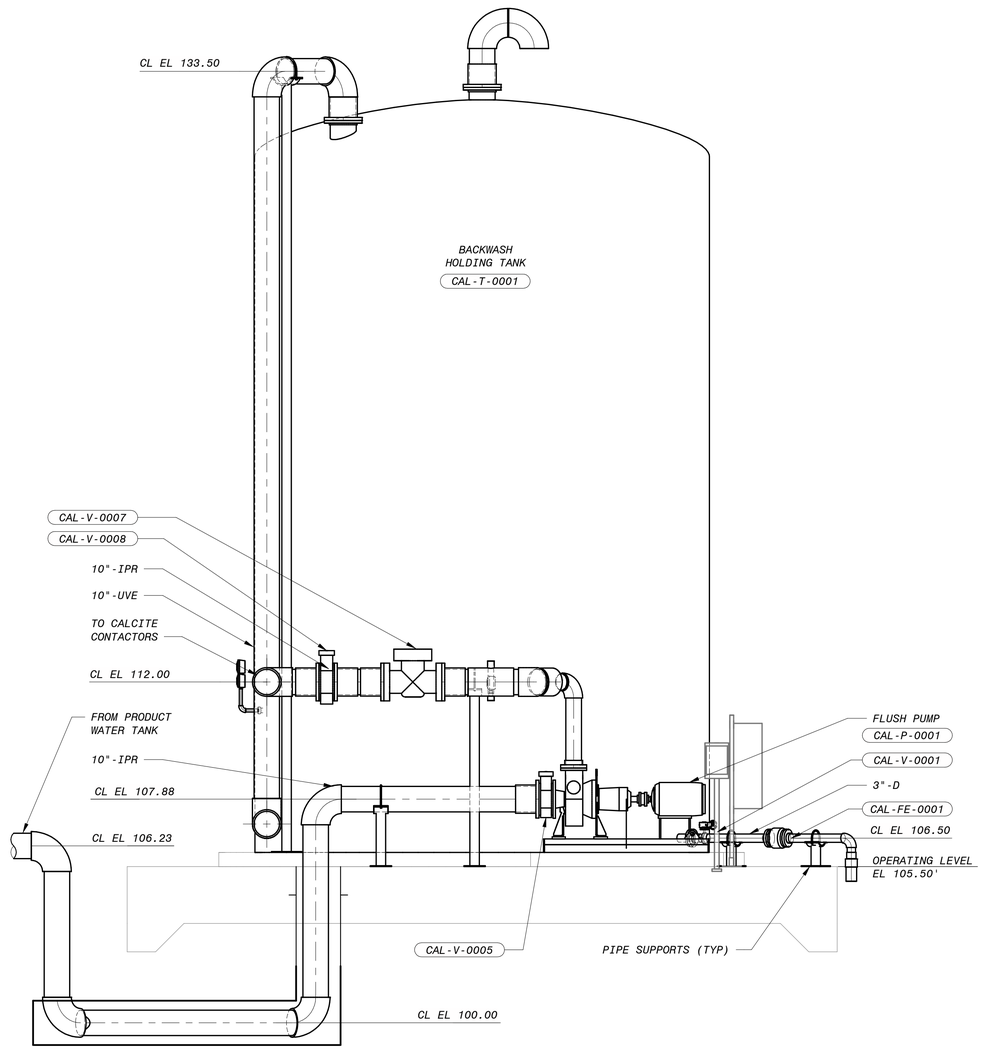

1 SECTION
61-M-101 3/8" = 1'-0"

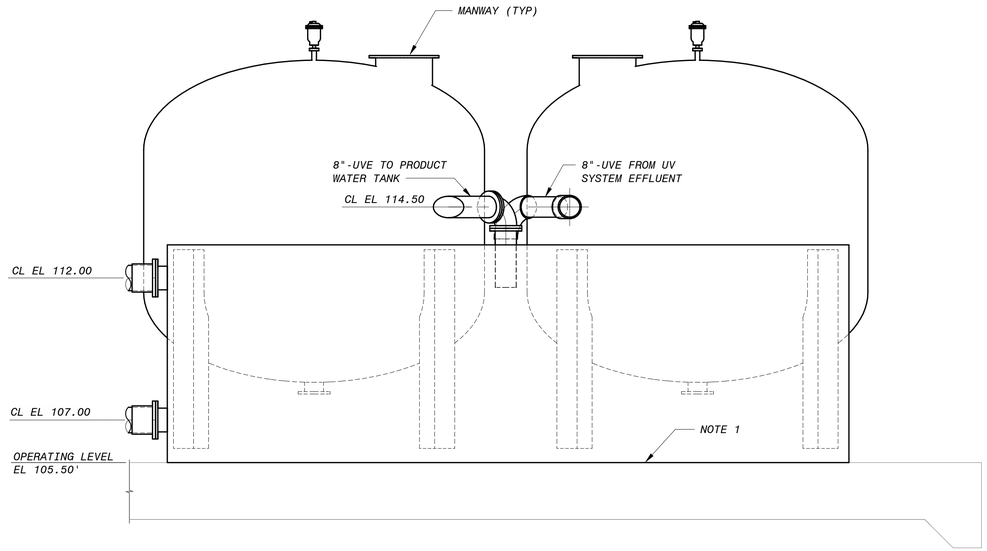

2 SECTION
61-M-101 3/8" = 1'-0"

12" 0' 1' 2' 3' 4' 5' 6' 7'
3/8" = 1'-0"

90% SUBMITTAL- NOT FOR CONSTRUCTION

NO.	BY	CHK	APP	DATE	REVISIONS AND RECORD OF USE
C	KEZ	RWF	EVB	3/31/2020	90% SUBMITTAL
B	KEZ	RT	EVB	7/30/2019	60% SUBMITTAL
A	KEZ	RWF	EVB	3/5/2019	30% SUBMITTAL

REGISTERED PROFESSIONAL ENGINEER
ERICK V. BEVINGTON
No. C 78836
CIVIL
STATE OF CALIFORNIA

BLACK & VEATCH
JOINT VENTURE
BLACK & VEATCH
FILANC

CITY OF MORRO BAY
MORRO BAY WATER
RECLAMATION FACILITY (WRF)

PRODUCT WATER AREA - CALCITE CONTACTOR
CIVIL-MECHANICAL
SECTIONS AND DETAILS

DESIGNED: KEZ, EVB
DETAILED: MAK
CHECKED:
APPROVED:
DATE:

0 1/2 1
IF THIS BAR DOES NOT MEASURE 1" THEN DRAWING IS NOT TO FULL SCALE

PROJECT NO.
400530

61-M-301
SHEET
OF

PLOTTED: 3|24|2020 12:58:33 PM
D400530

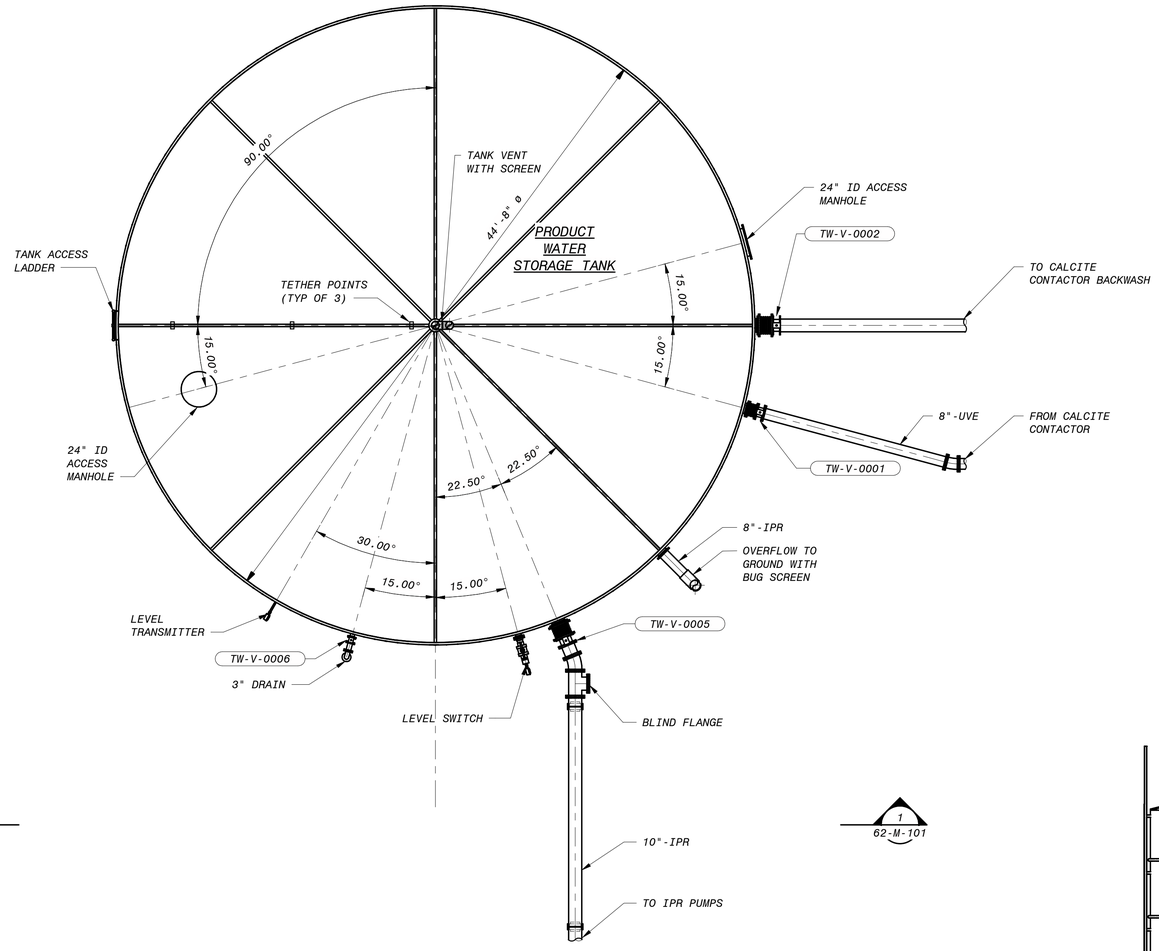

1
62-M-101

1
62-M-101

A PRODUCT WATER AREA - PRODUCT WATER STORAGE TANK - PLAN

60-M-101 3/16" = 1'-0"

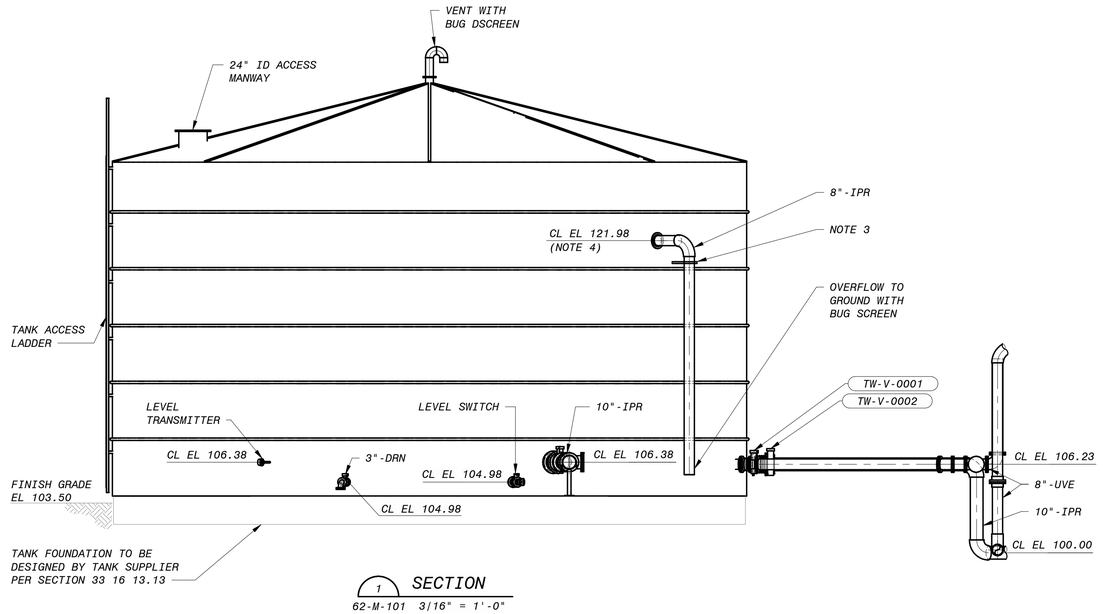

1 SECTION

62-M-101 3/16" = 1'-0"

NOTES:

1. TANK ACCESSORIES AND NOZZLE SIZES AND LOCATIONS PER NOZZLE SCHEDULE IN SECTION 33 16 13.13.
2. TANK FOUNDATION DESIGN SHALL BE COMPLETED BY THE TANK SUPPLIER PER SECTION 33 16 13.13.
3. PIPE SUPPORTS ON THE TANK SHALL BE PROVIDED BY THE SUPPLIER.
4. FINAL TANK DIAMETER AND HEIGHT WILL BE DETERMINED BY TANK SUPPLIER TO PROVIDE OPTIMAL DESIGN. THE CENTERLINE ELEVATION SHOWN ON THE DRAWINGS IS THE MAXIMUM ALLOWABLE LEVEL. THE DIAMETER OF THE TANK MAY CHANGE. OVERFLOW PIPE SIZE TO BE DETERMINED BY TANK SUPPLIER.

NO.	BY	CHK	APP	DATE	REVISIONS AND RECORD OF USE
C	KEZ	RWF	EVB	3/31/2020	90% SUBMITTAL
B	KEZ	RT	EVB	7/30/2019	60% SUBMITTAL
A	KEZ	RWF	EVB	3/5/2019	30% SUBMITTAL

REGISTERED PROFESSIONAL ENGINEER
ERICK V. BEVINGTON
No. C 78836
CIVIL
STATE OF CALIFORNIA

BLACK & VEATCH
JOINT VENTURE
BLACK & VEATCH
FILANC

CITY OF MORRO BAY
MORRO BAY WATER
RECLAMATION FACILITY (WRF)

PRODUCT WATER AREA
PRODUCT WATER STORAGE TANK
CIVIL-MECHANICAL
PLAN, SECTIONS AND DETAILS

DESIGNED: KEZ, EVB
DETAILED: RMB
CHECKED:
APPROVED:
DATE:

0 1/2 1
IF THIS BAR DOES NOT MEASURE 1" THEN DRAWING IS NOT TO FULL SCALE

PROJECT NO.
400530

62-M-101
SHEET
OF

6" 4' 2' 0' 5' 10'
3/16" = 1'-0"

90% SUBMITTAL - NOT FOR CONSTRUCTION

PLOTTED: 3/24/2020 12:58:37 PM
D400530

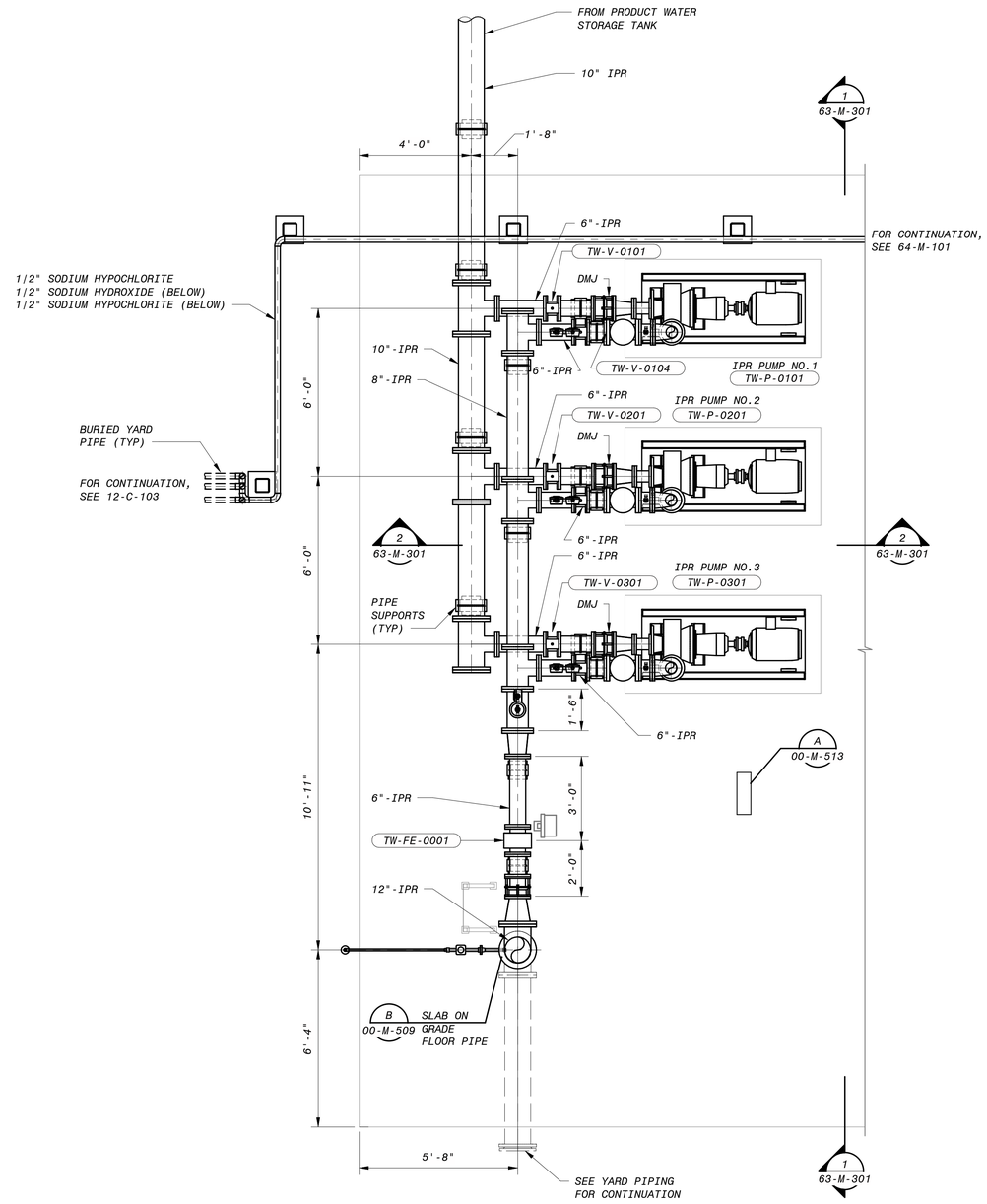

A PRODUCT WATER AREA - IPR PRODUCT WATER PUMP STATION - PLAN
60-M-101 3/8" = 1'-0"

12" 0' 1' 2' 3' 4' 5' 6' 7'
3/8" = 1'-0"

90% SUBMITTAL - NOT FOR CONSTRUCTION

NO.	BY	CHK	APP	DATE	REVISIONS AND RECORD OF USE
C	KEZ	RWF	EVB	3/31/2020	90% SUBMITTAL
B	KEZ	RT	EVB	7/30/2019	60% SUBMITTAL
A	KEZ	RWF	EVB	3/5/2019	30% SUBMITTAL

REGISTERED PROFESSIONAL ENGINEER
ERICK V. BEVINGTON
No. C 78836
CIVIL
STATE OF CALIFORNIA

BLACK & VEATCH
JOINT VENTURE
BLACK & VEATCH
FILANC

CITY OF MORRO BAY
MORRO BAY WATER
RECLAMATION FACILITY (WRF)

PRODUCT WATER AREA
IPR PRODUCT WATER PUMP STATION
CIVIL-MECHANICAL
PLAN

DESIGNED: KEZ, EVB
DETAILED: RMB
CHECKED:
APPROVED:
DATE:

0 1/2 1
IF THIS BAR DOES NOT MEASURE 1" THEN DRAWING IS NOT TO FULL SCALE

PROJECT NO.
400530

63-M-101
SHEET
OF

PLOTTED: 3/24/2020 12:58:39 PM
D400530

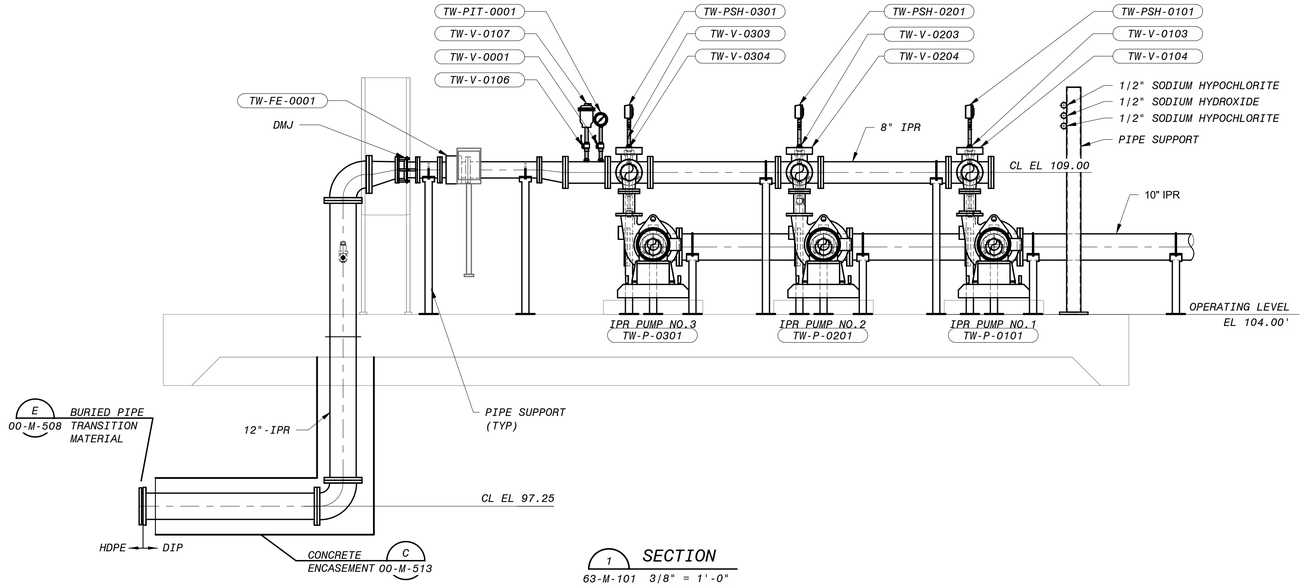

1 SECTION
63-M-101 3/8" = 1'-0"

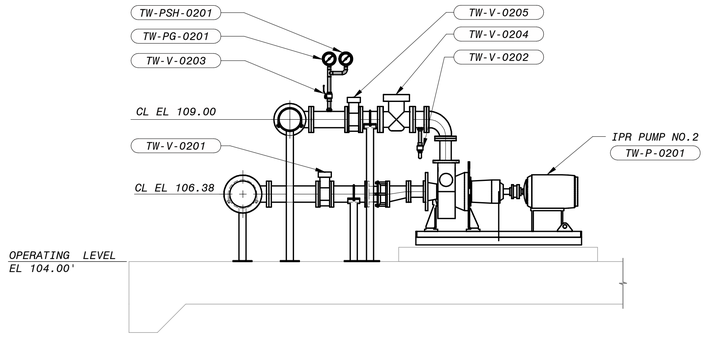

2 SECTION
63-M-101 3/8" = 1'-0"

12" 0' 1' 2' 3' 4' 5' 6' 7'
3/8" = 1'-0"

90% SUBMITTAL- NOT FOR CONSTRUCTION

NO.	BY	CHK	APP	DATE	REVISIONS AND RECORD OF USE
C	KEZ	RWF	EVB	3/31/2020	90% SUBMITTAL
B	KEZ	RT	EVB	7/30/2019	60% SUBMITTAL
A	KEZ	RWF	EVB	3/5/2019	30% SUBMITTAL

REGISTERED PROFESSIONAL ENGINEER
ERICK V. BEVINGTON
No. C 78836
CIVIL
STATE OF CALIFORNIA

BLACK & VEATCH

JOINT VENTURE

FILANC

BLACK & VEATCH

CITY OF MORRO BAY
MORRO BAY WATER
RECLAMATION FACILITY (WRF)

PRODUCT WATER AREA
IPR PRODUCT WATER PUMP STATION
CIVIL-MECHANICAL
SECTIONS AND DETAILS 1

DESIGNED: KEZ, EVB
DETAILED: RMB
CHECKED:
APPROVED:
DATE:

0 1/2 1
IF THIS BAR DOES NOT MEASURE 1" THEN DRAWING IS NOT TO FULL SCALE

PROJECT NO.
400530

63-M-301
SHEET
OF

PLOTTED: 3/24/2020 12:58:43 PM
D400530

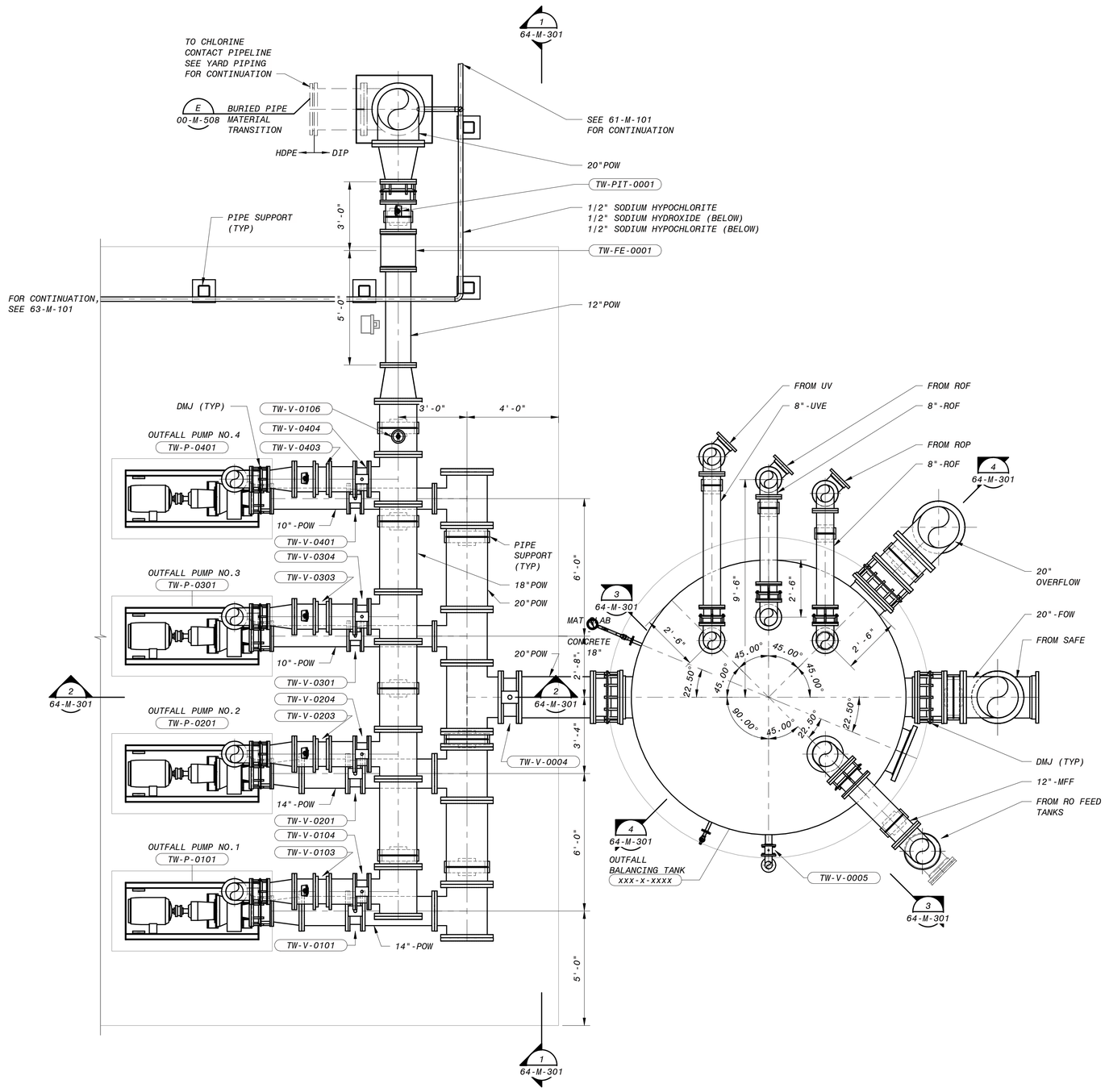

PRODUCT WATER AREA - OUTFALL PUMP STATION - PLAN

3/8" = 1'-0"

12" 0' 1' 2' 3' 4' 5' 6' 7'

3/8" = 1'-0"

90% SUBMITTAL - NOT FOR CONSTRUCTION

NO.	BY	CHK	APP	DATE	REVISIONS AND RECORD OF USE
C	KEZ	RWF	EVB	3/31/2020	90% SUBMITTAL
B	KEZ	RT	EVB	7/30/2019	60% SUBMITTAL
A	KEZ	RWF	EVB	3/5/2019	30% SUBMITTAL

REGISTERED PROFESSIONAL ENGINEER
ERICK V. BEVINGTON
No. C 78836
CIVIL
STATE OF CALIFORNIA

BLACK & VEATCH
JOINT VENTURE
BLACK & VEATCH
FILANC

CITY OF MORRO BAY
MORRO BAY WATER RECLAMATION FACILITY (WRF)

PRODUCT WATER AREA - OUTFALL PUMP STATION
CIVIL-MECHANICAL
PLAN

DESIGNED: KEZ, EVB
DETAILED: RMB
CHECKED:
APPROVED:
DATE:

0 1/2 1
IF THIS BAR DOES NOT MEASURE 1" THEN DRAWING IS NOT TO FULL SCALE

PROJECT NO.
400530

64-M-101
SHEET
OF

PLOTTED: 3/24/2020 12:58:47 PM
D400530

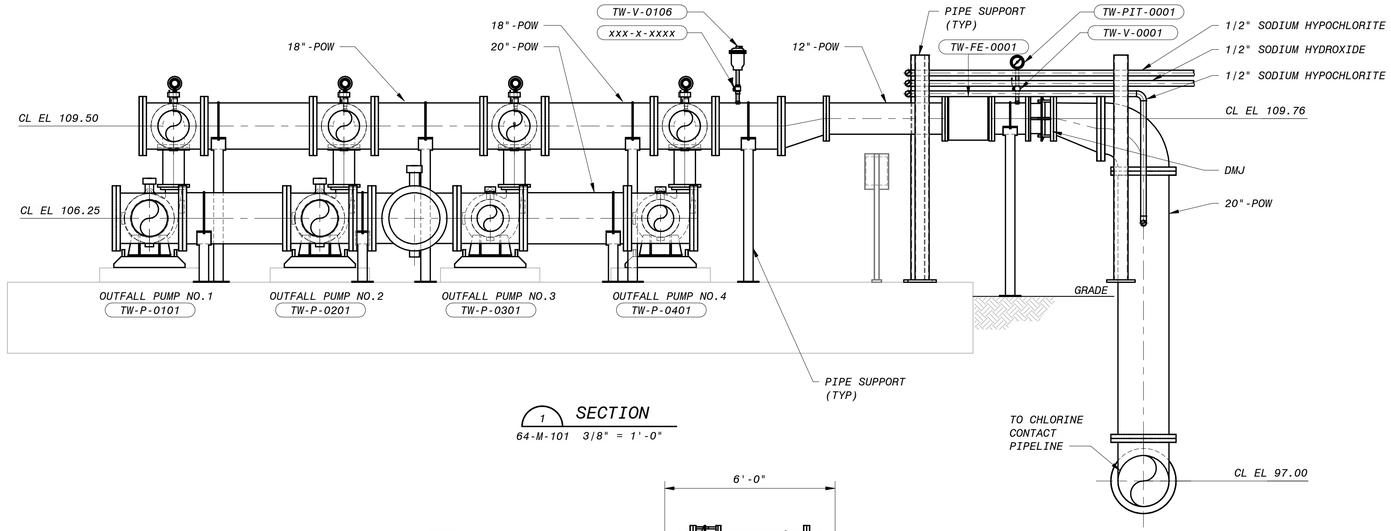

1 SECTION
64-M-101 3/8" = 1'-0"

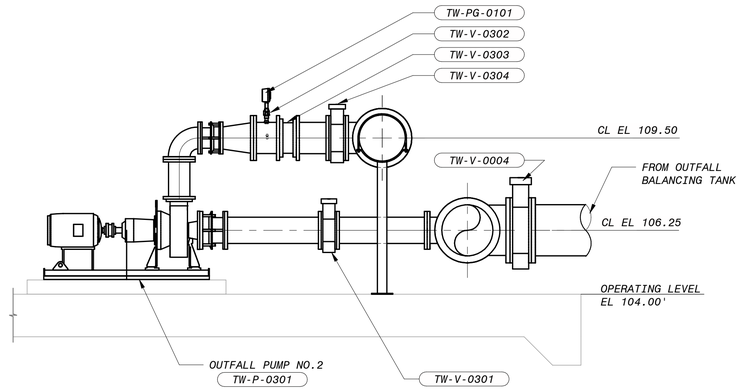

2 SECTION
64-M-101 3/8" = 1'-0"

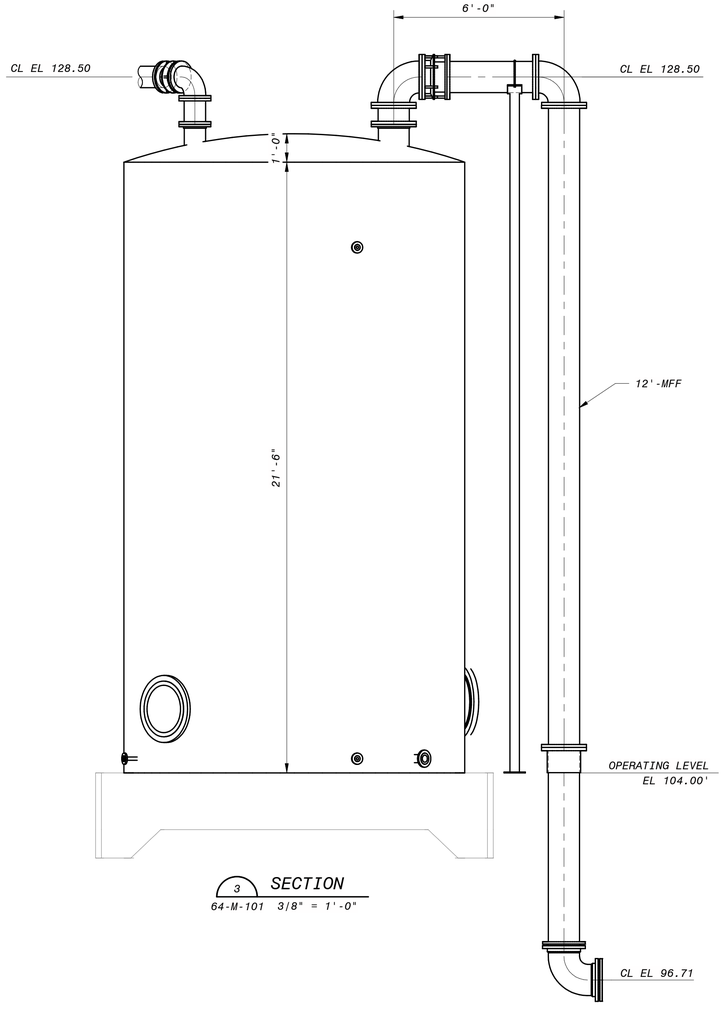

3 SECTION
64-M-101 3/8" = 1'-0"

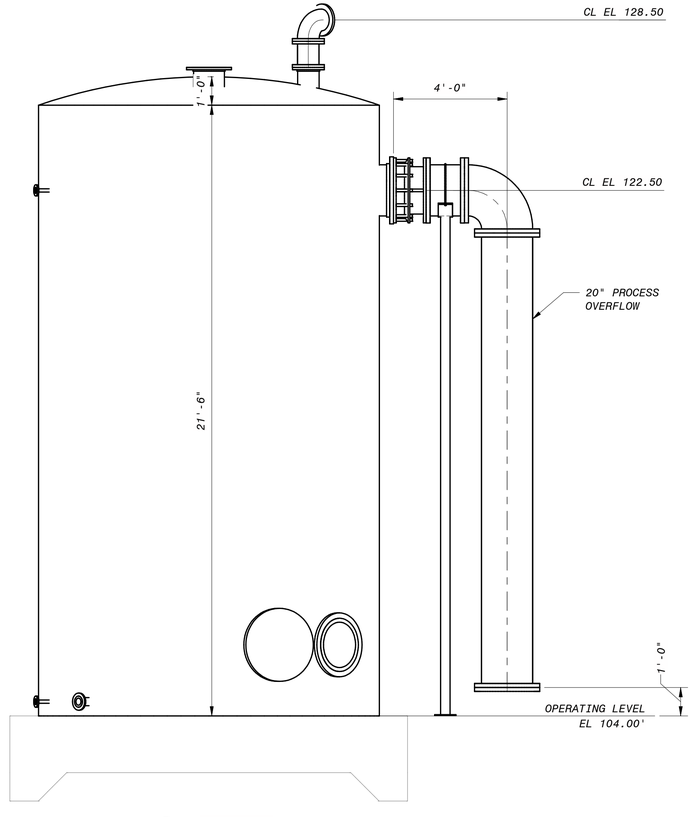

4 SECTION
64-M-101 3/8" = 1'-0"

12" 0' 1' 2' 3' 4' 5' 6' 7'
3/8" = 1'-0"

90% SUBMITTAL- NOT FOR CONSTRUCTION

NO.	BY	CHK	APP	DATE	REVISIONS AND RECORD OF USE
C	KEZ	RWF	EVB	3/31/2020	90% SUBMITTAL
B	KEZ	RT	EVB	7/30/2019	60% SUBMITTAL
A	KEZ	RWF	EVB	3/5/2019	30% SUBMITTAL

REGISTERED PROFESSIONAL ENGINEER
ERICK V. BEVINGTON
No. C 78836
CIVIL
STATE OF CALIFORNIA

BLACK & VEATCH
JOINT VENTURE
BLACK&VEATCH
FILANC

CITY OF MORRO BAY
MORRO BAY WATER RECLAMATION FACILITY (WRF)

PRODUCT WATER AREA - OUTFALL PUMP STATION
CIVIL-MECHANICAL
SECTIONS AND DETAILS 1

DESIGNED: KEZ, EVB
DETAILED: RMB
CHECKED:
APPROVED:
DATE:

0 1/2 1
IF THIS BAR DOES NOT MEASURE 1" THEN DRAWING IS NOT TO FULL SCALE

PROJECT NO.
400530

64-M-301
SHEET
OF

PLOTTED: 3/24/2020 12:59:51 PM
D400530

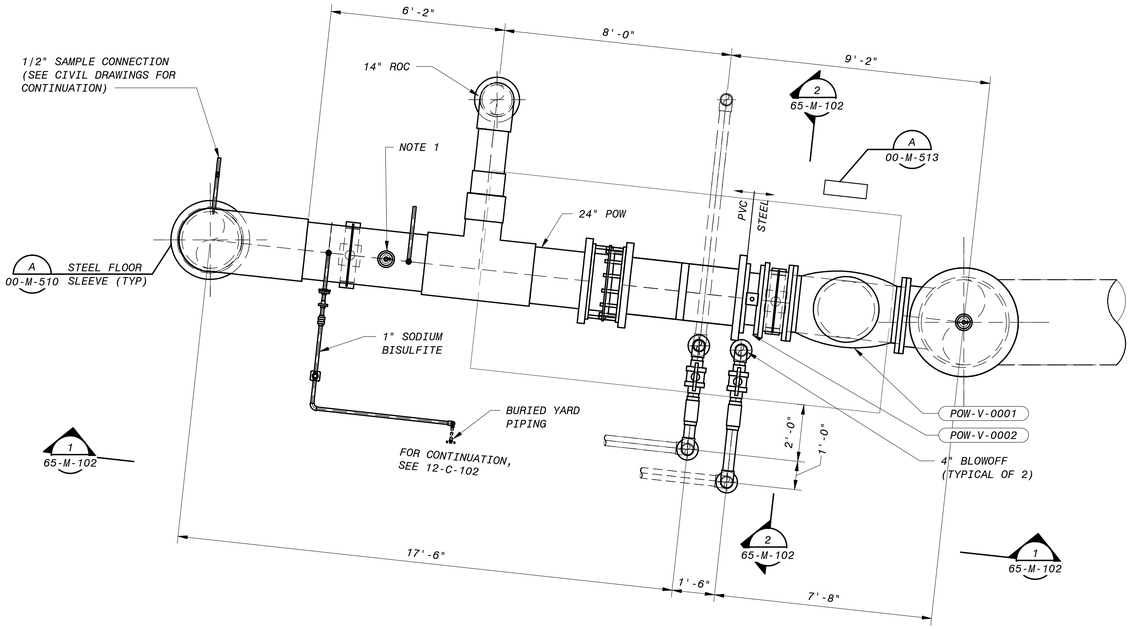

PRODUCT WATER AREA - DECHLORINATION FACILITY - PLAN

3/8" = 1'-0"

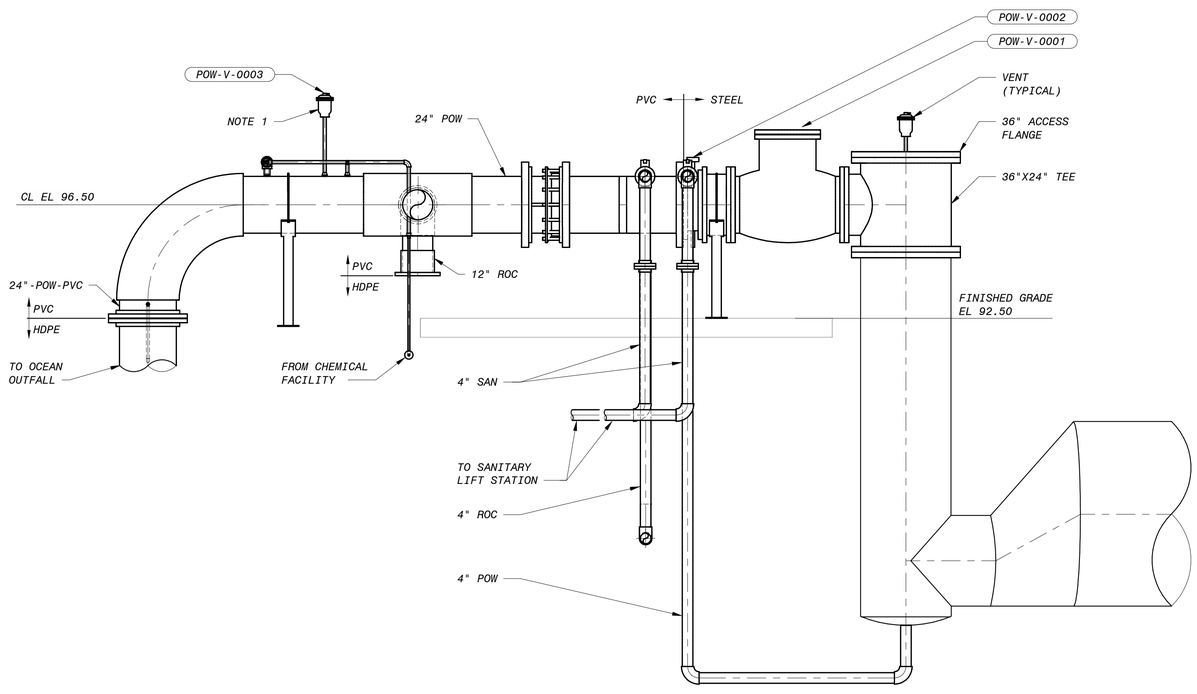

1 SECTION

65-M-102 3/8" = 1'-0"

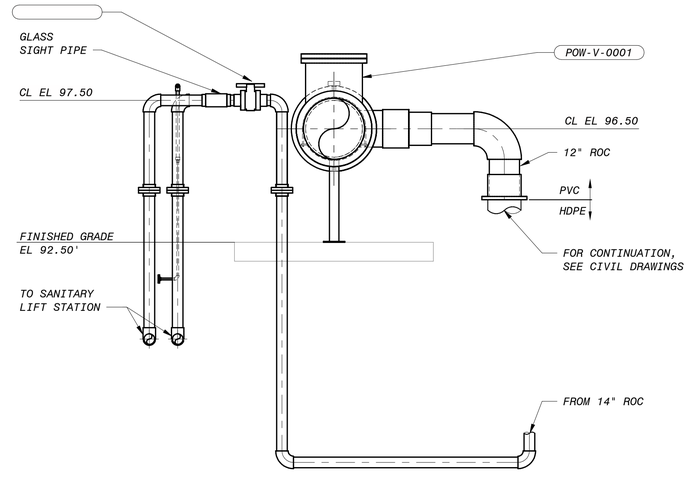

2 SECTION

65-M-102 3/8" = 1'-0"

NOTES:

1. VALVE SWHALL BE 3" VENT TECH MODEL SWG.
2. DECHLORINATION STATION IS LOCATED NEAR THE OPERATIONS BUILDING AND THE WATER AND COLLECTIONS STORAGE SHED. SEE CIVIL SITE PLANS FOR EXACT LOCATION.

12" 0' 1' 2' 3' 4' 5' 6' 7'

3/8" = 1'-0"

90% SUBMITTAL- NOT FOR CONSTRUCTION

NO.	BY	CHK	APP	DATE	REVISIONS AND RECORD OF USE
C	KEZ	RWF	EVB	3/31/2020	90% SUBMITTAL
B	KEZ	RT	EVB	7/30/2019	60% SUBMITTAL

REGISTERED PROFESSIONAL ENGINEER
ERICK V. BEVINGTON
No. C 78836
CIVIL
STATE OF CALIFORNIA

BLACK & VEATCH

JOINT VENTURE

FILANC

CITY OF MORRO BAY
MORRO BAY WATER RECLAMATION FACILITY (WRF)

PRODUCT WATER AREA DECHLORINATION FACILITY CIVIL-MECHANICAL PLAN, SECTIONS AND DETAILS

DESIGNED: KEZ, EVB
DETAILED: RWB
CHECKED: Checker
APPROVED: Approver
DATE:

0 1/2 1

IF THIS BAR DOES NOT MEASURE 1" THEN DRAWING IS NOT TO FULL SCALE

PROJECT NO. 400530

65-M-102 SHEET OF

PLOTTED: 3/24/2020 12:59:53 PM

D400530

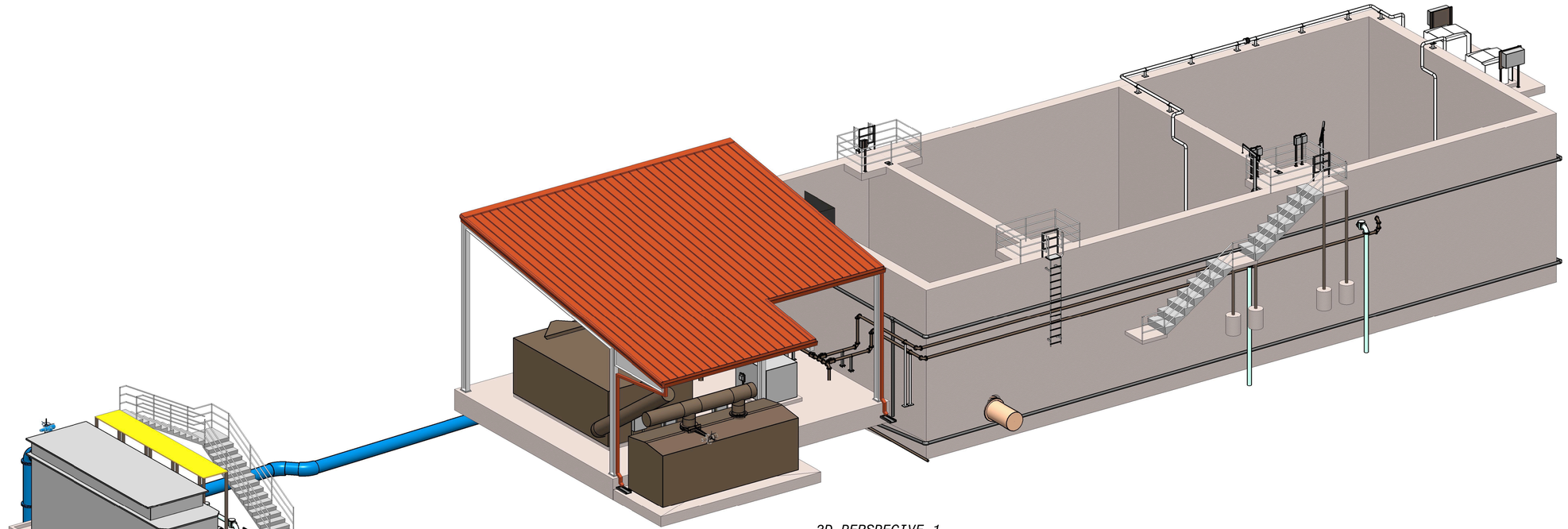

3D PERSPECIVE 1

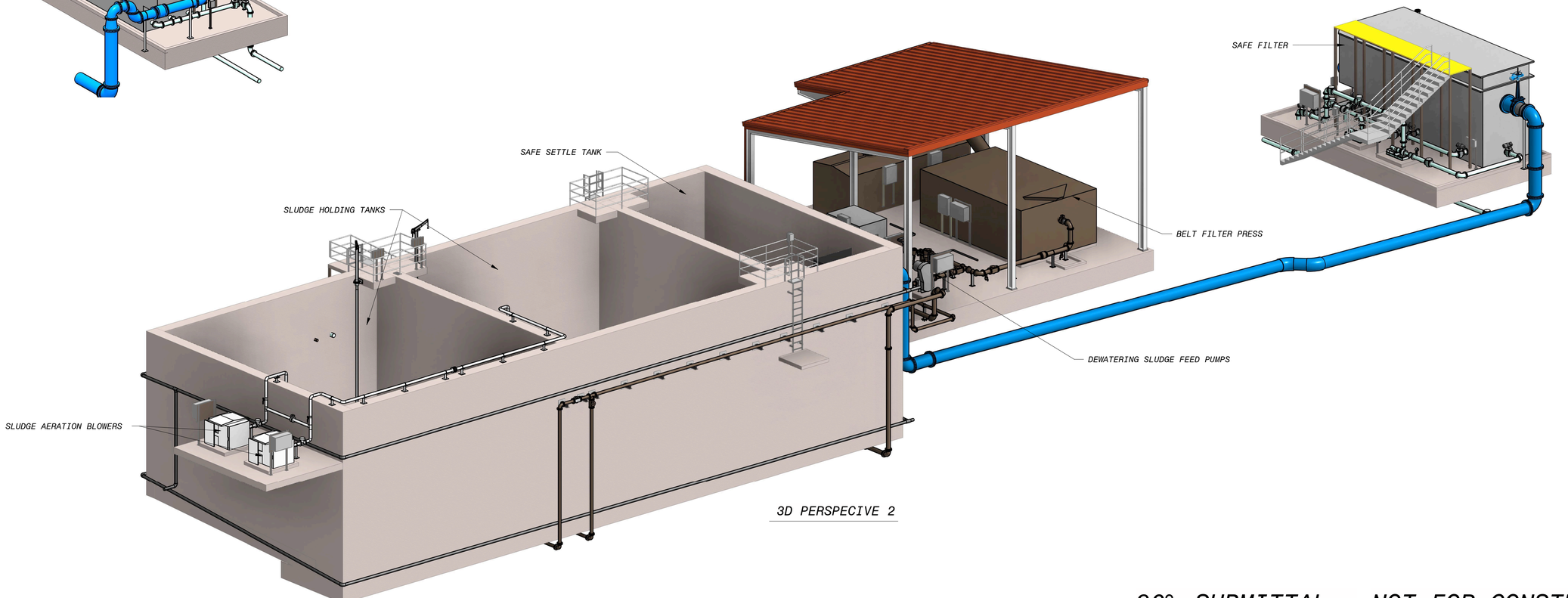

3D PERSPECIVE 2

90% SUBMITTAL - NOT FOR CONSTRUCTION

NO.	BY	CHK	APP	DATE	REVISIONS AND RECORD OF USE
C	KEZ	RWF	EVB	3/31/2020	90% SUBMITTAL
B	KEZ	RT	EVB	7/30/2019	60% SUBMITTAL
A	KEZ	RWF	EVB	3/5/2019	30% SUBMITTAL

REGISTERED PROFESSIONAL ENGINEER
ERICK V. BEVINGTON
No. C 78836
CIVIL
STATE OF CALIFORNIA

BLACK & VEATCH
JOINT VENTURE
BLACK & VEATCH
FILANC

CITY OF MORRO BAY
MORRO BAY WATER
RECLAMATION FACILITY (WRF)

RESIDUALS AREA - OVERALL
CIVIL-MECHANICAL
3D VIEWS

DESIGNED: KEZ
DETAILED: MAK
CHECKED:
APPROVED:
DATE:

0 1/2 1
IF THIS BAR DOES NOT MEASURE 1" THEN DRAWING IS NOT TO FULL SCALE

PROJECT NO.
400530

70-M-001
SHEET
OF

PLOTTED: 3|26|2020 11:01:41 AM
D400530

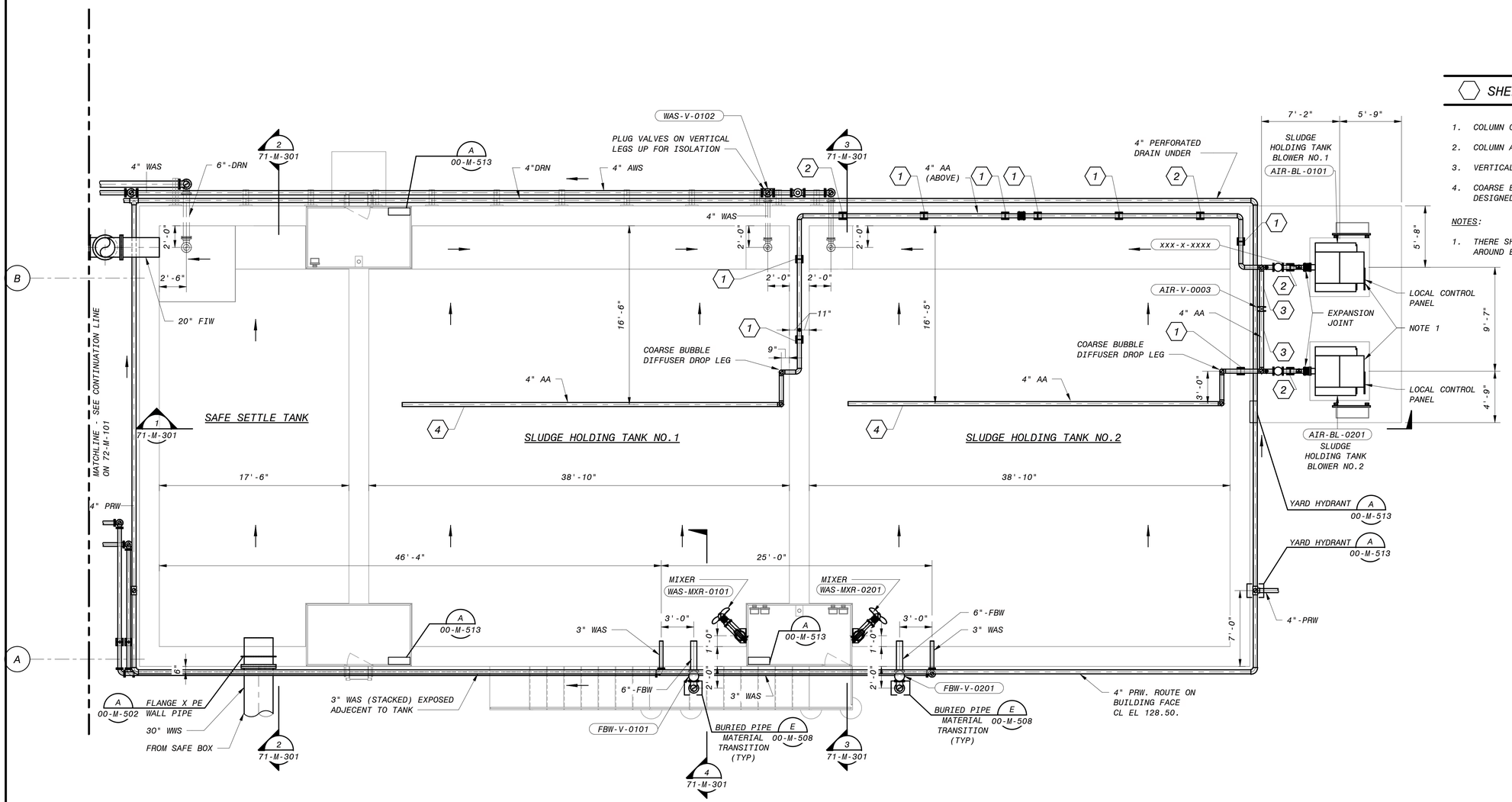

OPERATING FLOOR PLAN

3/16" = 1'-0"

SHEET KEYNOTES

1. COLUMN GUIDE SUPPORT. SEE DETAIL A ON 00-S-202
2. COLUMN AXIAL STOP SUPPORT. SEE DETAIL A/00-S-202
3. VERTICAL PIPE GUIDE SUPPORT. SEE DETAIL E/00-S-202
4. COARSE BUBBLE DIFFUSER HEADER AND SUPPORT TO BE DESIGNED BY COARSE BUBBLE DIFFUSER SUPPLIER.

NOTES:

1. THERE SHALL BE A MINIMUM OF 3'-6" OF CLEARANCE AROUND EACH CONTROL PANEL.

NO.	BY	CHK	APP	DATE	REVISIONS AND RECORD OF USE
C	KEZ	RWF	EVB	3/31/2020	90% SUBMITTAL
B	KEZ	RT	EVB	7/30/2019	60% SUBMITTAL
A	KEZ	RWF	EVB	3/5/2019	30% SUBMITTAL

REGISTERED PROFESSIONAL ENGINEER
ERICK V. BEVINGTON
No. C 78836
CIVIL
STATE OF CALIFORNIA

BLACK & VEATCH JOINT VENTURE
BLACK & VEATCH
FILANC

CITY OF MORRO BAY
MORRO BAY WATER RECLAMATION FACILITY (WRF)

RESIDUALS AREA - SLUDGE HOLDING TANKS AND SAFE SETTLE TANKS
CIVIL-MECHANICAL
OPERATING LEVEL PLAN

DESIGNED: KEZ
DETAILED: MAK
CHECKED:
APPROVED:
DATE:

0 1/2 1
IF THIS BAR DOES NOT MEASURE 1" THEN DRAWING IS NOT TO FULL SCALE

PROJECT NO. 400530

71-M-101
SHEET
OF

6" 4' 2' 0' 5' 10'
3/16" = 1'-0"

90% SUBMITTAL - NOT FOR CONSTRUCTION

PLOTTED: 3|26|2020 11:01:45 AM
D400530

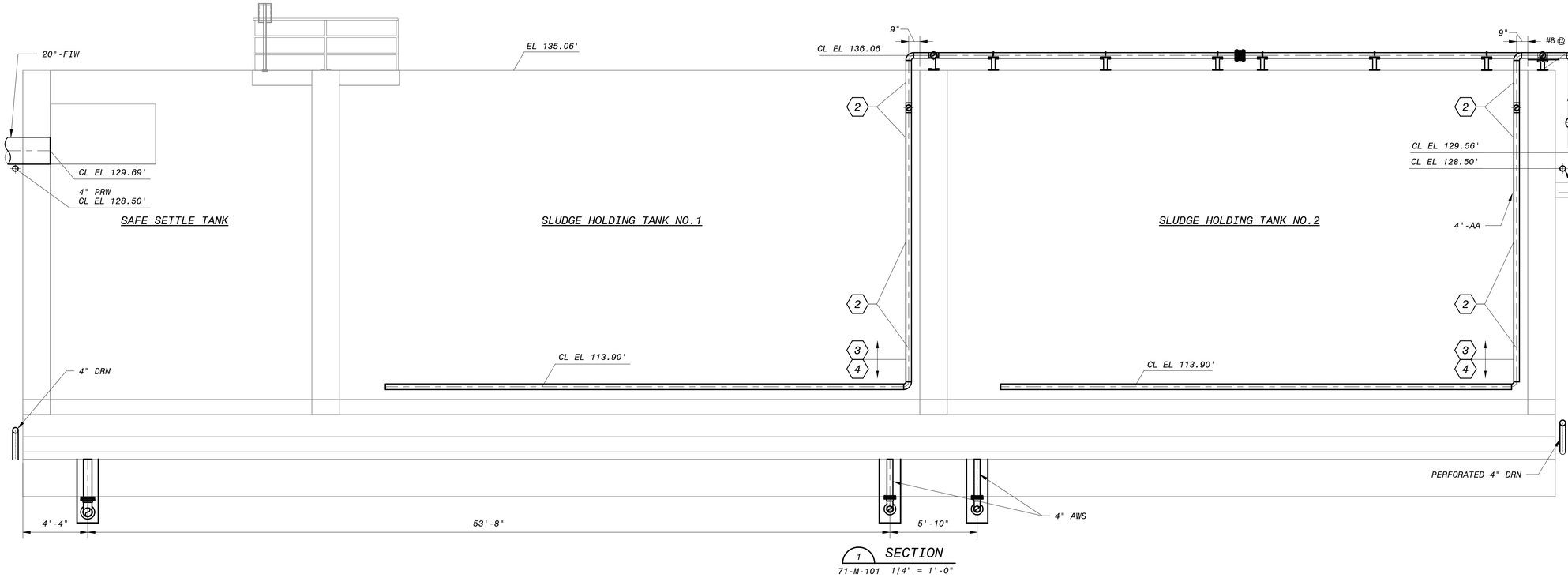

1 SECTION
71-M-101 1/4" = 1'-0"

KEY NOTES:

1. NOT USED
2. VERTICAL PIPE GUIDE SUPPORT. SEE DETAIL E ON 00-S-502.
3. PIPING PROVIDED BY DESIGN-BUILDER.
4. ELBOW AND DIFFUSER HEADER PROVIDED BY COARSE BUBBLE DIFFUSER SUPPLIER.

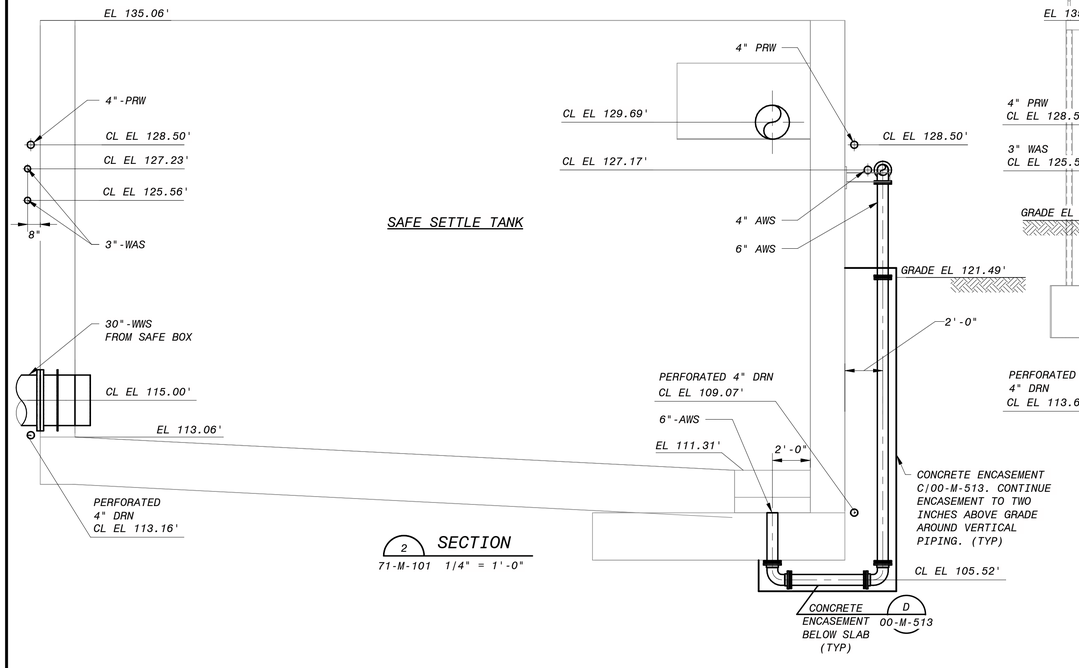

2 SECTION
71-M-101 1/4" = 1'-0"

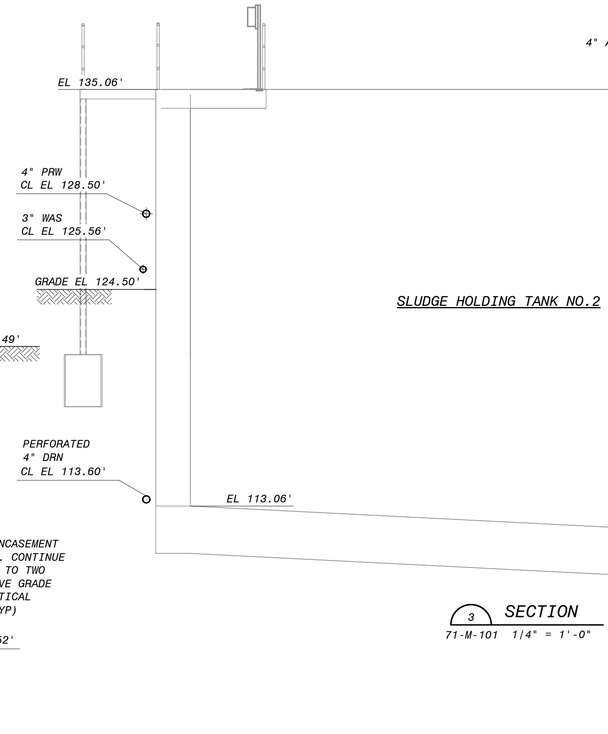

3 SECTION
71-M-101 1/4" = 1'-0"

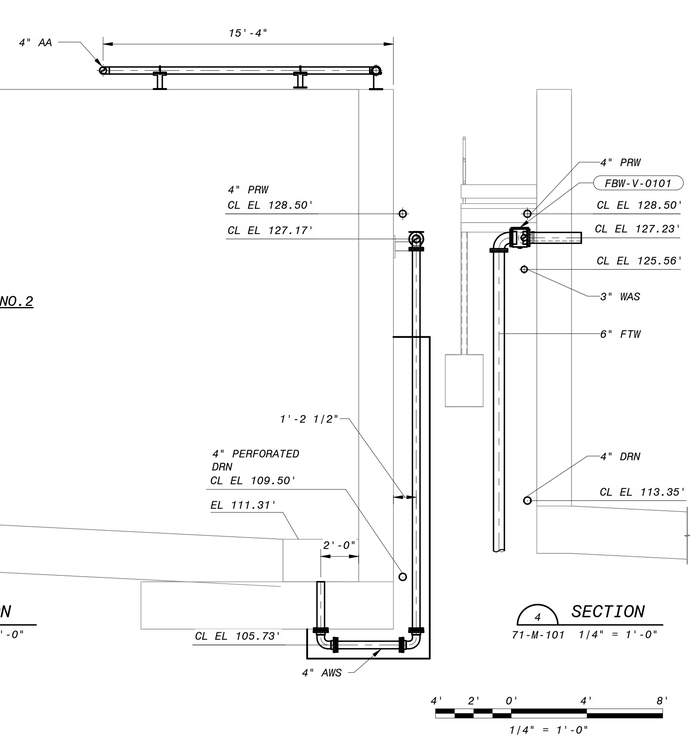

4 SECTION
71-M-101 1/4" = 1'-0"

4' 2' 0' 4' 8'
1/4" = 1'-0"

90% SUBMITTAL - NOT FOR CONSTRUCTION

NO.	BY	CHK	APP	DATE	REVISIONS AND RECORD OF USE
C	KEZ	RWF	EVB	3/31/2020	90% SUBMITTAL
B	KEZ	RT	EVB	7/30/2019	60% SUBMITTAL
A	KEZ	RWF	EVB	3/5/2019	30% SUBMITTAL

REGISTERED PROFESSIONAL ENGINEER
ERICK V. BEVINGTON
No. C 78836
STATE OF CALIFORNIA
CIVIL

BLACK & VEATCH
JOINT VENTURE
FILANC

CITY OF MORRO BAY
MORRO BAY WATER
RECLAMATION FACILITY (WRF)

RESIDUALS AREA - SLUDGE HOLDING TANKS AND SAFE SETTLE TANKS
CIVIL-MECHANICAL
SECTIONS & DETAILS 1

DESIGNED: KEZ
DETAILED: MAK
CHECKED:
APPROVED:
DATE:

0 1/2 1
IF THIS BAR DOES NOT MEASURE 1" THEN DRAWING IS NOT TO FULL SCALE

PROJECT NO.
400530

71-M-301
SHEET
OF

PLOTTED: 3/26/2020 11:01:48 AM
D400530

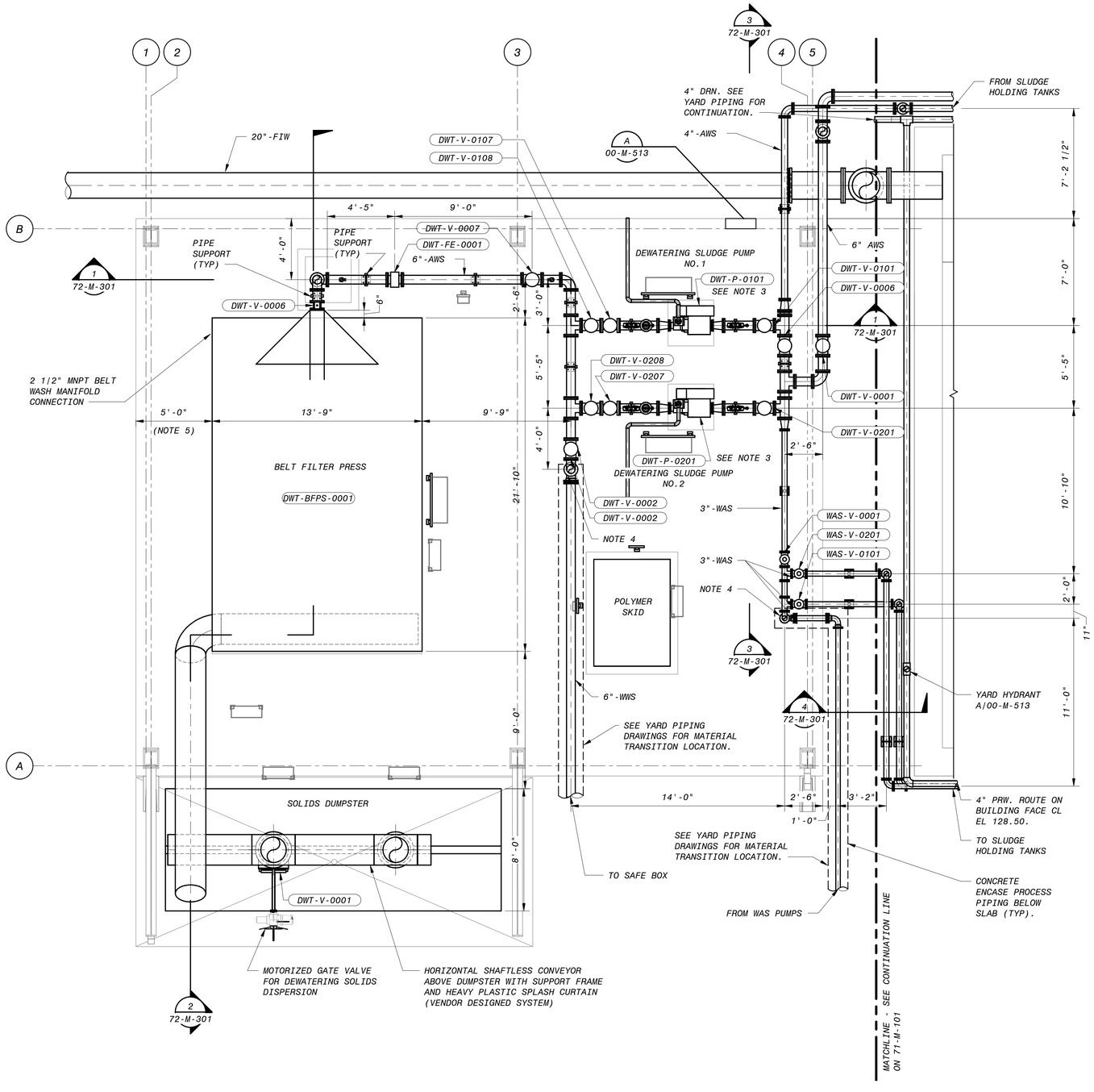

OPERATING FLOOR PLAN

1/4" = 1'-0"

NOTES:

1. EXACT LOCATION FOR THE FLOOR DRAIN CONNECTION AT THE BELT FILTER PRESS TO BE CONFIRMED.
2. SEAL WATER STATION AS REQUIRED.
3. EXACT DEWATERING PUMP LAYOUT TO BE CONFIRMED WITH VENDOR.
4. SLAB ON GRADE FLOOR PIPE FOR METALLIC PIPING. PROVIDE INSULATING FLANGE ABOVE SLAB. B/M-00-509.
5. THERE SHALL BE A MINIMUM OF 5'-0" CLEAR SPACE FROM THE EDGE OF CONCRETE ON THE SOUTH AND WEST SIDES OF THE BELT FILTER PRESS. TO BE FINALIZED WITH BELT FILTER PRESS SHOP DRAWINGS.

NO.	BY	CHK	APP	DATE	REVISIONS AND RECORD OF USE
C	KEZ	RWF	EVB	3/31/2020	90% SUBMITTAL
B	KEZ	RT	EVB	7/30/2019	60% SUBMITTAL
A	KEZ	RWF	EVB	3/5/2019	30% SUBMITTAL

REGISTERED PROFESSIONAL ENGINEER
ERICK V. BEVINGTON
No. C 78836
CIVIL
STATE OF CALIFORNIA

BLACK & VEATCH

JOINT VENTURE

BLACK & VEATCH

FILANC

CITY OF MORRO BAY
MORRO BAY WATER RECLAMATION FACILITY (WRF)

RESIDUALS AREA - DEWATERING FACILITY
CIVIL-MECHANICAL
PLAN

DESIGNED: KEZ
DETAILED: MAK
CHECKED:
APPROVED:
DATE:

0 1/2 1
IF THIS BAR DOES NOT MEASURE 1" THEN DRAWING IS NOT TO FULL SCALE

PROJECT NO.
400530

72-M-101
SHEET
OF

4' 2' 0' 4' 8'
1/4" = 1'-0"

90% SUBMITTAL - NOT FOR CONSTRUCTION

PLOTTED: 3/26/2020 11:01:51 AM
D400530

NOTES:

1. FLOOR DRAIN LOCATIONS ARE SHOWN ON THE PLUMBING DRAWING 72-P-101.
2. SEAL WATER STATION AS REQUIRED.
3. EXACT DEWATERING PUMP LAYOUT TO BE CONFIRMED WITH VENDOR.

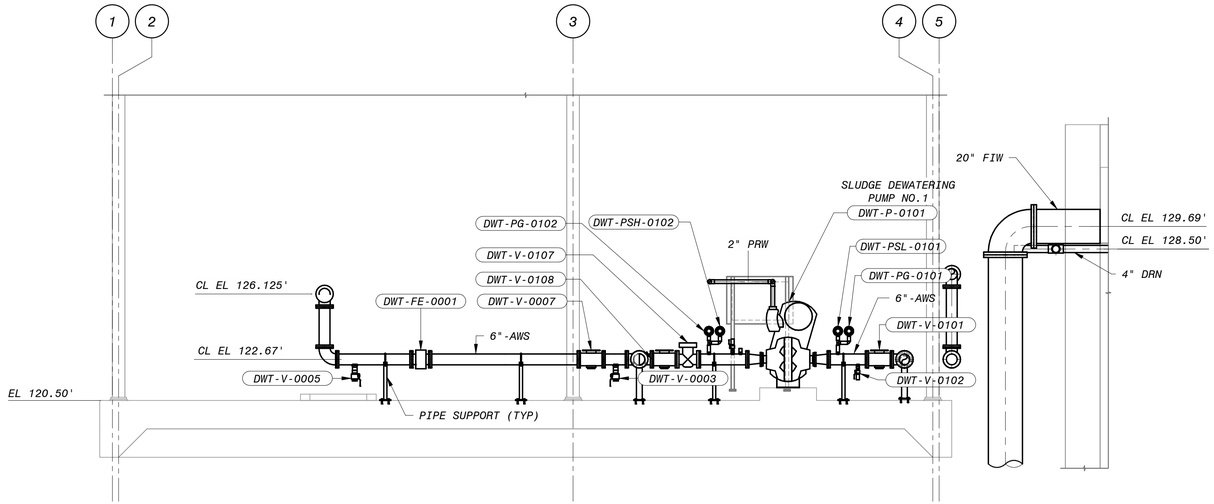

1 SECTION
72-M-101 1/4" = 1'-0"

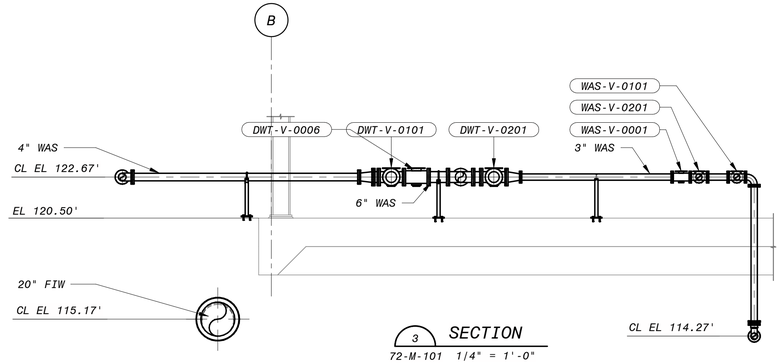

3 SECTION
72-M-101 1/4" = 1'-0"

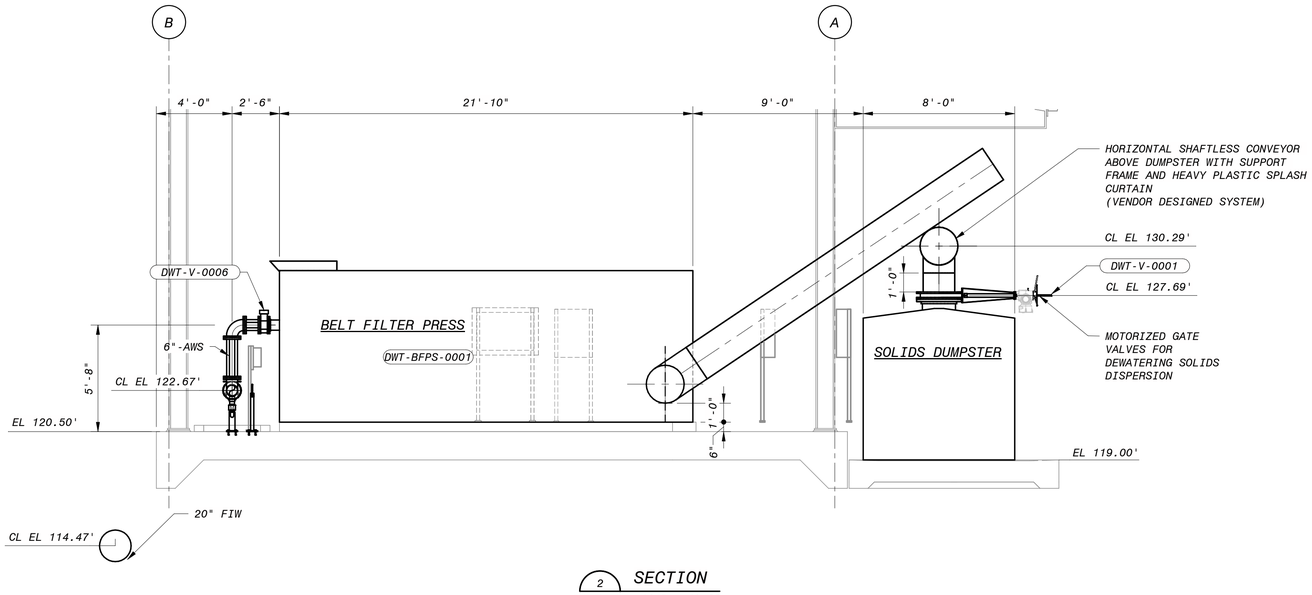

2 SECTION
72-M-101 1/4" = 1'-0"

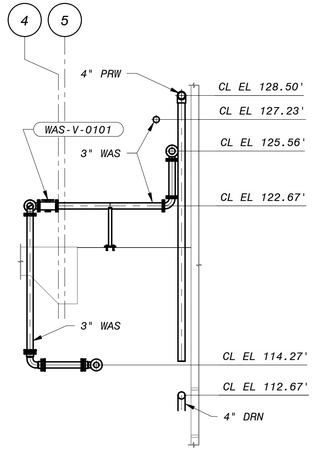

4 SECTION
72-M-101 1/4" = 1'-0"

4' 2' 0' 4' 8'
1/4" = 1'-0"

90% SUBMITTAL - NOT FOR CONSTRUCTION

NO.	BY	CHK	APP	DATE	REVISIONS AND RECORD OF USE
C	KEZ	RWF	EVB	3/31/2020	90% SUBMITTAL
B	KEZ	RT	EVB	7/30/2019	60% SUBMITTAL
A	KEZ	RWF	EVB	3/5/2019	30% SUBMITTAL

REGISTERED PROFESSIONAL ENGINEER
ERICK V. BEVINGTON
No. C 78836
STATE OF CALIFORNIA
CIVIL

BLACK & VEATCH
JOINT VENTURE
FILANC
BLACK & VEATCH

CITY OF MORRO BAY
MORRO BAY WATER
RECLAMATION FACILITY (WRF)

RESIDUALS AREA - DEWATERING FACILITY
CIVIL-MECHANICAL
SECTIONS & DETAILS 1

DESIGNED: KEZ
DETAILED: MAK
CHECKED:
APPROVED:
DATE:

0 1/2 1
IF THIS BAR DOES NOT MEASURE 1" THEN DRAWING IS NOT TO FULL SCALE

PROJECT NO.
400530

72-M-301
SHEET
OF

PLOTTED: 3/26/2020 11:01:55 AM
D400530

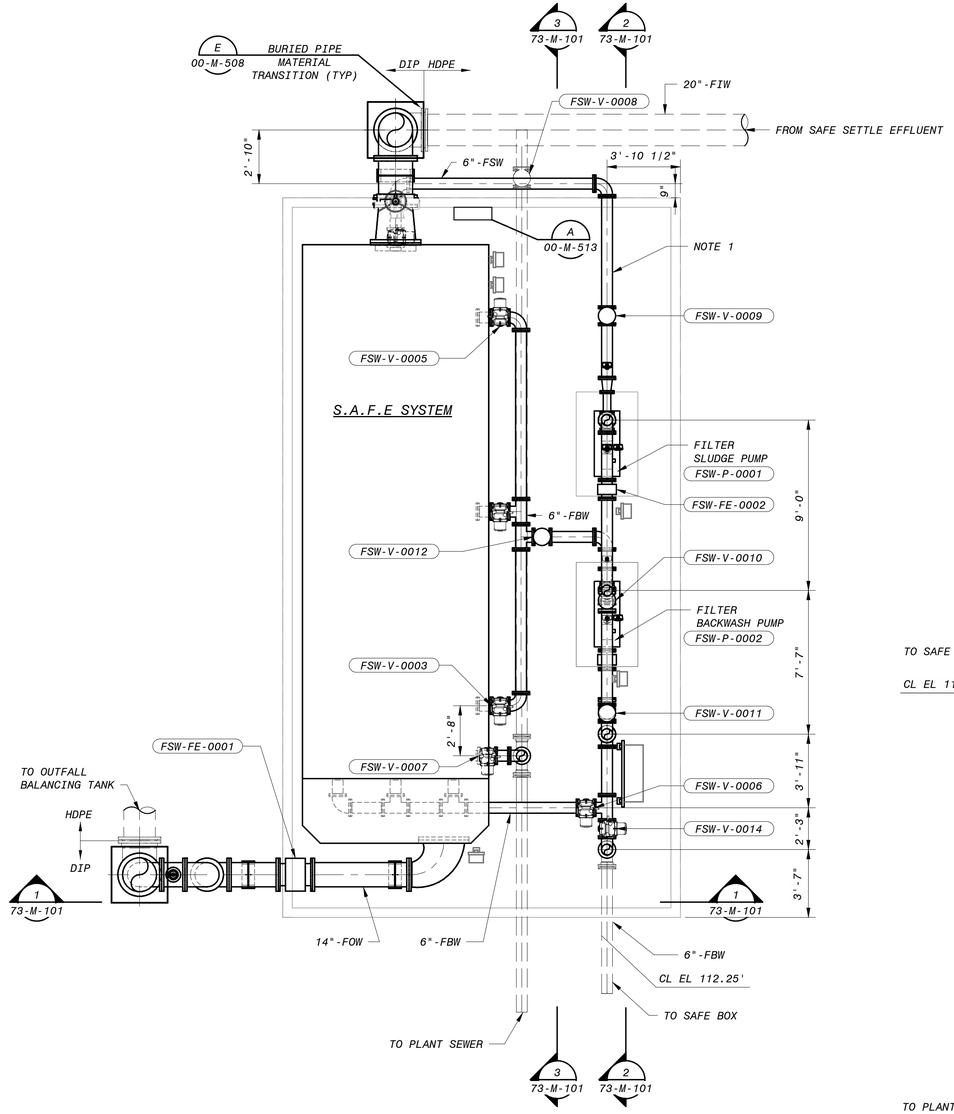

OPERATING FLOOR PLAN

1/4" = 1'-0"

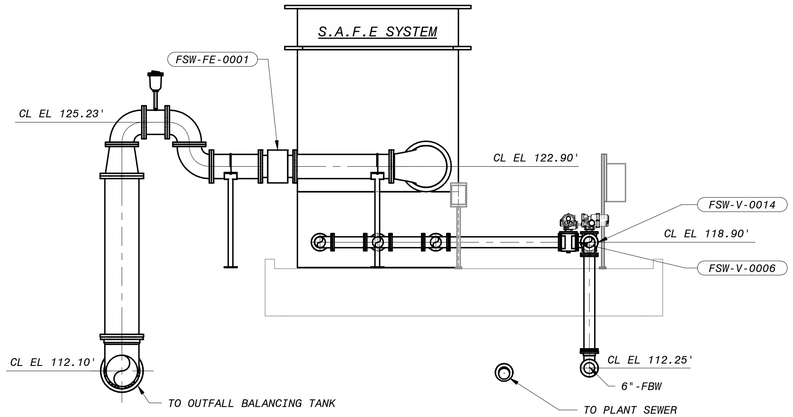

1 SECTION
73-M-101 1/4" = 1'-0"

NOTES:

1. SAFE SYSTEM ABOVE GROUND PIPING LAYOUT TO BE FINALIZED WHEN EQUIPMENT IS PURCHASED.

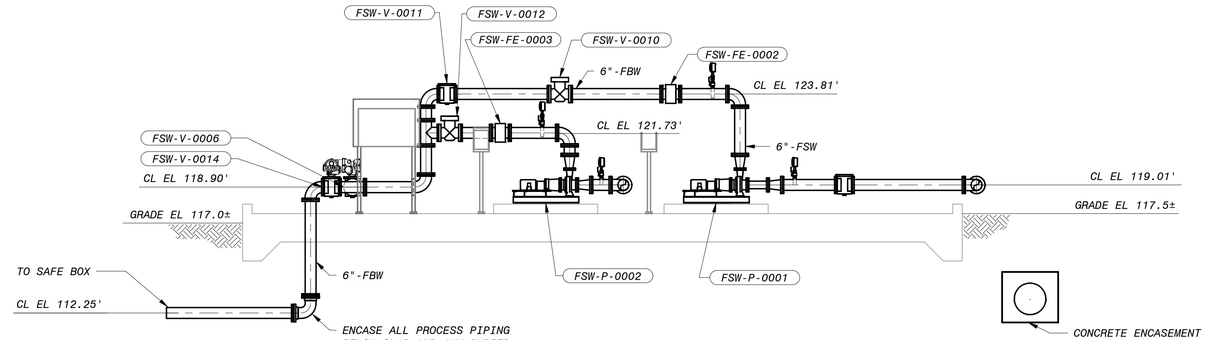

2 SECTION
73-M-101 1/4" = 1'-0"

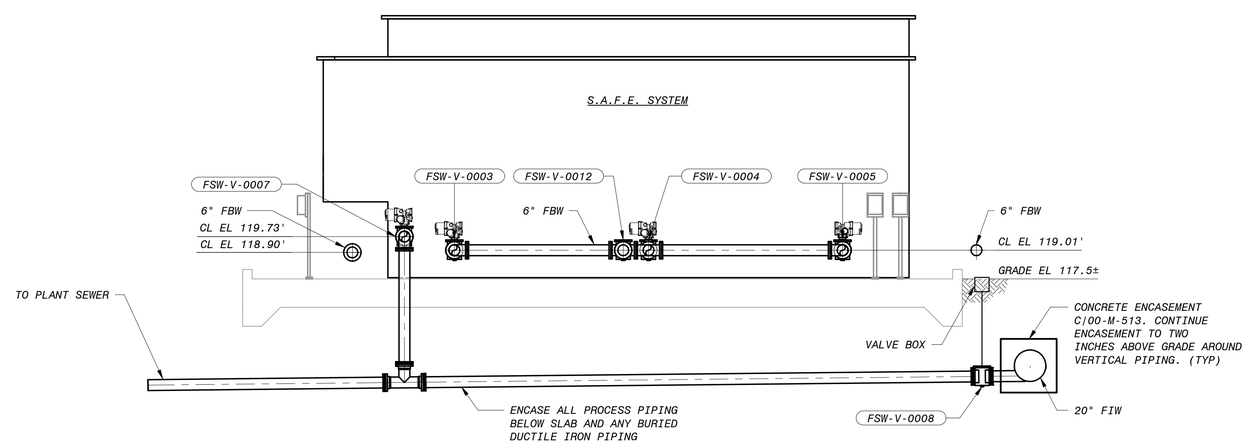

3 SECTION
73-M-101 1/4" = 1'-0"

4' 2' 0' 4' 8'
1/4" = 1'-0"

90% SUBMITTAL - NOT FOR CONSTRUCTION

NO.	BY	CHK	APP	DATE	REVISIONS AND RECORD OF USE
C	KEZ	RWF	EVB	3/31/2020	90% SUBMITTAL
B	KEZ	RT	EVB	7/30/2019	60% SUBMITTAL
A	KEZ	RWF	EVB	3/5/2019	30% SUBMITTAL

REGISTERED PROFESSIONAL ENGINEER
ERICK V. BEVINGTON
No. C 78836
CIVIL
STATE OF CALIFORNIA

BLACK & VEATCH
JOINT VENTURE
BLACK & VEATCH
FILANC

CITY OF MORRO BAY
MORRO BAY WATER
RECLAMATION FACILITY (WRF)

RESIDUALS AREA - SAFE FILTER SYSTEM
CIVIL-MECHANICAL
PLAN, SECTIONS AND DETAILS

DESIGNED: KEZ
DETAILED: MAK
CHECKED:
APPROVED:
DATE:

0 1/2 1
IF THIS BAR DOES NOT MEASURE 1" THEN DRAWING IS NOT TO FULL SCALE

PROJECT NO.
400530

73-M-101
SHEET
OF

PLOTTED: 3|26|2020 11:02:01 AM
D400530

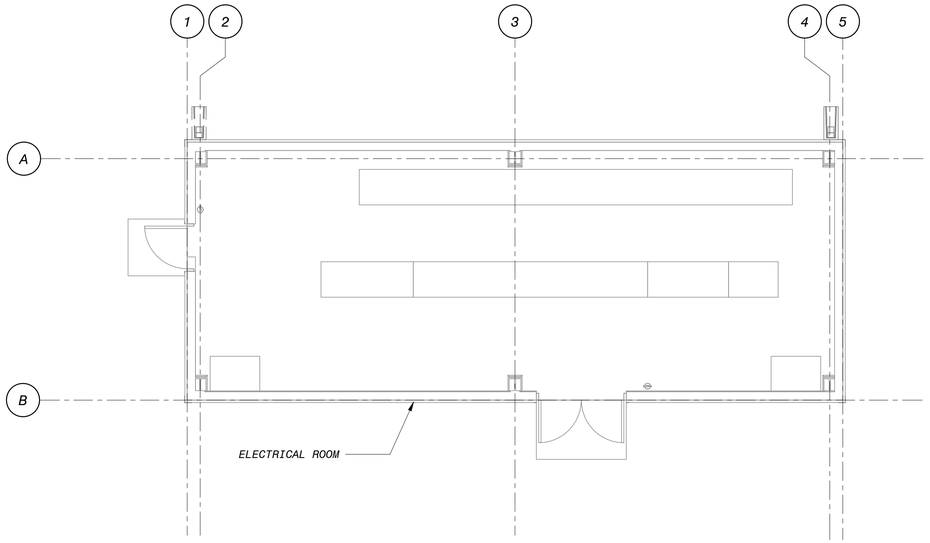

OPERATING LEVEL

3/16" = 1'-0"

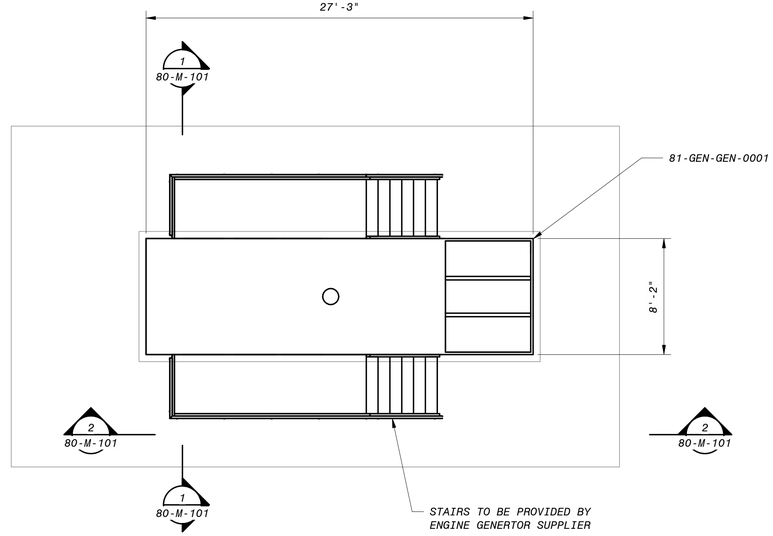

NOTES:

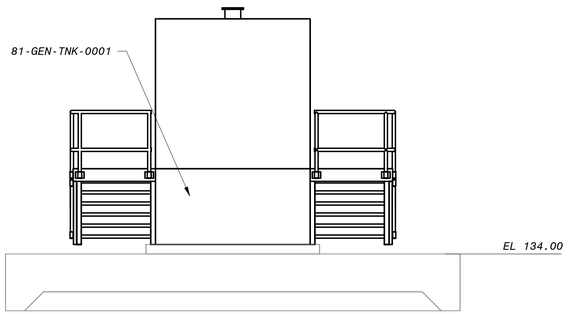

1 SECTION

80-M-101 1/4" = 1'-0"

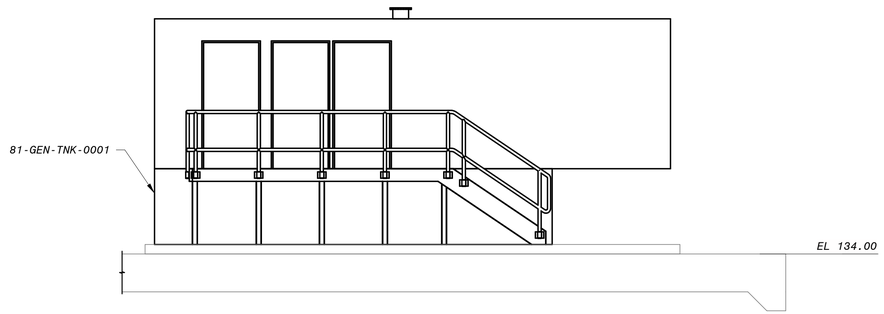

2 SECTION

80-M-101 1/4" = 1'-0"

4' 2' 0' 4' 8'

1/4" = 1'-0"

6" 4' 2' 0' 5' 10'

3/16" = 1'-0"

90% SUBMITTAL - NOT FOR CONSTRUCTION

NO.	BY	CHK	APP	DATE	REVISIONS AND RECORD OF USE
A	KEZ	RWF	EVB	3/31/2020	90% SUBMITTAL

REGISTERED PROFESSIONAL ENGINEER
ERICK V. BEVINGTON
No. C 78836
CIVIL
STATE OF CALIFORNIA

BLACK & VEATCH
JOINT VENTURE
BLACK & VEATCH
FILANC

CITY OF MORRO BAY
MORRO BAY WATER
RECLAMATION FACILITY (WRF)

ELECTRICAL BUILDING
CIVIL-MECHANICAL
OVERALL PLAN AND SECTIONS

DESIGNED: Designer
DETAILED: Author
CHECKED: Checker
APPROVED: Approver
DATE:

0 1/2 1

IF THIS BAR DOES NOT MEASURE 1" THEN DRAWING IS NOT TO FULL SCALE

PROJECT NO.
400530

80-M-101
SHEET
OF

PLOTTED: 3/24/2020 2:09:05 PM
D400530

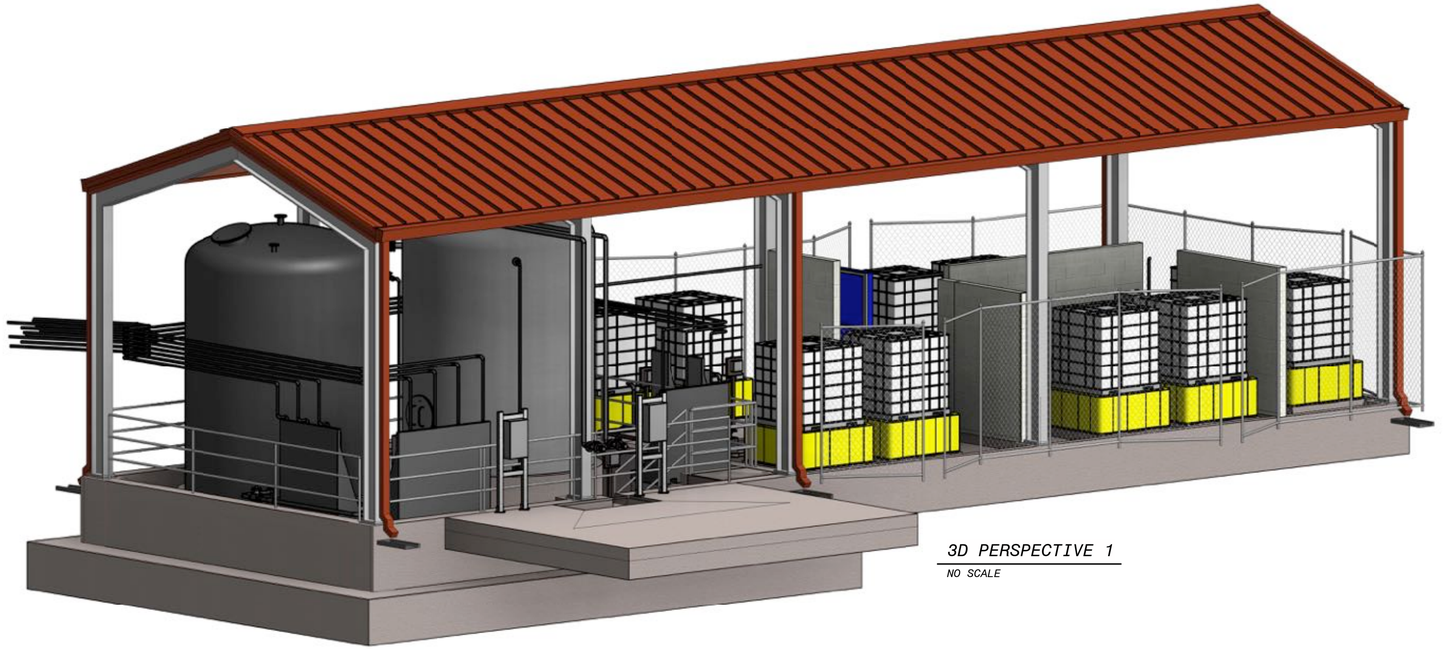

3D PERSPECTIVE 1

NO SCALE

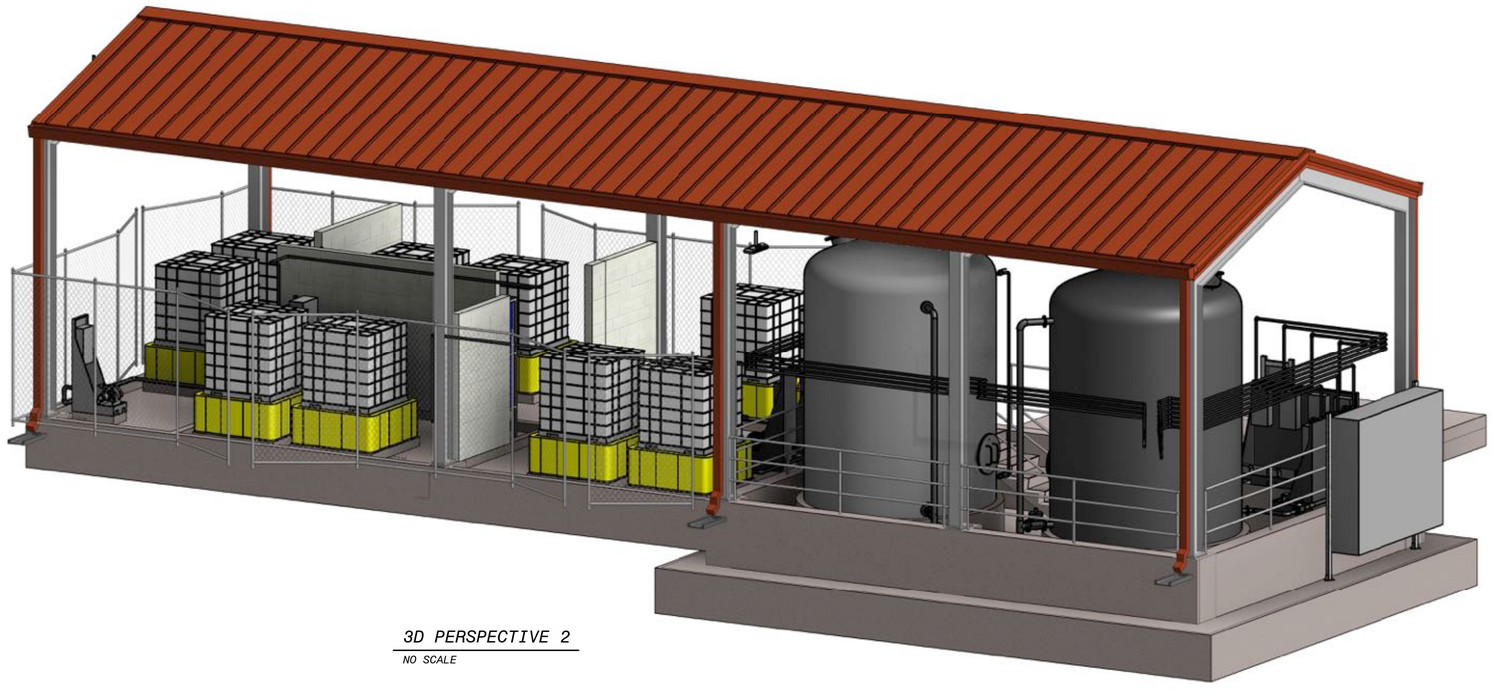

3D PERSPECTIVE 2

NO SCALE

90% SUBMITTAL - NOT FOR CONSTRUCTION

NO.	BY	CHK	APP	DATE	REVISIONS AND RECORD OF USE
C	KEZ	RWF	EVB	3/31/2020	90% SUBMITTAL
B	ADV	RWF	EVB	7/30/2019	60% SUBMITTAL
A	ADV	RWF	EVB	3/5/2019	30% SUBMITTAL

REGISTERED PROFESSIONAL ENGINEER
ERICK V. BEVINGTON
No. C 78836
CIVIL
STATE OF CALIFORNIA

BLACK & VEATCH

JOINT VENTURE

BLACK & VEATCH

FILANC

CITY OF MORRO BAY
MORRO BAY WATER
RECLAMATION FACILITY (WRF)

CHEMICAL FACILITY - OVERALL
CIVIL-MECHANICAL
3D VIEWS

DESIGNED: ADV
DETAILED: MAK
CHECKED:
APPROVED: Approver
DATE:

0 1/2 1
IF THIS BAR DOES NOT MEASURE 1" THEN DRAWING IS NOT TO FULL SCALE

PROJECT NO.
400530

90-M-001
SHEET
OF

PLOTTED: 3/23/2020 2:03:09 PM
D400530

NOTES:
1. AREA TO BE COATED PER THE REQUIREMENTS OF SPECIFICATION 099724.
2. SEE SPECIFICATIONS 323113 "CHAIN-LINK FENCES AND GATES" FOR INSTALLATION DETAILS.

1 2 3 4 5

24' - 3" | 17' - 3" | 14' - 3" | 14' - 3"

A

B

CHEMICAL TOTE (TYP OF 4)

CHEMICAL CONTAINMENT BASIN WITH INTERGRAL SCALE (TYP OF 4)

SCREEN FENCING AROUND TOTE AREA, NOTE 2

CITRIC ACID AREA

SODIUM BISULFITE AREA

SEPARATION WALL BETWEEN NON-CHEMICAL STORAGE TOTES, REFER TO STRUCTURAL DRAWINGS FOR DETAILS (TYP 4)

EMERGENCY EYEWASH STATION (TYP OF 7)

SULFURIC ACID DILUTION PANEL

LIQUID AMMONIA SULFATE AREA

SULFURIC ACID AREA

ANTISCALANT AREA

NOTE 1

23' - 10"

TRUCK UNLOADING AREA

2 / 90-M-301

TO PRODUCT WATER TANK

TO ONSITE RECYCLED WATER PUMPS

TO MBR BACKWASH/CIP

TO UVAOP SYSYTEM

DISINFECTION OF RO PRODUCT WATER

NOCL-P-0401

NOCL-P-0501

NOCL-P-0701

NOCL-P-0601

NOCL-P-0301

NOCL-P-0201

NOCL-P-0101

SODIUM HYDROXIDE TO FINE SCREEN EFFLUENT

TO RO CIP/NEUTRALIZATION TANK

NAOH-P-0301

NAOH-P-0201

NAOH-P-0101

TO OCEAN OUTFALL PIPING

TO RO CONCENTRATE WATER PIPING

TO RO FEED PIPING

SODIUM HYDROXIDE TANK

NAOH-T-0001

SODIUM HYPOCHLORITE TANK

NOCL-T-0001

7' - 5"

1 / 90-M-301

15' - 0" | 6' - 9"

14' - 3" | 14' - 3"

CHEMICAL PIPING ROUTED TO CHEMICAL DUCT BOX. FOR CONTINUATION, REFER TO YARD PIPING DRAWINGS.

2 / 90-M-301

1 / 90-M-301

12" 0' 1' 2' 3' 4' 5' 6' 7'

3/8" = 1'-0"

CHEMICAL FACILITY - OVERALL - PLAN

3/8" = 1'-0"

90% SUBMITTAL - NOT FOR CONSTRUCTION

NO.	DATE	REVISIONS AND RECORD OF USE	BY	CHK	APP
C	3/31/2020	90% SUBMITTAL	KEZ	RWF	EVB
B	7/30/2019	60% SUBMITTAL	ADV	RWF	EVB
A	3/5/2019	30% SUBMITTAL	ADV	RWF	EVB

REGISTERED PROFESSIONAL ENGINEER
ERICK V. BEVINGTON
No. C 78836
CIVIL
STATE OF CALIFORNIA

BLACK & VEATCH
JOINT VENTURE
BLACK & VEATCH
FILANC

CITY OF MORRO BAY
MORRO BAY WATER
RECLAMATION FACILITY (WRF)

CHEMICAL FACILITY - OVERALL
CIVIL-MECHANICAL
PLAN

DESIGNED: ADV
DETAILED: MAK
CHECKED:
APPROVED:
DATE:

0 1/2 1
IF THIS BAR DOES NOT MEASURE 1" THEN DRAWING IS NOT TO FULL SCALE

PROJECT NO.
400530

90-M-101
SHEET
OF

PLOTTED: 3/23/2020 2:01:14 PM
D400530

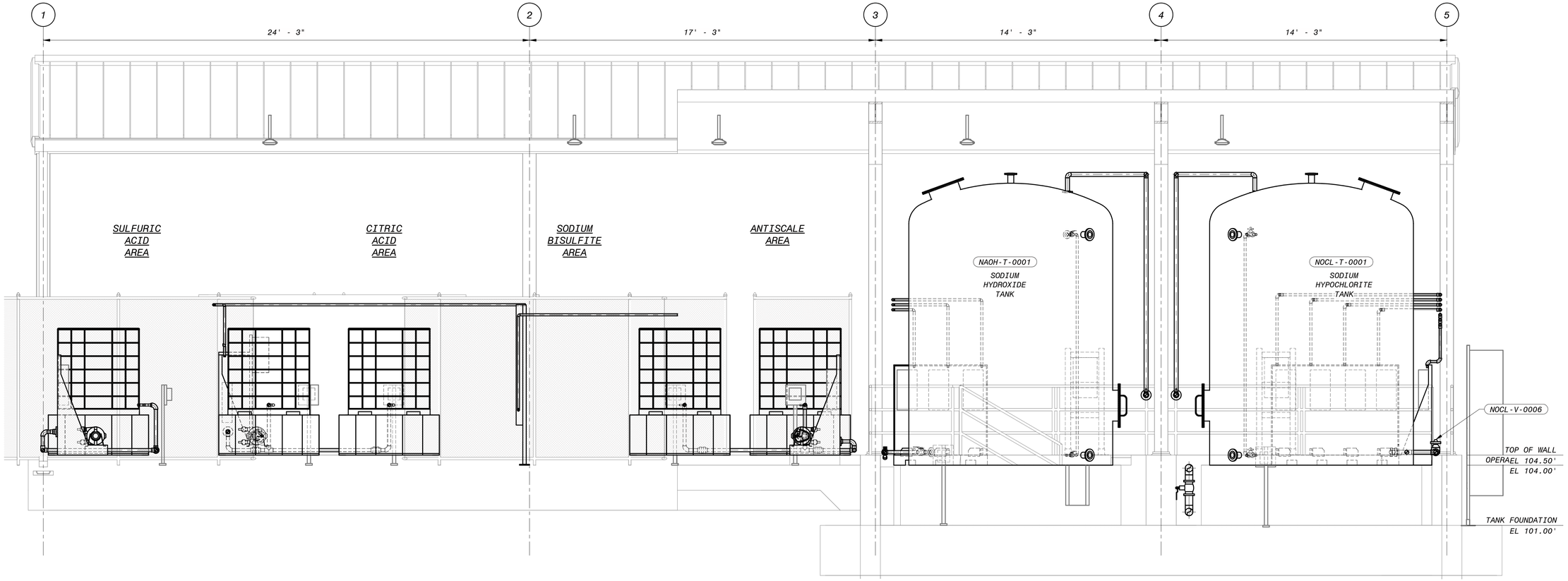

1 SECTION
90-M-101 3/8" = 1'-0"

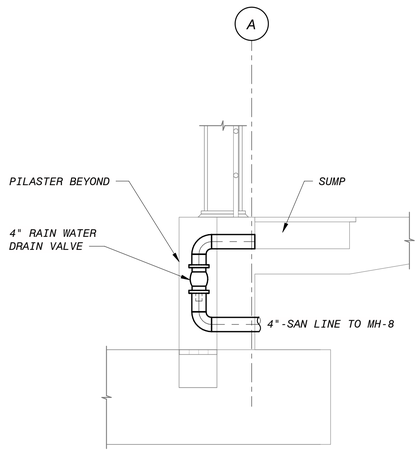

2 SECTION
90-M-101 1/2" = 1'-0"

12" 0' 1' 2' 3' 4' 5' 6' 7'
3/8" = 1'-0"

90% SUBMITTAL - NOT FOR CONSTRUCTION

NO.	BY	CHK	APP	DATE	REVISIONS AND RECORD OF USE
C	KEZ	RWF	EVB	3/31/2020	90% SUBMITTAL
B	ADV	RWF	EVB	7/30/2019	60% SUBMITTAL
A	ADV	RWF	EVB	3/5/2019	30% SUBMITTAL

REGISTERED PROFESSIONAL ENGINEER
ERICK V. BEVINGTON
No. C 78836
CIVIL
STATE OF CALIFORNIA

BLACK & VEATCH
JOINT VENTURE
BLACK & VEATCH
FILANC

CITY OF MORRO BAY
MORRO BAY WATER
RECLAMATION FACILITY (WRF)

CHEMICAL FACILITY - OVERALL
CIVIL-MECHANICAL
SECTION AND DETAILS 1

DESIGNED: ADV
DETAILED: MAK
CHECKED:
APPROVED:
DATE:

0 1/2 1
IF THIS BAR DOES NOT MEASURE 1" THEN DRAWING IS NOT TO FULL SCALE

PROJECT NO.
400530

90-M-301
SHEET
OF

PLOTTED: 3/24/2020 8:38:34 AM
D400530

EQUIPMENT IDENTIFICATION DESCRIPTION

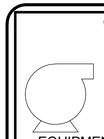

AAA- SSS- FFF - 9999

- AAA - AREA CODE - DENOTES ASSOCIATED AREA
- SSS - SYSTEM CODE - DENOTES ASSOCIATED SYSTEM STREAM
- FFF - FUNCTION CODE - DENOTES ASSOCIATED EQUIPMENT ABBREVIATION
- 9999 - SEQUENCE CODE - UNIQUE ALPHA-NUMERIC IDENTIFIER

PIPELINE IDENTIFICATION DESCRIPTION

SSS - PPP - MTL

- SSS - PIPE SIZE - INCHES UNLESS OTHERWISE NOTED
- PPP - PROCESS CODE - DENOTES ASSOCIATED PROCESS STREAM
- MTL - MATERIAL CODE - DENOTES ASSOCIATED MATERIAL ABBREVIATION

LINE SYMBOLS

- MAJOR PROCESS PIPING OR FLOW CHANNEL
- SECONDARY PROCESS PIPING
- MISCELLANEOUS PIPING
- SCREENED LINE DENOTES EXISTING PIPE OR EQUIPMENT
- DASHED LINE DENOTES FUTURE PIPE AND EQUIPMENT
- ELECTRIC SIGNAL
- HYDRAULIC SIGNAL
- PNEUMATIC SIGNAL
- SIGNAL CONNECTION POINT
- CONTROL SYSTEM BACKBONE NETWORK SIGNAL (ETHERNET)
- FIELD DEVICE NETWORK SIGNAL (ETHERNET)
- NON-STANDARD OR INDEPENDENT CONTROL SYSTEM NETWORK SIGNAL (AS NOTED ON DRAWINGS)

- B | I-XX — SIGNAL LINE GOING TO ANOTHER SHEET
- B | I-XX — SIGNAL LINE FROM ANOTHER SHEET (MATCH LETTERS)
- B | I-XX — PROCESS LINE COMING/GOING TO/FROM ANOTHER SHEET
  - MATCH SHEET NO. IDENTIFIER
  - MATCH LINE NO.
- B — SIGNAL CONNECTION WITHIN THE SAME SHEET
- FLOW ARROW FOR PROCESS PIPING
- PROCESS LINES CROSSING (NOT CONNECTED)

PRIMARY ELEMENT & FITTING SYMBOLS

- DIAPHRAGM SEAL
- PRIMARY FLOW ELEMENT: ORIFICE PLATE
- PRIMARY FLOW ELEMENT: FLUME
- PRIMARY FLOW ELEMENT: TURBINE OR PROPELLER-TYPE
- M — PRIMARY FLOW ELEMENT: ELECTROMAGNETIC
- ΔT — THERMAL DISPERSION OR THERMAL MASS TYPE FLOW ELEMENT
- PRIMARY FLOW ELEMENT: TRANSIT-TIME ULTRASONIC
- FLOW CONDITIONER
- LE / CON — CONDUCTANCE TYPE LEVEL SENSOR
- LE / RAD — RADAR TYPE LEVEL SENSOR
- LE / GWR — GUIDED WAVE RADAR TYPE LEVEL SENSOR
- ANNULAR TYPE DIAPHRAGM SEAL
- PRIMARY FLOW ELEMENT: POSITIVE DISPLACEMENT
- PRIMARY FLOW ELEMENT: VENTURI TUBE, FLOW NOZZLE, OR FLOW TUBE. * SEE MEASUREMENT SYMBOL NOTATIONS LIST
- PRIMARY FLOW ELEMENT: WEIR
- PRIMARY FLOW ELEMENT: PITOT TUBE
- PRIMARY FLOW ELEMENT: CORIOLIS
- HORN OR SIREN
- FG — ROTAMETER
- LE / US — ULTRASONIC TYPE LEVEL SENSOR
- LE / DP — PRESSURE SENSING LEVEL SENSOR
- PILOT LIGHT
- REDUCER - CONCENTRIC
- REDUCER - ECCENTRIC
- FLANGE
- D — DRAIN - BELL-UP
- D — DRAIN - FUNNEL
- FLEXIBLE CONNECTION
- CAP
- PLUG
- T — TRAP
- FLAME CHECK
- SURGE CHAMBER
- FLAME ARRESTER
- SEDIMENT TRAP
- P — INSTRUMENT PURGE OR FLUSHING DEVICE
- UNION
- HOSE CONNECTION
- STRAINER - Y TYPE
- STRAINER - BASKET
- Q — QUICK CONNECT
- VENT
- VENT - SCREENED
- COUPLING
- LG — SIGHTGLASS
- FI — VISUAL FLOW INDICATOR
- MOISTURE SEPARATOR
- EXPANSION LOOP
- SUCTION DIFFUSER
- THERMOWELL

CHEMICAL FEED EQUIPMENT SYMBOLS

- DIFFUSER: TANK
- DIFFUSER: CHANNEL
- INJECTOR
- RUPTURE DISK
- PULSATION DAMPNER
- CHLORINE CYLINDER
- VAPOR SUPERHEATER
- PRESSURE BUILDING COIL
- SPECTACLE, BLIND, CLOSED
- SPECTACLE, BLIND, OPEN
- CALIBRATION COLUMN
- EXPANSION TANK OR FUNNEL
- WEIGH SCALE
- DRIP LEG HEATER
- TOTE
- AS — AUTOMATIC SWITCHOVER
- PASTE TYPE LIME SLAKER
- EDUCTOR
- GAS FEEDER
- EVAPORATOR
- DRY CHEMICAL FEEDER
- TON CONTAINER
- POLYMER BLENDER FEEDER
- S — POLYMER BLENDER FEEDER
- POLYMER INJECTION RING
- DIFFUSER
- DIFFUSER - PLAN
- CO2 VAPORIZOR
- COMBINATION SHOWER/ EYEWASH FOUNTAIN
- EYEWASH FOUNTAIN
- SHOWER
- DOUBLE CONTAINMENT PIPE

MECHANICAL EQUIPMENT SYMBOLS

- VAPORIZER: AMBIENT
- PARTICULATE FILTER
- ROTARY SCROLL COMPRESSOR
- AIR FILTER
- WATER FILTER: CARTRIDGE TYPE
- WATER FILTER: MEMBRANE TYPE
- MIXER
- COMPRESSOR
- VALVE: MATERIAL HANDLING ROTARY
- AIR REGULATOR
- STATIC MIXER
- HEAT EXCHANGER: TYPE 1
- HEAT EXCHANGER: TYPE 2
- HEAT EXCHANGER: FINNED TUBE
- HEAT EXCHANGER: SHELL & TUBE
- HEAT EXCHANGER: PLATE & FRAME
- HEAT EXCHANGER: SPIRAL
- HEAT EXCHANGER: DOUBLE PIPE
- HEAT EXCHANGER: AIR
- BOILER
- AFTERCOOLER
- FILTER SEPARATOR
- S — SILENCER
- HYDROCYCLONE

PUMP & BLOWER SYMBOLS

- CENTRIFUGAL PUMP OR OTHER TYPE NOT SPECIFIED
- SUBMERGED CENTRIFUGAL PUMP
- SCREW (LIFT) PUMP
- ROTARY PUMP
- PROGRESSING CAVITY PUMP
- POSITIVE DISPLACEMENT PUMP
- PLUNGER PUMP
- VERTICAL PUMP
- SUMP PUMP
- CENTRIFUGAL FAN
- CENTRIFUGAL BLOWER
- POSITIVE DISPLACEMENT BLOWER
- COMPRESSOR: RECIPROCATING
- COMPRESSOR: ROTARY SCREW
- COMPRESSOR: LIQUID RING
- MOTOR DRIVEN DIAPHRAGM METERING PUMP
- S — SOLENOID PUMP
- PERISTALTIC PUMP
- DRUM PUMP
- DOUBLE DIAPHRAGM PUMP
- ELECTRIC MOTOR
- AG (ABOVE GROUND)
- BG (BELOW GROUND)

VALVE & GATE SYMBOLS

- GATE: SLUICE OR SLIDE
- VALVE: GATE OR OTHER TWO-WAY TYPE NOT OTHERWISE IDENTIFIED
- VALVE: BALL
- VALVE: GLOBE
- VALVE: BUTTERFLY
- VALVE: ECCENTRIC PLUG
- VALVE: NON-ECCENTRIC PLUG
- VALVE: THREE WAY
- VALVE: FOUR WAY
- VALVE: CHECK
- VALVE: DIAPHRAGM
- VALVE: VPORT BALL
- VALVE: MUD
- VALVE: THERMAL SHUTOFF
- VALVE: NEEDLE
- VALVE: SLEEVE
- GATE: FLAP
- VALVE: VENTED BALL
- VALVE: DIVERTER
- 1/2" THREADED TAP WITH A 1/2" THREADED PLUG
- VALVE: PRESSURE REDUCING
- VALVE: PRESSURE SUSTAINING
- VALVE: PRESSURE REDUCING (SELF ACTUATING TYPE)
- VALVE: PRESSURE SUSTAINING (SELF ACTUATING TYPE)
- P — VALVE: PILOT ACTUATED RELIEF
- VALVE: VACUUM RELIEF
- VALVE: PRESSURE RELIEF
- VALVE: PRESSURE/VACUUM RELIEF
- VALVE: ANGLE
- VALVE: SET STOP
- VALVE: PINCH
- VALVE: STOP CHECK
- VALVE: TELESCOPING
- VALVE: COMBINATION AIR
- VALVE: AIR RELEASE
- VALVE: AIR VACUUM
- VALVE: CHLORINE WITH YOKE
- M — CHLORINE VACUUM REGULATOR
- VALVE: KNIFE GATE
- BACKFLOW PREVENTER
- VACUUM BREAKER
- EXPLOSION RELIEF
- VALVE: GENERIC ROTARY

VALVE AND GATE ACTUATOR SYMBOLS

- HANDWHEEL ACTUATOR
- S — SOLENOID
- S / R — SOLENOID - MANUAL RESET
- S / R / R — SOLENOID - REMOTE RESET
- PRESSURE BALANCED DIAPHRAGM
- M — INTELLIGENT ELECTRIC OR STANDARD ELECTRIC
- M / SM — SMALL MOTOR ACTUATOR
- I/P — CURRENT - TO-PNEUMATIC ACTUATOR
- E/H — ELECTRIC-HYDRAULIC
- SPRING-DIAPHRAGM ACTUATOR OR OTHERWISE UNSPECIFIED
- P — PNEUMATIC ACTUATOR
- P / DA — PNEUMATIC ACTUATOR DOUBLE ACTING
- P / SC — PNEUMATIC ACTUATOR SPRING CLOSE
- P / SO — PNEUMATIC ACTUATOR SPRING OPEN
- FLOAT OPERATED VALVE
- SPRING OR WEIGHT ACTUATED RELIEF OR SAFETY VALVE ACTUATOR LOADED VALVE
- QUICK OPENING VALVE
- QUICK CLOSING VALVE
- LOADING/BACK PRESSURE VALVE

WATER & WASTEWATER SYMBOLS

- OZONE GENERATOR WITH POWER SUPPLY
- OZONE GENERATOR
- GRIT CONCENTRATOR & DEWATERING SCREW
- BAR SCREEN: MECHANICAL
- GRIT COLLECTOR: VORTEX TYPE
- RECTANGULAR BASIN
- SOLIDS COLLECTOR
- SOLIDS COLLECTOR W/SETTLING PLATES
- RECTANGULAR SEDIMENTATION BASIN
- UV HORIZONTAL BULBS
- MANUAL BAR SCREEN
- GAS FLARE
- GRIT CLASSIFIER
- GRAVITY FILTER
- GRAVITY THICKENER
- CIRCULAR SEDIMENTATION BASIN
- DAF
- BELT FILTER PRESS
- GRAVITY BELT THICKENER
- CENTRIFUGE
- RECTANGULAR SEDIMENTATION BASIN WITH SETTLING PLATES
- GRIT BASIN
- SLUDGE GRINDER: INLINE
- SLUDGE GRINDER: CHANNEL MOUNTED
- GRIT CONCENTRATOR

MATERIAL HANDLING EQUIPMENT SYMBOLS

- CYCLONE SEPARATER
- DUMPSTER
- BIN: LIVE BOTTOM
- BIN: SLIDING FRAME
- H — SCREEN: SINGLE VIBRATORY
- SCREEN: DOUBLE VIBRATORY
- GRINDER
- BIN - CLOSED TOP
- BIN - OPEN TOP
- HORIZONTAL BAR SCREEN
- MIXER: PUGMILL
- MIXER: BLENDER
- CONVEYOR: BELT
- CONVEYOR: VIBRATORY
- H — PISTON CAKE PUMP: SINGLE
- H / H — PISTON CAKE PUMP: DOUBLE
- CONVEYOR: SCREW
- HOPPER
- DUST HOPPER

GENERAL NOTES

1. IN GENERAL, THE P&ID SYMBOLS AND DEVICE IDENTIFICATIONS ARE BASED ON INTERNATIONAL SOCIETY OF AUTOMATION, STANDARD PRACTICE ANSI/ISA-5.1 (2009). SOME MODIFICATIONS, ADDITIONS, AND ALTERATIONS HAVE BEEN MADE AS NEEDED TO ACCOMMODATE THE PROJECT REQUIREMENTS.
2. SOME CONTROL AND INTERLOCK REQUIREMENTS WHICH CAN BE MORE CLEARLY ILLUSTRATED ON SCHEMATIC DRAWINGS HAVE BEEN OMITTED FROM THE P&ID DRAWINGS.
3. THIS IS A GENERAL LEGEND SHEET. SOME SYMBOLS AND ABBREVIATIONS MAY NOT BE UTILIZED ON THIS SPECIFIC PROJECT.
4. PIPING AND EQUIPMENT LEGEND APPLIES TO P&ID SHEETS ONLY AND MAY DIFFER FROM LEGENDS FOR OTHER SHEETS.

90% SUBMITTAL - NOT FOR CONSTRUCTION

NO.	BY	CHK	APP	DATE	REVISIONS AND RECORD OF USE
A	BLB	TAH	EVB	7/30/2019	60% SUBMITTAL

REGISTERED PROFESSIONAL ENGINEER — BRIAN L. BUTLER — No. E 16569 — ELECTRICAL — STATE OF CALIFORNIA

BLACK & VEATCH JOINT VENTURE — BLACK & VEATCH — FILANC

CITY OF MORRO BAY
FILANC BLACK & VEATCH DB PROPOSAL
MORRO BAY WRF

LEGEND & ABBREVIATIONS
P&ID
SHEET 1

DESIGNED: BLB
DETAILED: PVR
CHECKED: TAH
APPROVED:
DATE:

0 1/2 1
IF THIS BAR DOES NOT MEASURE 1" THEN DRAWING IS NOT TO FULL SCALE

PROJECT NO. 400530

00-I-001
SHEET OF

PLOTTED: 3/24/2020 3:11:52 PM
D400530

INSTRUMENT AND I/O ABBREVIATIONS
MEANINGS OF IDENTIFICATION LETTERS

LETTER	FIRST LETTER		SUCCEEDING LETTERS		
	MEASURED OR INITIATING VARIABLE	VARIABLE MODIFIER	READOUT OR PASSIVE FUNCTION	OUTPUT OR ACTIVE FUNCTION	FUNCTION MODIFIER
A	ANALYSIS		ALARM		
B	BURNER, COMBUSTION		USER'S CHOICE	USER'S CHOICE	USER'S CHOICE
C	USER'S CHOICE			CONTROL	CLOSE
D	USER'S CHOICE	DIFFERENTIAL			DEVIATION
E	VOLTAGE (EMF)		SENSOR, PRIMARY ELEMENT		
F	FLOW, FLOW RATE	RATIO (FRACTION)			
G	USER'S CHOICE		GLASS, GAUGE, VIEWING DEVICE		
H	HAND (MANUALLY INITIATED)				HIGH
I	CURRENT (ELECTRICAL)		INDICATE		
J	POWER		SCAN		
K	TIME OR TIME-SCHEDULE	TIME RATE OF CHANGE		CONTROL STATION	
L	LEVEL		LIGHT		LOW
M	USER'S CHOICE	MOMENTARY			MIDDLE OR INTERMEDIATE
N	USER'S CHOICE		USER'S CHOICE	USER'S CHOICE	USER'S CHOICE
O	TORQUE		ORIFICE (RESTRICTION)		OPEN
P	PRESSURE OR VACUUM		POINT (TEST CONNECTION)		
Q	QUANTITY	INTEGRATE OR TOTALIZE	INTEGRATE OR TOTALIZE		
R	RADIATION		RECORD		RUN
S	SPEED OR FREQUENCY	SAFETY		SWITCH	STOP
T	TEMPERATURE			TRANSMIT	
U	MULTIVARIABLE		MULTIFUNCTION	MULTIFUNCTION	
V	VIBRATION OR MECHANICAL ANALYSIS			VALVE, DAMPER OR LOUVER	
W	WEIGHT OR FORCE		WELL, PROBE		
X	UNCLASSIFIED	X-AXIS	ACCESORY DEVICES OR UNCLASSIFIED	UNCLASSIFIED	UNCLASSIFIED
Y	EVENT, STATE, OR PRESENCE	Y-AXIS		AUXILIARY DEVICES	
Z	POSITION, DIMENSION	Z-AXIS		DRIVE, ACTUATOR OR FINAL CTRL ELEMENT	

*NOTE TO DESIGNER: UPDATE "USER'S CHOICE" FIELDS FOR EACH PROJECT.

GENERAL NOTES

1. IN GENERAL, THE P&ID SYMBOLS AND DEVICE IDENTIFICATIONS ARE BASED ON INTERNATIONAL SOCIETY OF AUTOMATION, STANDARD PRACTICE ANSI/ISA-5.1 (2009). SOME MODIFICATIONS, ADDITIONS, AND ALTERATIONS HAVE BEEN MADE AS NEEDED TO ACCOMMODATE THE PROJECT REQUIREMENTS.
2. SOME CONTROL AND INTERLOCK REQUIREMENTS WHICH CAN BE MORE CLEARLY ILLUSTRATED ON SCHEMATIC DRAWINGS HAVE BEEN OMITTED FROM P&ID DRAWINGS.
3. THIS IS A GENERAL LEGEND SHEET. SOME SYMBOLS AND ABBREVIATIONS MAY NOT BE UTILIZED ON THIS SPECIFIC PROJECT. PIPING AND EQUIPMENT LEGEND APPLIES TO P&ID SHEETS.

PIPELINE MATERIAL CODE ABBREVIATIONS

DB-01	POLYETHYLENE TUBING IN SCHEDULE 40 CPVC CARRIER PIPE
DB-02	TEFLON TUBING IN SCHEDULE 40 CPVC CARRIER PIPE
DIP	SECTION 15061, DUCTILE IRON PIPE
SP	SECTION 15062, STEEL PIPE
PVC-XX	SECTION 15061, POLYVINYL CHLORIDE PIPE
PVC-01	SCHEDULE 40 PVC WITH SOLVENT WELDED FITTINGS
PVC-02	SCHEDULE 80 PVC WITH SOLVENT WELDED FITTINGS
PE-XX	SECTION 15067, MISCELLANEOUS PLASTIC PIPE, TUBING, AND ACCESSORIES
PE-06	SECTION 15067, MISCELLANEOUS PLASTIC PIPE, TUBING, AND ACCESSORIES
CPVC-XX	SECTION 15067, MISCELLANEOUS PLASTIC PIPE, TUBING, AND ACCESSORIES
CPVC-01	SCHEDULE 40 CPVC WITH SOLVENT WELDED FITTINGS
CPVC-02	SCHEDULE 80 CPVC WITH SOLVENT WELDED FITTINGS
CRP-XX	SECTION 15060, MISCELLANEOUS PIPING AND PIPE ASSEMBLY
CRP-01	CARPENTER 20 PIPE
HDPE	SECTION 02634, HIGH DENSITY POLYETHYLENE (HDPE) PRESSURE PIPE
SS-XX	SECTION 15064, STAINLESS STEEL PIPE, TUBING, AND ACCESSORIES
SS-02	AERATION PIPING SCHEDULE 10, 304SS
SS-04	PROCESS PIPING SCHEDULE 40, 304SS
SS-05	PROCESS PIPING SCHEDULE 40, 316SS
CSG-XX	SECTION 15065, MISCELLANEOUS STEEL PIPE, TUBING, AND ACCESSORIES
CS-XX	SECTION 15065, MISCELLANEOUS STEEL PIPE, TUBING, AND ACCESSORIES
CS-02	STANDARD WEIGHT STEEL WITH SOCKET WELDED FITTINGS
CS-03	STANDARD WEIGHT STEEL WITH BUTTWELDED FITTINGS
CI-XX	SECTION 15069, CAST IRON SOIL PIPE AND ACCESSORIES
CU-XX	SECTION 15070, COPPER TUBING AND ACCESSORIES

1. XX= numbers 01-20

INSTRUMENT AND I/O ABBREVIATION DEFINITIONS

AAH	ANALYZER ALARM HIGH
AAHH	ANALYZER ALARM HIGH-HIGH
AAL	ANALYZER ALARM LOW
AALL	ANALYZER ALARM LOW-LOW
AAX	ALARM HORN
AAL	STROBE ALARM LIGHT
AE	ANALYZER SENSOR
AI	ANALYZER INDICATION
AIT	ANALYZER INDICATING TRANSMITTER
ASH	ANALYZER SWITCH HIGH
ASHH	ANALYZER SWITCH HIGH-HIGH
CB	CONITROL BLOCK REFERENCE (SCADA LEVEL)
FA	TROUBLE
FAL	FLOW ALARM LOW
FAH	FLOW ALARM HIGH
FC	FLOW CONTROLLER
FI	FLOW DIGITAL INDICATOR (LED OR SCREEN)
FIC	FLOW INDICATING CONTROLLER
FE	PRIMARY FLOW ELEMENT/SENSOR
FG	FLOW SIGHT GAUGE
FIT	FLOW INDICATING TRANSMITTER
FQG	FLOW TOTALIZING GAUGE
FQIT	FLOW TOTALIZING INDICATING TRANSMITTER
FSH	FLOW SWITCH HIGH
FSL	FLOW SWITCH LOW
FY	FLOW SIGNAL CONVERTER, REPEATER, OR ISOLATOR
HIC	HAND INDICATING CONTROLLER
HMS	MOMENTARY PUSHBUTTON OR SELECTOR SWITCH
HS	HAND SWITCH
IE	CURRENT ELEMENT/SENSOR
IAH	CURRENT ALARM HIGH (MOTOR OVERLOAD)
ISH	CURRENT SWITCH HIGH USED TO DETECT HIGH TORQUE)
JA	POWER FAILURE ALARM
JI	POWER INDICATOR
JL	POWER INDICATING LIGHT
JIT	POWER INDICATING TRANSMITTER
KQI	TIME TOTALIZING INDICATOR
LAL	LEVEL ALARM LOW
LALL	LEVEL ALARM LOW-LOW
LAH	LEVEL ALARM HIGH
LAHH	LEVEL ALARM HIGH-HIGH
LE	PRIMARY LEVEL ELEMENT/SENSOR
LG	LEVEL SIGHT GAUGE
LI	LEVEL INDICATOR (LED OR SCREEN)
LSL	LEVEL SWITCH LOW
LSLL	LEVEL SWITCH LOW LOW
LSH	LEVEL SWITCH HIGH
LSHH	LEVEL SWITCH HIGH-HIGH
LY	LEVEL SIGNAL CONVERTER, ISOLATOR, OR REPEATER
OAH	TORQUE ALARM HIGH
OAHH	TORQUE ALARM HIGH HIGH
OSH	TORQUE SWITCH HIGH
OSHH	TORQUE SWITCH HIGH-HIGH
PAL	PRESSURE ALARM LOW
PALL	PRESSURE ALARM LOW-LOW
PAH	PRESSURE ALARM HIGH
PAHH	PRESSURE ALARM HIGH-HIGH
PDG	DIFFERENTIAL PRESSURE GAUGE
PDI	DIFFERENTIAL PRESSURE INDICATOR (LED OR SCREEN)
PDIT	DIFFERENTIAL PRESSURE INDICATING TRANSMITTER
PDAH	DIFFERENTIAL PRESSURE ALARM HIGGH
PDAHH	DIFFERENTIAL PRESSURE ALARM HIGH-HIGH
PDSH	DIFFERENTIAL PRESSURE SWITCH HIGH
PDSHH	DIFFERENTIAL PRESSURE SWITCH HIGH-HIGH
PDSL	DIFFERENTIAL PRESSURE SWITCH LOW
PDSLL	DIFFERENTIAL PRESSURE SWITCH LOW-LOW
PE	PRESSURE SENSOR
PG	PRESSURE GAUGE
PI	PRESSURE INDICATOR (LED OR SCREEN)
PIT	PRESSURE INDICATING TRANSMITTER
PSL	PRESSURE SWITCH LOW
PSH	PRESSURE SWITCH HIGH
SI	SPEED INDICATION (LED OR SCREEN)
SC	SPEED CONTROL
SIT	SPEED INDICATING TRANSMITTER
SSL	SPEED SWITCH LOW
SIT	SPEED INDICATING TRANSMITTER
TAH	TEMPERATURE ALARM HIGH
TAHH	TEMPERATURE ALARM HIGH-HIGH
TAL	TEMPERATURE ALARM LOW
TDI	DIFFERENTIAL TEMPERATURE INDICATOR (LED OR SCREEN)
TDIT	DIFFERENTIAL TEMPERATURE TRANSMITTER
TE	TEMPERATURE SENSOR/RESISTANCE
	TEMPERATURE DETECTOR
TSH	TEMPERATURE SWITCH HIGH
TSHH	TEMPERATURE SWITCH HIGH HIGH
TSL	TEMPERATURE SWITCH LOW
TG	TEMPERATURE GAUGE
TI	TEMPERATURE INDICATOR (LED OR SCREEN)
TIT	TEMPERATURE INDICATING TRANSMITTER
UA	MULTIVARIABLE/COMMON ALARM/COMMON FAULT
UCA	ALARM CONDITION MODIFIED COMMAND
UCR	RUN/START COMMAND
UCS	STOP COMMAND
VAH	VIBRATION ALARM HIGH
WE	PRIMARY WEIGHT SENSOR/LOAD CELL
WG	WEIGHT GAUGE
WIT	WEIGHT INDICATING TRANSMITTER
YA	GENERAL ALARM EVENT
YI	EVENT INDICATION (LED OR SCREEN)
YIR	RUNNING INDICATION
YIS	STOPPED INDICATION
YL	EVENT INDICATING LIGHT
YLR	RUNNING INDICATING LIGHT
YLS	STOPPED INDICATING LIGHT
ZI	POSITION INDICATOR
ZC	POSITION SET POINT
ZCC	CLOSE COMMAND
ZCO	OPEN COMMAND
ZIC	CLOSED INDICATION
ZIO	OPEN INDICATION
ZLC	CLOSED INDICATING LIGHT
ZLO	OPEN INDICATING LIGHT
ZSC	CLOSED POSITION SWITCH
ZSO	OPEN POSITION SWITCH
ZIT	POSITION INDICATING TRANSMITTER
ZT	POSITION TRANSMITTER

GENERAL INSTRUMENT SYMBOLS

FIELD MOUNTED DISCRETE INSTRUMENT

PILOT LIGHT

DISCRETE INSTRUMENT MOUNTED ON FACE PRIMARY OF PANEL

DISCRETE INSTRUMENT MOUNTED BEHIND OR INSIDE OF PRIMARY PANEL

DISCRETE INSTRUMENT MOUNTED ON FACE OF LOCAL PANEL

DISCRETE INSTRUMENT MOUNTED BEHIND OR INSIDE OF LOCAL PANEL

SINGLE INSTRUMENT HOUSING CONTAINING TWO (OR MORE) INSTRUMENTATION FUNCTIONS

I — GENERAL CONTROL INTERLOCK FUNCTION, SEE SCHEMATICS AND SYSTEM SPECIFICATIONS FOR SPECIFIC FUNCTION

DIGITAL SYSTEMS INTERFACE SYMBOLS

NOTE: REFER TO DETAILED SYSTEM SPECIFICATIONS FOR FUNCTIONAL DESCRIPTION. ALSO SEE I/O SCHEDULES FOR COMPLETE INPUT AND OUTPUT LISTINGS.

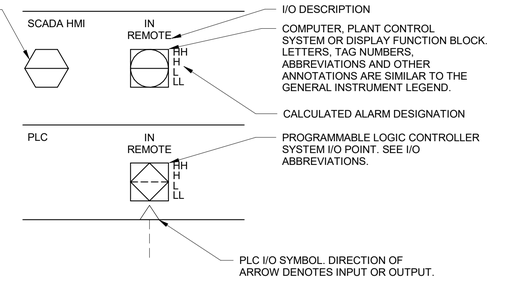

- DISCRETE INPUT
- DISCRETE OUTPUT
- ANALOG INPUT
- ANALOG OUTPUT
- PULSE INPUT

INSTRUMENTATION SYMBOLOGY AND DESIGNATIONS

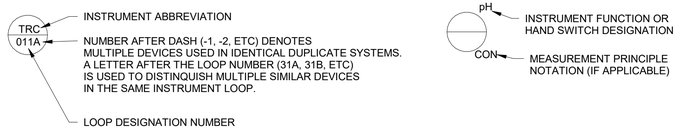

FUNCTION DESIGNATIONS AND ABBREVIATIONS

MEASUREMENT PRINCIPLE NOTATIONS

CON	CONDUCTANCE
DP	DIFFERENTIAL PRESSURE SENSING
FLN	FLOW NOZZLE
FLT	FLOW TUBE
GWR	GUIDED WAVE RADAR
RAD	RADAR
US	ULTRASONIC
VENT	VENTURI TUBE

CALCULATED ALARM DESIGNATIONS

L	LOW
LL	LOW-LOW
H	HIGH
HH	HIGH-HIGH

INDICATING LIGHT/ALARM DESIGNATIONS

OVRLD	OVERLOAD
TRQ HI	TORQUE HIGH
TRQ HI-HI	TORQUE HIGH HIGH

INSTRUMENT FUNCTIONS

K	GAIN OR ATTENUATE (INPUT:OUTPUT)
-K	GAIN AND REVERSE
Σ	ADD OR SUM (ADD AND SUBTRACT)
Δ	SUBTRACT (DIFFERENCE)
√‾	EXTRACT SQUARE ROOT
÷	DIVIDE
F(X)	CHARACTERIZE SIGNAL
>	HIGH-SELECT
<	LOW-SELECT
×	MULTIPLY
∫	INTEGRATE (TIME INTEGRAL)
CH4	METHANE
CL2	CHLORINE RESIDUAL
CO2	CARBON DIOXIDE
DO	DISSOLVED OXYGEN
H2S	HYDROGEN SULFIDE
LEL	LOWER EXPLOSIVE LIMIT
MCC	MOTOR CONTROL CENTER
MLSS	MIXED LIQUOR SUSPENDED SOLIDS
02	OXYGEN (PURITY)
03	OZONE
pH	pH
TURB	TURBIDITY
COND	CONDUCTIVITY

HAND SWITCH DESIGNATIONS

FR	FORWARD-REVERSE
OCA	OPEN-CLOSE-AUTO
OOR	ON-OFF-REMOTE
OOA	ON-OFF-AUTO
LOR	LOCAL-OFF-REMOTE
OO	ON-OFF
OC	OPEN-CLOSE
LR	LOCAL REMOTE
HOA	HAND-OFF-AUTO
LOA	LOCAL-OFF-AUTO
HOR	HAND-OFF-REMOTE
OSC	OPEN-STOP-CLOSE
FWD	FORWARD
REV	REVERSE

TRANSDUCER & CONVERTER DESIGNATION

E	VOLTAGE
FSK	FREQUENCY SHIFT KEYING
H	HYDRAULIC
I	CURRENT
P	PNEUMATIC PULSE
PD	PULSE DURATION
PF	PULSE FREQUENCY
R	RESISTANCE (ELECTRICAL)

EXAMPLE: I/P = CURRENT TO PNEUMATIC TRANSDUCER

POWER SUPPLY ABBREVIATIONS

AS	AIR SUPPLY
ES	ELECTRIC SUPPLY
GS	GAS SUPPLY
HS	HYDRAULIC SUPPLY
NS	NITROGEN SUPPLY
SS	STEAM SUPPLY
WS	WATER SUPPLY
24V	24VDC
120V	120VAC
480V	480VAC

120V — POWER SUPPLY SOURCE LABEL. USED ONLY WHERE NECESSARY TO HELP CLARIFY AN INSTRUMENT OR SYSTEM FUNCTION.

*NOTE TO DESIGNER: OR 24VDC OR 480VAC

90% SUBMITTAL- NOT FOR CONSTRUCTION

NO.	BY	CHK	APP'D	DATE	REVISIONS AND RECORD OF USE
A	BLB	TAH	EVB	7/30/2019	60% SUBMITTAL

REGISTERED PROFESSIONAL ENGINEER — BRIAN L. BUTLER — No. E 16569 — ELECTRICAL — STATE OF CALIFORNIA

BLACK & VEATCH

JOINT VENTURE

BLACK & VEATCH

FILANC

CITY OF MORRO BAY
FILANC BLACK & VEATCH DB PROPOSAL
MORRO BAY WRF

LEGEND & ABBREVIATIONS
P&ID
SHEET 2

DESIGNED: BLB
DETAILED: PVR
CHECKED: TAH
APPROVED:
DATE:

0 1/2 1
IF THIS BAR DOES NOT MEASURE 1" THEN DRAWING IS NOT TO FULL SCALE

PROJECT NO. 400530

00-I-002
SHEET
OF

PLOTTED: 3/17/2020 5:50:26 PM
D400530

SYSTEM CODE ABBREVIATIONS

AA	AIR-AERATION
ACE	ACETIC ACID
ACT	ACETYLENE
GAC	ACTIVATED CARBON - GRANULAR
AIR	PROCESS AIR
AER	AERATION SYSTEM
IA	AIR, INSTRUMENT
ARW	AIR WASH
ALS	ALUMINUM SULFATE
NSO4	AMMONIUM SULFATE
NH3	ANHYDROUS AMMONIA
AS	ANTI-SEALANT
ANTI	ANTISCALANT
NHOH	AQUA AMMONIA
ARG	ARGON
ASH	ASH
BWH	BACKWASH - MEMBRANE/FILTER
BAL	BALLASTED FLOCCULATION
BIO	BIOSOLIDS
BIT	BIOTOWER
BLS	BLENDED SLUDGE
BNR	BNR
BRN	BRINE
CA	CITRIC ACID
CAL	CALCITE
CACL	CALCIUM HYPOCHLORITE
CATS	CALCIUM THIOSULFATE
C02	CARBON DIOXIDE
CAS	CARBON SLURRY
HCO3	CARBONIC ACID
CEN	CENTRATE
CEB	CHEMICAL ENHANCED BACKWASH - MEMBRANE
CL2	CHLORINE
CLO2	CHLORINE DIOXIDE
CA	CITRIC ACID
CIP	CLEAN IN PLACE
COA	COAGULATION
CAI	COMPRESSED AIR - INSTRUMENT
CMS	COMPRESSED AIR - SERVICE
CUS	COPPER SULFATE
CI	CORROSION INHIBITOR
DCL	DECHLORINATION
DET	DETERGENT
DWT	DEWATERING
FUE	DIESEL FUEL
DGG	DIGESTER GAS
DGM	DIGESTER GAS MIXING
DGS	DIGESTER SLUDGE
DGA	DIGESTION - AEROBIC
DIG	DIGESTION - ANAEROBIC
DCB	DISINFECTION CONTACT BASIN
DAF	DISSOLVED AIR FLOTATION
DRN	DRAINAGE
DWT	DEWATERING
EFP	EFFLUENT PUMPING
EXH	ENGINE EXHAUST
EQB	EQUALIZATION BASIN
FEC	FERRIC CHLORIDE
FES	FERRIC SULFATE
FRC	FERROUS CHLORIDE
FRS	FERROUS SULFATE
FLT	FILTRATION
FSW	FILTER SOLIDS WASTE
FUE	DIESEL FUEL
FLC	FLOCCULATION
GOX	GASEOUS OXYGEN
GSL	GASOLINE
GEN	GENERATOR
GRS	GREASE
GRT	GRIT
HSO4	SULFURIC ACID
HEL	HELIUM
HFL	HYDRAULIC FLUID
HCL	HYDROCHLORIC ACID
HFS	HYDROFLUOSILIC ACID (FLUORIDE)
HYD	HYDROGEN
PER	HYDROGEN PEROXIDE
IA	AIR, INSTRUMENT
INC	INCINERATION
INFP	INFLUENT PUMPING
INT	INTAKE
LAG	LAGOON STORAGE
LAP	LAND APPLICATION
LAS	LIQUID AMMONIA SULFATE
CAH	LIME - HYDRATED
CAO	LIME - QUICKLIME
LIM	LIME STABILIZATION
LOX	LIQUID OXYGEN
LPG	LP GAS OR PROPANE GAS
MGOH	MAGNESIUM HYDROXIDE
MEM	MEMBRANE
MEG	METHANE GAS
MTH	METHANOL
MXL	MIXED LIQUOR
NACL	SODIUM HYPOCHLORITE
NAOH	SODIUM HYDROXIDE
NG	NATURAL GAS
NHS	SODIUM BISULFATE
NIT	NITROGEN
NIO	NITROUS OXIDE
NOCL	SODIUM HYPOCHLORITE
NPW	NON-POTABLE WATER
ODC	ODOR CONTROL
OIL	OIL
FO	OIL - FUEL
OZN	OZONE
OZD	OZONE DESTRUCT
PPP	PHOSPHATE
PO4	PHOSPHORIC ACID
PCL	POLYALUMINUM CHLORIDE
POLF	POLYMER
KMN	POTASSIUM PERMANGANATE
PAC	POWDERED ACTIVATE CARBON
PAR	PRE-AERATION
PSD	PRESEDIMENTATION
PRC	PRIMARY CLARIFICATION
PRS	PRIMARY SLUDGE
POLY	POLYMER
PRW	PLANT RECYCLED WATER
WWP	RAW WASTEWATER PUMPING
RWP	RAW WATER PUMPING
RWS	RAW WATER STORAGE
RCS	RECIRCULATED SLUDGE
RCW	RECLAIMED WATER
REF	REFRIGERANT
RES	RESIDUALS
RAS	RETURN ACTIVATED SLUDGE
RO	REVERSE OSMOSIS
SAN	SANITARY SYSTEM
SCR	SCREENINGS
SCM	SCUM
SCL	SECONDARY CLARIFICATION
SEP	SEPTAGE
SET	SETTLED WATER
SEW	SEWAGE
NAC	SODA ASH
NAL	SODIUM ALUMINATE
NAM	SODIUM ALUMINATE
NBC	SODIUM BICARBONATE
NHS	SODIUM BISULFITE
NCL	SODIUM CHLORIDE
NCL2	SODIUM CHLORITE
NAF	SODIUM FLUORIDE
NAX	SODIUM HEXAMETAPHOSPHATE
NAOH	SODIUM HYDROXIDE
NOCL	SODIUM HYPOCHLORITE
NASF	SODIUM SILICOFLUORIDE
STM	STEAM
STS	STORM SEWER
STW	STORM WATER
SO2	SULFUR DIOXIDE
HSO4	SULFURIC ACID
SW	SURFACE WASH
TERT	TERTIARY TREATMENT
TPRS	THICKENED PRIMARY SLUDGE
TWAS	THICKENED WASTE ACTIVATED SLUDGE
THCK	THICKENING
TW	TREATED WATER
TF	TRICKLING FILTER
UV	ULTRAVIOLET
VAC	VACUUM
WW	WASH WATER
WAS	WASTE ACTIVATED SLUDGE
WWW	WASTE WASH WATER
CDW	WATER - CONDENSATE
COLW	WATER - COOLING
DW	WATER - DISTILLED WATER
FPW	WATER - FIRE PROTECTION
IRW	WATER - IRRIGATION
OZW	WATER - OZONATED
SWT	WATER - SEAL
HW	WATER - WATER HEATING
DEIW	WATER DEIONIZED
NPW	WATER NON-POTABLE
PEW	WATER PLANT EFFLUENT
PW	WATER POTABLE
RW	WATER RAW
WWT	WET WEATHER TREATMENT
ZOP	ZINC ORTHOPHOSPHATE
PRW	PLANT RECYCLED WATER

PROCESS CODE ABBREVIATIONS

AA_X	AIR-AERATION
ANTI_X	ANTISCALANT
AS_X	AIR-SCOUR
ATS_X	AUTOMATIC TRANSFER SWITCH
AWS_X	AERATED WAS
CA_X	CITRIC ACID
CAKE_X	DEWATERED SLUDGE CAKE
CHANNEL_X	PROCESS CHANNEL
CIP_X	CLEAN IN PLACE
CIPR_X	REVERSE OSMOSIS CIP RETURN
CIPS_X	REVERSE OSMOSIS CIP SUPPLY
D_X	DRAIN
DRN_X	DRAIN
FA_X	FOUL AIR
FIW_X	FILTER INLET WASH
FBW_X	FILTER BACKWASH
FF_X	REVERSE OSMOSIS FORWARD FLUSH
FO_X	FIBER OPTIC
FOW_X	FILTERED OUTFALL WATER
FSCM_X	FILTER SCUM
FSW_X	FILTER SOLIDS WASTE
GEN_X	GENERATOR FUEL
IA_X	INSTRUMENT AIR
IPR_X	INDIRECT POTABLE REUSE WATER
LAS_X	LIQUID AMMONIA SULFATE
MFF_X	MICROFILTRATION FILTRATE
ML_X	MIXED LIQUOR
NAOH_X	SODIUM HYDROXIDE
NHS_X	SODIUM BISULFATE
NOCL_X	SODIUM HYPOCHLORITE
NPW_X	NON-POTABLE WATER
OF_X	OVERFLOW
PCR_X	REVERSE OSMOSIS PERMRATE
PEW_X	PLANT EFFLUENT WATER
POLY_X	POLYMER
POW_X	PLANT OUTFALL WATER
PRW_X	PLANT RECYCLED WATER
RAS_X	RETURNED ACTIVATED SLUDGE
RCW_X	RECLAIMED WATER
ROC_X	REVERSE OSMOSIS CONCENTRATE
ROF_X	REVERSE OSMOSIS FEED
ROP_X	REVERSE OSMOSIS PERMEATE
SA_X	SULFURIC ACID
SAN_X	SANITARY SEWER
STW_X	STORM WATER
UVE_X	ULTRAVIOLET TREATMENT EFFLUENT
WAS_X	WASTE ACTIVATED SLUDGE
WWR_X	WASTEWATER-RAW
WWS_X	WASTEWATER-SCREENED

X = PROCESS CODE SUFFIX USED TO FURTHER SPECIFY A PROCESS STREAM
(I.E. CL2_G FOR CHLORINE GAS OR CL2_S FOR CHLORINE SOLUTION)

FUNCTION CODE ABBREVIATIONS

ACMB	ACTIVATION CHAMBER
ACD	AERATOR, COARSE BUBBLE DIFFUSED
AEFD	AERATOR, FINE PORE DIFFUSED
AFS	AERATOR, FLOATING SURFACE
AES	AERATOR, SURFACE
AFC	AFTERCOOLER
AD	AIR DRYER
AF	AIR FILTER
AR	AIR RECEIVER OR REGULATOR
AS	AIR SEPARATOR
AST	AIR STRIPPER
ATS	AUTOMATIC TRANSFER SWITCH
BFP	BACKFLOW PREVENTER
BSNA	BASIN, AERATION
BSNX	BASIN, ANOXIC/OXIC
BNR	BASIN, BNR
BSNC	BASIN, CHLORINE CONTACT
BSNO	BASIN, OXIC
RBSN	BASIN, RECTANGULAR SEDIMENTATION
BFPS	BELT FILTER PRESS
B	BIN (STORAGE - ALL TYPES)
BA	BIN ACTIVATOR
BLC	BLOWER, CENTRIFUGAL
BL	BLOWER, POSITIVE DISPLACEMENT
BLR	BOILER
BDZ	BULLDOZER
CAT6	CATEGORY 6 METALLIC CABLE
CCLM	CALIBRATION COLUMN
CFG	CENTRIFUGE
CGR	CLASSIFIER, GRIT
CHF	CHEMICAL FEEDER
CGS	CHLORINE GAS SCRUBBER
PCLR	CLARIFIER, PRIMARY
SCLR	CLARIFIER, SECONDARY
CGR	CLASSIFIER, GRIT
CW	CLEARWELL
CMP	COMPRESSOR
CMB	COMPRESSOR, LIQUID RING
CMR	COMPRESSOR, ROTARY SCREW
CMPS	COMPRESSOR, STEAM
CTR	CONTAINER, PROCESS
COB	CONVEYOR, BELT
COS	CONVEYOR, SCREW
CFA	COVER, ALUMINUM DOME BASIN
CFD	COVER, FIXED DIGESTER
CFL	COVER, FLOATING DIGESTER
DCG	COVER, GAS HOLDER
DCM	COVER, MEMBRANE
CRN	CRANE
CRG	CRANE, GANTRY
CRJ	CRANE, JIB
CRP	CRANE, PORTABLE GANTRY
CRT	CRANE, TRAVELLING BRIDGE
CYL	CYLINDER, CHLORINE
CYG	CYLINDER, GAS
DWS	DEWATERING SCREW
DPS	DIAPHRAGM SEAL
DIF	DIFFUSER, CHANNEL
DFB	DIFFUSER BANK
DIP	DIFFUSER, PIPELINE
DIR	DIFFUSER, TANK
DGE	DIGESTER, AEROBIC
DGAP	DIGESTER, ANAEROBIC PRIMARY
DGAS	DIGESTER, ANAEROBIC SECONDARY
DSUV	DISINFECTION UNIT, UV
DAF	DISSOLVED AIR FLOTATION THICKENER
DUC	DUST COLLECTOR
EDC	EDUCTOR
EQPE	ELECTRICAL EQUIPMENT, GENERAL
EWSH	EMERGENCY EYE WASH FOUNTAIN
ES	ETHERNET SWITCH
ESHR	EMERGENCY SHOWER
EMEW	EMERGENCY SHOWER & EYEWASH
EQPB	EQUIPMENT, BUILDING SERVICES
EQPT	EQUIPMENT, GENERAL OR UNSPECIFIED
EV	EVAPORATOR
EXC	EXPANSION CHAMBER
FAX	FAN, AXIAL FLOW
FAN	FAN, CENTRIFUGAL
FO	FIBER OPTIC CABLE
FPP	FIBER PATCH PANEL
FRWL	FIREWALL
FST	FENCE STIRRER
FTSP	FILTER GAS PARTICULATE
FLC	FILTER, CARTRIDGE TYPE
FLT	FILTER, UNDERDRAINS OR PRESSURE
FSW	FILTER, SURFACE WASH EQUIPMENT
FTTNG	FITTING, MISCELLANEOUS
FAR	FLAME ARRESTER
FC	FLAME CHECK
FLCH	FLOCCULATOR, HORIZONTAL
FLCV	FLOCCULATOR, VERTICAL
FD	FLOOR DRAIN
FS	FLOW SPLITTER
FE	FLUME, PARSHALL
FMSP	FOAM SEPARATOR
FL	FORKLIFT
CHF	GAS FEEDER
GF	GAS FLARE
GWH	GAS WATER HEATER
GFL	GATE, FLAP
GSD	GATE, SLIDE
GSC	GATE, SLUICE
G	GATE, WEIR
GEN	GENERATOR, ENGINE (BACKUP POWER)
GBT	GRAVITY BELT THICKENER
GVT	GRAVITY THICKENER
GRD	GRINDER PULVERIZER
GRB	GRIT BASIN, VORTEX TYPE
GRV	GRIT SCREW CONCENTRATOR
HEX	HEAT EXCHANGER
HMI	HUMAN-MACHINE INTERFACE
HST	HOIST
HSC	HOIST, CHAIN
HSE	HOIST, WIRE ROPE
HYDF	HYDRANT, FIRE
HYDW	HYDRANT, WALL
HYC	HYDROCYCLONE
INJ	INJECTOR, CHEMICAL
KMM	KEYBOARD, MONITOR, MOUSE
LS	LIME SLAKER
LP	LIGHTING PANEL
LSP	LOCAL START PANEL
MCC	MOTOR CONTROL CENTER
MFM	MEMBRANE
MBMF	MEMBRANE, MICROFILTRATION
MBNF	MEMBRANE, NANOFILTRATION
MBRO	MEMBRANE, REVERSE OSMOSIS
MBUF	MEMBRANE, ULTRAFILTRATION
MXC	MIXER, CARBON
FLM	MIXER, FLOCCULATION
M	MOTOR
MCC	MOTOR CONTROL CENTER
MXI	MIXER, IN-LINE
MXPG	MIXER, PUGMILL
MXR	MIXER, RAPID
MXS	MIXER, STATIC
MXP	MIXER, SUBMERSIBLE, PROP OR BLENDER
MM	MUFFIN MONSTER
OIT	OPERATOR INTERFACE
ORD	OVERFLOW ROOF DRAIN
ODU	OZONE DESTRUCT UNIT
OGEN	OZONE GENERATOR
PLC	PROGRAMMABLE LOGIC CONTROLLER
PSU	OZONE POWER SUPPLY UNIT
PP	PACKAGED PLANT
PCN	PARTICLE COUNTER
PLT	PELLETIZER
PS	PENSTOCK
PIPE	PIPE
PSE	PLATE SETTLER
INJ	POLYMER INJECTOR RING
PP	POWER PANEL
PBC	PRESSURE BUILDING COIL
PD	PULSATION DAMPNER
PAD	PUMP, AIR DIAPHRAGM
PCL	PUMP, CENTRIFUGAL
PDM	PUMP, DIAPHRAGM METERING
PHW	PUMP, HEATING WATER
PHE	PUMP, HORIZONTAL END SUCTION
PSC	PUMP, HORIZONTAL SPLIT CASE
PPS	PUMP, PERISTALTIC
PPL	PUMP, PLUNGER
PPC	PUMP, PROGRESSING CAVITY
PSE	PUMP, SCREW ENCLOSED
PSE	PUMP, SCREW OPEN
PCL	PUMP, SUBMERSIBLE
PCH	PUMP, SUBMERSIBLE CHOPPER
PSS	PUMP, SUBMERSIBLE SUMP
PSP	PUMP, SUMP
P	PUMP, GENERAL OR UNSPECIFIED
PVD	PUMP, VERTICAL DIFFUSION VANE
PVE	PUMP, VERTICAL END SUCTION
PVW	PUMP, VERTICAL WET PIT
RSV	RESERVOIR
RCO	RESIDUAL COLLECTOR
RM	ROTAMETER
RD	RUPTURE DISK
RTR	ROUTER
SAMP	SAMPLER
SCL	SCALE
SC	SCALE, WEIGHT
SCRHT	SCREEN, HORIZONTAL
SCRI	SCREEN, INLINE SLUDGE
SCRA	SCREEN, MANUAL OR MECH CLEANED BAR
SCRS	SCREEN, STEP
SCT	SCREEN, TRAVELLING WATER
SCR	SCREEN, VIBRATORY
SCU	SCRUBBER
SMC	SCUM COLLECTOR
SCW	SCUM WEIR - ROTATING
SEP	SEPARATOR, MOISTURE OR CYCLONE
SGT	SIGHT GLASS - TALL
SG	SIGHT GAUGE
SIL	SILENCER
SLC	SLUDGE COLLECTOR, CIRCULAR
GCLR	SLUDGE COLLECTOR, CROSS
SFC	SLUDGE COLLECTOR, FLOC-CLARIFYING
SCS	SLUDGE COLLECTOR, SEC CLARIFIERS
SSC	SLUDGE COLLECTOR, SOLIDS CONTACT
SLCS	SLUDGE COLLECTOR, STRAIGHT LINE
GRD	SLUDGE GRINDER, INLINE OR CHANNEL
SBL	SOLIDS BLENDER-INLINE
STR	STRAINER
STRB	STRAINER BASKET TYPE
STRY	STRAINER Y TYPE
SRCH	SURGE CHAMBER
SRVR	SERVER
SWB	SWITCH BOARD
TSA	TANK, ABOVE GROUND STORAGE
TCN	TANK, AMMONIA STORAGE
TCR	TANK, CRYOGENIC STORAGE
DWT	TANK, DOUBLE WALL
TSE	TANK, ELEVATED STORAGE
TX	TANK, EXPANSION
TNK	TANK, FRP CHEMICAL STORAGE
TNK	TANK, GENERAL OR UNSPECIFIED
TCP	TANK, METHANOL
SMPT	TANK, SAMPLER
TCS	TANK, CHLORINE CONTACTOR
TSW	TANK, FLAT TOP STEEL WATER
XFR	TRANSFORMER
TRP	TRAP, DRIP
TRPS	TRAP, SEDIMENT
TRK	TRUCK
TB	TURBINE
TBC	TURBINE COMPRESSOR
TBG	TURBINE ENGINE
UPS	UNINTERRUPTABLE POWER SUPPLY
UVE	UV REACTOR
UVL	UV REACTOR, HORIZONTAL OR VERTICAL
VB	VACUUM BREAK
VJTR	VACUUM EJECTOR
VRG	VACUUM REGULATOR
AVR	VALVE, AIR RELEASE
AVRV	VALVE, AIR-VACUUM
VAG	VALVE, ANGLE
VBM	VALVE, AWWA BALL
VBF	VALVE, AWWA BUTTERFLY
VBFP	VALVE, BACKFLOW PREVENTER
VBM	VALVE, BALL MISCELLANEOUS
VCK	VALVE, CHECK
VCN	VALVE, CONE
VDG	VALVE, DIAPHRAGM OPERATED
VGD	VALVE, DOUBLE DISC GATE
VPE	VALVE, ECCENTRIC PLUG
VER	VALVE, EXPLOSION RELIEF
VFW	VALVE, FOUR WAY
VG	VALVE, GATE
V	VALVE, GENERAL OR UNSPECIFIED
VGL	VALVE, GLOBE
VBI	VALVE, INDUSTRIAL BUTTERFLY
VKG	VALVE, KNIFE GATE
VMR	VALVE, MATERIAL HANDLING ROTARY
VMD	VALVE, MUD
VND	VALVE, NEEDLE
PTV	VALVE, PILOT
VPN	VALVE, PINCH
VPO	VALVE, PISTON OPERATED
VPL	VALVE, NON-ECCENTRIC PLUG
VPC	VALVE, PRESSURE REDUCING
VPC	VALVE, PRESSURE SUSTAINING
VSP	VALVE, PRESSURE RELIEF
VSPV	VALVE, PRESSURE/VACUUM RELIEF
VP	VALVE, PROCESS
VGR	VALVE, RESILIENT SEATED GATE
VS	VALVE, SAFETY
VSLV	VALVE, SLEEVE
VSL	VALVE, SOLENOID
VTV	VALVE, TELESCOPING
VTS	VALVE, THERMAL SHUTOFF
VTW	VALVE, THREE WAY
VVB	VALVE, VACUUM BREAKER
VSV	VALVE, VACUUM RELIEF
VVP	VALVE, V-PORT BALL
VAP	VAPORIZER
VFD	VARIABLE FREQUENCY DRIVE
VSLB	VESSEL, BOOT
WC	WEIR, CIPOLETTI
WR	WEIR, RECTANGULAR
WV	WEIR, V-NOTCH
WLHC	WELL, HORIZONTAL COLLECTOR
WLV	WELL, VERTICAL

90% SUBMITTAL- NOT FOR CONSTRUCTION

NO.	BY	CHK	APP	DATE	REVISIONS AND RECORD OF USE
A	BLB	TAH	EVB	7/30/2019	60% SUBMITTAL

REGISTERED PROFESSIONAL ENGINEER
BRIAN L. BUTLER
No. E 16569
ELECTRICAL
STATE OF CALIFORNIA

BLACK & VEATCH

JOINT VENTURE

BLACK & VEATCH

FILANC

CITY OF MORRO BAY
FILANC BLACK & VEATCH DB PROPOSAL
MORRO BAY WRF

LEGEND & ABBREVIATIONS
P&ID
SHEET 3

DESIGNED: BLB
DETAILED: PVR
CHECKED: TAH
APPROVED:
DATE:

0 1/2 1
IF THIS BAR DOES NOT MEASURE 1" THEN DRAWING IS NOT TO FULL SCALE

PROJECT NO.
400530

00-I-003
SHEET
OF

PLOTTED: 3/17/2020 5:51:50 PM
D400530

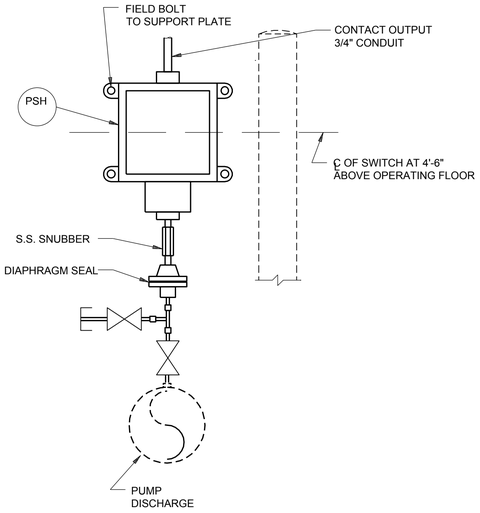

PRESSURE SWITCH
INSTALLATION DETAIL
NO SCALE

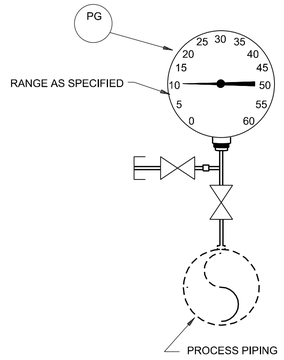

PRESSURE GAUGE
INSTALLATION DETAIL
NO SCALE

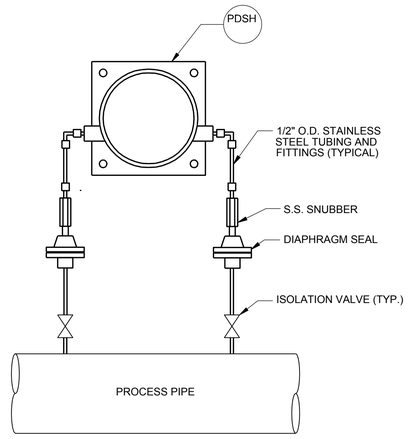

DIFFERENTIAL PRESSURE SWITCH
INSTALLATION DETAIL
NO SCALE

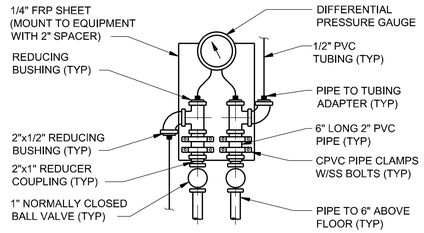

PRESSURE DIFFERENTIAL INDICATOR
INSTALLATION DETAIL
NO SCALE

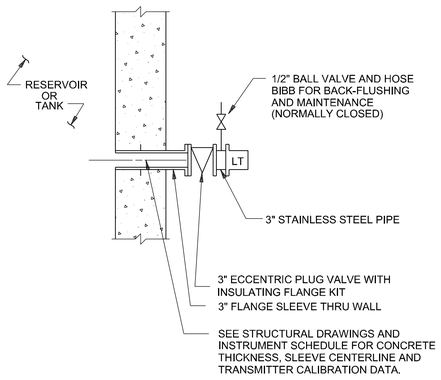

FLANGE MOUNTED PRESSURE SENSING
LEVEL TRANSMITTER INSTALLATION DETAIL
NO SCALE

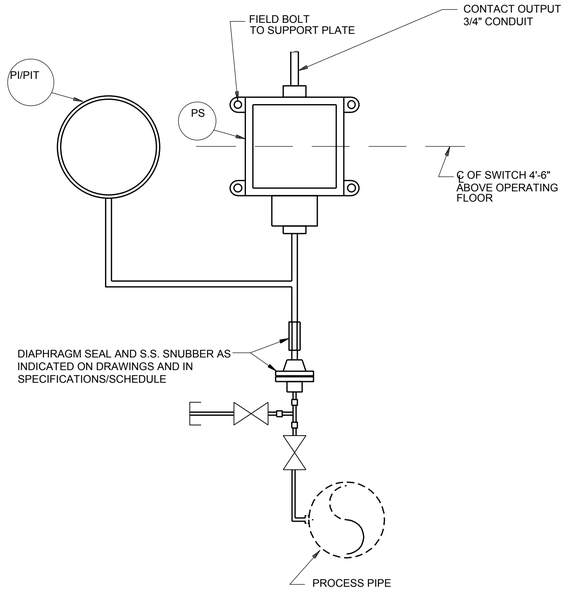

PRESSURE SWITCH & GAUGE/TRANSMITTER
INSTALLATION DETAIL
NO SCALE

90% SUBMITTAL - NOT FOR CONSTRUCTION

NO.	BY	CHK	APP	DATE	REVISIONS AND RECORD OF USE

No. E 16569

BLACK & VEATCH
JOINT VENTURE
BLACK & VEATCH
FILANC

CITY OF MORRO BAY
FILANC B&V DB PROP
MORRO BAY WRF

INSTALLATION DETAIL 1

DESIGNED: BLB
DETAILED: PVR | VM
CHECKED: TAH
APPROVED:
DATE:

0 1/2 1
IF THIS BAR DOES NOT MEASURE 1" THEN DRAWING IS NOT TO FULL SCALE

PROJECT NO.
400530

00-I-501
SHEET
XX OF XX

RAN64017, 13-03-2020 09:34:00
RAN64017, 13-03-2020 09:34:37
RAN64017

D400530

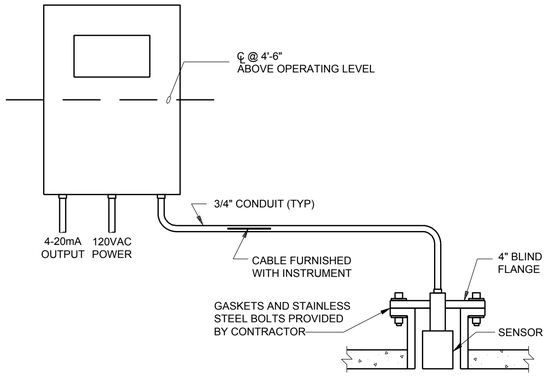

ULTRASONIC LEVEL TRANSMITTER
INSTALLATION DETAIL

NO SCALE TYPICAL FOR:

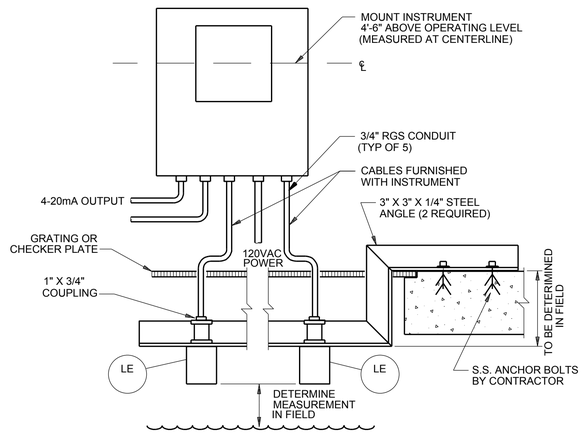

ULTRASONIC DIFFERENTIAL LEVEL TRANSMITTER
INSTALLATION DETAIL

NO SCALE
COORDINATE LOCATION OF TRANSDUCERS WITH GRATING CUTOUT

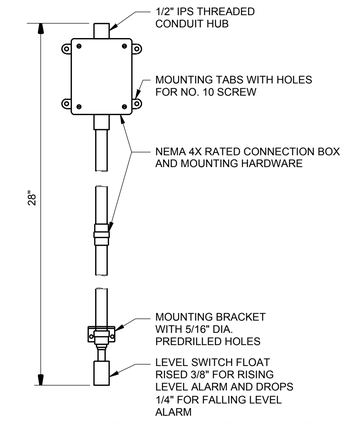

WALL MOUNTED FLOOD LEVEL SWITCH
INSTALLATION DETAIL

NO SCALE

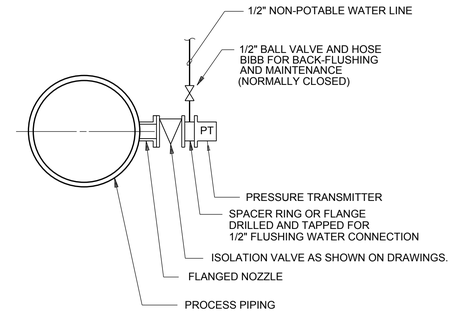

FLANGE MOUNTED PRESSURE TRANSMITTER
INSTALLATION DETAIL

NO SCALE

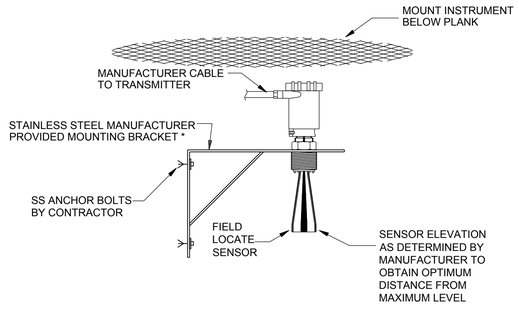

RADAR TYPE LEVEL TRANSMITTER
INSTALLATION DETAIL

NO SCALE

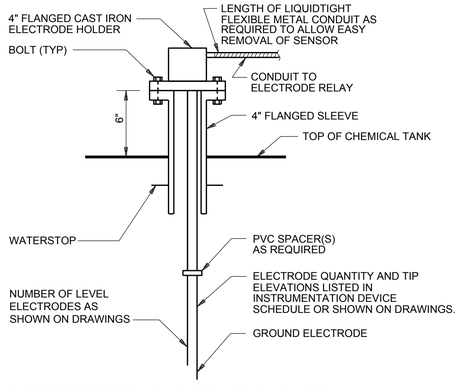

ELECTRODE RELAY TYPE LEVEL SWITCH,
ELETRODE INSTALLATION DETAIL

NO SCALE

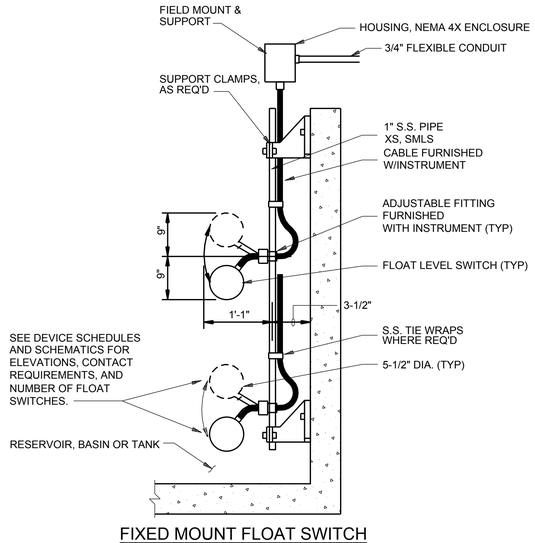

FIXED MOUNT FLOAT SWITCH
INSTALLATION DETAIL

NO SCALE

90% SUBMITTAL - NOT FOR CONSTRUCTION

NO.	BY	CHK	APP	DATE	REVISIONS AND RECORD OF USE

BLACK & VEATCH
JOINT VENTURE
FILANC
BLACK & VEATCH

CITY OF MORRO BAY
FILANC B&V DB PROP
MORRO BAY WRF

INSTALLATION DETAIL 2

DESIGNED: BLB
DETAILED: PVR / VM
CHECKED: TAH
APPROVED:
DATE:

0 1/2 1
IF THIS BAR DOES NOT MEASURE 1" THEN DRAWING IS NOT TO FULL SCALE

PROJECT NO.
400530

00-I-502
SHEET
XX OF XX

RAN84017, 13-03-2020 09:32:33
RAN84017, 13-03-2020 09:33:09
RAN84017
D400530

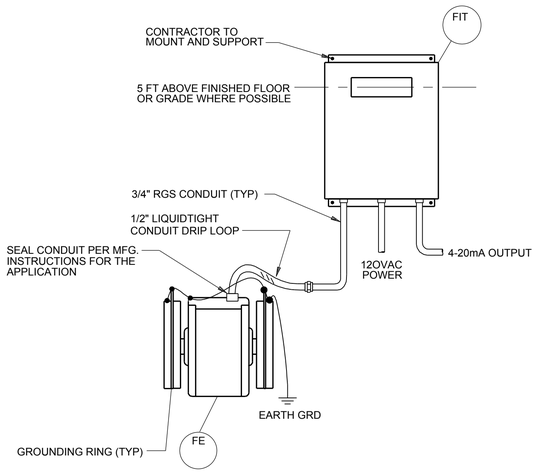

MAGNETIC FLOWMETER INSTALLATION DETAIL

NO SCALE

NOTE: PIPE TO BE SUPPORTED ON BOTH SIDES OF METER.

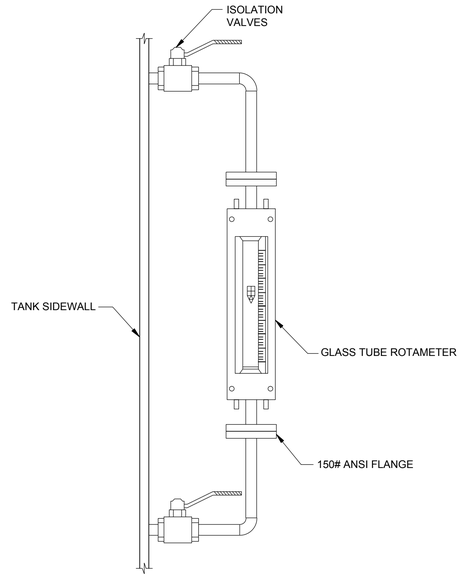

LIQUID SERVICE ROTAMETER INSTALLATION DETAIL

NO SCALE

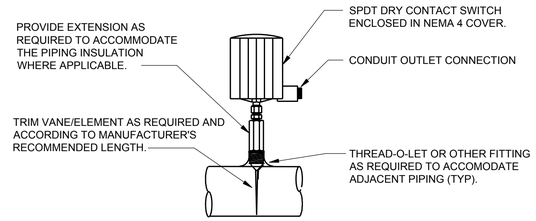

TARGET-TYPE FLOW SWITCH INSTALLATION DETAIL

NO SCALE

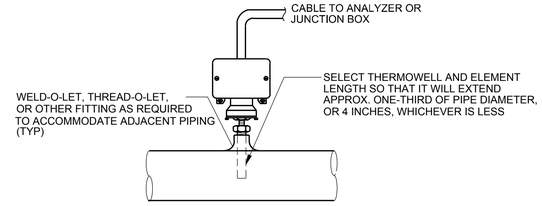

LOW TEMPERATURE SWITCH INSTALLATION DETAIL

NO SCALE

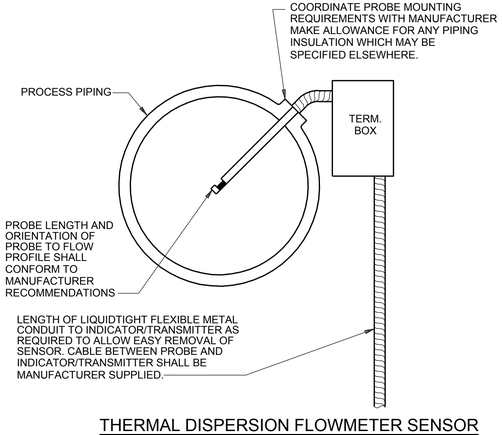

THERMAL DISPERSION FLOWMETER SENSOR INSTALLATION DETAIL

NO SCALE

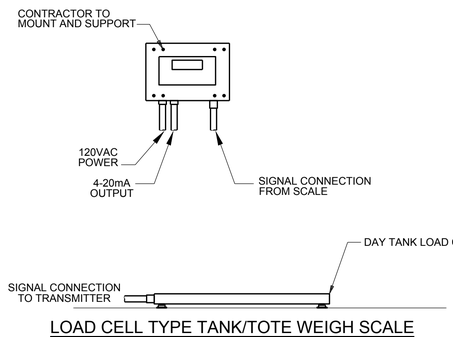

LOAD CELL TYPE TANK/TOTE WEIGH SCALE INSTALLATION DETAIL

NO SCALE

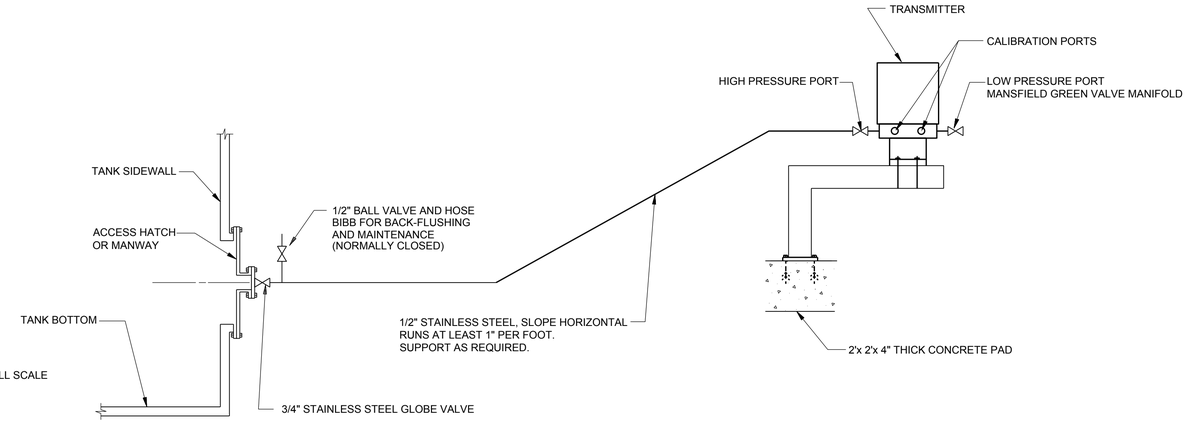

FLANGE MOUNTED PRESSURE SENSING LEVEL TRANSMITTER INSTALLATION DETAIL

NO SCALE

NO.	BY	CHK	APP	DATE	REVISIONS AND RECORD OF USE

No. E 16569
REGISTERED PROFESSIONAL ENGINEER
CALIFORNIA

BLACK & VEATCH

JOINT VENTURE

BLACK & VEATCH

FILANC

CITY OF MORRO BAY
FILANC B&V DB PROP
MORRO BAY WRF

INSTALLATION DETAIL 3

DESIGNED:	BLB
DETAILED:	PVR / VM
CHECKED:	TAH
APPROVED:	
DATE:	

0 1/2 1

IF THIS BAR DOES NOT MEASURE 1" THEN DRAWING IS NOT TO FULL SCALE

PROJECT NO.
400530

00-I-503
SHEET
XX OF XX

90% SUBMITTAL - NOT FOR CONSTRUCTION

RAN84017, 13.03.2020 09:31:05
RAN84017, 13.03.2020 09:31:49
RAN84017

D400530

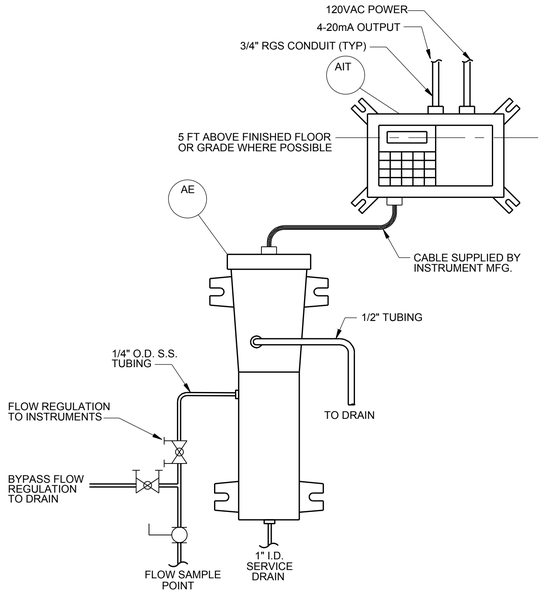

TURBIDITY METER
INSTALLATION DETAIL
NO SCALE

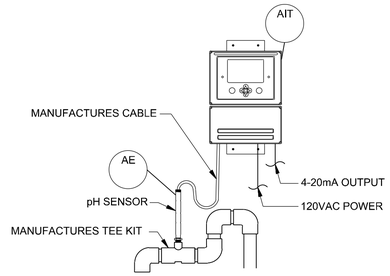

pH SENSOR
INSTALLATION DETAIL
NO SCALE

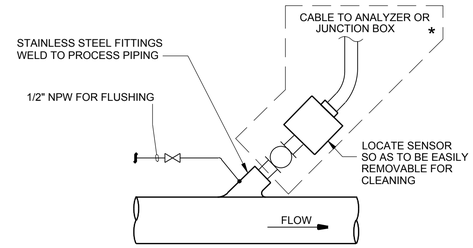

TSS PROBE
INSTALLATION DETAIL
NO SCALE

CONTRACTOR TO COORDINATE PIPE FITTING WITH HOT TAP ASSEMBLY PROVIDED WITH INSTRUMENT.

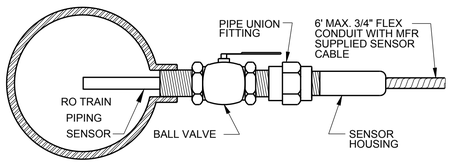

PH, ORP, CONDUCTIVITY SENSOR (INLINE TYPE)
INSTALLATION DETAIL
NO SCALE

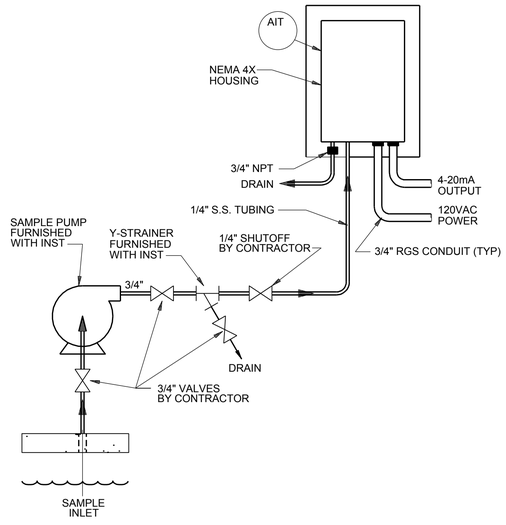

RESIDUAL CHLORINE ANALYZER
INSTALLATION DETAIL
NO SCALE

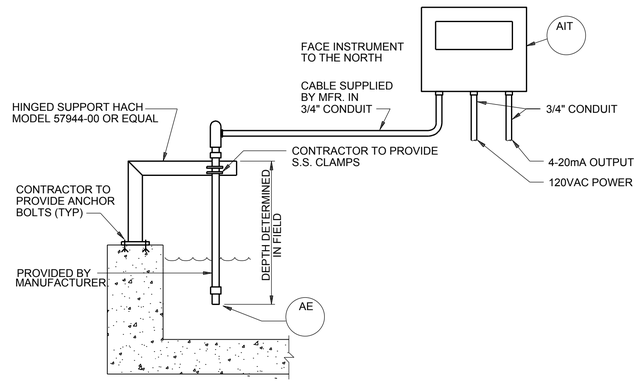

AERATION BASIN MLSS, ORP, & NITRATE
INSTALLATION DETAIL
NO SCALE

NO.	BY	CHK	APP'D	DATE	REVISIONS AND RECORD OF USE

BLACK & VEATCH
JOINT VENTURE
FILANC

CITY OF MORRO BAY
FILANC B&V DB PROP
MORRO BAY WRF

INSTALLATION DETAIL 4

DESIGNED: BLB
DETAILED: PVR / VM
CHECKED: TAH
APPROVED:
DATE:

0 1/2 1
IF THIS BAR DOES NOT MEASURE 1" THEN DRAWING IS NOT TO FULL SCALE

PROJECT NO.
400530

00-I-504
SHEET
XX OF XX

90% SUBMITTAL - NOT FOR CONSTRUCTION

RAN84017, 13.03.2020 09:29:46
RAN84017, 13.03.2020 09:30:21
RAN84017
D400530

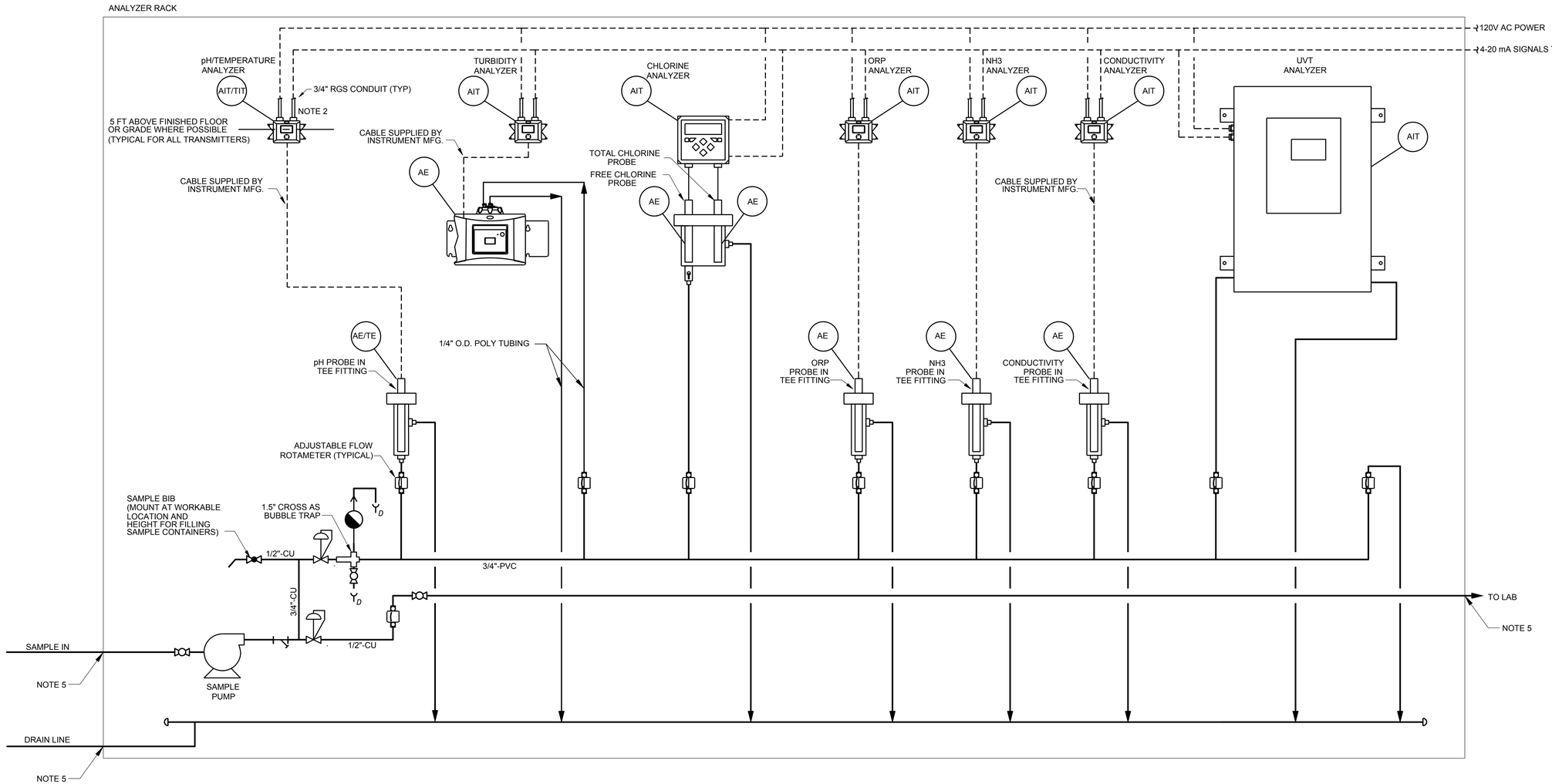

ANALYZER PANEL NAME	TEMP	pH	ORP	NH3	TURBIDITY	TOTAL CHLORINE	FREE CHLORINE	CONDUCTIVITY	UVT	PUMP	NOTES
MBR BASIN 1 FILTRATE ANALYZER PANEL					32-MEM-AIT-1001					32-MEM-P-0001	
MBR BASIN 2 FILTRATE ANALYZER PANEL					32-MEM-AIT-2001					32-MEM-P-0002	
MBR FILTRATE MANIFOLD ANALYZER PANEL NO.1				32-MEM-AIT-0001							
MBR FILTRATE MANIFOLD ANALYZER PANEL NO.2					32-MEM-AIT-0002					32-MEM-P-0003	
RO FEED ANALYZER PANEL		51-RO-AIT-0006	51-RO-AIT-0003	51-RO-AIT-0005	51-RO-AIT-0002		51-RO-AIT-0004	51-RO-AIT-0001		51-RO-P-0001	
UV/AOP ANALYZER PANEL		52-UV-AIT-0002 52-UV-AIT-0007				52-UV-AIT-0001 52-UV-AIT-0003 52-UV-AIT-0009	52-UV-AIT-0004 52-UV-AIT-0008		52-UV-AIT-0005 52-UV-AIT-0006		
PRODUCT WATER FTE ANALYZER PANEL		63-TW-AIT-0003					63-TW-AIT-0001	63-TW-AIT-0002			
DECLHORINATION ANALYZER PANEL							65-TW-AIT-0001				
RO FEED MANIFOLD ANALYZER PANEL NO. 1				33-RO-AIT-0001			65-TW-AIT-0004				

NOTES:
1. ASSOCIATED FITTINGS AND TUBING ARE NOT NECESSARY IF ANALYZER OR PUMP IS NOT INCLUDED IN TABLE.
2. REPRESENTS TWO 4-20 mA SIGNALS. ONE FOR pH AND ONE FOR TEMPERATURE.
3. INSTRUMENT AIR MUST BE DRY AND OIL AND DUST FREE.
4. DETAILED DRAWINGS SHALL BE SUBMITTED FOR REVIEW AND APPROVAL PRIOR TO FABRICATION.
5. FIELD PIPING/TUBING CONNECTIONS ARE MADE WITH A FITTING ON EDGE OF THE PANEL.

90% SUBMITTAL - NOT FOR CONSTRUCTION

NO.	BY	CHK	APP
B	BLB	TAH	EVB
A	BLB	TAH	EVB

DATE	REVISIONS AND RECORD OF USE
7-30-2019	60% SUBMITTAL
3-5-2019	30% SUBMITTAL

No. E 16569

BLACK & VEATCH
JOINT VENTURE
BLACK & VEATCH
FILANC

CITY OF MORRO BAY
FILANC B&V DB PROP
MORRO BAY WRF

INSTRUMENTATION
WATER QUALITY STATION DETAIL

DESIGNED: BLB
DETAILED: PVR / VM
CHECKED: TAH
APPROVED:
DATE:

0 1/2 1
IF THIS BAR DOES NOT MEASURE 1" THEN DRAWING IS NOT TO FULL SCALE

PROJECT NO.
400530

00-I-505
SHEET
XX OF XX

RAN64017, 13.03.2020 15:52:45
RAN64017, 13.03.2020 15:53:35
RAN64017
D400530

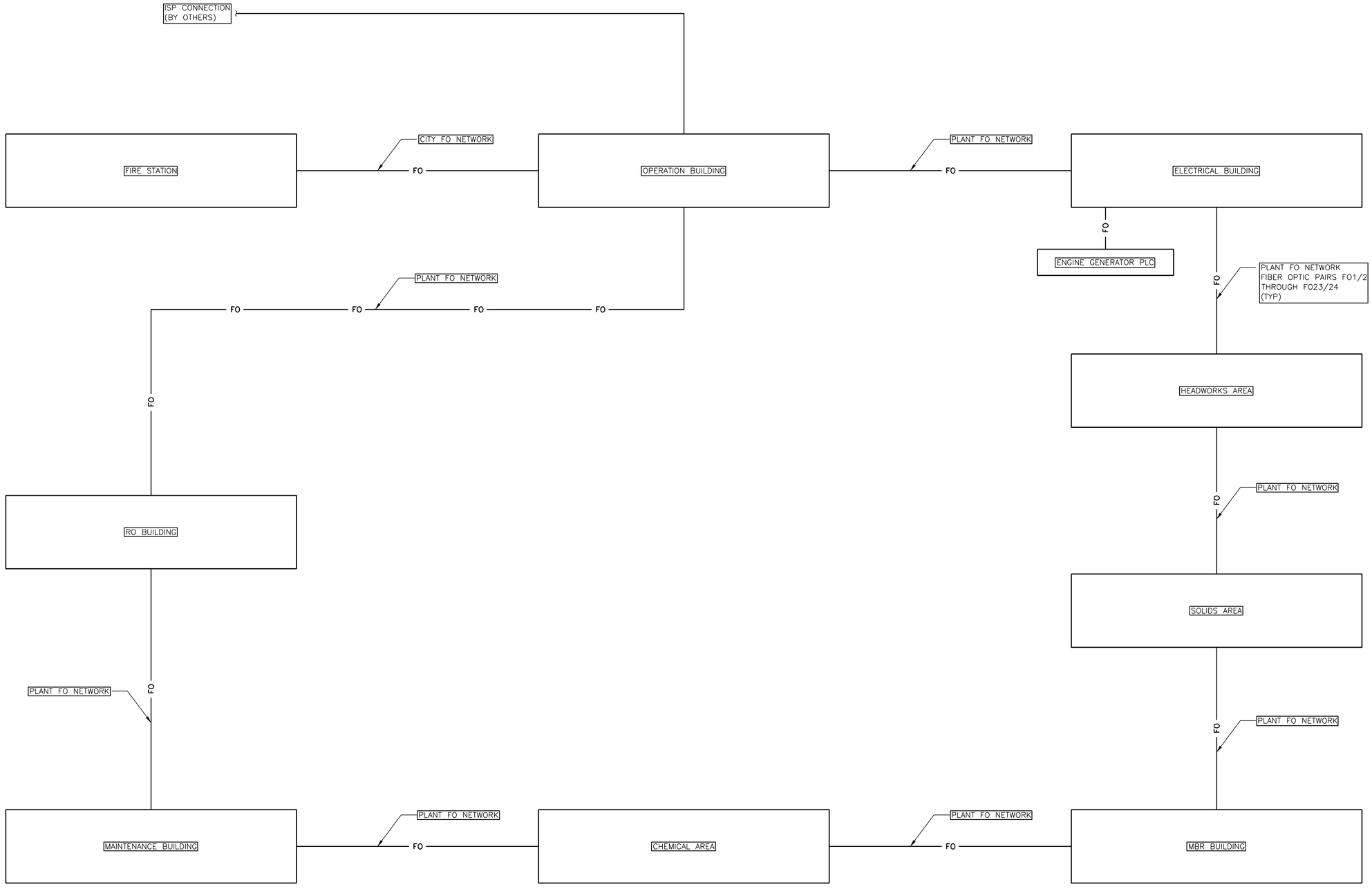

90% SUBMITTAL - NOT FOR CONSTRUCTION

NO.	BY	CHK	APP	DATE	REVISIONS AND RECORD OF USE

No. E 16569

BLACK & VEATCH
JOINT VENTURE
BLACK & VEATCH
FILANC

CITY OF MORRO BAY
FILANC B&V DB PROP
MORRO BAY WRF

OVERALL FIBER OPTIC NETWORK DIAGRAM

DESIGNED: BLB
DETAILED: PVR / VM
CHECKED: TAH
APPROVED:
DATE:

0 1/2 1
IF THIS BAR DOES NOT MEASURE 1" THEN DRAWING IS NOT TO FULL SCALE

PROJECT NO.
400530

00-I-701
SHEET
XX OF XX

RAN64017, 13.03.2020 09:25:59
RAN64017, 13.03.2020 09:26:44
RAN64017

D400530

95-CTRL-SVR-0001 WITH 19" FULL SERVER RACK - IN SERVER RM

HISTORIAN SERVER 90-CTRL-SRVR-0004

KEYBOARD, MONITOR, MOUSE (KMM) (TYPCAL)

REDUNDANT SERVERS HOSTING SCADA AND I/O SERVERS

TERMINAL, ACTIVE DIRECTORY, ANTI-MALWARE AND MICROSOFT UPDATE SERVER 90-CTRL-SRVR-0003

CMMS SERVER WITH CMMS SOFTWARE, DATABASE, AND FULL INTEGRATION WITH THE SCADA 2 X 32" SCREENS 90-CTRL-HMI-0002

OPERATOR HMI 2 X 32" SCREENS 90-CTRL-HMI-0001

ENGINEERING HMI 2 X 32" SCREENS 90-CTRL-HMI-0003

LASER PRINTER 90-CTRL-PRTR-0001

90-CTRL-UPS-0002

90-CTRL-UPS-0001

90-CTRL-SRVR-0001

90-CTRL-SRVR-0002

ISP CONNECTION

VPN APPLIANCE / FIREWALL

ROUTER 90-CTRL-RTR-0002

90-CTRL-FRWL-0003

90-CTRL-ES-0002

90-CTRL-FRWL-0002

90-CTRL-FRWL-0001 FIREWALL (TYPICAL)

ADMIN NETWORK SW*24 PORTS

90-CTRL-ES-0003

LAYER 3

DMZ SWITCH LAYER 2

90-CTRL-ES-0001 ETHERNET SW (TYPICAL)

SINGLE MODE

TO EXTERNAL CONNECTIONS PUMP STATION OPERATION BUILDING WTP WWTP

FPP

90-CTRL-FPP-0002

90-CTRL-FPP-0001

90-CTRL-RTR-0001

DMZ NETWORK

VPN APPLIANCE / FIREWALL

90-CTRL-HMI-0004 PCS HMI LAPTOP FOR REMOTE ACCESS

SCADA ROUTER

FIBER OPTIC PAIRS FO1/2 THROUGH FO23/24

80-ELEC-SWB-0001

80-ELEC-MCC-0001

80-ELEC-MCC-0002

POWER MONITOR

TABLET PC'S BY CITY. 2 TOTAL WITH HMI SOFTWARE

90-CTRL-HMI-0004 & 90-CTRL-HMI-0005

CONTROL ROOM

90-CTRL-FPP-0003

90-CTRL-ES-0005

90-CTRL-ES-0004

LAYER 3

OFFSITE FILE STORAGE SERVER 90-CTRL-SRVR-0007

REDUNDANT SCADA HISTORIAN 90-CTRL-SRVR-0005

SCADA TERMINAL SERVER 90-CTRL-SRVR-0006

FIRE STATION (NOTE 2)

TO CITY ADMIN NETWORK

TO PUMP STATIONS AND WWTP

NOTE 4

PRIMARY MODICON-PLC

SECONDARY MODICON-PLC

80-CTRL-PLC-0101

80-CTRL-PLC-0201

PLANT PLC IN ELECTRICAL BUILDING (NOTE 5)

80-CTRL-LCP-0001

OPERATOR HMI 1 X 24" SCREEN

NOTE 1 (TYP OF 2)

24 STRAND 50 MICRON FIBER OPTIC CABLE (TYPICAL)

FIBER OPTIC PAIR FO1/2 (TYPICAL FOR ALL)

FIBER PAIR	NETWORK ASSIGNMENT
FO1/2	SERVERs, PLCs AND WAPs
FO3/4	PLCs AND RIO
FO5/6	ADMINISTRATIVE PCs
FO7/8	SECURITY
FO9/10	CCTV
FO11/12	SPARE
FO13/14	SPARE
FO15/16	SPARE
FO17/18	SPARE
FO19/20	SPARE
FO21/22	SPARE
FO23/24	SPARE

50-ELEC-MCC-0001

POWER MONITOR

51-CTRL-HMI-0001

OPERATOR HMI 1 X 24" SCREEN

51-CTRL-FPP-0001

51-CTRL-RIO-0001

51-CTRL-ES-0001

RO AREA RIO PANEL 51-CTRL-LCP-0001

51-CTRL-UPS-0001

96-CTRL-FPP-0001

MAINTENANCE BUILDING 96-ADMIN-LCP-0001

90-CTRL-FPP-0001

90-CTRL-RIO-0001

CHEM AREA RIO PANEL 90-CTRL-LCP-0001

31-CTRL-FPP-0001

31-CTRL-RIO-0001

31-CTRL-ES-0001

MBR AREA RIO PANEL 31-CTRL-LCP-0001

31-CTRL-UPS-0001

72-CTRL-FPP-0001

72-CTRL-RIO-0001

72-CTRL-ES-0001

SOLIDS AREA RIO PANEL 72-CTRL-LCP-0001

72-CTRL-UPS-0001

FIBER OPTIC PAIRS FO1/2 AND FO3/4 (TYPICAL FOR LOOP)

21-CTRL-FPP-0001

21-CTRL-RIO-0001

21-CTRL-ES-0001

HW AREA RIO PANEL 21-CTRL-LCP-0001

21-CTRL-UPS-0001

21-SCR-ES-2001

81-GEN-FPP-0001

81-GEN-ES-0001

81-GEN-PLC-0002

VENDOR GEN LCP 81-GEN-LCP-0001

81-GEN-UPS-0001

81-GEN-OIT-0001

51-RO-PLC-0001

VENDOR RO LCP 51-RO-LCP-0001

51-RO-LCP-0101 (51-RO-RIO-0101)

51-RO-LCP-0201 (51-RO-RIO-0201)

51-RO-LCP-0301 (51-RO-RIO-0301)

51-RO-LCP-0401 (51-RO-RIO-0401)

52-UV-PLC-0001

VENDOR UV LCP 52-UV-LCP-0001

52-UV-LCP-0101 (52-UV-RIO-0101)

32-MBR-ES-0001

32-MBR-PLC-0001

VENDOR MBR LCP 32-MBR-LCP-0001

32-MBR-UPS-0001

32-MBR-OIT-0001

72-DWT-ES-0001

72-DWT-PLC-0001

VENDOR BELT FILTER PRESS LCP 72-DWT-LCP-0001

72-DWT-UPS-0001

72-DWT-OIT-0001

73-FSW-ES-0001

73-FSW-PLC-0001

VENDOR DISK FILTER LCP 73-FSW-LCP-0001

73-FSW-UPS-0001

73-FSW-OIT-0001

21-SCR-ES-1001

21-SCR-PLC-1001

VENDOR BAR SCREEN 1 LCP 21-SCR-LCP-1001

21-SCR-UPS-1001

21-SCR-OIT-1001

21-SCR-PLC-2001

VENDOR BAR SCREEN 2 LCP 21-SCR-LCP-2001

21-SCR-UPS-2001

21-SCR-OIT-2001

NOTES :

1. ALL OPERATOR HMI'S AND WIRELESS ACCESS POINTS ARE ON THE SCADA NETWORK.
2. ALL EQUIPMENT LOCATED IN FIRE STATION TO BE SUPPLIED BY THE CITY.
3. SCADA AND I/O SERVERS CONNECTED TO BOTH SCADA AND PLANT CONTROL NETWORKS.
4. FIBER RING CONSISTS OF 24 STRANDS TOTAL. 2 STRANDS FOR PCS NETWORK, 2 STRANDS FOR RIO NETWORK, 2 STRANDS FOR ADMINISTRATIVE NETWORK, 2 STRANDS FOR SECURITY NETWORK, 2 STRANDS FOR CCTV AND 14 SPARE STRANDS.
5. DUAL PLCS IN A REDUNDANT CONFIGURATION.
6. VENDOR PACKAGED SYSTEM PROVIDED WITH REDUNDANT PLC CPUs.

NO.	BY	CHK	APP
B	BLB	TAH	EVB
A	BLB	TAH	EVB

REVISIONS AND RECORD OF USE

DATE	
7-30-2019	60% SUBMITTAL
3-5-2019	30% SUBMITTAL

No. E 16569

BLACK & VEATCH

JOINT VENTURE

FILANC

BLACK & VEATCH

CITY OF MORRO BAY
FILANC B&V DB PROP
MORRO BAY WRF

NETWORK OVERALL DIAGRAM

DESIGNED: BLB
DETAILED: PVR / VM
CHECKED: TAH
APPROVED:
DATE:

0 1/2 1

IF THIS BAR DOES NOT MEASURE 1" THEN DRAWING IS NOT TO FULL SCALE

PROJECT NO. 400530

00-I-702
SHEET XX OF XX

90% SUBMITTAL - NOT FOR CONSTRUCTION

RAN64017, 13-03 2020 09:23:53
RAN64017, 13-03 2020 09:24:38
RAN64017
D400530

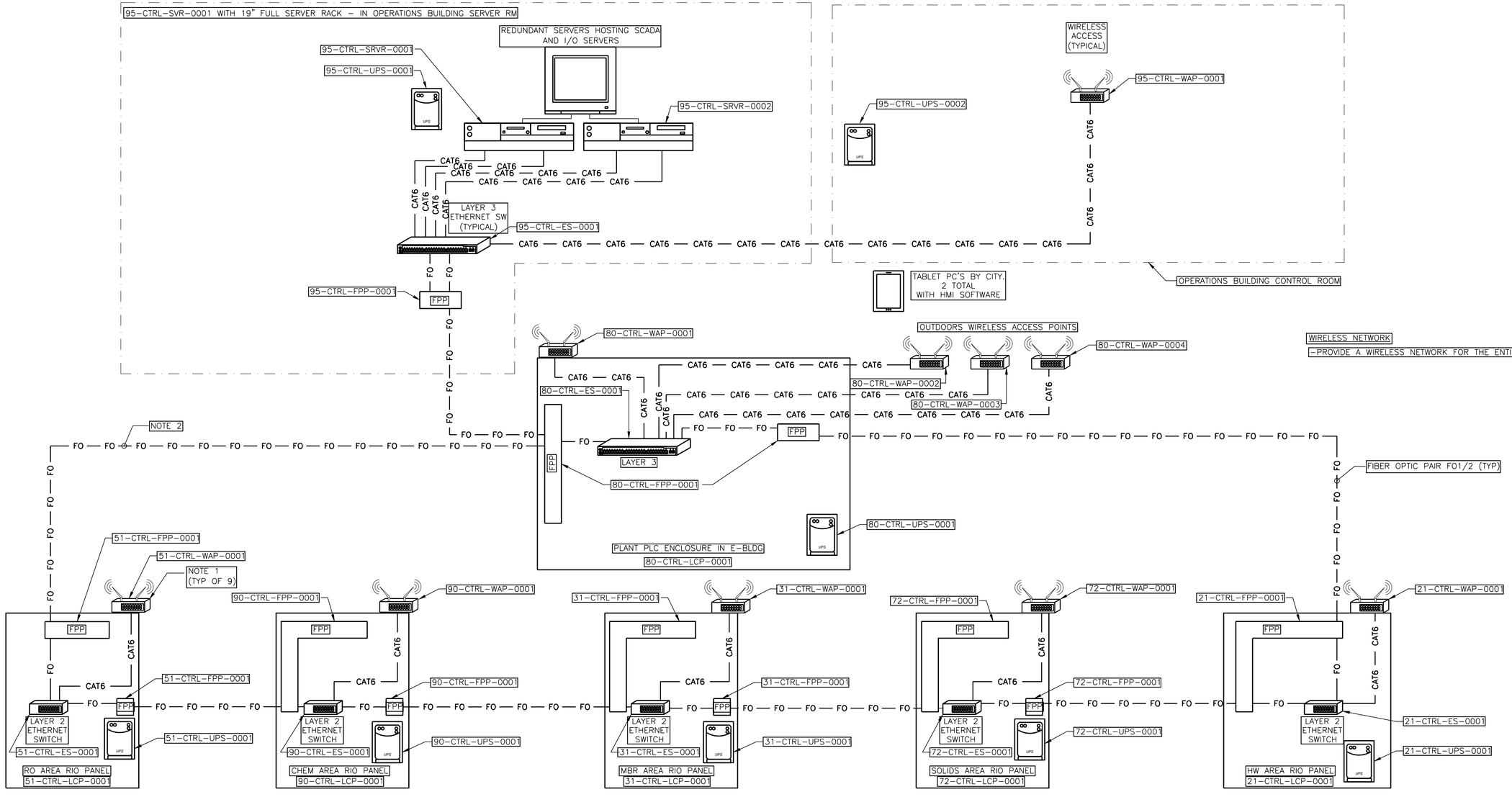

LEGEND

HMI – HUMAN–MACHINE INTERFACE

PLC – PROGRAMMABLE LOGIC CONTROLLER

ES – ETHERNET SWITCH

WAP – WIRELESS ACCESS POINT

TO 00–I–003 EQUIPMENT CODES

NOTES :

1. ALL WIRELESS ACCESS POINTS ARE ON THE SCADA NETWORK.
2. FIBER RING CONSISTS OF 6 STRANDS TOTAL. 2 STRANDS FOR SCADA NETWORK, 2 STRANDS FOR PLANT CONTROL NETWORK, AND 2 SPARE STRANDS.
3. FIBER RING CONSISTS OF 24 STRANDS TOTAL. 2 STRANDS FOR PCS NETWORK, 2 STRANDS FOR RIO NETWORK, 2 STRANDS FOR ADMINISTRATIVE NETWORK, 2 STRANDS FOR SECURITY NETWORK, 2 STRANDS FOR CCTV AND 14 SPARE STRANDS.

90% SUBMITTAL - NOT FOR CONSTRUCTION

NO.	BY	CHK	APP	DATE	REVISIONS AND RECORD OF USE
A	BLB	EVB		10.04.2019	90% SUBMITTAL

No. E 16569

BLACK & VEATCH

JOINT VENTURE

FILANC

BLACK & VEATCH

CITY OF MORRO BAY
FILANC B&V DB PROP
MORRO BAY WRF

WIRELESS NETWORK DIAGRAM

DESIGNED: BLB
DETAILED: PVR / VM
CHECKED: TAH
APPROVED:
DATE:

0 1/2 1
IF THIS BAR DOES NOT MEASURE 1" THEN DRAWING IS NOT TO FULL SCALE

PROJECT NO.
400530

00-I-703
SHEET
XX OF XX

RAN84017, 13.03.2020 09:22:06
RAN84017, 13.03.2020 09:22:47
RAN84017

D400530

TELEPHONE TERMINAL BOX AND BURIED TELEPHONE LINE (PROVIDED BY TELEPHONE COMPANY)

TO OFFSITE TELEPHONE SYSTEM

FO

TELEPHONE TERMINAL BOARD AND TELEPHONE COMPANY ROUTER 95-ELEC-TTB-0001

INTERNET TERMINAL BOX AND BURIED INTERNET LINE (PROVIDED BY INTERNET PROVIDER)

TO OFFSITE INTERNET SYSTEM

FO OR CAT6 (AS REQUIRED BY SERVICE PROVIDER)

FO OR CAT6 (AS REQUIRED BY SERVICE PROVIDER)

FIBER OPTIC PAIR FO5/6

ADMINISTRATIVE NETWORK SERVER RACK 95-ADMIN-SVR-0001

PLANT CONTROL SYSTEM NETWORK SERVER RACK 95-CTRL-SVR-0001

TO ELECTRICAL BLDG.

ELECTRICAL SERVER ROOM

CAT6

4 CAT6

8 CAT6

FIBER OPTIC PAIRS FO1/2 (TYPICAL FOR LOOP)

RECEPTIONIST OFFICE

FIRE ALARM CONTROL PANEL 95-ELEC-FP-0001 TELEPHONE CONNECTIONS

LOBBY

MANAGER OFFICE

CONFERENCE ROOM

OFFICE 1

OFFICE 2

OFFICE 3

MAP ROOM

CONTROL ROOM

OPERATIONS BUILDING

FIBER OPTIC CABLE FOR THE REDUNDANT PROGRAMMABLE LOGIC CONTROLLER (PLC) TO REMOTE INPUT/OUTPUT (RIO) UNITS NETWORK

TO/FROM ELECTRICAL BLDG. VIA CHEM. FEED, MBR, SOLIDS HANDING AND HEADWORKS CTRL LOCAL CONTROL PANELS

FIBER OPTIC PAIRS FO3/4 (TYPICAL FOR LOOP)

FIBER OPTIC CABLE FOR THE PHYSICALLY ISOLATED PLANT CONTROL SYSTEM (PCS) AND ADMINISTRATIVE NEWTWORKS

FROM OPERATIONS BLDG. ELECTRICAL SERVER ROOM

FIBER OPTIC CABLE FOR THE OPTICALLY ISOLATED PLANT CONTROL SYSTEM (PCS) AND ADMINISTRATIVE NETWORKS

RO/UV BUILDING

ELECTRICAL BUILDING

FOR OPERATOR HMI

FOR OPERATOR HMI

FIBER OPTIC PAIRS FO1/2

FIBER OPTIC PAIR FO5/6

FIBER OPTIC PAIRS FO3/4

51-CTRL-LCP-0001 (FIBER PATCH PANEL AND ETHERNET SWITCH)

80-CTRL-LCP-0001 (FIBER PATCH PANEL AND ETHERNET SWITCH)

FIBER OPTIC PAIRS FO1/2

FIBER OPTIC PAIR FO5/6

FIBER OPTIC PAIR FO5/6 FOR THE ADMINISTRATIVE NETWORK (TYPICAL)

I&C WORKSHOP

CONTROL ROOM

96-ADMIN-LCP-0001 (FIBER PATCH PANEL AND ETHERNET SWITCH)

MAINTENANCE BUILDING

LEGEND

ADMINISTRATIVE NETWORK OUTLET

PLANT CONTROL SYSTEM (PCS) NETWORK OUTLET

TELEPHONE FLOOR OUTLET

TELEPHONE OUTLET

90% SUBMITTAL - NOT FOR CONSTRUCTION

NO.	BY	CHK	APP	DATE	REVISIONS AND RECORD OF USE
A	BLB	EVB		10-04-2019	90% SUBMITTAL

No. E 16569

BLACK & VEATCH

JOINT VENTURE

FILANC

BLACK & VEATCH

CITY OF MORRO BAY
FILANC B&V DB PROP
MORRO BAY WRF

OFFICE NETWORK AND TELEPHONE SYSTEM DIAGRAM

DESIGNED: BLB
DETAILED: PVR / VM
CHECKED: TAH
APPROVED:
DATE:

0 1/2 1

IF THIS BAR DOES NOT MEASURE 1" THEN DRAWING IS NOT TO FULL SCALE

PROJECT NO. 400530

00-I-704

SHEET XX OF XX

RAN64017, 13-03-2020 09:20:41
RAN64017, 13-03-2020 09:21:23
RAN64017

D400530

OPERATIONS BUILDING

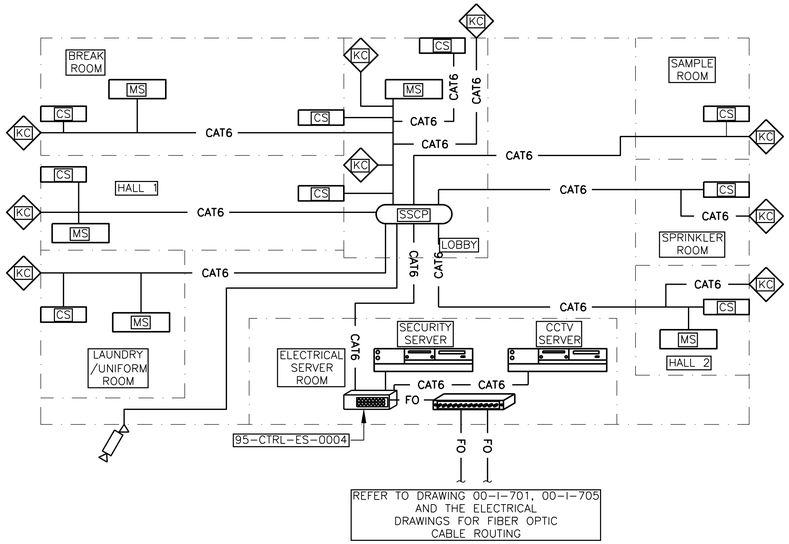

MAINTENANCE BUILDING

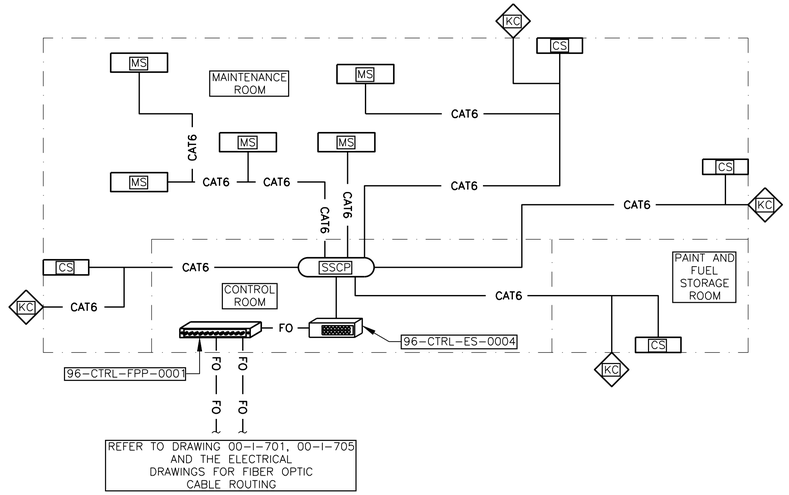

ELECTRICAL BUILDING

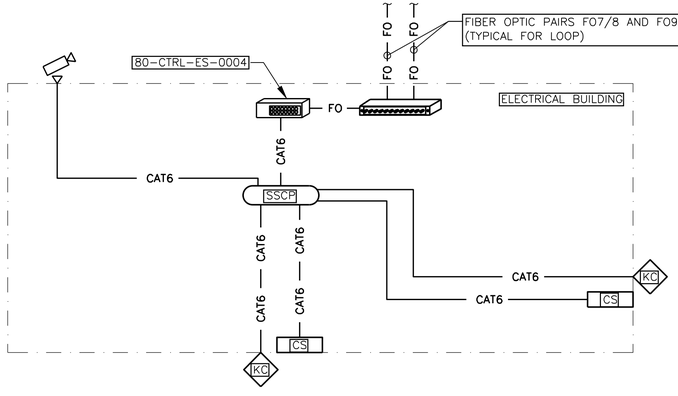

RO/UV BUILDING

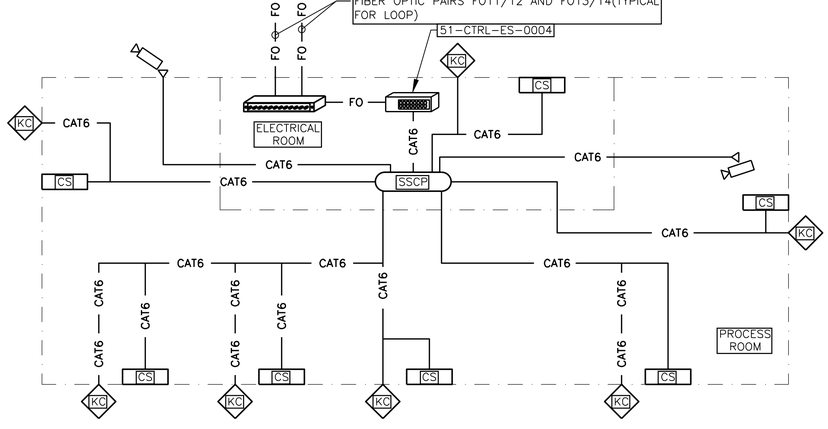

LEGEND:

SSCP	SECURITY SYSTEM CONTROL PANEL
MS	MOTION SENSOR
CS	CONTACT SWITCH (DOOR)
KC	CARD READER
	INDUSTRIAL ETHERNET SWITCH
	FIBER PATCH PANEL
	CLOSED CIRCUIT TELEVISION CAMERA (CCTV)
△	CCTV NETWORK OUTLET
	SERVER

90% SUBMITTAL - NOT FOR CONSTRUCTION

NO.	BY	CHK	APP	DATE	REVISIONS AND RECORD OF USE

No. E 16569

BLACK & VEATCH

JOINT VENTURE

FILANC

BLACK & VEATCH

CITY OF MORRO BAY
FILANC B&V DB PROP
MORRO BAY WRF

SECURITY SYSTEM DIAGRAM

DESIGNED: BLB
DETAILED: PVR / VM
CHECKED: TAH
APPROVED:
DATE:

0 1/2 1
IF THIS BAR DOES NOT MEASURE 1" THEN DRAWING IS NOT TO FULL SCALE

PROJECT NO.
400530

00-I-705
SHEET
XX OF XX

RAN64017, 13-03-2020 09:15:58
RAN64017, 13-03-2020 09:18:25
RAN64017
D400530

PCS HMI

21-CTRL-RIO-0001

FLOW FI 0101 | FLOW FI 0201 | START TRAIN 1 UCR 0001 | STOP TRAIN 1 UCS 0001 | FAIL YA 0001 | HI LEVEL LAH 0001 | IN AUTO YI 0001 | ESTOP YA 0001 | RUNNING YIR 0001 | LOW SPEED YIR 0001 | HIGH SPEED YIR 0001 | SPEED RESET CMD SRC 0001

IN REMOTE YI 1001 | OPENED ZIO 1001 | CLOSED ZIC 1001 | OPEN CMD ZCO 1001 | CLOSE CMD ZCC 1001

IN REMOTE YI 2001 | OPENED ZIO 2001 | CLOSED ZIC 2001 | OPEN CMD ZCO 2001 | CLOSE CMD ZCC 2001

BAR SCREEN CONTROL SYSTEM PANEL
21-SCR-LCP-1001 (21-SCR-PLC-1001)
(WITH LOCAL STARTERS/DRIVES)

QIK RESET TIMER | QIK AUTO HIGH SPD DELAY TIMER | SK MANUAL SPEED CONTROLLER | QIK 24 HR PROGRAM TIMER | YL FWD | SK LOW SPEED SETPOINT | SK HIGH SPEED SETPOINT | HMS SPEED RESET | YL REV | SI SPEED INDICATION | LIK HIGH DIFF SETPOINT | LAH | YA | YA FR HS FR HS TAH OOA | SI | HMS | SK | HMS RESET | JL

BAR SCREEN NO. 1 CONTROLS

HS OCA | YA FAIL | YL OFF | SPRAY WATER | YL FWD | YL REV | HS FR | HS OOA | PAL

WASHER COMPACTOR NO. 1 CONTROLS

480V

VALVE ACTUATOR: HS LOR | HS OSC | ZLC | ZLO | ZSC | ZSO — 480V

ZY 95-I-001 FROM SANITARY LIFT STATION — 6"-SAN-HDPE

18" X 12" REDUCING ELBOW

FIT 0101 — 24V — US

FE 0101 — 12"-WWR-HDPE — 18"-WWR-HDPE INFLUENT MAIN — M — 12" — 16"-WWR-DIP — 24"-WWR-DIP

SCR-V-0101 — SCR-V-0102 — 16" X 12" EXPANDING ELBOW — SCR-V-1001

24V — FIT 0201 — SCR-V-0201 — FE 0201 — 14" X 8" REDUCING ELBOW — 14"-WWR-HDPE INFLUENT MAIN — M — 8" — 8"-WWR-DIP — SCR-V-0202 — 12"-WWR-DIP — 12" X 8" EXPANDING ELBOW — SCR-V-2001 — 24"-WWR-DIP

AB 21-I-002 TO PACKAGED HEADWORKS NO. 2

US LDIT 1001 | LDSH 1001 — 24V

E-STOP HS

AA 21-I-001 TO GRIT REMOVAL COARSE SCREENS BYPASS CHANNEL

OPEN BASIN CONNECTION - NOT PIPE

LE 1001A — US | LSHH 1001 | OSH 1001

ZS 1101 | ZS 1201 | LE 1001B — US

COARSE SCREEN NO. 1
SCR-SCR-1001

SCR-V-1002 — TO PLANT DRAIN — 4"-WWS-DIP

CONVEYOR
SCR-COS-1001

E-STOP HS

PSL 1001 — 1"-PRW-PVC-02 — A — SCR-V-0010 — SCR-V-1008

WASHER COMPACTOR
SCR-WCMP-1001

CHANNEL

PACKAGED HEADWORKS NO. 1
(COARSE SCREEN AND WASHER COMPACTOR, BYPASS CHANNEL,VORTEX GRIT AND GRIT SEPARATOR/CLASSIFIER)

SYSTEM CODE = GRT — HS OO — OPEN BASIN CONNECTION - NOT PIPE

AA 21-I-001 FROM COARSE SCREEN BYPASS CHANNEL

24"-WWS-DIP — M — 18"-WWS-DIP — AE 22-I-001 TO SAFE BOX

GRT-V-1001

GRIT COLLECTOR NO. 1
GRT-GRB-1001

AD 21-I-001 FROM SEPARATOR / CLASSIFIER DRAIN NO. 1 — 3"-WWS-DIP

SYSTEM CODE = GRT — HS OOR

4"-WWS-DIP — 4"-FA-PVC-01

PG 1001 — 4"-WWS-DIP — SYSTEM CODE = GRT

GRT-V-1003

GRT-V-1002 — FLUSH PORT — GRIT PUMP NO. 1
GRT-P-1001

PSL 1001 — SYSTEM CODE = PRW — PRW-V-1005 — C — PRW-V-1006

4"-FA-PVC-01 — NOTE 7 — AC 23-I-001 TO ODOR CONTROL

VENT — NPW-V-1006 — D — NPW-V-1007

4"-FA-PVC-01

SEPARATOR CLASSIFIER
GRT-CGR-1001

GRT-V-1004

3"-WWS-DIP — AD 21-I-001 TO COARSE SCREENS NO. 1 EFFLUENT

PACKAGED HEADWORKS NO.1 SKID

B — 2"-PRW-PVC-02 — PRW-V-1001 — M — PRW-V-1002 — PRW-V-1003 — PRW-V-1004

ZZ 95-I-001 FROM SANITARY LIFT STATION — 6"-SAN-HDPE

HA 34-I-001 FROM RECYCLED WATER PUMPS — 2"-PRW-PVC-02

TO HEADWORKS HOSE BIBB
A
B
C
D
PWR CONNECTIONS ON THIS SHEET

2"-PRW-PVC-02 — AJ 21-I-002 TO PACKAGED HEADWORKS NO. 2

NOTES:

1. SEE LEGEND AND ABBREVIATIONS ON DRAWING 00-I-001, 00-I-002 AND 00-I-003.
2. AREA CODE IS 21 UNLESS OTHERWISE NOTED. SYSTEM CODE IS SCR UNLESS OTHERWISE NOTED.
3. LOCAL CONTROL DEVICES SUCH AS INDICATING LIGHTS AND SWITCHES, LOCATED IN MCC's OR AT DRIVEN EQUIPMENT MAY NOT INDICATED ON THIS P&ID.
4. FOR DRAWING CLARITY, VALVE TAG NUMBER ONLY SHOW THE SEQUENCE NUMBER UNLESS OTHERWISE NOTED.
5. SEE THE SEAL WATER SYSTEM DETAILS IN THE SEAL WATER STATIONS SPECIFICATION FOR FURTHER SEAL WATER VALVE AND PIPING REQUIREMENTS.
6. FIELD INSTRUMENTATION POWER SHALL BE SUPPLIED BY ASSOCIATED CONTROL PANEL OR INDEPENDENT POWER SUPPLY.
7. SEE HVAC/ MECHANICAL SPECIFICATION FOR ADDITIONAL DETAILS ON ODOR CONTROL DUCTING

* ITEM FURNISHED BY PACKAGED HEADWORKS SUPPLIER.

90% SUBMITTAL - NOT FOR CONSTRUCTION

NO.	BY	CHK	APP	DATE	REVISIONS AND RECORD OF USE
B	BLB	TAH	EVB	7/30/2019	60% SUBMITTAL
A	BLB	TAH	EVB	3/5/2019	30% SUBMITTAL

REGISTERED PROFESSIONAL ENGINEER — BRIAN L. BUTLER — No. E 16569 — ELECTRICAL — STATE OF CALIFORNIA

BLACK & VEATCH

JOINT VENTURE

FILANC — BLACK & VEATCH

CITY OF MORRO BAY
MORRO BAY WATER
RECLAMATION FACILITY (WRF)

HEADWORKS AREA - HEADWORKS
P&ID
TRAIN 1

DESIGNED: BLB, TDE
DETAILED: PVR
CHECKED: TAH
APPROVED:
DATE:

0 1/2 1
IF THIS BAR DOES NOT MEASURE 1" THEN DRAWING IS NOT TO FULL SCALE

PROJECT NO. 400530

21-I-001
SHEET
OF

PLOTTED: 3/17/2020 4:59:58 PM
D400530

PCS HMI

START TRAIN 2 UCR 0002 | STOP TRAIN 2 UCS 0002 | FAIL YA 0002 | HI LEVEL LAH 0002 | IN AUTO YI 0002 | ESTOP YA 0002 | RUNNING YIR 0002 | LOW SPEED YIR 0002 | HIGH SPEED YIR 0002 | SPEED RESET CMD SRC 0002

21-CTRL-RIO-0001

START TRAIN 2 UCR 0002 | STOP TRAIN 2 UCS 0002 | FAIL YA 0002 | HI LEVEL LAH 0002 | IN AUTO YI 0002 | ESTOP YA 0002 | RUNNING YIR 0002 | LOW SPEED YIR 0002 | HIGH SPEED YIR 0002 | SPEED RESET CMD SRC 0002

PCS HMI

IN REMOTE YI 2001 | OPENED ZIO 2001 | CLOSED ZIC 2001 | OPEN CMD ZCO 2001 | CLOSE CMD ZCC 2001

IN REMOTE YI 2001 | OPENED ZIO 2001 | CLOSED ZIC 2001 | OPEN CMD ZCO 2001 | CLOSE CMD ZCC 2001

21-CTRL-RIO-0001

BAR SCREEN CONTROL SYSTEM PANEL
21-SCR-LCP-2001 (21-SCR-PLC-2001)
(WITH LOCAL STARTERS/DRIVES)

480V

BAR SCREEN NO. 2 CONTROLS: QIK RESET TIMER; QIK AUTO HIGH SPD DELAY TIMER; SK MANUAL SPEED CONTROLLER; QIK 24 HR PROGRAM TIMER; YL FWD; SK LOW SPEED SETPOINT; SK HIGH SPEED SETPOINT; HMS SPEED RESET; YL REV; SI SPEED INDICATION; LIK HIGH DIFF SETPOINT; LAH; YA; YA HS (FR) HS (OOA) TAH; SI; HMS; SK; HMS RESET; JL

WASHER COMPACTOR NO. 2 CONTROLS: HS OCA; YA FAIL; YL OFF; SPRAY WATER; YL FWD; YL REV; HS (FR) HS (OOA) PAL

PACKAGED HEADWORKS NO. 2
(COARSE SCREEN AND WASHER COMPACTOR,
BYPASS CHANNEL,
VORTEX GRIT AND GRIT SEPARATOR/CLASSIFIER)

HS 2001 LOR | HS 2001 OSC | ZLC 2001 | ZLO 2001 | ZSC 2001 | ZSO 2001
VALVE ACTUATOR
480V

24V — LDIT 2001, LDSH 2001

E-STOP HS

OPEN BASIN CONNECTION - NOT PIPE

AF 21-I-002
COARSE SCREEEN BYPASS CHANNEL TO GRIT REMOVAL

OSH 2001

LSHH 2001

LE 2001A US

24"-WWR-DIP

AB 21-I-001
PACKAGED HEADWORKS NO. 2 INFLUENT

ZS 2101

ZS 2201

LE 2001B US

COARSE SCREEN NO. 2
SCR-SCR-2001

CHANNEL

SCR-V-2002

4"-WWS-DIP

TO PLANT DRAIN

CONVEYOR
SCR-COS-2001

1"-PRW-PVC-02

PSL 2001

A SCR-V-2010

SCR-V-2008 S

WASHER COMPACTOR
SCR-WCMP-2001

SYSTEM CODE = GRT

HS OO

OPEN BASIN CONNECTION - NOT PIPE

AF 21-I-002
FROM COARSE SCREEN BYPASS CHANNEL

24"-WWS-DIP

M

GRT-V-2001

18"-WWS-DIP

AG 22-I-001
TO SAFE BOX

3"-WWS-DIP

AI 21-I-002
FROM SEPARATOR / CLASSIFIER DRAIN NO. 2

GRTI COLLECTOR NO. 2
GRT-GRB-2001

SYSTEM CODE = GRT

HS OOR

4"-WWS-DIP

4"-FA-PVC-01

4"-WWS-DIP

PG 2001

GRT-V-2003

4"-WWS-DIP

GRT-V-2002

FLUSH PORT

GRIT PUMP NO. 2
GRT-P-2001

PSL 2001

SYSTEM CODE = GRT

PRW-V-2003

PRW-V-2004

PRW-V-1205

PRW-V-1206 C

SYSTEM CODE =PRW

VENT

4"-FA-PVC-01

AH 23-I-001
TO ODOR CONTROL

NOTE 7

D PRW-V-2006

PRW-V-2007

AJ 21-I-001
FROM PACKAGED HEADWORKS NO. 1

2"-PRW-PVC-02

A
B
C
D
PWR CONNECTIONS ON THIS SHEET

B 2"-PRW-PVC-02

PRW-V-2001

PRW-V-2002

M

PACKAGED HEADWORKS NO.2 SKID

SEPARATOR CLASSIFIER
GRT-CGR-2001

GRT-V-2004

3"-WWS-DIP

AI 21-I-002
TO COURSE SCREENS NO. 2 EFFLUENT

NOTES:

1. SEE LEGEND AND ABBREVIATIONS ON DRAWING 00-I-001, 00-I-002 AND 00-I-003.
2. AREA CODE IS 21 UNLESS OTHERWISE NOTED. SYSTEM CODE IS SCR UNLESS OTHERWISE NOTED.
3. LOCAL CONTROL DEVICES SUCH AS INDICATING LIGHTS AND SWITCHES, LOCATED IN MCC's OR AT DRIVEN EQUIPMENT MAY NOT INDICATED ON THIS P&ID.
4. FOR DRAWING CLARITY, VALVE TAG NUMBER ONLY SHOW THE SEQUENCE NUMBER UNLESS OTHERWISE NOTED.
5. SEE THE SEAL WATER SYSTEM DETAILS IN THE SEAL WATER STATIONS SPECIFICATION FOR FURTHER SEAL WATER VALVE AND PIPING REQUIREMENTS.
6. FIELD INSTRUMENTATION POWER SHALL BE SUPPLIED BY ASSOCIATED CONTROL PANEL OR INDEPENDENT POWER SUPPLY.
7. SEE HVAC/ MECHANICAL SPECIFICATION FOR ADDITIONAL DETAILS ON ODOR CONTROL DUCTING

* ITEM FURNISHED BY PACKAGED HEADWORKS SUPPLIER.

90% SUBMITTAL- NOT FOR CONSTRUCTION

NO.	BY	CHK	APP	DATE	REVISIONS AND RECORD OF USE
B	BLB	TAH	EVB	7/30/2019	60% SUBMITTAL
A	BLB	TAH	EVB	3/5/2019	30% SUBMITTAL

REGISTERED PROFESSIONAL ENGINEER BRIAN L. BUTLER No. E 16569 ELECTRICAL STATE OF CALIFORNIA

BLACK & VEATCH

JOINT VENTURE

BLACK & VEATCH

FILANC

CITY OF MORRO BAY
MORRO BAY WATER
RECLAMATION FACILITY (WRF)

HEADWORKS AREA - HEADWORKS
P&ID
TRAIN 2

DESIGNED: BLB, TDE
DETAILED: PVR
CHECKED: TAH
APPROVED:
DATE:

0 1/2 1
IF THIS BAR DOES NOT MEASURE 1" THEN DRAWING IS NOT TO FULL SCALE

PROJECT NO. 400530

21-I-002
SHEET
OF

PLOTTED: 3/17/2020 5:00:01 PM
D400530

TYPICAL I/O FOR MODULATING VALVE SRV-V-1001

PCS HMI

FLOW FI 0010 | TRBL FA 0010 | LEVEL LI 0001 | IN REMOTE YI 2001 | POSITION SETPT ZC 2001 | POSITION FEEDBACK ZI 2001 | CLOSED ZSC 2001 | OPENED ZSO 2001 | FLOW FI 1001 | FLOW FI 2001 | RUN CMD UCR 2001 | IN AUTO YI 2001 | RUNNING FAST YIR 2001 | RUNNING SLOW YIR 2001 | TRBL FA 2001 | HI DIFF. RESSURE PDA 2001 | SPRAY WASH LOW PRESSURE PAL 2001 | RUN CMD UCR 1001 | IN AUTO YI 1001 | RUNNING FAST YIR 1001 | RUNNING SLOW YIR 1001 | TRBL YA 1001 | HI DIFF. RESSURE PDA 1001 | SPRAY WASH LOW PRESSURE PAL 1001 | IN REMOTE YI 1104 | OPENED ZIO 1104 | CLOSED ZIC 1104 | OPEN CMD ZCO 1104 | CLOSE CMD ZCC 1104 | IN REMOTE YI 2003 | OPENED ZIO 2003 | CLOSED ZIC 2003 | OPEN CMD ZCO 2003 | CLOSE CMD ZCC 2003 | ZERO SPEED SI 0001 | MOTOR OVLD YA 0001 | RUNNING YIR 0001 | IN REMOTE YI 0001 | RUN CMD UCR 0001

21-CTRL-RIO-0001 (duplicate of the above)

SEE TYPICAL I/O AND CONTROLS

480VAC

VALVE ACTUATOR (HS 2001, LOR, ZT 2001, OSC, HS 2001, ZI 2001, ZSC 2001, ZSO 2001)

480VAC

VALVE ACTUATOR (HS 1001, LOR, ZT 1001, OSC, HS 1001, ZI 1001, ZSC 1001, ZSO 1001)

FINE SCREEN CONTROL SYSTEM PANEL
22-SCR-LCP-0002
(WITH LOCAL STARTERS/DRIVES)

POWER JL | SLOW YL | FAST YL | TRBL YA | OFF YL
LDAH | TAH | PAL
LDIT 2001 US | I
ETM KQI | E-STOP HS | RESET HS | OOA HS

480V

FINE SCREEN CONTROL SYSTEM PANEL
22-SCR-LCP-0001
(WITH LOCAL STARTERS/DRIVES)

POWER JL | SLOW YL | FAST YL | TRBL YA | OFF YL
LDAH | TAH | PAL
LDIT 1001 US | I
ETM KQI | E-STOP HS | RESET HS | OOA HS

480V

VALVE ACTUATOR (HS 1104, LOR, HS 1104, OSC, ZLC 1104, ZLO 1104, ZSC 1104, ZSO 1104)

480V

VALVE ACTUATOR (HS 2003, LOR, HS 2003, OSC, ZLC 2003, ZLO 2003, ZSC 2003, ZSO 2003)

480V

CONVEYOR AND DISCHARGE CHUTE CONTROL PANEL
22-SCR-LCP-0003
(WITH LOCAL STARTERS/DRIVES)

480V

QB 72-I-001 — 6"-WWS-PVC-02
SAFE SETTLE RETURN FLOW

30"-WWS-DIP — 30"-WWS-HDPE — BA 71-I-002
TO SAFE SETTLE

24V FIT 1001 — FE 1001 — M — 8" — 8"-WWS-DIP — SCR-V-1001 — FLOW CONTROL VALVE — 12"-WWS-DIP

SYSTEM CODE = PRW
E-STOP HS — PSL 1001 — LE 1001A US — LE 1001B US — 4"-FA-PVC-01 — C — S — PRW-V-1001 — PRW-V-1002 — A

PACKAGED FINE SCREEN NO. 1 WITH WASHER COMPACTOR SCR-SCR-1101

14"-WWS-DIP — SCR-V-1104

AG 21-I-002 — 18"-WWS-DIP
FROM PACKAGED HEADWORKS NO. 2

AE 21-I-001 — 18"-WWS-DIP
FROM PACKAGED HEADWORKS NO. 1

COMPOSITE SAMPLER SCR-SAMP-0001 — 120VAC — 24V LIT 0001 — LE 0001 US — 6"-WWS-DIP

SAFE BOX

6"-WWS-PVC-02 — A/G — B/G

12"-WWS-DIP

24V FIT 2001 — FE 2001 — M — 8" — 12"-WWS-DIP — SCR-V-2001 — FLOW CONTROL VALVE — 8"-WWS-DIP

SYSTEM CODE = PRW
E-STOP HS — PSL 2001 — LE 2001A US — LE 2001B US — 4"-FA-PVC-01 — D — S — PRW-V-2001 — PRW-V-2002 — B

PACKAGED FINE SCREEN NO. 2 WITH WASHER COMPACTOR SCR-SCR-1201

14"-WWS-DIP — SCR-V-2003 — 12"-WWS-DIP — BD 31-I-001 — TO BNR

FINE SCREEN ODOR CONNECTIONS ON THIS SHEET — C — D — 4"-FA-PVC-01 — 6"-FA-PVC-01 — BC 23-I-001 — TO ODOR CONTROL — NOTE 5

HB 34-I-001 — 2"-PRW-PVC-02
FROM RECYCLED WATER PUMPS

A — B — PRW CONNECTIONS ON THIS SHEET

TO HEADWORKS - FINE SCREENS HOSE BIBB

6"-FA-PVC-01 — BB 23-I-001 — TO ODOR CONTROL — NOTE 5

SSL 0001

CONVEYOR AND DISCHARGE CHUTE SCR-COS-0001 — D

NOTES:

1. SEE LEGEND AND ABBREVIATIONS ON DRAWING 00-I-001, 00-I-002 AND 00-I-003.
2. AREA CODE IS 22 UNLESS OTHERWISE NOTED. SYSTEM CODE IS SCR UNLESS OTHERWISE NOTED.
3. LOCAL CONTROL DEVICES SUCH AS INDICATING LIGHTS AND SWITCHES, LOCATED IN MCC's OR AT DRIVEN EQUIPMENT MAY NOT INDICATED ON THIS P&ID.
4. FOR DRAWING CLARITY, VALVE TAG NUMBER ONLY SHOW THE SEQUENCE NUMBER UNLESS OTHERWISE NOTED.
5. SEE HVAC/ MECHANICAL SPECIFICATION FOR ADDITIONAL DETAILS ON ODOR CONTROL DUCTING.

* ITEM FURNISHED BY PACKAGED FINE SCREENS SUPPLIER.

90% SUBMITTAL - NOT FOR CONSTRUCTION

NO.	BY	CHK	APP	DATE	REVISIONS AND RECORD OF USE
B	BLB	TAH	EVB	7/30/2019	60% SUBMITTAL
A	BLB	TAH	EVB	3/5/2019	30% SUBMITTAL

REGISTERED PROFESSIONAL ENGINEER — BRIAN L. BUTLER — No. E 16569 — ELECTRICAL — STATE OF CALIFORNIA

BLACK & VEATCH

JOINT VENTURE

BLACK & VEATCH

FILANC

CITY OF MORRO BAY
MORRO BAY WATER
RECLAMATION FACILITY (WRF)

HEADWORKS AREA - FINE SCREENS
P&ID
SAFE BOX & FINE SCREENS

DESIGNED: BLB, TDE
DETAILED: PVR
CHECKED: TAH
APPROVED:
DATE:

0 1/2 1
IF THIS BAR DOES NOT MEASURE 1" THEN DRAWING IS NOT TO FULL SCALE

PROJECT NO. 400530

22-I-001
SHEET OF

PLOTTED: 3/17/2020 5:00:05 PM
D400530

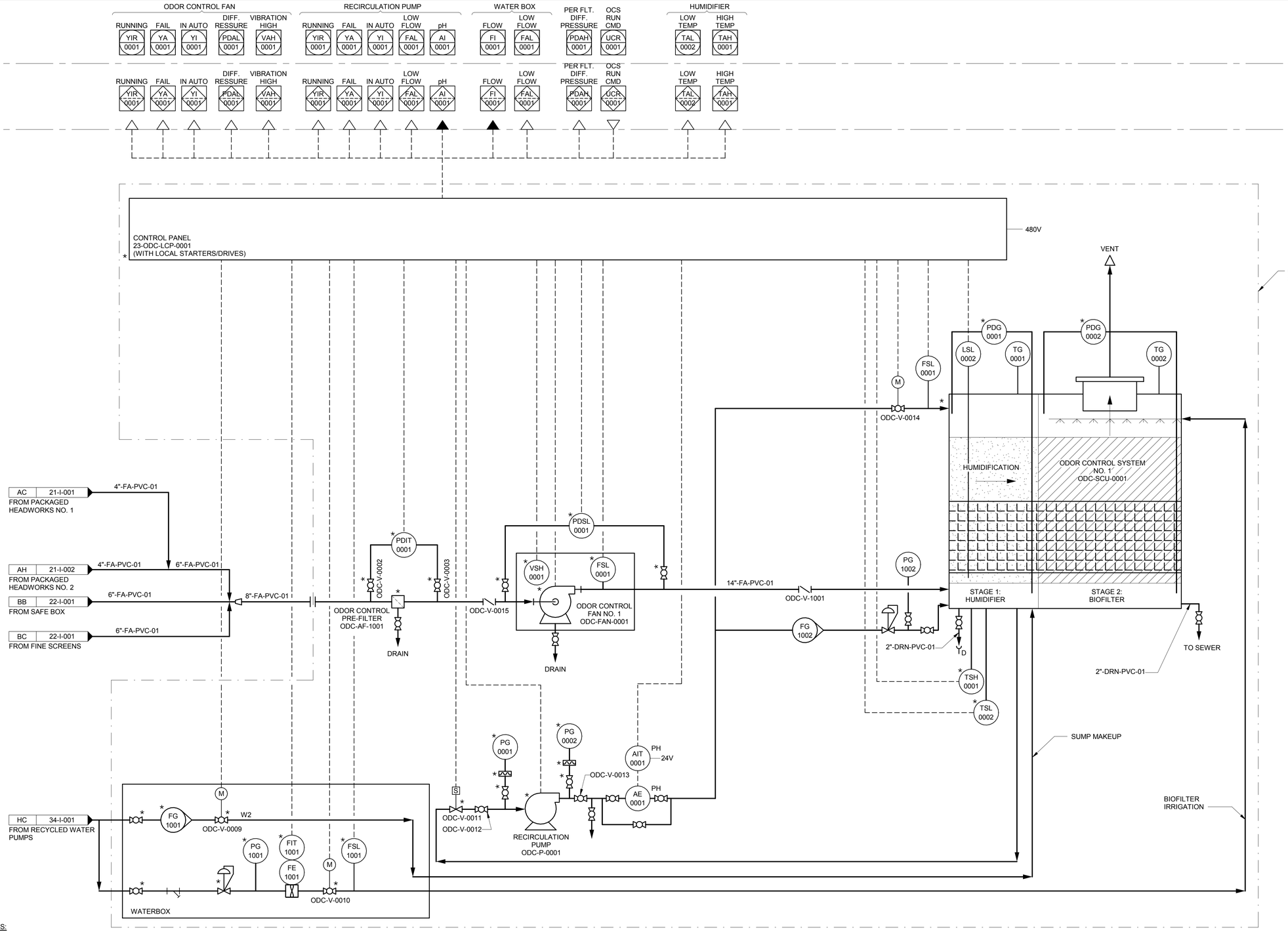

NOTES:

1. SEE LEGEND AND ABBREVIATIONS ON DRAWINGS 00-I-001, 00I-002 AND 00-I-003.
2. AREA CODE IS 23 UNLESS OTHERWISE NOTED. SYSTEM CODE IS ODC UNLESS OTHERWISE NOTED.
3. LOCAL CONTROL DEVICES SUCH AS INDICATING LIGHTS AND SWITCHES, LOCATED ON MCCs OR AT DRIVEN EQUIPMENT, MAY NOT BE SHOWN ON THIS P&ID.

* ITEM FURNISHED BY PACKAGED ODOR CONTROL SYSTEM SUPPLIER.

90% SUBMITTAL - NOT FOR CONSTRUCTION

NO.	BY	CHK	APP	DATE	REVISIONS AND RECORD OF USE
B	BLB	TAH	EVB	7/30/2019	60% SUBMITTAL
A	BLB	TAH	EVB	3/5/2019	30% SUBMITTAL

REGISTERED PROFESSIONAL ENGINEER
BRIAN L. BUTLER
No. E 16569
ELECTRICAL
STATE OF CALIFORNIA

BLACK & VEATCH
JOINT VENTURE
BLACK & VEATCH
FILANC

CITY OF MORRO BAY
MORRO BAY WATER RECLAMATION FACILITY (WRF)

HEADWORKS AREA - ODOR CONTROL
P&ID
ODOR CONTROL SYSTEM

DESIGNED: BLB, TDE
DETAILED: PVR
CHECKED: TAH
APPROVED:
DATE:

0 1/2 1
IF THIS BAR DOES NOT MEASURE 1" THEN DRAWING IS NOT TO FULL SCALE

PROJECT NO. 400530

23-I-001
SHEET OF

PLOTTED: 3/17/2020 5:00:09 PM
D400530

TYPICAL I/O FOR AER-V-1201

PCS HMI: IN REMOTE YI 1101 | POSITION FEEDBACK ZI 1101 | POSITION SETPT ZC 1101 | OPEN ZSO 1101 | CLOSE ZSC 1101 | pH AI 0001 | FAIL UA 0001 | FAIL UA 0001 | TSS AI 0001 | ORP AI 1001 | FAIL UA 1001 | PCS HMI

31-CTRL-RIO-0001: IN REMOTE YI 1101 | POSITION FEEDBACK ZI 1101 | POSITION SETPT ZC 1101 | OPEN ZSO 1101 | CLOSE ZSC 1101 | pH AI 0001 | FAIL UA 0001 | FAIL UA 0001 | TSS AI 0001 | ORP AI 1001 | FAIL UA 1001 | 31-CTRL-RIO-0001

PCS HMI: IN REMOTE YI 1001 | FAIL UA 1001 | RUNNING YIR 1001 | RUN CMD UCR 1001 | PCS HMI

80-CTRL-PLC-0001: IN REMOTE YI 1001 | FAIL UA 1001 | RUNNING YIR 1001 | RUN CMD UCR 1001 | 80-CTRL-PLC-0001

PCS HMI: FLOW FI 1101 | FAIL UA 1101 | DO AI 1101 | PCS HMI

31-CTRL-RIO-0001: FLOW FI 1101 | FAIL UA 1101 | DO AI 1101 | 31-CTRL-RIO-0001

TYPICAL I/O FOR 31-BNR-V-1001

PCS HMI: FLOW FI 1201 | DO AI 1201 | FAIL UA 1201 | FAIL UA 1002 | MLSS AI 1002 | FAIL UA 1003 | NH3 AI 1003 | NH4 AI 1003 | IN REMOTE YI 1001 | OPEN ZIO 1001 | CLOSED ZIC 1001 | OPEN CMD ZCO 1001 | CLOSE CMD ZCC 1001 | LEVEL LI 1001 | PCS HMI

31-CTRL-RIO-0001: FLOW FI 1201 | DO AI 1201 | FAIL UA 1201 | FAIL UA 1002 | MLSS AI 1002 | FAIL UA 1003 | NH3 AI 1003 | NH4 AI 1003 | IN REMOTE YI 1001 | OPEN ZIO 1001 | CLOSED ZIC 1001 | OPEN CMD ZCO 1001 | CLOSE CMD ZCC 1001 | LEVEL LI 1001 | 31-CTRL-RIO-0001

PCS HMI: RUN CMD UCR 1001 | IN REMOTE YI 1001 | RUNNING YIR 1001 | FAULT YA 1001 | SPEED FEEDBACK SI 1001 | SPEED SETPT SC 1001 | IN REMOTE YI 0001 | FAIL UA 0001 | RUNNING YIR 0001 | RUN CMD UCR 0001 | PCS HMI

80-CTRL-PLC-0001: RUN CMD UCR 1001 | IN REMOTE YI 1001 | RUNNING YIR 1001 | FAULT YA 1001 | SPEED FEEDBACK SI 1001 | SPEED SETPT SC 1001 | IN REMOTE YI 0001 | FAIL UA 0001 | RUNNING YIR 0001 | RUN CMD UCR 0001 | 80-CTRL-PLC-0001

TO 31-CTRL-RIO-0001 TYPICAL I/O

HS 1101 LOR HS 1101 OSC ZT 1101; ZSO 1101 ZSC 1101 ZI 1101; 480V
VALVE ACTUATOR

31-ELEC-MCC-0002

HS 1201 LOR HS 1201 OSC ZT 1201; ZSO 1201 ZSC 1201 ZI 1201; 480V
VALVE ACTUATOR

31-BNR-VFD-1001
80-ELEC-MCC-0002/

31-ELEC-MCC-0002

A

EL 31-I-004 — 6"-AA-SS-02
FROM PROCESS AIR BLOWERS

EN 31-I-004 — 8"-AA-SS-02
FROM PROCESS AIR BLOWERS

AIT 1001 ORP 24V

8" ΔT FE 1101 FIT 1101 24V

6" ΔT FE 1201 FIT 1201 24V

6"-AA-SS-02

AER-V-1101

AER-V-1201

AIT 1101 DO 24V

AIT 1201 DO 24V; AIT 1002 MLSS 24V

AIT 1003 NH3/NH4 120V

AE 1003 NH3/NH4

LIT 1001 24V; LE 1001 US

HS 1001 OO; HS 1001A E-STOP

TSH 1001; MSH 1001

HS 1001 LOR HS 1001A OSC ZLC 1001 ZLO 1001; ZSC 1001 ZSO 1001; 480V
VALVE ACTUATOR

TO 31-CTRL-RIO-0001
FOR OPEN/CLOSE VALVE

M

3"-PRW-PVC-02
3"-PRW-PVC-01
A PRW CONNECTION ON THIS SHEET

HD 34-I-001
FROM RECYCLED WATER PUMPS

ED 31-I-002
TO BNR TRAIN NO. 2

1/2"-NAOH-PE-06
2"-NACL-CPVC-02
TO BNR HOSE BIBB

UK 90-I-003
SODIUM HYDROXIDE

1/2"-NAOH-CS-02

NAOH-V-0001
NAOH-V-0002
NAOH-V-0003

24V AIT 0001 pH

AE 0001 pH

BNR SPLITTER BOX

ANOXIC MIXER BNR-MXR-1001

BNR-G-0001
BNR-G-0002

AE 1101 DO

FINE BUBBLE DIFFUSER GRID

AE 1201 DO; AE 1002 MLSS

FINE BUBBLE DIFFUSER GRID

MIXED LIQUOR COLLECTION CHANNEL

MBR FEED PUMP BNR-P-1001

SCUM COLLECTION BOX

WAS-V-1001

24"-ML-SP
BNR-V-1001

36"-ML-SP
EB 32-I-001
MIXED LIQUOR TO MBR COMMON HEADER

24"-ML-SP

EF 31-I-002
FROM BNR BASIN NO. 2

6"-WAS-DIP

EC 31-I-003
TO SCUM/WAS WETWELL

BD 22-I-001 — 12"-WWS-DIP
FROM FINE SCREENS

MIXING CHIMNEY

AEROBIC ZONE

EG 31-I-002
FROM BIOLOGICAL REACTOR NO. 2 SCUM COLLECTION BOX

6"-WAS-DIP

OPEN BASIN CONNECTION - NOT PIPE - ML

EE 31-I-002
TO BIOLOGICAL REACTOR NO. 2

WALL OPENING - RAS

AIT 0001 TSS 24V

3"-WAS-PVC — 3"-WAS-DIP

EA 31-I-003
TO WAS PUMP

HS 0001 OO; HS 0001A E-STOP

AE 0001 TSS

SYSTEM CODE "RAS"

RAS DEOX MIXER RAS-MXR-0001

TSH 0001; MSH 0001

FH 32-I-002 — 14"-RAS-SP
FROM MBR TRAIN NO.2 RAS

FD 32-I-001 — 14"-RAS-SP
FROM MBR TRAIN NO.1 RAS

30"-RAS-HDPE — 30"-RAS-DIP

FO 32-I-007 — 6"-DRN-DIP
FROM BNR/MBR DRAIN PUMP

NOTES:

1. SEE LEGEND AND ABBREVIATIONS ON DRAWINGS 00-I-001, 00-1-002 AND 00-1-003.
2. AREA CODE IS 31 UNLESS OTHERWISE NOTED. SYSTEM CODE IS BNR UNLESS OTHERWISE NOTED.
3. LOCAL CONTROL DEVICES SUCH AS INDICATING LIGHTS AND SWITCHES, LOCATED ON MCCs OR AT DRIVEN EQUIPMENT, MAY NOT BE SHOWN ON THIS P&ID.

* ITEM FURNISHED BY PROCESS AIR BLOWER SYSTEM SUPPLIER.

90% SUBMITTAL - NOT FOR CONSTRUCTION

NO.	BY	CHK	APP'D	DATE	REVISIONS AND RECORD OF USE
B	BLB	TAH	EVB	7/30/2019	60% SUBMITTAL
A	BLB	TAH	EVB	3/5/2019	30% SUBMITTAL

REGISTERED PROFESSIONAL ENGINEER BRIAN L. BUTLER No. E 16569 ELECTRICAL STATE OF CALIFORNIA

BLACK & VEATCH

JOINT VENTURE

FILANC

BLACK & VEATCH

CITY OF MORRO BAY
MORRO BAY WATER RECLAMATION FACILITY (WRF)

TREATMENT AREA - BNR BASINS
P&ID
BASIN 1 & RAS DEOX

DESIGNED: BLB, KEZ
DETAILED: PVR
CHECKED: TAH
APPROVED:
DATE:

0 1/2 1
IF THIS BAR DOES NOT MEASURE 1" THEN DRAWING IS NOT TO FULL SCALE

PROJECT NO. 400530

31-I-001
SHEET OF

PLOTTED: 3/17/2020 5:00:49 PM
D400530

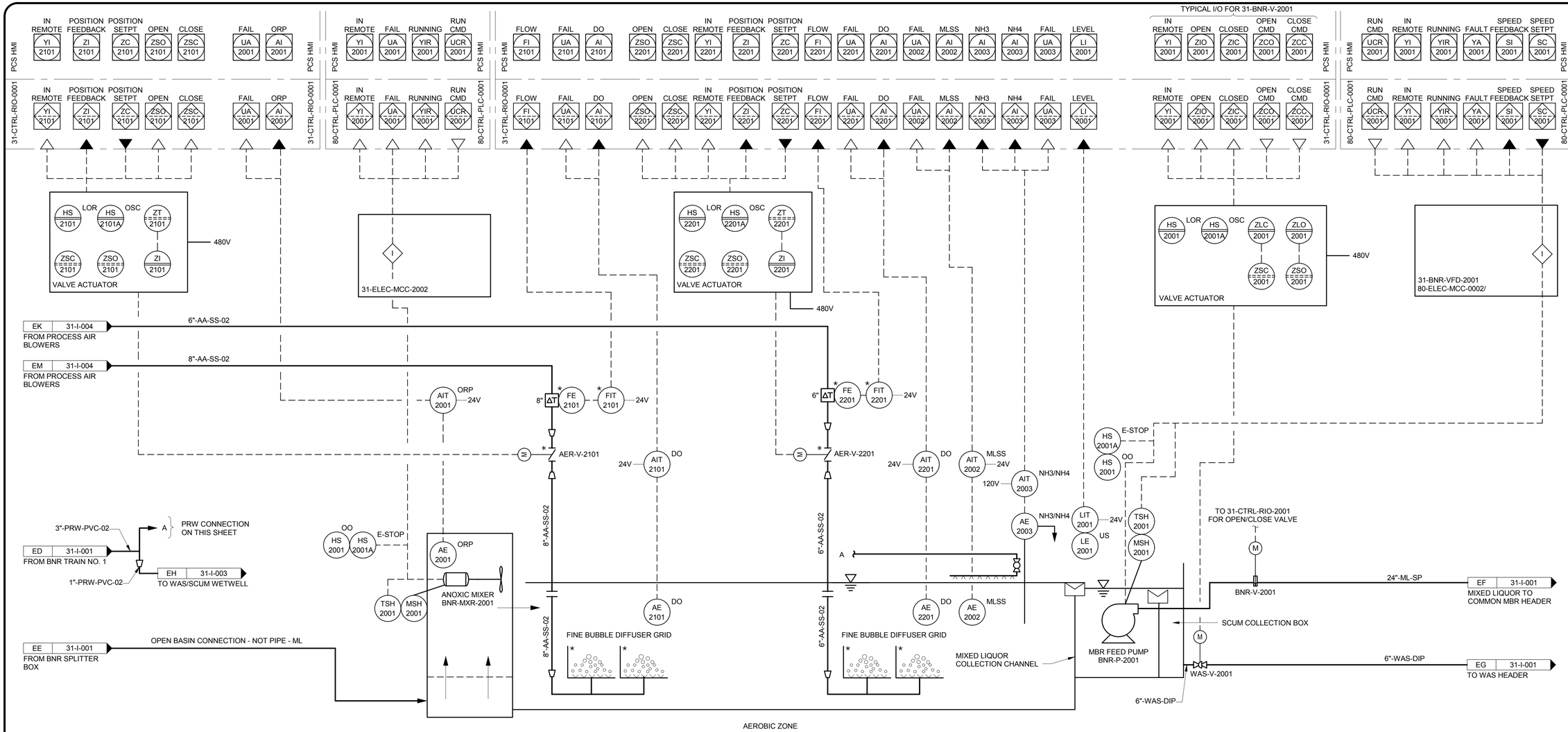

NOTES:

1. SEE LEGEND AND ABBREVIATIONS ON DRAWINGS 00-I-001, 00-1-002 AND 00-1-003.
2. AREA CODE IS 31 UNLESS OTHERWISE NOTED. SYSTEM CODE IS BNR UNLESS OTHERWISE NOTED.
3. LOCAL CONTROL DEVICES SUCH AS INDICATING LIGHTS AND SWITCHES, LOCATED ON MCCs OR AT DRIVEN EQUIPMENT, MAY NOT BE SHOWN ON THIS P&ID.

* ITEM FURNISHED BY PROCESS AIR BLOWER SYSTEM SUPPLIER.

90% SUBMITTAL - NOT FOR CONSTRUCTION

NO.	BY	CHK	APP'D	DATE	REVISIONS AND RECORD OF USE
B	BLB	TAH	EVB	7/30/2019	60% SUBMITTAL
A	BLB	TAH	EVB	3/5/2019	30% SUBMITTAL

REGISTERED PROFESSIONAL ENGINEER
BRIAN L. BUTLER
No. E 16569
STATE OF CALIFORNIA
ELECTRICAL

BLACK & VEATCH
JOINT VENTURE
FILANC

CITY OF MORRO BAY
MORRO BAY WATER RECLAMATION FACILITY (WRF)

TREATMENT AREA - BNR BASINS
P&ID
BASIN 2

DESIGNED: BLB, KEZ
DETAILED: PVR
CHECKED: TAH
APPROVED:
DATE:

0 1/2 1
IF THIS BAR DOES NOT MEASURE 1" THEN DRAWING IS NOT TO FULL SCALE

PROJECT NO. 400530

31-I-002
SHEET OF

PLOTTED: 3/17/2020 5:01:39 PM
D400530

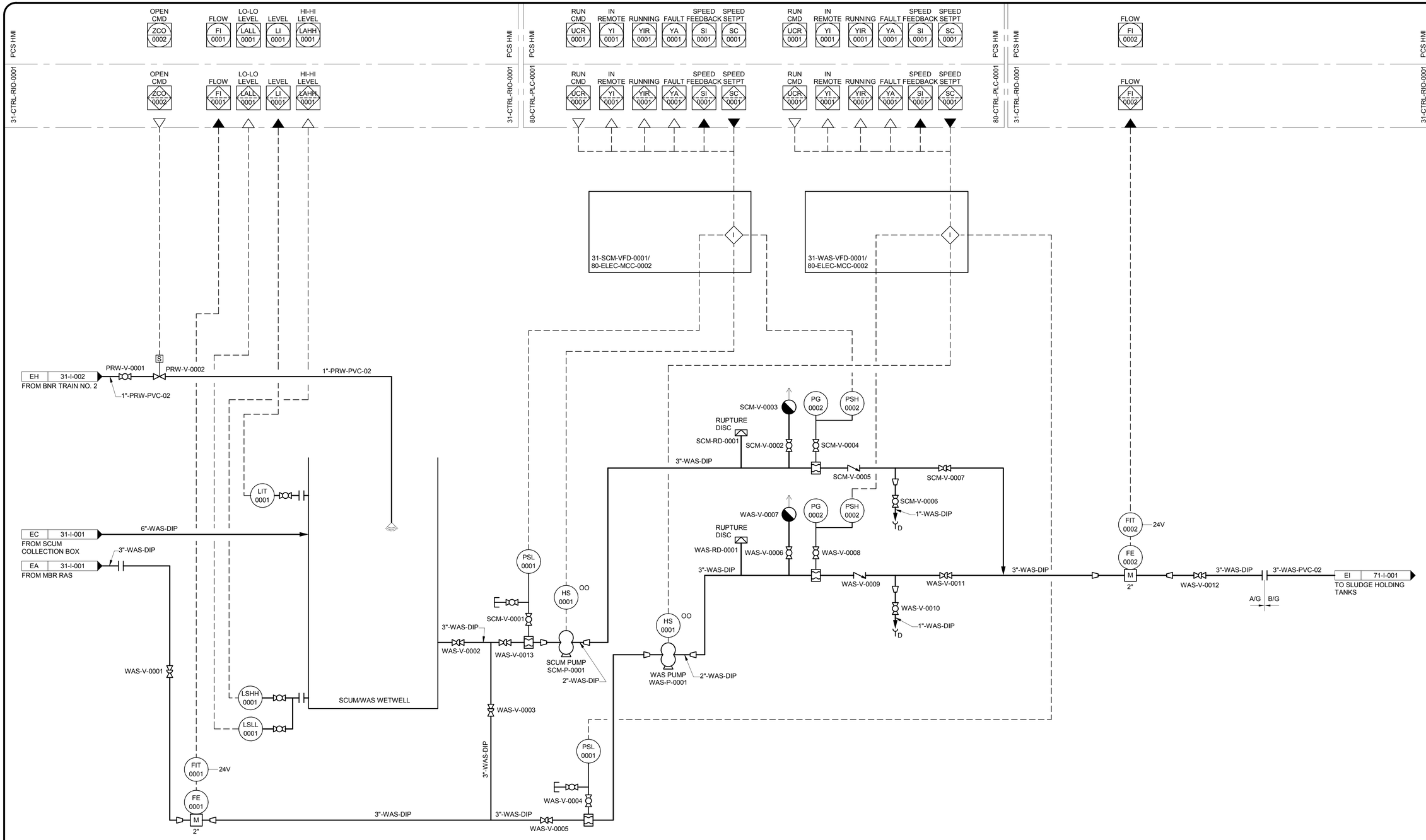

NOTES:

1. SEE LEGEND AND ABBREVIATIONS ON DRAWINGS 00-I-001, 00-1-002 AND 00-1-003.
2. AREA CODE IS 31 UNLESS OTHERWISE NOTED. SYSTEM CODE IS WAS UNLESS OTHERWISE NOTED.
3. LOCAL CONTROL DEVICES SUCH AS INDICATING LIGHTS AND SWITCHES, LOCATED ON MCCs OR AT DRIVEN EQUIPMENT, MAY NOT BE SHOWN ON THIS P&ID.

90% SUBMITTAL - NOT FOR CONSTRUCTION

NO.	BY	CHK	APP'D	DATE	REVISIONS AND RECORD OF USE
A	BLB	TAH	EVB	7/30/2019	60% SUBMITTAL
B	BLB	TAH	EVB	3/5/2019	30% SUBMITTAL

REGISTERED PROFESSIONAL ENGINEER
BRIAN L. BUTLER
No. E 16569
ELECTRICAL
STATE OF CALIFORNIA

BLACK & VEATCH
JOINT VENTURE
BLACK & VEATCH
FILANC

CITY OF MORRO BAY
MORRO BAY WATER
RECLAMATION FACILITY (WRF)

TREATMENT AREA - BNR BASINS
P&ID
WAS SYSTEM

DESIGNED: BLB, KEZ
DETAILED: PVR
CHECKED: TAH
APPROVED:
DATE:

0 1/2 1
IF THIS BAR DOES NOT MEASURE 1" THEN DRAWING IS NOT TO FULL SCALE

PROJECT NO.
400530

31-I-003
SHEET
OF

PLOTTED: 3/17/2020 5:01:44 PM
D400530

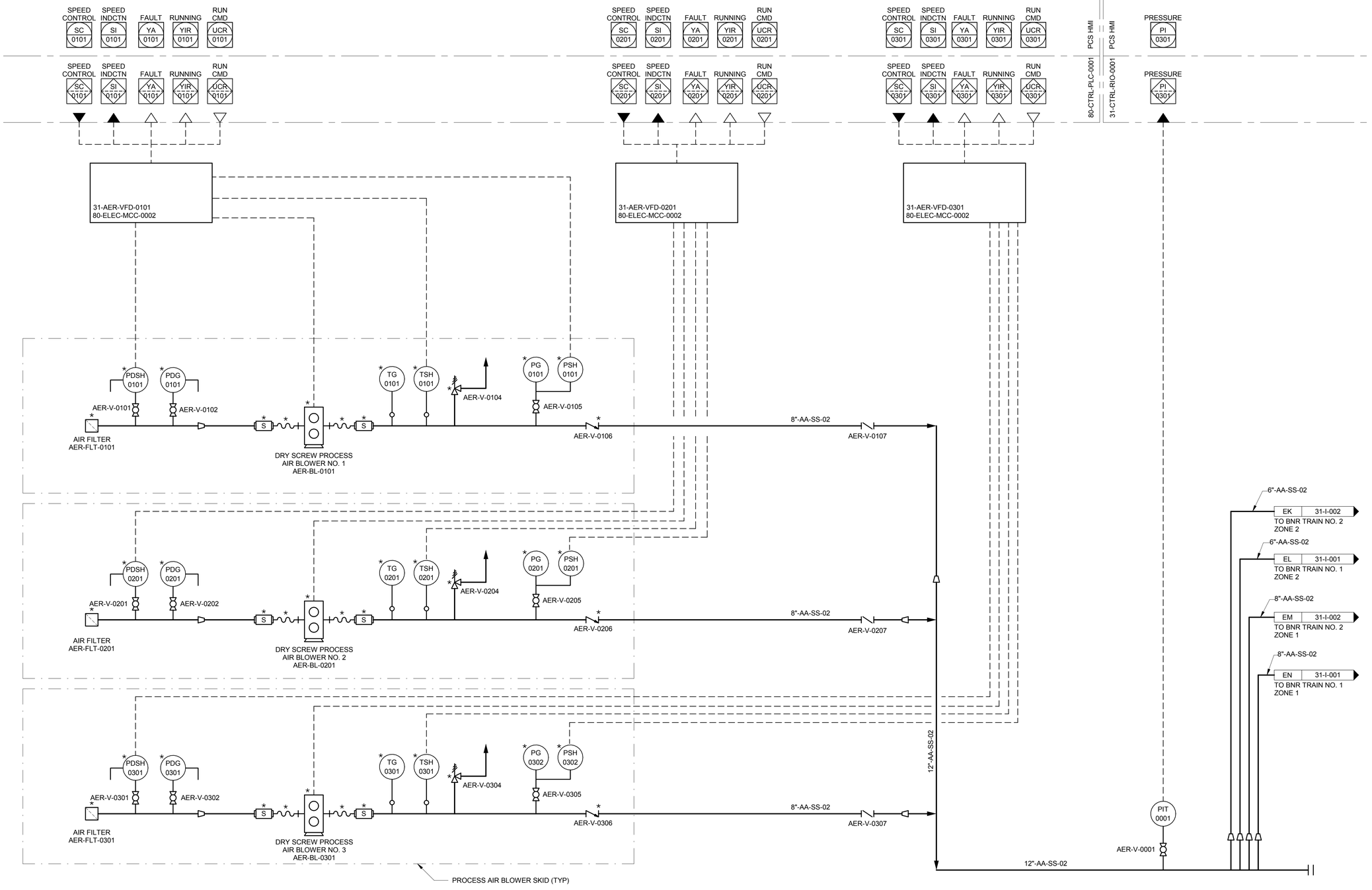

NOTES:

1. SEE LEGEND AND ABBREVIATIONS ON DRAWINGS 00-I-001, 00I-002 AND 00-I-003
2. LOCAL CONTROL DEVICES SUCH AS INDICATING LIGHTS AND SWITCHES, LOCATED ON MCCs OR AT DRIVEN EQUIPMENT, MAY NOT BE SHOWN ON THIS P&ID.
3. AREA CODE IS 31 UNLESS OTHERWISE NOTED. SYSTEM CODE IS AER UNLESS OTHERWISE NOTED.
4. INLET/FILTER/SILENCER, DRIVE, PANEL, BLOWER UNIT, SHALL ALL BE PROVIDED BY THE BLOWER MANUFACTURER, AS DESCRIBED IN SECTION 11370.

* ITEM FURNISHED BY PROCESS AIR BLOWER SYSTEM SUPPLIER.

90% SUBMITTAL- NOT FOR CONSTRUCTION

NO.	BY	CHK	APP'D	DATE	REVISIONS AND RECORD OF USE
B	BLB	TAH	EVB	7/30/2019	60% SUBMITTAL
A	BLB	TAH	EVB	3/5/2019	30% SUBMITTAL

REGISTERED PROFESSIONAL ENGINEER
BRIAN L. BUTLER
No. E 16569
ELECTRICAL
STATE OF CALIFORNIA

BLACK & VEATCH
JOINT VENTURE
BLACK & VEATCH
FILANC

CITY OF MORRO BAY
MORRO BAY WATER
RECLAMATION FACILITY (WRF)

TREATMENT AREA - BNR BASINS
P&ID
PROCESS AIR BLOWERS

DESIGNED: BLB, KEZ
DETAILED: PVR
CHECKED: TAH
APPROVED:
DATE:

0 1/2 1
IF THIS BAR DOES NOT MEASURE 1" THEN DRAWING IS NOT TO FULL SCALE

PROJECT NO. 400530

31-I-004
SHEET OF

PLOTTED: 3/17/2020 5:00:44 PM
D400530

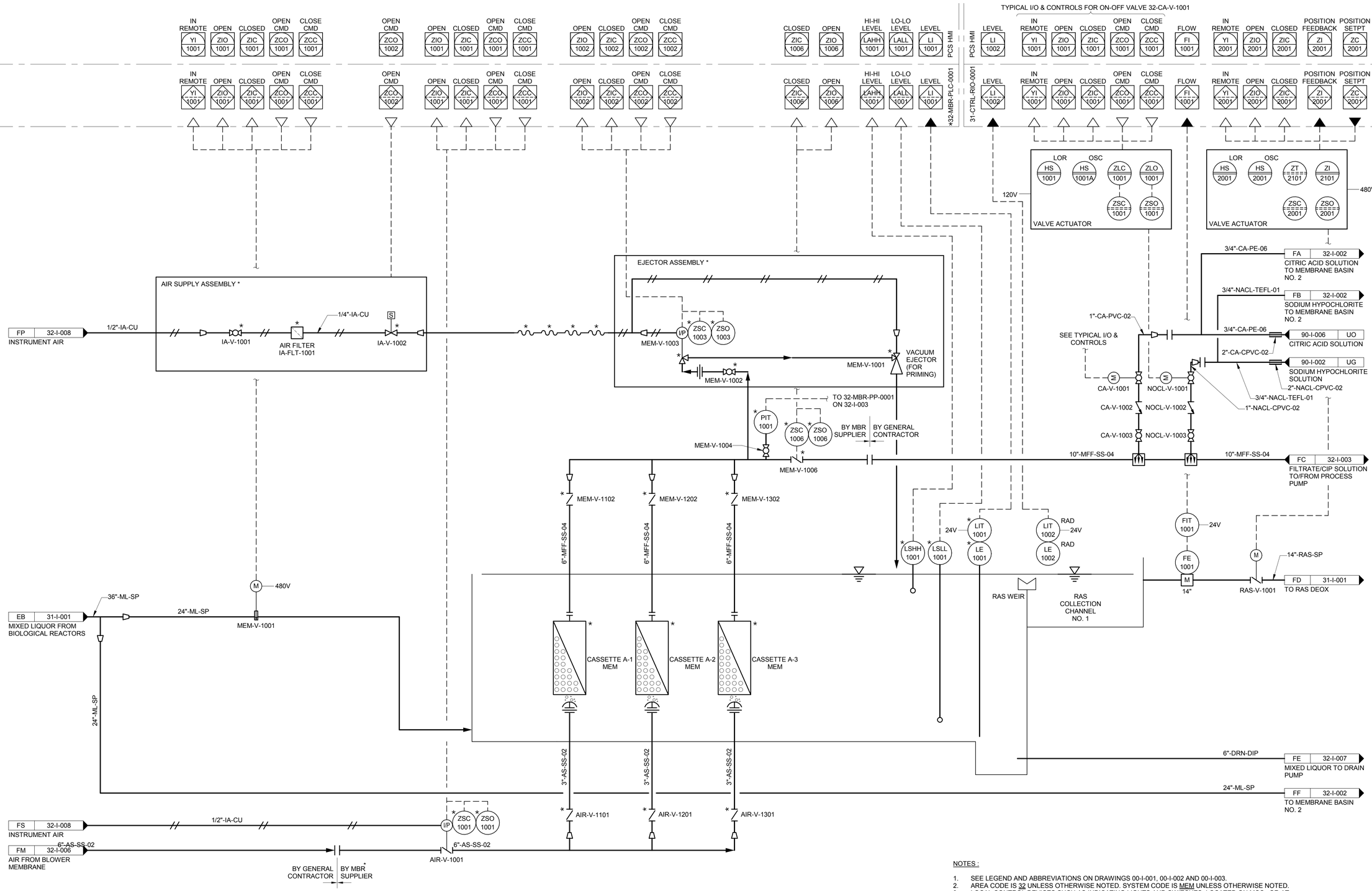

NOTES :

1. SEE LEGEND AND ABBREVIATIONS ON DRAWINGS 00-I-001, 00-I-002 AND 00-I-003.
2. AREA CODE IS 32 UNLESS OTHERWISE NOTED. SYSTEM CODE IS MEM UNLESS OTHERWISE NOTED.
3. LOCAL CONTROL DEVICES SUCH AS INDICATING LIGHTS AND SWITCHES, LOCATED ON MCCs OR AT DRIVEN EQUIPMENT, MAY NOT BE SHOWN ON THIS P&ID.
4. DRAWING TYPICAL FOR EVERY MEMBRANE TRAIN, WITH EXCEPTION OF COMMON PIPES.

* ITEM FURNISHED BY MBR SYSTEM SUPPLIER.

90% SUBMITTAL - NOT FOR CONSTRUCTION

NO.	BY	CHK	APP	DATE	REVISIONS AND RECORD OF USE
B	BLB	TAH	EVB	7/30/2019	60% SUBMITTAL
A	BLB	TAH	EVB	3/5/2019	30% SUBMITTAL

REGISTERED PROFESSIONAL ENGINEER BRIAN L. BUTLER No. E 16569 STATE OF CALIFORNIA ELECTRICAL

BLACK & VEATCH JOINT VENTURE BLACK & VEATCH FILANC

CITY OF MORRO BAY
MORRO BAY WATER RECLAMATION FACILITY (WRF)

TREATMENT AREA - MBR SYSTEM P&ID
MEMBRANE BASIN 1

DESIGNED: BLB, KEZ
DETAILED: PVR
CHECKED: TAH
APPROVED:
DATE:

0 1/2 1
IF THIS BAR DOES NOT MEASURE 1" THEN DRAWING IS NOT TO FULL SCALE

PROJECT NO. 400530

32-I-001
SHEET OF

PLOTTED: 3/17/2020 5:00:54 PM
D400530

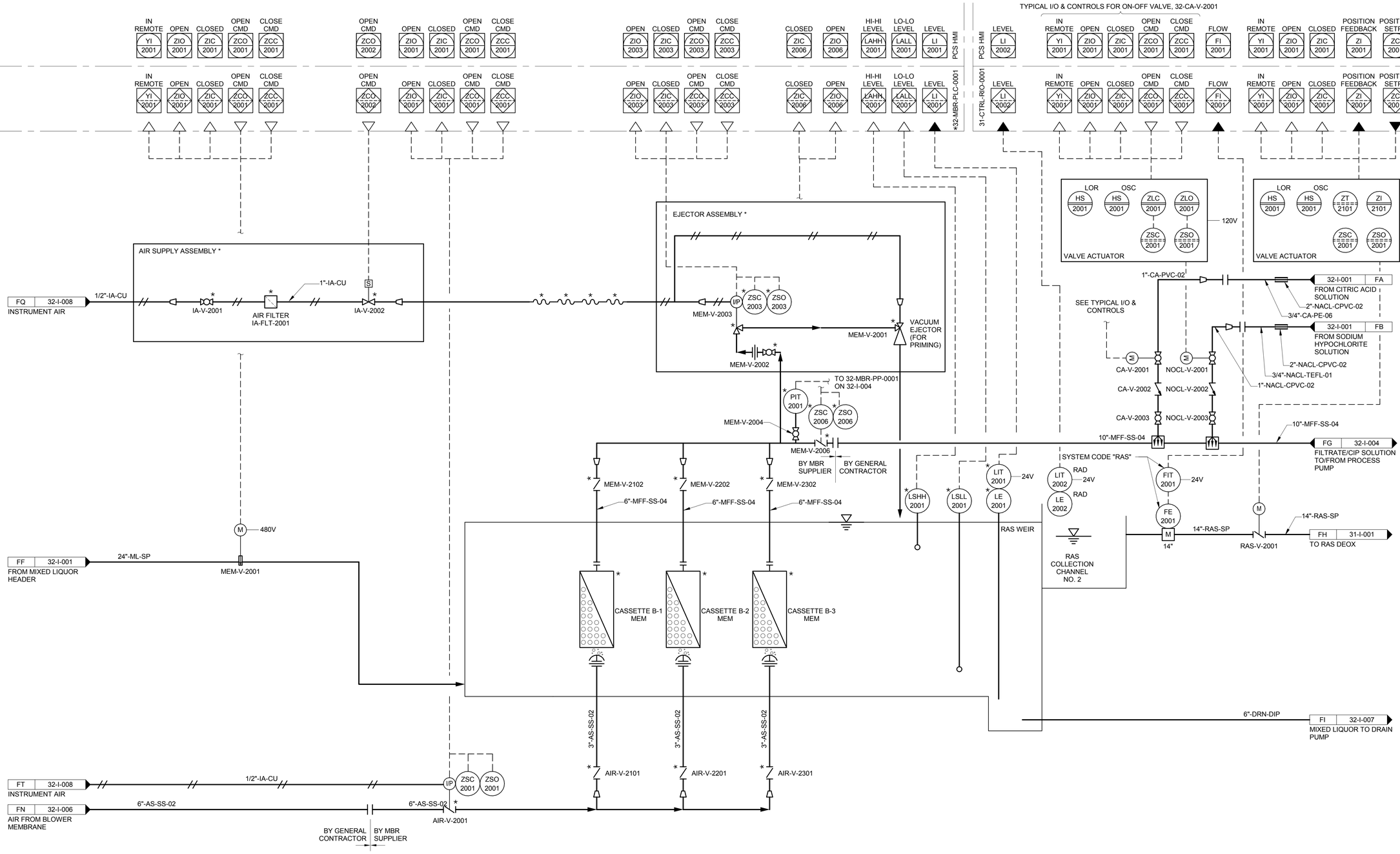

NOTES :

1. SEE LEGEND AND ABBREVIATIONS ON DRAWINGS 00-I-001, 00-I-002 AND 00-I-003.
2. AREA CODE IS 32 UNLESS OTHERWISE NOTED. SYSTEM CODE IS MEM UNLESS OTHERWISE NOTED.
3. LOCAL CONTROL DEVICES SUCH AS INDICATING LIGHTS AND SWITCHES, LOCATED ON MCCs OR AT DRIVEN EQUIPMENT, MAY NOT BE SHOWN ON THIS P&ID.
4. DRAWING TYPICAL FOR EVERY MEMBRANE TRAIN, WITH EXCEPTION OF COMMON PIPES.

* ITEM FURNISHED BY MBR SYSTEM SUPPLIER

90% SUBMITTAL - NOT FOR CONSTRUCTION

NO.	BY	CHK	APP	DATE	REVISIONS AND RECORD OF USE
B	BLB	TAH	EVB	7/30/2019	60% SUBMITTAL
A	BLB	TAH	EVB	3/5/2019	30% SUBMITTAL

REGISTERED PROFESSIONAL ENGINEER BRIAN L. BUTLER No. E 16569 STATE OF CALIFORNIA ELECTRICAL

BLACK & VEATCH JOINT VENTURE BLACK & VEATCH FILANC

CITY OF MORRO BAY
MORRO BAY WATER RECLAMATION FACILITY (WRF)

TREATMENT AREA - MBR SYSTEM
P&ID
MEMBRANE BASIN 2

DESIGNED: BLB, KEZ
DETAILED: PVR
CHECKED: TAH
APPROVED:
DATE:

0 1/2 1
IF THIS BAR DOES NOT MEASURE 1" THEN DRAWING IS NOT TO FULL SCALE

PROJECT NO. 400530

32-I-002
SHEET OF

PLOTTED: 3/17/2020 5:01:00 PM
D400530

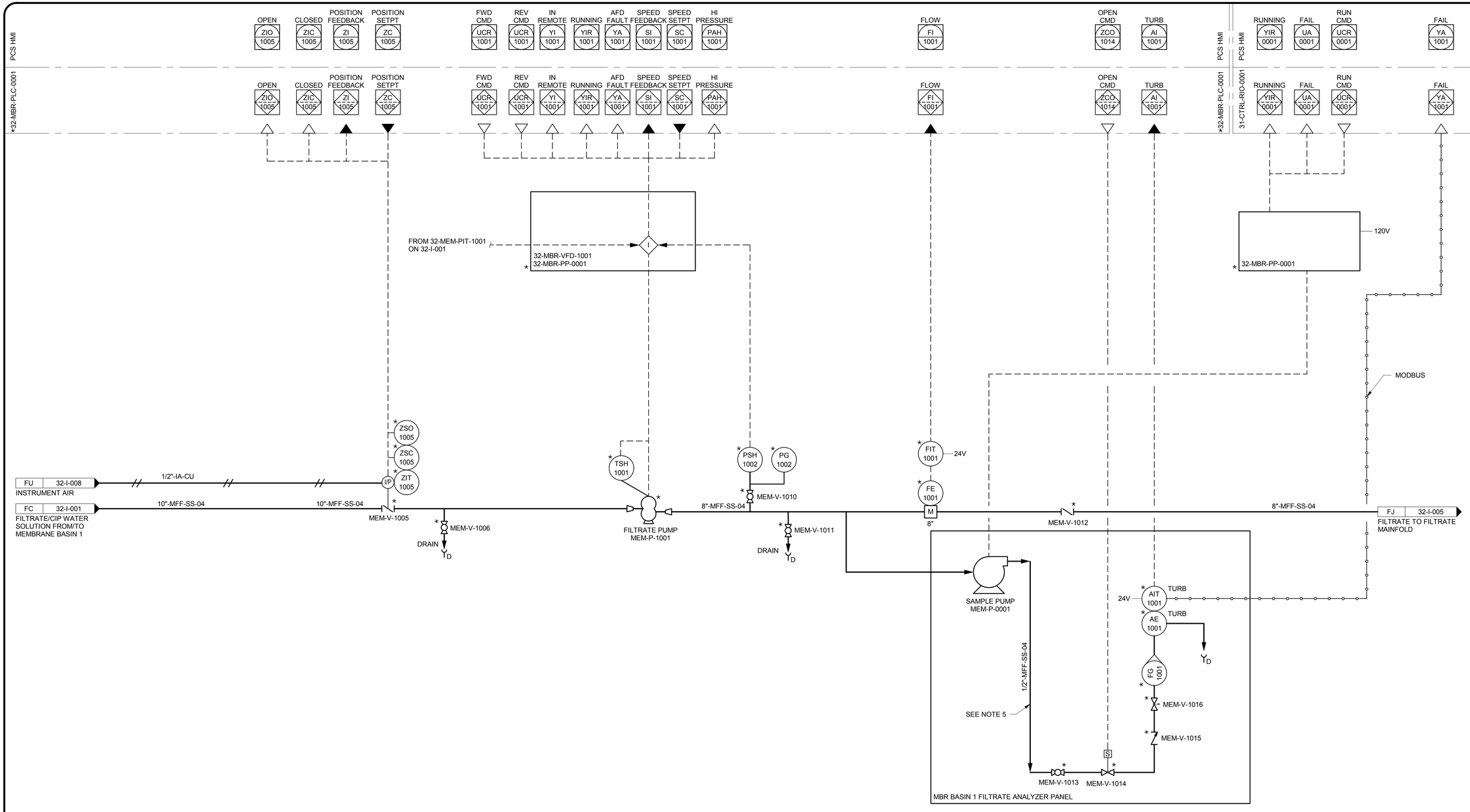

NOTES:

1. SEE LEGEND AND ABBREVIATIONS ON DRAWINGS 00-I-001, 00-I-002 AND 00-I-003.
2. AREA CODE IS 32 UNLESS OTHERWISE NOTED. SYSTEM CODE IS MEM UNLESS OTHERWISE NOTED.
3. LOCAL CONTROL DEVICES SUCH AS INDICATING LIGHTS AND SWITCHES, LOCATED ON MCCs OR AT DRIVEN EQUIPMENT, MAY NOT BE SHOWN ON THIS P&ID.
4. PRIMING SYSTEM CONNECTION AND PRESSURE TRANSMITTER MUST BE LOCATED AT HIGH POINT OF MEMBRANE TANK HEADER.
5. TURBIDIMETER SHALL BE INSTALLED PER MANUFACTURER'S RECOMMENDATIONS.

* ITEM FURNISHED BY MBR SYSTEM SUPPLIER.

90% SUBMITTAL - NOT FOR CONSTRUCTION

NO.	BY	CHK	APP
B	BLB	TAH	EVB
A	BLB	TAH	EVB

DATE	REVISIONS AND RECORD OF USE
7/30/2019	60% SUBMITTAL
3/5/2019	30% SUBMITTAL

REGISTERED PROFESSIONAL ENGINEER
BRIAN L. BUTLER
No. E 16569
ELECTRICAL
STATE OF CALIFORNIA

BLACK & VEATCH
JOINT VENTURE
BLACK & VEATCH
FILANC

CITY OF MORRO BAY
MORRO BAY WATER
RECLAMATION FACILITY (WRF)

TREATMENT AREA - MBR SYSTEM
P&ID
FILTRATE PUMP, BASIN 1

DESIGNED: BLB, KEZ
DETAILED: PVR
CHECKED: TAH
APPROVED:
DATE:

0 1/2 1
IF THIS BAR DOES NOT MEASURE 1" THEN DRAWING IS NOT TO FULL SCALE

PROJECT NO.
400530

32-I-003
SHEET
OF

PLOTTED: 3/17/2020 5:01:05 PM
D400530

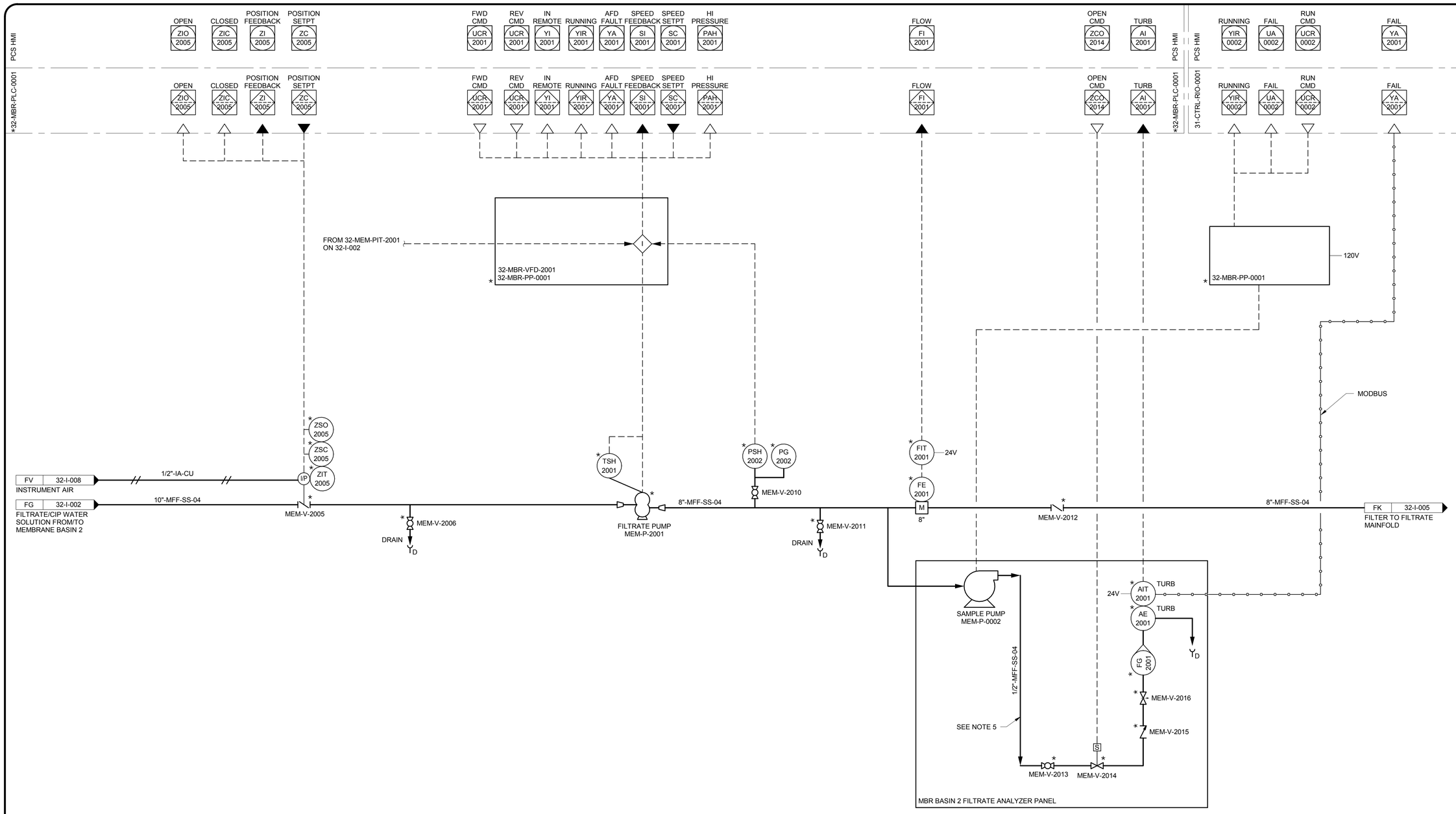

NOTES:

1. SEE LEGEND AND ABBREVIATIONS ON DRAWINGS 00-I-001, 00-I-002 AND 00-I-003.
2. AREA CODE IS 32 UNLESS OTHERWISE NOTED. SYSTEM CODE IS MEM UNLESS OTHERWISE NOTED.
3. LOCAL CONTROL DEVICES SUCH AS INDICATING LIGHTS AND SWITCHES, LOCATED ON MCCs OR AT DRIVEN EQUIPMENT, MAY NOT BE SHOWN ON THIS P&ID.
4. PRIMING SYSTEM CONNECTION AND PRESSURE TRANSMITTER MUST BE LOCATED AT HIGH POINT OF MEMBRANE TANK HEADER.
5. TURBIDIMETER SHALL BE INSTALLED PER MANUFACTURER'S RECOMMENDATIONS.

* ITEM FURNISHED BY MBR SYSTEM SUPPLIER.

90% SUBMITTAL - NOT FOR CONSTRUCTION

NO.	BY	CHK	APP'D	DATE	REVISIONS AND RECORD OF USE
B	BLB	TAH	EVB	7/30/2019	60% SUBMITTAL
A	BLB	TAH	EVB	3/5/2019	30% SUBMITTAL

REGISTERED PROFESSIONAL ENGINEER
BRIAN L. BUTLER
No. E 16569
ELECTRICAL
STATE OF CALIFORNIA

BLACK & VEATCH
JOINT VENTURE
BLACK & VEATCH
FILANC

CITY OF MORRO BAY
MORRO BAY WATER
RECLAMATION FACILITY (WRF)

TREATMENT AREA - MBR SYSTEM
P&ID
FILTRATE PUMP, BASIN 2

DESIGNED: BLB, KEZ
DETAILED: PVR
CHECKED: TAH
APPROVED:
DATE:

0 1/2 1
IF THIS BAR DOES NOT MEASURE 1" THEN DRAWING IS NOT TO FULL SCALE

PROJECT NO.
400530

32-I-004
SHEET
OF

PLOTTED: 3/17/2020 5:01:09 PM
D400530

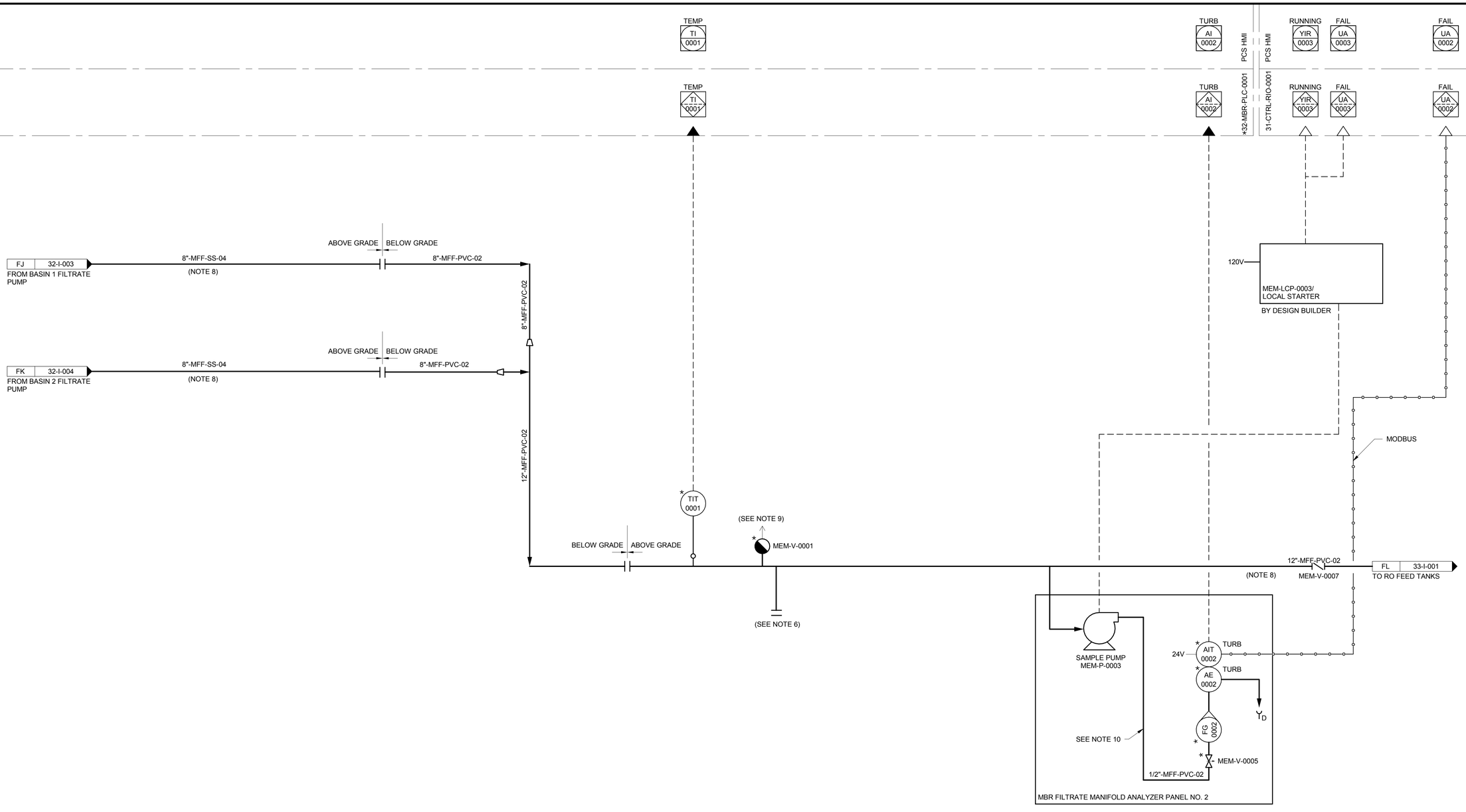

NOTES:

1. SEE LEGEND AND ABBREVIATIONS ON DRAWINGS 00-I-001, 00-I-002 AND 00-I-003.
2. AREA CODE IS 32 UNLESS OTHERWISE NOTED. SYSTEM CODE IS MEM UNLESS OTHERWISE NOTED.
3. LOCAL CONTROL DEVICES SUCH AS INDICATING LIGHTS AND SWITCHES, LOCATED ON MCC's OR AT DRIVEN EQUIPMENT, MAY NOT BE SHOWN ON THIS P&ID.
4. FLOOR DRAINS TO BE PROVIDED AND PIPED INTO BY GENERAL CONTRACTOR, AS REQUIRED.
5. ALL EQUIPMENT ON THIS SHEET IS DESIGNED TO BE INSTALLED IN A NON-CLASSIFIED AREA (PER NFPA 820)
6. CAPPED CONNECTION FOR RECIRCULATION BACK TO THE BIOREACTOR DURING START-UP. TEMPORARY PIPING IS PROVIDED BY OTHERS.
7. FINAL SIZING AND DESIGN TO BE VERIFIED DURING DETAIL PROJECT ENGINEERING.
8. SCH80 PVC IS ACCEPTABLE.
9. COMBINATION VACUUM BREAK/AIR RELEASE, AS REQUIRED.
10. TURBIDITY SHALL BE INSTALLED PER MANUFACTURER'S RECOMMENDATIONS.

* ITEM FURNISHED BY MBR SYSTEM SUPPLIER.

90% SUBMITTAL- NOT FOR CONSTRUCTION

NO.	BY	CHK	APP
B	BLB	TAH	EVB
A	BLB	TAH	EVB

REVISIONS AND RECORD OF USE

DATE	
7/30/2019	60% SUBMITTAL
3/5/2019	30% SUBMITTAL

REGISTERED PROFESSIONAL ENGINEER
BRIAN L. BUTLER
No. E 16569
ELECTRICAL
STATE OF CALIFORNIA

BLACK & VEATCH

JOINT VENTURE

BLACK & VEATCH

FILANC

CITY OF MORRO BAY
MORRO BAY WATER
RECLAMATION FACILITY (WRF)

TREATMENT AREA - MBR SYSTEM
P&ID
FILTRATE MANIFOLD

DESIGNED: BLB, KEZ
DETAILED: PVR
CHECKED: TAH
APPROVED:
DATE:

0 1/2 1
IF THIS BAR DOES NOT MEASURE 1" THEN DRAWING IS NOT TO FULL SCALE

PROJECT NO.
400530

32-I-005
SHEET
OF

PLOTTED: 3/17/2020 5:01:14 PM
D400530

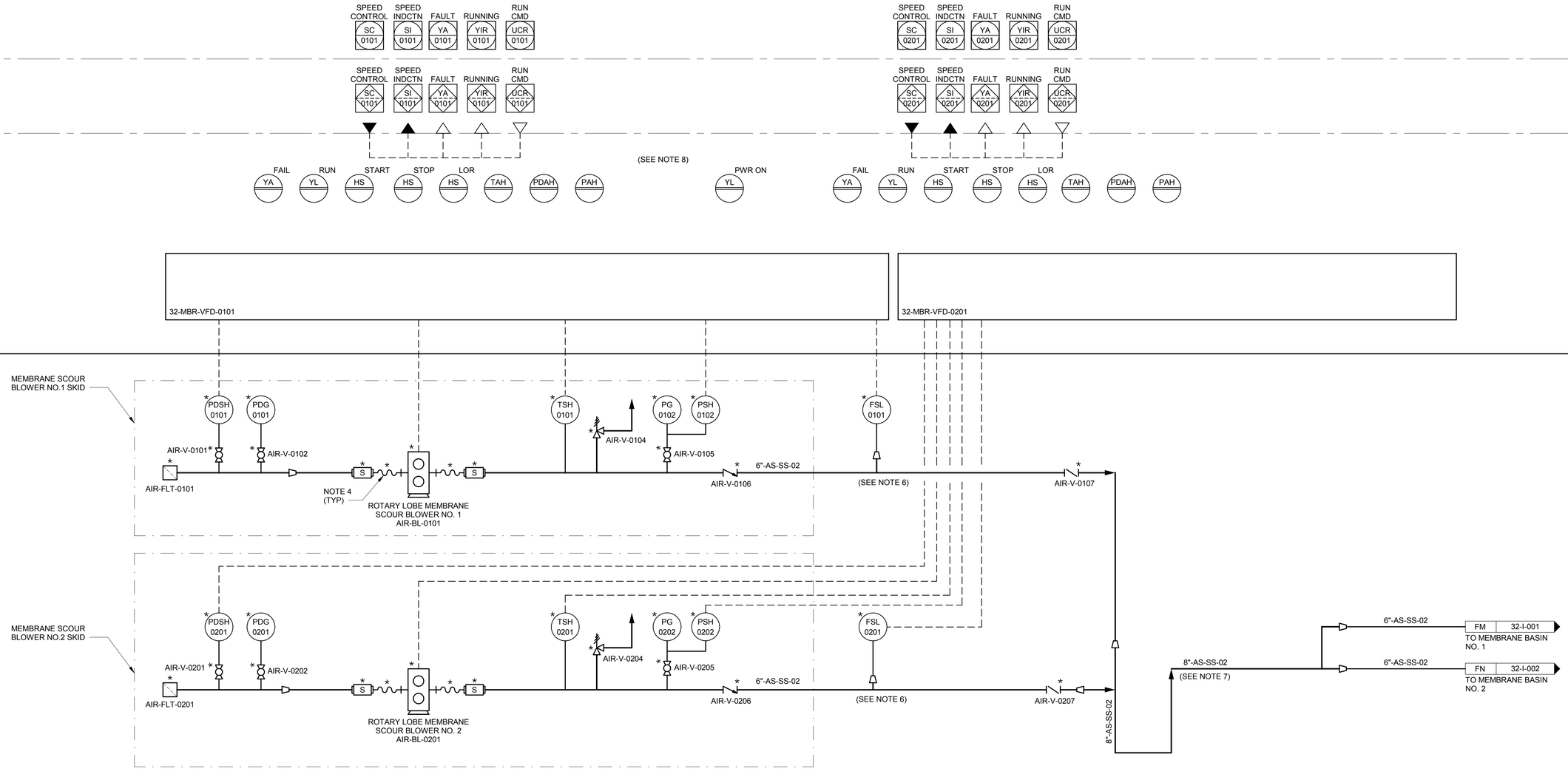

NOTES:

1. SEE LEGEND AND ABBREVIATIONS ON DRAWING 00-I-001, 00-I-002 AND 00-I-003.
2. AREA CODE IS 32 UNLESS OTHERWISE NOTED. SYSTEM CODE IS AIR UNLESS OTHERWISE NOTED.
3. LOCAL CONTROL DEVICES SUCH AS INDICATING LIGHTS AND SWITCHES, LOCATED IN MCC's OR AT DRIVEN EQUIPMENT MAY NOT INDICATED ON THIS P&ID.
4. BLOWER FLEXIBLE CONNECTION.
5. ALL EQUIPMENT ON THIS SHEET DESIGNED TO BE INSTALLED IN A NON-CLASSIFIED AREA (PER NFPA 820)
6. A PORTION OF THE AIR LINE NEEDS TO BE HIGHER THAN THE TANK OPERATING LEVEL TO PREVENT WATER BACK FLOW.
7. FINAL SIZING AND DESIGN TO BE VERIFIED DURING PROJECT ENGINEERING.
8. HANDSWITCHES, PUSHBUTTONS AND INDICATING LIGHTS ARE DELETED IF AN OIT IS PROVIDED.

* ITEM FURNISHED BY MBR SYSTEM SUPPLIER.

90% SUBMITTAL - NOT FOR CONSTRUCTION

NO.	BY	CHK	APP	DATE	REVISIONS AND RECORD OF USE
B	BLB	TAH	EVB	7/30/2019	60% SUBMITTAL
A	BLB	TAH	EVB	3/5/2019	30% SUBMITTAL

REGISTERED PROFESSIONAL ENGINEER BRIAN L. BUTLER No. E 16569 ELECTRICAL STATE OF CALIFORNIA

BLACK & VEATCH

JOINT VENTURE

BLACK & VEATCH

FILANC

CITY OF MORRO BAY
MORRO BAY WATER
RECLAMATION FACILITY (WRF)

TREATMENT AREA - MBR SYSTEM
P&ID
MBR SCOUR AIR BLOWERS

DESIGNED: BLB, KEZ
DETAILED: PVR
CHECKED: TAH
APPROVED:
DATE:

0 1/2 1
IF THIS BAR DOES NOT MEASURE 1" THEN DRAWING IS NOT TO FULL SCALE

PROJECT NO. 400530

32-I-006
SHEET OF

PLOTTED: 3/17/2020 5:01:33 PM
D400530

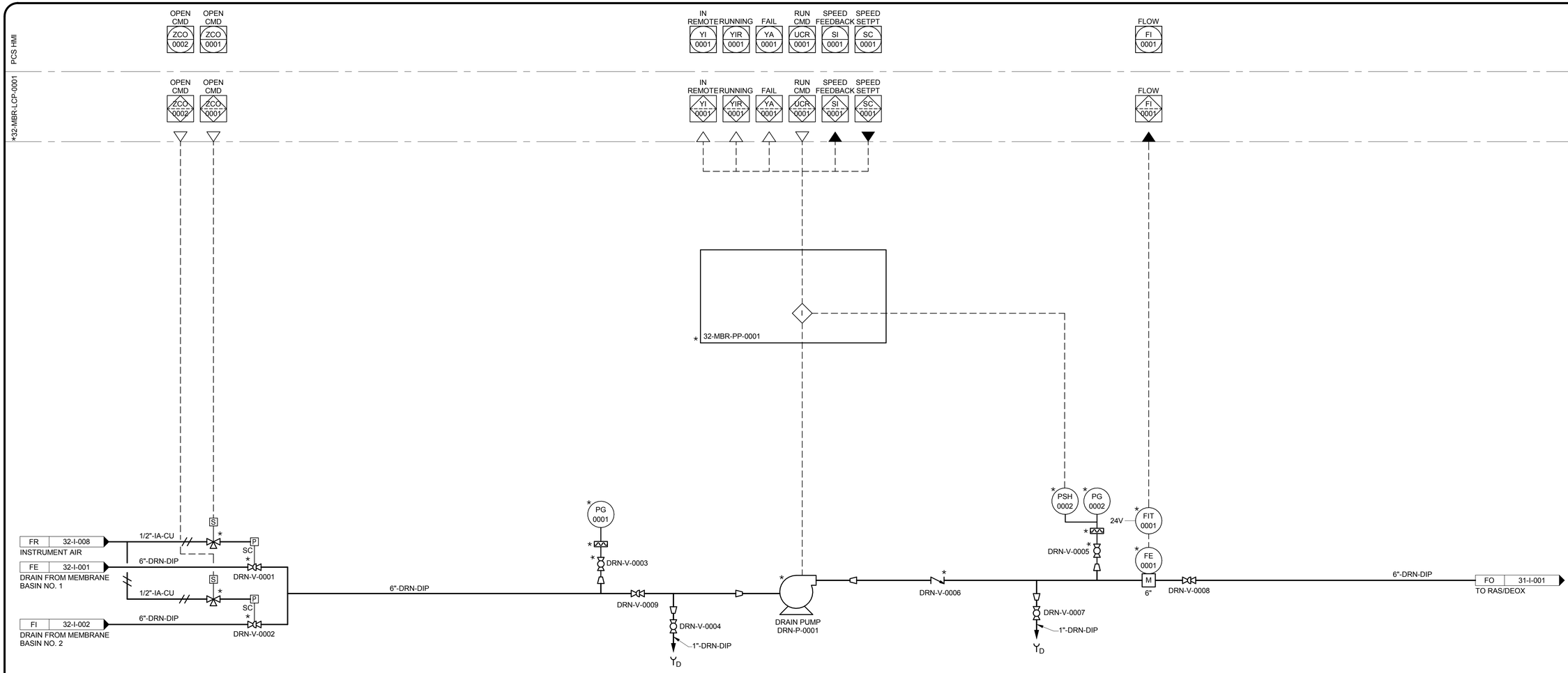

NOTES:

1. SEE LEGEND AND ABBREVIATIONS ON DRAWING 00-I-001, 00-I-002 AND 00-I-003.
2. AREA CODE IS 32 UNLESS OTHERWISE NOTED. SYSTEM CODE IS DRN UNLESS OTHERWISE NOTED.
3. LOCAL CONTROL DEVICES SUCH AS INDICATING LIGHTS AND SWITCHES, LOCATED ON MCC's OR AT DRIVEN EQUIPMENT, MAY NOT BE SHOWN ON THIS P&ID.
4. FLOOR DRAINS TO BE PROVIDED AND PIPED INTO BY GENERAL CONTRACTOR, AS REQUIRED.
5. BUTTERFLY VALVES ARE USED ON WASTE WATER AND MIXED LIQUOR SERVICES
6. DESIGN ENGINEER TO BE INSURE THERE ENOUGH BACK PRESSURE IN THIS LINE IN TO ALLOW FOR WAS REMOVAL REFER TO NEXT NOTE FOR MORE DETAILS.
7. OPTIONAL VALVE CAN BE ACTUATED TO BE ABLE TO AUTOMATICALLY THROTTLE THE LINE IN ORDER TO CREATE BACK PRESSURE FOR SLUDGE WASTING - REFER TO PREVIOUS NOTE.
8. 5 PIPES DIAMETERS UPSTREAM, 3 PIPE DIAMETERS DOWN STREAM, STRAIGHT PIE RUN RECOMMENDED FOR MAXIMUM ACCURACY. PIPE MUST BE ARRANGED SO MAG IS ALWAYS FLOODED.
9. ALL EQUIPMENT ON THIS SHEET IS DESIGNED TO BE INSTALLED IN A NON-CLASSIFIED AREA (PER NFPA 820).

* ITEM FURNISHED BY MBR SYSTEM SUPPLIER.

90% SUBMITTAL - NOT FOR CONSTRUCTION

NO.	BY	CHK	APP	DATE	REVISIONS AND RECORD OF USE
B	BLB	TAH	EVB	7/30/2019	60% SUBMITTAL
A	BLB	TAH	EVB	3/5/2019	30% SUBMITTAL

REGISTERED PROFESSIONAL ENGINEER
BRIAN L. BUTLER
No. E 16569
ELECTRICAL
STATE OF CALIFORNIA

BLACK & VEATCH

JOINT VENTURE

FILANC

BLACK & VEATCH

CITY OF MORRO BAY
MORRO BAY WATER
RECLAMATION FACILITY (WRF)

TREATMENT AREA - MBR SYSTEM
P&ID
TANK DRAIN PUMP

DESIGNED: BLB, KEZ
DETAILED: PVR
CHECKED: TAH
APPROVED:
DATE:

0 1/2 1
IF THIS BAR DOES NOT MEASURE 1" THEN DRAWING IS NOT TO FULL SCALE

PROJECT NO. 400530

32-I-007
SHEET OF

PLOTTED: 3/17/2020 5:01:18 PM
D400530

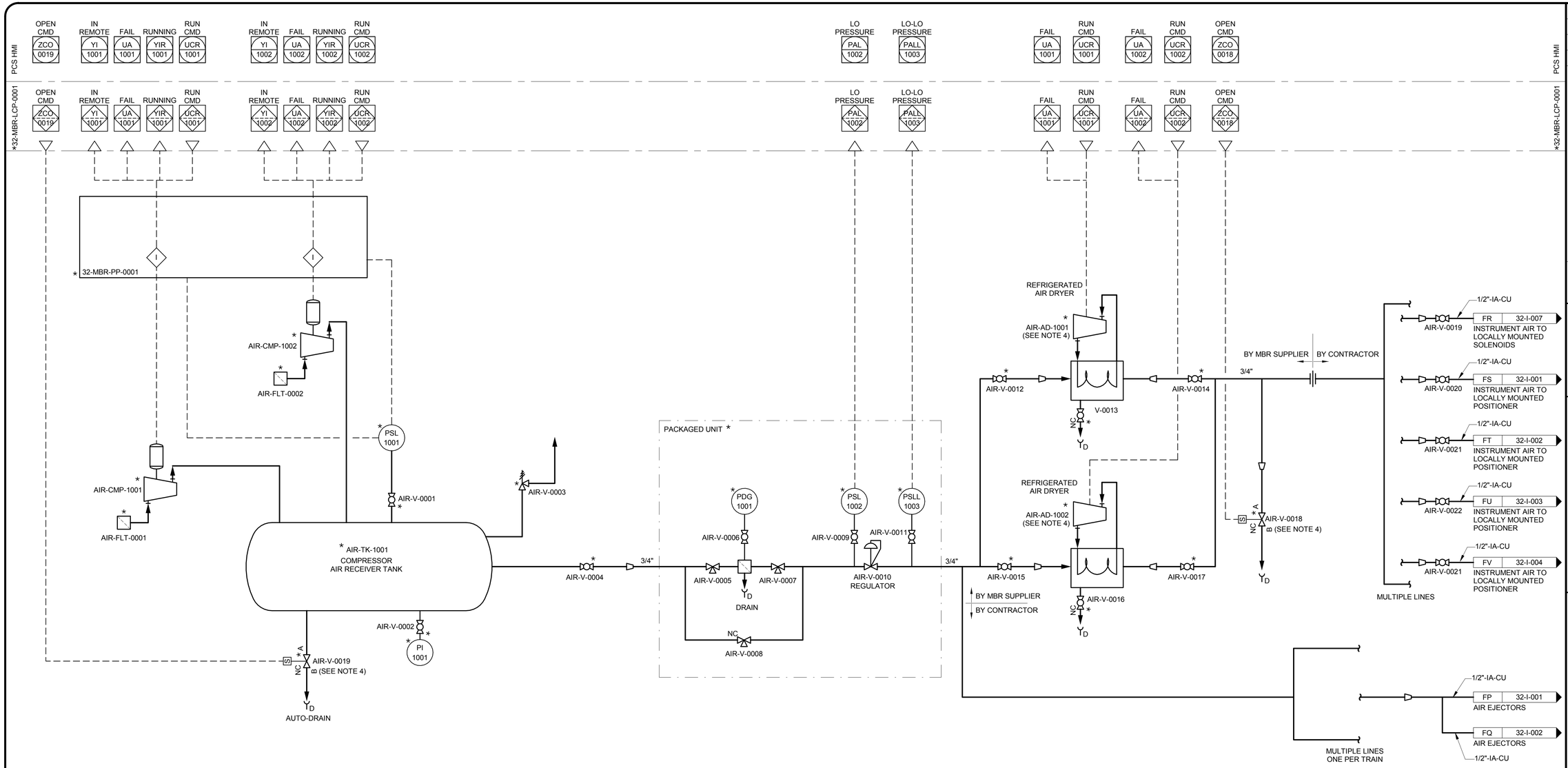

NOTES:

1. SEE LEGEND AND ABBREVIATIONS ON DRAWINGS 00-I-001, 00-I-002 AND 00-I-003.
2. AREA CODE IS 32 UNLESS OTHERWISE NOTED. SYSTEM CODE IS AIR UNLESS OTHERWISE NOTED.
3. COMPRESSOR PACKAGE PROVIDED BY THE MBR SYSTEM SUPPLIER.
4. 120 VAC POWER SUPPLY FROM 32-MBR-PP-0001 PANEL.

* ITEM FURNISHED BY MBR SYSTEM SUPPLIER.

90% SUBMITTAL - NOT FOR CONSTRUCTION

NO.	BY	CHK'D APP'D	DATE	REVISIONS AND RECORD OF USE

REGISTERED PROFESSIONAL ENGINEER BRIAN L. BUTLER No. E 16569 ELECTRICAL STATE OF CALIFORNIA

BLACK & VEATCH JOINT VENTURE BLACK & VEATCH FILANC

CITY OF MORRO BAY
MORRO BAY WATER RECLAMATION FACILITY (WRF)

P&ID
MBR AREA - AIR COMPRESSOR SYSTEM

DESIGNED: BLB, KEZ
DETAILED: VSD
CHECKED: TAH
APPROVED:
DATE:

0 1/2 1
IF THIS BAR DOES NOT MEASURE 1" THEN DRAWING IS NOT TO FULL SCALE

PROJECT NO. 400530

32-I-008
SHEET OF

PLOTTED: 3/17/2020 5:01:49 PM
D400530

PCS HMI

31-CTRL-RIO-0001

LO-LO LEVEL LALL 0101 | HI-HI LEVEL LAHH 0101 | LEVEL LI 0101

LO-LO LEVEL LALL 0201 | LEVEL LI 0201 | HI-HI LEVEL LAHH 0201

NH3 AI 0001 | FAIL UA 0001

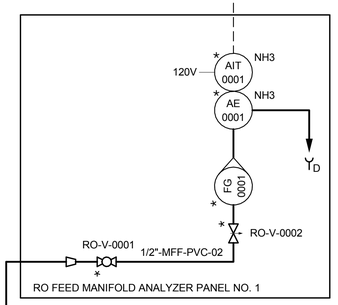

1/2"-NACL-CPVC-02

2"-NACL-CPVC-02

UC | 90-I-001
SODIUM HYPOCHLORITE

1"-NACL-CPVC-02

NACL-V-0011 NACL-V-0012 NACL-V-0013

US | 90-I-009
LIQUID AMMONIA SULFATE

2"-LAS-CPVC-02

1/2"-LAS-PVC-02

1"-LAS-PVC-02

A/G B/G 18"-MFF-HDPE

GB | 51-I-001
TO RO FEED CONDITIONING

RO FEED TANK 1
RO-T-0101

RO FEED TANK 2
RO-T-0201

12"-MFF-PVC-02

18"-MFF-PVC-02

LAS-V-0001 LAS-V-0002 LAS-V-0003

4"-PRW-PVC-02

GA | 34-I-001
TO RECYCLED WATER PUMPS

FL | 32-I-005
FROM MBR FILTRATE MANIFOLD

12"-MFF-PVC-02

RO-V-0101

LIT 0101

RO-V-0102

LSHH 0101

RO-V-0106

LSLL 0101

RO-V-0105

RO-V-0104

3"-DRN-DIP

TO SEWER

12"-MFF-PVC-02

RO-V-0103

12"-MFF-PVC-02

RO-V-0201

LIT 0201

RO-V-0202

LSHH 0201

RO-V-0206

LSLL 0201

RO-V-0205

3"-DRN-DIP

RO-V-0204

TO SEWER

12"-MFF-PVC-02

RO-V-0203

A/G B/G 12"-MFF-HDPE

GC | 64-I-001
TO OUTFALL BALANCING TANK

12"-MFF-PVC-02

NOTES:

1. SEE LEGEND AND ABBREVIATIONS ON DRAWINGS 00-I-001, 00-1-002 AND 00-1-003.
2. AREA CODE IS 33 UNLESS OTHERWISE NOTED. SYSTEM CODE IS RO UNLESS OTHERWISE NOTED.
3. LOCAL CONTROL DEVICES SUCH AS INDICATING LIGHTS AND SWITCHES, LOCATED ON MCCs OR AT DRIVEN EQUIPMENT, MAY NOT BE SHOWN ON THIS P&ID.

* AMMONIA ANALYZER PROVIDED BY MBR SYSTEM SUPPLIER AND SHIPPED LOOSE.

90% SUBMITTAL- NOT FOR CONSTRUCTION

NO.	BY	CHK	APP'D
B	BLB	TAH	EVB
A	BLB	TAH	EVB

REVISIONS AND RECORD OF USE

DATE
7/30/2019
3/5/2019

60% SUBMITTAL
30% SUBMITTAL

REGISTERED PROFESSIONAL ENGINEER
BRIAN L. BUTLER
No. E 16569
ELECTRICAL
STATE OF CALIFORNIA

BLACK & VEATCH

JOINT VENTURE

FILANC

BLACK & VEATCH

CITY OF MORRO BAY
MORRO BAY WATER
RECLAMATION FACILITY (WRF)

TREATMENT AREA - RO FEED TANKS
P&ID
RO FEED TANKS

DESIGNED: BLB, KEZ
DETAILED: PVR
CHECKED: TAH
APPROVED:
DATE:

0 1/2 1
IF THIS BAR DOES NOT MEASURE 1" THEN DRAWING IS NOT TO FULL SCALE

PROJECT NO.
400530

33-I-001
SHEET
OF

PLOTTED: 3/17/2020 5:01:23 PM
D400530

PCS HMI

IN REMOTE	RUNNING	FAIL	RUN CMD	SPEED SETPT	SPEED FEEDBACK	HI PRESSURE
YI 0201	YIR 0201	UA 0201	UCR 0201	SC 0201	SI 0201	PAH 0201
YI 0101	YIR 0101	UA 0101	UCR 0101	SC 0101	SI 0101	PAH 0101
YI 0301	YIR 0301	UA 0301	UCR 0301	SC 0301	SI 0301	PAH 0301

BACKUP EMERGENCY POWER	pH	FAIL	FLOW	PRESSURE
UCA 0001	AI 0001	YA 0001	FI 0001	PI 0001

31-CTRL-RIO-0001

480V

34-PRW-LCP-0001
(WITH LOCAL STARTER/DRIVE)

TESTING TAP
PRW-V-0102
3"-PRW-PVC-02
2"-PRW-DIP
PRW-V-0101
PLANT RECYCLED WATER PUMP PRW-P-0101
2"-PRW-DIP
4"-PRW-DIP
PSH 0102
PG 0102
PRW-V-0104
PRW-V-0108
PRW-V-0107
PRW-V-0105
PRW-V-0106
PRW-V-0103
D

4"-PRW-PVC-02

PG 0001
PRW-V-0005
AIR BLADDER STORAGE TANK PRW-T-0001
PRW-V-0001
PIT 0001
PRW-V-0004
AIT 0001 pH
AE 0001 pH
24V
FIT 0001
FE 0001
PRW-V-0006
PRW-V-0003
M
3"
A/G
B/G
4"-PRW-DIP
4"-PRW-PVC-02

GA 33-I-001
FROM RO FEED TANKS
4"-PRW-PVC-02
NACL-V-0003
NACL-V-0002
NACL-V-0001
2"-NACL-CPVC-02
1"-NACL-CPVC-02
1/2"-NACL-TEFL-01
UH 90-I-002
FROM SODIUM HYPOCHLORITE

TESTING TAP
PRW-V-0202
3"-PRW-PVC-02
2"-PRW-DIP
PRW-V-0201
PLANT RECYCLED WATER PUMP PRW-P-0201
2"-PRW-DIP
4"-PRW-DIP
PSH 0202
PG 0202
PRW-V-0204
PRW-V-0208
PRW-V-0207
PRW-V-0205
PRW-V-0206
PRW-V-0203
D

TESTING TAP
PRW-V-0302
3"-PRW-PVC-02
2"-PRW-DIP
PRW-V-0301
PLANT RECYCLED WATER PUMP PRW-P-0301
2"-PRW-DIP
4"-PRW-DIP
PSH 0302
PG 0302
PRW-V-0304
PRW-V-0308
PRW-V-0307
PRW-V-0305
PRW-V-0306
PRW-V-0303
D

PACKAGED SYSTEM *

2"-PRW-PVC-02 HB 22-I-001 TO HEADWORKS - FINE SCREEN
2"-PRW-PVC-02 HC 23-I-001 TO ODOR CONTROL
3"-PRW-PVC-02 HD 31-I-001 TO BNR
2"-PRW-PVC-02 HE 32-I-001 TO MBR
2"-PRW-PVC-02 HF 62-I-001 TO PRODUCT WATER SYSTEM
2"-PRW-PVC-02 HG 71-I-001 TO SLUDGE HOLDING TANKS
2"-PRW-PVC-02 HH 72-I-001 TO DEWATERING FACILITY
2"-PRW-PVC-02 HK 72-I-002 TO BELT FILTER PRESS WASHWATER PUMP
2"-PRW-PVC-02 HI 73-I-001 TO SAFE FILTER FACILITY
2"-PRW-PVC-02 HJ 90-I-001 TO CHEMICAL FACILITY
2"-PRW-PVC-02 HA 21-I-001 TO HEADWORKS
2"-PRW-PVC-02 TO VACTOR WASHDOWN HOSE BIBB
TO SITE IRRIGATION

NOTES:

1. SEE LEGEND AND ABBREVIATIONS ON DRAWING 00-I-001, 00-I-002 AND 00-I-003.
2. AREA CODE IS 34 UNLESS OTHERWISE NOTED. SYSTEM CODE IS PRW UNLESS OTHERWISE NOTED.
3. LOCAL CONTROL DEVICES SUCH AS INDICATING LIGHTS AND SWITCHES, LOCATED IN MCC's OR AT DRIVEN EQUIPMENT MAY NOT INDICATED ON THIS P&ID.
4. PUMPS AND TANKS TO BE PROVIDED AS A SINGLE PACKAGED SYSTEM.

90% SUBMITTAL - NOT FOR CONSTRUCTION

NO.	BY	CHK	APP
B	BLB	TAH	EVB
A	BLB	TAH	EVB

REVISIONS AND RECORD OF USE

DATE	
7/30/2019	60% SUBMITTAL
3/5/2019	30% SUBMITTAL

REGISTERED PROFESSIONAL ENGINEER
BRIAN L. BUTLER
No. E 16569
ELECTRICAL
STATE OF CALIFORNIA

BLACK & VEATCH
JOINT VENTURE
BLACK & VEATCH
FILANC

CITY OF MORRO BAY
MORRO BAY WATER
RECLAMATION FACILITY (WRF)
TREATMENT AREA - PLANT RECYCLED WATER PUMP STATION
P&ID
PLANT RECYCLED WATER PUMPS

DESIGNED: BLB, KEZ
DETAILED: PVR
CHECKED: TAH
APPROVED:
DATE:

0 1/2 1
IF THIS BAR DOES NOT MEASURE 1" THEN DRAWING IS NOT TO FULL SCALE

PROJECT NO.
400530

34-I-001
SHEET
OF

PLOTTED: 3/17/2020 5:01:28 PM
D400530

PCS HMI

51-CTRL-RIO-0001

FLOW LOW FAL 0001 | COND FAULT FA 0001 | COND AI 0001 | TURB FAULT FA 0002 | TURB AI 0002 | ORP FAULT FA 0003 | ORP AI 0003 | CL2 FAULT FA 0004 | FREE CL2 AI 0004 | NH3 FAULT FA 0005 | NH3 AI 0005 | pH FAULT FA 0006 | pH AI 0006 | TEMP AI 0006

AIT 0001 COND → AE 0001 COND → RO-V-0003 → FSL 0001 / FI 0001

AIT 0002 TURB → AE 0002 TURB → RO-V-0004 → FI 0002

AIT 0003 ORP → AE 0003 ORP → RO-V-0005 → FI 0003

AIT 0004 FREE CL2 (NOTE 5) → AE 0004 FREE CL2 → RO-V-0006 → FI 0004

AIT 0005 MONOCHLORIMINE/ AMMONIA → AE 0005 MONO-CHLORIMINE / AMMONIA → RO-V-0007 → FI 0005

AIT 0006 pH → AE 0006 pH → RO-V-0008 → FI 0006

120V

RO-V-0009 → Y_D

RO-V-00013

RO-V-0002

RO FEED ANALYZER PANEL

FLOW FI 0001 | RUNNING YIR 0001 | FAIL UA 0001 | RUN CMD UCR 0001

LCP WITH LOCAL STARTER — 120V

FURNISHED BY SAMPLE PUMP SUPPLIER.

SAMPLE PUMP RO-P-0001

RO-V-0001

RO-V-0011

RO-V-0010

24V — FIT 0001 — FE 0001

B/G A/G

GB 33-I-001 RO FEED TANKS

18"-MFF-HDPE

18"-MFF-PVC-02

12"-ROF-PVC-02

HSO4-V-0003

HSO4-V-0002

HSO4-V-0001

1"-SA-CPVC-02

2"-SA-CPVC-02

1/2"-SA-TEFL-01

UP 90-I-007 SULFURIC ACID

STATIC MIXER RO-MXS-0001

10"-ROF-PVC-02

M 10"

12"-ROF-PVC-02

STATIC MIXER RO-MXS-0002

12"-ROF-PVC-02

ANTI-V-0003

ANTI-V-0002

ANTI-V-0001

UM 90-I-005 ANTISCALANT

1/2"-ANTI-PE-06

1"-ANTI-CPVC-02

2"-ANTI-CPVC-02

IN REMOTE YI 0012 | OPENED ZIO 0012 | CLOSED ZIC 0012 | OPEN CMD ZCO 0012 | CLOSE CMD ZCC 0012

HS 0012 LOR | HS 0012 OSC | ZLC 0012 | ZLO 0012 | ZSC 0012 | ZSO 0012 — 480V

VALVE ACTUATOR

M

8"-ROF-PVC-02

RO-V-0012

IA 64-I-001 RO TO OCEAN OUTFALL TANK

6"-ROF-PVC-02

IB 51-I-002 RO FEED PUMP 1

6"-ROF-PVC-02

IC 51-I-002 RO FEED PUMP 2

6"-ROF-PVC-02

ID 51-I-002 RO FEED PUMP 3

NOTES:

1. SEE LEGEND AND ABBREVIATIONS ON DRAWINGS 00-I-001, 00-1-002 AND 00-1-003
2. AREA CODE IS 51 UNLESS OTHERWISE NOTED. SYSTEM CODE IS RO UNLESS OTHERWISE NOTED.
3. LOCAL CONTROL DEVICES SUCH AS INDICATING LIGHTS AND SWITCHES, LOCATED ON MCCs OR AT DRIVEN EQUIPMENT, MAY NOT BE SHOWN ON THIS P&ID.
4. ALL INSTRUMENTS SHOWN AS PANEL MOUNTED ON THIS DRAWINGS ARE LOCATED ON THE RO FEEDWATER INSTRUMENT PANEL MOUNTED ON THIS DRAWING ARE LOCATED ON THE RO FEEDWATER INSTRUMENT PANEL, SHOWN ON DWG. 00-I-505.
5. INSTRUMENT TO BE TITRATING TYPE NOT PROBE TYPE.

90% SUBMITTAL - NOT FOR CONSTRUCTION

NO.	BY	CHK	APP'D	DATE
B	BLB	TAH	EVB	7/30/2019
A	BLB	TAH	EVB	3/5/2019

REVISIONS AND RECORD OF USE

60% SUBMITTAL
30% SUBMITTAL

REGISTERED PROFESSIONAL ENGINEER — BRIAN L. BUTLER — No. E 16569 — ELECTRICAL — STATE OF CALIFORNIA

BLACK & VEATCH

JOINT VENTURE

BLACK & VEATCH

FILANC

CITY OF MORRO BAY
MORRO BAY WATER
RECLAMATION FACILITY (WRF)

RO/UV BUILDING - RO SYSTEM
P&ID
RO FEED CONDITIONING SYSTEM

DESIGNED: BLB, KEZ
DETAILED: PVR
CHECKED: TAH
APPROVED:
DATE:

0 1/2 1

IF THIS BAR DOES NOT MEASURE 1" THEN DRAWING IS NOT TO FULL SCALE

PROJECT NO.
400530

51-I-001

SHEET
OF XXX

PLOTTED: 3/17/2020 5:04:57 PM

D400530

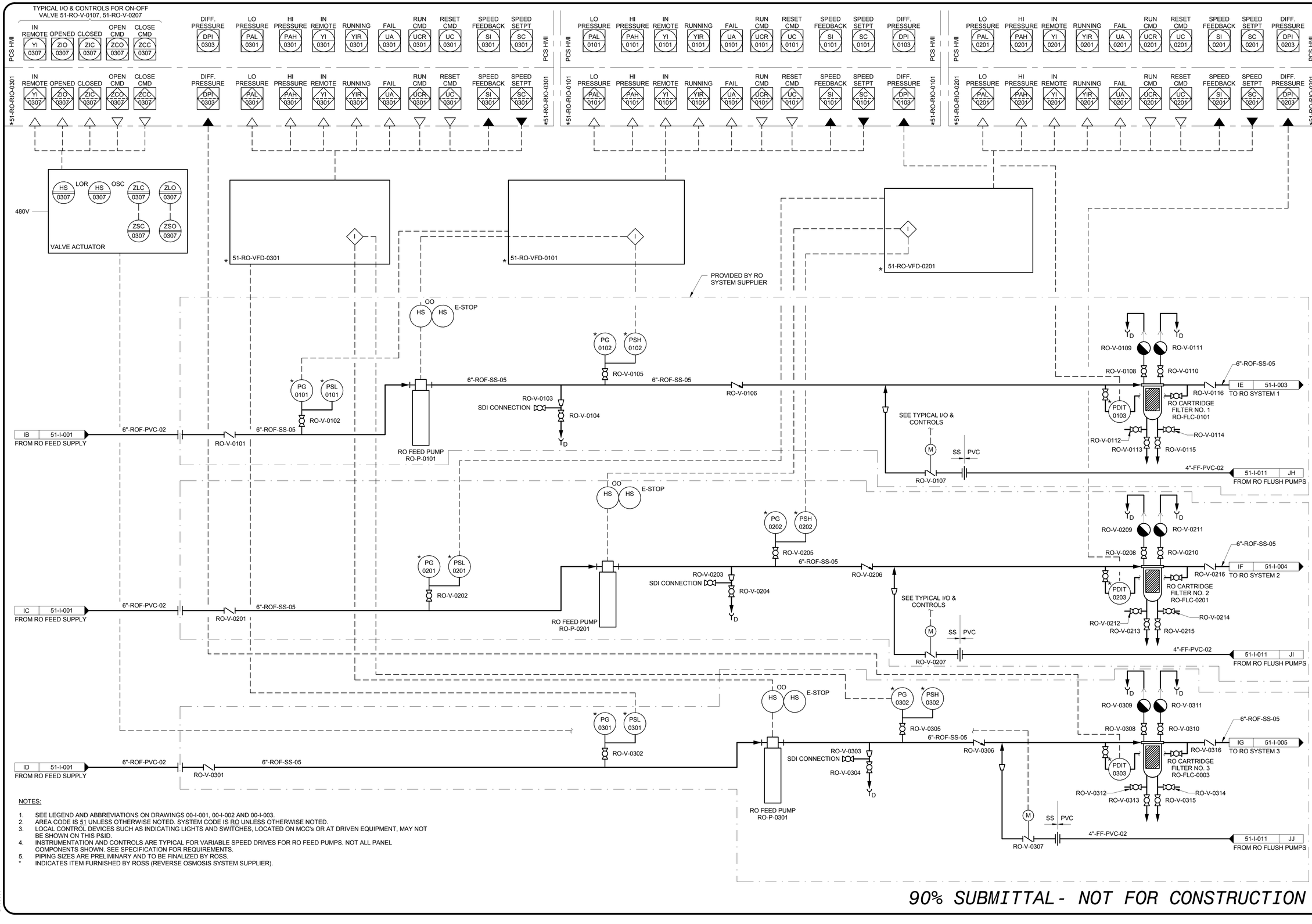

NOTES:

1. SEE LEGEND AND ABBREVIATIONS ON DRAWINGS 00-I-001, 00-I-002 AND 00-I-003.
2. AREA CODE IS 51 UNLESS OTHERWISE NOTED. SYSTEM CODE IS RO UNLESS OTHERWISE NOTED.
3. LOCAL CONTROL DEVICES SUCH AS INDICATING LIGHTS AND SWITCHES, LOCATED ON MCC's OR AT DRIVEN EQUIPMENT, MAY NOT BE SHOWN ON THIS P&ID.
4. INSTRUMENTATION AND CONTROLS ARE TYPICAL FOR VARIABLE SPEED DRIVES FOR RO FEED PUMPS. NOT ALL PANEL COMPONENTS SHOWN. SEE SPECIFICATION FOR REQUIREMENTS.
5. PIPING SIZES ARE PRELIMINARY AND TO BE FINALIZED BY ROSS.

* INDICATES ITEM FURNISHED BY ROSS (REVERSE OSMOSIS SYSTEM SUPPLIER).

90% SUBMITTAL - NOT FOR CONSTRUCTION

NO.	BY	CHK	APP	DATE	REVISIONS AND RECORD OF USE
B	BLB	TAH	EVB	7/30/2019	60% SUBMITTAL
A	BLB	TAH	EVB	3/5/2019	30% SUBMITTAL

REGISTERED PROFESSIONAL ENGINEER
BRIAN L. BUTLER
No. E 16569
ELECTRICAL
STATE OF CALIFORNIA

BLACK & VEATCH
JOINT VENTURE
BLACK & VEATCH
FILANC

CITY OF MORRO BAY
MORRO BAY WATER RECLAMATION FACILITY (WRF)

RO/UV BUILDING - RO SYSTEM
P&ID
RO CARTRIDGE FILTERS

DESIGNED: BLB, ADV
DETAILED: PVR
CHECKED: TAH
APPROVED:
DATE:

0 1/2 1
IF THIS BAR DOES NOT MEASURE 1" THEN DRAWING IS NOT TO FULL SCALE

PROJECT NO. 400530

51-I-002
SHEET OF XXX

PLOTTED: 3/17/2020 5:05:50 PM
D400530

PCS HMI

*51-RO-RIO-0101

IN REMOTE YI 1001 | OPENED ZIO 1001 | CLOSED ZIC 1001 | OPEN CMD ZCO 1001 | CLOSE CMD ZCC 1001

PRESSURE PI 1001 | PRESSURE PI 1003

PRESSURE PI 1004 | PRESSURE PI 1002 | PRESSURE PI 1005 | COND AI 1001 | FAIL YA 1001

FLOW FI 1001 | COND AI 1002 | FAIL UA 1002

IN REMOTE YI 1001 | RUNNING YIR 1001 | FAIL YA 1001 | RUN CMD UCR 1001 | RESET CMD UC 1001 | SPEED FEEDBACK SI 1001 | SPEED SETPT SC 1001

HS 1001 LOR | HS 1001 OSC | ZLC 1001 | ZLO 1001 | ZSC 1001 | ZSO 1001

480V

VALVE ACTUATOR

VESSEL PERMEATE SAMPLE , TYP (NOTE 5)

FEED SAMPLE

RO-V-1005

RO-V-1008

STAGE 1 REJECT SAMPLE BIB (NOTE 5)

5-WAY VALVE

PG 1001

RO-V-1023

VESSEL PERMEATE SAMPLE BIB, TYP (NOTE 5)

STAGE 2 REJECT SAMPLE BIB (NOTE 5)

RO TRAIN INSTRUMENT AND SAMPLE PANEL

RO-V-1014

RO-V-1024

NOTE 6

INTEGRAL SAMPLE DRAIN TROUGH TO FLOOR DRAIN

* 51-RO-VFD-1001

PROVIDED BY RO SYSTEM SUPPLIER

PIT 1001

RO-V-1004

AIT 1001 COND 24V

AE 1001 COND

PIT 1002

RUPTURE DISC

RO-RD-1001

4"-ROP-CPVC-02

RO-V-1010

RO-V-1011

RO-V-1012

RO-V-1003

REVERSE OSMOSIS MEMBRANE STAGE 1 RO

RO-V-1009

RO-V-1013

II 51-I-006

TO RO TRAIN 1 PERMEATE SYSTEM

IE 51-I-002

RO FEED PUMP 1

6"-ROF-SS-05

6"-ROF-SS-05

RO-V-1001

RO-V-1002

SS CPVC

AIT 1002 COND 24V

FIT 1001 24V

AE 1002 COND

FE 1001

RO-V-1030

M

2 1/2"

PIT 1004

RO-V-1020

4"-ROF-SS-05

2 1/2"-ROP-CPVC-02

REVERSE OSMOSIS MEMBRANE STAGE 2 RO

RO-V-1022

RO-V-1029

6"-ROC-SS-05

PIT 1003

RO-V-1016

PIT 1005

RO-V-1026

RO-V-1027

2 1/2"-ROC-SS-12

NOTE 10

RO-V-1028

2 1/2"-ROC-SS-12

IJ 51-I-006

TO RO TRAIN 1 CONCENTRATE SYSTEM

RO-V-1017

RO-V-1021

RO-V-1025

RO-V-1015

SS CPVC

SS CPVC

SS CPVC

6"-CIPS-CPVC-02

6"-CIPR-CPVC-02

4"-ROC-SS-05

4"-ROC-SS-05

RO-V-1019

RO-V-1018

PG 1004

4"-ROC-SS-05

BOOSTER PUMP RO-P-1001

JE 51-I-010

FROM CIP PUMPS

6"-CIPS-CPVC-02

CIP SOLUTION SUPPLY

4"-CIPS-CPVC-02

IK 51-I-004

RO CLEANING RETURN FROM TRAIN 2

6"-CIPR-CPVC-02

IN 51-I-005

RO CLEANING RETURN FROM TRAIN 3

6"-CIPR-CPVC-02

51-I-010 IH

RO CLEANING RETURN

6"-CIPR-CPVC-02

CIP SOLUTION RETURN

4"-CIPR-CPVC-02

NOTES:

1. SEE LEGEND AND ABBREVIATIONS ON DRAWINGS 00-I-001, 00-I-00 AND 00-I-003.
2. AREA CODE IS 51 UNLESS OTHERWISE NOTED. SYSTEM CODE IS RO UNLESS OTHERWISE NOTED.
3. LOCAL CONTROL DEVICES SUCH AS INDICATING LIGHTS AND SWITCHES, LOCATED ON MCCs OR AT DRIVEN EQUIPMENT, MAY NOT BE SHOWN ON THIS P&ID.
4. TAG NUMBER FOR RO TRAINS 2,3, AND 4 SHALL FOLLOW THE SAME TAGGING SCHEME FOR RO TRAIN 1. FOR EXAMPLE CIP INTERCONNECT VALVE VBF-2314 SHALL BE TAGGED VBF-2324 FOR TRAIN 2, VBF-2334 FOR TRAIN 3, AND VBF-2344 FOR TRAIN 4.
5. ONE SAMPLE VALVE PER VESSEL.
6. ALL INSTRUMENTS (INCLUDING VALVE INDICATORS AND CONTROLS) SHOWN AS PANEL MOUNTED ON THIS DRAWING ARE LOCATED ON THE RO TRAIN INSTRUMENT CONTROL PANEL.
7. NOT ALL CIP VALVES AND PIPING ARE INDICATED ON THE DRAWING.
8. RO SKID TO BE EQUIPPED WITH VALVES AT LOW POINTS TO PROVIDE ADAQUATE DRAINING.
9. PIPING SIZES ARE PRELIMINARY AND TO BE FINALIZED BY ROSS.
10. HIGH PRESSURE SECOND STAGE CONCENTRATE PIPING TO BE DUPLEX STAINLESS STEEL, REFER TO SPECIFICATIONS.

90% SUBMITTAL- NOT FOR CONSTRUCTION

NO.	BY	CHK	APP	DATE	REVISIONS AND RECORD OF USE
B	BLB	TAH	EVB	7/30/2019	60% SUBMITTAL
A	BLB	TAH	EVB	3/5/2019	30% SUBMITTAL

REGISTERED PROFESSIONAL ENGINEER BRIAN L. BUTLER No. E 16569 ELECTRICAL STATE OF CALIFORNIA

BLACK & VEATCH

JOINT VENTURE

BLACK & VEATCH

FILANC

CITY OF MORRO BAY
MORRO BAY WATER
RECLAMATION FACILITY (WRF)

RO/UV BUILDING - RO SYSTEM
P&ID
RO UNIT 1

DESIGNED: BLB, ADV
DETAILED: PVR
CHECKED: TAH
APPROVED:
DATE:

0 1/2 1

IF THIS BAR DOES NOT MEASURE 1" THEN DRAWING IS NOT TO FULL SCALE

PROJECT NO. 400530

51-I-003

SHEET OF XXX

PLOTTED: 3/17/2020 5:05:02 PM

D400530

PCS HMI

*51-RO-RIO-0201

IN REMOTE YI 2001 | OPENED ZIO 2001 | CLOSED ZIC 2001 | OPEN CMD ZCO 2001 | CLOSE CMD ZCC 2001

PRESSURE PI 2001 | PRESSURE PI 2003

PRESSURE PI 2004 | PRESSURE PI 2002 | PRESSURE PI 2005 | COND AI 2001 | FAIL YA 2001

FLOW FI 2001 | COND AI 2002 | FAIL YA 2002

IN REMOTE YI 2001 | RUNNING YIR 2001 | FAIL YA 2001 | RUN CMD UCR 2001 | RESET CMD UC 2001 | SPEED FEEDBACK SI 2001 | SPEED SETPT SC 2001

NOTE 6

VALVE ACTUATOR: HS 2001 LOR, HS 2001 OSC, ZLC 2001, ZLO 2001, ZSC 2001, ZSO 2001 — 480V

VESSEL PERMEATE SAMPLE, TYP (NOTE 5)

FEED SAMPLE — RO-V-2005

RO-V-2008

STAGE 1 REJECT SAMPLE BIB (NOTE 5)

5-WAY VALVE — * PG 2001

RO-V-2023

VESSEL PERMEATE SAMPLE BIB, TYP (NOTE 5)

STAGE 2 REJECT SAMPLE BIB (NOTE 5)

RO TRAIN INSTRUMENT AND SAMPLE PANEL

RO-V-2014

RO-V-2024

INTEGRAL SAMPLE DRAIN TROUGH TO FLOOR DRAIN

* 51-RO-VFD-2001

* PIT 2001

RO-V-2004

* AIT 2001 — COND — 24V

* PIT 2002

* AE 2001 — COND

Y_D

RUPTURE DISC

RO-RD-2001

PROVIDED BY RO SYSTEM SUPPLIER

4"-ROP-CPVC-02

IL | 51-I-007 — TO RO TRAIN 2 PERMEATE SYSTEM

RO-V-2003

REVERSE OSMOSIS MEMBRANE STAGE 1 RO

RO-V-2010 | RO-V-2011 | RO-V-2012

RO-V-2009

RO-V-2012

RO-V-2013

IF | 51-I-002 — RO FEED PUMP 2

6"-ROF-SS-05

M — RO-V-2001

6"-ROF-SS-05

RO-V-2002

SS — CPVC

* PIT 2004

RO-V-2020

* AIT 2002 — COND — 24V

* FIT 2001 — 24V

* AE 2002 — COND

Y_D

FE 2001

M — 2 1/2"

RO-V-2030

4"-ROF-SS-05

RO-V-2022

REVERSE OSMOSIS MEMBRANE STAGE 2 RO

2 1/2"-ROP-CPVC-02

RO-V-2029

6"-ROC-SS-05

* PIT 2003

RO-V-2016

* PIT 2005

RO-V-2026

RO-V-2027

2 1/2"-ROC-SS-12

NOTE 10

RO-V-2028

IM | 51-I-007 — TO RO TRAIN 2 CONCENTRATE SYSTEM

6"-CIPS-CPVC-02

RO-V-2017

RO-V-2021 | RO-V-2025

SS — CPVC — SS — CPVC

RO-V-2015

SS — CPVC

6"-CIPR-CPVC-02

4"-ROC-SS-05

4"-ROC-SS-05

RO-V-2019

RO-V-2018

* PG 2004

JF | 51-I-010 — FROM CIP PUMPS

6"-CIPS-CPVC-02 — CIP SOLUTION SUPPLY — 4"-CIPS-CPVC-02

4"-ROC-SS-05

BOOSTER PUMP RO-P-2001

51-I-003 | IK — RO CLEANING SOLUTION RETURN

6"-CIPR-CPVC-02 — CIP SOLUTION RETURN — 4"-CIPR-CPVC-02

NOTES:

1. SEE LEGEND AND ABBREVIATIONS ON DRAWINGS 00-I-001, 00-I-00 AND 00-I-003.
2. AREA CODE IS 51 UNLESS OTHERWISE NOTED. SYSTEM CODE IS RO UNLESS OTHERWISE NOTED.
3. LOCAL CONTROL DEVICES SUCH AS INDICATING LIGHTS AND SWITCHES, LOCATED ON MCCs OR AT DRIVEN EQUIPMENT, MAY NOT BE SHOWN ON THIS P&ID.
4. TAG NUMBER FOR RO TRAINS 2,3, AND 4 SHALL FOLLOW THE SAME TAGGING SCHEME FOR RO TRAIN 1. FOR EXAMPLE CIP INTERCONNECT VALVE VBF-2314 SHALL BE TAGGED VBF-2324 FOR TRAIN 2, VBF-2334 FOR TRAIN 3, AND VBF-2344 FOR TRAIN 4.
5. ONE SAMPLE VALVE PER VESSEL.
6. ALL INSTRUMENTS (INCLUDING VALVE INDICATORS AND CONTROLS) SHOWN AS PANEL MOUNTED ON THIS DRAWING ARE LOCATED ON THE RO TRAIN INSTRUMENT CONTROL PANEL.
7. NOT ALL CIP VALVES AND PIPING ARE INDICATED ON THE DRAWING.
8. RO SKID TO BE EQUIPPED WITH VALVES AT LOW POINTS TO PROVIDE ADAQUATE DRAINING.
9. PIPING SIZES ARE PRELIMINARY AND TO BE FINALIZED BY ROSS.
10. HIGH PRESSURE SECOND STAGE CONCENTRATE PIPING TO BE DUPLEX STAINLESS STEEL, REFER TO SPECIFICATIONS.

* PROVIDED BY RO SYSTEM SUPPLIER

90% SUBMITTAL - NOT FOR CONSTRUCTION

NO.	BY	CHK	APP	DATE	REVISIONS AND RECORD OF USE
B	BLB	TAH	EVB	7/30/2019	60% SUBMITTAL
A	BLB	TAH	EVB	3/5/2019	30% SUBMITTAL

REGISTERED PROFESSIONAL ENGINEER — BRIAN L. BUTLER — No. E 16569 — ELECTRICAL — STATE OF CALIFORNIA

BLACK & VEATCH JOINT VENTURE — BLACK & VEATCH — FILANC

CITY OF MORRO BAY
MORRO BAY WATER RECLAMATION FACILITY (WRF)

RO/UV BUILDING - RO SYSTEM
P&ID
RO UNIT 2

DESIGNED:	BLB, ADV
DETAILED:	PVR
CHECKED:	TAH
APPROVED:	
DATE:	

0 1/2 1

IF THIS BAR DOES NOT MEASURE 1" THEN DRAWING IS NOT TO FULL SCALE

PROJECT NO. 400530

51-I-004

SHEET OF XXX

PLOTTED: 3/17/2020 5:05:07 PM

D400530

PCS HMI

*51-RO-RIO-0301

IN REMOTE YI 3001 | OPENED ZIO 3001 | CLOSED ZIC 3001 | OPEN CMD ZCO 3001 | CLOSE CMD ZCC 3001

PRESSURE PI 3001 | PRESSURE PI 3003

PRESSURE PI 3004 | PRESSURE PI 3002 | PRESSURE PI 3005 | COND AI 3001 | FAIL YA 3001

FLOW FI 3001 | COND AI 3002 | FAIL YA 3002

IN REMOTE YI 3001 | RUNNING YIR 3001 | FAIL YA 3001 | RUN CMD UCR 3001 | RESET CMD UC 3001 | SPEED FEEDBACK SI 3001 | SPEED SETPT SC 3001

NOTE 6

VESSEL PERMEATE SAMPLE, TYP (NOTE 5)

FEED SAMPLE RO-V-3005

RO-V-3008

STAGE 1 REJECT SAMPLE BIB (NOTE 5)

5-WAY VALVE

PG 3001

RO-V-3023

VESSEL PERMEATE SAMPLE BIB, TYP (NOTE 5)

STAGE 2 REJECT SAMPLE BIB (NOTE 5)

RO TRAIN INSTRUMENT AND SAMPLE PANEL

RO-V-3014

RO-V-3024

HS 3001 LOR HS 3001 OSC ZLC 3001 ZLO 3001 ZSC 3001 ZSO 3001

480V

VALVE ACTUATOR

PIT 3001

RO-V-3004

INTEGRAL SAMPLE DRAIN TROUGH TO FLOOR DRAIN

AIT 3001 COND 24V

AE 3001 COND

Y_D

51-RO-VFD-3001

PIT 3002

RO-V-3010

RO-V-3011

RO-V-3012

RUPTURE DISC

RO-RD-3001

PROVIDED BY RO SYSTEM SUPPLIER

4"-ROP-CPVC-02

IO 51-I-008

TO RO TRAIN 3 PERMEATE SYSTEM

RO-V-3003

REVERSE OSMOSIS MEMBRANE STAGE 1 RO

RO-V-3009

RO-V-3013

IG 51-I-002

RO FEED PUMP 3

6"-ROF-SS-05

6"-ROF-SS-05

M

RO-V-3001

RO-V-3012

AIT 3002 COND 24V

FIT 3001

FE 3001

M

2 1/2"

AE 3002 COND

Y_D

RO-V-3030

RO-V-3002

SS CPVC

PIT 3004

RO-V-3020

4"-ROF-SS-05

REVERSE OSMOSIS MEMBRANE STAGE 2 RO

2 1/2"-ROP-CPVC-02

RO-V-3022

RO-V-3029

6"-ROC-SS-05

6"-CIPS-PVC-02

PIT 3003

RO-V-3016

PIT 3005

RO-V-3026

RO-V-3027

2 1/2"-ROC-SS-12

NOTE 10

RO-V-3028

2 1/2"-ROC-SS-12

IP 51-I-008

TO RO TRAIN 3 CONCENTRATE SYSTEM

RO-V-3017

RO-V-3015

RO-V-3021

RO-V-3025

SS CPVC

SS CPVC

SS CPVC

4"-ROC-SS-05

6"-CIPR-CPVC-02

4"-ROC-SS-05

RO-V-3019

RO-V-3018

PG 3004

JG 51-I-010

FROM CIP PUMPS

6"-CIPS-CPVC-02

CIP SOLUTION SUPPLY

4"-CIPS-CPVC-02

4"-ROC-SS-05

BOOSTER PUMP RO-P-3001

51-I-003 IN

RO CLEANING SOLUTION RETURN

6"-CIPR-CPVC-02

CIP SOLUTION RETURN

4"-CIPR-CPVC-02

NOTES:

1. SEE LEGEND AND ABBREVIATIONS ON DRAWINGS 00-I-001, 00-I-00 AND 00-I-003.
2. AREA CODE IS 51 UNLESS OTHERWISE NOTED. SYSTEM CODE IS RO UNLESS OTHERWISE NOTED.
3. LOCAL CONTROL DEVICES SUCH AS INDICATING LIGHTS AND SWITCHES, LOCATED ON MCCs OR AT DRIVEN EQUIPMENT, MAY NOT BE SHOWN ON THIS P&ID.
4. TAG NUMBER FOR RO TRAINS 2,3, AND 4 SHALL FOLLOW THE SAME TAGGING SCHEME FOR RO TRAIN 1. FOR EXAMPLE CIP INTERCONNECT VALVE VBF-2314 SHALL BE TAGGED VBF-2324 FOR TRAIN 2, VBF-2334 FOR TRAIN 3, AND VBF-2344 FOR TRAIN 4.
5. ONE SAMPLE VALVE PER VESSEL.
6. ALL INSTRUMENTS (INCLUDING VALVE INDICATORS AND CONTROLS) SHOWN AS PANEL MOUNTED ON THIS DRAWING ARE LOCATED ON THE RO TRAIN INSTRUMENT CONTROL PANEL.
7. NOT ALL CIP VALVES AND PIPING ARE INDICATED ON THE DRAWING.
8. RO SKID TO BE EQUIPPED WITH VALVES AT LOW POINTS TO PROVIDE ADAQUATE DRAINING.
9. PIPING SIZES ARE PRELIMINARY AND TO BE FINALIZED BY ROSS.
10. HIGH PRESSURE SECOND STAGE CONCENTRATE PIPING TO BE DUPLEX STAINLESS STEEL, REFER TO SPECIFICATIONS.

* PROVIDED BY RO SYSTEM SUPPLIER

90% SUBMITTAL - NOT FOR CONSTRUCTION

NO.	BY	CHK	APP	DATE	REVISIONS AND RECORD OF USE
B	BLB	TAH	EVB	7/30/2019	60% SUBMITTAL
A	BLB	TAH	EVB	3/5/2019	30% SUBMITTAL

REGISTERED PROFESSIONAL ENGINEER BRIAN L. BUTLER No. E 16569 ELECTRICAL STATE OF CALIFORNIA

BLACK & VEATCH

JOINT VENTURE

BLACK & VEATCH

FILANC

CITY OF MORRO BAY
MORRO BAY WATER
RECLAMATION FACILITY (WRF)

RO/UV BUILDING - RO SYSTEM
P&ID
RO UNIT 3

DESIGNED: BLB, ADV
DETAILED: PVR
CHECKED: TAH
APPROVED:
DATE:

0 1/2 1

IF THIS BAR DOES NOT MEASURE 1" THEN DRAWING IS NOT TO FULL SCALE

PROJECT NO. 400530

51-I-005

SHEET OF XXX

PLOTTED: 3/17/2020 5:05:12 PM

D400530

PCS HMI | *51-RO-RIO-0101

PRESSURE PI 1007 | HI PRESSURE PAH 1006 | PRESSURE PI 1006 | FLOW FI 1003 | IN REMOTE YI 1048 | OPENED ZIO 1048 | CLOSED ZIC 1048 | OPEN CMD ZCO 1048 | CLOSE CMD ZCC 1048 | FLOW FI 1002 | IN REMOTE YI 1047 | POSITION FEEDBACK ZI 1047 | POSITION SETPT ZC 1047 | OPENED ZIO 1047 | CLOSED ZIC 1047 | COND AI 1003 | FAIL YA 1003 | FAIL YA 1004 | COND AI 1004 | IN REMOTE YI 1040 | OPENED ZIO 1040 | CLOSED ZIC 1040 | OPEN CMD ZCO 1040 | CLOSE CMD ZCC 1040 | IN REMOTE YI 1042 | OPENED ZIO 1042 | CLOSED ZIC 1042 | OPEN CMD ZCO 1042 | CLOSE CMD ZCC 1042 | PRESSURE PI 1008

MOUNT ON RO TRAIN INSTRUMENT AND SAMPLE PANEL

PG 1006 | PSH 1006 | PIT 1006 | RO-V-1033 | RO-V-1034 | RO-V-1031 | RO-V-1032 | 4"-ROP-CPVC-02

II | 51-I-003
FROM RO PERMEATE UNIT 1 VESSELS

FIT 1002 | FE 1002 | M | 4" | 24V

4"-ROP-CPVC-02

AIT 1003 | COND | 24V
AE 1003 | COND
Y_D

RO-V-1036 | SAMPLE LINE
RO-V-1035 | TO TRAIN SAMPLE/ANALYZER PANEL

CPVC-02 | PVC-02

RO-V-1054 | NOTE 5 | Y_D | 2"-ROP-PVC-02

480V
HS 1040 | LOR | HS 1040 | OSC | ZLC 1040 | ZLO 1040 | ZSC 1040 | ZSO 1040
VALVE ACTUATOR

480V
HS 1042 | LOR | HS 1042 | OSC | ZLC 1042 | ZLO 1042 | ZSC 1042 | ZSO 1042
VALVE ACTUATOR

RO-V-1039 | RO-V-1041 | RO-V-1042 | M

4"-ROP-PVC-02 | IQ | 52-I-001
TO UV SYSTEM

REMOVABLE SPOOLS (NOTE 7)

RO-V-1040 | M | 4"-ROP-PVC-02

8"-ROP-PVC-02 | IR | 64-I-001
TO OUTFALL BALANCING TANK

4"-ROP-PVC-02 | IV | 51-I-007
FROM TRAIN 2

4"-ROP-PVC-02 | IZ | 51-I-008
FROM TRAIN 3

480V
HS 1047 | LOR | HS 1047 | OSC | ZT 1047 | ZSO 1047 | ZSC 1047 | ZI 1047
VALVE ACTUATOR

4"-PCR-CPVC-02

RO-V-1037 | RO-V-1038

4"-PCR-CPVC-02 | IS | 51-I-009
RO TRAIN 1 CIP PERMEATE RETURN

4"-PCR-CPVC-02 | 51-I-007 | IW
RO TRAIN 2 CIP PERMEATE RETURN

4"-PCR-CPVC-02 | 51-I-008 | JA
RO TRAIN 3 CIP PERMEATE RETURN

480V
HS 1048 | LOR | HS 1048 | OSC | ZLC 1048 | ZLO 1048 | ZSC 1048 | ZSO 1048
VALVE ACTUATOR

AIT 1004 | COND | 24V
AE 1004 | COND
Y_D

RO-V-1050 | SAMPLE LINE
RO-V-1049 | TO TRAIN SAMPLE/ANALYZER PANEL

PIT 1008 | RO-V-1051

RO-V-1045 | RO-V-1046 | RO-V-1043 | 2 1/2"-ROC-SS-12 | RO-V-1044

PIT 1007 | PG 1007 | FIT 1003 | FE 1003 | 24V | M | 2 1/2"

IJ | 51-I-003
CONCENTRATE FROM RO UNIT 1 VESSELS

2 1/2"-ROC-SS-12 | NOTE 6

RO-V-1047

SS | PVC

2 1/2"-ROC-PVC-02

RO-V-1052 | RO-V-1053

4"-ROC-PVC-02 | IT | 65-I-001
TO OUTFALL SYSTEM

NACL-V-0006 | NACL-V-0005 | NACL-V-0001

2 1/2"-ROC-PVC-02 | IX | 51-I-007
FROM TRAIN 2

2 1/2"-ROC-PVC-02 | JB | 51-I-008
FROM TRAIN 3

2"-NACL-CPVC-02 | UB | 90-I-001
FROM SODIUM HYPOCHLORITE

1/2"-NACL-CPVC-02 | 1/2"-NACL-TEFL-01

M | 2 1/2"-ROC-SS-12 | NOTE 6 | RO-V-1048

PROVIDED BY RO SYSTEM SUPPLIER

NOTES:

1. SEE LEGEND AND ABBREVIATIONS ON DRAWINGS 00-I-001, 00-I-002 AND 00-I-003.
2. AREA CODE IS 51 UNLESS OTHERWISE NOTED. SYSTEM CODE IS RO UNLESS OTHERWISE NOTED.
3. LOCAL CONTROL DEVICES SUCH AS INDICATING LIGHTS AND SWITCHES, LOCATED ON MCCs OR AT DRIVEN EQUIPMENT, MAY NOT BE SHOWN ON THIS P&ID.
4. PIPING SIZES ARE PRELIMINARY AND TO BE FINALIZED BY ROSS.
5. CIP BLEED VALVE.
6. HIGH PRESSURE SECOND STAGE CONCENTRATE PIPING TO BE DUPLEX STAINLESS STEEL, REFER TO SPECIFICATIONS.
7. PROVIDE REMOVABLE SPOOLS, SWAPABLE FITTING, OR BLOCK AND BLEED VALVING TO PREVENT POTENTIAL CROSS-CONNECTION OF PERMATE AND CIP RETURN. FURNISH SUITABLE BLIND FLANGES TO REPLACE REMOVABLE SPOOL OR SWAPABLE FITTING AS REQUIRED.

* PROVIDED BY RO SYSTEM SUPPLIER

90% SUBMITTAL - NOT FOR CONSTRUCTION

NO.	BY	CHK	APP	DATE	REVISIONS AND RECORD OF USE
B	BLB	TAH	EVB	7/30/2019	60% SUBMITTAL
A	BLB	TAH	EVB	3/5/2019	30% SUBMITTAL

REGISTERED PROFESSIONAL ENGINEER
BRIAN L. BUTLER
No. E 16569
ELECTRICAL
STATE OF CALIFORNIA

BLACK & VEATCH | JOINT VENTURE | BLACK & VEATCH | FILANC

CITY OF MORRO BAY
MORRO BAY WATER RECLAMATION FACILITY (WRF)

RO/UV BUILDING - RO SYSTEM P&ID
RO PERMEATE/CONCENTRATE, UNIT 1

DESIGNED:	BLB, ADV
DETAILED:	PVR
CHECKED:	TAH
APPROVED:	
DATE:	

0 1/2 1
IF THIS BAR DOES NOT MEASURE 1" THEN DRAWING IS NOT TO FULL SCALE

PROJECT NO. 400530

51-I-006
SHEET
OF XXX

PLOTTED: 3/17/2020 5:05:18 PM
D400530

PCS HMI

*51-RO-RIO-0201

PRESSURE PI 2007 | HI PRESSURE PAH 2006 | PRESSURE PI 2006 | IN REMOTE YI 2048 | OPENED ZIO 2048 | CLOSED ZIC 2048 | OPEN CMD ZCO 2048 | CLOSE CMD ZCC 2048 | FLOW FI 2003 | FLOW FI 2002 | IN REMOTE YI 2047 | POSITION FEEDBACK ZI 2047 | POSITION SETPT ZC 2047 | OPENED ZIO 2047 | CLOSED ZIC 2047 | COND AI 2003 | FAIL YA 2003 | FAIL YA 2004 | COND AI 2004 | IN REMOTE YI 2040 | OPENED ZIO 2040 | CLOSED ZIC 2040 | OPEN CMD ZCO 2040 | CLOSE CMD ZCC 2040 | IN REMOTE YI 2042 | OPENED ZIO 2042 | CLOSED ZIC 2042 | OPEN CMD ZCO 2042 | CLOSE CMD ZCC 2042 | PRESSURE PI 2008

MOUNT ON RO TRAIN INSTRUMENT AND SAMPLE PANEL

PG 2006 | PSH 2006 | PIT 2006 | RO-V-2033 | RO-V-2034

4"-ROP-CPVC-02 | IL 51-I-004 | FROM RO PERMEATE UNIT 2 VESSELS

RO-V-2031 | RO-V-2032

4"-ROP-CPVC-02

FIT 2002 | 24V | FE 2002 | M | 4"

AIT 2003 | COND | 24V | AE 2003 | COND | D

RO-V-2036 | SAMPLE LINE

RO-V-2035 | TO TRAIN SAMPLE/ANALYZER PANEL

CPVC-02 | PVC-02

ROP-V-2054 | NOTE 5 | D | 2"-ROP-PVC-02

480V | HS 2040 | LOR | HS 2040 | OSC | ZLC 2040 | ZLO 2040 | ZSC 2040 | ZSO 2040 | VALVE ACTUATOR

480V | HS 2042 | LOR | HS 2042 | OSC | ZLC 2042 | ZLO 2042 | ZSC 2042 | ZSO 2042 | VALVE ACTUATOR | M

RO-V-2039 | RO-V-2041 | 4"-ROP-PVC-02 | RO-V-2042 | 4"-ROP-PVC-02 | IU 52-I-001 | TO UV SYSTEM

REMOVABLE SPOOLS (NOTE 7)

M | RO-V-2040 | 4"-ROP-PVC-02 | 4"-ROP-PVC-02 | IV 51-I-006 | TO OUTFALL PS

480V | HS 2047 | LOR | HS 2047 | OSC | ZT 2047 | ZSO 2047 | ZSC 2047 | ZI 2047 | VALVE ACTUATOR

RO-V-2037 | RO-V-2038 | 4"-PCR-CPVC-02 | 4"-PCR-CPVC-02 | IW 51-I-006 | RO CIP PERMEATE RETURN

480V | HS 2048 | LOR | HS 2048 | OSC | ZLC 2048 | ZLO 2048 | ZSC 2048 | ZSO 2048 | VALVE ACTUATOR

AIT 2004 | COND | 24V | AE 2004 | COND | D

RO-V-2050 | SAMPLE LINE | TO TRAIN SAMPLE/ANALYZER PANEL | RO-V-2049

RO-V-2045 | RO-V-2046 | PIT 2007 | PG 2007 | FIT 2003 | 24V | FE 2003 | M | 2 1/2"

RO-V-2043 | 2 1/2"-ROC-SS-12 | IM 51-I-004 | CONCENTRATE FROM RO UNIT 2 VESSELS

RO-V-2044

2 1/2"-ROC-SS-12 | NOTE 6 | RO-V-2047 | SS | PVC | 2 1/2"-ROC-PVC-02 | PIT 2008 | RO-V-2051 | RO-V-2052 | RO-V-2053 | 2 1/2"-ROC-PVC-02 | IX 51-I-006 | TO OUTFALL SYSTEM

M | 2 1/2"-ROC-SS-12 | NOTE 6 | RO-V-2048

PROVIDED BY RO SYSTEM SUPPLIER

NOTES:

1. SEE LEGEND AND ABBREVIATIONS ON DRAWINGS 00-I-001, 00-I-002 AND 00-I-003.
2. AREA CODE IS 51 UNLESS OTHERWISE NOTED. SYSTEM CODE IS RO UNLESS OTHERWISE NOTED.
3. LOCAL CONTROL DEVICES SUCH AS INDICATING LIGHTS AND SWITCHES, LOCATED ON MCCs OR AT DRIVEN EQUIPMENT, MAY NOT BE SHOWN ON THIS P&ID.
4. PIPING SIZES ARE PRELIMINARY AND TO BE FINALIZED BY ROSS.
5. CIP BLEED VALVE.
6. HIGH PRESSURE SECOND STAGE CONCENTRATE PIPING TO BE DUPLEX STAINLESS STEEL, REFER TO SPECIFICATIONS.
7. PROVIDE REMOVABLE SPOOLS, SWAPABLE FITTING, OR BLOCK AND BLEED VALVING TO PREVENT POTENTIAL CROSS-CONNECTION OF PERMATE AND CIP RETURN. FURNISH SUITABLE BLIND FLANGES TO REPLACE REMOVABLE SPOOL OR SWAPABLE FITTING AS REQUIRED.

* PROVIDED BY RO SYSTEM SUPPLIER

90% SUBMITTAL - NOT FOR CONSTRUCTION

NO.	BY	CHK	APP'D	DATE	REVISIONS AND RECORD OF USE
B	BLB	TAH	EVB	7/30/2019	60% SUBMITTAL
A	BLB	TAH	EVB	3/5/2019	30% SUBMITTAL

REGISTERED PROFESSIONAL ENGINEER BRIAN L. BUTLER No. E 16569 STATE OF CALIFORNIA ELECTRICAL

BLACK & VEATCH JOINT VENTURE BLACK & VEATCH FILANC

CITY OF MORRO BAY
MORRO BAY WATER RECLAMATION FACILITY (WRF)

RO/UV BUILDING - RO SYSTEM P&ID

RO PERMEATE/CONCENTRATE, UNIT 2

DESIGNED: BLB, ADV
DETAILED: PVR
CHECKED: TAH
APPROVED:
DATE:

0 1/2 1
IF THIS BAR DOES NOT MEASURE 1" THEN DRAWING IS NOT TO FULL SCALE

PROJECT NO. 400530

51-I-007
SHEET
OF XXX

PLOTTED: 3/17/2020 5:05:23 PM
D400530

PCS HMI

*51-RO-RIO-0301

PRESSURE PI 3007 | HI PRESSURE PAH 3006 | PRESSURE PI 3006 | IN REMOTE YI 3048 | OPENED ZIO 3048 | CLOSED ZIC 3048 | OPEN CMD ZCO 3048 | CLOSE CMD ZCC 3048 | FLOW FI 3003 | FLOW FI 3002 | IN REMOTE YI 3047 | POSITION FEEDBACK ZI 3047 | POSITION SETPT ZC 3047 | OPENED ZIO 3047 | CLOSED ZIC 3047 | COND AI 3003 | FAIL YA 3003 | FAIL YA 3004 | COND AI 3004 | IN REMOTE YI 3040 | OPENED ZIO 3040 | CLOSED ZIC 3040 | OPEN CMD ZCO 3040 | CLOSE CMD ZCC 3040 | IN REMOTE YI 3042 | OPENED ZIO 3042 | CLOSED ZIC 3042 | OPEN CMD ZCO 3042 | CLOSE CMD ZCC 3042 | PRESSURE PI 3008

MOUNT ON RO TRAIN INSTRUMENT AND SAMPLE PANEL

PG 3006 | PSH 3006 | PIT 3006 | RO-V-3033 | RO-V-3034 | RO-V-3031 | RO-V-3032 | 4"-ROP-CPVC-02

IO 51-I-005
FROM RO PERMEATE UNIT 3 VESSELS

4"-ROP-CPVC-02

FIT 3002 — 24V | FE 3002 | M | 4"

AIT 3003 — COND — 24V
AE 3003 — COND — D

RO-V-3036 SAMPLE LINE | RO-V-3035

TO TRAIN SAMPLE/ANALYZER PANEL

REMOVABLE SPOOLS (NOTE 7)

CPVC-02 | PVC-02

RO-V-3054 NOTE 5 — D

2"-ROP-PVC-02

RO-V-3039 | RO-V-3041

480V

HS 3040 | LOR | HS 3040 | OSC | ZLC 3040 | ZLO 3040 | ZSC 3040 | ZSO 3040
VALVE ACTUATOR

HS 3042 | LOR | HS 3042 | OSC | ZLC 3042 | ZLO 3042 | ZSC 3042 | ZSO 3042
VALVE ACTUATOR

480V

M — RO-V-3042

4"-ROP-PVC-02

IY 52-I-001
TO UV SYSTEM

M — RO-V-3040

4"-ROP-PVC-02

IZ 51-I-006
TO OUTFALL PS

RO-V-3037 | RO-V-3038 | 4"-PCR-CPVC-02

JA 51-I-006
RO CIP PERMEATE RETURN

HS 3047 | LOR | HS 3047 | OSC | ZT 3047 | ZSO 3047 | ZSC 3047 | ZI 3047
VALVE ACTUATOR

480V

HS 3048 | LOR | HS 3048 | OSC | ZLC 3048 | ZLO 3048 | ZSC 3048 | ZSO 3048
VALVE ACTUATOR

480V

AIT 3004 — COND — 24V
AE 3004 — COND — D

RO-V-3050 SAMPLE LINE | RO-V-3049

TO TRAIN SAMPLE/ANALYZER PANEL

RO-V-3045 | RO-V-3046

PIT 3007 | PG 3007 | FIT 3003 — 24V | FE 3003 | M | 2 1/2"

RO-V-3043 | 2 1/2"-ROC-SS-12 | RO-V-3044

IP 51-I-005
CONCENTRATE FROM RO UNIT 3 VESSELS

2 1/2"-ROC-SS-12 NOTE 6

RO-V-3047

SS | PVC

PIT 3008 | RO-V-3051

2 1/2"-ROC-PVC-02

RO-V-3052 | RO-V-3053

2 1/2"-ROC-PVC-02

JB 51-I-006
TO OUTFALL SYSTEM

M — RO-V-3048

2 1/2"-ROC-SS-12 NOTE 6

PROVIDED BY RO SYSTEM SUPPLIER

NOTES:

1. SEE LEGEND AND ABBREVIATIONS ON DRAWINGS 00-I-001, 00-I-002 AND 00-I-003.
2. AREA CODE IS 51 UNLESS OTHERWISE NOTED. SYSTEM CODE IS RO UNLESS OTHERWISE NOTED.
3. LOCAL CONTROL DEVICES SUCH AS INDICATING LIGHTS AND SWITCHES, LOCATED ON MCCs OR AT DRIVEN EQUIPMENT, MAY NOT BE SHOWN ON THIS P&ID.
4. PIPING SIZES ARE PRELIMINARY AND TO BE FINALIZED BY ROSS.
5. CIP BLEED VALVE.
6. HIGH PRESSURE SECOND STAGE CONCENTRATE PIPING TO BE DUPLEX STAINLESS STEEL, REFER TO SPECIFICATIONS.
7. PROVIDE REMOVABLE SPOOLS, SWAPABLE FITTING, OR BLOCK AND BLEED VALVING TO PREVENT POTENTIAL CROSS-CONNECTION OF PERMATE AND CIP RETURN. FURNISH SUITABLE BLIND FLANGES TO REPLACE REMOVABLE SPOOL OR SWAPABLE FITTING AS REQUIRED.

* PROVIDED BY RO SYSTEM SUPPLIER

90% SUBMITTAL - NOT FOR CONSTRUCTION

NO.	BY	CHK	APP	DATE	REVISIONS AND RECORD OF USE
B	BLB	TAH	EVB	7/30/2019	60% SUBMITTAL
A	BLB	TAH	EVB	3/5/2019	30% SUBMITTAL

REGISTERED PROFESSIONAL ENGINEER — BRIAN L. BUTLER — No. E 16569 — ELECTRICAL — STATE OF CALIFORNIA

BLACK & VEATCH

JOINT VENTURE

FILANC

BLACK & VEATCH

CITY OF MORRO BAY
MORRO BAY WATER RECLAMATION FACILITY (WRF)

RO/UV BUILDING - RO SYSTEM P&ID

RO PERMEATE/CONCENTRATE, UNIT 3

DESIGNED: BLB, ADV
DETAILED: PVR
CHECKED: TAH
APPROVED:
DATE:

0 1/2 1
IF THIS BAR DOES NOT MEASURE 1" THEN DRAWING IS NOT TO FULL SCALE

PROJECT NO. 400530

51-I-008
SHEET OF XXX

PLOTTED: 3/17/2020 5:05:28 PM
D400530

PCS HMI: LEVEL LI 0101 | TEMP TI 0001 | IN REMOTE YI 0001 | RUNNING YIR 0001 | FAIL YA 0001 | ENABLE YC 0001 | CIP TNK LWCO YC 0001 | FLOW FI 0101 | OPENED ZIO 0103 | CLOSED ZIC 0103 | IN REMOTE YI 0103 | OPEN CMD ZCO 0103 | CLOSE CMD ZCC 0103 | HI LEVEL LAH 0101 | LO LEVEL LAL 0101 | LEVEL LI 0201 | pH AI 0201 | FAIL YA 0201 | IN REMOTE YI 0001 | RUNNING YIR 0001 | FAIL YA 0001 | RUN CMD UCR 0001 | HI LEVEL LAH 0201 | LO LEVEL LAL 0201 | PCS HMI

PCS HMI: HI LEVEL LAH 0001 | EYEWASH FLOW FAH 0001 | PCS HMI

*51-RO-PLC-0001: LEVEL LI 0101 | TEMP TI 0001 | IN REMOTE YI 0001 | RUNNING YIR 0001 | FAIL YA 0001 | ENABLE YC 0001 | CIP TNK LWCO YC 0001 | FLOW FI 0101 | OPENED ZIO 0103 | CLOSED ZIC 0103 | IN REMOTE YI 0103 | OPEN CMD ZCO 0103 | CLOSE CMD ZCC 0103 | HI LEVEL LAH 0101 | LO LEVEL LAL 0101 | LEVEL LI 0201 | pH AI 0201 | FAIL YA 0201 | IN REMOTE YI 0001 | RUNNING YIR 0001 | FAIL YA 0001 | RUN CMD UCR 0001 | HI LEVEL LAH 0201 | LO LEVEL LAL 0201 | *51-RO-PLC-0001

51-CTRL-RIO-0001: HI LEVEL LAH 0001 | EYEWASH FLOW FAH 0001 | 51-CTRL-RIO-0001

HS 0103 LOR / HS 0103 OSC / ZLC 0103 / ZLO 0103 / ZSC 0103 / ZSO 0103 — 480V — VALVE ACTUATOR

LOCAL STARTER 51-RO-LCP-0003

120V — FSH 0001 — FROM POTABLE WATER SUPPLY — 1"-PW-CPVC-02 — 51-RO-EMEW-0001

IS 51-I-006 RO PERMEATE RETURN — 4"-PCR-CPVC-02

24V — FIT 0101 — CIP-V-0002 — CIP-V-0001 — CIP-V-0104

JD 51-I-010 RO CLEANING RETURN/RECIRC — 6"-CIPR-CPVC-02 — CIP-V-0201

JM 52-I-001 RO PERMEATE (MAKEUP) — 4"-ROP-PVC-02 — 3"-ROP-PVC-02 — FE 0101 M — 3" — CIP-V-0102 — CIP-V-0103 — CIP-V-0101

UN 90-I-006 CITRIC ACID — 2"-CA-CPVC-02 — 1/2"-CA-PE-06 — 1"-CA-CPVC-02 — CIP-V-0102 — CA-V-0201 — 1"-CA-PVC-02

UI 90-I-003 SODIUM HYDROXIDE — 2"-NAOH-CPVC-02 — 3/4"-NAOH-PE-06 — 3/4"-NAOH-CS-02 — CIP-V-0102 — NAOH-V-0201 — 3/4"-NAOH-CS-02 — CA-V-0101 — NAOH-V-0101

6" VENT — TANK IMMERSION HEATER — OVERFLOW (NOTE 6) — 480V — CIP MAKEUP TANK CIP-T-0101 — 6"-OF-PVC-02

LSH 0101 — LG 0101 — LIT 0101 — CIP-V-0105 — LSL 0101 — CIP-V-0106 — CIP-V-0107

24V — AIT 0201 pH — AE 0201 pH — LIT 0201 — 6"-OF-PVC-02 — (NOTE 6) — NEUTRALIZATION TANK CIP-T-0201 — CIP-V-0202 — CIP-V-0203 — CIP-V-0204 — CIP-V-0205 — 3"-CIP-PVC-02

LSH 0201 — LG 0201 — LSL 0201

6"-CIPS-CPVC-02 — JC 51-I-010 TO CIP FEED PUMPS — LSH 0001 — NEUTRALIZED CIP TO SITE SEWER

NOTES:

1. SEE LEGEND AND ABBREVIATIONS ON DRAWING 00-I-001, 00-I-002 AND 00-I-003.
2. AREA CODE IS 51 UNLESS OTHERWISE NOTED. SYSTEM CODE IS CIP UNLESS OTHERWISE NOTED.
3. LOCAL CONTROL DEVICES SUCH AS INDICATING LIGHTS AND SWITCHES, LOCATED IN MCC's OR AT DRIVEN EQUIPMENT MAY NOT INDICATED ON THIS P&ID.
4. ALL INTERCONNECTING PIPE TO BE SIZED BY ROSS AND PROVIDED AND INSTALLED BY CONTRACTOR.
5. VALVE PROVIDED TO THROTTLE FLOW TO CIP TANK TO ENSURE SUFFICIENT FLOW IS MAINTAINED TO DOWNSTREAM PROCESS.
6. PROVIDE 12" OF HEADSPACE ABOVE OVERFLOW FLUID LEVEL AND UNDERSIDE OF TANK ROOF TO PROVIDE VENTED AIR GAP.

* INDICATES ITEM FURNISHED BY ROSS (REVERSE OSMOSIS SYSTEM SUPPLIER).

90% SUBMITTAL - NOT FOR CONSTRUCTION

NO.	BY	CHK	APP'D	DATE	REVISIONS AND RECORD OF USE
B	BLB	TAH	EVB	7/30/2019	60% SUBMITTAL
A	BLB	TAH	EVB	3/5/2019	30% SUBMITTAL

REGISTERED PROFESSIONAL ENGINEER — BRIAN L. BUTLER — No. E 16569 — ELECTRICAL — STATE OF CALIFORNIA

BLACK & VEATCH

JOINT VENTURE

BLACK & VEATCH — FILANC

CITY OF MORRO BAY
MORRO BAY WATER
RECLAMATION FACILITY (WRF)

RO/UV BUILDING - RO SYSTEM
P&ID
RO CIP TANKS

DESIGNED: BLB, ADV
DETAILED: PVR
CHECKED: TAH
APPROVED:
DATE:

0 1/2 1
IF THIS BAR DOES NOT MEASURE 1" THEN DRAWING IS NOT TO FULL SCALE

PROJECT NO. 400530

51-I-009
SHEET OF XXX

PLOTTED: 3/17/2020 5:05:34 PM
D400530

PCS HMI | >51-RO-PLC-0001

RUNNING YIR 0101 | FAIL YA 0101 | IN REMOTE YI 0101 | RUN CMD UCR 0101 | SPEED FEEDBACK SI 0101 | SPEED SETPT SC 0101

RUNNING YIR 0201 | FAIL YA 0201 | IN REMOTE YI 0201 | RUN CMD UCR 0201 | SPEED FEEDBACK SI 0201 | SPEED SETPT SC 0201

TEMP TI 0001

pH AI 0001 | FAIL YA 0001 | HI PRESSURE PAH 0001 | DIFF. PRESSURE PDAH 0001 | FLOW FI 0001

PCS HMI | >51-RO-PLC-0001

PCS HMI | 51-CTRL-RIO-0001

FAIL UA 0001

TEMPERATURE CONTROL PANEL
51-RO-TCP-0001

PCS HMI | 51-CTRL-RIO-0001

* 51-RO-VFD-0101
* 51-RO-LCP-0003
* 51-RO-VFD-0201

IH | 51-I-003
RO CLEANING RETURN / FEED

6"-CIPR-CPVC-02

6"-CIPR-CPVC-02

RO-V-0292

6"-CIPR-CPVC-02

JD | 51-I-009
RO CLEANING TO / FROM RO CIP TANKS

* PDSH 0001
* PDG 0001

* AIT 0001 pH
24V

* TIT 0001
* TE 0001

* AE 0001 pH

* PSH 0001

CIP-V-0007 | CIP-V-0009

CIP-V-0006 | CIP-V-0008

CIP-V-0012

CIP-V-0015

CIP-FE-0001

FIT 0001 24V

FE 0001

M

6"

6"-CIPS-CPVC-02

CIP-V-0018

CIP-V-0017

CIP-V-0016

6"-CIPS-CPVC-02

6"-CIPS-CPVC-02

JE | 51-I-003
TO RO UNIT 1

6"-CIPS-CPVC-02

JF | 51-I-004
TO RO UNIT 2

JG | 51-I-005
TO RO UNIT 3

* PG 0101

CIP-V-0109 | CIP-V-0111

CIP-V-0110

CIP-V-0002

CIP-V-0004

CIP-V-0005

CIP-V-0003

SAMPLE

CIP CARTRIDGE FILTER
CIP-FLC-0001

CIP-V-0014

CIP-V-0013

SAMPLE

CIP-V-0108

CIP PUMP 1
CIP-P-0011

JC | 51-I-009
FROM CIP TANK PERMEATE CLEANING RETURN

6"-CIPS-CPVC-02

CIP-V-0010 | CIP-V-0011

DRAINS TO CONTAINMENT AREA

* PG 0201

CIP-V-0206

CIP-V-0207

CIP-V-0208 | CIP-V-0209

CIP PUMP 2
CIP-P-0012

* - EQUIPMENT WITHIN BOX

NOTES:

1. SEE LEGEND AND ABBREVIATIONS ON DRAWING 00-I-001, 00-I-002 AND 00-I-003.
2. AREA CODE IS 51 UNLESS OTHERWISE NOTED. SYSTEM CODE IS CIP UNLESS OTHERWISE NOTED.
3. LOCAL CONTROL DEVICES SUCH AS INDICATING LIGHTS AND SWITCHES, LOCATED ON MCC's OR AT DRIVEN EQUIPMENT, MAY NOT BE SHOWN ON THIS P&ID.
4. ALL INTERCONNECTING PIPE TO BE SIZED BY ROSS AND PROVIDED AND INSTALLED BY CONTRACTOR.

* INDICATES ITEM FURNISHED BY ROSS (REVERSE OSMOSIS SYSTEM SUPPLIER).

90% SUBMITTAL - NOT FOR CONSTRUCTION

NO.	BY	CHK	APP'D	DATE	REVISIONS AND RECORD OF USE
B	BLB	TAH	EVB	7/30/2019	60% SUBMITTAL
A	BLB	TAH	EVB	3/5/2019	30% SUBMITTAL

REGISTERED PROFESSIONAL ENGINEER
BRIAN L. BUTLER
No. E 16569
ELECTRICAL
STATE OF CALIFORNIA

BLACK & VEATCH
JOINT VENTURE
BLACK & VEATCH
FILANC

CITY OF MORRO BAY
MORRO BAY WATER RECLAMATION FACILITY (WRF)

RO/UV BUILDING - RO SYSTEM
P&ID
RO CIP PUMPS

DESIGNED: BLB, ADV
DETAILED: PVR
CHECKED: TAH
APPROVED:
DATE:

0 1/2 1
IF THIS BAR DOES NOT MEASURE 1" THEN DRAWING IS NOT TO FULL SCALE

PROJECT NO.
400530

51-I-010
SHEET
OF XXX

PLOTTED: 3/17/2020 5:05:39 PM
D400530

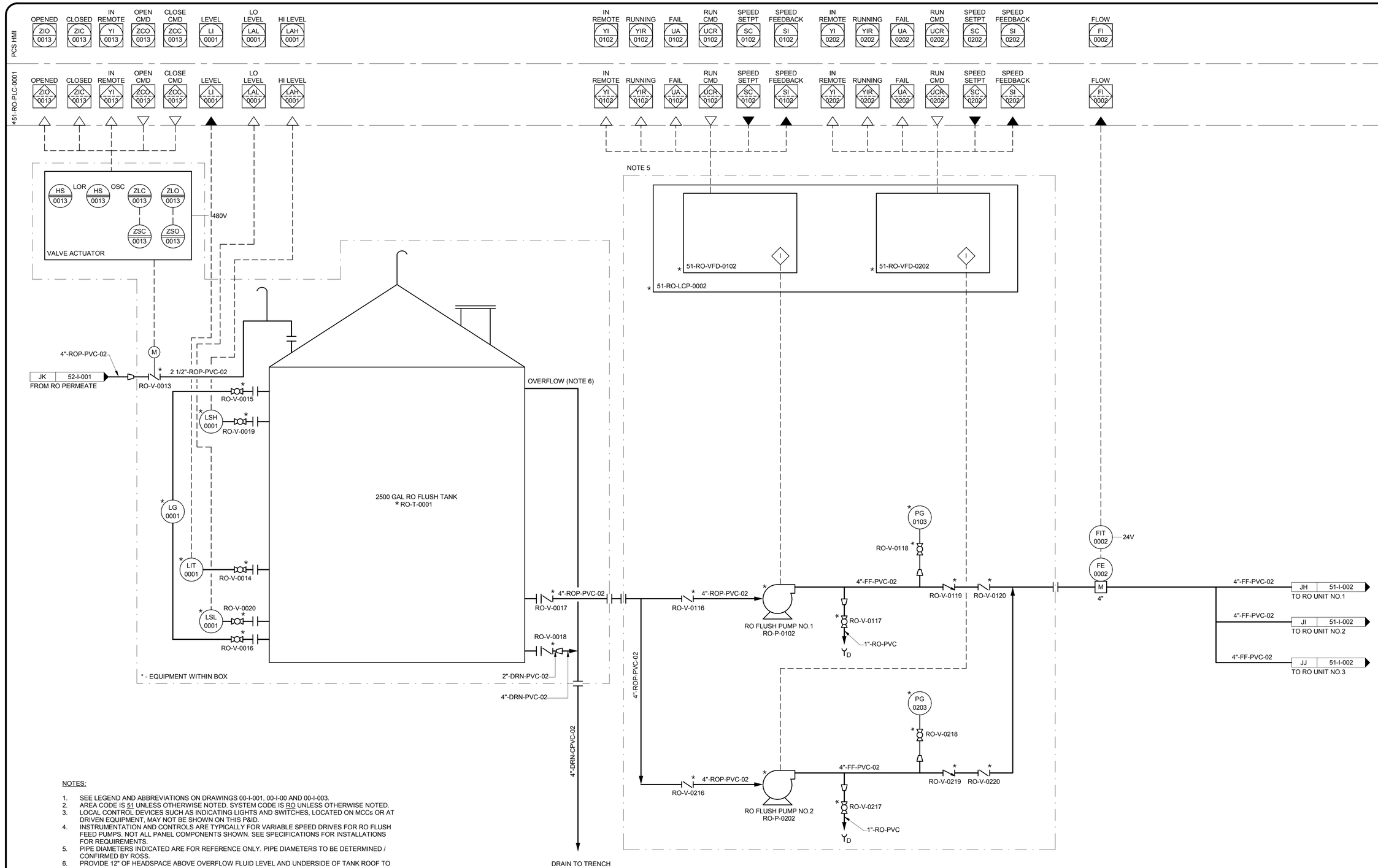

NOTES:

1. SEE LEGEND AND ABBREVIATIONS ON DRAWINGS 00-I-001, 00-I-00 AND 00-I-003.
2. AREA CODE IS 51 UNLESS OTHERWISE NOTED. SYSTEM CODE IS RO UNLESS OTHERWISE NOTED.
3. LOCAL CONTROL DEVICES SUCH AS INDICATING LIGHTS AND SWITCHES, LOCATED ON MCCs OR AT DRIVEN EQUIPMENT, MAY NOT BE SHOWN ON THIS P&ID.
4. INSTRUMENTATION AND CONTROLS ARE TYPICALLY FOR VARIABLE SPEED DRIVES FOR RO FLUSH FEED PUMPS. NOT ALL PANEL COMPONENTS SHOWN. SEE SPECIFICATIONS FOR INSTALLATIONS FOR REQUIREMENTS.
5. PIPE DIAMETERS INDICATED ARE FOR REFERENCE ONLY. PIPE DIAMETERS TO BE DETERMINED / CONFIRMED BY ROSS.
6. PROVIDE 12" OF HEADSPACE ABOVE OVERFLOW FLUID LEVEL AND UNDERSIDE OF TANK ROOF TO PROVIDE VENTED AIR GAP.

* PROVIDED BY RO SYSTEM SUPPLIER

NO.	BY	CHK	APP	DATE	REVISIONS AND RECORD OF USE
B	BLB	TAH	EVB	7/30/2019	60% SUBMITTAL
A	BLB	TAH	EVB	3/5/2019	30% SUBMITTAL

REGISTERED PROFESSIONAL ENGINEER
BRIAN L. BUTLER
No. E 16569
ELECTRICAL
STATE OF CALIFORNIA

BLACK & VEATCH
JOINT VENTURE
BLACK & VEATCH
FILANC

CITY OF MORRO BAY
MORRO BAY WATER
RECLAMATION FACILITY (WRF)

RO/UV BUILDING - RO SYSTEM
P&ID
RO FLUSH SYSTEM

DESIGNED: BLB, ADV
DETAILED: PVR
CHECKED: TAH
APPROVED:
DATE:

0 1/2 1
IF THIS BAR DOES NOT MEASURE 1" THEN DRAWING IS NOT TO FULL SCALE

PROJECT NO.
400530

51-I-011
SHEET
OF XXX

90% SUBMITTAL - NOT FOR CONSTRUCTION

PLOTTED: 3/17/2020 5:05:44 PM
D400530

PCS HMI

52-UV-PLC-0001

OPENED ZIO 0005 | CLOSED ZIC 0005 | IN REMOTE YI 0005 | OPEN CMD ZCO 0005 | CLOSE CMD ZCC 0005

FREE CL2 AI 0004 | UVT ANALYZER AI 0005 | pH AI 0002 | TOTAL CL2 AI 0003 | TOTAL CL2 AI 0001 | TOTAL CL2 AI 0009 | FREE CL2 AI 0008 | pH AI 0007 | UVT ANALYZER AI 0006

FLOW FI 0001 | OPENED ZIO 0012 | CLOSED ZIC 0012 | IN REMOTE YI 0012 | OPEN CMD ZCO 0012 | CLOSE CMD ZCC 0012 | OPENED ZIO 0013 | CLOSED ZIC 0013 | IN REMOTE YI 0013 | OPEN CMD ZCO 0013 | CLOSE CMD ZCC 0013

120V — UV MASTER CONTROL PANEL 52-UV-LCP-0001

HS 0005 | LOR | HS 0005 | OSC | ZLC 0005 | ZLO 0005 | ZSC 0005 | ZSO 0005 — VALVE ACTUATOR

HS 0012 | LOR | HS 0012 | OSC | ZLC 0012 | ZLO 0012 | ZSC 0012 | ZSO 0012 — VALVE ACTUATOR

HS 0013 | LOR | HS 0013 | OSC | ZLC 0013 | ZLO 0013 | ZSC 0013 | ZSO 0013 — VALVE ACTUATOR

480V — LCP-0101

UE | 90-I-002 — SODIUM HYPOCHLORITE
2"-NACL-CPVC-02
1/2"-NACL-TEFL-01

UQ | 90-I-007 — SULFURIC ACID
2"-SA-CPVC-02
1/2"-SA-TEFL-01

IY | 51-I-008 — FROM RO TRAIN 3

IU | 51-I-007 — FROM RO TRAIN 2

IQ | 51-I-006 — FROM RO TRAIN 1

ROP-V-0004
ROP-V-0003
ROP-V-0005
NOTE 6
HSO4-V-0001
HSO4-V-0002
HSO4-V-0003
NOCL-V-0001
NOCL-V-0002
NOCL-V-0003
1"-NACL-CPVC-02
1"-SA-CPVC-02
4"-ROP-PVC-02
8"-ROP-PVC-02

UV-V-0001
UV-V-0002
UV-V-0004
UV-V-0102
STATIC MIXER UV-MXS-0001
UV DISINFECTION UNIT UV-UVU-0101
8"-ROP-PVC-02
UV-V-0101
NOTE 5
8"-UVE-PVC-02
UV-V-0102
NOTE 7
UV-V-0103

24V — FIT 0001 — FE 0001 — M — 8"
UV-V-0007

M — FC — UV-V-0012 — 8"-UVE-PVC-02 — JN | 61-I-001 — TO CALCITE FILTERS

M — FO — UV-V-0013 — 8"-UVE-PVC-02 — JO | 64-I-001 — OFFSPEC EFFLUENT TO OUTFALL BALANCING TANK

51-I-011 | JK — TO RO FLUSH TANK — 4"-ROP-PVC-02

51-I-009 | JM — TO RO CIP TANK — 4"-ROP-PVC-02

1"-ROP-PVC-02
1/2"-ROP-PVC-02
1/2"-ROP-PVC-02
1/2"-ROP-PVC-02

FREE CL2 AIT 0004 | UVT AIT 0005 | pH AIT 0002 | TOTAL CL2 AIT 0003 | TOTAL CL2 AIT 0001 | TOTAL CL2 AIT 0009 | FREE CL2 AIT 0008 | pH AIT 0007 | UVT AIT 0006

FREE CL2 AE 0004 | UVT AE 0005 | pH AE 0002 | TOTAL CL2 AE 0003 | TOTAL CL2 AE 0001 | TOTAL CL2 AE 0009 | FREE CL2 AE 0008 | pH AE 0007 | UVT AE 0006

FG 0004 | FG 0005 | FG 0002 | FG 0003 | FG 0001 | FG 0009 | FG 0008 | FG 0007 | FG 0006

UV-V-0005 | UV-V-0006 | UV-V-0003 | UV-V-0011 | UV-V-0010 | UV-V-0009 | UV-V-0008

UV/AOP ANALYZER PANEL — 120V — Y_D

NOTES:

1. SEE LEGEND AND ABBREVIATIONS ON DRAWINGS 00-I-001, 00-I-002 AND 00-I-003.
2. AREA CODE IS 52 UNLESS OTHERWISE NOTED. SYSTEM CODE IS UV UNLESS OTHERWISE NOTED.
3. LOCAL CONTROL DEVICES SUCH AS INDICATING LIGHTS AND SWITCHES, LOCATED ON MCCs OR AT DRIVEN EQUIPMENT, MAY NOT BE SHOWN ON THIS P&ID.
4. INSTRUMENTATION PANEL PROVIDED BY UV SUPPLIER, FINAL INSTRUMENTATION SELECTION TO BE CONFIRMED DURING FINAL EQUIPMENT SELECTION.
5. UV INFLUENT PIPING SIZE AND STRAIGHT RUNS TO BE DETERMINED BY THE SELECTED UV SUPPLIER.
6. ELEVATED PIPING LOOP WITH AUTOMATIC DRAIN, TO PREVENT POSSIBILITY OF CHLORINATED WATER INTERACTING WITH RO EQUIPMENT.
7. DRAIN VALVES TO BE OPENED WHEN UV NOT IN SERVICE TO PREVENT FLOW PASSAGE THROUGH UNITS. ROUTE DISCHARGE TO DRAIN.

90% SUBMITTAL - NOT FOR CONSTRUCTION

NO.	BY	CHK	APP'D	DATE	REVISIONS AND RECORD OF USE
B	BL	B TAH	EVB	7/30/2019	60% SUBMITTAL
A	BL	B TAH	EVB	3/5/2019	30% SUBMITTAL

REGISTERED PROFESSIONAL ENGINEER — BRIAN L. BUTLER — No. E 16569 — ELECTRICAL — STATE OF CALIFORNIA

BLACK & VEATCH — JOINT VENTURE — BLACK & VEATCH — FILANC

CITY OF MORRO BAY
MORRO BAY WATER RECLAMATION FACILITY (WRF)

RO/UV BUILDING - UV SYSTEM
P&ID
UV/AOP SYSTEM

DESIGNED: Designer
DETAILED: Author
CHECKED: Checker
APPROVED: Approver
DATE:

0 1/2 1
IF THIS BAR DOES NOT MEASURE 1" THEN DRAWING IS NOT TO FULL SCALE

PROJECT NO. 400530

52-I-001
SHEET
OF XXX

PLOTTED: 3/17/2020 5:05:55 PM
D400530

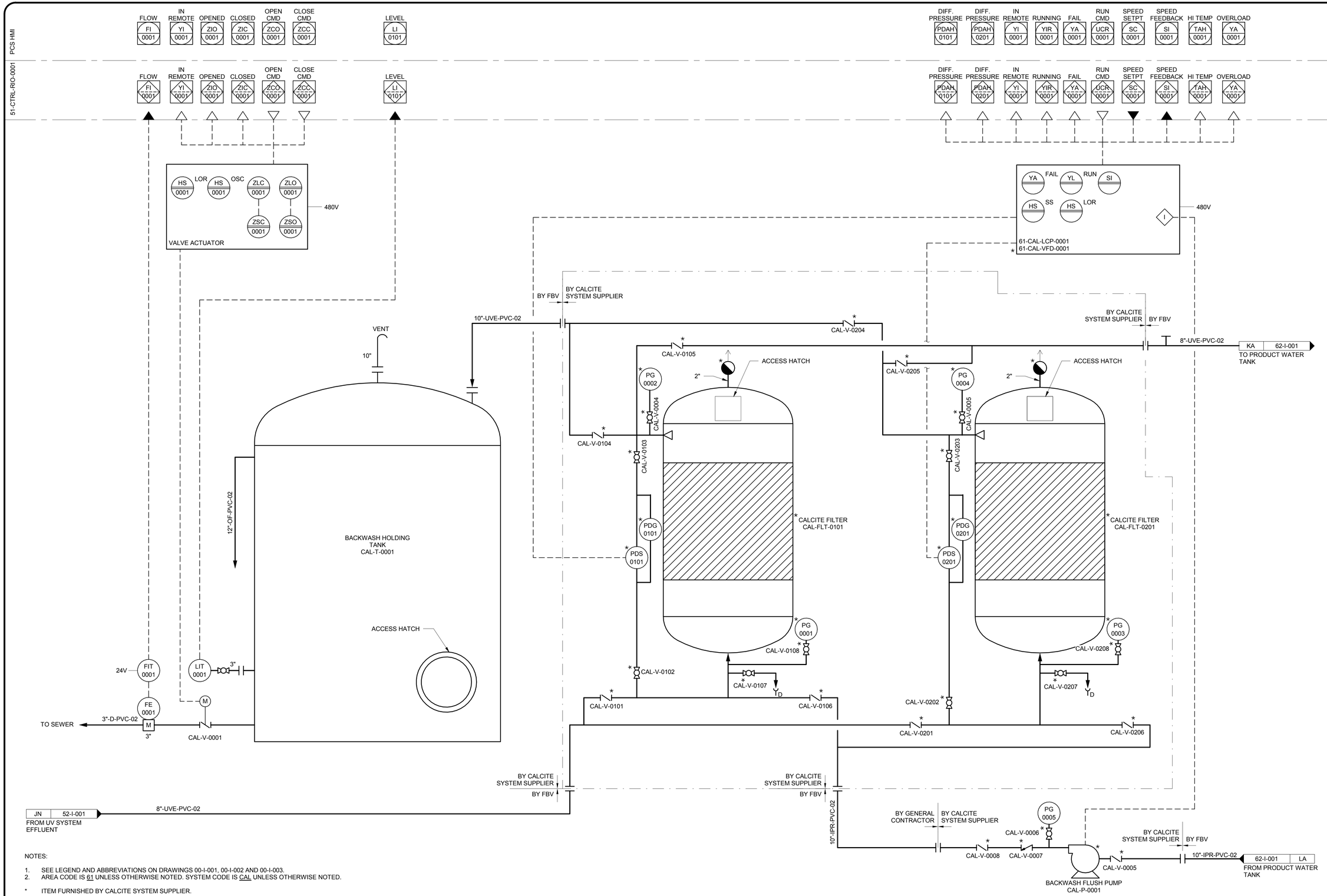

NOTES:

1. SEE LEGEND AND ABBREVIATIONS ON DRAWINGS 00-I-001, 00-I-002 AND 00-I-003.
2. AREA CODE IS 61 UNLESS OTHERWISE NOTED. SYSTEM CODE IS CAL UNLESS OTHERWISE NOTED.

* ITEM FURNISHED BY CALCITE SYSTEM SUPPLIER.

90% SUBMITTAL- NOT FOR CONSTRUCTION

NO.	BY	CHK	APP
B	BLB	TAH	EVB
A	BLB	TAH	EVB

DATE	REVISIONS AND RECORD OF USE
7/30/2019	60% SUBMITTAL
3/5/2019	30% SUBMITTAL

REGISTERED PROFESSIONAL ENGINEER BRIAN L. BUTLER No. E 16569 ELECTRICAL STATE OF CALIFORNIA

BLACK & VEATCH

JOINT VENTURE

FILANC

BLACK & VEATCH

CITY OF MORRO BAY
MORRO BAY WATER
RECLAMATION FACILITY (WRF)

PRODUCT WATER AREA - CALCITE CONTACTOR
P&ID
CALCITE REMINERALIZATION SYSTEM

DESIGNED: BLB, KEZ
DETAILED: PVR
CHECKED: TAH
APPROVED:
DATE:

0 1/2 1
IF THIS BAR DOES NOT MEASURE 1" THEN DRAWING IS NOT TO FULL SCALE

PROJECT NO. 400530

61-I-001
SHEET
OF

PLOTTED: 3/17/2020 5:00:29 PM
D400530

PCS HMI

51-CTRL-RIO-0001

LEVEL LI 0001

LO-LO LEVEL LALL 0001

HI-HI LEVEL LAHH 0001

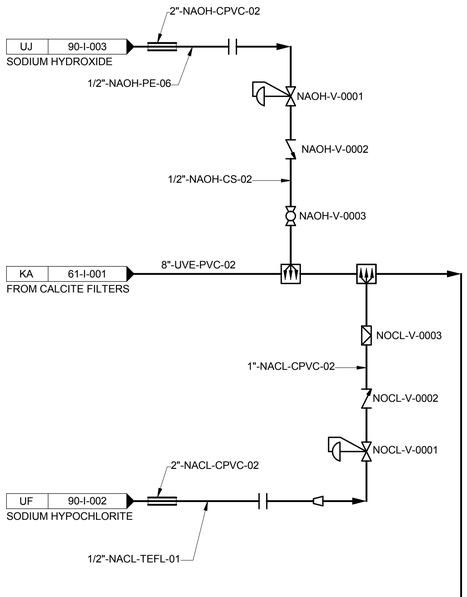

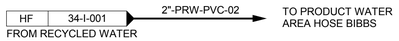

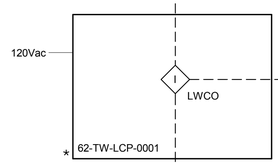

TO 63-IPR-VFD-0101 ON 63-I-001 (TYPICAL FOR 63-IPR-VFD-0201 & 63-IPR-VFD-0301)

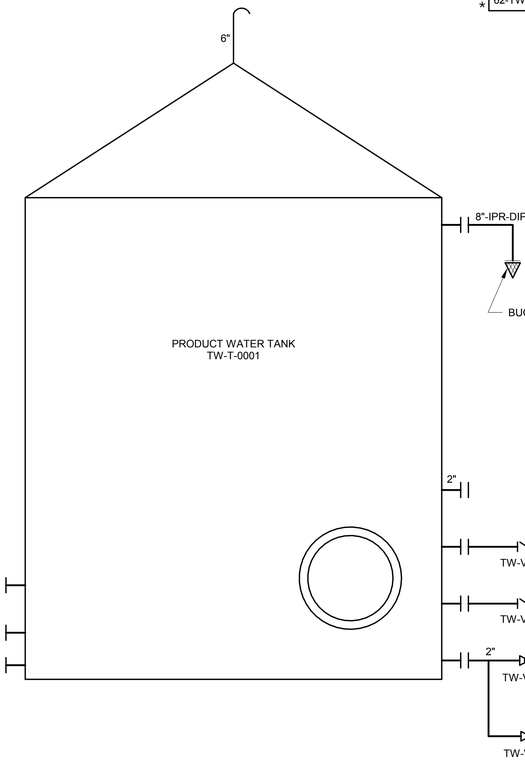

NOTES:

1. SEE LEGEND AND ABBREVIATIONS ON DRAWINGS 00-I-001, 00-I-002 AND 00-I-003.
2. AREA CODE IS 62 UNLESS OTHERWISE NOTED. SYSTEM CODE IS TW UNLESS OTHERWISE NOTED.
3. LOCAL CONTROL DEVICES SUCH AS INDICATING LIGHTS AND SWITCHES, LOCATED ON MCCs OR AT DRIVEN EQUIPMENT, MAY NOT BE SHOWN ON THIS P&ID.

90% SUBMITTAL - NOT FOR CONSTRUCTION

NO.	BY	CHK	APP	DATE	REVISIONS AND RECORD OF USE
B	BLB	TAH	EVB	7/30/2019	60% SUBMITTAL
A	BLB	TAH	EVB	3/5/2019	30% SUBMITTAL

REGISTERED PROFESSIONAL ENGINEER
BRIAN L. BUTLER
No. E 16569
ELECTRICAL
STATE OF CALIFORNIA

BLACK & VEATCH
JOINT VENTURE
BLACK & VEATCH
FILANC

CITY OF MORRO BAY
MORRO BAY WATER
RECLAMATION FACILITY (WRF)

PRODUCT WATER AREA - IPR PRODUCT WATER STORAGE TANK P&ID
IPR PRODUCT WATER STORAGE TANK

DESIGNED: BLB, KEZ
DETAILED: PVR
CHECKED: TAH
APPROVED:
DATE:

0 1/2 1
IF THIS BAR DOES NOT MEASURE 1" THEN DRAWING IS NOT TO FULL SCALE

PROJECT NO.
400530

62-I-001
SHEET
OF

PLOTTED: 3/17/2020 5:00:32 PM
D400530

TYPICAL I/O & CONTROLS FOR IPR WATER PUMP NO. 2 & 3

PCS HMI

51-CTRL-RIO-0001

IN REMOTE YI 0101 | RUNNING YIR 0101 | FAIL YA 0101 | RUN CMD UCR 0101 | SPEED SETPT SC 0101 | SPEED FEEDBACK SI 0101

PRESSURE PI 0001

FLOW FI 0001

CL2 AI 0001 / FAIL YA 0001 | COND AI 0002 / FAIL YA 0002 | pH AI 0003 / FAIL YA 0003

PCS HMI

51-CTRL-RIO-0001

IN REMOTE YI 0101 | RUNNING YIR 0101 | FAIL YA 0101 | RUN CMD UCR 0101 | SPEED SETPT SC 0101 | SPEED FEEDBACK SI 0101

PRESSURE PI 0001

FLOW FI 0001

CL2 AI 0001 / FAIL YA 0001 | COND AI 0002 / FAIL YA 0002 | pH AI 0003 / FAIL YA 0003

120V

AIT 0001 CL2 | AIT 0002 COND | AIT 0003 pH

AE 0001 CL2 | AE 0002 COND | AE 0003 pH

IPR PRODUCT WATER WATER ANALYZER PANEL

(LOCATED IN RO/UV BUILDING)

FROM 62-I-001

63-ELEC-MCC-0001 / 63-IPR-VFD-0101

PSH 0101

PG 0101

TW-V-0103

6"-IPR-DIP

6"-IPR-DIP

TW-V-0101

IPR PUMP NO. 1 TW-P-0101

TW-V-0104

TW-V-0105

TW-V-0102

SEE TYPICAL I/O & CONTROLS

10"-IPR-DIP

LB 62-I-001

FROM PRODUCT WATER TANK

10"-IPR-DIP

PSH 0201

PG 0201

TW-V-0203

6"-IPR-DIP

6"-IPR-DIP

TW-V-0201

IPR PUMP NO. 2 TW-P-0201

TW-V-0204

TW-V-0205

TW-V-0202

SEE TYPICAL I/O & CONTROLS

10"-IPR-DIP

PSH 0301

PG 0301

TW-V-0303

6"-IPR-DIP

6"-IPR-DIP

TW-V-0301

IPR PUMP NO. 3 TW-P-0301

TW-V-0304

TW-V-0305

TW-V-0302

8"-IPR-DIP

8"-IPR-DIP

8"-IPR-DIP

1"-IPR-PVC-02

PIT 0001

TW-V-0001

TW-V-0107

24V

TW-V-0106

FIT 0001

FE 0001

M

6"

6"-IPR-DIP

TW-V-0002

12"-IPR-DIP

A/G

B/G

12"-IPR-HDPE

RO PERMEATE TO GROUNDWATER DISCHARGE

NOTES:

1. SEE LEGEND AND ABBREVIATIONS ON DRAWING 00-I-001, 00-I-002 AND 00-I-003.
2. AREA CODE IS 63 UNLESS OTHERWISE NOTED. SYSTEM CODE IS TW UNLESS OTHERWISE NOTED.
3. LOCAL CONTROL DEVICES SUCH AS INDICATING LIGHTS AND SWITCHES, LOCATED IN MCC's OR AT DRIVEN EQUIPMENT MAY NOT INDICATED ON THIS P&ID.

90% SUBMITTAL- NOT FOR CONSTRUCTION

NO.	BY	CHK	APP'D	DATE	REVISIONS AND RECORD OF USE
B	BLB	TAH	EVB	7/30/2019	60% SUBMITTAL
A	BLB	TAH	EVB	3/5/2019	30% SUBMITTAL

REGISTERED PROFESSIONAL ENGINEER BRIAN L. BUTLER No. E 16569 ELECTRICAL STATE OF CALIFORNIA

BLACK & VEATCH

JOINT VENTURE

BLACK & VEATCH

FILANC

CITY OF MORRO BAY
MORRO BAY WATER
RECLAMATION FACILITY (WRF)

PRODUCT WATER AREA - IPR PRODUCT WATER PUMP STATION P&ID
IPR PUMP STATION

DESIGNED: BLB, KEZ
DETAILED: PVR
CHECKED: TAH
APPROVED:
DATE:

0 1/2 1

IF THIS BAR DOES NOT MEASURE 1" THEN DRAWING IS NOT TO FULL SCALE

PROJECT NO. 400530

63-I-001

SHEET OF

PLOTTED: 3/17/2020 5:00:36 PM

D400530

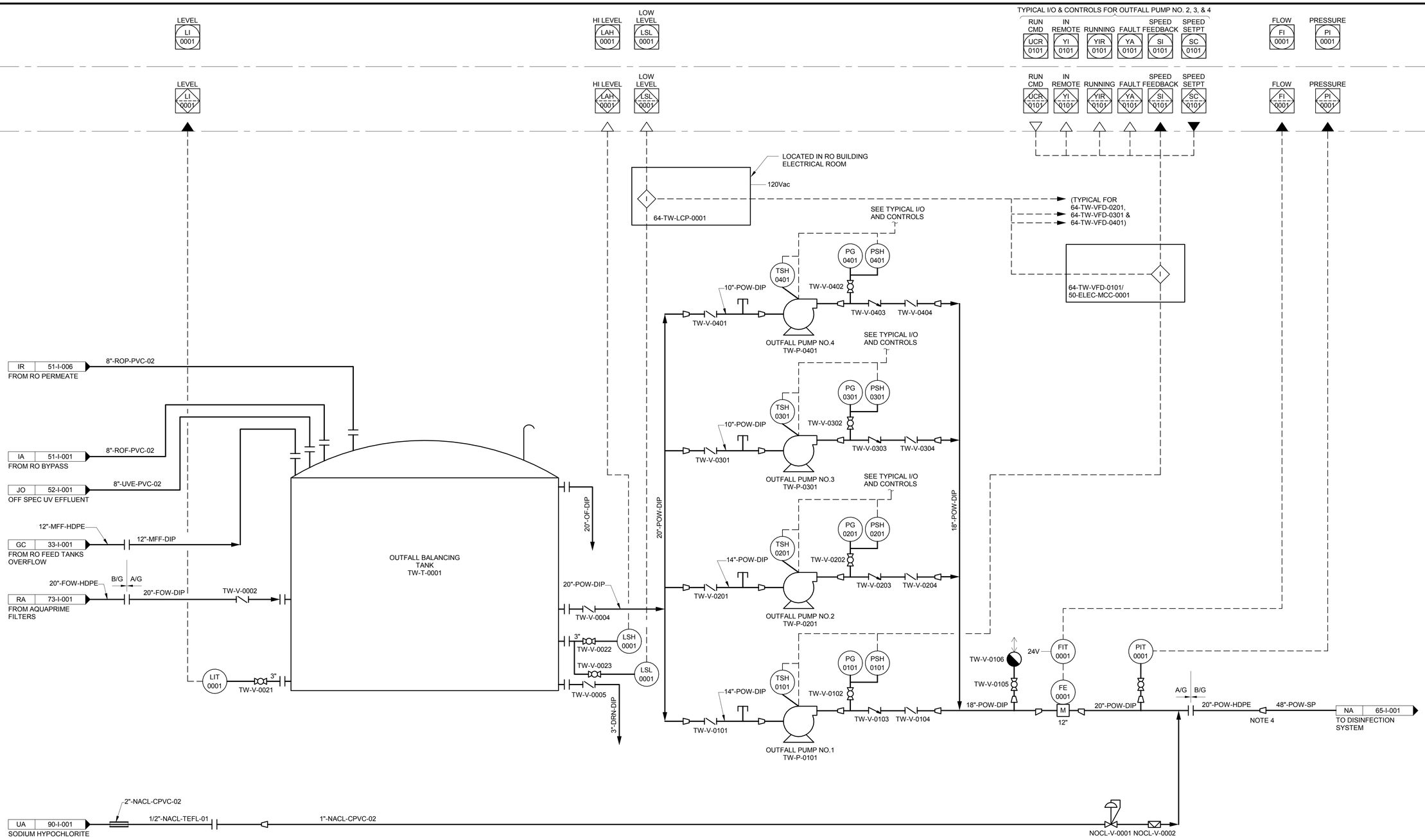

NOTES:

1. SEE LEGEND AND ABBREVIATIONS ON DRAWING 00-I-001, 00-I-002 AND 00-I-003.
2. AREA CODE IS 64 UNLESS OTHERWISE NOTED. SYSTEM CODE IS TW UNLESS OTHERWISE NOTED.
3. LOCAL CONTROL DEVICES SUCH AS INDICATING LIGHTS AND SWITCHES, LOCATED ON MCC's OR AT DRIVEN EQUIPMENT, MAY NOT BE SHOWN ON THIS P&ID.
4. OCEAN OUTFALL PIPING INCREASE TO PROVIDE VOLUME REQUIRED FOR FULL DISINFECTION PRIOR TO DECHLORINATION.

90% SUBMITTAL - NOT FOR CONSTRUCTION

NO.	BY	CHK	APP
B	BLB	TAH	EVB
A	BLB	TAH	EVB

REVISIONS AND RECORD OF USE

DATE	
7/30/2019	60% SUBMITTAL
3/5/2019	30% SUBMITTAL

REGISTERED PROFESSIONAL ENGINEER
BRIAN L. BUTLER
No. E 16569
ELECTRICAL
STATE OF CALIFORNIA

BLACK & VEATCH
JOINT VENTURE
BLACK & VEATCH
FILANC

CITY OF MORRO BAY
MORRO BAY WATER RECLAMATION FACILITY (WRF)

PRODUCT WATER AREA - OUTFALL PUMP STATION
P&ID
OUTFALL TANK & PUMPS

DESIGNED: BLB, KEZ
DETAILED: PVR
CHECKED: TAH
APPROVED:
DATE:

0 1/2 1
IF THIS BAR DOES NOT MEASURE 1" THEN DRAWING IS NOT TO FULL SCALE

PROJECT NO.
400530

64-I-001
SHEET
OF

PLOTTED: 3/17/2020 5:00:40 PM
D400530

PCS HMI

51-CTRL-RIO-0001

CL2 AI 0004 | FAIL YA 0004 | FLOW FI 0001 | TRBL FA 0001

NA 64-I-001
FROM OUTFALL PUMPS

48"-POW-SP

78"-POW-SP

POW-V-0004

B/G A/G

24"-POW-PVC-02

POW-V-0001

POW-V-0002

24"-POW-PVC-02

12"-ROC-PVC-02

A/G B/G

B/G A/G

CLEAR SECTIONS OF PIPE FOR FLOW VERIFICATION

FI

4"-ROC-PVC-02

POW-V-0005

4"-ROC-PVC-02

FI

POW-V-0006

A/G B/G

TO SANITARY LIFT STATION

4"-SAN-PVC-02

TO SANITARY LIFT STATION

14"-ROC-HDPE

IT 51-I-006
RO CONCENTRATE

4"-ROC-PVC-02

A/G B/G

14"-ROC-HDPE

UL 90-I-004
SODIUM BISULFITE

2"-NHS-CPVC-02

1/2"-NHS-PE-06

1"-NHS-CPVC-02

NHS-V-0001

NHS-V-0002

NHS-V-0003

POW-V-0003
0"

A/G B/G

24"-POW-PVC-02

24"-POW-HDPE

TO OCEAN OUTFALL

1/2"-POW-PVC-02

A/G
B/G

B/G A/G

NOTE 4

COMPOSITE SAMPLER
TW-SAMP-0001

120VAC

AIT 0004 — CL2 — 24V

AE 0004 — CL2

DECHLORINATION ANALYZER PANEL

NOTE 4

D

NOTES:

1. SEE LEGEND AND ABBREVIATIONS ON DRAWING 00-I-001, 00-I-002 AND 00-I-003.
2. AREA CODE IS 65 UNLESS OTHERWISE NOTED. SYSTEM CODE IS TW UNLESS OTHERWISE NOTED.
3. LOCAL CONTROL DEVICES SUCH AS INDICATING LIGHTS AND SWITCHES, LOCATED ON MCC's OR AT DRIVEN EQUIPMENT, MAY NOT BE SHOWN ON THIS P&ID.
4. ANALYZER PANEL AND SAMPLER TO BE LOCATED INSIDE STORAGE BUILDING.

90% SUBMITTAL- NOT FOR CONSTRUCTION

NO.	BY	CHK	APP'D	DATE	REVISIONS AND RECORD OF USE
B	BLB	TAH	EVB	7/30/2019	60% SUBMITTAL
A	BLB	TAH	EVB	3/5/2019	30% SUBMITTAL

REGISTERED PROFESSIONAL ENGINEER
BRIAN L. BUTLER
No. E 16569
ELECTRICAL
STATE OF CALIFORNIA

BLACK & VEATCH

JOINT VENTURE

BLACK & VEATCH

FILANC

CITY OF MORRO BAY
MORRO BAY WATER
RECLAMATION FACILITY (WRF)

PRODUCT WATER AREA - ISINFECTION SYSTEM
P&ID
OUTFALL DISINFECTION SYSTEM

DESIGNED: BLB, KEZ
DETAILED: PVR
CHECKED: TAH
APPROVED:
DATE:

0 1/2 1
IF THIS BAR DOES NOT MEASURE 1" THEN DRAWING IS NOT TO FULL SCALE

PROJECT NO.
400530

65-I-001
SHEET
OF

PLOTTED: 3/17/2020 5:00:44 PM

D400530

PCS HMI
72-CTRL-RIO-0001
80-CTRL-PLC-0001

LEVEL LI 0201 | FAIL YA 0201 | DO AI 0201 | FAIL YA 0101 | DO AI 0101 | LEVEL LI 0101
IN REMOTE YI 0101 | FAIL YA 0101 | RUNNING YIR 0101 | RUN CMD UCR 0101
IN REMOTE YI 0201 | FAIL YA 0201 | RUNNING YIR 0201 | RUN CMD UCR 0201

71-ELEC-MCC-0001

PD 71-I-003
FROM SLUDGE HOLDING TANK BLOWERS
4"-AA-SS-02

RB 73-I-001
FROM SAFE SOLIDS AND BACKWASH
6"-FBW-PVC-02

B/G A/G 6"-FBW-DIP
FBW-V-0101
3"-WAS-DIP
WAS-V-0101

24V AIT 0101 DO
LIT 0101 RAD
MSH 0101 TSH 0101
HS 0101 * E-STOP
AE 0101 DO
CONTRACTOR SCOPE (TYP)
DIFFUSER VENDOR SCOPE (TYP)
MIXER WAS-MXR-0101
SLUDGE HOLDING TANK NO. 1

WAS-V-0102
4"-AWS-DIP
PC 72-I-001
TO DEWATERING SLUDGE FEED PUMPS

6"-FBW-PVC-02
4"-AWS-DIP

PE 71-I-003
FROM SLUDGE HOLDING TANK BLOWERS
4"-AA-SS-02

EI 31-I-003
WAS FROM MBR
3"-WAS-PVC-02
B/G A/G
3"-WAS-DIP
WAS-V-0001

B/G A/G 6"-FBW-DIP
FBW-V-0201
WAS-V-0201

24V AIT 0201 DO
LIT 0201 RAD
MSH 0201 TSH 0201
HS 0201 * E-STOP
AE 0201 DO
CONTRACTOR SCOPE (TYP)
DIFFUSER VENDOR SCOPE (TYP)
MIXER WAS-MXR-0201
SLUDGE HOLDING TANK NO. 2

WAS-V-0202
4"-AWS-DIP

HG 34-I-001
FROM RECYCLED WATER PUMPS
2"-PRW-PVC-02
TO SLUDGE HOLDING TANKS HOSE BIBBS

3"-WAS-DIP
PF 72-I-001
TO DEWATERING SLUDGE FEED PUMPS

NOTES:
1. SEE LEGEND ON DRAWINGS 00-I-001, 00-I-002 AND 00-I-003.
2. AREA CODE IS 71 UNLESS OTHERWISE NOTED. SYSTEM CODE IS WAS UNLESS OTHERWISE INDICATED.
3. LOCAL CONTROL DEVICES SUCH AS INDICATING LIGHTS AND SWITCHES, LOCATED ON MCC'S OR AT DRIVEN EQUIPMENT, MAY NOT BE SHOWN ON THIS P&ID.

90% SUBMITTAL - NOT FOR CONSTRUCTION

NO.	BY	CHK	APP'D	DATE	REVISIONS AND RECORD OF USE
B	BLB	TAH	EVB	7/30/2019	60% SUBMITTAL
A	BLB	TAH	EVB	3/5/2019	30% SUBMITTAL

REGISTERED PROFESSIONAL ENGINEER
BRIAN L. BUTLER
No. E 16569
ELECTRICAL
STATE OF CALIFORNIA

BLACK & VEATCH
JOINT VENTURE
BLACK & VEATCH
FILANC

CITY OF MORRO BAY
MORRO BAY WATER
RECLAMATION FACILITY (WRF)

RESIDUALS AREA - SLUDGE & SAFE SETTLE TANKS
P&ID
SLUDGE HOLDING TANKS

DESIGNED: BLB, KEZ
DETAILED: PVR
CHECKED: TAH
APPROVED:
DATE:

0 1/2 1
IF THIS BAR DOES NOT MEASURE 1" THEN DRAWING IS NOT TO FULL SCALE

PROJECT NO.
400530

71-I-001
SHEET
OF

PLOTTED: 3/17/2020 5:03:58 PM
D400530

PCS HMI

72-CTRL-RIO-0001

LEVEL
LI
0001

LEVEL
LI
0001

LIT
0001
US
24V

LE
0001
US

SAFE SETTLE TANK

BA | 22-I-001
FROM SAFE DIVERSION BOX

30"-WWS-HDPE

A/G | B/G

20"-FIW-DIP

20"-FIW-HDPE

PA | 73-I-001
TO SAFE FILTER

4"-DRN-DIP

PB | 72-I-001
TO DEWATERING SLUDGE FEED PUMPS

NOTES:
1. SEE LEGEND ON DRAWINGS 00-I-001, 00-I-002 AND 00-I-003.
2. AREA CODE IS 71 UNLESS OTHERWISE NOTED. SYSTEM CODE IS WAS UNLESS OTHERWISE INDICATED.
3. LOCAL CONTROL DEVICES SUCH AS INDICATING LIGHTS AND SWITCHES, LOCATED ON MCC'S OR AT DRIVEN EQUIPMENT, MAY NOT BE SHOWN ON THIS P&ID.

90% SUBMITTAL - NOT FOR CONSTRUCTION

NO.	BY	CHK	APP	DATE	REVISIONS AND RECORD OF USE
B	BLB	TAH	EVB	7/30/2019	60% SUBMITTAL
A	BLB	TAH	EVB	3/5/2019	30% SUBMITTAL

REGISTERED PROFESSIONAL ENGINEER
BRIAN L. BUTLER
No. E 16569
ELECTRICAL
STATE OF CALIFORNIA

BLACK & VEATCH

JOINT VENTURE

BLACK & VEATCH

FILANC

CITY OF MORRO BAY
MORRO BAY WATER
RECLAMATION FACILITY (WRF)

RESIDUALS AREA - SLUDGE & SAFE SETTLE TANKS
P&ID
SAFE SETTLE SYSTEM

DESIGNED: BLB, KEZ
DETAILED: PVR
CHECKED: TAH
APPROVED:
DATE:

0 1/2 1
IF THIS BAR DOES NOT MEASURE 1" THEN DRAWING IS NOT TO FULL SCALE

PROJECT NO.
400530

71-I-002
SHEET
OF

PLOTTED: 3/17/2020 5:04:13 PM
D400530

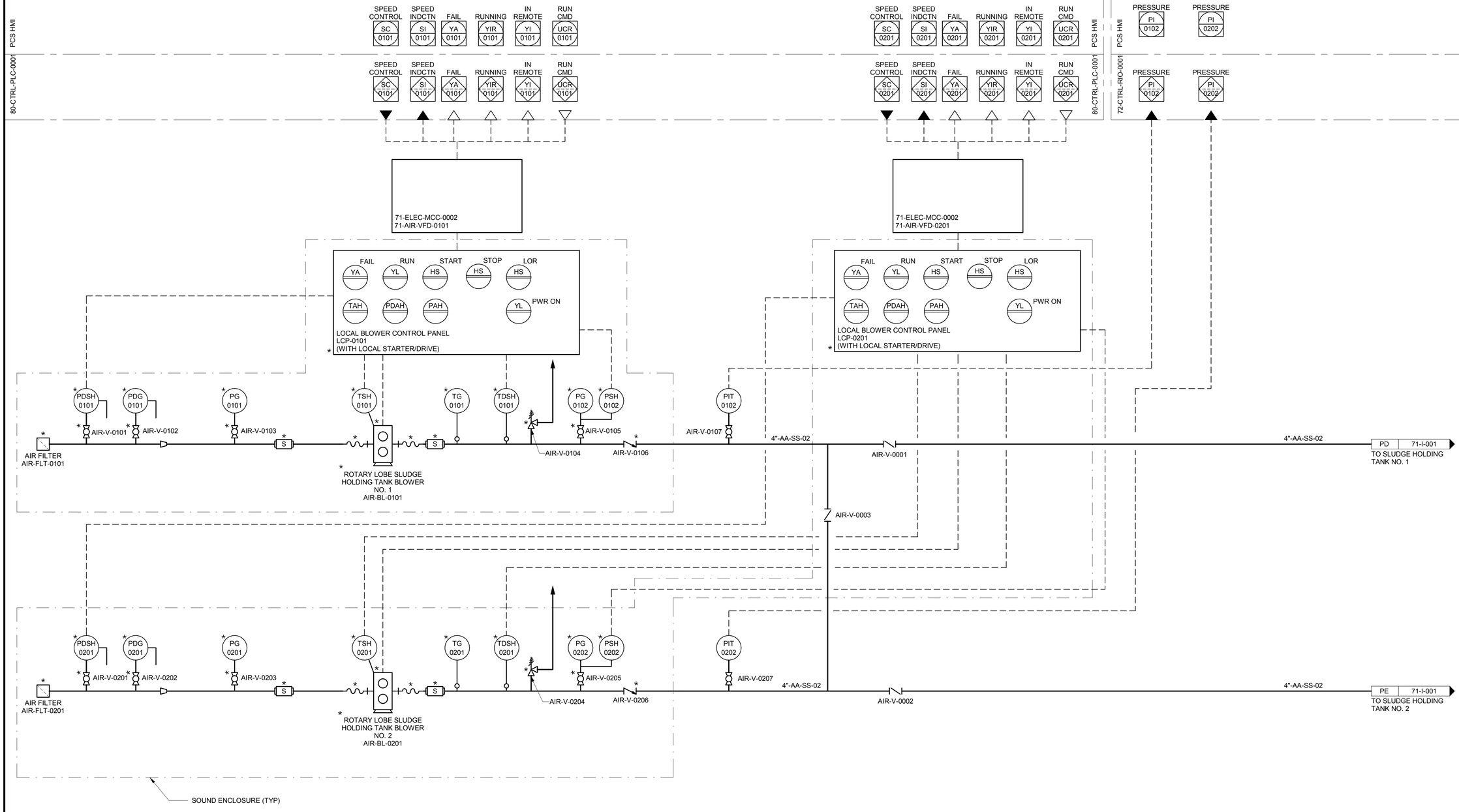

NOTES:
1. SEE LEGEND ON DRAWINGS 00-I-001, 00-I-002 AND 00-I-003.
2. AREA CODE IS 71 UNLESS OTHERWISE NOTED. SYSTEM CODE IS AIR UNLESS OTHERWISE INDICATED.
3. LOCAL CONTROL DEVICES SUCH AS INDICATING LIGHTS AND SWITCHES, LOCATED ON MCC'S OR AT DRIVEN EQUIPMENT, MAY NOT BE SHOWN ON THIS P&ID.

90% SUBMITTAL - NOT FOR CONSTRUCTION

NO.	BY	CHK	APP'D	DATE	REVISIONS AND RECORD OF USE
B	BLB	TAH	EVB	7/30/2019	60% SUBMITTAL
A	BLB	TAH	EVB	3/5/2019	30% SUBMITTAL

REGISTERED PROFESSIONAL ENGINEER
BRIAN L. BUTLER
No. E 16569
ELECTRICAL
STATE OF CALIFORNIA

BLACK & VEATCH
JOINT VENTURE
BLACK & VEATCH
FILANC

CITY OF MORRO BAY
MORRO BAY WATER
RECLAMATION FACILITY (WRF)

RESIDUALS AREA - SLUDGE & SAFE SETTLE TANKS
P&ID
SLUDGE HOLDING TANK BLOWERS

DESIGNED: BLB, KEZ
DETAILED: PVR
CHECKED: TAH
APPROVED:
DATE:

0 1/2 1
IF THIS BAR DOES NOT MEASURE 1" THEN DRAWING IS NOT TO FULL SCALE

PROJECT NO.
400530

71-I-003
SHEET
OF

PLOTTED: 3/17/2020 5:04:10 PM
D400530

PCS HMI

*72-DWT-PLC-0001

IN REMOTE YI 0201 | RUNNING YIR 0201 | FAIL YA 0201 | RUN CMD UCR 0201 | SPEED FEEDBACK SI 0201 | SPEED SETPT SC 0201

IN REMOTE YI 0101 | RUNNING YIR 0101 | FAIL YA 0101 | RUN CMD UCR 0101 | SPEED FEEDBACK SI 0101 | SPEED SETPT SC 0101

FLOW FI 0001

HH 34-I-001 FROM RECYCLED WATER PUMPS — 2"-PRW-PVC-02 — TO DEWATERING FACILITY HOSE BIBBS

A, B — PRW CONNECTIONS ON THIS SHEET

PC 71-I-001 FROM SLUDGE HOLDING TANKS — 4"-AWS-DIP — DWT-V-0004

DWT-V-0008

PB 71-I-002 FROM SAFE SETTLE — 4"-DRN-DIP

480V

*72-DWT-LCP-0101

*PSL 0101 — 0103

*FSL 0101 — S — A — DWT-V-0109

*TSH 0101 — DWT-RD-0101 — RUPTURE DISC

*DWT-V-0105 — 1"-DWT-DIP

*DWT-V-0104

*PSH 0102

*PG 0102

6"-AWS-DIP

DWT-V-0101

DWT-V-0102

*DEWATERING SLUDGE FEED PUMP NO.1 DWT-P-0101

0106 — DWT-V-0107

DWT-V-0108

*FIT 0001 — 24V

*FE 0001

6"-AWS-DIP — DWT-V-0007 — DWT-V-0003 — 2"-DWT-DIP — D

M 6"

6"-AWS-DIP — QA 72-I-002 — TO BELT FILTER PRESS FEED

DWT-V-0005 — 2"-DWT-DIP — D

DWT-V-0002

480V

*72-DWT-LCP-0201

*PSL 0201 — 0203

*FSL 0201 — S — B — DWT-V-0209

*TSH 0201 — DWT-RD-0201 — RUPTURE DISC

*DWT-V-0205 — 1"-DWT-DIP

*DWT-V-0204

*PSH 0202

*PG 0202

6"-AWS-DIP

DWT-V-0201

DWT-V-0202

*DEWATERING SLUDGE FEED PUMP NO.2 DWT-P-0201

0206 — DWT-V-0207

DWT-V-0208

6"-WWS-DIP — 6"-WWS-PVC-02 — QB 22-I-001 — TO SAFE BOX

PF 71-I-001 WAS FROM MBR — 3"-WAS-DIP

NOTES:
1. SEE LEGEND ON DRAWINGS 00-I-001, 00-I-002 AND 00-I-003.
2. AREA CODE IS 72 UNLESS OTHERWISE NOTED. SYSTEM CODE IS DWT UNLESS OTHERWISE INDICATED.
3. LOCAL CONTROL DEVICES SUCH AS INDICATING LIGHTS AND SWITCHES, LOCATED ON MCC'S OR AT DRIVEN EQUIPMENT, MAY NOT BE SHOWN ON THIS P&ID.

* ITEM FURNISHED BY DEWATERING SYSTEM SUPPLIER

90% SUBMITTAL - NOT FOR CONSTRUCTION

NO.	BY	CHK	APP'D	DATE	REVISIONS AND RECORD OF USE
B	BLB	TAH	EVB	7/30/2019	60% SUBMITTAL
A	BLB	TAH	EVB	3/5/2019	30% SUBMITTAL

REGISTERED PROFESSIONAL ENGINEER — BRIAN L. BUTLER — No. E 16569 — ELECTRICAL — STATE OF CALIFORNIA

BLACK & VEATCH JOINT VENTURE — BLACK & VEATCH — FILANC

CITY OF MORRO BAY
MORRO BAY WATER RECLAMATION FACILITY (WRF)

RESIDUALS AREA - DEWATERING SYSTEM P&ID
DEWATERING SLUDGE FEED PUMPS

DESIGNED: BLB, KEZ
DETAILED: PVR
CHECKED: TAH
APPROVED:
DATE:

0 1/2 1
IF THIS BAR DOES NOT MEASURE 1" THEN DRAWING IS NOT TO FULL SCALE

PROJECT NO. 400530

72-I-001
SHEET OF

PLOTTED: 3/17/2020 5:04:02 PM
D400530

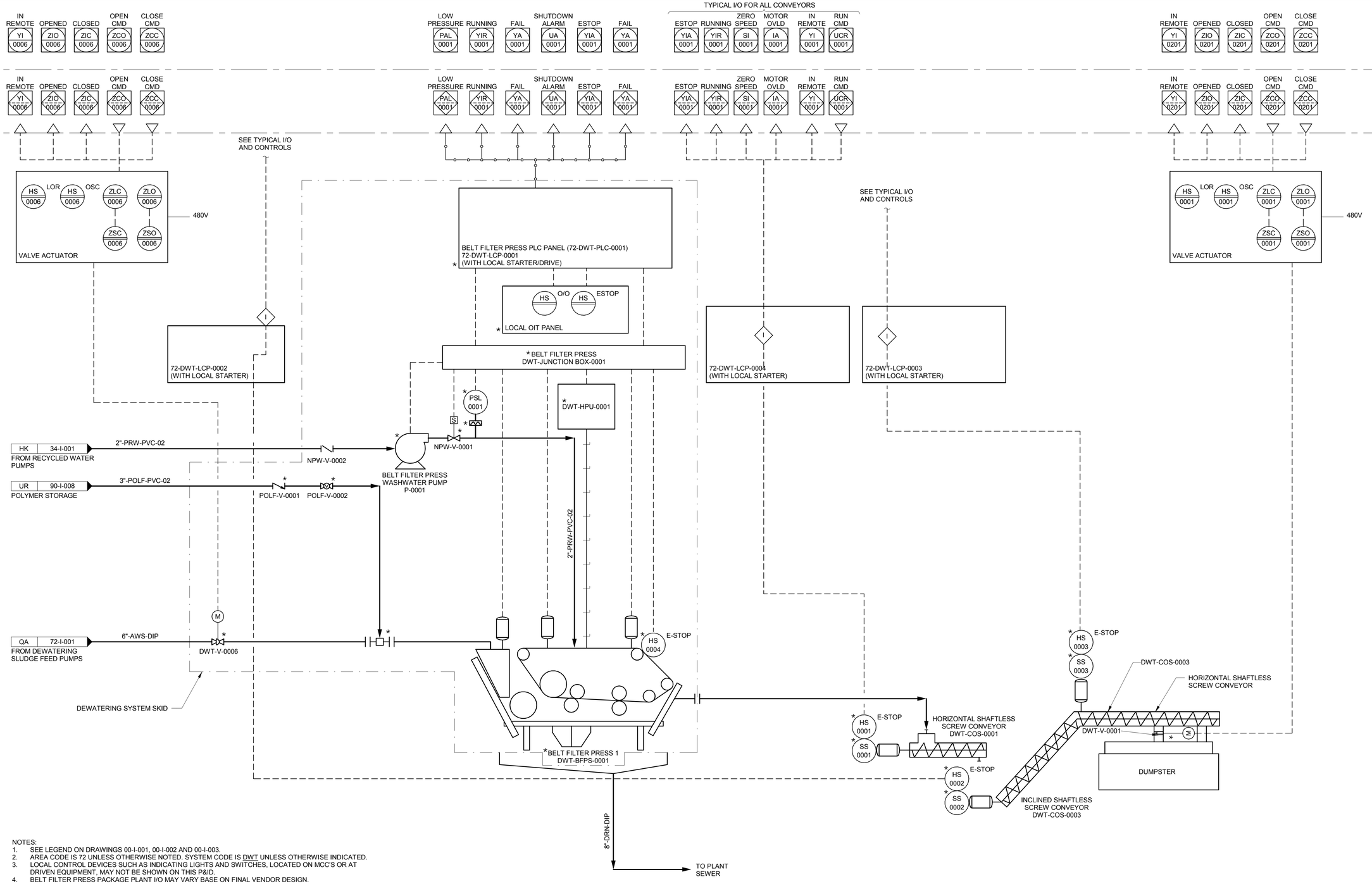

NOTES:
1. SEE LEGEND ON DRAWINGS 00-I-001, 00-I-002 AND 00-I-003.
2. AREA CODE IS 72 UNLESS OTHERWISE NOTED. SYSTEM CODE IS DWT UNLESS OTHERWISE INDICATED.
3. LOCAL CONTROL DEVICES SUCH AS INDICATING LIGHTS AND SWITCHES, LOCATED ON MCC'S OR AT DRIVEN EQUIPMENT, MAY NOT BE SHOWN ON THIS P&ID.
4. BELT FILTER PRESS PACKAGE PLANT I/O MAY VARY BASE ON FINAL VENDOR DESIGN.

* ITEM FURNISHED BY DEWATERING SYSTEM SUPPLIER

90% SUBMITTAL - NOT FOR CONSTRUCTION

NO.	BY	CHK	APP	DATE	REVISIONS AND RECORD OF USE
B	BLB	TAH	EVB	7/30/2019	60% SUBMITTAL
A	BLB	TAH	EVB	3/5/2019	30% SUBMITTAL

REGISTERED PROFESSIONAL ENGINEER
BRIAN L. BUTLER
No. E 16569
ELECTRICAL
STATE OF CALIFORNIA

BLACK & VEATCH
JOINT VENTURE
BLACK & VEATCH
FILANC

CITY OF MORRO BAY
MORRO BAY WATER RECLAMATION FACILITY (WRF)

RESIDUALS AREA - DEWATERING SYSTEM
P&ID
BELT FILTER PRESS

DESIGNED: BLB, KEZ
DETAILED: PVR
CHECKED: TAH
APPROVED:
DATE:

0 1/2 1
IF THIS BAR DOES NOT MEASURE 1" THEN DRAWING IS NOT TO FULL SCALE

PROJECT NO. 400530

72-I-002
SHEET OF

PLOTTED: 3/17/2020 5:58:38 PM
D400530

TYPICAL I/O FOR 0001, 0002, 0003, 0004, 0005, 0006, 0011, 0014 VALVE

PCS HMI

72-CTRL-RIO-0001

IN REMOTE YI 0001 | RUNNING YIR 0001 | FAIL YA 0001 | START CMD UCS 0001 | STOP CMD UCS 0001 | LEVEL LI 0001 | HIGH FLOW FAH 0001 | HIGH LEVEL LAH 0001 | VIBRATION VI 0001 | pH AI 0001

IN REMOTE YI 0001 | RUNNING YIR 0001 | FAIL YA 0001 | HI PRESSURE PAH 0003

START CMD UCS 0002 | STOP CMD UCS 0002 | IN REMOTE YI 0002 | RUNNING YIR 0002 | FAIL YA 0002 | HI PRESSURE PAH 0004

FLOW FI 0001 | PRESSURE PI 0001 | PRESSURE PI 0002 | FLOW FI 0002 | FLOW FI 0003

IN REMOTE YI 0007 | OPENED ZIO 0007 | CLOSED ZIC 0007 | OPEN CMD ZCO 0007 | CLOSE CMD ZCC 0007

CONTROL PANEL (73-FSW-PLC-0001)
73-FSW-LCP-0001
(WITH LOCAL STARTER/DRIVE)

VALVE ACTUATOR — HS 0002 | LOR | HS 0002 | OSC | ZLC 0002 | ZLO 0002 | ZSC 0002 | ZSO 0002

VALVE ACTUATOR — HS 0007 | LOR | HS 0007 | OSC | ZLC 0007 | ZLO 0007 | ZSC 0007 | ZSO 0007

480V

24V — FIT 0001 — FE 0001 — FOW-V-001

24"-FOW-DIP — M 14" — 14"-FOW-DIP — 20"-FOW-DIP — A/G — B/G — 20"-FOW-HDPE

RA | 64-I-001
TO OUTFALL PUMP STATION

EFFLUENT CHAMBER

SCUM BOX

M — SCUM VALVE — FSW-V-0007

8"-FSCM-DIP

6"-FSW-DIP — FSW-V-0002

SEE TYPICAL VALVE ACTUATOR AND I/O

6"-FBW-DIP — FSW-V-0003

SEE TYPICAL VALVE ACTUATOR AND I/O

6"-FBW-DIP — FSW-V-0004

SEE TYPICAL VALVE ACTUATOR AND I/O

6"-FBW-DIP — FSW-V-0005

SEE TYPICAL VALVE ACTUATOR AND I/O

6"-FBW-DIP — FSW-V-0006

6"-FSW-DIP

PIT 0001 — 4"-FSW-DIP — FSW-V-0009 — FILTER SOLIDS WASTE PUMP FSW-P-0001 — 4"-FSW-DIP

PSH 0003 | PG 0003 — FIT 0002 — FE 0002 — 24V — M 6" — FSW-V-0010 — 6"-FSW-DIP — FSW-V-0011

SEE TYPICAL VALVE ACTUATOR AND I/O — DISCHARGE VALVE

A\G — B\G

PIT 0002 — 6"-FBW-DIP — FSW-V-0012 — 4"-FBW-DIP — FILTER BACKWASH WASTE PUMP FSW-P-0002 — 4"-FBW-DIP

PSH 0004 | PG 0004 — FIT 0003 — FE 0003 — 24V — M 6" — FSW-V-0012

2"-FBW-PVC-02 — FSW-V-0013 — TO PLANT DRAIN

SEE TYPICAL VALVE ACTUATOR AND I/O — DISCHARGE VALVE — A\G — B\G — 6"-FBW-PVC-02

6"-FBW-DIP — FSW-V-0014

RB | 71-I-001
TO SLUDGE HOLDING TANK

RECIRCULATION VALVE

LSH 0001 — pH — AIT 0001 — AE 0001 — 24V

FS 0001

VIT 0001

LIT 0001 — LE 0001 — 24V

* DISK FILTER NO. 1
73-FSW-FLT-0001
FSW

24"-FIW-DIP — M — FSW-V-0001

B/G — A/G

PA | 71-I-002
FROM SAFE SETTLE

20"-FIW-HDPE — 20"-FIW-DIP — 6"-FIW-DIP — FSW-V-0008

HI | 34-I-001
FROM RECYCLED WATER PUMPS

2"-PRW-PVC-02 — TO SAFE FILTER SYSTEM HOSE BIBBS

6"-DRN-DIP

8"-DRN-DIP — 8"-DRN-PVC — TO PLANT SEWER

NOTES:

1. SEE LEGEND AND ABBREVIATIONS ON DRAWINGS 00-I-001, 00-I-002 AND 00-I-003.
2. AREA CODE IS 73 UNLESS OTHERWISE NOTED. SYSTEM CODE IS FSW UNLESS OTHERWISE NOTED.
3. LOCAL CONTROL DEVICES SUCH AS INDICATING LIGHTS AND SWITCHES, LOCATED ON MCCs OR AT DRIVEN EQUIPMENT, MAY NOT BE SHOWN ON THIS P&ID.

* ITEM SUPPLYED BY SAFE FILTER SUPPLIER

90% SUBMITTAL - NOT FOR CONSTRUCTION

NO.	BY	CHK	APP	DATE	REVISIONS AND RECORD OF USE
B	BLB	TAH	EVB	7/30/2019	60% SUBMITTAL
A	BLB	TAH	EVB	3/5/2019	30% SUBMITTAL

REGISTERED PROFESSIONAL ENGINEER — BRIAN L. BUTLER — No. E 16569 — ELECTRICAL — STATE OF CALIFORNIA

BLACK & VEACH

JOINT VENTURE

FILANC

BLACK & VEATCH

CITY OF MORRO BAY
MORRO BAY WATER
RECLAMATION FACILITY (WRF)

RESIDUALS AREA - SAFE FILTER SYSTEM
P&ID
SAFE SYSTEM

DESIGNED: BLB, KEZ
DETAILED: PVR
CHECKED: TAH
APPROVED:
DATE:

0 1/2 1
IF THIS BAR DOES NOT MEASURE 1" THEN DRAWING IS NOT TO FULL SCALE

PROJECT NO.
400530

73-I-001
SHEET
OF

PLOTTED: 3/17/2020 5:58:28 PM
D400530

PCS HMI

80-CTRL-PLC-0001

VOLTAGE	CURRENT	POWER FACTOR	KW	GEN FAIL	GEN. RUNNING	HI-HI LEVEL	LOW LEVEL	LEAK DETECTED	GEN BRKR OPEN	GEN BRKR CLOSED	BATTERY FAIL	ATS FAIL	GEN. POWER	NORMAL POWER
EI 0001	II 0001	JI 0001	JI 0001	YA 0001	YIR 0001	LAHH 0001	LSL 0001	MAH 0002	YA 0001	YA 0001	YA 0001	YA 0001	YI 0001	UA 0001

PCS HMI

80-CTRL-PLC-0001

VOLTAGE EI 0001 | CURRENT II 0001 | POWER FACTOR JI 0001 | KW JI 0001 | GEN FAIL YA 0001 | GEN. RUNNING YIR 0001 | HI-HI LEVEL LAHH 0001 | LOW LEVEL LSL 0001 | LEAK DETECTED MAH 0002 | GEN BRKR OPEN YA 0001 | GEN BRKR CLOSED YA 0001 | BATTERY FAIL YA 0001 | ATS FAIL YA 0001 | GEN. POWER YI 0001 | NORMAL POWER UA 0001

SECONDARY TANK VENT

SECONDARY TANK EMERGENCY VENT

PRIMARY TANK VENT

PRIMARY TANK EMERGENCY VENT

TCP/IP

HORN WITH SILENCE PUSH BUTTON

AAX 0001

HMS 0001

HS 0001 E-STOP ES REMOTE SHUTDOWN SWITCH

TRANSFER SWITCH 81-GEN-ATS-0001

LI 0001

120V

LOCAL CONTROL PANEL 80-GEN-LCP-0001

SEE SPEC 26 32 13 FOR CONTROL PANEL DETAILS AND INTERLOCK LOGIC

BATTERY CHARGER

ENGINE GENERATOR 81-GEN-GEN-0001

ENGINE SUPPLY

RETURN FROM ENGINE

FILTER SEPARATOR

FUEL OIL COOLER (IF REQUIRED)

GEN-DF

GEN-DF

SECONDARY CONTAINMENT TESTING WITH CAP

ELECTRICALLY OPERATED SHUT OFF VALVE

FILL QUICK COUPLING

FUEL FILL ACCESS DOOR

PUMP OUT WITH CAP

SPILL CONTAINMENT BOX

SPARE CONNECTION WITH BLIND FLANGE

SPARE CONNECTION WITH CAPS

FUE-V-0003

FUE-V-0002

FUE-V-0001

LIT 0001

TSH 0001

TSL 0001

120V

LSHH 0001

LSH 0001

LSL 0001

SUB-BASE FUEL STORAGE TANK 81-GEN-TNK-0001

LSH 0002

SECONDARY CONTAINMENT TANK

TANK ACCESS WITH BLIND FLANGE

PRIMARY FUEL TANK

TANK HEATER

FOOT VALVE

LEAK DETECTION

ENGINE - GENERATOR ENCLOSURE

NOTES:

1. SEE LEGEND AND ABBREVIATIONS ON DRAWING 00-I-001, 00-I-002 AND 00-I-003.
2. AREA CODE IS 81 UNLESS OTHERWISE NOTED. SYSTEM CODE IS FQ UNLESS OTHERWISE NOTED.
3. LOCAL CONTROL DEVICES SUCH AS INDICATING LIGHTS AND SWITCHES, LOCATED IN MCC's OR AT DRIVEN EQUIPMENT MAY NOT INDICATED ON THIS P&ID.

90% SUBMITTAL - NOT FOR CONSTRUCTION

NO.	BY	CHK	APP	DATE	REVISIONS AND RECORD OF USE
A	BLB	TAH	EVB	7/30/2019	60% SUBMITTAL

REGISTERED PROFESSIONAL ENGINEER
BRIAN L. BUTLER
No. E 16569
ELECTRICAL
STATE OF CALIFORNIA

BLACK & VEATCH

JOINT VENTURE

BLACK & VEATCH

FILANC

CITY OF MORRO BAY
MORRO BAY WATER RECLAMATION FACILITY (WRF)

MISCELLANEOUS - GENERATOR P&ID
GENERATOR SYSTEM

DESIGNED: ME, DAV, JL, BLB
DETAILED: PVR
CHECKED: TAH
APPROVED:
DATE:

0 1/2 1
IF THIS BAR DOES NOT MEASURE 1" THEN DRAWING IS NOT TO FULL SCALE

PROJECT NO. 400530

81-I-001
SHEET OF

PLOTTED: 3/17/2020 5:57:01 PM
D400530

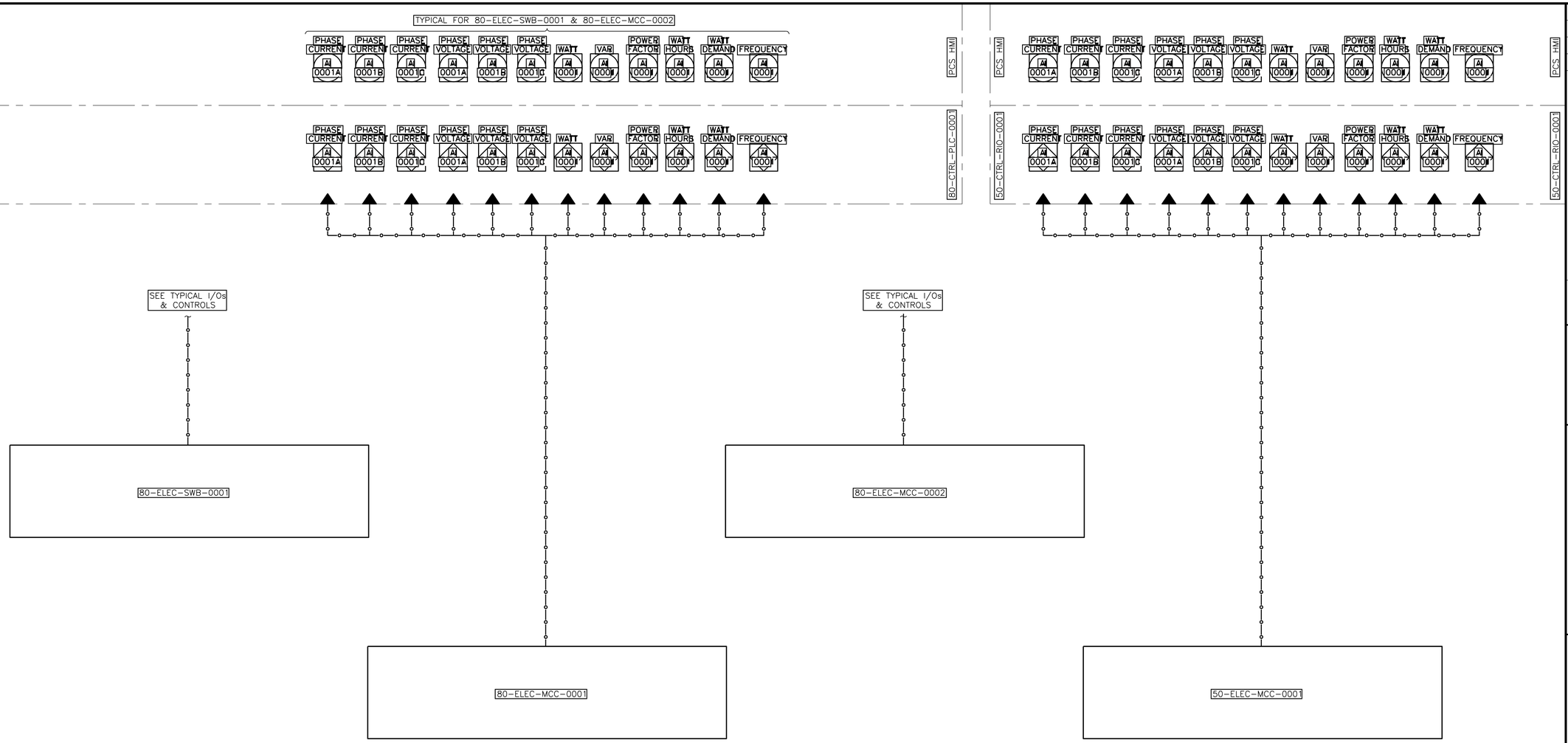

90% SUBMITTAL - NOT FOR CONSTRUCTION

NO.	BY	CHK	APP	DATE	REVISIONS AND RECORD OF USE

REGISTERED PROFESSIONAL ENGINEER
BRIAN L. BUTLER
No. E 16569
ELECTRICAL
STATE OF CALIFORNIA

JOINT VENTURE
BLACK & VEATCH
FILANC

CITY OF MORRO BAY
FILANC B&V DB PROP
MORRO BAY WRF

MISCELLANEOUS - ELECTERICAL
P&ID
SWITCHBOARD & MCCS

DESIGNED: BLB
DETAILED: PVR
CHECKED: TAH
APPROVED:
DATE:

0 1/2 1
IF THIS BAR DOES NOT MEASURE 1" THEN DRAWING IS NOT TO FULL SCALE

PROJECT NO.
400530

81-I-002
SHEET
XX OF XX

GAM78494, 12/19/2019 3:45:56 PM
GAM78494, 12/19/2019 3:46:40 PM
GAM78494

D81203

FD81230

PCS HMI

90-CTRL-RIO-001

LEVEL LI 0001

LEVEL HIGH LAH 0002 | SPEED FEEDBACK SI 0101 | SPEED SETPT SC 0101 | RUNNING YIR 0101 | FAIL YA 0101 | IN REMOTE YI 0101 | RUN CMD UCR 0101 | HI PRESSURE PAH 0101 | LEAK DETECTED MAH 0101

SPEED FEEDBACK SI 0201 | SPEED SETPT SC 0201 | RUNNING YIR 0201 | FAIL YA 0201 | IN REMOTE YI 0201 | RUN CMD UCR 0201 | HI PRESSURE PAH 0201 | LEAK DETECTED MAH 0201

SPEED FEEDBACK SI 0301 | SPEED SETPT SC 0301 | RUNNING YIR 0301 | FAIL YA 0301 | IN REMOTE YI 0301 | RUN CMD UCR 0301 | HI PRESSURE PAH 0301 | LEAK DETECTED MAH 0301

EYEWASH FLOW FAH 0001

480V

SODIUM HYPOCHLORITE UNLOADING PANEL
NOTE 5

LAH 0001 | AAX 0001 HORN | HS 0001 SILENCE | LI 0001 | LSH 0001

90-NOCL-LCP-0101 (INTEGRAL TO PUMP)

90-NOCL-LCP-0201 (INTEGRAL TO PUMP)

90-NOCL-LCP-0301 (INTEGRAL TO PUMP)

120V

1"-PW-CPVC-02

FROM POTABLE WATER SUPPLY

FSH 0001

90-NOCL-EMEW-0001

2"-NACL-CPVC-02 | 1/2"-NACL-TEFL-01 | PLANT PIPING | YARD PIPING | UA 64-I-001 TO OCEAN OUTFALL PIPING

2"-NACL-CPVC-02 | 1/2"-NACL-TEFL-01 | PLANT PIPING | YARD PIPING | UB 51-I-006 TO RO CONCENTRATE PIPING

2"-NACL-CPVC-02 | 1/2"-NACL-TEFL-01 | PLANT PIPING | YARD PIPING | UC 33-I-001 TO RO FEED PIPING

2"-PRW-PVC-02 | HJ 34-I-001 FROM RECYCLED WATER PUMPS | TO CHEMICAL FACILITY HOSE BIBBS

2"-NACL-CPVC-02

SODIUM HYPOCHLORITE STORAGE TANK NOCL-T-0001

3"-NACL-CPVC-02

NOCL-V-0001

LIT 0001

NOCL-V-0008

NOCL-V-0004

NOCL-V-0005

NOCL-V-0006

2"-NACL-CPVC-02

LSH 0002

NOCL-V-0007

1"-NACL-CPVC-02

PG 0102 | NOCL-V-0104 | NOCL-V-0105 | NOCL-V-0103 | PG 0101 | PSH 0101 | MSH 0101 | 1/2"-NOCL-CPVC-02 | 1"-NACL-CPVC-02 | NOCL-V-0102 | NOCL-V-0101

SODIUM HYPOCHLORITE METERING PUMP NO. 1 NOCL-P-0101

PG 0202 | NOCL-V-0204 | NOCL-V-0205 | NOCL-V-0203 | PG 0201 | PSH 0201 | MSH 0201 | 1/2"-NOCL-CPVC-02 | 1"-NACL-CPVC-02 | NOCL-V-0202 | NOCL-V-0201

SODIUM HYPOCHLORITE METERING PUMP NO. 2 NOCL-P-0201

PG 0302 | NOCL-V-0304 | NOCL-V-0305 | NOCL-V-0303 | PG 0301 | PSH 0301 | MSH 0301 | 1/2"-NOCL-CPVC-02 | 1"-NACL-CPVC-02 | NOCL-V-0302 | NOCL-V-0301

SODIUM HYPOCHLORITE METERING PUMP NO. 3 NOCL-P-0301

2"-NACL-CPVC-02 | UD 90-I-002 TO METERING PUMPS

NOTE 4

NOTES:

1. SEE LEGEND AND ABBREVIATIONS ON DRAWING 00-I-001, 00-I-002 AND 00-I-003.
2. AREA CODE IS 90 UNLESS OTHERWISE NOTED. SYSTEM CODE IS NOCL UNLESS OTHERWISE NOTED.
3. LOCAL CONTROL DEVICES SUCH AS INDICATING LIGHTS AND SWITCHES, LOCATED IN MCC's OR AT DRIVEN EQUIPMENT MAY NOT INDICATED ON THIS P&ID.
4. DETAILS OF FEEDER / BLENDER SKID TO BE CONFIRMED WITH SELECTED VENDOR EQUIPMENT.
5. LOCATE LOCAL LEVEL INDICATION SUCH THAT IT CAN BE VIEWED FROM THE TRUCK UNLOADING CONNECTION.

90% SUBMITTAL - NOT FOR CONSTRUCTION

NO.	BY	CHK	APP'D
B	BLB	TAH	EVB
A	BLB	TAH	EVB

REVISIONS AND RECORD OF USE

60% SUBMITTAL 7/30/2019
30% SUBMITTAL 3/5/2019

DATE

REGISTERED PROFESSIONAL ENGINEER BRIAN L. BUTLER No. E 16569 ELECTRICAL STATE OF CALIFORNIA

BLACK & VEATCH JOINT VENTURE

BLACK & VEATCH

FILANC

CITY OF MORRO BAY
MORRO BAY WATER RECLAMATION FACILITY (WRF)

CHEMICALS - CHEMICAL FACILITY P&ID

SODIUM HYPOCHLORITE STORAGE & FEED 1

DESIGNED: BLB, ADV
DETAILED: PVR
CHECKED: TAH
APPROVED:
DATE:

0 1/2 1
IF THIS BAR DOES NOT MEASURE 1" THEN DRAWING IS NOT TO FULL SCALE

PROJECT NO. 400530

90-I-001
SHEET
OF

PLOTTED: 3/17/2020 5:58:17 PM
D400530

PCS HMI

90-CTRL-RIO-001

SPEED FEEDBACK	SPEED SETPT	RUNNING	FAIL	IN REMOTE	RUN CMD	HI PRESSURE	LEAK DETECTED
SI 0401	SC 0401	YIR 0401	YA 0401	YI 0401	UCR 0401	PAH 0401	MAH 0401
SI 0501	SC 0501	YIR 0501	YA 0501	YI 0501	UCR 0501	PAH 0501	MAH 0501
SI 0601	SC 0601	YIR 0601	YA 0601	YI 0601	UCR 0601	PAH 0601	MAH 0601
SI 0701	SC 0701	YIR 0701	YA 0701	YI 0701	UCR 0701	PAH 0701	MAH 0701

90-NOCL-LCP-0401 (COMMENTS) (INTEGRAL TO PUMP)

90-NOCL-LCP-0501 (COMMENTS) (INTEGRAL TO PUMP)

90-NOCL-LCP-0601 (COMMENTS) (INTEGRAL TO PUMP)

90-NOCL-LCP-0701 (COMMENTS) (INTEGRAL TO PUMP)

UD 90-I-001 — 2"-NACL-CPVC-02 — FROM SODIUM HYPOCHLORITE STORAGE TANK

2"-NACL-CPVC-02

1/2"-NOCL-CPVC-02

1"-NACL-CPVC-02

	PG	NOCL-V-	PSH	MSH	NOCL-P-
SODIUM HYPOCHLORITE METERING PUMP NO. 4	PG 0402	0404 / 0405 / 0403 / 0402 / 0401	PSH 0401	MSH 0401	0401
SODIUM HYPOCHLORITE METERING PUMP NO. 5	PG 0502	0504 / 0505 / 0503 / 0502 / 0501	PSH 0501	MSH 0501	0501
SODIUM HYPOCHLORITE METERING PUMP NO. 6	PG 0602	0604 / 0605 / 0603 / 0602 / 0601	PSH 0601	MSH 0601	0601
SODIUM HYPOCHLORITE METERING PUMP NO. 7	PG 0702	0704 / 0705 / 0703 / 0702 / 0701	PSH 0701	MSH 0701	0701

NOTE 4

2"-NACL-CPVC-02 — 1/2"-NACL-TEFL-01 — PLANT PIPING / YARD PIPING — UE 52-I-001 — TO UV / AOP SYSTEM

2"-NACL-CPVC-02 — 1/2"-NACL-TEFL-01 — PLANT PIPING / YARD PIPING — UF 62-I-001 — DISINFECTION OF RO PRODUCT WATER

2"-NACL-CPVC-02 — 3/4"-NACL-TEFL-01 — PLANT PIPING / YARD PIPING — UG 32-I-001 — TO MBR BACKWASH / CIP

2"-NACL-CPVC-02 — 1/2"-NACL-TEFL-01 — PLANT PIPING / YARD PIPING — UH 34-I-001 — TO ONSITE RECYCLED WATER PUMPS

NOTES:

1. SEE LEGEND AND ABBREVIATIONS ON DRAWING 00-I-001, 00-I-002 AND 00-I-003.
2. AREA CODE IS 90 UNLESS OTHERWISE NOTED. SYSTEM CODE IS NOCL UNLESS OTHERWISE NOTED.
3. LOCAL CONTROL DEVICES SUCH AS INDICATING LIGHTS AND SWITCHES, LOCATED IN MCC's OR AT DRIVEN EQUIPMENT MAY NOT INDICATED ON THIS P&ID.
4. DETAILS OF FEEDER / BLENDER SKID TO BE CONFIRMED WITH SELECTED VENDOR EQUIPMENT.

90% SUBMITTAL - NOT FOR CONSTRUCTION

NO.	BY	CHK	APP
B	BLB	TAH	EVB
A	BLB	TAH	EVB

REVISIONS AND RECORD OF USE

DATE	
7/30/2019	60% SUBMITTAL
3/5/2019	30% SUBMITTAL

REGISTERED PROFESSIONAL ENGINEER — BRIAN L. BUTLER — No. E 16569 — ELECTRICAL — STATE OF CALIFORNIA

BLACK & VEATCH

JOINT VENTURE

BLACK & VEATCH

FILANC

CITY OF MORRO BAY
MORRO BAY WATER RECLAMATION FACILITY (WRF)

CHEMICALS - CHEMICAL FACILITY P&ID

SODIUM HYPOCHLORITE STORAGE & FEED 2

DESIGNED: BLB, ADV
DETAILED: PVR
CHECKED: TAH
APPROVED:
DATE:

0 1/2 1

IF THIS BAR DOES NOT MEASURE 1" THEN DRAWING IS NOT TO FULL SCALE

PROJECT NO. 400530

90-I-002
SHEET
OF

PLOTTED: 3/17/2020 5:58:39 PM

D400530

PCS HMI

90-CTRL-RIO-0001

LEVEL	LEVEL HIGH	SPEED FEEDBACK	SPEED SETPT	RUNNING	FAIL	IN REMOTE	RUN CMD	HI PRESSURE	LEAK DETECTED
LI 0001	LAH 0002	SI 0101	SC 0101	YIR 0101	YA 0101	YI 0101	UCR 0101	PAH 0101	MAH 0101
		SI 0201	SC 0201	YIR 0201	YA 0201	YI 0201	UCR 0201	PAH 0201	MAH 0201
		SI 0301	SC 0301	YIR 0301	YA 0301	YI 0301	UCR 0301	PAH 0301	MAH 0301

EYEWASH FLOW: FAH 0001

SODIUM HYDROXIDE UNLOADING PANEL
NOTE 5

LAH, AAX, HORN, I, HS, SILENCE, LI, LSH

480V

90-NAOH-LCP-0101 (INTEGRAL TO PUMP)

90-NAOH-LCP-0201 (INTEGRAL TO PUMP)

90-NAOH-LCP-0301 (INTEGRAL TO PUMP)

1"-PW-CPVC-02

120V

FROM POTABLE WATER SUPPLY

FSH 0001

90-NAOH-EMEW-0001

2"-NAOH-CPVC-02

3/4"-NAOH-PE-06 — UI 51-I-009 — TO RO CIP/NEUTRALIZATION TANK

1/2"-NAOH-PE-06 — UJ 62-I-001 — TO PRODUCT WATER TANK

1/2"-NAOH-PE-06 — UK 31-I-001 — SODIUM HYDROXIDE TO FINE SCREEN EFFLUENT

PLANT PIPING | YARD PIPING

2"-NAOH-CS-02

SODIUM HYDROXIDE STORAGE TANK NAOH-T-0001

3"-NAOH-CS-03

1"-NAOH-CS-02

1/2"-NAOH-CS-02

PG 0102, PG 0202, PG 0302

NAOH-V-0104, NAOH-V-0105, NAOH-V-0103, NAOH-V-0204, NAOH-V-0205, NAOH-V-0203, NAOH-V-0304, NAOH-V-0305, NAOH-V-0303

PG 0101, PG 0201, PG 0301

PSH 0101, PSH 0201, PSH 0301

MSH 0101, MSH 0201, MSH 0301

NAOH-V-0102, NAOH-V-0202, NAOH-V-0302

NAOH-V-0101, NAOH-V-0201, NAOH-V-0301

NAOH-V-0001

3"-NAOH-CPVC-02

LIT 0001

NAOH-V-0008

NAOH-V-0004

NAOH-V-0005

NAOH-V-0006

NAOH-V-0007

1 1/2"-NAOH-CS-02

LSH 0002

SODIUM HYDROXIDE METERING PUMP NO. 1 NAOH-P-0101

SODIUM HYDROXIDE METERING PUMP NO. 2 NAOH-P-0201

SODIUM HYDROXIDE METERING PUMP NO. 3 NAOH-P-0301

NOTE 4

NOTES:

1. SEE LEGEND AND ABBREVIATIONS ON DRAWING 00-I-001, 00-I-002 AND 00-I-003.
2. AREA CODE IS 90 UNLESS OTHERWISE NOTED. SYSTEM CODE IS NAOH UNLESS OTHERWISE NOTED.
3. LOCAL CONTROL DEVICES SUCH AS INDICATING LIGHTS AND SWITCHES, LOCATED IN MCC'S OR AT DRIVEN EQUIPMENT MAY NOT INDICATED ON THIS P&ID.
4. DETAILS OF FEEDER / BLENDER SKID TO BE CONFIRMED WITH SELECTED VENDOR EQUIPMENT.
5. LOCATE LOCAL LEVEL INDICATION SUCH THAT IT CAN BE VIEWED FROM THE TRUCK UNLOADING CONNECTION.

90% SUBMITTAL - NOT FOR CONSTRUCTION

NO.	BY	CHK	APP'D	DATE	REVISIONS AND RECORD OF USE
B	BLB	TAH	EVB	7/30/2019	60% SUBMITTAL
A	BLB	TAH	EVB	3/5/2019	30% SUBMITTAL

REGISTERED PROFESSIONAL ENGINEER — BRIAN L. BUTLER — No. E 16569 — ELECTRICAL — STATE OF CALIFORNIA

BLACK & VEATCH

JOINT VENTURE

BLACK & VEATCH

FILANC

CITY OF MORRO BAY
MORRO BAY WATER RECLAMATION FACILITY (WRF)

CHEMICALS - CHEMICAL FACILITY
P&ID
SODIUM HYDROXIDE STORAGE & FEED

DESIGNED: BLB, ADV
DETAILED: PVR
CHECKED: TAH
APPROVED:
DATE:

0 1/2 1
IF THIS BAR DOES NOT MEASURE 1" THEN DRAWING IS NOT TO FULL SCALE

PROJECT NO. 400530

90-I-003
SHEET OF

PLOTTED: 3/17/2020 5:58:21 PM
D400530

PCS HMI

90-CTRL-RIO-0001

WEIGHT WI 0001

WEIGHT WI 0002

SPEED FEEDBACK SI 0001

SPEED SETPT SC 0001

RUNNING YIR 0001

FAIL YA 0001

IN REMOTE YI 0001

RUN CMD UCR 0001

HI PRESSURE PAH 0001

LEAK DETECTED MAH 0001

EYEWASH FLOW FAH 0001

90-NHS-LCP-0001
(INTEGRAL TO PUMP)

120V

1"-PW-CPVC-02

FROM POTABLE WATER SUPPLY

FSH 0001

90-NHS-EMEW-0001

SODIUM BISULFITE STORAGE TOTE

24V FROM PLC

WIT 0002

WE 0002

1"-NHS-CPVC-02

NHS-V-0002

SODIUM BISULFITE SECONDARY CONTAINMENT WITH INTEGRAL SCALE

2"-NHS-CPVC-02

1/2"-NHS-PE-06

PLANT PIPING

YARD PIPING

UL 65-I-001

DECHLORINATION TO OCEAN OUTFALL PIPING

1"-NHS-CPVC-02

PG 0002

NHS-V-0007

NHS-V-0008

NHS-V-0006

PG 0001

PSH 0001

MSH 0001

1/2"-NHS-CPVC-02

1"-NHS-CPVC-02

NHS-V-0005

NHS-V-0004

SODIUM BISULFITE STORAGE TOTE

24V FROM PLC

WIT 0001

WE 0001

1"-NHS-CPVC-02

NHS-V-0001

NHS-V-0003

SODIUM BISULFITE SECONDARY CONTAINMENT WITH INTEGRAL SCALE

SODIUM BISULFITE METERING PUMP NHS-P-0001

NOTE 4

NOTES:

1. SEE LEGEND AND ABBREVIATIONS ON DRAWING 00-I-001, 00-I-002 AND 00-I-003.
2. AREA CODE IS 90 UNLESS OTHERWISE NOTED. SYSTEM CODE IS NHS UNLESS OTHERWISE NOTED.
3. LOCAL CONTROL DEVICES SUCH AS INDICATING LIGHTS AND SWITCHES, LOCATED ON MCC'S OR AT DRIVEN EQUIPMENT, MAY NOT BE SHOWN ON THIS P&ID.
4. DETAILS OF FEEDER / BLENDER SKID TO BE CONFIRMED WITH SELECTED VENDOR EQUIPMENT.

90% SUBMITTAL - NOT FOR CONSTRUCTION

NO.	BY	CHK	APP'D	DATE	REVISIONS AND RECORD OF USE
B	BLB	TAH	EVB	7/30/2019	60% SUBMITTAL
A	BLB	TAH	EVB	3/5/2019	30% SUBMITTAL

REGISTERED PROFESSIONAL ENGINEER
BRIAN L. BUTLER
No. E 16569
ELECTRICAL
STATE OF CALIFORNIA

BLACK & VEATCH
JOINT VENTURE
BLACK & VEATCH
FILANC

CITY OF MORRO BAY
MORRO BAY WATER
RECLAMATION FACILITY (WRF)

CHEMICALS - CHEMICAL FACILITY
P&ID
SODIUM BISULFITE STORAGE & FEED

DESIGNED: BLB, ADV
DETAILED: PVR
CHECKED: TAH
APPROVED:
DATE:

0 1/2 1
IF THIS BAR DOES NOT MEASURE 1" THEN DRAWING IS NOT TO FULL SCALE

PROJECT NO. 400530

90-I-004
SHEET OF

PLOTTED: 3/17/2020 5:58:24 PM
D400530

PCS HMI

90-CTRL-RIO-0001

WEIGHT WI 0001

WEIGHT WI 0002

SPEED FEEDBACK SI 0001

SPEED SETPT SC 0001

RUNNING YIR 0001

FAIL YA 0001

IN REMOTE YI 0001

RUN CMD UCR 0001

HI PRESSURE PAH 0001

LEAK DETECTED MAH 0001

EYEWASH FLOW FAH 0001

FSH 0001

120V

1"-PW-CPVC-02

FROM POTABLE WATER SUPPLY

90-ANTI-EMEW-0001

90-ANTI-LCP-0001

(INTEGRAL TO PUMP)

ANTISCALANT STORAGE TOTE

24V FROM PLC

WIT 0002

WE 0002

ANTISCALANT SECONDARY CONTAINMENT WITH INTEGRAL SCALE

Q

ANTI-V-0008

2"-ANTI-CPVC-02

1/2"-ANTI-PE-06

PLANT PIPING

YARD PIPING

UM 51-I-001

ANTISCALANT TO COMMON RO HEADER

1"-ANTI-PVC-02

PG 0002

ANTI-V-0006

ANTI-V-0007

ANTI-V-0005

PG 0001

PSH 0001

MSH 0001

1"-ANTI-CPVC-02

1/2"-ATS-CPVC-02

1"-ATS-CPVC-02

ANTI-V-0004

ANTI-V-0003

ANTISCALANT STORAGE TOTE

24V FROM PLC

WIT 0001

WE 0001

ANTISCALANT SECONDARY CONTAINMENT WITH INTEGRAL SCALE

Q

ANTI-V-0001

1"-ANTI-CPVC-02

ANTI-V-0002

ANTISCALANT METERING PUMP ANTI-P-0001

NOTE 4

NOTES:

1. SEE LEGEND AND ABBREVIATIONS ON DRAWING 00-I-001, 00-I-002 AND 00-I-003.
2. AREA CODE IS 90 UNLESS OTHERWISE NOTED. SYSTEM CODE IS ANTI UNLESS OTHERWISE NOTED.
3. LOCAL CONTROL DEVICES SUCH AS INDICATING LIGHTS AND SWITCHES, LOCATED ON MCC's OR AT DRIVEN EQUIPMENT, MAY NOT BE SHOWN ON THIS P&ID.
4. DETAILS OF FEEDER / BLENDER SKID TO BE CONFIRMED WITH SELECTED VENDOR EQUIPMENT.

90% SUBMITTAL - NOT FOR CONSTRUCTION

NO.	BY	CHK	APP'D	DATE	REVISIONS AND RECORD OF USE
B	BLB	TAH	EVB	7/30/2019	60% SUBMITTAL
A	BLB	TAH	EVB	3/5/2019	30% SUBMITTAL

REGISTERED PROFESSIONAL ENGINEER BRIAN L. BUTLER No. E 16569 ELECTRICAL STATE OF CALIFORNIA

BLACK & VEATCH JOINT VENTURE BLACK & VEATCH FILANC

CITY OF MORRO BAY
MORRO BAY WATER RECLAMATION FACILITY (WRF)

CHEMICALS - CHEMICAL FACILITY P&ID
ANTISCALANT STORAGE & FEED

DESIGNED: BLB, ADV
DETAILED: PVR
CHECKED: TAH
APPROVED:
DATE:

0 1/2 1
IF THIS BAR DOES NOT MEASURE 1" THEN DRAWING IS NOT TO FULL SCALE

PROJECT NO. 400530

90-I-005
SHEET OF

PLOTTED: 3/17/2020 5:58:28 PM
D400530

PCS HMI

90-CTRL-RIO-0001

WEIGHT WI 0001

WEIGHT WI 0002

SPEED FEEDBACK SI 0101 | SPEED SETPT SC 0101 | RUNNING YIR 0101 | FAIL YA 0101 | IN REMOTE YI 0101 | RUN CMD UCR 0101 | HI PRESSURE PAH 0101 | LEAK DETECTED MAH 0101

SPEED FEEDBACK SI 0201 | SPEED SETPT SC 0201 | RUNNING YIR 0201 | FAIL YA 0201 | IN REMOTE YI 0201 | RUN CMD UCR 0201 | HI PRESSURE PAH 0201 | LEAK DETECTED MAH 0201

EYEWASH FLOW FAH 0001

90-CA-LCP-0101
(INTEGRAL TO PUMP)

90-CA-LCP-0201
(INTEGRAL TO PUMP)

120V

1"-PW-CPVC-02

FROM POTABLE WATER SUPPLY

FSH 0001

90-CA-EMEW-0001

2"-CA-CPVC-02

1/2"-CA-PE-06

UN 51-I-009
TO RO CIP / NEUTRALIZATION TANK

PLANT PIPING | YARD PIPING

2"-CA-CPVC-02

3/4"-CA-PE-06

UO 32-I-001
TO MBR BACKWASH / CIP

PLANT PIPING | YARD PIPING

CITRIC ACID STORAGE TOTE

24V FROM PLC

WIT 0002

WE 0002

CITRIC ACID SECONDARY CONTAINMENT WITH INTEGRAL SCALE

Q

CA-V-0002

2"-CA-PVC-02

1"-CA-PVC-02

PG 0102

CA-V-0104

CA-V-0105

CA-V-0103

PG 0101

PSH 0101

MSH 0101

1"-CA-PVC-02

CA-V-0102

CA-V-0101

1/2"-CA-CPVC-02

2"-CA-PVC-02

CA-V-0001

2"-CA-PVC-02

CA-V-0003

1"-CA-PVC-02

PG 0202

CA-V-0204

CA-V-0205

CA-V-0203

PG 0201

PSH 0201

MSH 0201

1"-CA-PVC-02

CA-V-0202

CA-V-0201

1/2"-CA-CPVC-02

NOTE 4

CITRIC ACID STORAGE TOTE

24V FROM PLC

WIT 0001

WE 0001

CITRIC ACID SECONDARY CONTAINMENT WITH INTEGRAL SCALE

NOTES:

1. SEE LEGEND AND ABBREVIATIONS ON DRAWING 00-I-001, 00-I-002 AND 00-I-003.
2. AREA CODE IS 90 UNLESS OTHERWISE NOTED. SYSTEM CODE IS CA UNLESS OTHERWISE NOTED.
3. LOCAL CONTROL DEVICES SUCH AS INDICATING LIGHTS AND SWITCHES, LOCATED ON MCC's OR AT DRIVEN EQUIPMENT, MAY NOT BE SHOWN ON THIS P&ID.
4. DETAILS OF FEEDER / BLENDER SKID TO BE CONFIRMED WITH SELECTED VENDOR EQUIPMENT.

90% SUBMITTAL - NOT FOR CONSTRUCTION

NO.	BY	CHK	APP'D
B	BLB	TAH	EVB
A	BLB	TAH	EVB

REVISIONS AND RECORD OF USE	DATE
60% SUBMITTAL	7/30/2019
30% SUBMITTAL	3/5/2019

REGISTERED PROFESSIONAL ENGINEER
BRIAN L. BUTLER
No. E 16569
ELECTRICAL
STATE OF CALIFORNIA

BLACK & VEATCH
JOINT VENTURE
BLACK & VEATCH
FILANC

CITY OF MORRO BAY
MORRO BAY WATER
RECLAMATION FACILITY (WRF)

CHEMICALS - CHEMICAL FACILITY
P&ID
CITRIC ACID STORAGE & FEED

DESIGNED: BLB, ADV
DETAILED: PVR
CHECKED: TAH
APPROVED:
DATE:

0 1/2 1
IF THIS BAR DOES NOT MEASURE 1" THEN DRAWING IS NOT TO FULL SCALE

PROJECT NO.
400530

90-I-006
SHEET
OF

PLOTTED: 3/17/2020 5:58:31 PM
D400530

TYPICAL I/O FOR ON-OFF VALVE NPW-V-0002, NPW-V-0003, NPW-V-0004

PCS HMI

90-CTRL-RIO-0001

WEIGHT WI 0001 | WEIGHT WI 0002 | OPENED ZIO 0001 | CLOSED ZIC 0001 | IN REMOTE YI 0001 | OPEN CMD ZCO 0001 | CLOSE CMD ZCC 0001 | TEMP TI 020X | COND AI 020X | TEMP TI 010X | COND AI 010X | HI PRESSURE PAH 0101 | LEAK DETECTED MAH 0101 | FAIL YA 0101 | IN REMOTE YI 0101 | RUNNING YIR 0101 | RUN CMD UCR 0101 | STOP CMD UCS 0101 | STROKE LENGTH NI 0101 | STROKE CMD NC 0101 | SPEED FEEDBACK SI 0101 | SPEED SETPT SC 0101 | HI PRESSURE PAH 0201 | LEAK DETECTED MAH 0201 | FAIL YA 0201 | IN REMOTE YI 0201 | RUNNING YIR 0201 | RUN CMD UCR 0201 | STOP CMD UCS 0201 | STROKE LENGTH NI 0201 | STROKE CMD NC 0201 | SPEED FEEDBACK SI 0201 | SPEED SETPT SC 0201 | EYEWASH FLOW FAH 0001

VALVE ACTUATOR: HS 0001 | LOR | HS 0001 | OSC | ZLC 0001 | ZLO 0001 | ZSC 0001 | ZSO 0001

FROM PLAN WATER SUPPLY AFTER NPW BACKFLOW PREVENTER

SEE TYPICAL I/O AND CONTROLS

1 1/2"-NPW-PVC-02

FI 010X | FI 020X | TIT 010X | AIT 010X COND | TE 010X | AE 010X COND

NPW-V-0001 | NPW-V-0003

1 1/2"-SA-CRP-01

TIT 020X | AIT 020X COND | TE 020X | AE 020X COND

HSO4-V-0101 | HSO4-V-0201

NPW-V-0002 | NPW-V-0004

1 1/2"-SA-CRP-02

HSO4-V-0208 | HSO4-V-0207

HSO4-V-0108 | HSO4-V-0107

SULFURIC ACID DILUTION PANEL 90-HSO4-PNL-0001

1 1/2"-SA-CRP-01

SULFURIC ACID STORAGE TOTE

WIT 0002 — 24V FROM PLC

WE 0002

SULFURIC ACID SECONDARY CONTAINMENT WITH INTEGRAL SCALE

Q HSO4-V-0002

SULFURIC ACID STORAGE TOTE

24V FROM PLC — WIT 0001

WE 0001

SULFURIC ACID SECONDARY CONTAINMENT WITH INTEGRAL SCALE

Q HSO4-V-0001

120V

1"-PW-CPVC-02

FROM POTABLE WATER SUPPLY

FSH 0001

90-HSO4-EMEW-0001

PLANT PIPING | YARD PIPING 2"-SA-CPVC-02

1"-SA-CS-12 — 1/2"-SA-TEFL-01 — UP 51-I-001 — TO RO FEED TANK OUTLET PIPING

NOTE 4

PLANT PIPING | YARD PIPING 2"-SA-CPVC-02

1"-SA-CS-12 — 1/2"-SA-TEFL-01 — UQ 52-I-001 — TO UV / AOP SYSTEM

NOTE 4

OOR | RUN: HS | SIC | YL | YA | MAH | PAH | I

90-HSO4-LCP-0101 (INTEGRAL TO PUMP)

OOR | RUN: HS | SIC | YL | YA | MAH | PAH | I

90-HSO4-LCP-0201 (INTEGRAL TO PUMP)

PSH 0101 | PG 0101 | 1"-SA-CRP-01 | PG 0102 | HSO4-V-0106 | NHS-V-0105 | HSO 4 P-0101 | MSH 0101 | HSO4-V-0104 | HSO4-V-0103 | 1/2"-SA-CRP-01 | HSO4-V-0102 | HSO4-V-0101

PSH 0201 | PG 0201 | 1"-SA-CRP-01 | PG 0202 | HSO4-V-0206 | NHS-V-0205 | HSO 4 P-0201 | MSH 0201 | HSO4-V-0204 | HSO4-V-0203 | 1/2"-SA-CRP-01 | HSO4-V-0202 | HSO4-V-0201

1"-SA-CRP-01

HSO4-V-0003

NOTE 5

NOTES:

1. SEE LEGEND AND ABBREVIATIONS ON DRAWINGS 00-I-001, 00-I-002 AND 00-I-003.
2. AREA CODE IS 90 UNLESS OTHERWISE NOTED. SYSTEM CODE IS HSO4 UNLESS OTHERWISE NOTED.
3. LOCAL CONTROL DEVICES SUCH AS INDICATING LIGHTS AND SWITCHES, LOCATED ON MCC's OR AT DRIVEN EQUIPMENT, MAY NOT BE SHOWN ON THIS P&ID.
4. PIPING DOWNSTREAM OF DILUTION PANEL TO BE TEFLON LINED STEEL MINIMUM LENGTH 15 FT DUE TO HEAT GENERATION DURING DILUTION PROCESS.
5. DETAILS OF FEEDER / BLENDER SKID TO BE CONFIRMED WITH SELECTED VENDOR EQUIPMENT.

90% SUBMITTAL - NOT FOR CONSTRUCTION

NO.	BY	CHK	APP	DATE	REVISIONS AND RECORD OF USE
B	BLB	TAH	EVB	7/30/2019	60% SUBMITTAL
A	BLB	TAH	EVB	3/5/2019	30% SUBMITTAL

REGISTERED PROFESSIONAL ENGINEER — BRIAN L. BUTLER — No. E 16569 — ELECTRICAL — STATE OF CALIFORNIA

BLACK & VEATCH

JOINT VENTURE

FILANC

BLACK & VEATCH

CITY OF MORRO BAY
MORRO BAY WATER RECLAMATION FACILITY (WRF)

CHEMICALS - CHEMICAL FACILITY P&ID

SULFURIC ACID STORAGE & FEED

DESIGNED: BLB, ADV
DETAILED: PVR
CHECKED: TAH
APPROVED:
DATE:

0 1/2 1
IF THIS BAR DOES NOT MEASURE 1" THEN DRAWING IS NOT TO FULL SCALE

PROJECT NO. 400530

90-I-007
SHEET
OF

PLOTTED: 3/17/2020 5:58:45 PM
D400530

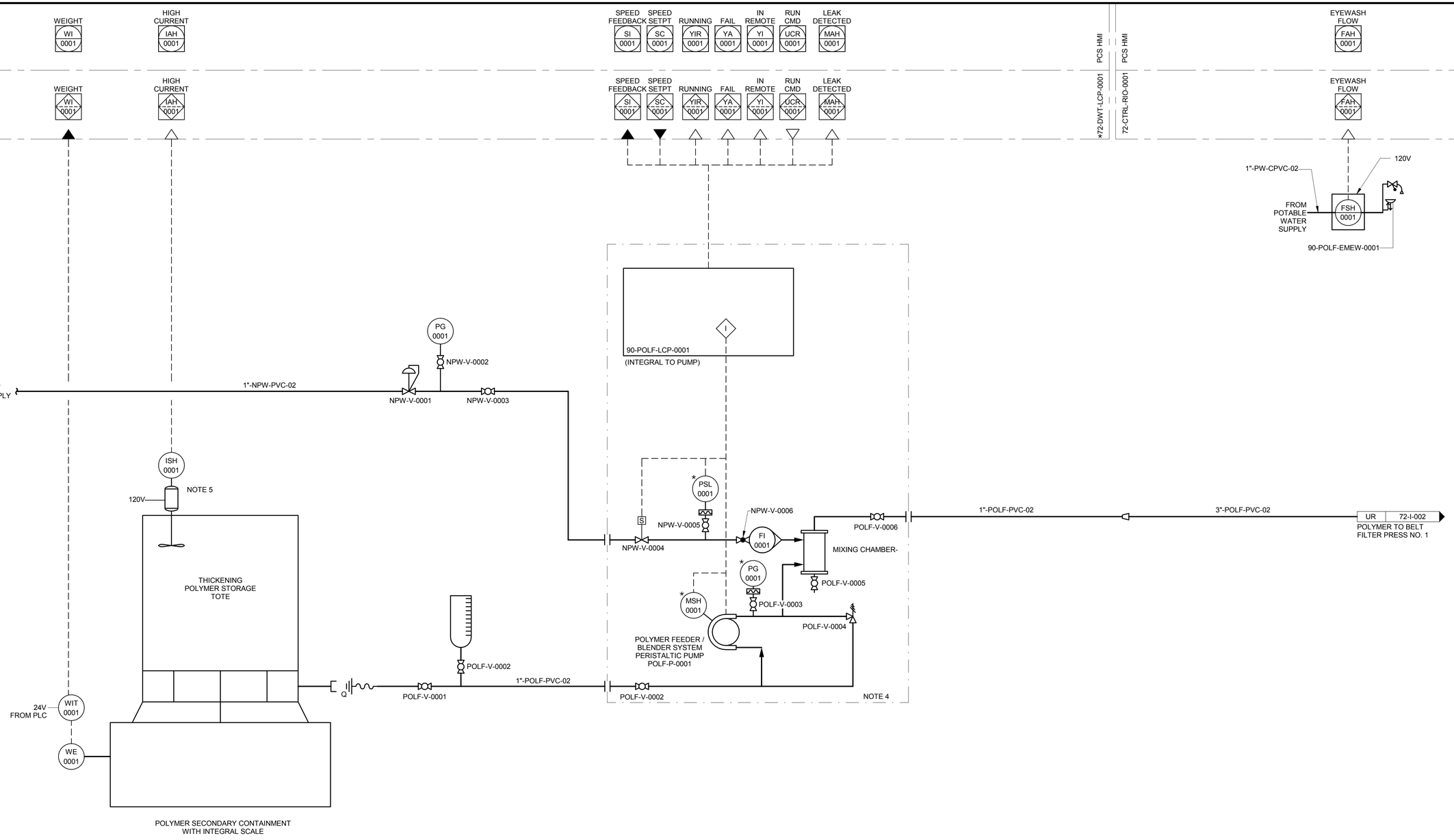

NOTES:

1. SEE LEGEND AND ABBREVIATIONS ON DRAWING 00-I-001, 00-I-002 AND 00-I-003.
2. AREA CODE IS 90 UNLESS OTHERWISE NOTED. SYSTEM CODE IS POLF UNLESS OTHERWISE NOTED.
3. LOCAL CONTROL DEVICES SUCH AS INDICATING LIGHTS AND SWITCHES, LOCATED IN MCC's OR AT DRIVEN EQUIPMENT MAY NOT INDICATED ON THIS P&ID.
4. DETAILS OF FEEDER / BLENDER SKID TO BE CONFIRMED WITH SELECTED VENDOR EQUIPMENT.
5. MIXER TO BE POWERED FROM LOCAL WALL RECEPTICLE, REFER TO POLYMER SYSTEM SPECIFICATION FOR ADDITIONAL INFORMATION.

90% SUBMITTAL - NOT FOR CONSTRUCTION

NO.	BY	CHK	APP'D	DATE	REVISIONS AND RECORD OF USE
B	BLB	TAH	EVB	7/30/2019	60% SUBMITTAL
A	BLB	TAH	EVB	3/5/2019	30% SUBMITTAL

REGISTERED PROFESSIONAL ENGINEER
BRIAN L. BUTLER
No. E 16569
ELECTRICAL
STATE OF CALIFORNIA

BLACK & VEATCH
JOINT VENTURE
BLACK & VEATCH
FILANC

CITY OF MORRO BAY
MORRO BAY WATER
RECLAMATION FACILITY (WRF)

CHEMICALS - DEWATERING AREA
P&ID
THICKENING POLYMER STORAGE & FEED

DESIGNED: BLB, ADV
DETAILED: PVR
CHECKED: TAH
APPROVED:
DATE:

0 1/2 1
IF THIS BAR DOES NOT MEASURE 1" THEN DRAWING IS NOT TO FULL SCALE

PROJECT NO.
400530

90-I-008
SHEET
OF

PLOTTED: 3/17/2020 5:58:35 PM
D400530

PCS HMI

90-CTRL-RIO-0001

WEIGHT WI 0001

WEIGHT WI 0002

SPEED FEEDBACK SI 0001

SPEED SETPT SC 0001

RUNNING YIR 0001

FAIL YA 0001

IN REMOTE YI 0001

RUN CMD UCR 0001

HI PRESSURE PAH 0001

LEAK DETECTED MAH 0001

EYEWASH FLOW FAH 0001

90-LAS-LCP-0001
(INTEGRAL TO PUMP)

120V

1"-PW-CPVC-02

FROM POTABLE WATER SUPPLY

FSH 0001

90-LAS-EMEW-0001

LIQUID AMMONIA SULFATE STORAGE TOTE

24V FROM PLC

WIT 0002

WE 0002

LIQUID AMMONIA SULFATE SECONDARY CONTAINMENT WITH INTEGRAL SCALE

1"-LAS-PVC-02

LAS-V-0002

2"-LAS-CPVC-02

1/2"-LAS-PE-06

PLANT PIPING

YARD PIPING

US 33-I-001

LIQUID AMMONIA SULFATE TO RO FEED

1"-LAS-PVC-02

PG 0002

LAS-V-0007

LAS-V-0008

LAS-V-0006

PG 0001

PSH 0001

MSH 0001

1/2"-LAS-PVC-02

1"-LAS-PVC-02

LAS-V-0005

LAS-V-0004

LAS-V-0001

1"-LAS-PVC-02

LAS-V-0003

LIQUID AMMONIA SULFATE METERING PUMP LAS-P-0001

NOTE 4

LIQUID AMMONIA SULFATE STORAGE TOTE

24V FROM PLC

WIT 0001

WE 0001

LIQUID AMMONIA SULFATE SECONDARY CONTAINMENT WITH INTEGRAL SCALE

NOTES:

1. SEE LEGEND AND ABBREVIATIONS ON DRAWING 00-I-001, 00-I-002 AND 00-I-003.
2. AREA CODE IS 90 UNLESS OTHERWISE NOTED. SYSTEM CODE IS LAS UNLESS OTHERWISE NOTED.
3. LOCAL CONTROL DEVICES SUCH AS INDICATING LIGHTS AND SWITCHES, LOCATED ON MCC'S OR AT DRIVEN EQUIPMENT, MAY NOT BE SHOWN ON THIS P&ID.
4. DETAILS OF FEEDER / BLENDER SKID TO BE CONFIRMED WITH SELECTED VENDOR EQUIPMENT.

90% SUBMITTAL - NOT FOR CONSTRUCTION

NO.	BY	CHK'D APP'D	DATE	REVISIONS AND RECORD OF USE

REGISTERED PROFESSIONAL ENGINEER
BRIAN L. BUTLER
No. E 16569
ELECTRICAL
STATE OF CALIFORNIA

BLACK & VEATCH JOINT VENTURE

BLACK & VEATCH

FILANC

CITY OF MORRO BAY
MORRO BAY WATER
RECLAMATION FACILITY (WRF)

CHEMICALS - CHEMICAL FACILITY
P&ID
LIQUID AMMONIA AULFATE

DESIGNED: BLB, ADV
DETAILED: VSD
CHECKED: TAH
APPROVED:
DATE:

0 1/2 1
IF THIS BAR DOES NOT MEASURE 1" THEN DRAWING IS NOT TO FULL SCALE

PROJECT NO. 400530

90-I-009
SHEET
OF

PLOTTED: 3/17/2020 5:58:46 PM
D400530

PCS HMI

51-CTRL-RIO-0001

PUMP 1 OR 2 RUNNING YIR 0001

SBPS FAIL UA 1001

SBPS HI LEVEL LAH 1001

PCS HMI

51-CTRL-RIO-0001

PUMP 1 OR 2 RUNNING YIR 0001

SBPS FAIL UA 1001

SBPS HI LEVEL LAH 1001

480V

SANITARY PUMPING SYSTEM LCP
95-SAN-LCP-0001

I

*HS 0101

2"-STW-PVC

STW-V-0005

PACKAGE PUMP STATION

STW-P-0101

STORM BASIN OUTLET CONTROL AND PUMP STATION

FROM PLANT SEWER

8"-SAN-PVC

FROM OPERATION BUILDING

8"-SAN-PVC

FROM DECHLORINATION STATION

4"-SAN-PVC

*LSHH 0001

*LSH 0001

*LSM 0001

*LSL 0001

*TSH 0101

*MSH 0101

*TSH 0201

*MSH 0201

4"-SAN-DIP

4"-SAN-DIP

SAN-P-0101

SAN-P-0201

PACKAGE PUMP STATION*

SANITARY LIFT STATION

BY SANITARY SEWER LIFT STATION SUPPLIER

BY GENERAL CONTRACTOR

DIP

HDPE

SAN-V-0001

SAN-V-0003
6"-SAN-DIP

SAN-V-0002

SAN-V-0006

*VALVE VAULT

SAN-V-0007

SAN-V-0009

4"-SAN-DIP

SAN-V-0008

SAN-V-0010
6"-SAN-DIP

6"-SAN-HDPE

ZY 21-I-001
TO HEADWORKS 18" WWR

6"-SAN-HDPE

ZZ 21-I-001
TO HEADWORKS 14" WWR

NOTES:

1. SEE LEGEND AND ABBREVIATIONS ON DRAWINGS 00-I-001, 00-1-002 AND 00-1-003.
2. AREA CODE IS 95 UNLESS OTHERWISE NOTED. SYSTEM CODE IS SAN FOR SANITARY LIFT PUMP STATION AND STW FOR STORM BASIN OUTLET PUMP STATION.

* ITEM TO BE PROVIDED BY SANITARY LIFT STATION SYSTEM SUPPLIER.

90% SUBMITTAL - NOT FOR CONSTRUCTION

NO.	BY	CHK	APP'D
A	BLB	TAH	EVB

60% SUBMITTAL
REVISIONS AND RECORD OF USE
DATE 7/30/2019

REGISTERED PROFESSIONAL ENGINEER
BRIAN L. BUTLER
No. E 16569
ELECTRICAL
STATE OF CALIFORNIA

BLACK & VEATCH
JOINT VENTURE
BLACK & VEATCH
FILANC

CITY OF MORRO BAY
FILANC BLACK & VEATCH DB PROPOSAL
RECLAMATION FACILTY (WRF)

P&ID
SANITARY PUMPING SYSTEM

DESIGNED: BLB,KEZ
DETAILED: PVR
CHECKED: TAH
APPROVED:
DATE:

0 1/2 1
IF THIS BAR DOES NOT MEASURE 1" THEN DRAWING IS NOT TO FULL SCALE

PROJECT NO.
400530

95-I-001
SHEET
OF

PLOTTED: 3/17/2020 5:59:14 PM

D400530

STRUCTURAL LEGENDS & ABBREVIATIONS

ABBREVIATIONS

A

ADDL	ADDITIONAL
AFF	ABOVE FINISH FLOOR
AHR	ANCHOR
AHU	AIR HANDLING UNIT
ALT	ALTERNATE
ALUM	ALUMINUM
APPROX	APPROXIMATE
AROD	ANCHOR ROD
ARCH	ARCHITECTURAL
ASSY	ASSEMBLY
AWG	AMERICAN WIRE GAUGE

B

BLDG	BUILDING
BM	BENCHMARK, BEAM
BO	BOTTOM OF
BOT	BOTTOM
BRDG	BRIDGING
BRG	BEARING
BTWN	BETWEEN

C

C	CAMBER
CANTIL	CANTILEVER
CHKD	CHECKERED
CHKDPL	CHECKERED PLATE
CIP	CAST-IN-PLACE
CJ	CONTRACTION JOINT
CJP	COMPLETE JOINT PENETRATION
CL	CENTERLINE
CLR	CLEAR
CMU	CONCRETE MASONRY UNIT
COL	COLUMN
CONC	CONCRETE
CONN	CONNECTION
CONSTR	CONSTRUCTION
CONT	CONTINUOUS, CONTINUATION, CONTROL
COORD	COORDINATE
COV	COVER
CRNR	CORNER
CSJ	CONSTRUCTION JOINT
CTRS	CENTERS

D

db	BAR DIAMETER
DBA	DEFORMED BAR ANCHOR
DET	DETAIL
DIA	DIAMETER
DIM	DIMENSION
DN	DOWN
DWA	DEFORMED WIRE ANCHOR
DWG	DRAWING
DWL	DOWEL

E

E	EAST
EA	EACH
EF	EACH FACE
EJ	EXPANSION JOINT
EL	ELEVATION
EMBED	EMBEDMENT
EMER	EMERGENCY
ENGR	ENGINEER
EOR	ENGINEER OF RECORD
EQ	EQUAL
EQUIP	EQUIPMENT
EQUIV	EQUIVALENT
EW	EACH WAY
EXIST	EXISTING
EXP	EXPANSION
EXT	EXTERIOR

F

FAB	FABRICATE
f'c	28 DAY CONCRETE STRENGTH =
FD	FLOOR DRAIN
FDN	FOUNDATION
FIN	FINISH(ED)
FLR	FLOOR
FS	FAR SIDE
FT	FOOT
FTG	FOOTING
FUT	FUTURE
FV	FIELD VERIFY
Fy	STRUCTURAL STEEL YIELD STRENGTH =
fy	REINFORCING STEEL YIELD STRENGTH =

G

GA	GAUGE
GALV	GALVANIZED
GEN	GENERAL
GR	GRADE

H

H	HORIZONTAL REACTION
HC	HOLLOW CORE
HEX	HEXAGONAL
HGR	HANGER
HORIZ	HORIZONTAL
HP	HIGH POINT
HSA	HEADED STUD ANCHOR
HSS	HOLLOW STRUCTURAL SECTION

I

ID	INSIDE DIAMETER
IF	INSIDE FACE
IN	INCHES
INT	INTERIOR, INTERNAL
INV	INVERT

J

JT	JOINT

K

K	KIPS (1000 LBS)
KSF	KIPS PER SQUARE FOOT
KSI	KIPS PER SQUARE INCH

L

LAB	LABORATORY
LB	POUND
LD	DEVELOPMENT LENGTH
LIN	LINES
LLBB	LONG LEG BACK TO BACK
LLH	LONG LEG HORIZONTAL
LLV	LONG LEG VERTICAL
LOC	LOCATION
LONG	LONGITUDINAL
LP	LOW POINT
LSLT	LONG SLOTTED HOLE TRANSVERSE
LSH	LONG SIDE HORIZONTAL
LSHP	LONG SLOTTED HOLE PARALLEL
LSV	LONG SIDE VERTICAL
LWC	LIGHTWEIGHT CONCRETE

M

M	MOMENT
MAS	MASONRY
MAX	MAXIMUM
MATL	MATERIAL
MC	MOMENT CONNECTION, MECHANICAL COUPLING
MECH	MECHANICAL
MEZZ	MEZZANINE
MFR	MANUFACTURE(R)
MIN	MINIMUM
MISC	MISCELLANEOUS
MTL	METAL

N

N	NORTH
N/A	NOT APPLICABLE
NIC	NOT IN CONTRACT
NO.	NUMBER
NOM	NOMINAL
NS	NEAR SIDE
NTS	NOT TO SCALE
NWC	NORMAL WEIGHT CONCRETE

O

OC	ON CENTER
OD	OUTSIDE DIAMETER
OF	OUTSIDE FACE
OPER	OPERATING
OPH	OPPOSITE HAND
OPNG	OPENING
OPP	OPPOSITE
OVS	OVERSIZED HOLE
OZ	OUNCE

P

P	AXIAL LOAD
PAF	POWDER ACTUATED FASTENER
PAR	PARALLEL
PCC	PRECAST CONCRETE
PCF	POUNDS PER CUBIC FOOT
PERP	PERPENDICULAR
PL	PLATE
PLCS	PLACES
PLF	POUNDS PER LINEAR FOOT
PJP	PARTIAL JOINT PENETRATION
PR	PAIR
PRELIM	PRELIMINARY
PROP	PROPERTY
PSF	POUNDS PER SQUARE FOOT
PSI	POUNDS PER SQUARE INCH
PT	POST TENSIONED

Q

QTY	QUANTITY

R

R	RADIUS
RCP	REINFORCED CONCRETE PIPE
RD	ROOD DRAIN
REF	REFERENCE
REINF	REINFORCEMENT
REQD	REQUIRED
REV	REVISION
RO	ROUGH OPENING

S

S	SOUTH
SC	SLIP CRITICAL, SHEAR CONNECTOR
SCHED	SCHEDULE
SDS	SELF DRILLING SCREW
SECT	SECTION
SH	SHEET
SIM	SIMILAR
SJ	SAW JOINT
SLBB	SHORT LEG BACK TO BACK
SOG	SLAB ON GRADE
SPA	SPACING
SPEC	SPECIFICATION
SPRT	SUPPORT
SQ	SQUARE
SSHP	SHORT SLOTTED HOLE PARALLEL
SSHT	SHORT SLOTTED HOLE TRANSVERSE
STD	STANDARD
STIF	STIFFENER
STIR	STIRRUP
STL	STEEL
STR	STRUCTURE, STRUCTURAL
SYM	SYMMETRICAL

T

T	TREAD, SCHEDULED PLATE THICKNESS
T&B	TOP & BOTTOM
TAN	TANGENT
TEMP	TEMPERATURE
THK	THICK, THICKNESS
THD	THREADED
TO	TOP OF
TOC	TOP OF CONCRETE
TOF	TOP OF FOOTING
TOM	TOP OF MASONRY
TOS	TOP OF STEEL, TOP OF SLAB
TOW	TOP OF WALL
TYP	TYPICAL

U

UNO	UNLESS NOTED OTHERWISE
USGS	UNITED STATES GEOLOGICAL SURVEY

V

VERT	VERTICAL
VNR	VENEER

W

W	WEST
W/	WITH
W/O	WITHOUT
WF	WIDE FLANGE
WP	WORK POINT
WS	WATERSTOP
WT	WEIGHT
WWR	WELDED WIRE REINFORCEMENT

X

x	BY, TIMES
XS	EXTRA STRONG
XXS	DOUBLE EXTRA STRONG

Y

NOT USED

Z

ZD	ZONE DAMPER

SPECIAL CHARACTERS

@	AT
&	AND
ø	DIAMETER
#	NUMBER
%	PERCENT

WELD SYMBOL LEGEND

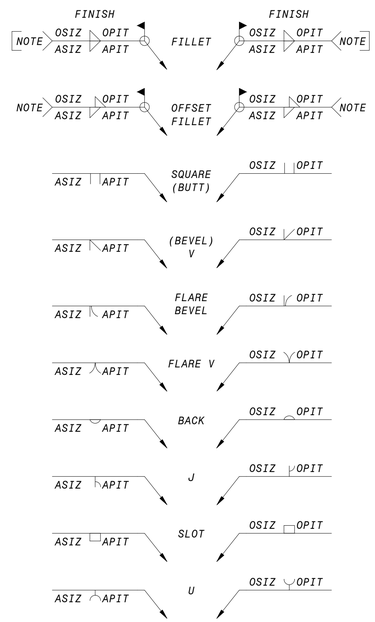

STRUCTURAL TAG LEGEND

W00x00	**COLUMN TAG** COLUMN TYPE
TYPE MARK	**STRUCTURAL FOUNDATION** (TYPE MARK)
X00x00	**STRUCTURAL FRAMING** FRAMING TYPE
00K00	**STRUCTURAL FRAMING** JOIST OR SLAB

DESIGN PARAMETERS

GENERAL PARAMETERS

BUILDING CODE	2016 CBC *
ROOF LOADS	
DEAD LOADS (DL)	VARIES (12 PSF MIN)
LIVE LOADS (LL)	20 PSF
FLOOR LOADS	
OPERATING	
DEAD LOADS (DL)	VARIES
LIVE LOADS (LL)	150 PSF
NON-OPERATING	
DEAD LOADS (DL)	VARIES
LIVE LOADS (LL)	150 PSF
CONTROL ROOM FLOORS	
DEAD LOADS (DL)	VARIES
LIVE LOADS (LL)	250 PSF
MISCELLANEOUS	
LARGE EQUIPMENT AREAS	
DEAD LOADS (DL)	VARIES
ADDITIONAL LIVE LOADS (LL)	50 PSF
WALKWAYS, PLATFORMS, STAIRS	
DEAD LOADS (DL)	VARIES
LIVE LOADS (LL)	100 PSF
STORAGE - GENERAL	
DEAD LOADS (DL)	VARIES
LIVE LOADS (LL)	250 PSF

SOILS VALUES (PER SOILS REPORT)

FOOTINGS	
BEARING PRESSURE-RECOMPACTED FILL (DL)	2000 PSF
BEARING PRESSURE-RECOMPACTED FILL (DL+LL)	3000 PSF
MAT FOUNDATIONS	
BEARING PRESSURE-RECOMPACTED FILL (DL+LL)	2000 PSF
BEARING PRESSURE-RECOMPACTED FILL (DL+LL+ISOLATED COLUMNS)	3000 PSF
LATERAL PASSIVE EFP	350 PCF
AT-REST EFP-(NATIVE SOIL/CRUSHED BEDROCK)	65 PCF
ACTIVE EFP-(NATIVE SOIL/CRUSHED BEDROCK)	50 PCF
FRICTION COEFFICIENT	0.40

WIND DESIGN BASIS

ULTIMATE WIND SPEED, V_{ULT}	115 MPH
NOMINAL WIND SPEED, V_{ASD}	89 MPH
RISK CATEGORY	III
EXPOSURE	C
IMPORTANCE FACTOR, I_w	1.00

SEISMIC DESIGN BASIS

SEISMIC DESIGN CATEGORY	D
SITE CLASS	C
SEISMIC FACTORS	
S_S / S_1	1.135 / 0.421
S_{DS} / S_{D1}	0.757 / 0.387
RISK CATEGORY	III
IMPORTANCE FACTOR, I_e	1.25

*THE 2016 CALIFORNIA BUILDING CODE (CBC), BASED ON THE 2015 INTERNATIONAL BUILDING CODE (IBC), IS THE GOVERNING CODE IN THE STATE OF CALIFORNIA.

90% SUBMITTAL - NOT FOR CONSTRUCTION

NO.	BY	CHK APP	DATE	REVISIONS AND RECORD OF USE

REGISTERED PROFESSIONAL ENGINEER
CHARLES R. ASHLEY JR.
S 5258
STRUCTURAL
STATE OF CALIFORNIA

Ashley & Vance ENGINEERING, INC
JOINT VENTURE
BLACK & VEATCH
FILANC

CITY OF MORRO BAY
FILANC BLACK & VEATCH DB PROPOSAL
WATER RECLAMATION FACILITY (WRF)

GENERAL
STRUCTURAL
STRUCTURAL LEGENDS & ABBREVIATIONS

DESIGNED: M. MARSH
DETAILED: S. BENJAMIN
CHECKED: I. SHOEBRIDGE
APPROVED: C. ASHLEY
DATE: XX/XX/XXXX

0 1/2 1
IF THIS BAR DOES NOT MEASURE 1" THEN DRAWING IS NOT TO FULL SCALE

PROJECT NO.
400530

00-S-001
SHEET
OF XXX

PLOTTED: 3/24/2020 10:53:32 AM
D400530

STRUCTURAL GENERAL NOTES

GENERAL

1. THE FOLLOWING NOTES, DETAILS, SCHEDULES & SPECIFICATIONS SHALL APPLY TO ALL PHASES OF THIS PROJECT UNLESS SPECIFICALLY NOTED OTHERWISE. NOTES AND DETAILS ON THE STRUCTURAL PLANS SHALL TAKE PRECEDENCE OVER GENERAL NOTES AND TYPICAL DETAILS. WHERE NO DETAILS ARE GIVEN, CONSTRUCTION SHALL BE AS SHOWN FOR SIMILAR WORK.
2. ALL DRAWINGS ARE CONSIDERED TO BE PART OF THE CONTRACT DOCUMENTS. THE DESIGN-BUILDER SHALL BE RESPONSIBLE FOR THE REVIEW AND COORDINATION OF ALL DRAWINGS AND SPECIFICATIONS PRIOR TO THE START OF CONSTRUCTION. ANY DISCREPANCIES SHALL BE BROUGHT TO THE ATTENTION OF THE ENGINEER OF RECORD PRIOR TO THE START OF CONSTRUCTION SO THAT A CLARIFICATION CAN BE ISSUED. ANY WORK PERFORMED IN CONFLICT WITH THE CONTRACT DOCUMENTS OR ANY APPLICABLE CODE REQUIREMENTS SHALL BE CORRECTED BY THE DESIGN-BUILDER AT NO EXPENSE TO THE OWNER OR ENGINEER OF RECORD.
3. ALL INFORMATION ON EXISTING CONDITIONS SHOWN ON THE STRUCTURAL PLANS ARE BASED ON BEST PRESENT KNOWLEDGE AVAILABLE, BUT WITHOUT GUARANTEE OF ACCURACY. THE DESIGN-BUILDER SHALL BE RESPONSIBLE FOR THE VERIFICATIONS OF ALL DIMENSION AND CONDITIONS AT THE SITE. ANY DISCREPANCIES BETWEEN ACTUAL SITE CONDITIONS AND INFORMATION SHOWN ON THE DRAWINGS OR IN THE SPECIFICATIONS SHALL BE BROUGHT TO THE ATTENTION OF THE EOR PRIOR TO THE START OF CONSTRUCTION.
4. REFER TO THE ARCHITECTURAL PLANS FOR THE FOLLOWING:
    (A) SIZE AND LOCATION OF ALL BUILDING INTERIOR AND EXTERIOR WALL LOCATIONS.
    (B) SIZE AND LOCATION OF ALL BUILDING FLOOR, ROOF AND WALL OPENINGS
    (C) SPECIFICATION OF ALL BUILDING FINISHES & WATERPROOFING
    (D) ALL OTHER NON-STRUCTURAL ELEMENTS
5. REFER TO THE MECHANICAL, ELECTRICAL AND PLUMBING PLANS FOR THE FOLLOWING:
    (A) SIZE AND LOCATION OF ALL EQUIPMENT
    (B) PIPE RUNS, SLEEVES, HANGERS AND TRENCHES
    (C) ALL OTHER MECHANICAL, ELECTRICAL OR PLUMBING RELATED ELEMENTS
6. CONSTRUCTION MATERIALS SHALL BE UNIFORMLY SPREAD OUT IF PLACED ON FLOOR OR ROOF SO AS TO NOT OVERLOAD THE FRAMING. LOAD SHALL NOT EXCEED THE DESIGN LIVE LOAD PER SQUARE FOOT. IT IS THE DESIGN-BUILDER'S RESPONSIBILITY TO PROVIDE ADEQUATE SHORING AND/OR BRACING AS REQUIRED.
7. SPECIFICATIONS AND DETAILING OF ALL WATERPROOFING AND DRAINAGE ITEMS, WHILE SOMETIMES SHOWN ON THE STRUCTURAL PLANS FOR GENERAL INFORMATION PURPOSES ONLY, ARE SOLELY THE DESIGN RESPONSIBILITY OF OTHERS.
8. THE ENGINEER OF RECORD WILL NOT BE RESPONSIBLE FOR AND WILL NOT HAVE CONTROL OR CHARGE OF CONSTRUCTION MEANS, METHODS, TECHNIQUES, SEQUENCES OR PROCEDURES, OR FOR SAFETY PRECAUTIONS AND PROGRAMS IN CONNECTION WITH THE CONSTRUCTION DELINEATED BY THESE PLANS. IT SHOULD BE UNDERSTOOD THAT THE DESIGN-BUILDER OR HIS/HER AGENT(S) SHALL SUPERVISE AND DIRECT ALL WORK AND SHALL BE SOLELY AND COMPLETELY RESPONSIBLE FOR ALL CONSTRUCTION MEANS, METHODS, TECHNIQUES, SEQUENCES, PROCEDURES AND CONDITIONS ON THE JOB SITE, INCLUDING SAFETY OF ALL PERSONS AND PROPERTY DURING THE ENTIRE PERIOD OF CONSTRUCTION. PERIODIC OBSERVATIONS BY THE ENGINEER OF RECORD, HIS STAFF OR REPRESENTATIVES ARE NOT INTENDED TO INCLUDE VERIFICATION OF DIMENSIONS OR REVIEW THE ADEQUACY OF THE DESIGN-BUILDER'S SAFETY MEASURES ON OR NEAR THE CONSTRUCTION SITE.
9. MODIFICATIONS OF THE PLANS, NOTES, DETAILS AND SPECIFICATIONS SHALL NOT BE PERMITTED WITHOUT PRIOR APPROVAL FROM THE ENGINEER OF RECORD.
10. ALL WORKMANSHIP SHALL CONFORM TO THE BEST PRACTICE PREVAILING IN THE VARIOUS TRADES PERFORMING THE WORK. THE DESIGN-BUILDER SHALL BE RESPONSIBLE FOR COORDINATING THE WORK OF ALL TRADES.
11. IT IS THE DESIGN-BUILDER'S RESPONSIBILITY TO ENSURE THAT ONLY APPROVED STRUCTURAL PLANS ARE USED DURING THE COURSE OF CONSTRUCTION. THE USE OF UNAPPROVED DOCUMENTS SHALL BE AT THE DESIGN-BUILDER'S OWN RISK. CORRECTIONS OF ALL WORK BASED ON SUCH DOCUMENTS SHALL BE PERFORMED AT THE DESIGN-BUILDER'S EXPENSE.
12. THESE PLANS AND SPECIFICATIONS REPRESENT THE STRUCTURAL DESIGN ONLY. NO INFORMATION NOR WARRANTY IS PROVIDED FOR THE WORK OF ANY OTHER CONSULTANT (ARCHITECT, MECHANICAL, ELECTRICAL, ETC.). THIS INCLUDES, BUT IS NOT LIMITED TO, WATERPROOFING, DRAINAGE, VENTILATION, ACCESSIBILITY.

FOUNDATIONS

1. REFER TO STRUCTURAL DESIGN PARAMETERS SECTION ON SHEET 00-S-001 FOR ALL SOIL DESIGN VALUES USED IN CALCULATIONS.
2. SOILS VALUES PER GEOLOGIC/GEOTECHNICAL REPORT (OR "SOILS REPORT") BY EARTH SYSTEMS PACIFIC, FILE NO. 301964-002, DATED JULY 1, 2019. THIS REPORT AND ALL RECOMMENDATIONS CONTAINED THEREIN ARE TO BE CONSIDERED A PART OF THESE PLANS.
3. IT IS THE DESIGN-BUILDER'S RESPONSIBILITY TO OBTAIN A COPY OF THE SOILS REPORT FROM THE OWNER. A COPY OF THE SOILS REPORT SHALL BE ON THE JOB SITE DURING THE COURSE OF CONSTRUCTION.
4. UNEXPECTED SOIL CONDITIONS: ALLOWABLE VALUES AND SUBSEQUENT FOUNDATION DESIGNS ARE BASED ON SOIL CONDITIONS WHICH ARE SHOWN BY TEST BORINGS. ACTUAL SOIL CONDITIONS WHICH DEVIATE APPRECIABLY FROM THAT SHOWN IN THE TEST BORINGS SHALL BE REPORTED TO THE ENGINEER OF RECORD IMMEDIATELY.
5. ALL COMPACTION, FILL, BACKFILLING AND SITE PREPARATION SHALL BE PERFORMED IN ACCORDANCE WITH PROJECT SOILS REPORT OR THE GOVERNING BUILDING CODE CHAPTER 18 & APPENDIX J. ALL SUCH WORK SHALL BE PERFORMED PER THE RECOMMENDATIONS OF THE PROJECT SOILS ENGINEER OF RECORD.
6. EXCAVATE TO REQUIRED DEPTHS AND DIMENSIONS (AS INDICATED IN THE DRAWINGS), CUT SQUARE AND SMOOTH WITH FIRM LEVEL BOTTOMS. CARE SHALL BE TAKEN NOT TO OVER-EXCAVATE FOUNDATION AT LOWER ELEVATION AND PREVENT DISTURBANCE OF SOILS AROUND HIGH ELEVATION.
7. FOUNDATIONS SHALL BE POURED IN NEAT EXCAVATIONS.
8. EXCAVATE ALL FOUNDATIONS TO REQUIRED DEPTHS INTO COMPACTED FILL OR NATURAL SOIL (AS PER PLANS AND DETAILS) AND AS VERIFIED BY THE BUILDING OFFICIAL AND/OR SOILS ENGINEER OF RECORD.
9. ALL FOUNDATIONS SHALL BE INSPECTED AND APPROVED BY THE APPROPRIATE INSPECTOR AND/OR A REPRESENTATIVE OF THE SOILS ENGINEER OF RECORD PRIOR TO FORMING AND PLACEMENT OF REINFORCING OR CONCRETE.
10. FOUNDATIONS SHALL NOT BE POURED UNTIL ALL REQUIRED REINFORCING STEEL, FRAMING HARDWARE, SLEEVES, INSERTS, CONDUITS, PIPES, ETC. AND FORMWORK IS PROPERLY PLACED AND INSPECTED BY THE APPROPRIATE INSPECTOR(S).
11. IT IS THE RESPONSIBILITY OF THE DESIGN-BUILDER IN CHARGE OF FRAMING TO PROPERLY POSITION ALL HOLDOWN BOLTS, ANCHOR BOLTS, COLUMN BASES, AND ALL OTHER CAST-IN-PLACE HARDWARE. REFER TO TYPICAL DETAILS. ALL HARDWARE TO BE SECURED PRIOR TO FOUNDATION INSPECTIONS.
12. THE SIDES AND BOTTOMS OF DRY EXCAVATIONS MUST BE MOISTENED JUST PRIOR TO PLACING CONCRETE. CONVERSELY, DE-WATER FOOTINGS AS REQUIRED TO REMOVE STANDING WATER AND TO MAINTAIN OPTIMUM WORKING CONDITIONS.
13. THE DESIGN-BUILDER SHALL BE SOLELY RESPONSIBLE FOR ALL EXCAVATION PROCEDURES INCLUDING LAGGING, SHORING, AND THE PROTECTION OF ADJACENT PROPERTY, STRUCTURES, STREETS, AND UTILITIES IN ACCORDANCE WITH ALL FEDERAL, STATE AND LOCAL SAFETY ORDINANCES. THE DESIGN-BUILDER SHALL PROVIDE FOR THE DESIGN AND INSTALLATION OF ALL CRIBBING, BRACING AND SHORING REQUIRED.

90% SUBMITTAL - NOT FOR CONSTRUCTION

NO.	BY	CHK	APP	DATE	REVISIONS AND RECORD OF USE

REGISTERED PROFESSIONAL ENGINEER
CHARLES R. ASHLEY JR.
S 5258
STRUCTURAL
STATE OF CALIFORNIA

Ashley & Vance ENGINEERING, INC
JOINT VENTURE
BLACK & VEATCH
FILANC

CITY OF MORRO BAY
FILANC BLACK & VEATCH DB PROPOSAL
WATER RECLAMATION FACILITY (WRF)

GENERAL
STRUCTURAL
GENERAL NOTES

DESIGNED: M. MARSH
DETAILED: S. BENJAMIN
CHECKED: I. SHOEBRIDGE
APPROVED: C. ASHLEY
DATE: XX/XX/XXXX

0 1/2 1
IF THIS BAR DOES NOT MEASURE 1" THEN DRAWING IS NOT TO FULL SCALE

PROJECT NO.
400530

00-S-002
SHEET
OF XXX

PLOTTED: 3/24/2020 10:53:33 AM
D400530

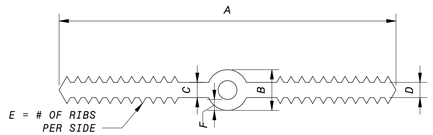

TYPE	A	B	C	D	E	F	APPLICATION
W/O CENTERBULB	6"	-	3/8"	3/8"	7	-	SEE NOTES 2 & 6
W/O CENTERBULB	9"	-	3/8"	3/8"	10	-	SEE NOTES 2 & 7
CENTERBULB	6"	7/8"	3/8"	3/8"	8	9/16"	SEE NOTES 4 & 6
CENTERBULB	9"	1"	3/8"	3/8"	8	1/4"	SEE NOTE 4
CENTERBULB	9"	1 1/2"	3/8"	1/4"	8	5/16"	SEE NOTE 5

NOTES:
1. SEE SPECIFICATIONS FOR MATERIAL REQUIREMENTS. NON-METALLIC WATERSTOPS ARE REQUIRED FOR CONCRETE JOINTS SUBJECTED TO CHLORINATED WATER, SEAWATER, AND WATERBORNE CHEMICALS.
2. FOR CONSTRUCTION JOINTS.
3. SEE SPLICE DETAIL (**1/00-S-101**).
4. FOR EXPANSION/CONTROL JOINTS 1" AND NARROWER.
5. FOR EXPANSION/CONTROL JOINTS WIDER THAN 1".
6. USE 6 INCH WATERSTOPS IN ALL JOINTS IN CONCRETE SECTIONS LESS THAN 12" IN THICKNESS UNLESS SPECIFICALLY SHOWN OTHERWISE.
7. USE 9 INCH WATERSTOPS IN ALL JOINTS IN CONCRETE SECTIONS GREATER THAN OR EQUAL TO 12" IN THICKNESS UNLESS SPECIFICALLY SHOWN OTHERWISE.
8. PVC WATERSTOP MUST MEET OR EXCEED THE PERFORMANCE REQUIRED IN SPECIFICATIONS, INCLUDING THE U.S. ARMY CORPS OF ENGINEERS CRD-C-572-74.
9. WATERSTOPS ARE TO BE PROPERLY POSITIONED PRIOR TO CONCRETE PLACEMENT AND MUST BE SECURELY POSITIONED IN THE FORMS BY TYING OFF THE OUTER EDGE OF THE WATERSTOP TO ADJACENT REINFORCING STEEL.

8 RIBBED PVC WATERSTOP SCHEDULE
NO SCALE

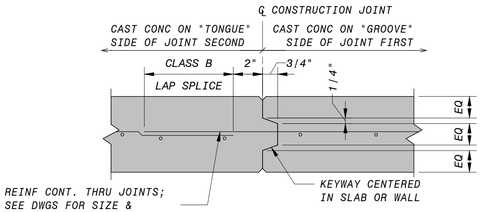

SINGLE LAYER REINF.

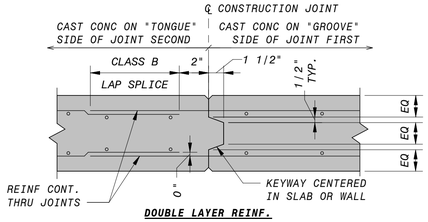

DOUBLE LAYER REINF.

NOTES:
1. COORDINATE LOCATIONS WITH EOR PRIOR TO PLACEMENT.
2. SANDBLAST OR WATER BLAST JOINT AND REINFORCEMENT PRIOR TO PLACING CONCRETE FOR NEXT SLAB OR WALL.
3. FOR WALLS, FORM ALL JOINTS WITH 1/4" CHAMFER.
4. FOR SLABS, EDGE TOP OF EXPOSED SLAB JOINT EDGES TO 1/4" RADIUS.

7 CONSTRUCTION JOINT AT WALL OR SLAB (NON-WATER BEARING ONLY)
NO SCALE

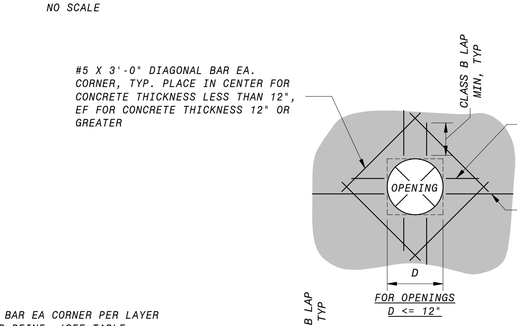

THICKNESS OF CONCRETE	BAR SIZE	BAR LENGTH RECTANGULAR OPNG	BAR LENGTH CIRCULAR OPNG
< 12"	5	3'-6"	D+24"
12" TO 18"	5	3'-6"	D+24"
> 18"	6	4'-0"	D+24"

NOTES:
1. 50% OF INTERRUPTED WALL OR SLAB REINF. TO BE PLACED EA. SIDE OF OPENING. BARS TO BE SPACED AT 4" OC OR S/2, WHICHEVER IS LESS EA. FACE (S = BAR SPACING PER PLANS). LENGTH OF ADD'L. REINF. = H + W + (2X CLASS B LAP)
2. SEE PLAN AND SECTIONS FOR TYP. REINF., REINF. SPACING AND WALL OR SLAB THICKNESS.
3. ALL WALL AND/OR SLAB OPENINGS TO BE COORDINATED AND DETAILED ON REINF. SHOP DRAWINGS.
4. ADD'L. OPENINGS SHALL NOT BE PROVIDED W/O EOR APPROVAL.
5. THIS DETAIL SHALL APPLY AT ALL SIDES OF WALL OR SLAB OPENINGS AND/OR DISCONTINUITIES. APPLICABLE REINF. TO BE SHOWN ON SHOP DRAWINGS.
6. DO NOT CORE HOLES THROUGH STRUCTURAL WALLS OR SLABS WITHOUT PRIOR APPROVAL FROM EOR.
7. 2" CLEAR TO CONCRETE OPENINGS OR OUTSIDE FACE OF PIPES AND PIPE SLEEVES. DO NOT OVERCUT REINFORCEMENT FOR EASIER PLACEMENT OF WEEP RINGS AND FLANGES.
8. U BARS MAY BE REPLACED WITH STRAIGHT BARS AT CONCRETE WITH SINGLE MAT OF REINFORCEMENT.
9. B = CLASS B LAP SPLICE

9 TYP REINF AT WALL OR SLAB OPENINGS (<=54")
NO SCALE

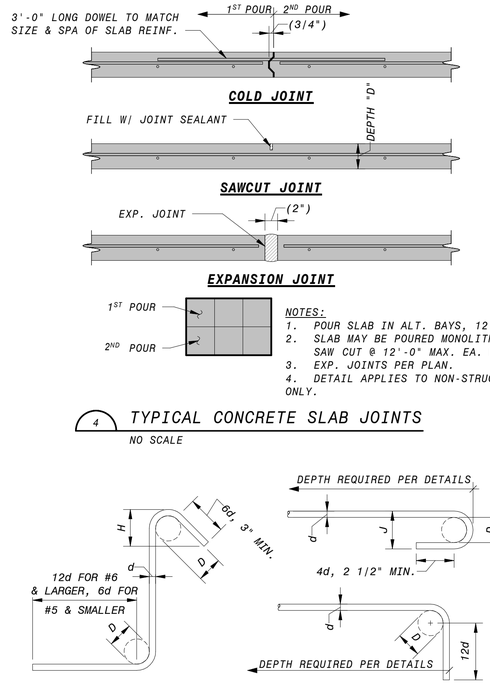

NOTES:
1. POUR SLAB IN ALT. BAYS, 12'-0" SQ. MAX.
2. SLAB MAY BE POURED MONOLITHICALLY IF SAW CUT @ 12'-0" MAX. EA. WAY
3. EXP. JOINTS PER PLAN.
4. DETAIL APPLIES TO NON-STRUCTURAL SLABS ONLY.

4 TYPICAL CONCRETE SLAB JOINTS
NO SCALE

STANDARD TIES & STIRRUPS

BAR SIZE	D	H (APPROX.)
#3	1-1/2"	3"
#4	2"	3"
#5	2-1/2"	3-3/4"
#6	4-1/2"	4-1/2"
#7	5-1/4"	5-1/4"
#8	6"	6"

STANDARD END HOOKS

BAR SIZE	D	J
#3	2-1/4"	3"
#4	3"	4"
#5	3-3/4"	5"
#6	4-1/2"	6"
#7	5-1/4"	7"
#8	6"	8"
#9	9 1/2"	11 3/4"
#10	10 3/4"	1' 1 1/4"

NOTE:
ALL BAR BEND DIAMETERS & END LENGTHS MUST CONFORM TO THE CRSI MANUAL OF STANDARD PRACTICE

5 TYP. REINFORCEMENT BAR BENDS
NO SCALE

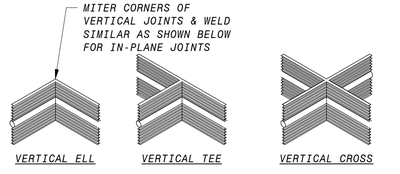

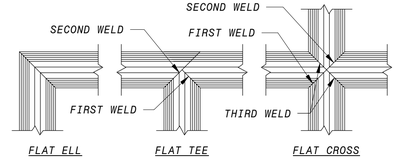

NOTES:
1. ALL WELDS SHALL BE PER WATERSTOP MANUFACTURER'S RECOMMENDATIONS.
2. ALL TRANSITIONS, INTERSECTIONS, AND SPLICES ARE TO BE HEAT WELDED TO MAINTAIN CONTINUITY. FACTORY-MADE FABRICATIONS ARE REQUIRED FOR ALL INTERSECTIONS AND CHANGES OF DIRECTION.
3. FIELD SPLICES ARE ONLY ACCEPTABLE IN STRAIGHT SECTIONS.

6 WATERSTOP JOINTS
NO SCALE

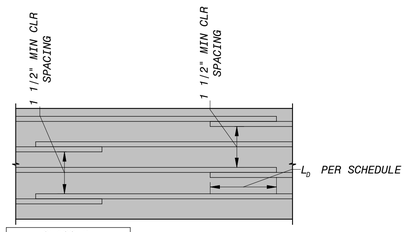

	BAR SIZE	CLASS B TENSION, L_D LAP SPLICE LENGTH	HOOKED, L_{DH}	
TYPICAL - f'c = 3 ksi	#3	28"	9"	VALUES ASSUME 60 KSI, NON-EPOXY REINFORCEMENT & 3 KSI NORMAL WEIGHT CONCRETE
	#4	37"	11"	
	#5	46"	14"	
	#6	56"	17"	
	#7	81"	20"	
	#8	93"	22"	
	#9	104"	25"	
	#10	116"	28"	
TYPICAL - f'c = 4 ksi	BAR SIZE	TENSION, L_D LAP SPLICE LENGTH	HOOKED, L_{DH}	
	#3	24"	8"	VALUES ASSUME 60 KSI, NON-EPOXY REINFORCEMENT & 4 KSI NORMAL WEIGHT CONCRETE
	#4	32"	10"	
	#5	40"	12"	
	#6	48"	15"	
	#7	70"	17"	
	#8	80"	19"	
	#9	90"	22"	
	#10	100"	24"	
TYPICAL - f'c = 4.5 ksi	BAR SIZE	TENSION, L_D LAP SPLICE LENGTH	HOOKED, L_{DH}	
	#3	23"	7"	VALUES ASSUME 60 KSI, NON-EPOXY REINFORCEMENT & 4.5 KSI NORMAL WEIGHT CONCRETE
	#4	30"	9"	
	#5	38"	12"	
	#6	45"	14"	
	#7	66"	16"	
	#8	76"	18"	
	#9	85"	21"	
	#10	94"	23"	

1 STD LAP SPLICES
NO SCALE

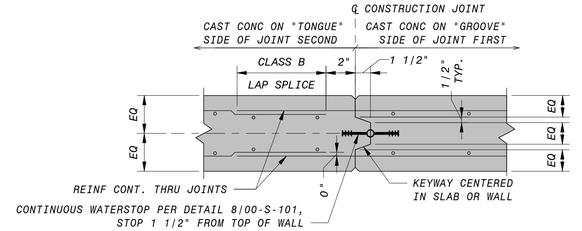

NOTES:
1. COORDINATE LOCATIONS WITH EOR PRIOR TO PLACEMENT.
2. SANDBLAST OR WATER BLAST JOINT AND REINFORCEMENT PRIOR TO PLACING CONCRETE FOR NEXT SLAB OR WALL.
3. FOR WALLS, FORM ALL JOINTS WITH 1/4" CHAMFER.
4. FOR SLABS, EDGE TOP OF EXPOSED SLAB JOINT EDGES TO 1/4" RADIUS.

2 CONSTRUCTION JOINT AT WALL OR SLAB (WATER BEARING)
NO SCALE

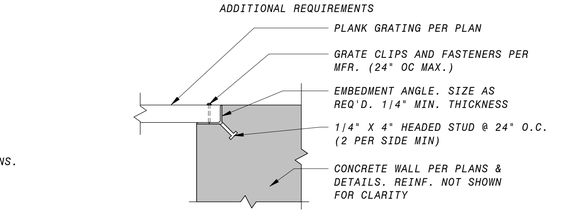

3 PLANK GRATING SEAT
NO SCALE

90% SUBMITTAL - NOT FOR CONSTRUCTION

NO.	BY	CHK	APP	DATE	REVISIONS AND RECORD OF USE

REGISTERED PROFESSIONAL ENGINEER CHARLES R. ASHLEY JR. S 5258 STRUCTURAL STATE OF CALIFORNIA

Ashley & Vance ENGINEERING, INC

BLACK & VEATCH

FILANC

JOINT VENTURE

CITY OF MORRO BAY
FILANC BLACK & VEATCH DB PROPOSAL
WATER RECLAMATION FACILITY (WRF)

GENERAL
STRUCTURAL
STANDARD DETAILS

DESIGNED: M. MARSH
DETAILED: S. BENJAMIN
CHECKED: I. SHOEBRIDGE
APPROVED: C. ASHLEY
DATE: XX/XX/XXXX

0 1/2 1
IF THIS BAR DOES NOT MEASURE 1" THEN DRAWING IS NOT TO FULL SCALE

PROJECT NO. 400530

00-S-101
SHEET OF XXX

PLOTTED: 3/24/2020 10:53:34 AM
D400530

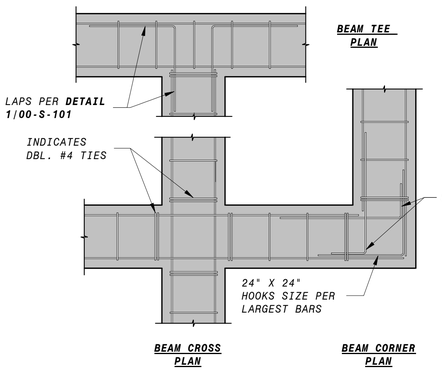

12 BEAM TO BEAM CONECTIONS
NO SCALE

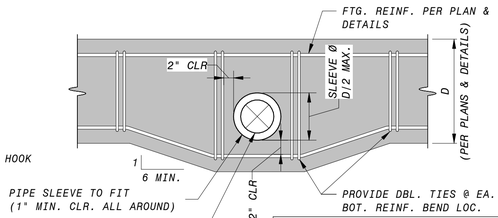

DO NOT LOCATE PENETRATIONS WITHIN 24" OF ANY HOLDOWNS OR ANCHOR BOLTS

ALL PENETRATIONS SHALL BE COORDINATED W/ EOR PRIOR TO CONCRETE POUR.

TIES:
SIZE, SHAPE AND SPACING PER PLAN & DETAILS. SEE BELOW IF NO TIES ARE INDICATED.
FTG. REINF. = (1) BAR T&B, USE #4 VERT. W/ 180° HOOK EA. END
FTG. REINF. > (1) BAR T&B, USE #4 STIRRUP W/ 135° HOOKS @ TOP

8 TYP. DUCT THROUGH FDN.
NO SCALE

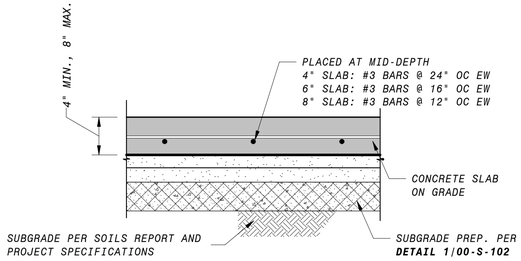

4 TYP CONCRETE STOOP
NO SCALE

REFER TO SOILS REPORT FOR ADDITIONAL REQUIREMENTS & RECOMMENDATIONS. ALL SPLICES IN MAT SLAB FOUNDATION TO BE CLASS B.

VAPOR RETARDER AND SAND LAYER REQUIRED FOR THE FOLLOWING AREAS: WATER COLLECTION SUPPLY AND STORAGE SHED [16], RO/UV BUILDING [50], ELECTRICAL BUILDING [80], CHEMICAL FACILITY [90], OPERATIONS BUILDING [95], AND MAINTENANCE BUILDING [96].

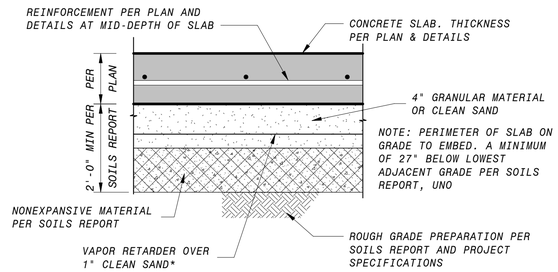

THE SOIL BENEATH SAND & VAPOR RETARDER SHALL BE PREMOISTENED TO A MINIMUM DEPTH AND % OF OPTIMUM MOISTURE CONTENT SPECIFIED BY THE SOIL ENGINEER OF RECORD, WHO SHALL TEST AND APPROVE PRIOR TO SLAB CONSTRUCTION.

*IF CLASS "A" VAPOR RETARDER IS USED, 1" PROTECTIVE SAND LAYER BELOW MAY BE OMITTED.

1 TYP. SLAB ON GRADE
NO SCALE

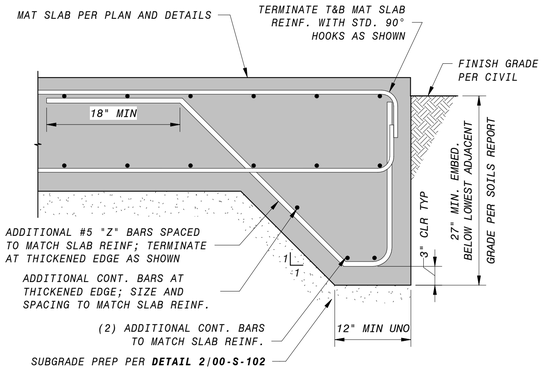

13 TYP THICKENED MAT SLAB EDGE
NO SCALE

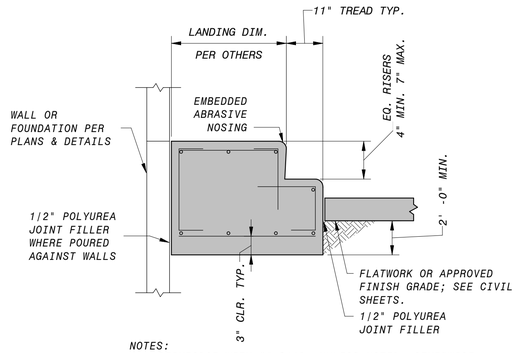

NOTES:
1. REINFORCE WITH #5 @12", UNLESS NOTED OTHERWISE
2. SUBGRADE PREP PER **DETAIL 1/00-S-102**.

9 CONCRETE STAIR - ON GRADE
NO SCALE

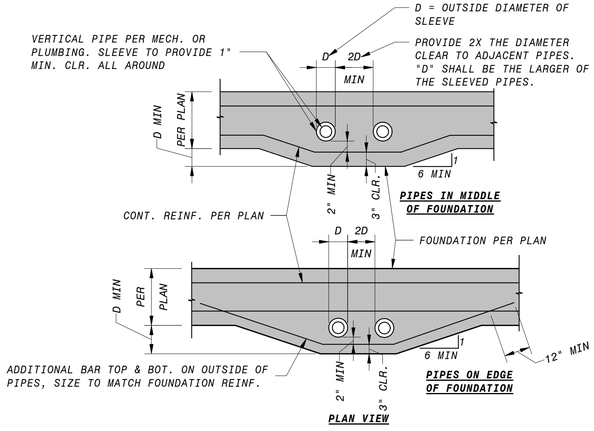

5 TYPICAL VERTICAL PIPES IN FDN.
NO SCALE

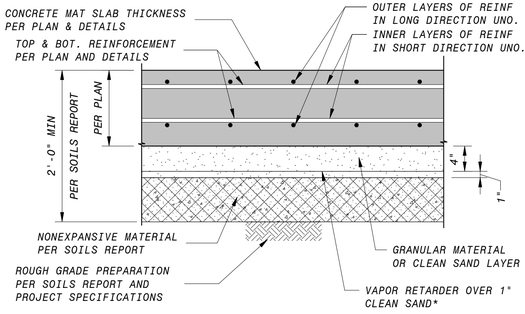

THE SOIL BENEATH SAND & VAPOR RETARDER SHALL BE PREMOISTENED TO A MINIMUM DEPTH AND % OF OPTIMUM MOISTURE CONTENT SPECIFIED BY THE SOIL ENGINEER OF RECORD, WHO SHALL TEST AND APPROVE PRIOR TO SLAB CONSTRUCTION.

*IF CLASS "A" VAPOR RETARDER IS USED, 1" PROTECTIVE SAND LAYER BELOW MAY BE OMITTED.

2 TYP. MAT SLAB ON GRADE
NO SCALE

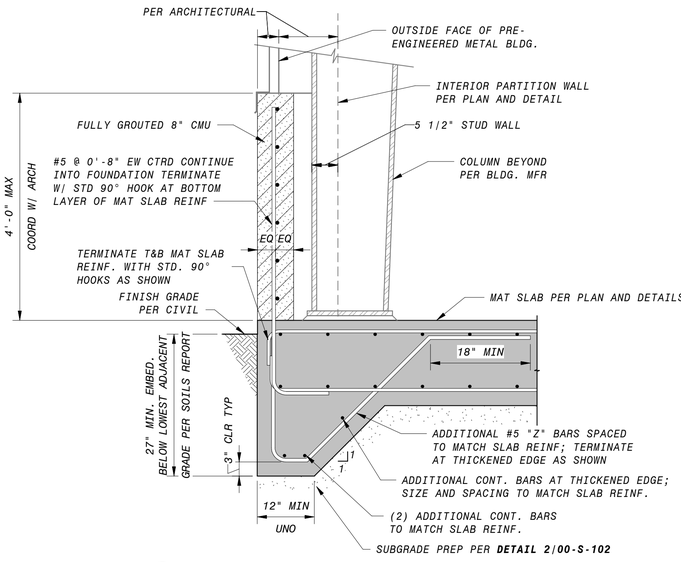

11 TYP CMU WAINSCOT DETAIL
NO SCALE

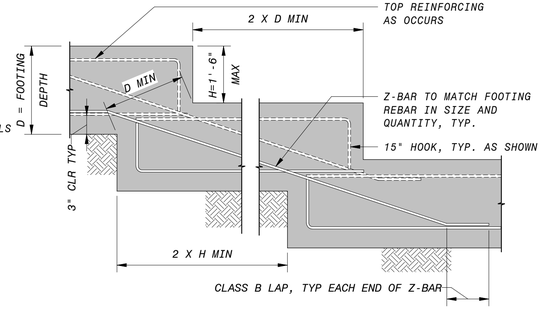

NOTE: NO FOUNDATION SHALL EXCEED A 1:10 SLOPE, STEP FOUNDATION AS REQ'D IN FIELD

10 TYPICAL STEPPED FOUNDATION
NO SCALE

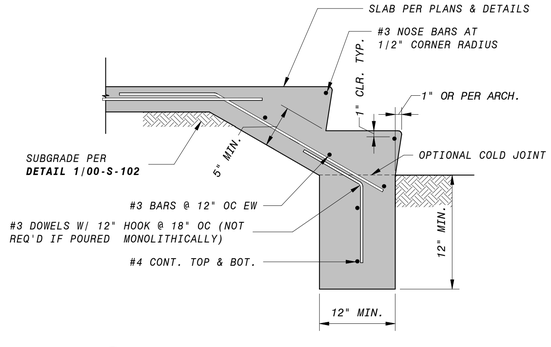

6 CONCRETE STAIR AT LANDING EDGE
NO SCALE

90% SUBMITTAL - NOT FOR CONSTRUCTION

NO.	BY	CHK	APP	DATE	REVISIONS AND RECORD OF USE

REGISTERED PROFESSIONAL ENGINEER CHARLES R. ASHLEY JR. S 5258 STRUCTURAL STATE OF CALIFORNIA

Ashley & Vance ENGINEERING, INC
JOINT VENTURE
BLACK & VEATCH
FILANC

CITY OF MORRO BAY
FILANC BLACK & VEATCH DB PROPOSAL
WATER RECLAMATION FACILITY (WRF)

GENERAL
STRUCTURAL
STANDARD DETAILS

DESIGNED:	M. MARSH
DETAILED:	S. BENJAMIN
CHECKED:	I. SHOEBRIDGE
APPROVED:	C. ASHLEY
DATE:	XX/XX/XXXX

0 1/2 1
IF THIS BAR DOES NOT MEASURE 1" THEN DRAWING IS NOT TO FULL SCALE

PROJECT NO. 400530

00-S-102
SHEET OF XXX

PLOTTED: 3/24/2020 10:53:38 AM
D400530

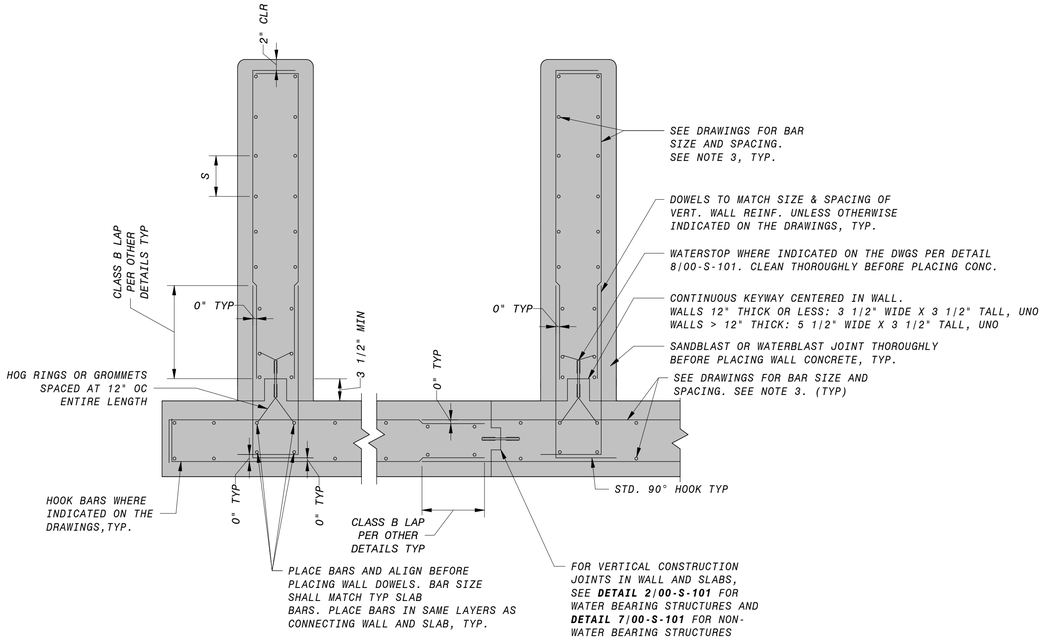

NOTES:
1. "S" = BAR SPACING INDICATED ON THE DRAWINGS.
2. HOOKS SHALL BE STD 90° HOOKS.
3. ORIENTATION OF BARS IN LAYERS SHALL BE AS INDICATED ON THE DRAWINGS.
4. SEE DETAIL 5/00-S-103 THIS SHEET FOR ALTERNATIVE TO FORMED KEYWAY.

2 WALL AND SLAB JOINTS WITH WATERSTOP
NO SCALE

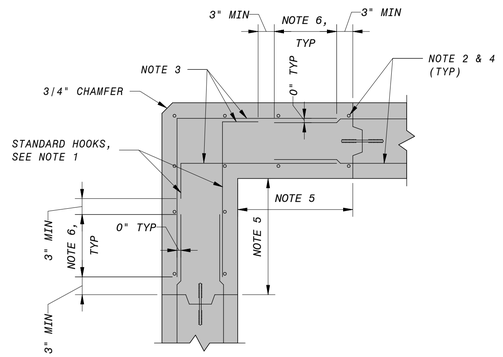

A - DETAIL - CORNER FOR DOUBLE MAT

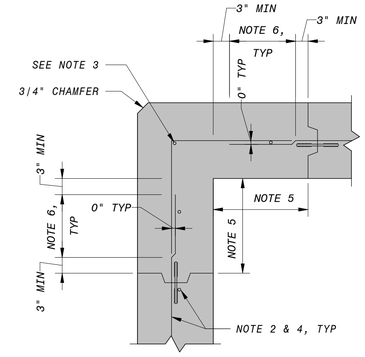

B - DETAIL - CORNER FOR SINGLE MAT

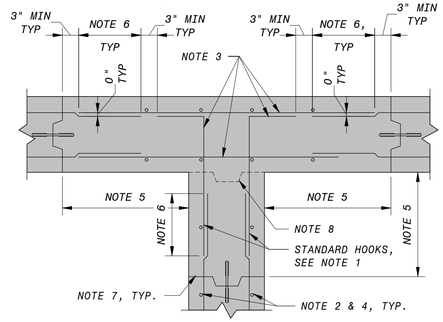

C - DETAIL - INTERSECTION FOR DOUBLE MAT

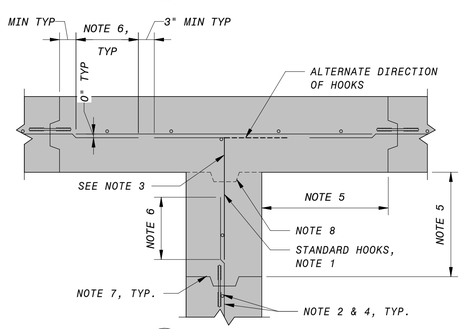

D - DETAIL - INTERSECTION FOR SINGLE MAT

NOTES:
1. HOOKS SHALL BE STANDARD 90° HOOKS.
2. ORIENTATION OF BAR LAYERS SHALL BE AS INDICATED ON THE DRAWINGS.
3. BAR SIZE SHALL MATCH LARGEST BARS IN CONNECTING WALL. PLACE BAR IN SAME LAYERS AS CONNECTING WALLS. (TYP)
4. SEE DRAWINGS FOR BAR SIZE AND SPACING.
5. DISTANCE FROM INSIDE CORNER FACE TO NEAREST VERTICAL CONSTRUCTION JOINT. DIMENSION AS DENOTED IN DETAIL WITH 6" MIN AND 30'-0" MAX FOR LIQUID CONTAINING STRUCTURES OR 40'-0" MAX IN OTHER STRUCTURES. AT "T" INTERSECTIONS WHERE A WATERSTOP IS NOT REQUIRED THIS DIMENSION MAY BE ZERO.
6. OPTIONAL SPLICE LOCATION UNO. CLASS B LAP SPLICE PER OTHER DETAILS, MIN.
7. VERTICAL CONSTRUCTION JOINT NEAREST WALL CORNER WITH WATERSTOP AS REQUIRED AT ALL LIQUID CONTAINING STRUCTURES.
8. ALTERNATE VERTICAL CONSTRUCTION JOINT AT "T" INTERSECTIONS WHERE WATERSTOP ARE NOT REQUIRED.

1 HORIZONTAL WALL REINFORCEMENT AT CORNERS AND INTERSECTIONS
NO SCALE

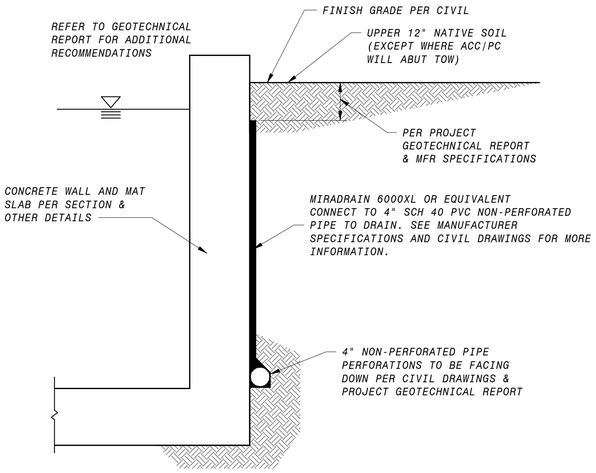

4 DRAINED CONDITIONS - OPTION B
NO SCALE

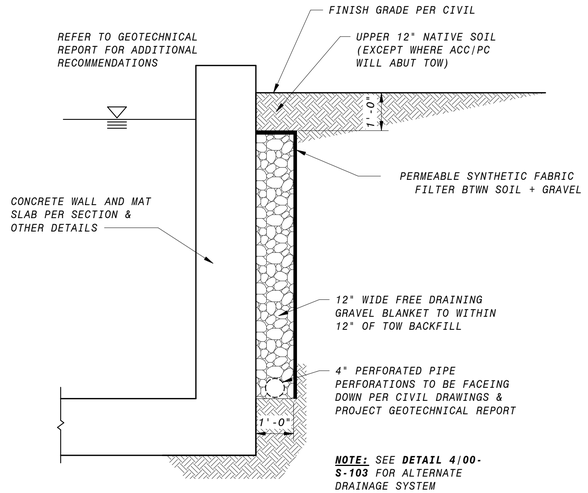

3 DRAINED CONDITIONS - OPTION A
NO SCALE

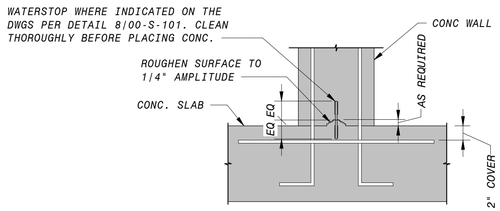

SLAB TO BOTTOM OF WALL

NOTES:
1. REINFORCING STEEL IS CONTINUOUS THROUGH ALL CONSTRUCTION JOINTS

5 TYPICAL CONSTRUCTION JOINTS
NO SCALE

90% SUBMITTAL - NOT FOR CONSTRUCTION

NO.	BY	CHK	APP	DATE	REVISIONS AND RECORD OF USE

REGISTERED PROFESSIONAL ENGINEER CHARLES R. ASHLEY JR. S 5258 STRUCTURAL STATE OF CALIFORNIA

Ashley & Vance ENGINEERING, INC
JOINT VENTURE
BLACK & VEATCH
FILANC

CITY OF MORRO BAY
FILANC BLACK & VEATCH DB PROPOSAL
WATER RECLAMATION FACILITY (WRF)

GENERAL
STRUCTURAL
STANDARD DETAILS

DESIGNED: M. MARSH
DETAILED: S. BENJAMIN
CHECKED: I. SHOEBRIDGE
APPROVED: C. ASHLEY
DATE: XX/XX/XXXX

0 1/2 1
IF THIS BAR DOES NOT MEASURE 1" THEN DRAWING IS NOT TO FULL SCALE

PROJECT NO. 400530

00-S-103
SHEET OF XXX

PLOTTED: 3/24/2020 10:53:37 AM
D400530

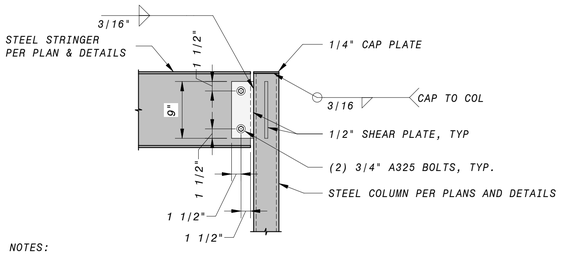

NOTES:
1. CORROSION PROTECTION REQUIRED AT DISSIMILAR METALS.
2. ALL STEEL ELEMENTS TO BE GALVANIZED, UNO.
3. REFER TO SPECIFICATIONS FOR FINISH REQUIREMENTS. ALL EXPOSED WELDS TO BE GROUND SMOOTH.
4. REPAIR ALL DAMAGED COATINGS.
5. INFORMATION SHOWN IS FOR REFERENCE ONLY. STAIR DESIGN SHALL BE PER THE STAIR SUPPLIER AND SPECIFICATION SECTION 05 50 13.

9 STEEL CHANNEL TO COLUMN

NO SCALE

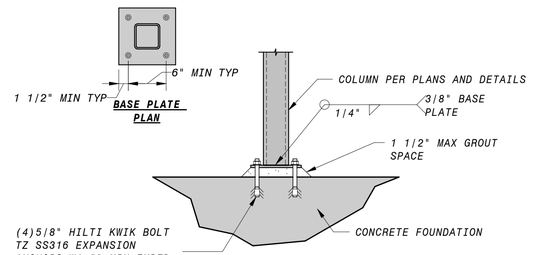

NOTES:
1. CORROSION PROTECTION REQUIRED AT DISSIMILAR METALS.
2. ALL STEEL ELEMENTS TO BE GALVANIZED, UNO.
3. REFER TO SPECIFICATIONS FOR FINISH REQUIREMENTS. ALL EXPOSED WELDS TO BE GROUND SMOOTH.
4. REPAIR ALL DAMAGED COATINGS.
5. TAKE CARE TO NOT HIT (E) REINFORCEMENT.

10 STEEL COLUMN TO MAT SLAB

NO SCALE

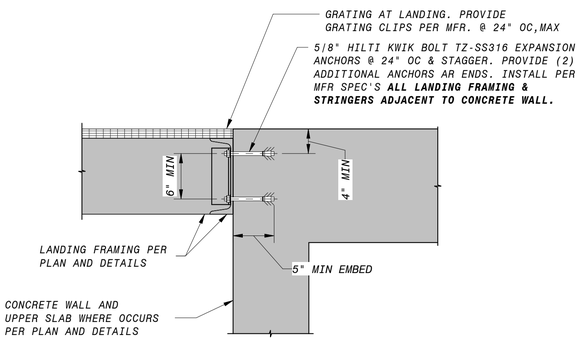

NOTES:
1. CORROSION PROTECTION REQUIRED AT DISSIMILAR METALS.
2. ALL STEEL ELEMENTS TO BE GALVANIZED, UNO.
3. REFER TO SPECIFICATIONS FOR FINISH REQUIREMENTS. ALL EXPOSED WELDS TO BE GROUND SMOOTH.
4. REPAIR ALL DAMAGED COATINGS.
5. TAKE CARE TO NOT HIT (E) REINFORCEMENT.

11 FRAMING TO CONCRETE WALL AT LANDING

NO SCALE

ALL RAILINGS TO BE SIDE MOUNT, UNO. SEE DETAIL 2/00-S-104 FOR TOP MOUNT ANCHORAGE.

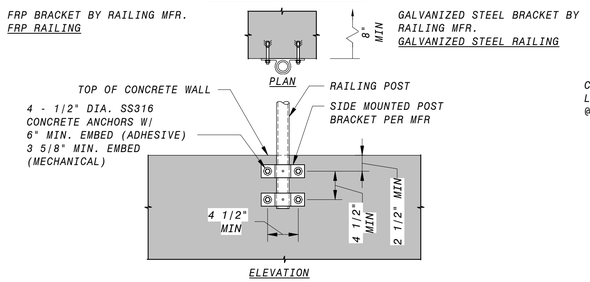

NOTES:
1. DO NOT CUT REINFORCING WITHOUT PRIOR CONSENT FROM EOR.
2. ANCHORAGE TO 4000 PSI MIN CONCRETE 2-1/2" MIN EDGE DISTANCE TO ANCHOR.
3. PROVIDE PROTECTION FOR DISSIMILAR METALS AND CONCRETE PER SPECIFICATION.
4. CONCRETE ANCHOR SIZE AND EMBEDMENTS CALCULATED FOR HILTI ADHESIVES, RE-500-V3, AND HILTI MECHANICAL ANCHORS KBTZ. IF ALTERNATIVE ANCHOR SYSTEM IS USED, SUBMIT STAMPED CALCULATIONS AND DRAWINGS.
5. CARE TO BE TAKEN NOT TO HIT (E) REINF.
6. USE SIDE MOUNTED POST BRACKET AS A TEMPLATE FOR THE ANCHOR BOLTS.

6 RAILING POST ANCHORAGE - CONCRETE SIDE MOUNT

NO SCALE

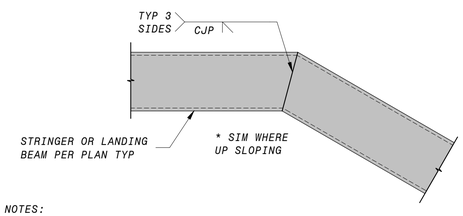

NOTES:
1. CORROSION PROTECTION REQUIRED AT DISSIMILAR METALS.
2. ALL STEEL ELEMENTS TO BE GALVANIZED, UNO.
3. REFER TO SPECIFICATIONS FOR FINISH REQUIREMENTS. ALL EXPOSED WELDS TO BE GROUND SMOOTH.
4. REPAIR ALL DAMAGED COATINGS.
5. INFORMATION SHOWN IS FOR REFERENCE ONLY. STAIR DESIGN SHALL BE PER THE STAIR SUPPLIER AND SPECIFICATION SECTION 05 50 13.

7 TYPICAL STRINGER BEND

NO SCALE

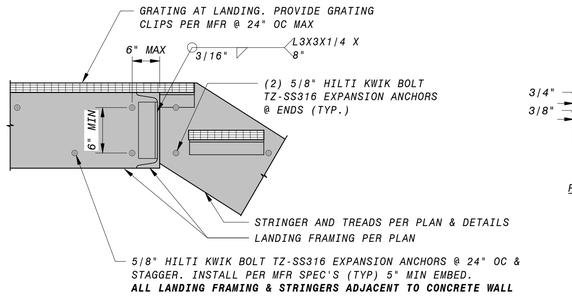

NOTES:
1. CORROSION PROTECTION REQUIRED AT DISSIMILAR METALS.
2. ALL STEEL ELEMENTS TO BE GALVANIZED, UNO.
3. REFER TO SPECIFICATIONS FOR FINISH REQUIREMENTS. ALL EXPOSED WELDS TO BE GROUND SMOOTH.
4. REPAIR ALL DAMAGED COATINGS.
5. TAKE CARE TO NOT HIT (E) REINFORCEMENT.
6. 4" MIN EDGE DISTANCE FROM ALL CONCRETE EDGES.
7. INFORMATION SHOWN IS FOR REFERENCE ONLY. STAIR DESIGN SHALL BE PER THE STAIR SUPPLIER AND SPECIFICATION SECTION 05 50 13.

8 FRAMING TO CONCRETE WALL

NO SCALE

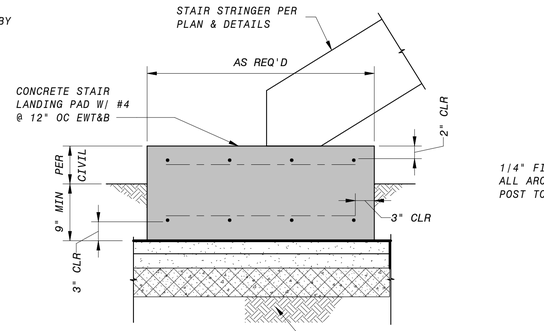

4 CONCRETE STAIR LANDING

NO SCALE

ALL HANDRAILS AND GUARDRAILS SHALL BE GALVANIZED STEEL UNLESS SPECIFICALLY NOTED OTHERWISE.

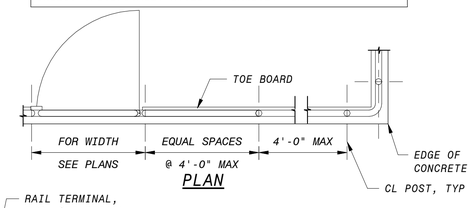

PLAN

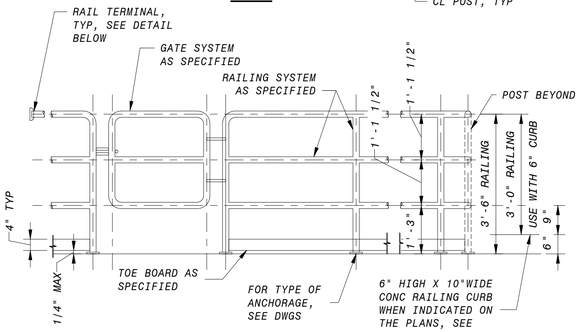

ELEVATION

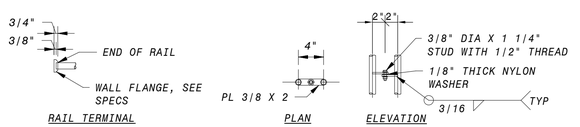

NOTES:
1. FASTEN RAIL TO WALL FLANGE PER MANUFACTURER'S RECOMMENDATIONS.
2. WALL FLANGE TO BE MOUNTED TO WALL WITH (2) 3/8" DIA SS316 WEDGE ANCHORS.
3. AT DESIGN BUILDER'S OPTION, FABRICATE HINGES OR PROVIDE OTHER HINGES AS SPECIFIED.
4. RAILING DESIGN SHALL BE PER MANUFACTURER AND SHALL MEET THE LATEST OSHA AND CBC REQUIREMENTS.
5. RAILING MATERIAL AND FABRICATION SHALL BE AS INDICATED ON DESIGN DRAWINGS AND IN THE PROJECT SPECIFICATIONS FOR HANDRAILING AND GUARDRAILING.
6. THE GUARDRAIL AND HANDRAIL CONFIGURATIONS INCLUDED IN THESE DESIGN DRAWINGS WILL NOT SATISFY ADA REQUIREMENTS FOR HANDICAPPED ACCESSIBILITY. WHERE THE DRAWINGS SPECIFICALLY NOTE CONFORMANCE WITH ADA STANDARDS IS REQUIRED, THE RAILING SUPPLIER SHALL MODIFY THE CONFIGURATIONS TO MEET THE MOST STRINGENT ACCESSIBILITY STANDARDS APPLICABLE TO THE PROJECT.

5 RAILING - 3 RAIL GUARDRAIL

NO SCALE

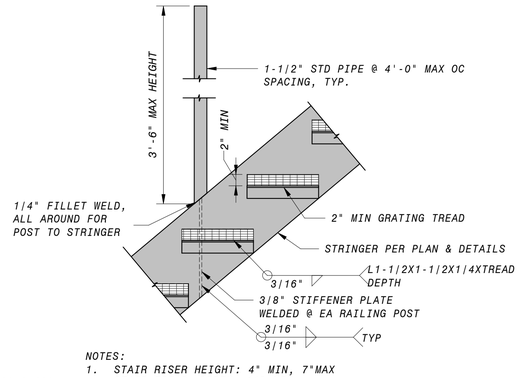

NOTES:
1. STAIR RISER HEIGHT: 4" MIN, 7"MAX
   STAIR TREAD DEPTH: 11" MIN
   DESIGN-BUILDER TO COORDINATE TREAD RISE/RUN WITH PROPOSED ELEVATIONS AND FIELD CONDITIONS. CORROSION PROTECTION REQUIRED AT DISSIMILAR METALS.
2. ALL STEEL ELEMENTS TO BE GALVANIZED, UNO.
3. REFER TO SPECIFICATIONS FOR FINISH REQUIREMENTS. ALL EXPOSED WELDS TO BE GROUND SMOOTH.
4. REPAIR ALL DAMAGED COATINGS.
5. INFORMATION SHOWN IS FOR REFERENCE ONLY. STAIR DESIGN SHALL BE PER THE STAIR SUPPLIER AND SPECIFICATION 05 50 13.

1 TYPICAL STAIR STRINGER & TREADS

NO SCALE

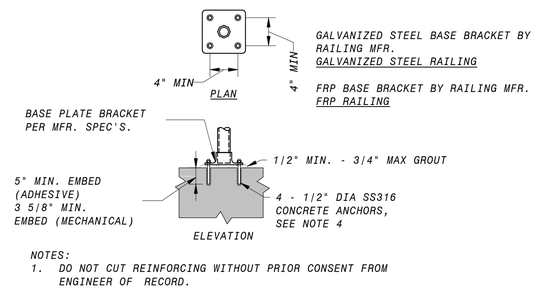

NOTES:
1. DO NOT CUT REINFORCING WITHOUT PRIOR CONSENT FROM ENGINEER OF RECORD.
2. ANCHORAGE TO 4000 PSI CONCRETE CURB. 3" MINIMUM EDGE DISTANCE TO ANCHOR.
3. PROVIDE PROTECTION FOR DISSIMILAR METALS AND CONCRETE PER SPECIFICATIONS.
4. CONCRETE ANCHOR SIZE AND EMBEDMENTS CALCULATED FOR HILTI ADHESIVES, RE-500-V3, AND HILTI MECHANICAL ANCHORS KBTZ. IF ALTERNATIVE ANCHOR SYSTEM IS USED, DESIGN-BUILDER TO SUBMIT STAMPED CALCULATIONS AND DRAWINGS.
5. CARE TO BE TAKEN NOT TO HIT (E) REINF.

2 RAILING POST ANCHORAGE - CONCRETE TOP MOUNT

NO SCALE

NOTES:
1. ALL STEEL ELEMENTS TO BE GALVANIZED, UNO.
2. REFER TO SPECIFICATIONS FOR FINISH REQUIREMENTS. ALL EXPOSED WELDS TO BE GROUND SMOOTH.
3. TAKE CARE TO NOT HIT (E) REINFORCEMENT.
4. REPAIR ALL DAMAGED COATINGS.

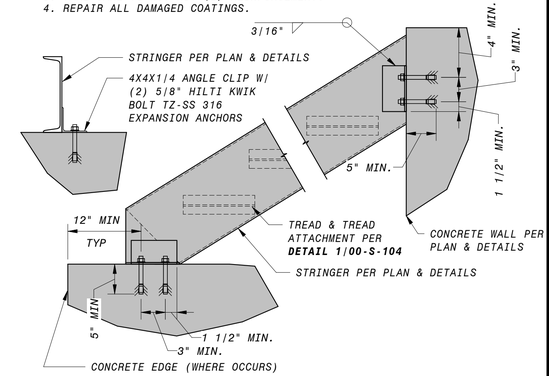

3 STRINGER TO CONCRETE

NO SCALE

90% SUBMITTAL - NOT FOR CONSTRUCTION

NO.	BY	CHK	APP	DATE	REVISIONS AND RECORD OF USE

REGISTERED PROFESSIONAL ENGINEER CHARLES R. ASHLEY JR. S 5258 STRUCTURAL STATE OF CALIFORNIA

Ashley & Vance ENGINEERING, INC
JOINT VENTURE
BLACK & VEATCH
FILANC

CITY OF MORRO BAY
FILANC BLACK & VEATCH DB PROPOSAL
WATER RECLAMATION FACILITY (WRF)

GENERAL
STRUCTURAL
STANDARD DETAILS

DESIGNED:	M. MARSH
DETAILED:	S. BENJAMIN
CHECKED:	I. SHOEBRIDGE
APPROVED:	C. ASHLEY
DATE:	XX/XX/XXXX

0 1/2 1
IF THIS BAR DOES NOT MEASURE 1" THEN DRAWING IS NOT TO FULL SCALE

PROJECT NO. 400530

00-S-104
SHEET OF XXX

PLOTTED: 3/24/2020 10:53:38 AM
D400530

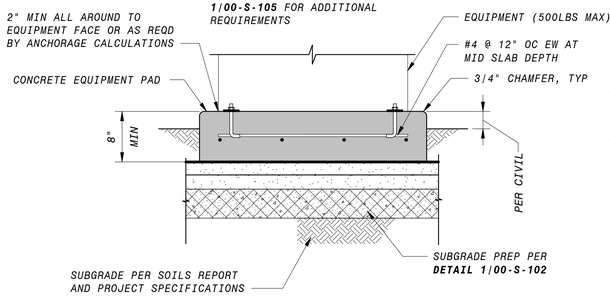

10 TYP EXTERIOR EQUIPMENT PAD

NO SCALE

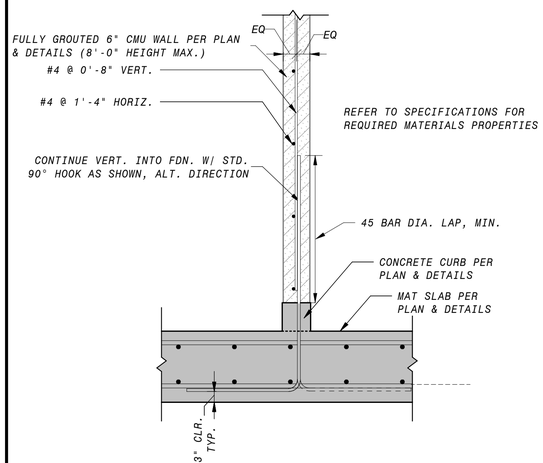

6 CMU SEPARATION WALL

NO SCALE

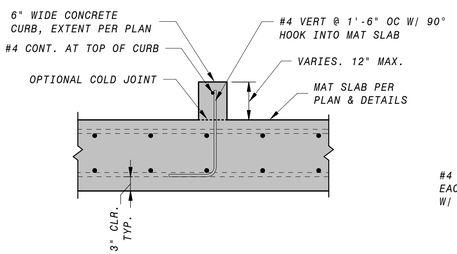

7 CONCRETE CURB AT MAT SLAB

NO SCALE

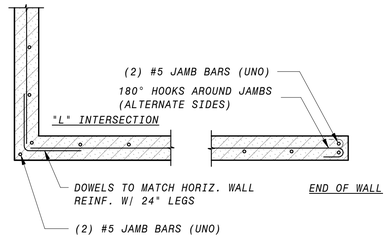

8 TYP CMU WALL INTERSECTIONS

NO SCALE

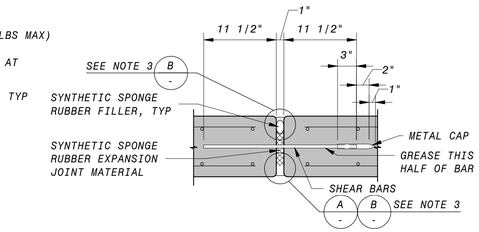

NON-WATER BEARING SLAB OR WALL

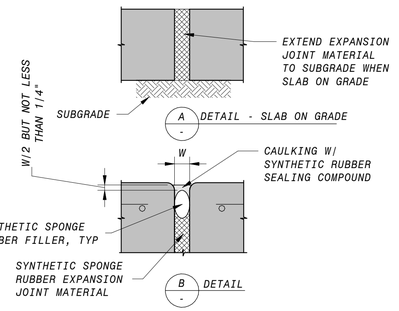

NOTES:
1. FOR WALLS AND EXPOSED SLABS EDGES, FORM ALL JOINT EDGES AT 1/4" CHAMFER.
2. "W" = 1" UNLESS OTHERWISE INDICATED ON THE DRAWINGS. MIN JOINT WIDTH = 3/8".
3. USE DETAIL "A" AT UNDERSIDE OF SLABS ON GRADE ONLY. USE DETAIL "B" AT ALL OTHER LOCATIONS.
4. PROVIDE 3/4" SHEAR BARS @ 1'-6" CTRS ACROSS JOINT UNLESS NOTED OTHERWISE.
5. REINFORCING STEEL SHALL NOT BE EXTENDED ACROSS JOINT UNLESS NOTED OTHERWISE.
6. SHEAR BARS SHALL BE SMOTH FREE FROM RUST OR SCALE, AND GREASED TO PREVENT BOND (ONE HALF OF BAR ONLY).

5 EXPANSION JOINT

NO SCALE

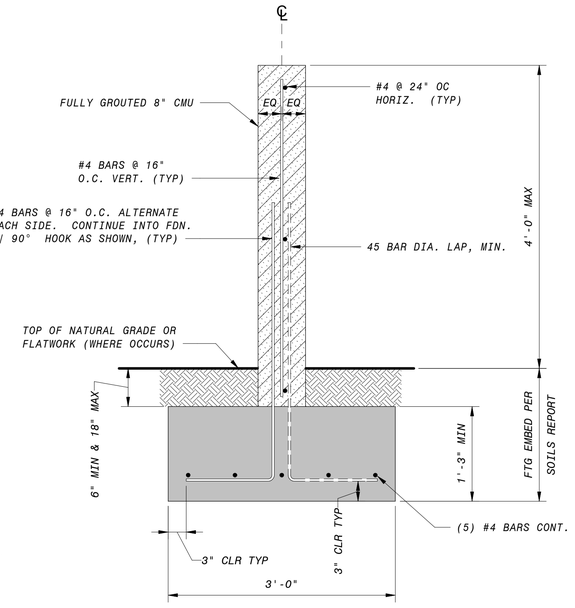

4 CMU PATIO WALL

NO SCALE

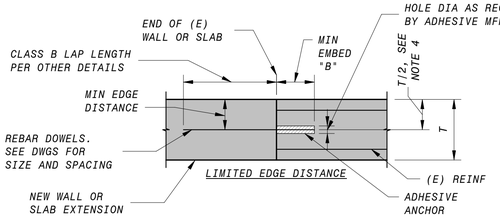

LIMITED EDGE DISTANCE

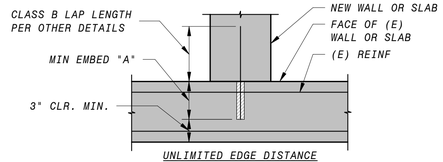

UNLIMITED EDGE DISTANCE

DOWEL SIZE	MIN EDGE DISTANCE	MIN EMBED A	MIN EMBED B
#3	2 5/8"	5 5/8"	8 1/4"
#4	3 1/2"	7 1/2"	11"
#5	4 3/8"	9 3/8"	13 3/4"
#6	5 1/4"	11 1/4"	16 1/2"
#7	6 1/8"	13 1/8"	19 1/4"
#8	7"	15"	22"
#9	7 7/8"	16 7/8"	24 3/4"

NOTE:
1. SPECIAL INSPECTION REQUIRED IN ACCORDANCE WITH THE CURRENT EDITION OF THE CALIFORNIA BUILDING CODE AND PRODUCT ESR REPORT.
2. FOLLOW ADHESIVE MANUFACTURER'S INSTRUCTIONS & ESR REPORT FOR INSTALLATION.
3. USE MINIMUM EMBEDMENTS SHOWN, EXCEPT USE MANUFACTURER'S MINIMUM RECOMMENDED EMBEDMENT IF GREATER.
4. LOCATE DOWELS CENTERED IN WALL OR SLAB UNLESS OTHERWISE NOTED ON DRAWINGS. WHERE 2 ROWS OF DOWELS INDICATED, STAGGER SPACING & LOCATE ALTERNATING DOWELS AT MINIMUM EDGE DISTANCE FROM OPPOSITE FACES.
5. CARE SHALL BE TAKEN TO AVOID EXISTING REINFORCEMENT.
6. COORDINATE WITH DESIGN-BUILDER PRIOR TO DOWELING. EDGE DISTANCE AND EMBEDMENT MAY VARY DEPENDING ON CONDITION.
7. ADHESIVE MAY BE HILTI HIT-RE 500 V3 OR SIMPSON SET-3G.
8. CONFORM TO THE REQUIREMENTS OF SPECIFICATION SECTION 05 81 00, ANCHORAGE IN CONCRETE AND MASONRY

3 ADHESIVE DOWELS

NO SCALE

NOTES:
1. EPOXY SHALL BE HILTI HIT-RE 500 V3 (OR EQ). INSTALL PER MFR SPEC'S AND ESR REPORT. SPECIAL INSPECTION REQUIRED. MIN EDGE DISTANCES PER ESR REPORT.
2. ALL-THREAD ANCHORS TO BE SS316.
3. CARE TO BE TAKEN TO NOT HIT REINF.
4. GATE SHOP DRAWINGS AND ANCHORAGE TO BE COORD WITH EOR PRIOR TO INSTALLATION.

ANCHOR DIA.	MIN. EMBED. (IN)
1/2"	4"
5/8"	5"
3/4"	6"
7/8"	7"

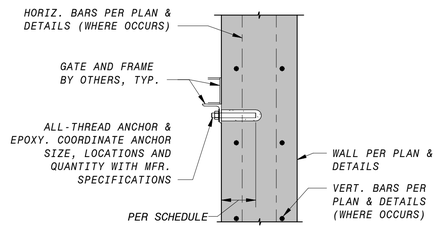

PLAN VIEW
FRAME EMBED. AT WALL (SLAB SIM.)

9 SURFACE MOUNT GATE FRAME DETAIL

NO SCALE

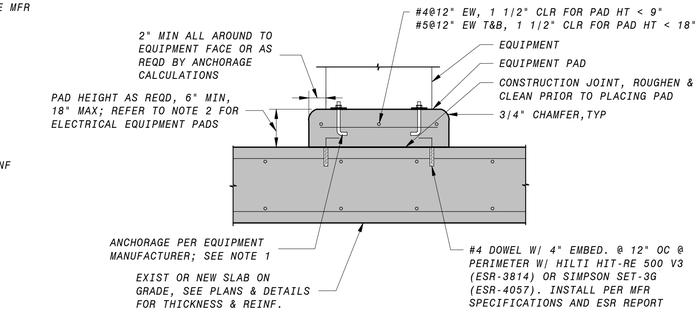

NOTES:
1. EQUIPMENT MANUFACTURER TO PROVIDE ANCHORAGE DESIGN INTO EQUIPMENT PAD AS SHOWN AND IN CONFORMANCE WITH THE PROJECT SPECIFICATIONS. INSTALL PER MANUFACTURER INSTRUCTIONS.
2. CONCRETE PADS FOR ELECTRICAL EQUIPMENT SHALL BE 4" HIGH, UNLESS NOTED OTHERWISE.
3. PAD SIZE SHALL BE MINIMUM INDICATED OR AS SHOWN ON THE PLANS OR AS INDICATED BY THE MANUFACTURER AND APPROVED BY THE DESIGN-BUILDER.
4. THE SIZE, NUMBER, TYPE, LOCATION, AND THREAD PROJECTION OF THE ANCHOR BOLTS SHALL BE DETERMINED BY THE EQUIPMENT MANUFACTURER. ANCHOR BOLTS SHALL BE HELD IN POSITION WITH A TEMPLATE OR OTHER ACCEPTABLE MEANS, MATCHING THE BASE PLATE, WHILE PAD IS BEING PLACED.
5. EQUIPMENT BASES SHALL BE INSTALLED LEVEL UNLESS INDICATED OTHERWISE
6. WEDGES, SHIMS, OR LEVELING NUTS SHALL BE USED TO SUPPORT THE BASE WHILE THE NON-SHRINK GROUT IS PLACED. WEDGES OR SHIMS THAT ARE LEFT IN PLACE SHALL NOT BE EXPOSED TO VIEW.
7. WHERE EQUIPMENT OR PIPING ELEVATION REQUIRE A PAD HEIGHT LESS THAN THE MINIMUM SHOWN, CONSULT WITH DESIGN-BUILDER.
8. 1 1/2" MAX., HIGH-STRENGTH, NON-SHRINK GROUT (WHERE REQUIRED) IS PERMITTED.
9. POST-INSTALLED CONCRETE ANCHORS MAY BE USED IN LIEU OF CAST IN PLACE ANCHOR BOLTS WHEN APPROVED BY THE EQUIPMENT MANUFACTURER AND EOR.

1 TYP INTERIOR CONCRETE EQUIPMENT PAD

NO SCALE

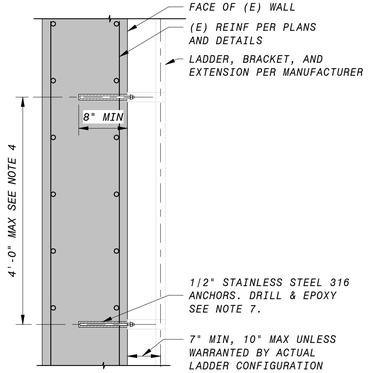

NOTE:
1. SPECIAL INSPECTION REQUIRED IN ACCORDANCE WITH THE CURRENT EDITION OF THE CALIFORNIA BUILDING CODE AND PRODUCT'S ESR REPORT.
2. FOLLOW ADHESIVE MANUFACTURER'S INSTRUCTIONS & ESR REPORT FOR INSTALLATION.
3. USE MINIMUM EMBEDMENTS SHOWN, EXCEPT USE MANUFACTURER'S MINIMUM RECOMMENDED EMBEDMENT IF GREATER.
4. IF LADDER CONFIGURATION REQUIRES A GREATER DISTANCE BETWEEN SUPPORTS THAN INDICATED ON TYPICAL DETAILS, THE LADDER SUPPLIER SHALL DESIGN THE LADDER, LADDER BRACKET, AND LADDER BRACKET CONNECTIONS FOR THE INDICATED SPAN IN ACCORDANCE WITH NOTE 6 BELOW.
5. CARE SHALL BE TAKEN TO AVOID EXISTING REINFORCEMENT.
6. ALL LADDERS SHALL BE DESIGNED AND FABRICATED BY LADDER SUPPLIER IN CONFORMANCE WITH THE LATEST ISSUE OF OASHA/ANSI A14.3, SECTION 1910.27 APPLICABLE BUILDING CODE STANDARDS FOR FIXED WALL LADDERS, AND REQUIREMENTS OF THE CONTRACT DRAWINGS AND SPECIFICATIONS. GENERAL CONFIGURATION AND DETAILS SHALL CONFORM WITH THIS DRAWING. ALL LADDERS TO BE GALVANIZED, UNO.
7. ADHESIVE MAY BE HILTI HIT-RE 500 V3 OR SIMPSON SET-3G.
8. CONFORM TO THE REQUIREMENTS OF SPECIFICATION SECTION 05 81 00, ANCHORAGE IN CONCRETE AND MASONRY.
9. REFER TO SPECIFICATION 06 74 17 FOR LADDER MATERIAL AND ADDITIONAL REQUIREMENTS.

2 LADDER ATTACHMENT

NO SCALE

90% SUBMITTAL - NOT FOR CONSTRUCTION

NO.	BY	CHK	APP	DATE	REVISIONS AND RECORD OF USE

REGISTERED PROFESSIONAL ENGINEER CHARLES R. ASHLEY JR. S 5258 STRUCTURAL STATE OF CALIFORNIA

Ashley & Vance ENGINEERING, INC

JOINT VENTURE

BLACK & VEATCH

FILANC

CITY OF MORRO BAY
FILANC BLACK & VEATCH DB PROPOSAL
WATER RECLAMATION FACILITY (WRF)

GENERAL
STRUCTURAL
STANDARD DETAILS

DESIGNED: M. MARSH
DETAILED: S. BENJAMIN
CHECKED: I. SHOEBRIDGE
APPROVED: C. ASHLEY
DATE: XX/XX/XXXX

0 1/2 1
IF THIS BAR DOES NOT MEASURE 1" THEN DRAWING IS NOT TO FULL SCALE

PROJECT NO. 400530

00-S-105
SHEET OF XXX

PLOTTED: 3/24/2020 10:53:39 AM
D400530

NOTE:
1. LOAD BEARING STUDS MUST BE SEATED TIGHT TO TRACK WEB (MAX. GAP OF 1/16")
2. FOR USE WITH INTERIOR WALLS ONLY.
3. MAXIMUM 5PSF HORIZONTAL LOADING, LIMITED TO WALLS LESS THAN 22' TALL.

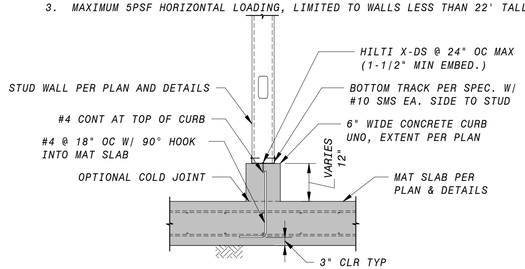

9 BOTTOM OF WALL TO CURB
NO SCALE

NOTE:
1. LOAD BEARING STUDS MUST BE SEATED TIGHT TO TRACK WEB (MAX. GAP OF 1/16")
2. FOR USE WITH INTERIOR WALLS ONLY.
3. MAXIMUM 5PSF HORIZONTAL LOADING, LIMITED TO WALLS LESS THAN 22'-0" TALL

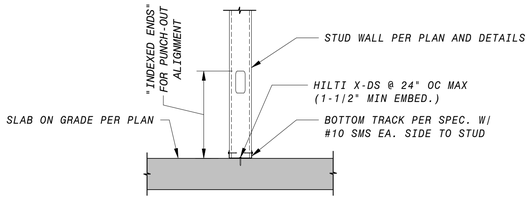

6 BOTTOM OF WALL TO SLAB ON GRADE
NO SCALE

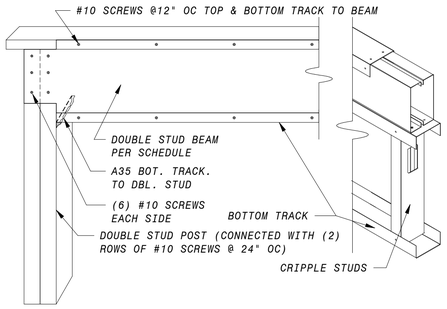

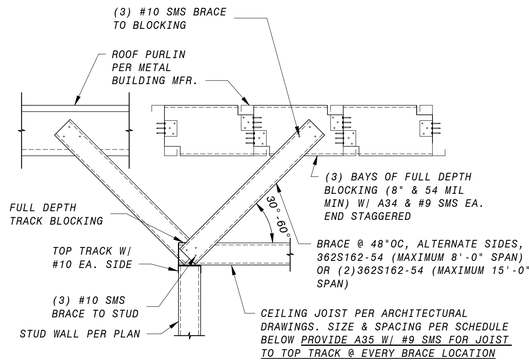

INT. BOXED HEADER SCHEDULE[1,2]		
MAX. SPAN	SIZE	GRADE
6'-0"	(2) 550S162-43	33 KSI
10'-0"	(2) 600S162-43	33 KSI

NOTES:
1. WEB STIFFENERS REQUIRED AT ENDS.
2. TYPICAL HEADER DESIGN BASED ON CEILING LOADING OF 8PSF TOTAL DEAD LOAD, 5PSF LIVE LOAD W/ MAX SPAN OF 24'-0".

3 TYPICAL HEADER
NO SCALE

WALL SCHEDULE AT TYPICAL INTERIOR PARTITIONS				
WALL	MAX HT	SIZE	GRADE	SPACING
TYP INTERIOR WALL	15'-0"	362S137-43	33 KSI	24" OC
PLUMBING WALL	15'-0"	600S162-43	33 KSI	24" OC
INTERIOR WALL W/ CASEWORK, GRAB BAR OR HAND RAILS	15'-0"	362S200-54	50 KSI	12" OC
	15'-0"	600S200-54	50 KSI	16" OC

NOTES:
1. WALL STUDS SHALL BE BRACED ALONG THEIR LENGTH AT 48" OC IF NOT SHEATHED WITH 5/8" GYP BOARD OR 1/2" PLYWOOD EACH SIDE, FULL HEIGHT.
2. WALL DESIGN BASED ON 5PSF LATERAL LOAD AND L/240 DEFLECTION LIMIT.

1 TOP OF WALL BRACING
NO SCALE

SIMPSON STRONG-TIE HUC HANGER TO PEMB COLUMN, WELD PER MFR SPECS W/MAX NUMBER OF WELD SEGMENTS. CONNECT HANGER TO HEADER W/ MAX NUMBER OF #10 SCREWS

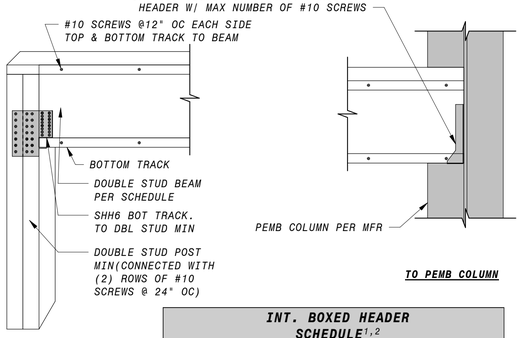

TO PEMB COLUMN

TO POST

INT. BOXED HEADER SCHEDULE[1,2]		
MAX. SPAN	SIZE	GRADE
6'-0"	(2) 550S162-43	33 KSI
19'-6"	(2) 1400S200-68	33 KSI

NOTES:
1. WEB STIFFENERS REQUIRED AT ENDS.
2. HEADER DESIGN BASED ON 16PSF TOTAL DEAD LOAD (4 LAYER GYP. WALL BOARD), 5PSF LIVE LOAD (NON-ACCESSIBLE) AND L/240 DEFLECTION LIMIT.

10 TYPICAL ELECTRICAL ROOM HEADER
NO SCALE

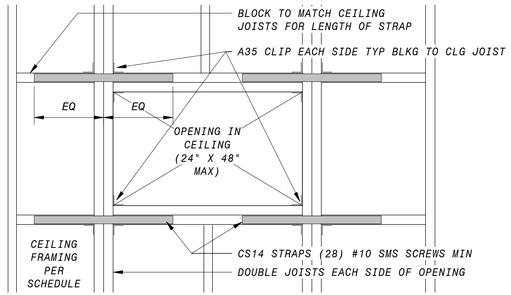

7 TYPICAL BLOCKOUT FRAMING
NO SCALE

SEE DETAIL 2 THIS SHEET FOR TYPICAL CEILING JOIST SCHEDULE.

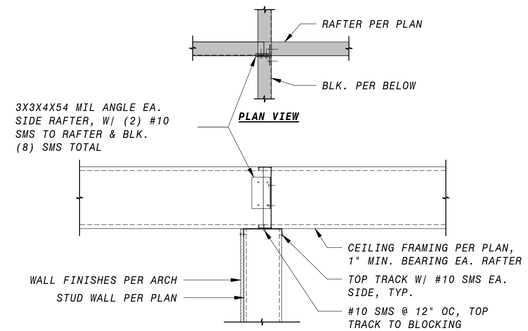

4 CEILING JOISTS TO INTERIOR WALL
NO SCALE

NOTES:
1. MINIMUM THICKNESS OF BASE MATERIAL (STEEL)=1/4" COORDINATE AS REQUIRED.
2. WALL STUDS SHALL BE BRACED ALONG THEIR LENGTH AT 48" OC IF NOT SHEATHED WITH 5/8" GYP BOARD OF 1/2" PLYWOOD EACH SIDE, FULL HEIGHT.
3. WALL DESIGN BASED ON 5PSF LATERAL LOAD AND L/240 DEFLECTION LIMIT.

11 TOP OF WALL TO PEMB FRAME
NO SCALE

SEE DETAIL 1 THIS SHEET FOR TYPICAL INTERIOR PARTITION SCHEDULE.

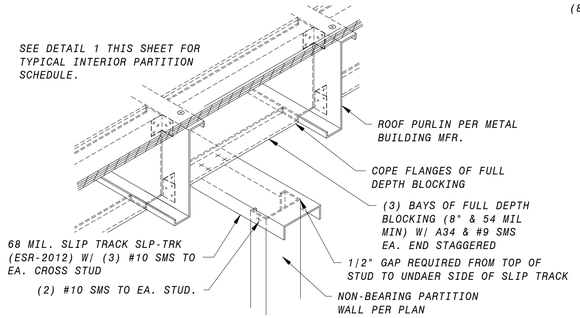

WALL SCHEDULE AT TYPICAL INTERIOR PARTITIONS				
WALL	MAX. HT.	SIZE	GRADE	SPACING
TYP INTERIOR WALL	15'-0"	362S137-43	33 KSI	24" OC
	22'-0"	362S162-54	50 KSI	12" OC
PLUMBING WALL	22'-0"	600S162-43	33 KSI	24" OC
INTERIOR WALL W/ CASEWORK, GRAB BAR OR HAND RAILS	15'-0"	362S200-54	50 KSI	12" OC
	15'-0"	600S200-54	50 KSI	16" OC
	22'-0"	600S2000-54	50 KSI	12" OC

NOTES:
1. WALL STUDS SHALL BE BRACED ALONG THEIR LENGTH AT 48" OC IF NOT SHEATHED WITH 5/8" GYP BOARD OR 1/2" PLYWOOD EACH SIDE, FULL HEIGHT.
2. WALL DESIGN BASED ON 5PSF LATERAL LOAD AND L/240 DEFLECTION LIMIT.

8 TOP OF STEEL STUD WALL SUPPORT
NO SCALE

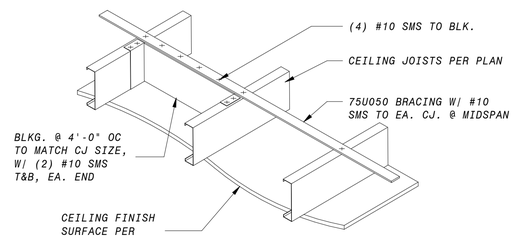

5 TYPICAL CEILING JOIST BRACING
NO SCALE

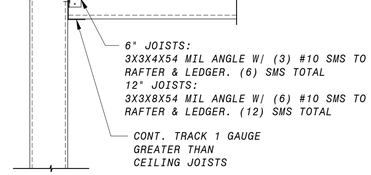

CEILING JOIST SCHEDULE (MAX SPAN, FT-IN)			
SECTION (SSMA)	Fy (KSI)	ALLOWABLE SPAN	SPACING
TYPICAL CEILING LOADING [1,3,4,5,6,7]			
600S162-43	33	15'-0"	24" O.C.
1200S200-54	50	24'-0"	24" O.C.
E-ROOM LOADING [2,3,4,5,6,7]			
1200S200-54	50	20'-0"	24" O.C.

NOTES:
1. TYPICAL JOIST DESIGN BASED ON 8PSF TOTAL DEAD LOAD (2 LAYER GYP WALL BOARD), 5PSF LIVE LOAD (NON-ACCESSIBLE) AND L/240 DEFLECTION LIMIT.
2. TYPICAL JOIST DESIGN BASED ON 16PSF TOTAL DEAD LOAD (4 LAYER GYP. WALL BOARD), 5PSF LIVE LOAD (NON-ACCESSIBLE) AND L/240 DEFLECTION LIMIT.
3. 1" MINIMUM BEARING REQUIRED AT EACH END.
4. WEB PUNCHOUTS MAY NOT OCCUR NEAR SUPPORTS.
5. STORAGE LOADING NOT PERMITTED.
6. WEB STIFFENERS REQUIRED AT ENDS.
7. BRACING REQUIRED AT MIDSPAN FOR SPANS > 14'

2 CEILING JOIST TO STUD WALL
NO SCALE

90% SUBMITTAL - NOT FOR CONSTRUCTION

NO.	BY	CHK	APP	DATE	REVISIONS AND RECORD OF USE

REGISTERED PROFESSIONAL ENGINEER CHARLES R. ASHLEY JR. S 5258 STRUCTURAL STATE OF CALIFORNIA

Ashley & Vance ENGINEERING, INC
JOINT VENTURE
BLACK & VEATCH
FILANC

CITY OF MORRO BAY
FILANC BLACK & VEATCH DB PROPOSAL
WATER RECLAMATION FACILITY (WRF)

GENERAL
STRUCTURAL
STANDARD DETAILS

DESIGNED: M. MARSH
DETAILED: S. BENJAMIN
CHECKED: I. SHOEBRIDGE
APPROVED: C. ASHLEY
DATE: XX/XX/XXXX

0 1/2 1
IF THIS BAR DOES NOT MEASURE 1" THEN DRAWING IS NOT TO FULL SCALE

PROJECT NO. 400530

00-S-106
SHEET OF XXX

PLOTTED: 3/24/2020 10:53:40 AM
D400530

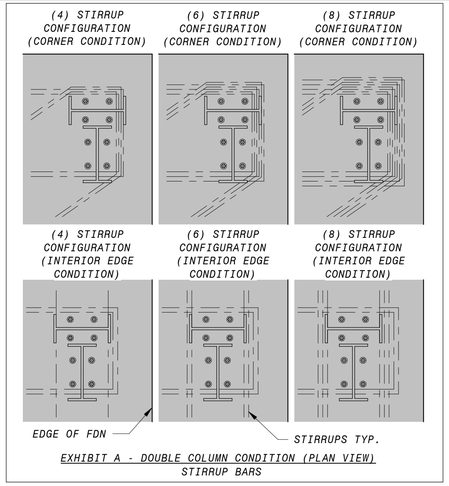

EXHIBIT A - DOUBLE COLUMN CONDITION (PLAN VIEW)
STIRRUP BARS

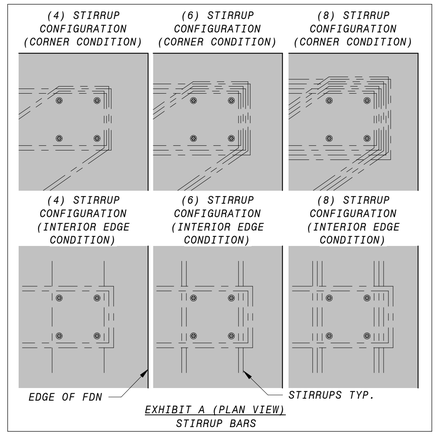

EXHIBIT A (PLAN VIEW)
STIRRUP BARS

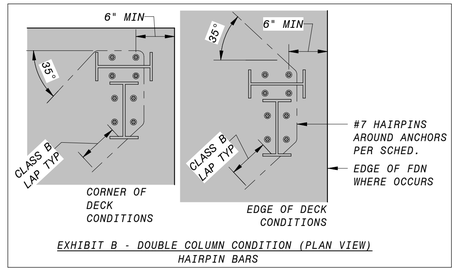

EXHIBIT B - DOUBLE COLUMN CONDITION (PLAN VIEW)
HAIRPIN BARS

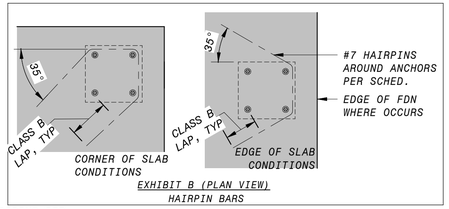

EXHIBIT B (PLAN VIEW)
HAIRPIN BARS

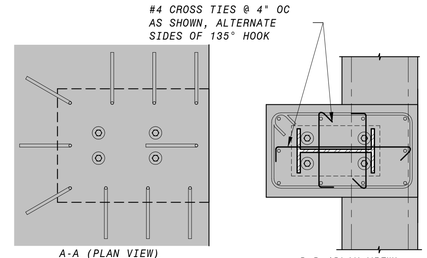

A-A (PLAN VIEW)
HOOK ORIENTATION

B-B (PLAN VIEW)
TIE & CROSSTIE ORIENTATION

CL COLUMN = CL PILASTER

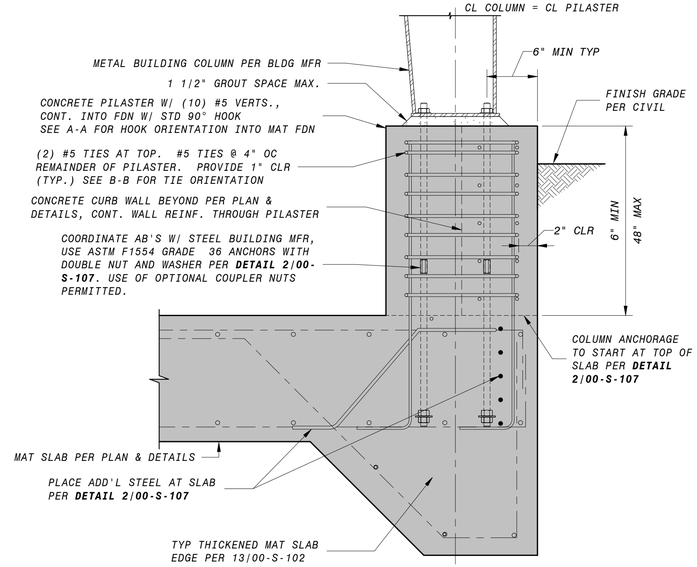

SECTION VIEW

1 STEEL FRAME AT CONCRETE PILASTER
NO SCALE

COORDINATE ANCHORS WITH METAL BUILDING MFR, USE ASTM F1554 GRADE 36 ANCHORS WITH DOUBLE NUT AND WASHER PER SCHEDULE

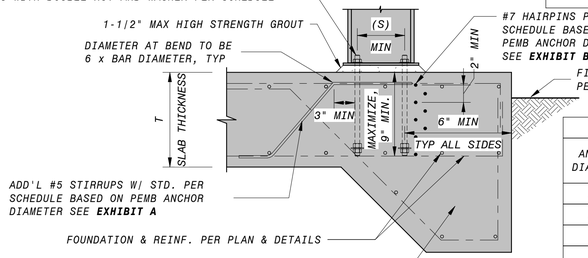

ADD'L REINFORCEMENT SCHEDULE

ANCHOR DIAMETER	NO. OF STIRRUPS (#5)	NO. OF HAIRPINS (#7)	SPACING (S) MINIMUM	WASHER SIZE
5/8"	4	3	3"	1/2X1-3/4X1-3/4"
3/4"	4	4	4"	1/2X2-1/4X2-1/4"
7/8"	6	5	4"	1/2X2-1/2X2-1/2"
1"	8	7	6"	5/8X3X2-3/4"

2 ADD'L REINFORCEMENT AT PEMB ANCHORAGE
95-S-101 NO SCALE

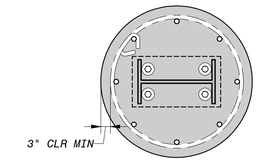

PILASTER PLAN VIEW

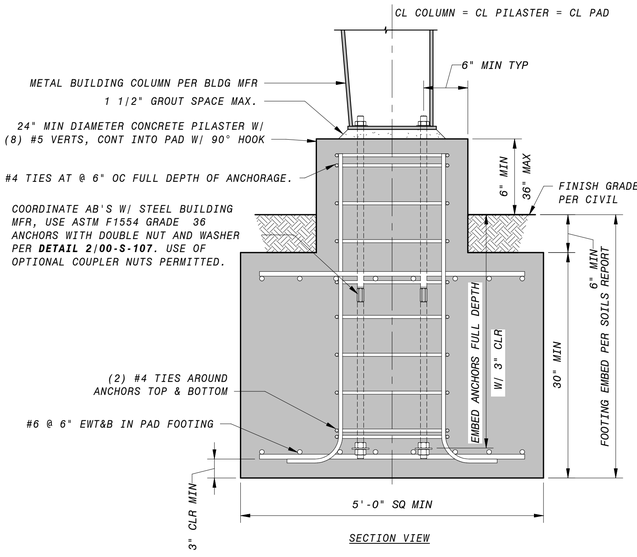

SECTION VIEW

5 STEEL FRAME AT CONCRETE PIER
NO SCALE

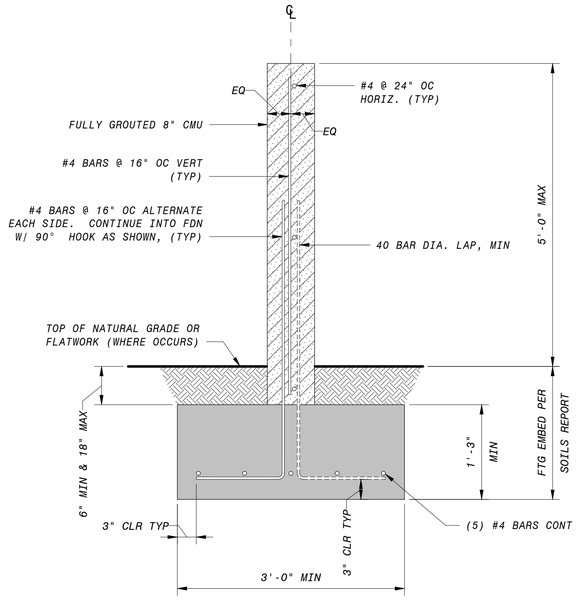

4 CMU TRASH ENCLOSURE WALL
NO SCALE

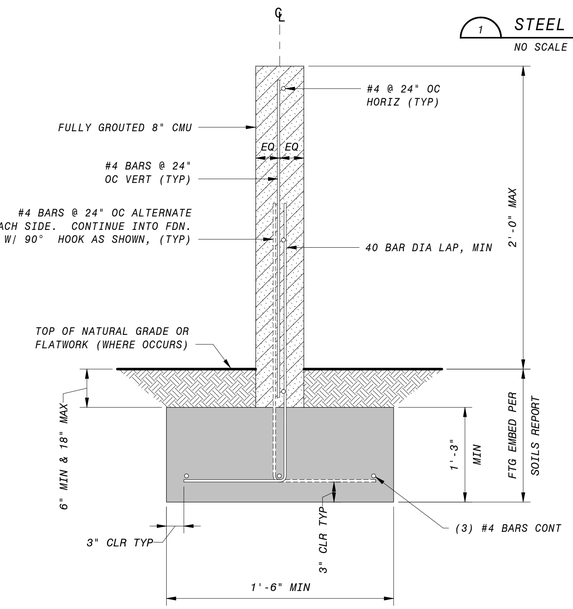

6 CMU WASHDOWN WALL
NO SCALE

90% SUBMITTAL - NOT FOR CONSTRUCTION

NO.	BY	CHK	APP	DATE	REVISIONS AND RECORD OF USE

REGISTERED PROFESSIONAL ENGINEER CHARLES R. ASHLEY JR. S 5258 STRUCTURAL STATE OF CALIFORNIA

Ashley & Vance ENGINEERING, INC
JOINT VENTURE
BLACK & VEATCH
FILANC

CITY OF MORRO BAY
FILANC BLACK & VEATCH DB PROPOSAL
WATER RECLAMATION FACILITY (WRF)

GENERAL
STRUCTURAL
STANDARD DETAILS

DESIGNED: M. MARSH
DETAILED: S. BENJAMIN
CHECKED: I. SHOEBRIDGE
APPROVED: C. ASHLEY
DATE: XX/XX/XXXX

0 1/2 1
IF THIS BAR DOES NOT MEASURE 1" THEN DRAWING IS NOT TO FULL SCALE

PROJECT NO. 400530

00-S-107
SHEET
OF XXX

PLOTTED: 3/24/2020 3:05:32 PM
D400530

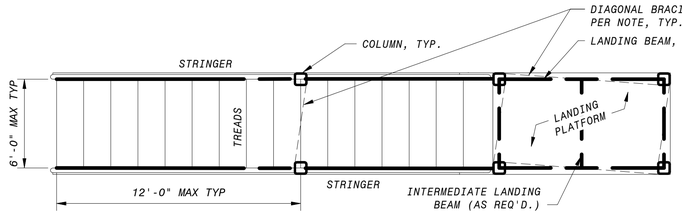

TYP. STAIR LAYOUT REFERENCE

TYP. STEEL STAIR CONSTRUCTION

TYPICAL FRAMING	
TREADS:	2" MIN GRATTING. SEE NOTE BELOW
STRINGERS:	MC12X14.3 MAX SPAN 12'-0"
LANDING BEAMS:	MC12X14.3 MAX SPAN 12'-0"
LANDING PLATFORM:	2" MIN GRATING. SEE NOTE BELOW
COLUMNS:	HSS4X4X1/4" MAX HEIGHT 12'-0"

DIAGONAL BRACING

AT LANDINGS AND SUPPORTS OVER 6'-0" TALL. PROVIDE L4X4X1/4" DIAGONAL BRACING EACH SIDE W/ 3/16" FILLET WELD ALL AROUND @ EACH END TO COLUMN.

GRATING

FURNISH GALVANIZED STEEL GRATING FOR LANDINGS AND TREADS DESIGNED FOR OUTDOOR INSTALATION IN A COSTAL ENVIRONMENT. GRATING SHALL BE DESIGNED FOR 100PSF UNIFORM DISTRIBUTED LIVE LOAD, 300 LB CONCENTRATED LIVE LOAD, AND LESSER OF L/200 OR 1/4" DEFLECTION AND MAXIMUM SPAN OF 6'-0".

TYPICAL DETAILS

1/00-S-104	STAIR TREAD TO STRINGER
3/00-S-104	STRINGER TO CONCRETE
4/00-S-104	CONCRETE STAIR LANDING
7/00-S-104	TYPICAL STRINGER BEND
8/00-S-104	STRINGER OR LANDING BEAM TO CONCRETE WALL
9/00-S-104	CHANNEL TO COLUMN
10/00-S-104	COLUMN TO MAT SLAB
11/00-S-104	FRAMING TO CONCRETE WALL AT LANDING
2/00-S-108	GUARDRAIL POST TO PLATFORM BEAM
3/00-S-108	STRINGER TO STEEL BEAM
4/00-S-108	CHANNEL TO CHANNEL
5/00-S-108	STRINGER TO INTERMEDIATE COLUMN

NOTES:
1. INFORMATION SHOWN IS FOR REFERENCE ONLY. STAIR DESIGN SHALL BE PER THE STAIR SUPPLIER AND SPECIFICATION 05 50 13.

6 TYPICAL STAIR FRAMING
NO SCALE

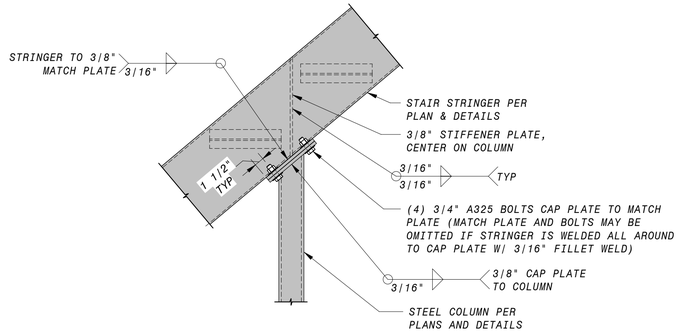

NOTES:
1. CORROSION PROTECTION REQUIRED AT DISSIMILAR METALS.
2. ALL STEEL ELEMENTS TO BE GALVANIZED.
3. REFER TO SPECIFICATIONS FOR FINISH REQUIREMENTS. ALL EXPOSED WELDS TO BE GROUND SMOOTH.
4. REPAIR ALL DAMAGED COATINGS.
5. INFORMATION SHOWN IS FOR REFERENCE ONLY. STAIR DESIGN SHALL BE PER THE STAIR SUPPLIER AND SPECIFICATION 05 50 13.

5 STRINGER TO COLUMN
NO SCALE

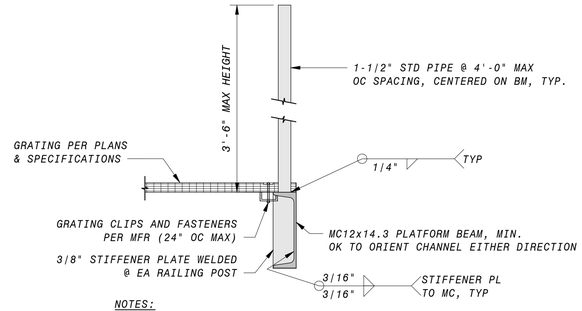

NOTES:
1. CORROSION PROTECTION REQUIRED AT DISSIMILAR METALS.
2. ALL STEEL ELEMENTS TO BE GALVANIZED, UNO.
3. REFER TO SPECIFICATIONS FOR FINISH REQUIREMENTS. ALL EXPOSED WELDS TO BE GROUND SMOOTH.
4. REPAIR ALL DAMAGED COATINGS.

2 GUARDRAIL POST TO PLATFORM BEAM
NO SCALE

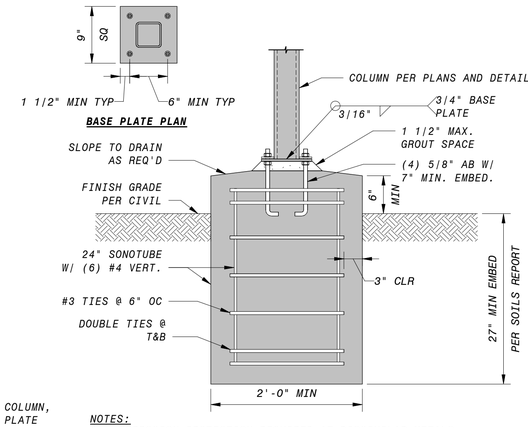

NOTES:
1. CORROSION PROTECTION REQUIRED AT DISSIMILAR METALS.
2. ALL STEEL ELEMENTS TO BE GALVANIZED, UNO.
3. REFER TO SPECIFICATIONS FOR FINISH REQUIREMENTS. ALL EXPOSED WELDS TO BE GROUND SMOOTH.
4. REPAIR ALL DAMAGED COATINGS.
5. SUBGRADE PER PROJECT SPECIFICATIONS AND GEOTECHNICAL REPORT.

7 STEEL COLUMN TO PIER FND
NO SCALE

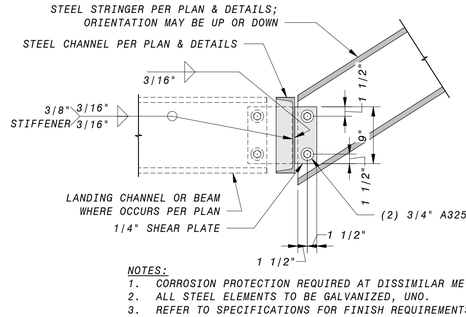

NOTES:
1. CORROSION PROTECTION REQUIRED AT DISSIMILAR METALS.
2. ALL STEEL ELEMENTS TO BE GALVANIZED, UNO.
3. REFER TO SPECIFICATIONS FOR FINISH REQUIREMENTS. ALL EXPOSED WELDS TO BE GROUND SMOOTH.
4. REPAIR ALL DAMAGED COATINGS.

3 STEEL STRINGER TO BEAM
NO SCALE

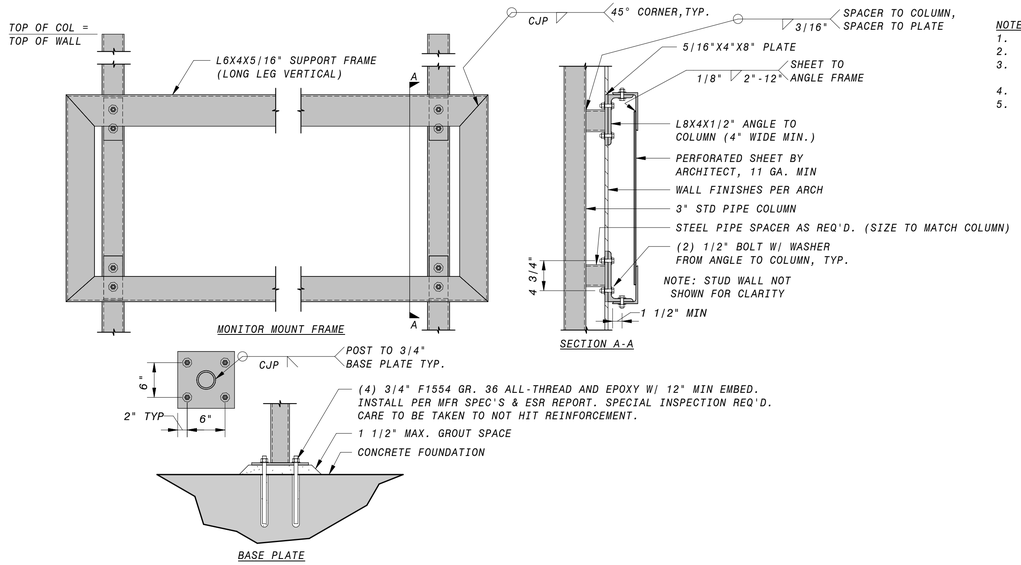

10 CONTROL ROOM MONITOR SUPPORT
NO SCALE

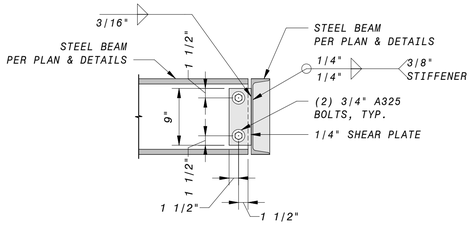

NOTES:
1. CORROSION PROTECTION REQUIRED AT DISSIMILAR METALS.
2. ALL STEEL ELEMENTS TO BE GALVANIZED, UNO.
3. REFER TO SPECIFICATIONS FOR FINISH REQUIREMENTS. ALL EXPOSED WELDS TO BE GROUND SMOOTH.
4. REPAIR ALL DAMAGED COATINGS.

4 STEEL CHANNEL TO CHANNEL
NO SCALE

90% SUBMITTAL - NOT FOR CONSTRUCTION

NO.	BY	CHK	APP	DATE	REVISIONS AND RECORD OF USE

REGISTERED PROFESSIONAL ENGINEER CHARLES R. ASHLEY JR. S 5258 STRUCTURAL STATE OF CALIFORNIA

Ashley & Vance ENGINEERING, INC | JOINT VENTURE | BLACK & VEATCH | FILANC

CITY OF MORRO BAY
FILANC BLACK & VEATCH DB PROPOSAL
WATER RECLAMATION FACILITY (WRF)

GENERAL
STRUCTURAL
STANDARD DETAILS

DESIGNED:	M. MARSH
DETAILED:	S. BENJAMIN
CHECKED:	I. SHOEBRIDGE
APPROVED:	C. ASHLEY
DATE:	XX/XX/XXXX

0 1/2 1
IF THIS BAR DOES NOT MEASURE 1" THEN DRAWING IS NOT TO FULL SCALE

PROJECT NO. 400530

00-S-108
SHEET OF XXX

PLOTTED: 3/24/2020 10:53:43 AM
D400530

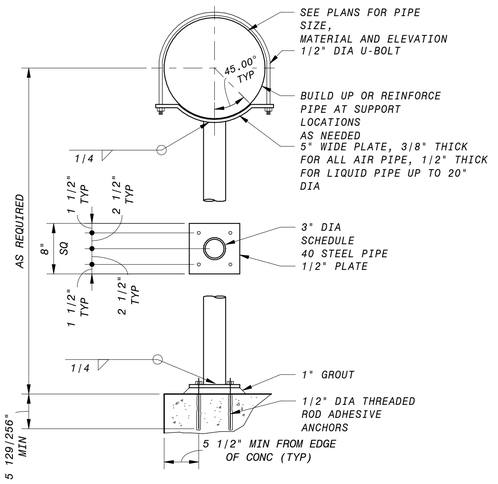

NOTE: ALL STEEL MATERIALS SHALL BE HOT-DIP GALVANIZED FOR EXTERIOR LOCATIONS. VENT HOLES FOR GALVANIZING SHALL BE THE MINIMUM SIZE NECESSARY. HOLES SHALL BE LOCATED IN THE BOTTOM BASEPLATE AND ALSO LOCATED IN THE TOP OF THE PIPE, ADJACENT TO THE CURVED PLATE.

A 3 INCH DIAMETER STEEL COLUMN PIPE SUPPORT

1" = 1'-0"

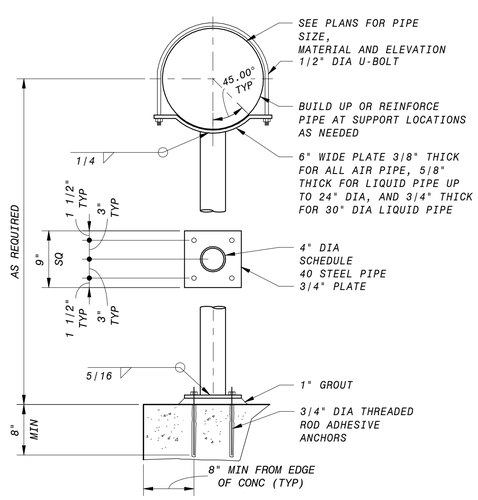

NOTE: ALL STEEL MATERIALS SHALL BE HOT-DIP GALVANIZED FOR EXTERIOR LOCATIONS. VENT HOLES FOR GALVANIZING SHALL BE THE MINIMUM SIZE NECESSARY. HOLES SHALL BE LOCATED IN THE BOTTOM BASEPLATE AND ALSO LOCATED IN THE TOP OF THE PIPE, ADJACENT TO THE CURVED PLATE.

B 4 INCH DIAMETER STEEL COLUMN PIPE SUPPORT

1" = 1'-0"

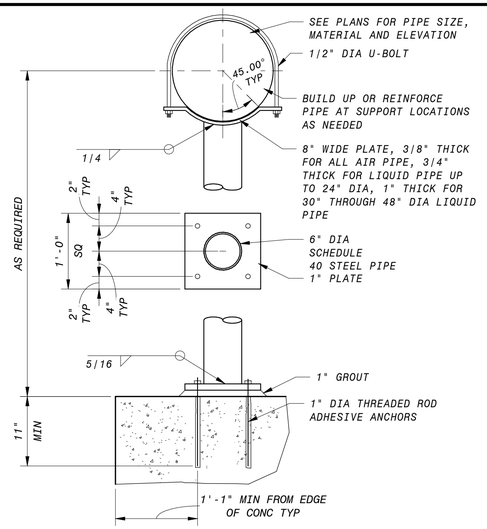

NOTE: ALL STEEL MATERIALS SHALL BE HOT-DIP GALVANIZED FOR EXTERIOR LOCATIONS. VENT HOLES FOR GALVANIZING SHALL BE THE MINIMUM SIZE NECESSARY. HOLES SHALL BE LOCATED IN THE BOTTOM BASEPLATE AND ALSO LOCATED IN THE TOP OF THE PIPE, ADJACENT TO THE CURVED PLATE.

C 6 INCH DIAMETER STEEL COLUMN PIPE SUPPORT

1" = 1'-0"

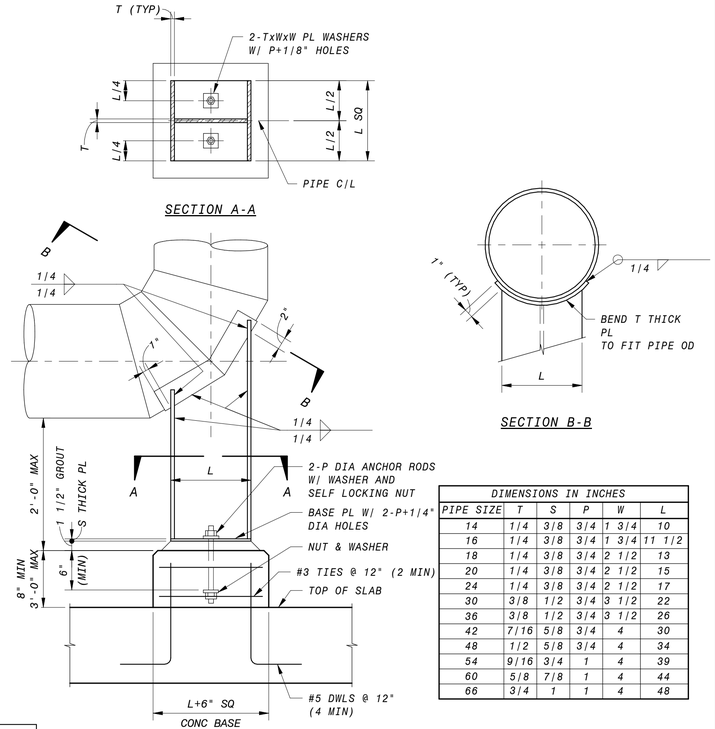

DIMENSIONS IN INCHES						
PIPE SIZE	T	S	P	W	L	
14	1/4	3/8	3/4	1 3/4	10	
16	1/4	3/8	3/4	1 3/4	11 1/2	
18	1/4	3/8	3/4	2 1/2	13	
20	1/4	3/8	3/4	2 1/2	15	
24	1/4	3/8	3/4	2 1/2	17	
30	3/8	1/2	3/4	3 1/2	22	
36	3/8	1/2	3/4	3 1/2	26	
42	7/16	5/8	3/4	4	30	
48	1/2	5/8	3/4	4	34	
54	9/16	3/4	1	4	39	
60	5/8	7/8	1	4	44	
66	3/4	1	1	4	48	

D 90° STEEL PIPE BASE ELBOW SUPPORT

NO SCALE

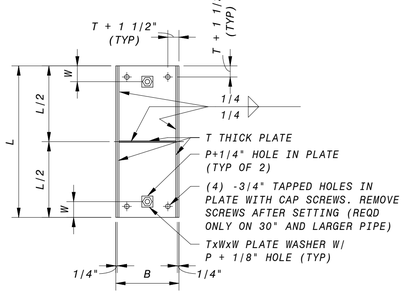

SECTION A-A

DIMENSIONS IN INCHES						
PIPE SIZE	T	S	B	P	W	L
14"	1/4	3/8	8	3/4	2 1/2	10
16"	1/4	3/8	8	3/4	2 1/2	11 1/2
18"	1/4	3/8	10	3/4	2 1/2	13
20"	1/4	3/8	10	3/4	2 1/2	15
24"	1/4	3/8	10	3/4	2 1/2	17
30"	3/8	1/2	12	3/4	3 1/2	22
36"	3/8	1/2	12	3/4	3 1/2	26
42"	7/16	5/8	12	3/4	4	30
48"	1/2	5/8	12	3/4	4	34
54"	9/16	3/4	14	1	4	39
60"	5/8	7/8	15	1	4	44
66"	3/4	1	18	1	4	48

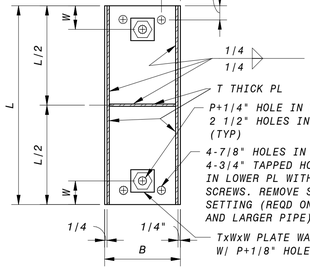

SECTION A-A

DIMENSIONS IN INCHES						
PIPE SIZE	T	S	B	P	W	L
14"	1/4	3/8	8	3/4	2 1/2	10
16"	1/4	3/8	8	3/4	2 1/2	11 1/2
18"	1/4	3/8	10	3/4	2 1/2	13
20"	1/4	3/8	10	3/4	2 1/2	15
24"	1/4	3/8	10	3/4	2 1/2	17
30"	3/8	1/2	12	3/4	3 1/2	22
36"	3/8	1/2	12	3/4	3 1/2	26
42"	7/16	5/8	12	3/4	4	30
48"	1/2	5/8	12	3/4	4	34
54"	9/16	3/4	14	1	4	39
60"	5/8	7/8	15	1	4	44
66"	3/4	1	18	1	4	48

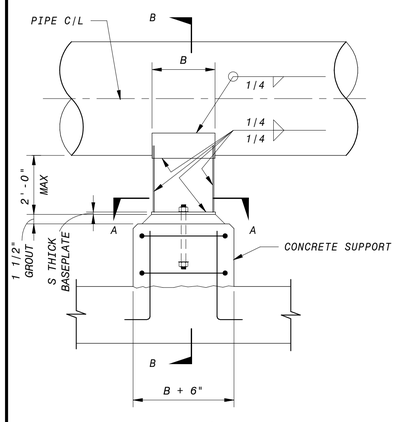

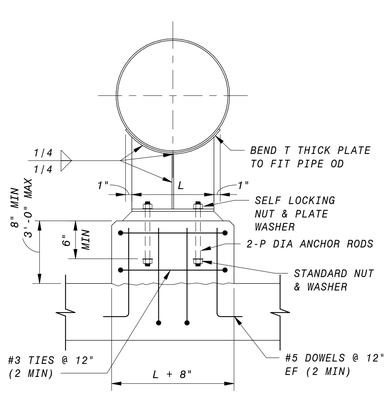

E STEEL SADDLE PIPE SUPPORT (FIXED)

NO SCALE

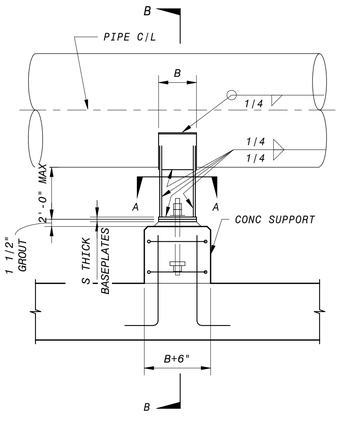

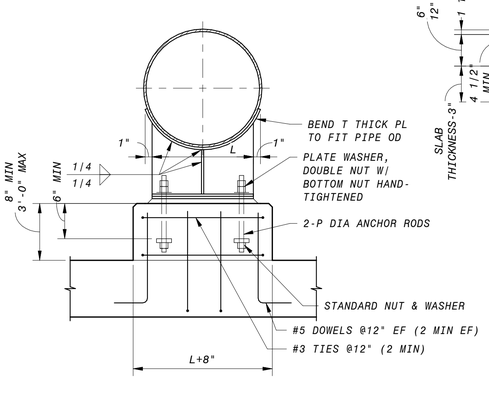

F STEEL SADDLE PIPE SUPPORT (SLIDING)

NO SCALE

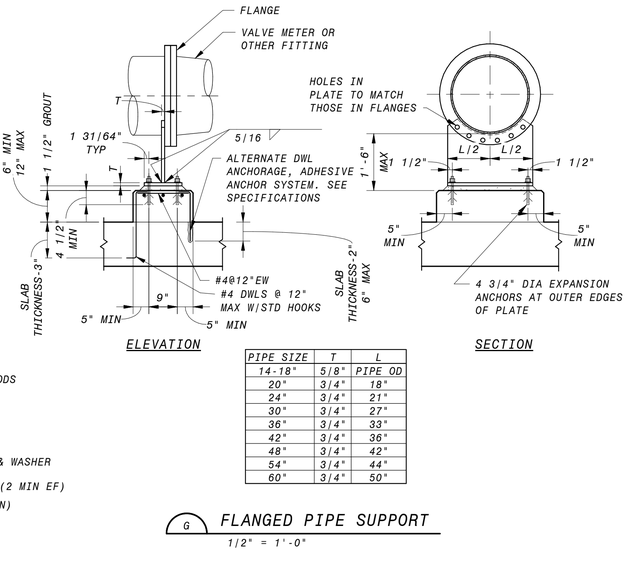

PIPE SIZE	T	L
14-18"	5/8"	PIPE OD
20"	3/4"	18"
24"	3/4"	21"
30"	3/4"	27"
36"	3/4"	33"
42"	3/4"	36"
48"	3/4"	42"
54"	3/4"	44"
60"	3/4"	50"

G FLANGED PIPE SUPPORT

1/2" = 1'-0"

90% SUBMITTAL - NOT FOR CONSTRUCTION

NO.	BY	CHK	APP	DATE	REVISIONS AND RECORD OF USE

REGISTERED PROFESSIONAL ENGINEER CHARLES R. ASHLEY JR. S 5258 STRUCTURAL STATE OF CALIFORNIA

Ashley&Vance ENGINEERING, INC

BLACK&VEATCH

JOINT VENTURE

FILANC

CITY OF MORRO BAY
FILANC BLACK & VEATCH DB PROPOSAL
WATER RECLAMATION FACILITY (WRF)

GENERAL
STRUCTURAL
STANDARD DETAILS

DESIGNED: M. MARSH
DETAILED: S. BENJAMIN
CHECKED: I. SHOEBRIDGE
APPROVED: C. ASHLEY
DATE: XX/XX/XXXX

0 1/2 1

IF THIS BAR DOES NOT MEASURE 1" THEN DRAWING IS NOT TO FULL SCALE

PROJECT NO. 400530

00-S-201
SHEET OF XXX

PLOTTED: 3/24/2020 10:53:46 AM
D400530

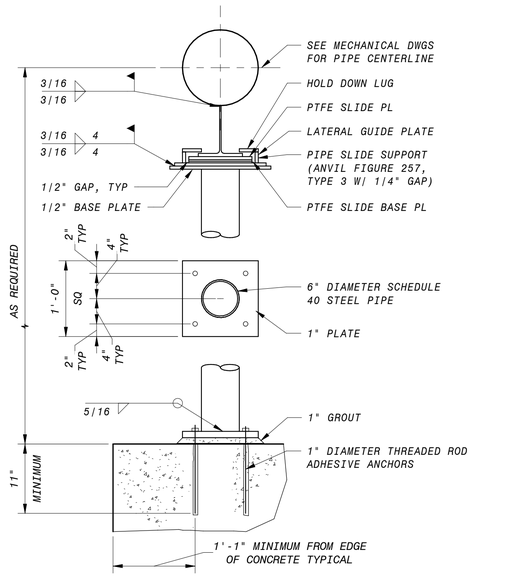

NOTES:

1. ALL STEEL MATERIALS SHALL BE HOT-DIP GALVANIZED FOR EXTERIOR LOCATIONS. VENT HOLES FOR GALVANIZING SHALL BE THE MINIMUM SIZE NECESSARY. HOLES SHALL BE LOCATED IN THE BOTTOM BASEPLATE AND ALSO LOCATED IN THE TOP OF THE PIPE, ADJACENT TO THE CURVED PLATE. FOR LIQUID SIZES UP TO 30".
2. ALL SUPPORT MATERIALS SHALL BE STAINLESS STEEL FOR AERATION SYSTEM AND ACTIVATED SLUDGE BASINS.

A 6 INCH DIAMETER STEEL COLUMN PIPE SUPPORT

NO SCALE

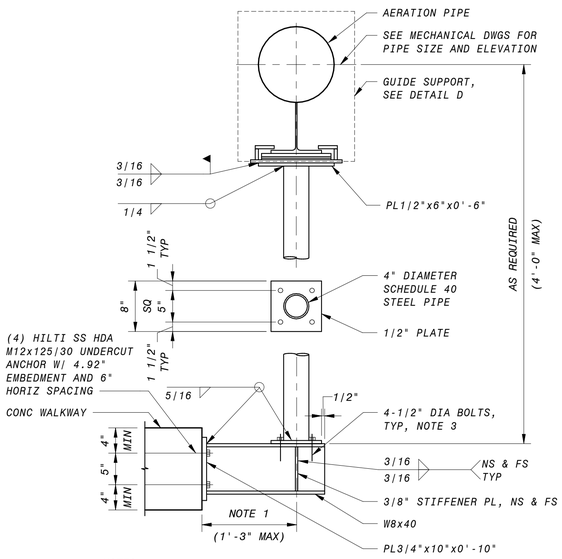

NOTES:

1. SEE MECHANICAL PLAN DWGS FOR DIMENSION.
2. ALL SUPPORT MATERIALS SHALL BE STAINLESS STEEL FOR AERATION SYSTEM.
3. AT SIW, PROVIDE 1" THICK NON-SHRINK GROUT BELOW BASE PLATE WITH 4-1/2" DIA EXPANSION ANCHORS SS 304.
4. CONTRACTOR SHALL LOCATE REINF PRIOR TO DRILLING.

C 4 INCH DIAMETER STEEL COLUMN PIPE SUPPORT

NO SCALE

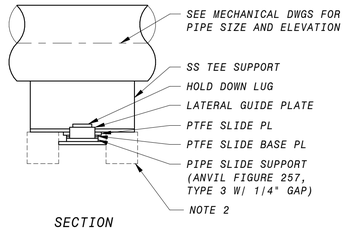

SECTION

NOTES:

1. AERATION PIPE SUPPORTS SHALL BE STAINLESS STEEL EXCEPT WHERE NOTED.
2. WHERE AXIAL STOP IS REQUIRED, REDUCE LENGTH OF TOP PTFE SLIDE PL TO 4" AND CENTER ON SUPPORT TEE ABOVE TO ALLOW AXIAL STOP TO BE WELDED TO BOTTOM OF SUPPORT TEE.

F GUIDE SUPPORT

NO SCALE

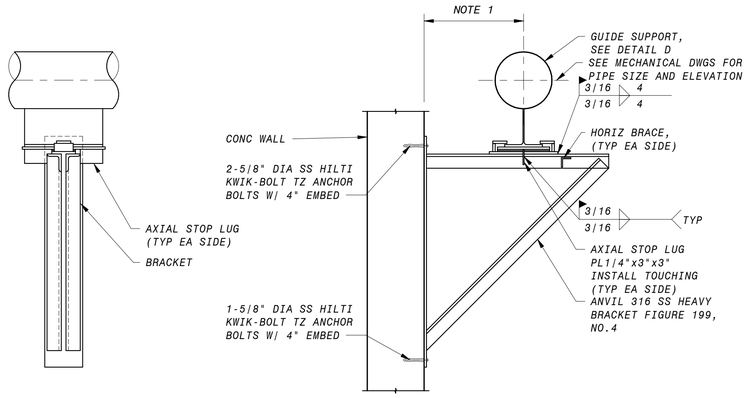

ELEVATION SECTION

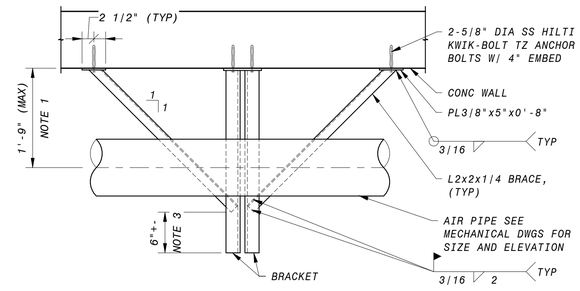

PLAN

NOTES:

1. SEE MECHANICAL PLAN DWGS FOR DIMENSION.
2. ALL SUPPORT MATERIALS SHALL BE STAINLESS STEEL FOR AERATION SYSTEM.
3. FIELD LOCATE HORIZONTAL BRACES TO AVOID CONFLICT WITH VERTICAL BRACES AND AXIAL STOP LUG.
4. CONTRACTOR SHALL LOCATE REINF PRIOR TO DRILLING.

D 4 INCH DIAMETER STEEL COLUMN PIPE SUPPORT

NO SCALE

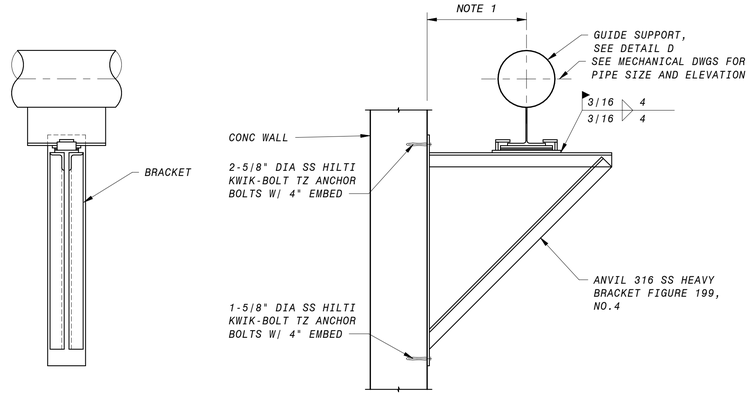

ELEVATION SECTION

NOTES:

1. SEE MECHANICAL PLAN DWGS FOR DIMENSION.
2. BRACKET SUPPORTS SHALL BE 316 STAINLESS STEEL FOR AERATION SYSTEM.
3. CONTRACTOR SHALL LOCATE REINF PRIOR TO DRILLING.

B 4 INCH DIAMETER STEEL COLUMN PIPE SUPPORT

NO SCALE

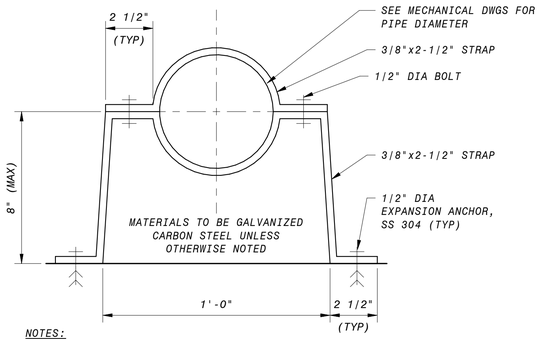

NOTES:

1. FOR AERATION AND ODOR CONTROL PIPE SUPPORTS, MATERIAL SHALL BE STAINLESS STEEL.
2. SEE SADDLE HANGER PIPE SUPPORT FOR DIMENSIONS.
3. SEE ANCHORAGE IN CONCRETE AND MASONRY SECTION FOR ANCHOR PRODUCTS.

E 4 INCH DIAMETER STEEL COLUMN PIPE SUPPORT

NO SCALE

90% SUBMITTAL - NOT FOR CONSTRUCTION

NO.	BY	CHK	APP	DATE	REVISIONS AND RECORD OF USE

REGISTERED PROFESSIONAL ENGINEER CHARLES R. ASHLEY JR. S 5258 STRUCTURAL STATE OF CALIFORNIA

Ashley&Vance ENGINEERING, INC

JOINT VENTURE

BLACK&VEATCH

FILANC

CITY OF MORRO BAY
FILANC BLACK & VEATCH DB PROPOSAL
WATER RECLAMATION FACILITY (WRF)

GENERAL
STRUCTURAL
STANDARD DETAILS

DESIGNED:	M. MARSH
DETAILED:	S. BENJAMIN
CHECKED:	I. SHOEBRIDGE
APPROVED:	C. ASHLEY
DATE:	XX/XX/XXXX

0 1/2 1

IF THIS BAR DOES NOT MEASURE 1" THEN DRAWING IS NOT TO FULL SCALE

PROJECT NO. 400530

00-S-202

SHEET OF XXX

PLOTTED: 3/24/2020 10:53:47 AM

D400530

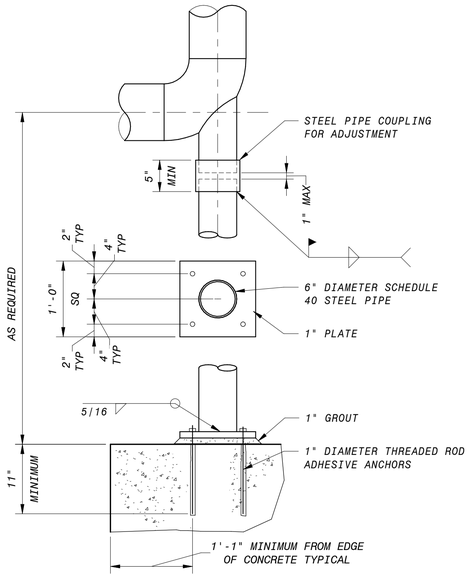

A ELBOW SUPPORT
NO SCALE

90% SUBMITTAL - NOT FOR CONSTRUCTION

NO.	BY	CHK	APP	DATE	REVISIONS AND RECORD OF USE

REGISTERED PROFESSIONAL ENGINEER
CHARLES R. ASHLEY JR.
S 5258
STRUCTURAL
STATE OF CALIFORNIA

Ashley & Vance ENGINEERING, INC
JOINT VENTURE
BLACK & VEATCH
FILANC

CITY OF MORRO BAY
FILANC BLACK & VEATCH DB PROPOSAL
WATER RECLAMATION FACILITY (WRF)

GENERAL
STRUCTURAL
STANDARD DETAILS

DESIGNED: M. MARSH
DETAILED: S. BENJAMIN
CHECKED: I. SHOEBRIDGE
APPROVED: C. ASHLEY
DATE: XX|XX|XXXX

0 1/2 1
IF THIS BAR DOES NOT MEASURE 1" THEN DRAWING IS NOT TO FULL SCALE

PROJECT NO.
400530

00-S-203
SHEET
OF XXX

PLOTTED: 3|24|2020 10:53:47 AM
D400530

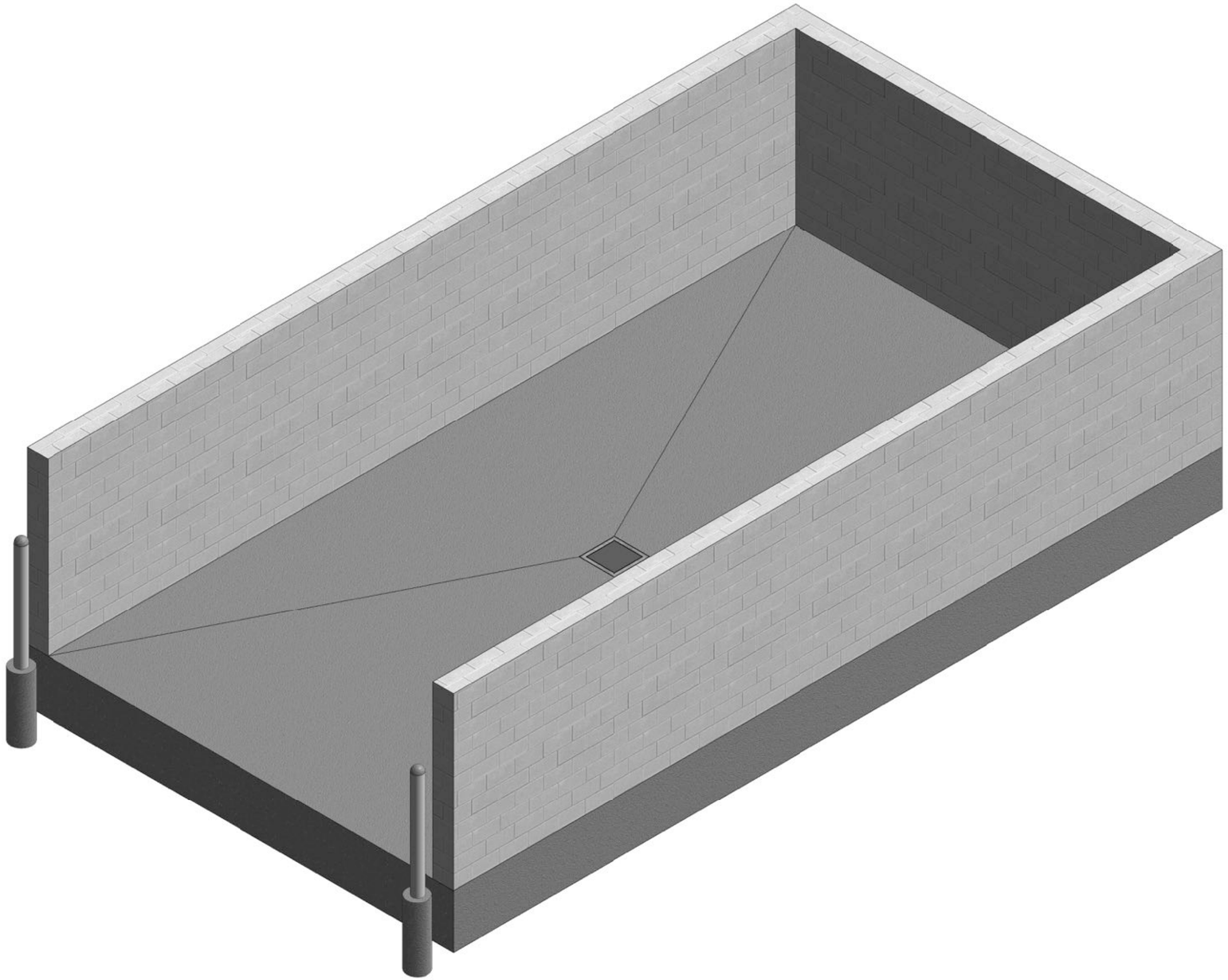

3D VIEW

90% SUBMITTAL - NOT FOR CONSTRUCTION

DATE	REVISIONS AND RECORD OF USE	NO.	BY	CHK	APP'D

REGISTERED PROFESSIONAL ENGINEER
CHARLES R. ASHLEY JR.
S 5258
STRUCTURAL
STATE OF CALIFORNIA

Ashley & Vance ENGINEERING, INC

JOINT VENTURE

BLACK & VEATCH

FILANC

CITY OF MORRO BAY
FILANC BLACK & VEATCH DB PROPOSAL
RECLAMATION FACILITY (WRF)

WASH RACK
STRUCTURAL
3D VIEW

DESIGNED: M. MARSH
DETAILED: S. BENJAMIN
CHECKED: I. SHOEBRIDGE
APPROVED: C. ASHLEY
DATE:

0 1/2 1
IF THIS BAR DOES NOT MEASURE 1" THEN DRAWING IS NOT TO FULL SCALE

PROJECT NO.
400530

13-S-001
SHEET
OF

PLOTTED: 3/24/2020 11:32:30 AM
D400530

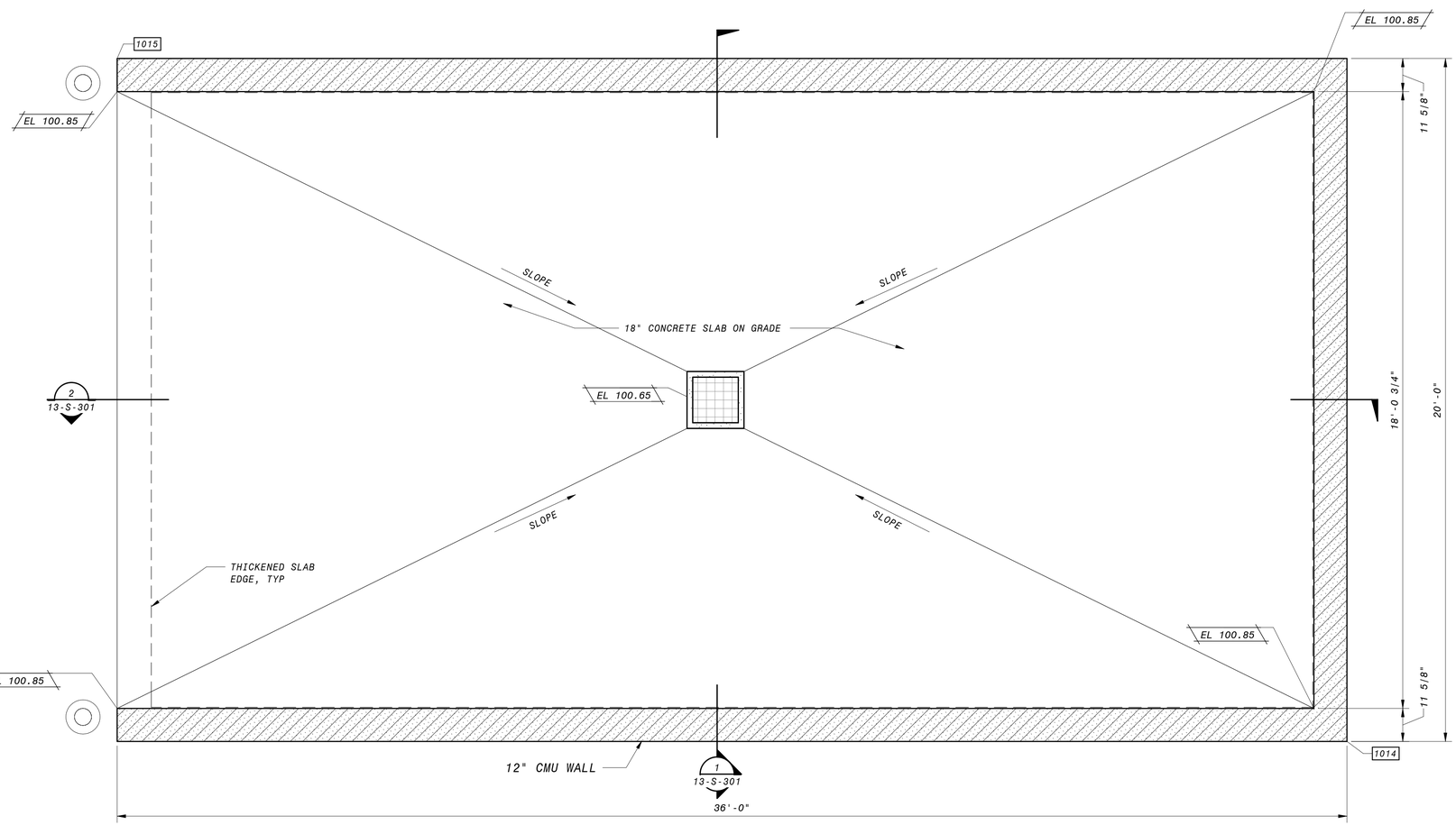

OPERATING FLOOR PLAN

1/2" = 1'-0"

GENERAL FOUNDATION NOTES

1. PLEASE SEE SOILS REPORT FOR ADDITIONAL SPECIFICATIONS AND RECOMMENDATIONS. IT IS THE DESIGN BUILDER'S RESPONSIBILITY TO OBTAIN A COPY OF THE SOILS REPORT FROM THE OWNER OR OWNERS REPRESENTATIVE.
2. NOT USED.
3. FOR GENERAL STRUCTURAL NOTES, SEE SHEETS 00-S-002 AND STAND SPECIFICATIONS.
4. VERIFY ALL DIMENSIONS PRIOR TO COMMENCEMENT OF CONSTRUCTION.
5. ALL LAP SPLICES TO BE CLASS B PER DETAIL 1/00-S-101
6. ALL SLAB REINFORCEMENT MUST TERMINATE WITH A STANDARD 90° HOOK PER DETAIL 5/00-S-101.
7. FOR TYPICAL MAT SLAB EDGE, REFER TO DETAIL 13/00-S-102

12' 6' 0' 1' 2' 3' 4' 5'

1/2" = 1'-0"

90% SUBMITTAL - NOT FOR CONSTRUCTION

NO.	BY	CHK	APP	DATE	REVISIONS AND RECORD OF USE

REGISTERED PROFESSIONAL ENGINEER
CHARLES R. ASHLEY JR.
S 5258
STRUCTURAL
STATE OF CALIFORNIA

Ashley & Vance ENGINEERING, INC

JOINT VENTURE

BLACK & VEATCH

FILANC

CITY OF MORRO BAY
FILANC BLACK & VEATCH DB PROPOSAL
RECLAMATION FACILITY (WRF)

WASH RACK
STRUCTURAL
OPERATING LEVEL PLAN

DESIGNED: M. MARSH
DETAILED: S. BENJAMIN
CHECKED: I. SHOEBRIDGE
APPROVED: C. ASHLEY
DATE:

0 1/2 1

IF THIS BAR DOES NOT MEASURE 1" THEN DRAWING IS NOT TO FULL SCALE

PROJECT NO.
400530

13-S-101
SHEET
OF

PLOTTED: 3/24/2020 11:32:31 AM
D400530

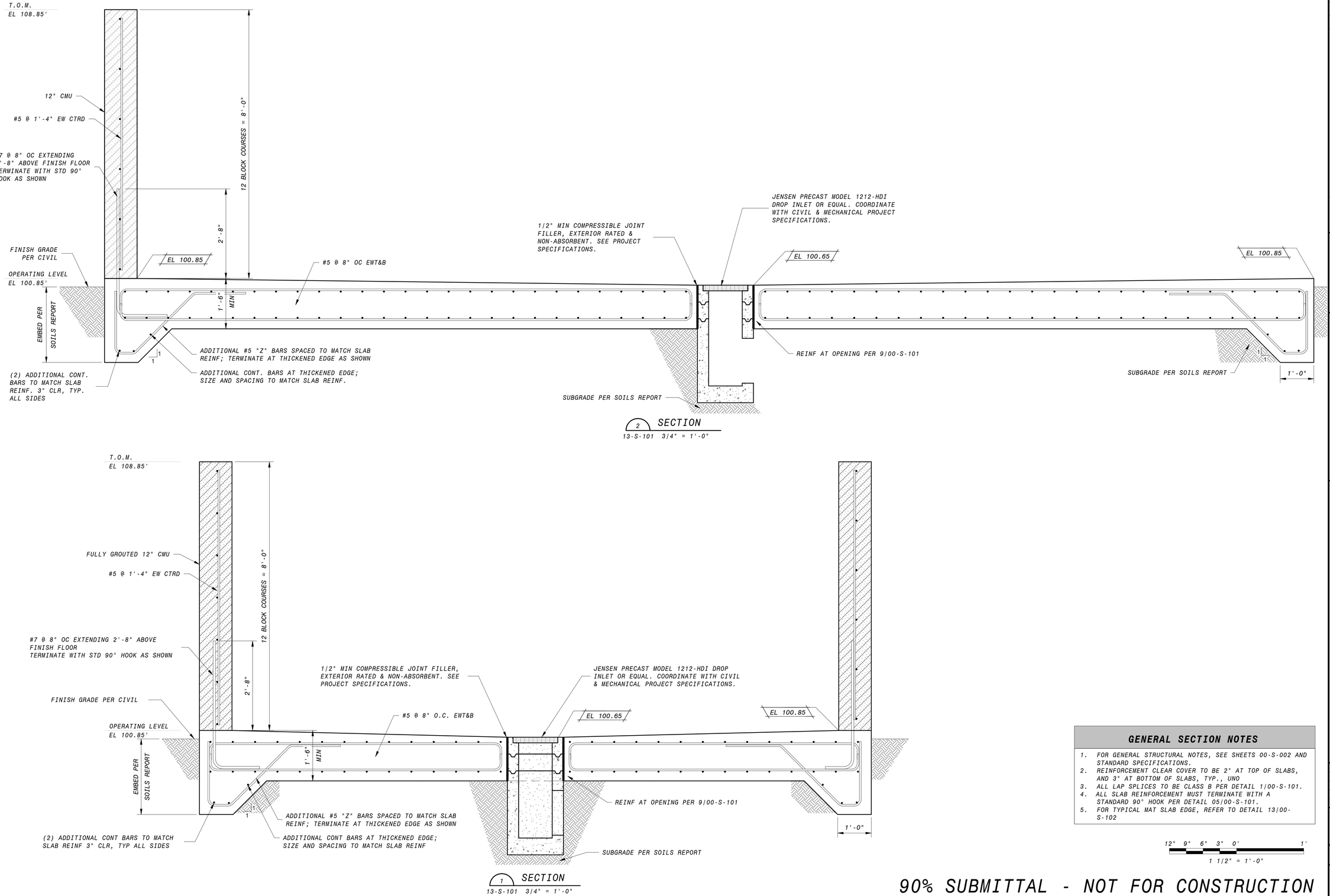

GENERAL SECTION NOTES

1. FOR GENERAL STRUCTURAL NOTES, SEE SHEETS 00-S-002 AND STANDARD SPECIFICATIONS.
2. REINFORCEMENT CLEAR COVER TO BE 2" AT TOP OF SLABS, AND 3" AT BOTTOM OF SLABS, TYP., UNO
3. ALL LAP SPLICES TO BE CLASS B PER DETAIL 1/00-S-101.
4. ALL SLAB REINFORCEMENT MUST TERMINATE WITH A STANDARD 90° HOOK PER DETAIL 05/00-S-101.
5. FOR TYPICAL MAT SLAB EDGE, REFER TO DETAIL 13/00-S-102

12" 9" 6" 3" 0" 1'

1 1/2" = 1'-0"

90% SUBMITTAL - NOT FOR CONSTRUCTION

NO.	BY	CHK	APP	DATE	REVISIONS AND RECORD OF USE

REGISTERED PROFESSIONAL ENGINEER
CHARLES R. ASHLEY JR.
S 5258
STRUCTURAL
STATE OF CALIFORNIA

Ashley & Vance ENGINEERING, INC
JOINT VENTURE
BLACK & VEATCH
FILANC

CITY OF MORRO BAY
FILANC BLACK & VEATCH DB PROPOSAL
RECLAMATION FACILITY (WRF)

WASH RACK
STRUCTURAL
SECTIONS

DESIGNED: M. MARSH
DETAILED: S. BENJAMIN
CHECKED: I. SHOEBRIDGE
APPROVED: C. ASHLEY
DATE:

0 1/2 1
IF THIS BAR DOES NOT MEASURE 1" THEN DRAWING IS NOT TO FULL SCALE

PROJECT NO.
400530

13-S-301
SHEET
OF

PLOTTED: 3/24/2020 11:32:31 AM
D400530

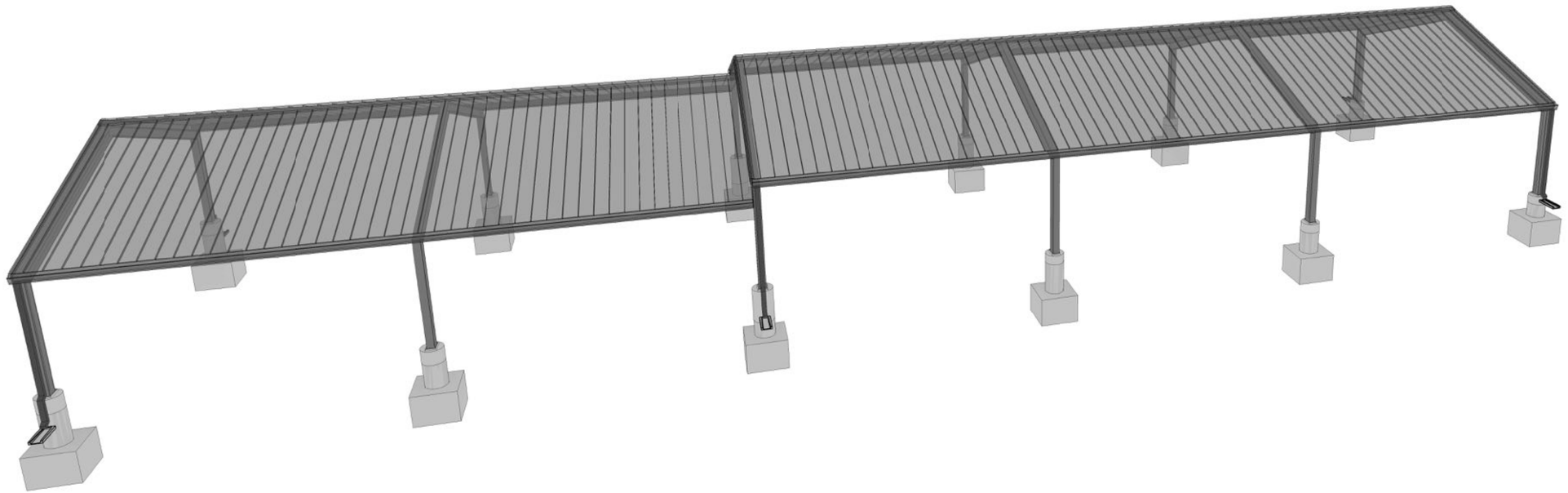

3D VIEW - SOUTHEAST

NO SCALE

90% SUBMITTAL - NOT FOR CONSTRUCTION

NO.	BY	CHK	APP	DATE	REVISIONS AND RECORD OF USE
A	EVB	BDF	EVB	3/5/2019	30% SUBMITTAL

REGISTERED PROFESSIONAL ENGINEER
CHARLES R. ASHLEY JR
S 5258
STRUCTURAL
STATE OF CALIFORNIA

Ashley & Vance ENGINEERING, INC
JOINT VENTURE
FILANC
BLACK & VEATCH

CITY OF MORRO BAY
MORRO BAY WATER
RECLAMATION FACILITY (WRF)

WRF PARKING CANOPY
STRUCTURAL
3D VIEW

DESIGNED: C. TAYLOR
DETAILED: S. BENJAMIN
CHECKED: I. SHOEBRIDGE
APPROVED: C. ASHLEY
DATE:

0 1/2 1
IF THIS BAR DOES NOT MEASURE 1" THEN DRAWING IS NOT TO FULL SCALE

PROJECT NO.
400530

14-S-001
SHEET
OF

PLOTTED: 3/24/2020 11:41:39 AM
D400530

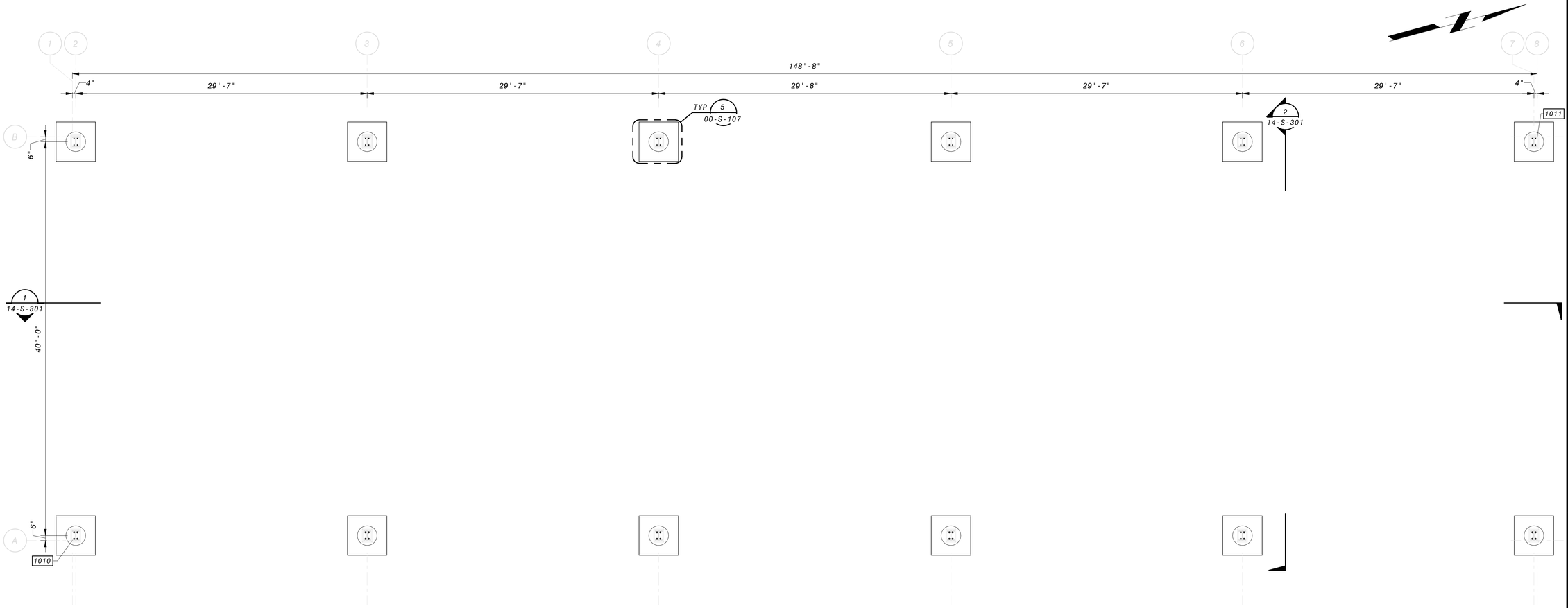

PLAN

3/16" = 1'-0"

NOTES:

1. DESIGN AND DRAWINGS FOR STEEL FRAME PRE-ENGINEERED METAL BUILDING TO BE PROVIDED BY BUILDING MFR. SEE SPECIFICATIONS FOR DESIGN CRITERIA.
2. FOUNDATION DESIGN HAS BEEN BASED ON THE FOLLOWING FRAME REACTIONS, ASSUMING A PINNED COLUMN BASE:
3. FRAME REACTIONS INCLUDE BOTH PRINCIPLE DIRECTIONS AND ORTHOGONAL COMBINATION EFFECTS.

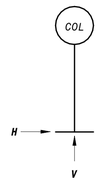

LOAD	VERTICAL V (K)	HORIZONTAL H (K)
DEAD	3.4	0.5
ROOF LIVE	7.7	1.0
SEISMIC	2.0	0.75
WIND (MAX)	10.5	2.5
WIND (MIN)	-10.5	-2.5

GENERAL FOUNDATION NOTES

1. PLEASE SEE SOILS REPORT FOR ADDITIONAL SPECIFICATIONS AND RECOMMENDATIONS. IT IS THE DESIGN BUILDER'S RESPONSIBILITY TO OBTAIN A COPY OF THE SOILS REPORT FROM THE OWNER OR OWNERS REPRESENTATIVE.
2. NOT USED.
3. FOR GENERAL STRUCTURAL NOTES, SEE SHEETS 00-S-002 AND STANDARD SPECIFICATIONS.
4. VERIFY ALL DIMENSIONS PRIOR TO COMMENCEMENT OF CONSTRUCTION.
5. ALL LAP SPLICES TO BE CLASS B PER DETAIL 1/00-S-101
6. COORDINATE COLUMN SIZE, LOCATION, AND ATTACHMENT WITH BUILDING MANUFACTURER PRIOR TO INSTALLATION.

6" 4' 2' 0' 5' 10'

3/16" = 1'-0"

90% SUBMITTAL - NOT FOR CONSTRUCTION

NO.	BY	CHK	APP	DATE	REVISIONS AND RECORD OF USE

REGISTERED PROFESSIONAL ENGINEER
CHARLES R. ASHLEY JR.
S 5258
STRUCTURAL
STATE OF CALIFORNIA

Ashley & Vance ENGINEERING, INC
JOINT VENTURE
BLACK & VEATCH
FILANC

CITY OF MORRO BAY
MORRO BAY WATER
RECLAMATION FACILITY (WRF)

WRF PARKING CANOPY
STRUCTURAL
PLAN

DESIGNED: C. TAYLOR
DETAILED: S. BENJAMIN
CHECKED: I. SHOEBRIDGE
APPROVED: C. ASHLEY
DATE:

0 1/2 1
IF THIS BAR DOES NOT MEASURE 1" THEN DRAWING IS NOT TO FULL SCALE

PROJECT NO.
400530

14-S-101
SHEET
OF

PLOTTED: 3/24/2020 11:41:39 AM
D400530

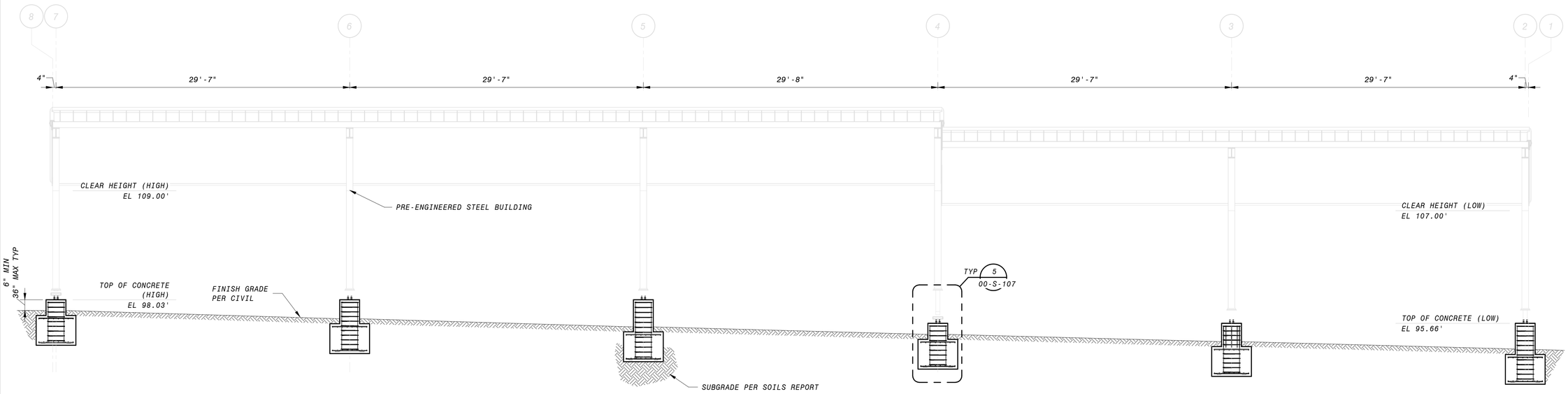

1 SECTION
14-S-101 3/16" = 1'-0"

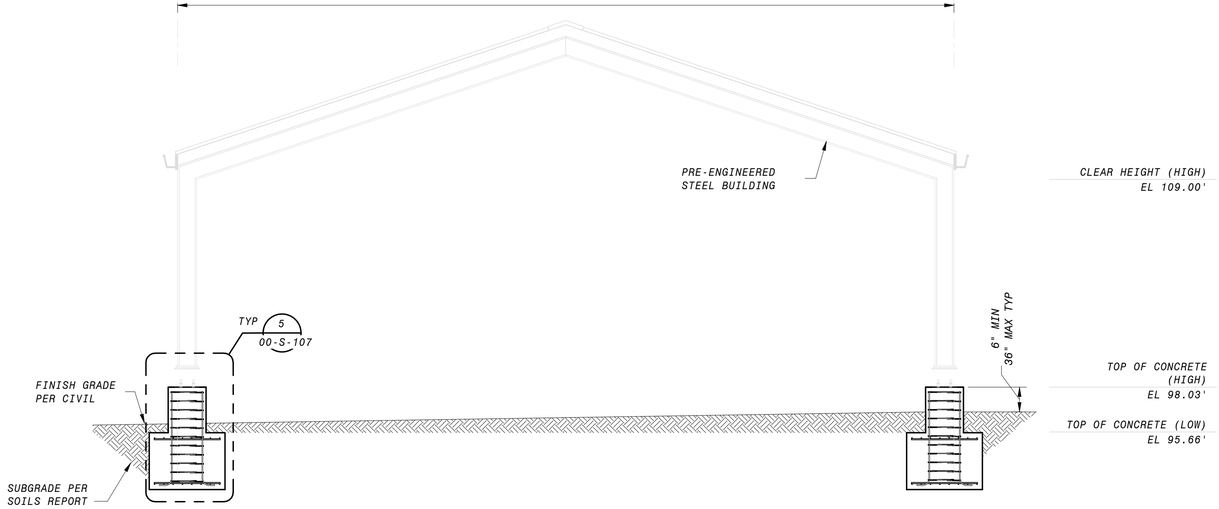

2 SECTION
14-S-101 1/4" = 1'-0"

GENERAL SECTION NOTES

1. FOR GENERAL STRUCTURAL NOTES, SEE SHEETS 00-S-002 AND STANDARD SPECIFICATIONS.
2. REINFORCEMENT CLEAR COVER TO BE 3" TYP., UNO
3. ALL LAP SPLICES TO BE CLASS B PER DETAIL 1/00-S-101.

6" 4' 2' 0' 5' 10'
3/16" = 1'-0"

4' 2' 0' 4' 8'
1/4" = 1'-0"

90% SUBMITTAL - NOT FOR CONSTRUCTION

NO.	BY	CHK	APP	DATE	REVISIONS AND RECORD OF USE

REGISTERED PROFESSIONAL ENGINEER
CHARLES R. ASHLEY JR.
S 5258
STRUCTURAL
STATE OF CALIFORNIA

Ashley & Vance ENGINEERING, INC
JOINT VENTURE
BLACK & VEATCH
FILANC

CITY OF MORRO BAY
MORRO BAY WATER
RECLAMATION FACILITY (WRF)

WRF PARKING CANOPY
STRUCTURAL
SECTIONS

DESIGNED: C. TAYLOR
DETAILED: S. BENJAMIN
CHECKED: I. SHOEBRIDGE
APPROVED: C. ASHLEY
DATE:

0 1/2 1
IF THIS BAR DOES NOT MEASURE 1" THEN DRAWING IS NOT TO FULL SCALE

PROJECT NO.
400530

14-S-301
SHEET
OF

PLOTTED: 3/24/2020 11:41:41 AM
D400530

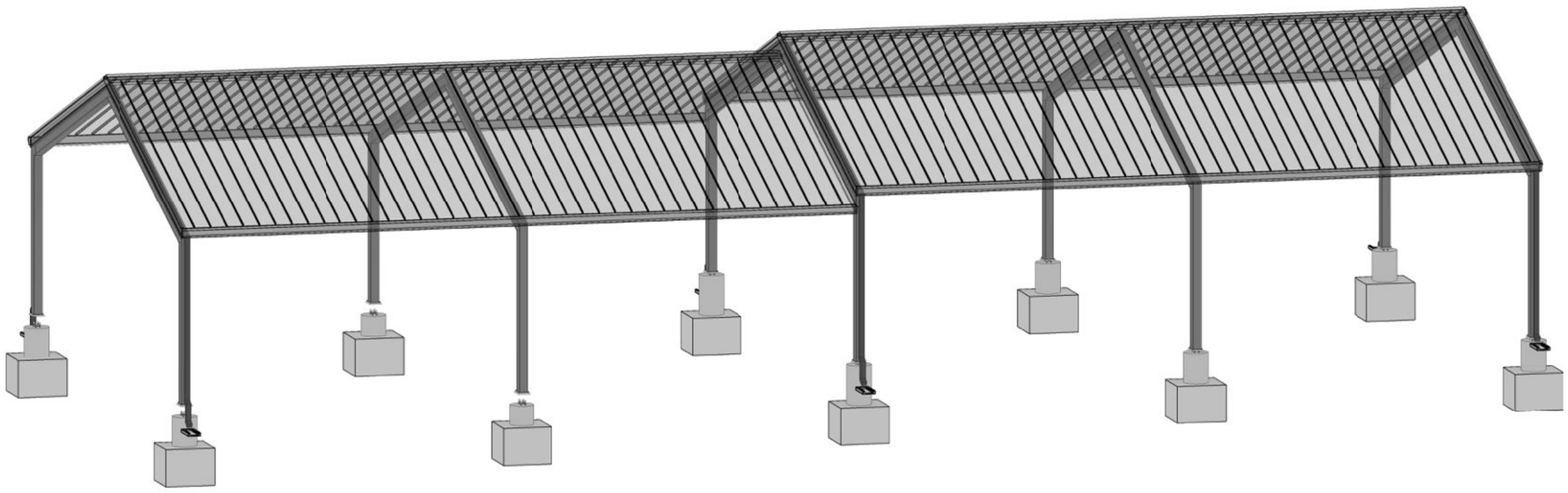

WRF EQUIPMENT STORAGE CANOPY

3D VIEW - SOUTHEAST

NO SCALE

90% SUBMITTAL - NOT FOR CONSTRUCTION

DATE	REVISIONS AND RECORD OF USE	NO.	BY	CHK	APP

REGISTERED PROFESSIONAL ENGINEER
CHARLES R. ASHLEY JR.
S 5258
STRUCTURAL
STATE OF CALIFORNIA

Ashley & Vance ENGINEERING, INC

JOINT VENTURE

BLACK & VEATCH

FILANC

CITY OF MORRO BAY
FILANC BLACK & VEATCH DB PROPOSAL
MORRO BAY WRF

WATER AND COLLECTION VEHICLES EQUIPMENT STORAGE
STRUCTURAL
3D VIEW

DESIGNED: C. TAYLOR
DETAILED: S. BENJAMIN
CHECKED: I. SHOEBRIDGE
APPROVED: C. ASHLEY
DATE:

0 1/2 1
IF THIS BAR DOES NOT MEASURE 1" THEN DRAWING IS NOT TO FULL SCALE

PROJECT NO.
400530

15-S-001
SHEET
OF

PLOTTED: 3/24/2020 11:47:04 AM
D400530

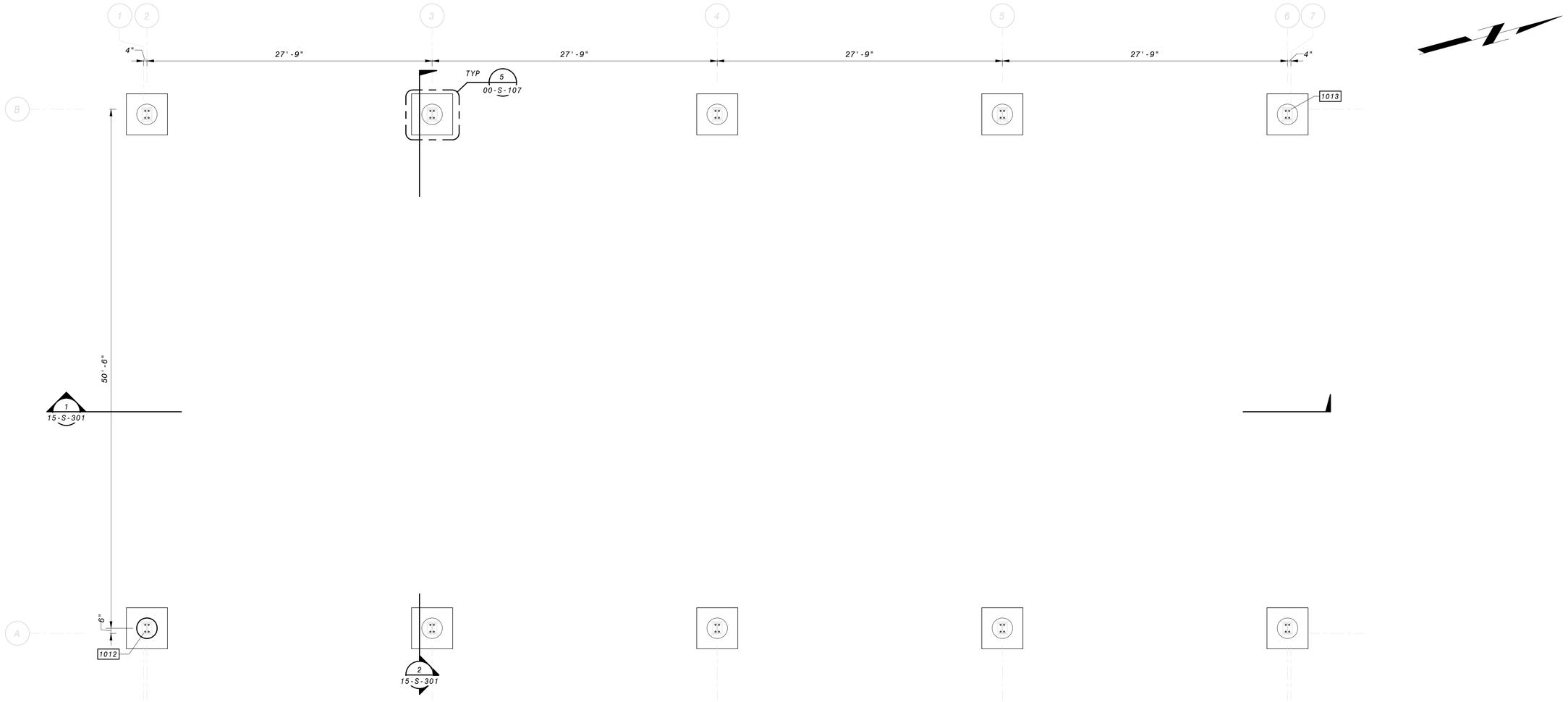

PLAN

3/16" = 1'-0"

NOTES:

1. DESIGN AND DRAWINGS FOR STEEL FRAME PRE-ENGINEERED METAL BUILDING TO BE PROVIDED BY BUILDING MFR. SEE SPECIFICATIONS FOR DESIGN CRITERIA.
2. FOUNDATION DESIGN HAS BEEN BASED ON THE FOLLOWING FRAME REACTIONS, ASSUMING A PINNED COLUMN BASE:
3. FRAME REACTIONS INCLUDE BOTH PRINCIPLE DIRECTIONS AND ORTHOGONAL COMBINATION EFFECTS.

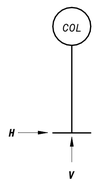

LOAD	VERTICAL V (K)	HORIZONTAL H (K)
DEAD	3.4	0.5
ROOF LIVE	7.7	1.0
SEISMIC	2.0	0.75
WIND (MAX)	10.5	2.5
WIND (MIN)	-10.5	-2.5

GENERAL FOUNDATION NOTES

1. PLEASE SEE SOILS REPORT FOR ADDITIONAL SPECIFICATIONS AND RECOMMENDATIONS. IT IS THE DESIGN BUILDER'S RESPONSIBILITY TO OBTAIN A COPY OF THE SOILS REPORT FROM THE OWNER OR OWNERS REPRESENTATIVE.
2. NOT USED
3. FOR GENERAL STRUCTURAL NOTES, SEE SHEETS 00-S-002 AND STANDARD SPECIFICATIONS.
4. VERIFY ALL DIMENSIONS PRIOR TO COMMENCEMENT OF CONSTRUCTION.
5. ALL LAP SPLICES TO BE CLASS B PER DETAIL 1/00-S-101
6. COORDINATE COLUMN SIZE, LOCATION, AND ATTACHMENT WITH BUIDLING MANUFACTURER PRIOR TO INSTALLATION.

6" 4' 2' 0' 5' 10'

3/16" = 1'-0"

90% SUBMITTAL - NOT FOR CONSTRUCTION

NO.	BY	CHK	APP	DATE	REVISIONS AND RECORD OF USE

REGISTERED PROFESSIONAL ENGINEER
CHARLES R. ASHLEY JR.
S 5258
STRUCTURAL
STATE OF CALIFORNIA

Ashley & Vance ENGINEERING, INC
JOINT VENTURE
BLACK & VEATCH
FILANC

CITY OF MORRO BAY
FILANC BLACK & VEATCH DB PROPOSAL
MORRO BAY WRF

WATER AND COLLECTION VEHICLES EQUIPMENT STORAGE
STRUCTURAL
PLAN

DESIGNED: C. TAYLOR
DETAILED: S. BENJAMIN
CHECKED: I. SHOEBRIDGE
APPROVED: C. ASHLEY
DATE:

0 1/2 1
IF THIS BAR DOES NOT MEASURE 1" THEN DRAWING IS NOT TO FULL SCALE

PROJECT NO.
400530

15-S-101
SHEET
OF

PLOTTED: 3/24/2020 11:47:05 AM
D400530

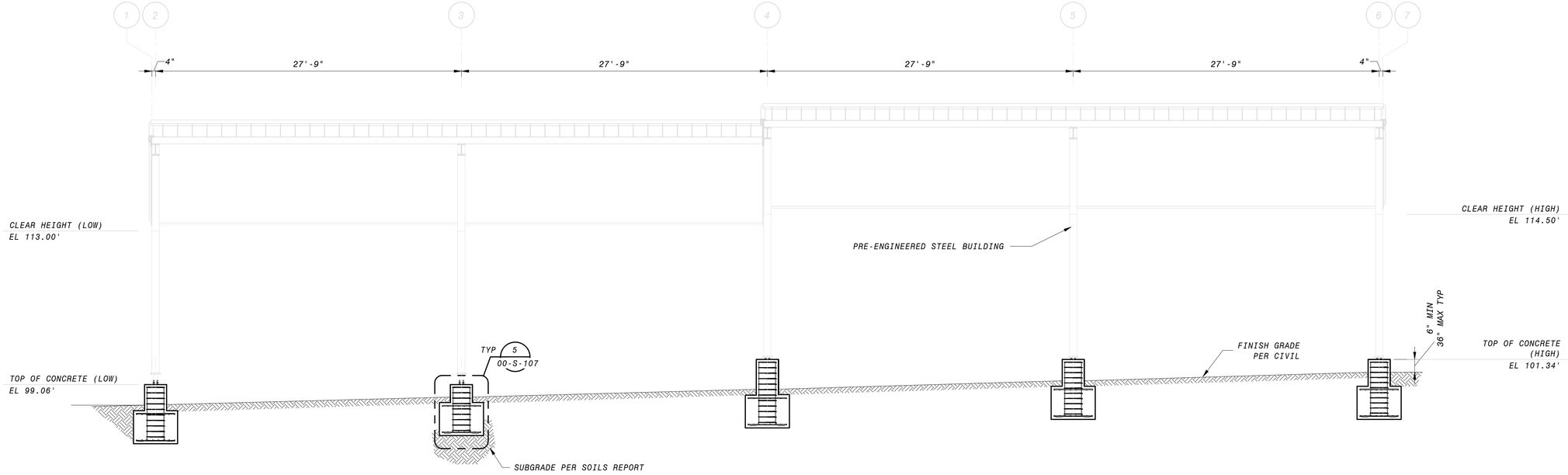

1 SECTION
15-S-101 3/16" = 1'-0"

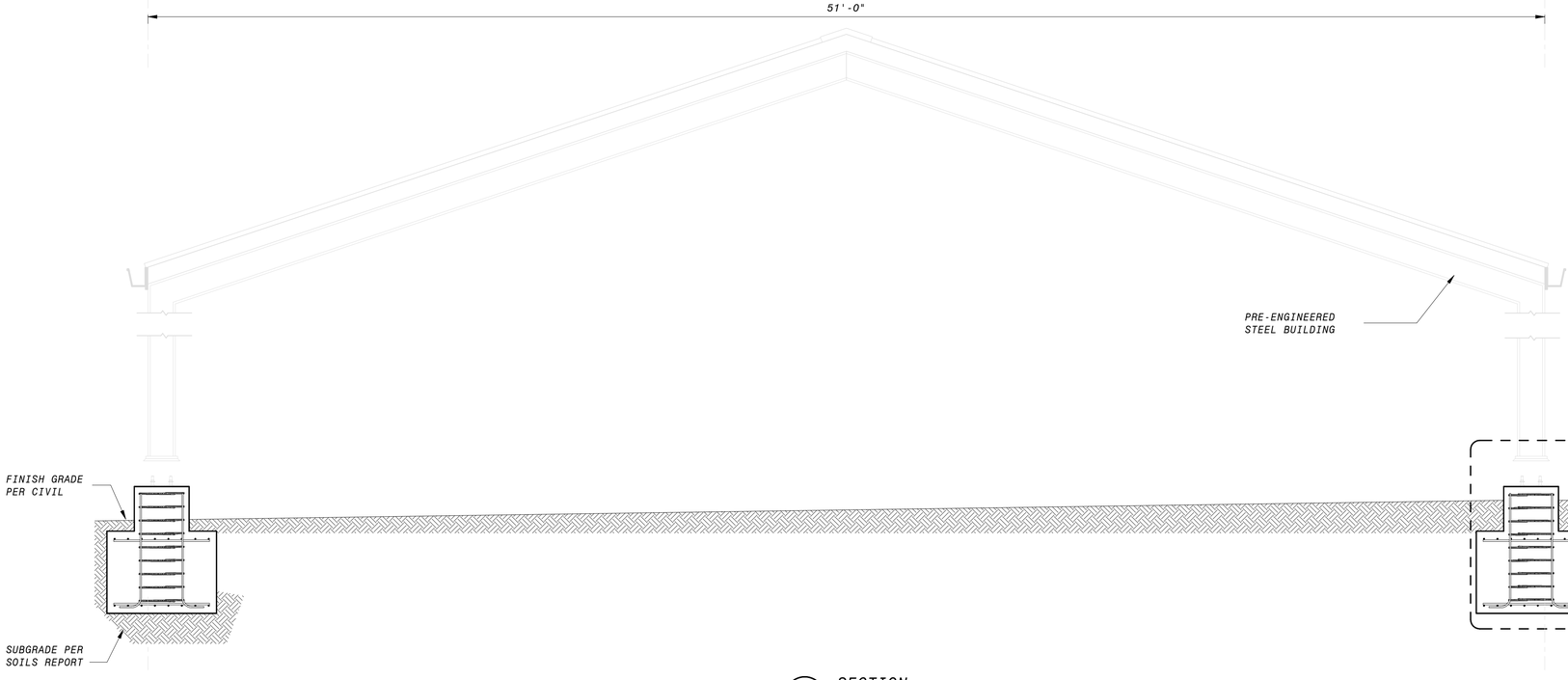

2 SECTION
15-S-101 3/8" = 1'-0"

GENERAL SECTION NOTES

1. FOR GENERAL STRUCTURAL NOTES, SEE SHEETS 00-S-002 AND STANDARD SPECIFICATIONS.
2. REINFORCEMENT CLEAR COVER TO BE 3" TYP., UNO
3. ALL LAP SPLICES TO BE CLASS B PER DETAIL 1/00-S-101.

6" 4' 2' 0' 5' 10'
3/16" = 1'-0"

12" 0' 1' 2' 3' 4' 5' 6' 7'
3/8" = 1'-0"

90% SUBMITTAL - NOT FOR CONSTRUCTION

NO.	BY	CHK	APP	DATE	REVISIONS AND RECORD OF USE

REGISTERED PROFESSIONAL ENGINEER
CHARLES R. ASHLEY JR.
S 5258
STRUCTURAL
STATE OF CALIFORNIA

Ashley & Vance ENGINEERING, INC
JOINT VENTURE
BLACK & VEATCH
FILANC

CITY OF MORRO BAY
FILANC BLACK & VEATCH DB PROPOSAL
MORRO BAY WRF

WATER AND COLLECTION VEHICLES EQUIPMENT STORAGE
STRUCTURAL SECTIONS

DESIGNED: C. TAYLOR
DETAILED: S. BENJAMIN
CHECKED: I. SHOEBRIDGE
APPROVED: C. ASHLEY
DATE:

0 1/2 1
IF THIS BAR DOES NOT MEASURE 1" THEN DRAWING IS NOT TO FULL SCALE

PROJECT NO.
400530

15-S-301
SHEET
OF

PLOTTED: 3/24/2020 11:47:07 AM
D400530

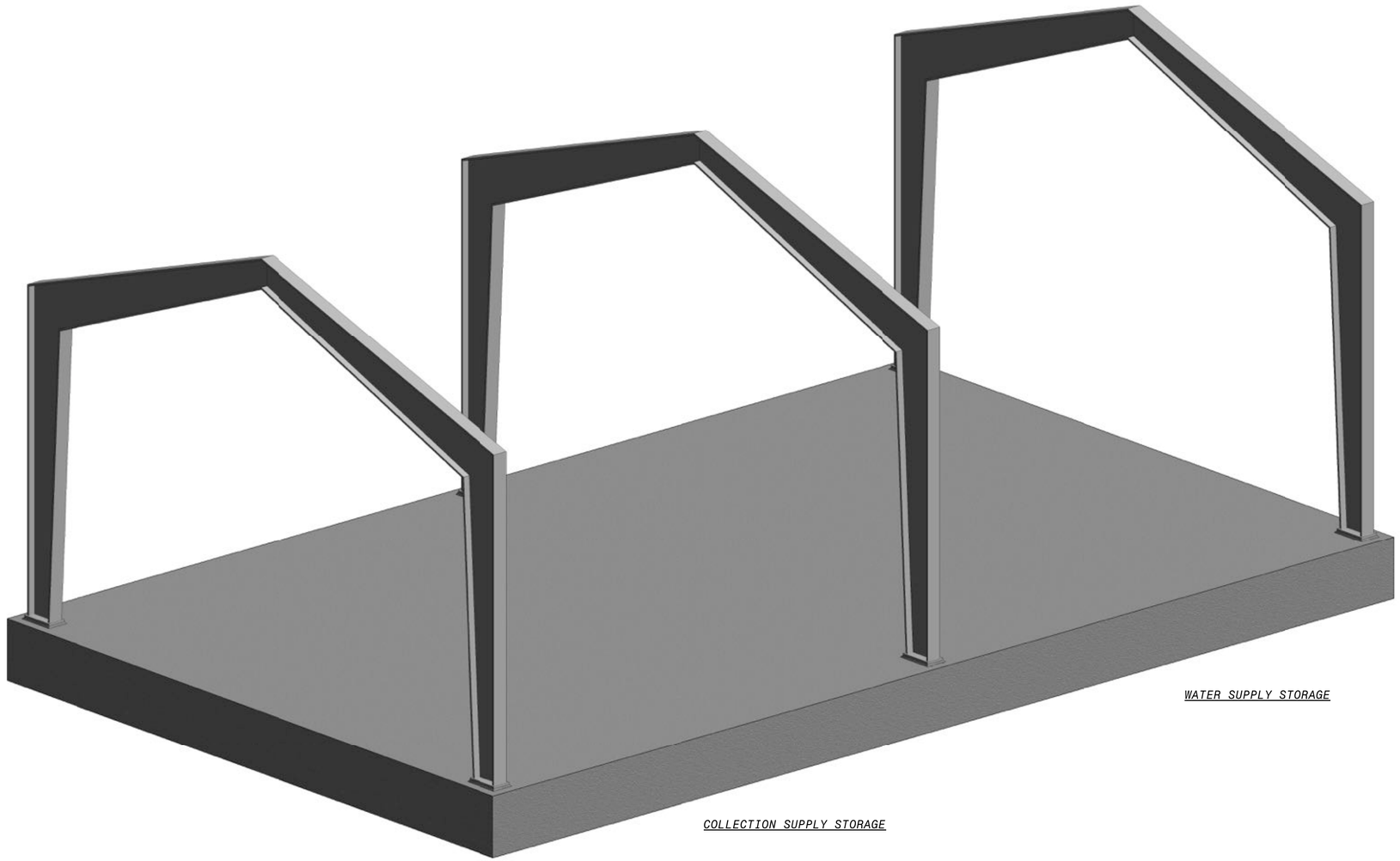

WATER SUPPLY STORAGE

COLLECTION SUPPLY STORAGE

3D VIEW - NORTHEAST

NO SCALE

90% SUBMITTAL - NOT FOR CONSTRUCTION

NO.	BY	CHK	APP	DATE	REVISIONS AND RECORD OF USE
A	EVB	BDF	EVB	3/5/2019	30% SUBMITTAL

REGISTERED PROFESSIONAL ENGINEER
CHARLES R. ASHLEY JR.
S 5258
STRUCTURAL
STATE OF CALIFORNIA

Ashley & Vance ENGINEERING, INC

JOINT VENTURE

BLACK & VEATCH

FILANC

CITY OF MORRO BAY
MORRO BAY WATER
RECLAMATION FACILITY (WRF)

WATER AND COLLECTION SUPPLIES STORAGE SHEDS
STRUCTURAL
3D VIEW

DESIGNED: M. MARSH
DETAILED: S. BENJAMIN
CHECKED: I. SHOEBRIDGE
APPROVED: C. ASHLEY
DATE: XX/XX/XXXX

0 1/2 1
IF THIS BAR DOES NOT MEASURE 1" THEN DRAWING IS NOT TO FULL SCALE

PROJECT NO.
400530

16-S-001
SHEET
OF

PLOTTED: 3/24/2020 11:49:03 AM
D400530

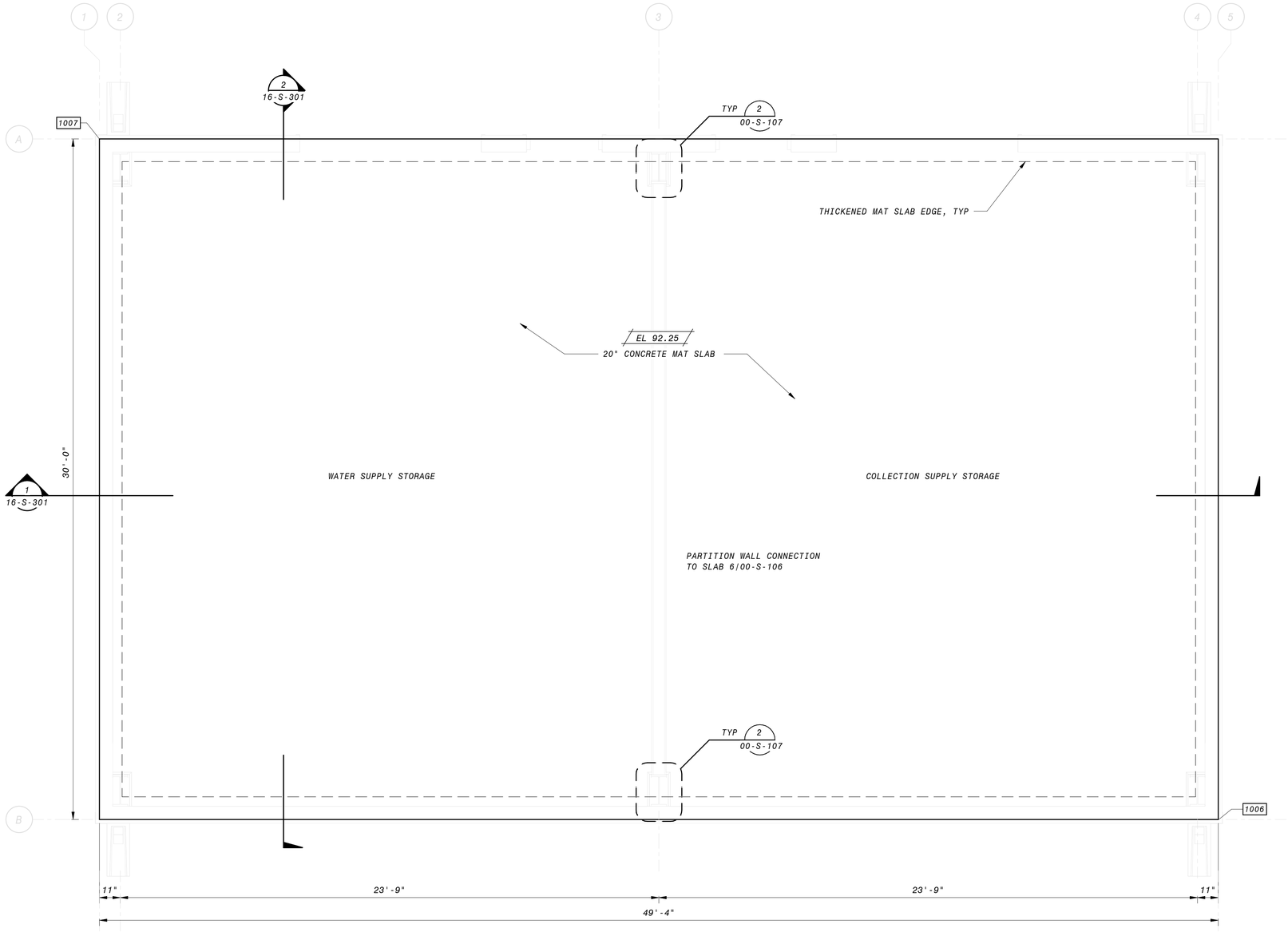

OPERATING FLOOR PLAN

3/8" = 1'-0"

GENERAL FOUNDATION NOTES

1. PLEASE SEE SOILS REPORT FOR ADDITIONAL SPECIFICATIONS AND RECOMMENDATIONS. IT IS THE DESIGN BUILDER'S RESPONSIBILITY TO OBTAIN A COPY OF THE SOILS REPORT FROM THE OWNER OR OWNERS REPRESENTATIVE.
2. NOT USED.
3. FOR GENERAL STRUCTURAL NOTES, SEE SHEETS 00-S-002 AND STANDARD SPECIFICATIONS.
4. VERIFY ALL DIMENSIONS PRIOR TO COMMENCEMENT OF CONSTRUCTION.
5. OUTSIDE LAYER OF MAT SLAB REINFORCEMENT TO BE PLACED IN THE SHORT DIRECTION. INSIDE LAYER OF MAT SLAB REINFORCEMENT TO BE PLACED IN THE LONG DIRECTION. TYPICAL, UNLESS NOTED OTHERWISE.
6. ALL LAP SPLICES TO BE CLASS B PER DETAIL 1/00-S-101
7. REFER TO MECHANICAL/ELECTRICAL/PLUMBING DRAWINGS FOR SIZE AND LOCATIONS OF PIPE PENETRATIONS AND SLAB OPENINGS. SEE DETAIL 9/00-S-101 FOR TYPICAL REINFORCEMENT REQUIREMENTS. COORDINATE PIPE PENETRATION SEAL WITH MECHANICAL ENGINEER OF RECORD.
8. ALL SLAB REINFORCEMENT MUST TERMINATE WITH A STANDARD 90° HOOK PER DETAIL 5/00-S-101.
9. FOR TYPICAL MAT SLAB EDGE, REFER TO DETAIL 13/00-S-102.
10. COORDINATE LOCATION AND DETAILING FOR ATTACHMENT OF MECHANICAL SUPPORTS WITH BUILDING MANUFACTURER AND MECHANICAL ENGINEER OF RECORD PRIOR TO INSTALLATION.
11. COORDINATE ALL INTERIOR WALLS WITH ARCHITECTURAL DRAWINGS. SEE SHEET 00-S-106 AND PROJECT SPECIFICATIONS FOR ADDITIONAL INFORMATION
12. COORDINATE COLUMN SIZE, LOCATION, AND ATTACHMENT WITH BUILDING MANUFACTURER PRIOR TO INSTALLATION.
13. SEE DETAIL 2/00-S-102 FOR TYP MAT SLAB ON GRADE.

NOTES:

1. DESIGN AND DRAWINGS FPR STEEL FRAME PRE-ENGINEERED METAL BUILDING TO BE PROVIDED BY BUILDING MFR. SEE SPECIFICATIONS FOR DESIGN CRITERIA.
2. FOUNDATION DESIGN HAS BEEN BASED ON THE FOLLOWING FRAME REACTIONS, ASSUMING A PINNED COLUMN BASE:

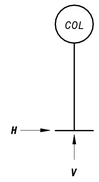

LOAD	VERTICAL V (K)	HORIZONTAL H (K)
DEAD	3.5	0.5
ROOF LIVE	6.5	1.5
SEISMIC	5.0	5.0
WIND (MAX)	7.0	13.5
WIND (MIN)	-14.5	4.0

3. FOUNDATION HAS BEEN DESIGNED FOR A LIVE LOAD OF 250 PSF.
4. FRAME REACTIONS INCLUDE BOTH PRINCIPLE DIRECTIONS AND ORTHOGONAL COMBINATION EFFECTS.

12" 0' 1' 2' 3' 4' 5' 6' 7'

3/8" = 1'-0"

90% SUBMITTAL - NOT FOR CONSTRUCTION

NO.	BY	CHK	APP	DATE	REVISIONS AND RECORD OF USE

REGISTERED PROFESSIONAL ENGINEER
CHARLES R. ASHLEY JR.
S 5258
STRUCTURAL
STATE OF CALIFORNIA

Ashley & Vance ENGINEERING, INC
JOINT VENTURE
BLACK & VEATCH
FILANC

CITY OF MORRO BAY
MORRO BAY WATER
RECLAMATION FACILITY (WRF)

WATER AND COLLECTION SUPPLIES STORAGE SHEDS
STRUCTURAL
FOUNDATION PLAN

DESIGNED: M. MARSH
DETAILED: S. BENJAMIN
CHECKED: I. SHOEBRIDGE
APPROVED: C. ASHLEY
DATE: XX/XX/XXXX

0 1/2 1
IF THIS BAR DOES NOT MEASURE 1" THEN DRAWING IS NOT TO FULL SCALE

PROJECT NO.
400530

16-S-101
SHEET
OF

PLOTTED: 3/24/2020 11:49:03 AM
D400530

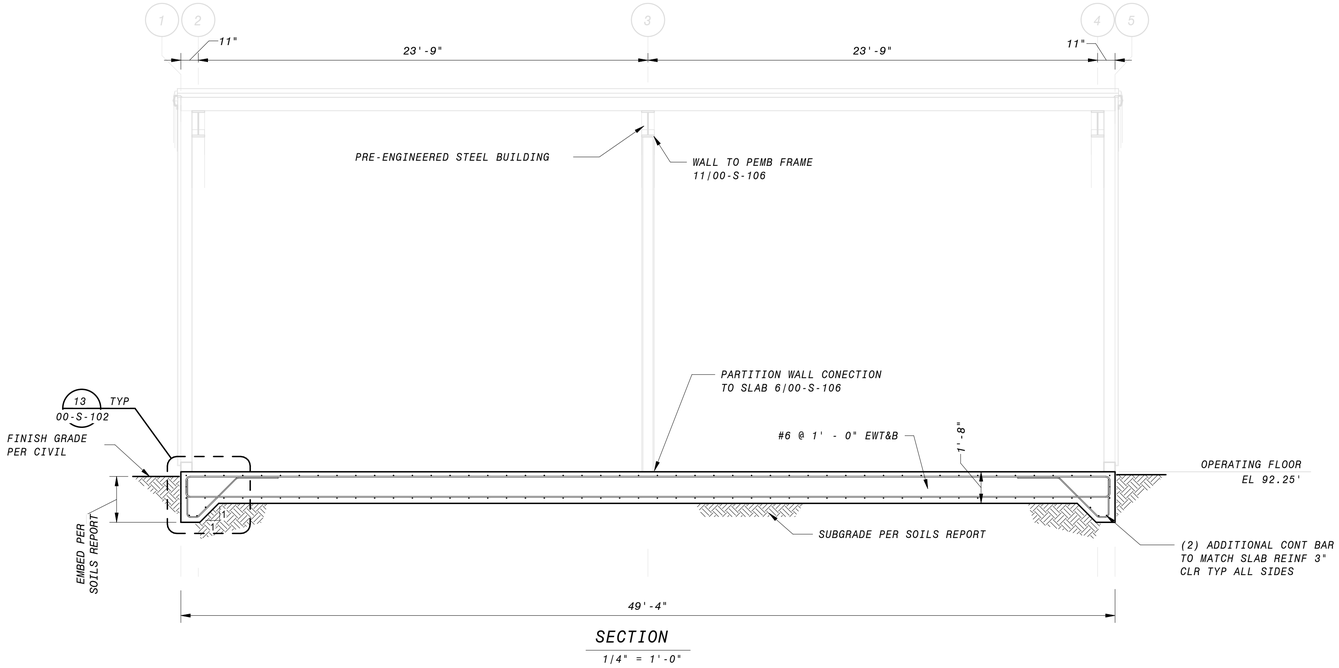

SECTION

1/4" = 1'-0"

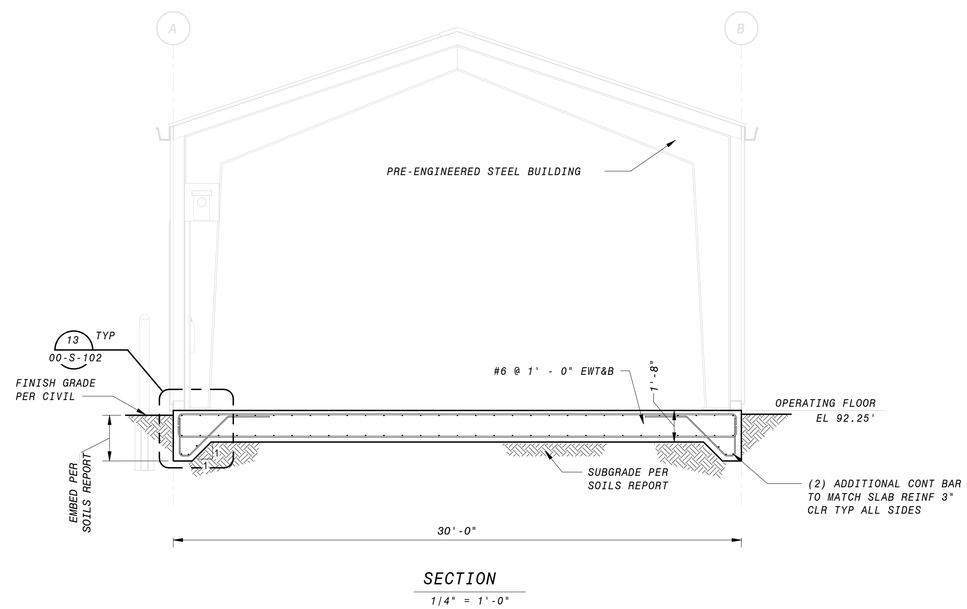

SECTION

1/4" = 1'-0"

GENERAL SECTION NOTES

1. FOR GENERAL STRUCTURAL NOTES, SEE SHEETS 00-S-002 AND STANDARD SPECIFICATIONS.
2. REINFORCEMENT CLEAR COVER TO BE 2" EF FOR WALLS, 2" AT TOP OF SLABS, AND 3" AT BOTTOM OF SLABS, TYP., UNO
3. ALL LAP SPLICES TO BE CLASS B PER DETAIL 1/00-S-101.
4. REFER TO MECHANICAL DRAWINGS FOR SIZE AND LOCATIONS OF PIPE PENETRATIONS AND SLAB OPENINGS. SEE DETAIL 9/00-S-101 FOR TYPICAL REINFORCEMENT REQUIREMENTS. COORDINATE PIPE PENETRATION SEAL WITH MECHANICAL EOR (WHERE OCCURS).
5. ALL SLAB REINFORCEMENT MUST TERMINATE WITH A STANDARD 90° HOOK PER DETAIL 05/00-S-101.
6. COORDINATE LOCATION AND DETAILING FOR ATTACHMENT OF MECHANICAL SUPPORTS WITH BUILDING MANUFACTURER AND MECHANICAL ENGINEER OF RECORD PRIOR TO INSTALLATION.
7. COORDINATE ALL INTERIOR WALLS WITH ARCHITECTURAL DRAWINGS. SEE SHEET 00-S-106 AND PROJECT SPECIFICATIONS FOR ADDITIONAL INFORMATION

4' 2' 0' 4' 8'

1/4" = 1'-0"

90% SUBMITTAL - NOT FOR CONSTRUCTION

NO.	BY	CHK	APP	DATE	REVISIONS AND RECORD OF USE

REGISTERED PROFESSIONAL ENGINEER
CHARLES R. ASHLEY JR.
S 5258
STRUCTURAL
STATE OF CALIFORNIA

Ashley & Vance ENGINEERING, INC

JOINT VENTURE

BLACK & VEATCH

FILANC

CITY OF MORRO BAY
MORRO BAY WATER
RECLAMATION FACILITY (WRF)

WATER AND COLLECTION SUPPLIES STORAGE SHEDS
STRUCTURAL
SECTIONS

DESIGNED: M. MARSH
DETAILED: S. BENJAMIN
CHECKED: I. SHOEBRIDGE
APPROVED: C. ASHLEY
DATE: XX/XX/XXXX

0 1/2 1

IF THIS BAR DOES NOT MEASURE 1" THEN DRAWING IS NOT TO FULL SCALE

PROJECT NO.
400530

16-S-301
SHEET
OF

PLOTTED: 3/24/2020 11:49:04 AM
D400530

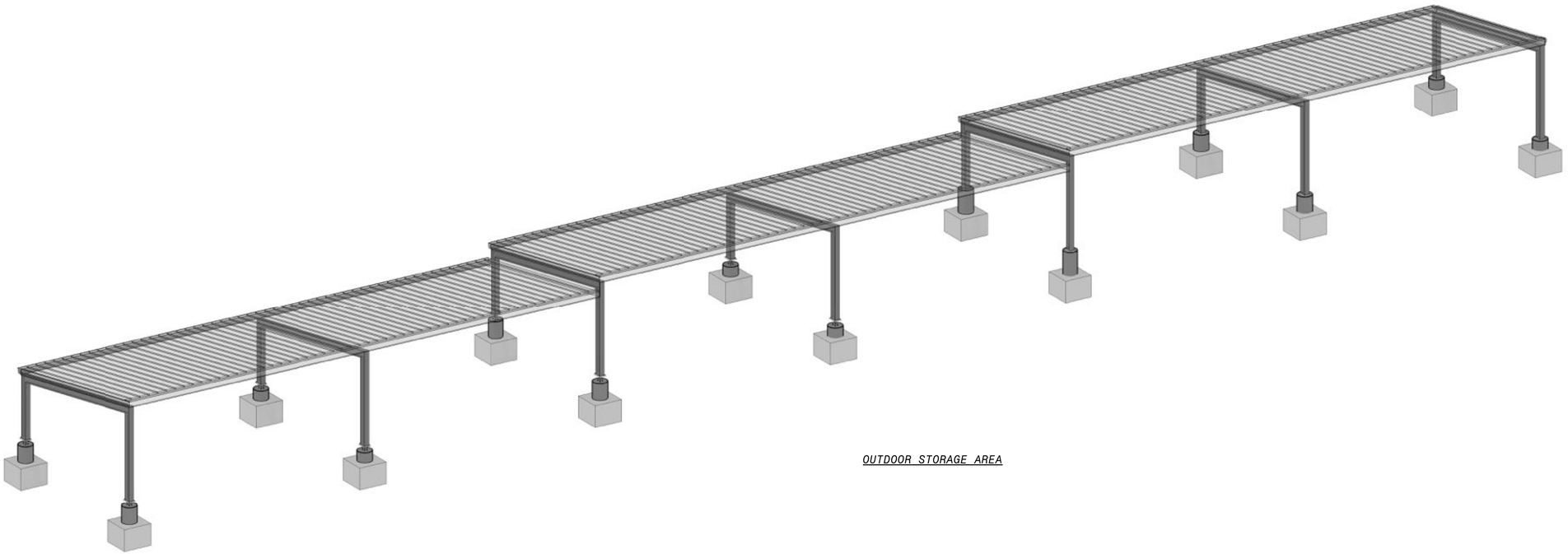

OUTDOOR STORAGE AREA

3D VIEW - SOUTH

90% SUBMITTAL - NOT FOR CONSTRUCTION

NO.	BY	CHK	APP	DATE	REVISIONS AND RECORD OF USE

REGISTERED PROFESSIONAL ENGINEER
CHARLES R. ASHLEY JR.
S 5258
STRUCTURAL
STATE OF CALIFORNIA

Ashley & Vance ENGINEERING, INC

JOINT VENTURE

FILANC BLACK & VEATCH

CITY OF MORRO BAY
MORRO BAY WATER
RECLAMATION FACILITY (WRF)

CORPORATION YARD AREA
STRUCTURAL
3D VIEW

DESIGNED: C. TAYLOR
DETAILED: S. BENJAMIN
CHECKED: I. SHOEBRIDGE
APPROVED: C. ASHLEY
DATE:

0 1/2 1
IF THIS BAR DOES NOT MEASURE 1" THEN DRAWING IS NOT TO FULL SCALE

PROJECT NO.
400530

17-S-001
SHEET
OF

PLOTTED: 3/24/2020 11:52:18 AM
D400530

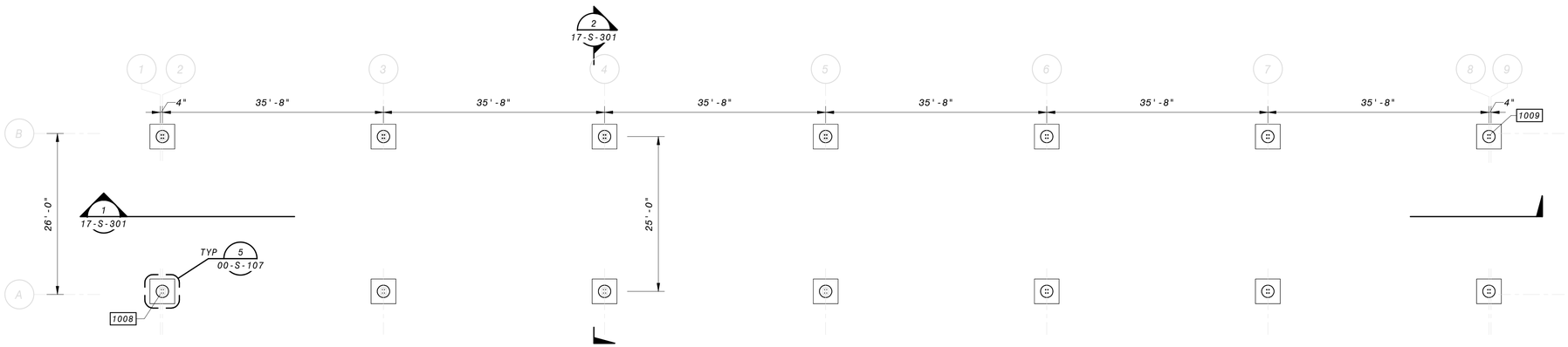

PLAN

3/32" = 1'-0"

NOTES:

1. DESIGN AND DRAWINGS FOR STEEL FRAME PRE-ENGINEERED METAL BUILDING TO BE PROVIDED BY BUILDING MFR. SEE SPECIFICATIONS FOR DESIGN CRITERIA.
2. FOUNDATION DESIGN HAS BEEN BASED ON THE FOLLOWING FRAME REACTIONS, ASSUMING A PINNED COLUMN BASE:
3. FRAME REACTIONS INCLUDE BOTH PRINCIPLE DIRECTIONS AND ORTHOGONAL COMBINATION EFFECTS.

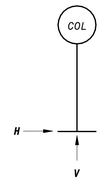

LOAD	VERTICAL V (K)	HORIZONTAL H (K)
DEAD	3.4	0.5
ROOF LIVE	7.7	1.0
SEISMIC	2.0	0.75
WIND (MAX)	10.5	2.5
WIND (MIN)	-10.5	-2.5

GENERAL FOUNDATION NOTES

1. PLEASE SEE SOILS REPORT FOR ADDITIONAL SPECIFICATIONS AND RECOMMENDATIONS. IT IS THE DESIGN BUILDER'S RESPONSIBILITY TO OBTAIN A COPY OF THE SOILS REPORT FROM THE OWNER OR OWNERS REPRESENTATIVE.
2. NOT USED.
3. FOR GENERAL STRUCTURAL NOTES, SEE SHEETS 00-S-002 AND STANDARD SPECIFICATIONS.
4. VERIFY ALL DIMENSIONS PRIOR TO COMMENCEMENT OF CONSTRUCTION.
5. ALL LAP SPLICES TO BE CLASS B PER DETAIL 1/00-S-101
6. COORDINATE COLUMN SIZE, LOCATION, AND ATTACHMENT WITH BUILDING MANUFACTURER PRIOR TO INSTALLATION.

12' 8' 4' 0' 10' 20'

3/32" = 1'-0"

90% SUBMITTAL - NOT FOR CONSTRUCTION

NO.	BY	CHK	APP	DATE	REVISIONS AND RECORD OF USE

REGISTERED PROFESSIONAL ENGINEER
CHARLES R. ASHLEY JR.
S 5258
STRUCTURAL
STATE OF CALIFORNIA

Ashley & Vance ENGINEERING, INC
JOINT VENTURE
BLACK & VEATCH
FILANC

CITY OF MORRO BAY
MORRO BAY WATER
RECLAMATION FACILITY (WRF)

OUTDOOR STORAGE AREA
STRUCTURAL
PLAN

DESIGNED: C. TAYLOR
DETAILED: S. BENJAMIN
CHECKED: I. SHOEBRIDGE
APPROVED: C. ASHLEY
DATE:

0 1/2 1
IF THIS BAR DOES NOT MEASURE 1" THEN DRAWING IS NOT TO FULL SCALE

PROJECT NO.
400530

17-S-101
SHEET
OF

PLOTTED: 3/24/2020 11:52:19 AM
D400530

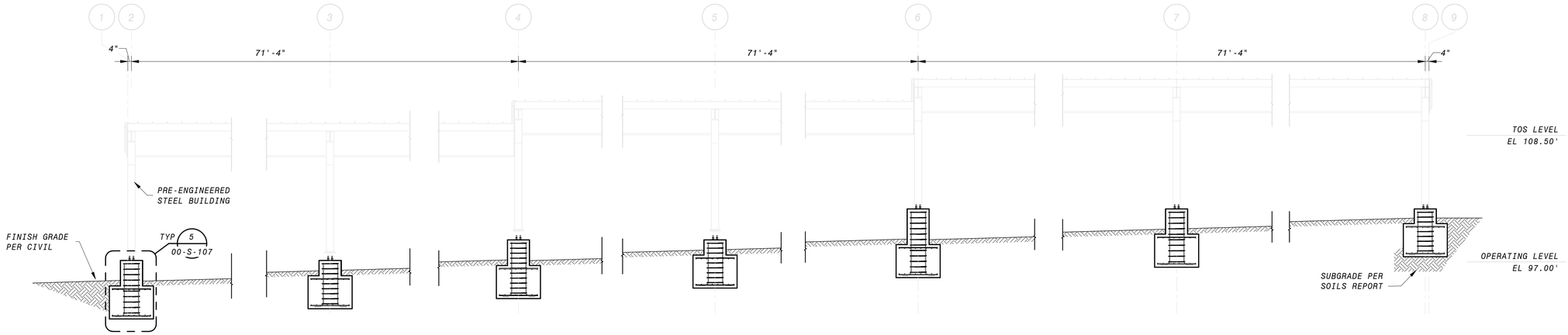

1 SECTION
17-S-101 3/16" = 1'-0"

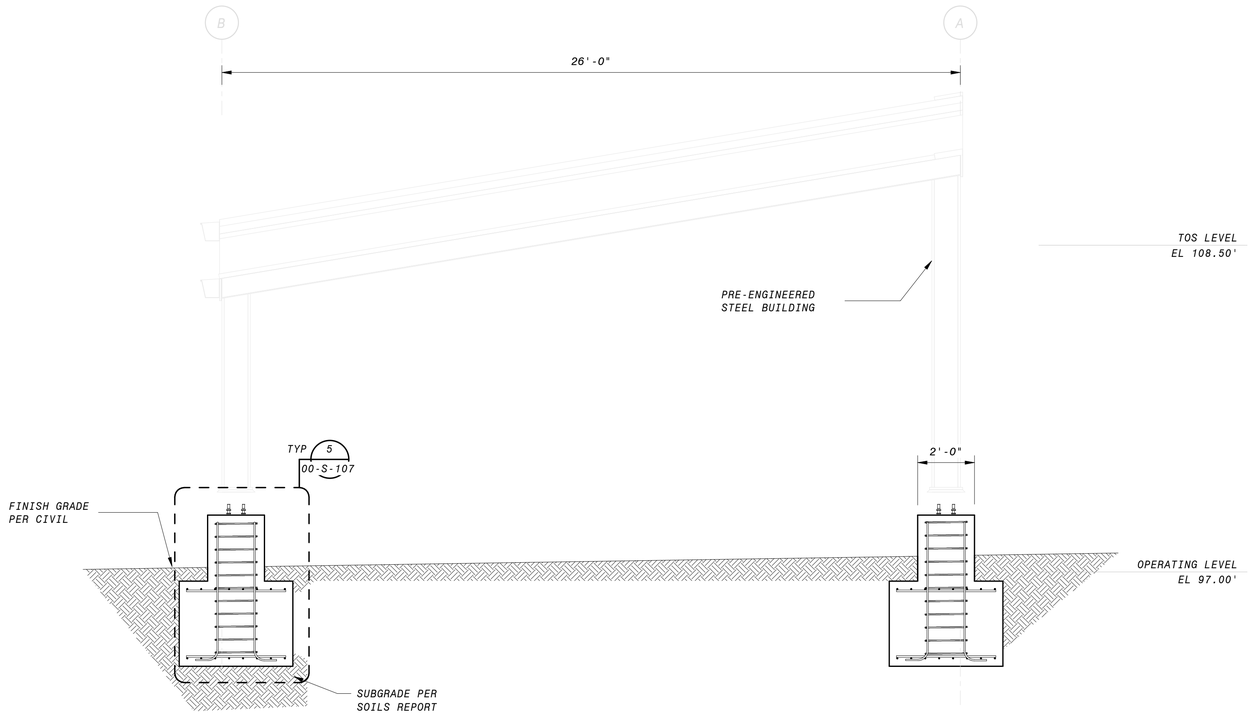

2 SECTION
17-S-101 3/8" = 1'-0"

GENERAL SECTION NOTES

1. FOR GENERAL STRUCTURAL NOTES, SEE SHEETS 00-S-002 AND STANDARD SPECIFICATIONS.
2. REINFORCEMENT CLEAR COVER TO BE 3" TYP., UNO
3. ALL LAP SPLICES TO BE CLASS B PER DETAIL 1/00-S-101.

12" 0' 1' 2' 3' 4' 5' 6' 7'
3/8" = 1'-0"

6" 4' 2' 0' 5' 10'
3/16" = 1'-0"

90% SUBMITTAL - NOT FOR CONSTRUCTION

NO.	BY	CHK	APP	DATE	REVISIONS AND RECORD OF USE

REGISTERED PROFESSIONAL ENGINEER
CHARLES R. ASHLEY JR.
S 5258
STRUCTURAL
STATE OF CALIFORNIA

Ashley & Vance ENGINEERING, INC
JOINT VENTURE
BLACK & VEATCH
FILANC

CITY OF MORRO BAY
MORRO BAY WATER
RECLAMATION FACILITY (WRF)

OUTDOOR STORAGE AREA
STRUCTURAL
SECTION

DESIGNED: C. TAYLOR
DETAILED: S. BENJAMIN
CHECKED: I. SHOEBRIDGE
APPROVED: C. ASHLEY
DATE:

0 1/2 1
IF THIS BAR DOES NOT MEASURE 1" THEN DRAWING IS NOT TO FULL SCALE

PROJECT NO.
400530

17-S-301
SHEET
OF

PLOTTED: 3/24/2020 11:52:21 AM
D400530

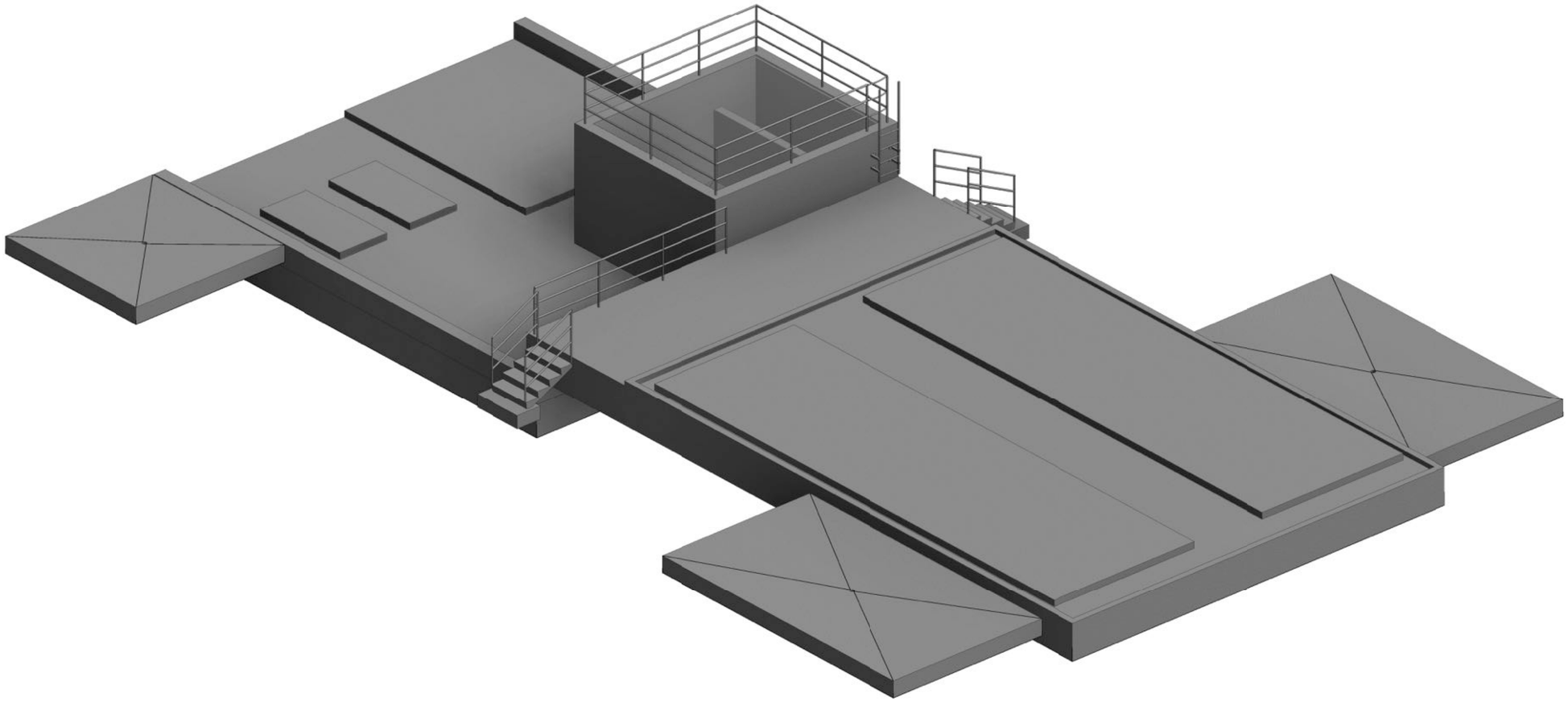

3D VIEW

90% SUBMITTAL - NOT FOR CONSTRUCTION

DATE	REVISIONS AND RECORD OF USE	NO.	BY	CHK	APP

REGISTERED PROFESSIONAL ENGINEER
CHARLES R. ASHLEY JR.
S 5258
STRUCTURAL
STATE OF CALIFORNIA

Ashley & Vance ENGINEERING, INC

JOINT VENTURE

FILANC

BLACK & VEATCH

CITY OF MORRO BAY
FILANC BLACK & VEATCH DB PROPOSAL
RECLAMATION FACILITY (WRF)

HEADWORKS AREA
STRUCTURAL
3D VIEW

DESIGNED: M. MARSH
DETAILED: S. BENJAMIN
CHECKED: I. SHOEBRIDGE
APPROVED: C. ASHLEY
DATE:

0 1/2 1

IF THIS BAR DOES NOT MEASURE 1" THEN DRAWING IS NOT TO FULL SCALE

PROJECT NO.
400530

20-S-001
SHEET
OF

PLOTTED: 3/24/2020 12:33:13 PM
D400530

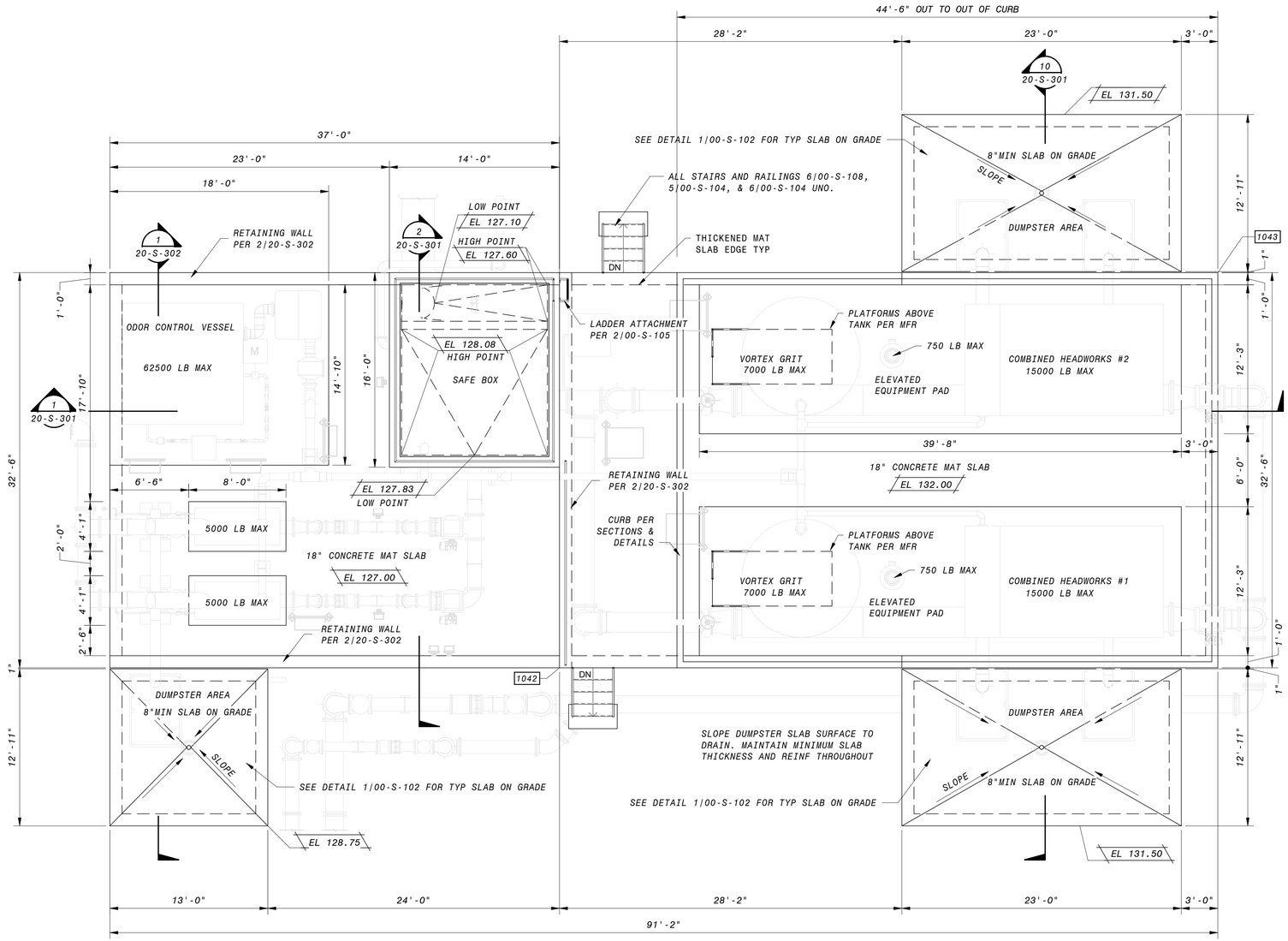

OPERATING FLOOR PLAN

3/16" = 1'-0"

GENERAL NOTES

1. PLEASE SEE SOILS REPORT FOR ADDITIONAL SPECIFICATIONS AND RECOMMENDATIONS. IT IS THE DESIGN-BUILDER'S RESPONSIBILITY TO OBTAIN A COPY OF THE SOILS REPORT FROM THE OWNER OR OWNERS REPRESENTATIVE.
2. NOT USED
3. FOR GENERAL STRUCTURAL NOTES, SEE SHEETS 00-S-002 AND STANDARD SPECIFICATIONS.
4. VERIFY ALL DIMENSIONS PRIOR TO COMMENCEMENT OF CONSTRUCTION.
5. SEE DETAIL 2/00-S-102 FOR TYP MAT SLAB ON GRADE.
6. ALL LAP SPLICES TO BE CLASS B PER DETAIL 1/00-S-101
7. SUBMIT EQUIPMENT WEIGHT FOR REVIEW PRIOR TO INSTALLATION. SEE DETAIL 1/00-S-105 FOR TYPICAL INTERIOR EQUIPMENT PADS AND DETAIL 10/00-S-105 FOR TYPICAL EXTERIOR EQUIPMENT PADS. LOCATION AND SIZE OF EQUIPMENT PADS TO BE COORDINATED WITH MECHANICAL/ELECTRICAL/PLUMBING DRAWINGS. EQUIPMENT ANCHORAGE PER PROJECT SPECIFICATIONS.
8. REFER TO MECHANICAL/ELECTRICAL/PLUMBING DRAWINGS FOR SIZE AND LOCATIONS OF PIPE PENETRATIONS AND WALL OPENINGS. SEE DETAIL 9/00-S-101 FOR TYPICAL REINFORCEMENT REQUIREMENTS. COORDINATE PIPE PENETRATION SEAL WITH MECHANICAL ENGINEER OF RECORD.
9. FOR TYPICAL MAT SLAB EDGE, REFER TO DETAIL 13/00-S-102.

NO.	BY	CHK	APP	DATE	REVISIONS AND RECORD OF USE

REGISTERED PROFESSIONAL ENGINEER
CHARLES R. ASHLEY JR.
S 5258
STRUCTURAL
STATE OF CALIFORNIA

Ashley & Vance ENGINEERING, INC
JOINT VENTURE
BLACK & VEATCH
FILANC

CITY OF MORRO BAY
FILANC BLACK & VEATCH DB PROPOSAL
RECLAMATION FACILITY (WRF)

HEADWORKS AREA
STRUCTURAL
PLAN

DESIGNED: M. MARSH
DETAILED: S. BENJAMIN
CHECKED: I. SHOEBRIDGE
APPROVED: C. ASHLEY
DATE:

6" 4' 2' 0' 5' 10'
3/16" = 1'-0"

0 1/2 1
IF THIS BAR DOES NOT MEASURE 1" THEN DRAWING IS NOT TO FULL SCALE

PROJECT NO.
400530

20-S-101
SHEET
OF

90% SUBMITTAL - NOT FOR CONSTRUCTION

PLOTTED: 3/24/2020 12:33:14 PM
D400530

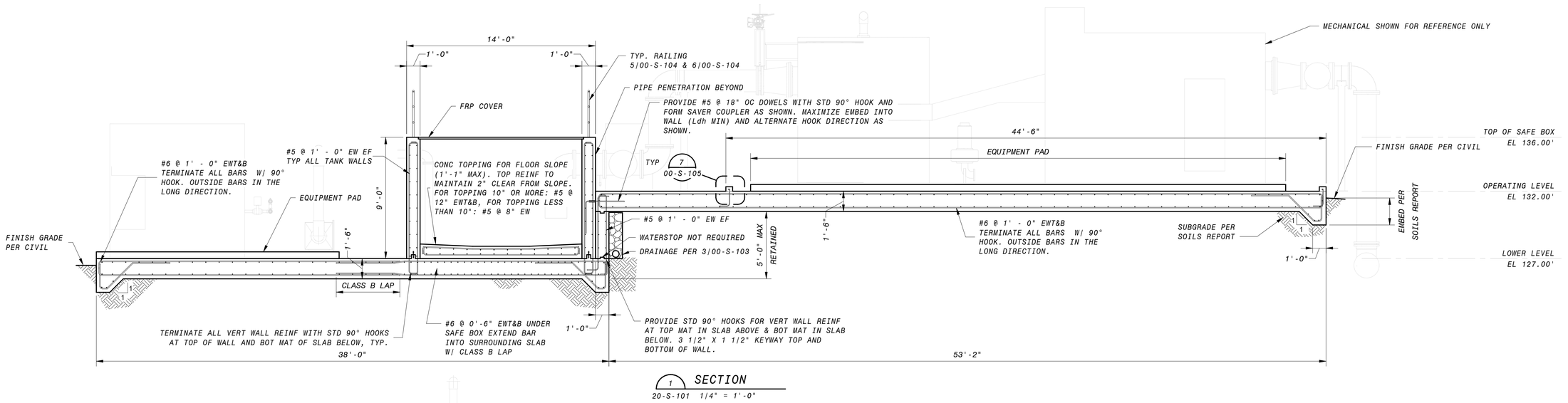

1 SECTION
20-S-101 1/4" = 1'-0"

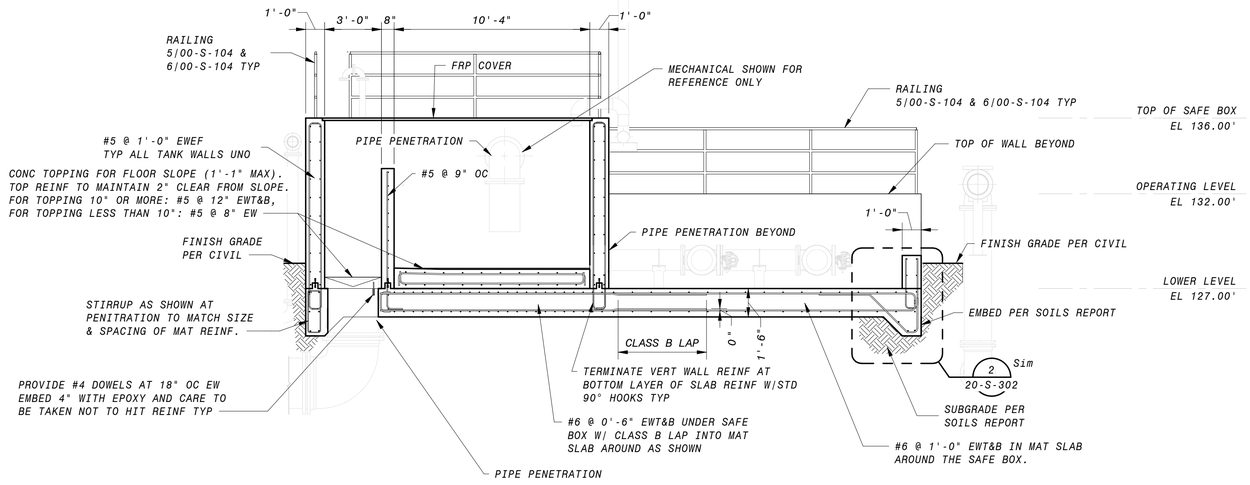

2 SECTION
20-S-101 1/4" = 1'-0"

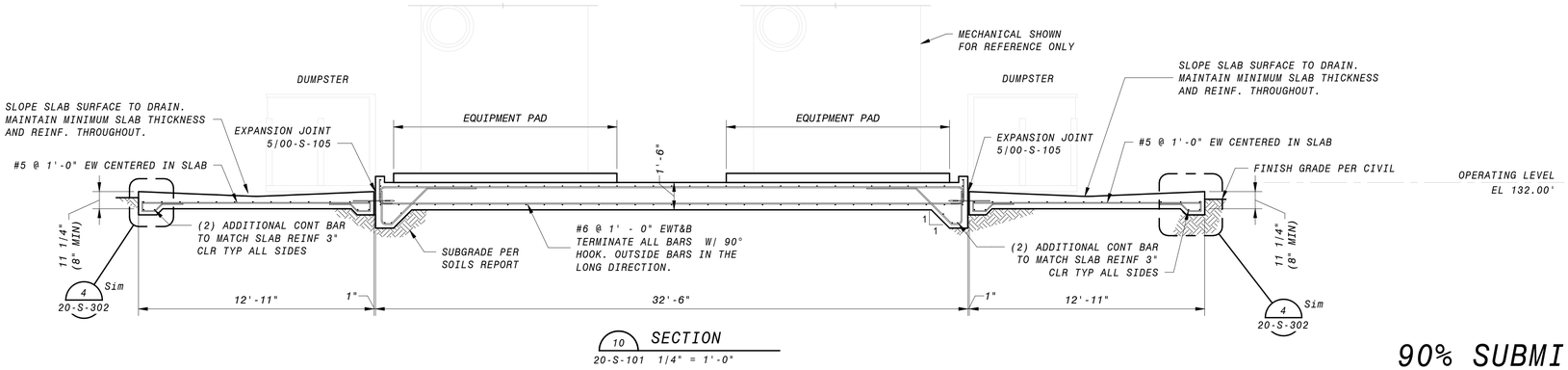

10 SECTION
20-S-101 1/4" = 1'-0"

GENERAL SECTION NOTES

1. FOR GENERAL STRUCTURAL NOTES, SEE SHEETS 00-S-002 AND STANDARD SPECIFICATIONS.
2. AT WALLS 12" THICK OR LESS, PROVIDE A 6" WATERSTOP, UNO. AT WALLS GREATER THAN 12" THICK, PROVIDE A 9" WATERSTOP, UNO. REFER TO DETAIL 2 ON SHEET 00-S-103.
3. REINFORCEMENT CLEAR COVER TO BE 2" EF FOR WALLS, 2" AT TOP OF SLABS, AND 3" AT BOTTOM OF SLABS, TYP., UNO
4. FURNISH FRP ODOR CONTROL COVER DESIGNED FOR OUTDOOR INSTALLATION IN A COASTAL ENVIRONMENT. COVER SHALL BE DESIGNED WITH REMOVABLE PANELS TO BASIN ACCESS, WITH PANELS WEIGHING NO MORE THAN 100 LBS EACH. HANDLES AND PICK POINTS SHALL BE INCLUDED AS REQUIRED. PANELS SHALL BE DESIGNED FOR TWO OPERATORS TO BE STANDING ON THE COVER REMOVING A PANEL, 60 PSF UNIFORM DISTRIBUTED LIVE LOAD, AND LESSER OF L/120 OR 3/8" DEFLECTION. COLOR SHALL BE SELECTED IN SUBMITTAL REVIEW FROM MANUFACTURER STANDARD COLOR SELECTIONS.
5. ALL LAP SPLICES TO BE CLASS B PER DETAIL 1/00-S-101.
6. REFER TO MECHANICAL DRAWINGS FOR SIZE AND LOCATIONS OF PIPE PENETRATIONS AND WALL OPENINGS. SEE DETAIL 9/00-S-101 FOR TYPICAL REINFORCEMENT REQUIREMENTS. COORDINATE PIPE PENETRATION SEAL WITH EOR (WHERE OCCURS).
7. COORDINATE EQUIPMENT WEIGHT WITH EOR PRIOR TO INSTALLATION. SEE DETAIL 1/00-S-105 FOR TYPICAL EQUIPMENT ANCHORAGE AND EQUIPMENT PADS.
8. FOR TYPICAL MAT SLAB EDGE, REFER TO DETAIL 13/00-S-102

4' 2' 0' 4' 8'
1/4" = 1'-0"

90% SUBMITTAL - NOT FOR CONSTRUCTION

NO.	BY	CHK	APP	DATE	REVISIONS AND RECORD OF USE

REGISTERED PROFESSIONAL ENGINEER
CHARLES R. ASHLEY JR.
S 5258
STRUCTURAL
STATE OF CALIFORNIA

Ashley&Vance ENGINEERING, INC
JOINT VENTURE
BLACK&VEATCH
FILANC

CITY OF MORRO BAY
FILANC BLACK & VEATCH DB PROPOSAL
RECLAMATION FACILITY (WRF)

HEADWORKS AREA
STRUCTURAL
SECTIONS

DESIGNED: M. MARSH
DETAILED: S. BENJAMIN
CHECKED: I. SHOEBRIDGE
APPROVED: C. ASHLEY
DATE:

0 1/2 1
IF THIS BAR DOES NOT MEASURE 1" THEN DRAWING IS NOT TO FULL SCALE

PROJECT NO.
400530

20-S-301
SHEET
OF

PLOTTED: 3/24/2020 12:33:15 PM
0400530

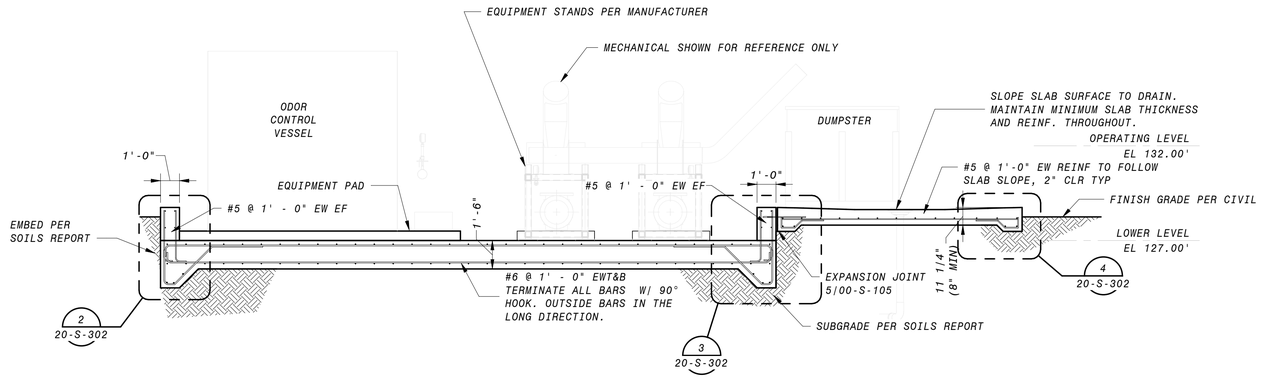

1 SECTION
20-S-101 1/4" = 1'-0"

GENERAL SECTION NOTES

1. FOR GENERAL STRUCTURAL NOTES, SEE SHEETS 00-S-002 AND STANDARD SPECIFICATIONS.
2. AT WALLS 12" THICK OR LESS, PROVIDE A 6" WATERSTOP, UNO. AT WALLS GREATER THAN 12" THICK, PROVIDE A 9" WATERSTOP, UNO. REFER TO DETAIL 2 ON SHEET 00-S-103.
3. REINFORCEMENT CLEAR COVER TO BE 2" EF FOR WALLS, 2" AT TOP OF SLABS, AND 3" AT BOTTOM OF SLABS, TYP., UNO
4. ALL LAP SPLICES TO BE CLASS B PER DETAIL 1/00-S-101.
5. REFER TO MECHANICAL DRAWINGS FOR SIZE AND LOCATIONS OF PIPE PENETRATIONS AND WALL OPENINGS. SEE DETAIL 9/00-S-101 FOR TYPICAL REINFORCEMENT REQUIREMENTS. COORDINATE PIPE PENETRATION SEAL WITH EOR (WHERE OCCURS).
6. COORDINATE EQUIPMENT WEIGHT WITH EOR PRIOR TO INSTALLATION. SEE DETAIL 1/00-S-105 FOR TYPICAL EQUIPMENT ANCHORAGE AND EQUIPMENT PADS.
7. FOR TYPICAL MAT SLAB EDGE, REFER TO DETAIL 13/00-S-102

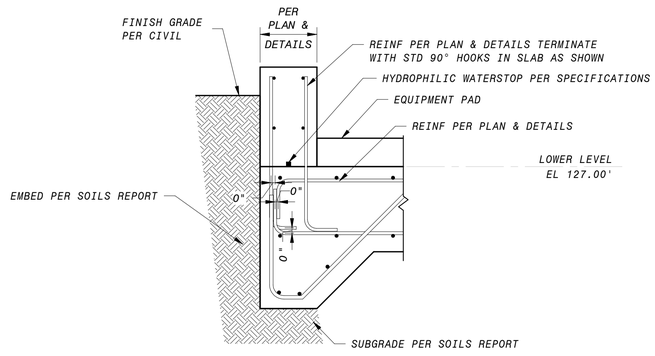

2 RETAINING WALL AT SLAB EDGE - A
20-S-301 3/4" = 1'-0"

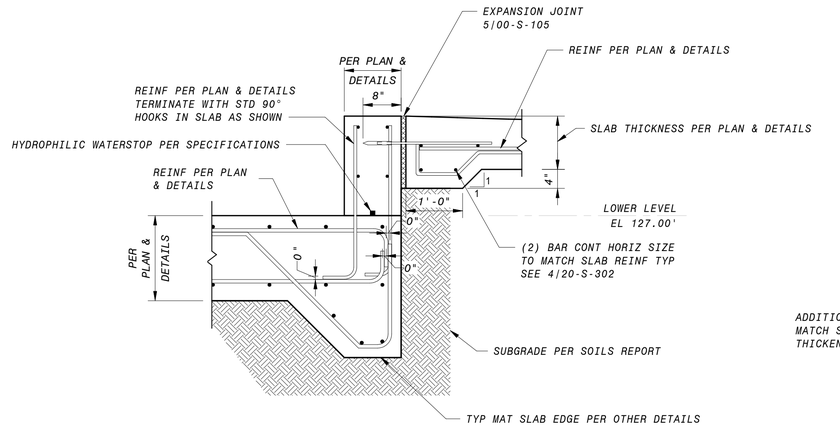

3 RETAINING WALL AT SLAB EDGE - B
20-S-302 3/4" = 1'-0"

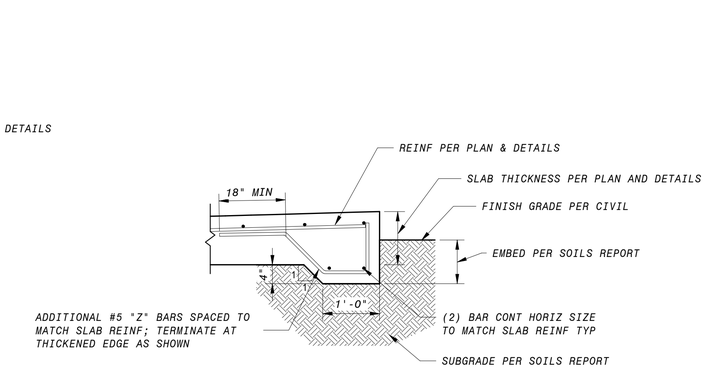

4 TYPICAL DUMPSTER SLAB EDGE
20-S-301 3/4" = 1'-0"

12" 6" 0' 1' 2' 3'
3/4" = 1'-0"

4' 2' 0' 4' 8'
1/4" = 1'-0"

90% SUBMITTAL - NOT FOR CONSTRUCTION

NO.	BY	CHK	APP	DATE	REVISIONS AND RECORD OF USE

REGISTERED PROFESSIONAL ENGINEER
CHARLES R. ASHLEY JR.
S 5258
STRUCTURAL
STATE OF CALIFORNIA

Ashley & Vance ENGINEERING, INC
BLACK & VEATCH
JOINT VENTURE
FILANC

CITY OF MORRO BAY
FILANC BLACK & VEATCH DB PROPOSAL
RECLAMATION FACILITY (WRF)

HEADWORKS AREA
STRUCTURAL
SECTIONS & DETAILS

DESIGNED: M. MARSH
DETAILED: S. BENJAMIN
CHECKED: I. SHOEBRIDGE
APPROVED: C. ASHLEY
DATE:

0 1/2 1
IF THIS BAR DOES NOT MEASURE 1" THEN DRAWING IS NOT TO FULL SCALE

PROJECT NO.
400530

20-S-302
SHEET
OF

PLOTTED: 3/24/2020 12:33:15 PM
D400530

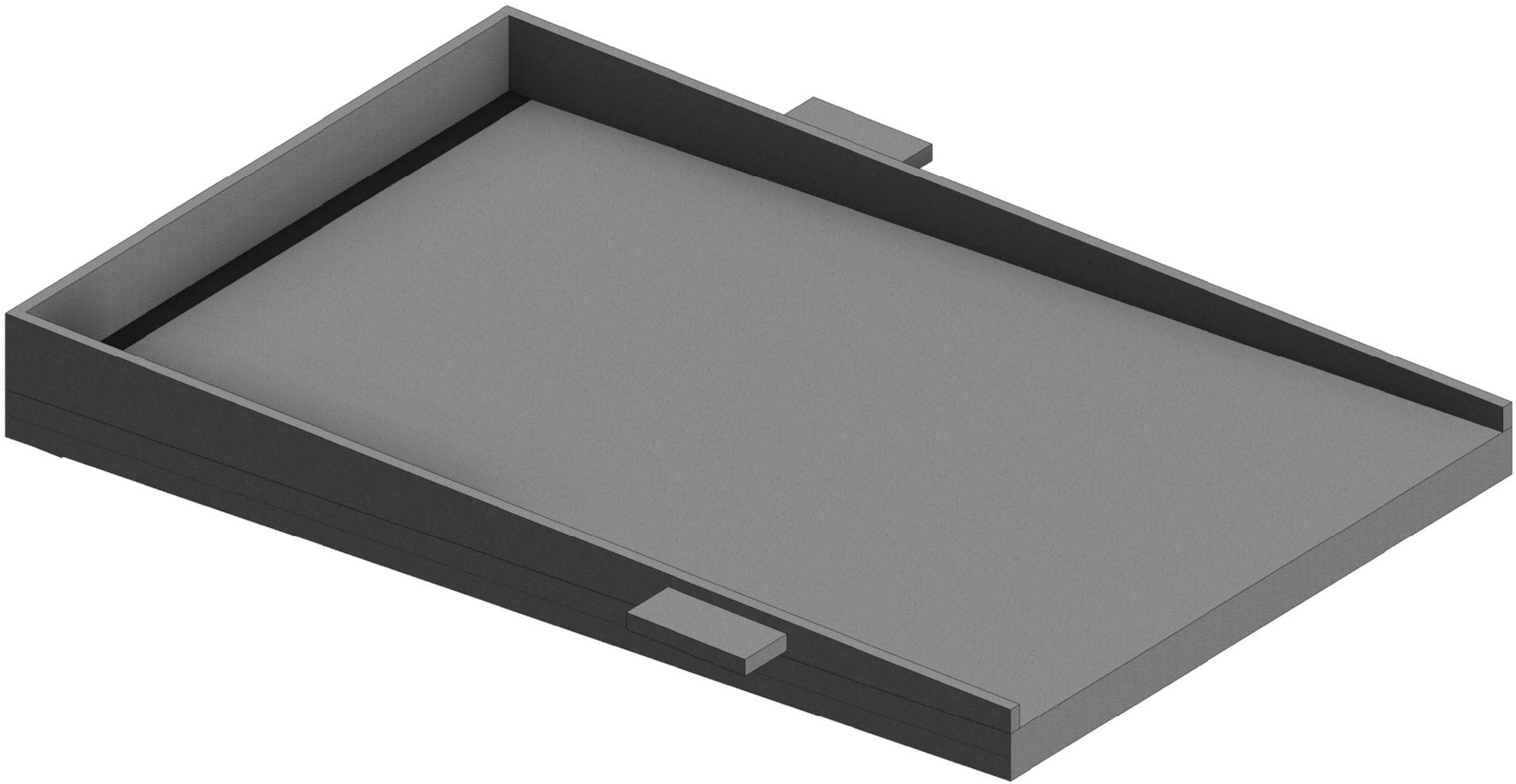

3D VIEW - EAST

90% SUBMITTAL - NOT FOR CONSTRUCTION

DATE	REVISIONS AND RECORD OF USE	NO.	BY	CHK	APP

REGISTERED PROFESSIONAL ENGINEER
CHARLES R. ASHLEY JR.
S 5258
STRUCTURAL
STATE OF CALIFORNIA

Ashley & Vance ENGINEERING, INC

JOINT VENTURE

BLACK & VEATCH

FILANC

CITY OF MORRO BAY
FILANC BLACK & VEATCH DB PROPOSAL
RECLAMATION FACILITY (WRF)

VACTOR WASHDOWN AREA
STRUCTURAL
3D VIEW

DESIGNED: M. MARSH
DETAILED: S. BENJAMIN
CHECKED: I. SHOEBRIDGE
APPROVED: C. ASHLEY
DATE:

0 1/2 1
IF THIS BAR DOES NOT MEASURE 1" THEN DRAWING IS NOT TO FULL SCALE

PROJECT NO.
400530

24-S-001
SHEET
OF

PLOTTED: 3/24/2020 12:35:44 PM
D400530

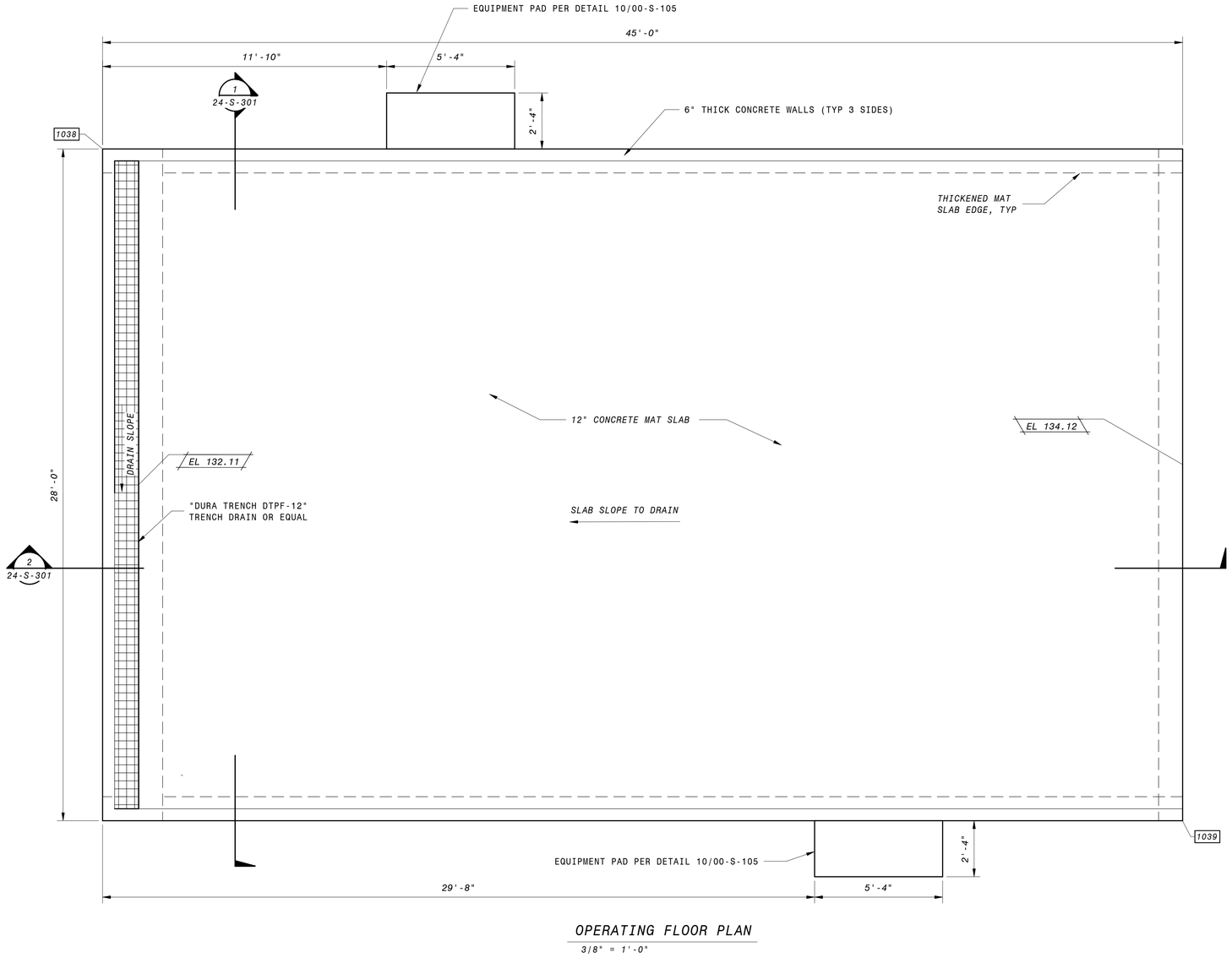

OPERATING FLOOR PLAN

3/8" = 1'-0"

GENERAL FOUNDATION NOTES

1. PLEASE SEE SOILS REPORT FOR ADDITIONAL SPECIFICATIONS AND RECOMMENDATIONS. IT IS THE DESIGN BUILDER'S RESPONSIBILITY TO OBTAIN A COPY OF THE SOILS REPORT FROM THE OWNER OR OWNERS REPRESENTATIVE.
2. NOT USED
3. FOR GENERAL STRUCTURAL NOTES, SEE SHEETS 00-S-002 AND STANDARD SPECIFICATIONS.
4. VERIFY ALL DIMENSIONS PRIOR TO COMMENCEMENT OF CONSTRUCTION.
5. OUTSIDE LAYER OF MAT SLAB REINFORCEMENT TO BE PLACED IN THE SHORT DIRECTION. INSIDE LAYER OF MAT SLAB REINFORCEMENT TO BE PLACED IN THE LONG DIRECTION. TYPICAL, UNLESS NOTED OTHERWISE.
6. ALL LAP SPLICES TO BE CLASS B PER DETAIL 1/00-S-101
7. ALL SLAB REINFORCEMENT MUST TERMINATE WITH A STANDARD 90° HOOK PER DETAIL 5/00-S-101.
8. FOR TYPICAL MAT SLAB EDGE, REFER TO DETAIL 13/00-S-102.
9. REFER TO MECHANICAL/ ELECTRICAL/ PLUMBING DRAWINGS FOR SIZE AND LOCATIONS OF PIPE PENETRATIONS AND WALL OPENINGS. SEE DETAIL 9/00-S-101 FOR TYPICAL REINFORCEMENT REQUIREMENTS. COORDINATE PIPE PENETRATION SEAL WITH MECHANICAL ENGINEER OF RECORD.
10. SEE DETAIL 2/00-S-102 FOR TYP MAT SLAB ON GRADE.
11. COVER SHALL BE 12" WIDE GALVANIZED IRON SLOTTED GRATE WITH 1.125" SLOT WIDTH, MODEL 12B24DG OR EQUAL.

12" 0' 1' 2' 3' 4' 5' 6' 7'

3/8" = 1'-0"

90% SUBMITTAL - NOT FOR CONSTRUCTION

NO.	BY	CHK	APP	DATE	REVISIONS AND RECORD OF USE

REGISTERED PROFESSIONAL ENGINEER
CHARLES R. ASHLEY JR.
S 5258
STRUCTURAL
STATE OF CALIFORNIA

Ashley & Vance ENGINEERING, INC

JOINT VENTURE

BLACK & VEATCH

FILANC

CITY OF MORRO BAY
FILANC BLACK & VEATCH DB PROPOSAL
RECLAMATION FACILITY (WRF)

VACTOR WASHDOWN AREA
STRUCTURAL
PLAN

DESIGNED: M. MARSH
DETAILED: S. BENJAMIN
CHECKED: I. SHOEBRIDGE
APPROVED: C. ASHLEY
DATE:

0 1/2 1
IF THIS BAR DOES NOT MEASURE 1" THEN DRAWING IS NOT TO FULL SCALE

PROJECT NO.
400530

24-S-101
SHEET
OF

PLOTTED: 3/24/2020 12:35:44 PM
D400530

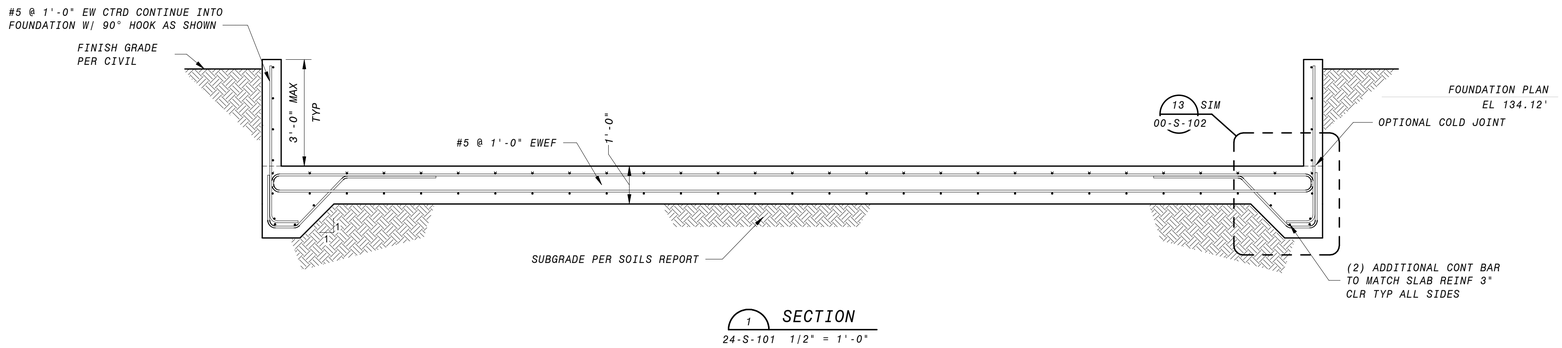

1 SECTION
24-S-101 1/2" = 1'-0"

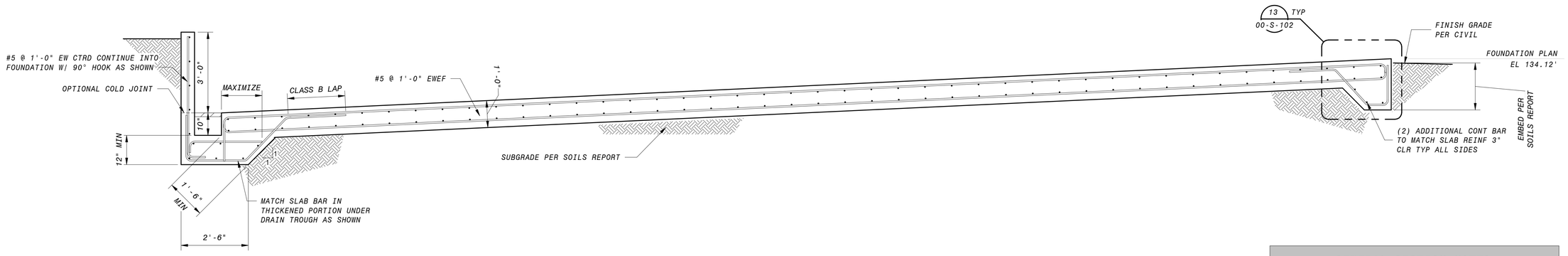

2 SECTION
24-S-101 1/2" = 1'-0"

GENERAL SECTION NOTES

1. FOR GENERAL STRUCTURAL NOTES, SEE SHEETS 00-S-002 AND STANDARD SPECIFICATIONS.
2. REINFORCEMENT CLEAR COVER TO BE 2" EF FOR WALLS, 2" AT TOP OF SLABS, AND 3" AT BOTTOM OF SLABS, TYP., UNO
3. ALL LAP SPLICES TO BE CLASS B PER DETAIL 1/00-S-101.
4. ALL SLAB REINFORCEMENT MUST TERMINATE WITH A STANDARD 90° HOOK PER DETAIL 05|00-S-101.

12' 6' 0' 1' 2' 3' 4' 5'
1/2" = 1'-0"

90% SUBMITTAL - NOT FOR CONSTRUCTION

NO.	BY	CHK	APP	DATE	REVISIONS AND RECORD OF USE

REGISTERED PROFESSIONAL ENGINEER
CHARLES R. ASHLEY JR.
S 5258
STRUCTURAL
STATE OF CALIFORNIA

Ashley & Vance ENGINEERING, INC
JOINT VENTURE
BLACK & VEATCH
FILANC

CITY OF MORRO BAY
FILANC BLACK & VEATCH DB PROPOSAL
RECLAMATION FACILITY (WRF)

VACTOR WASHDOWN AREA
STRUCTURAL
SECTIONS

DESIGNED: M. MARSH
DETAILED: S. BENJAMIN
CHECKED: I. SHOEBRIDGE
APPROVED: C. ASHLEY
DATE:

0 1/2 1
IF THIS BAR DOES NOT MEASURE 1" THEN DRAWING IS NOT TO FULL SCALE

PROJECT NO.
400530

24-S-301
SHEET
OF

PLOTTED: 3/24/2020 12:35:46 PM
D400530

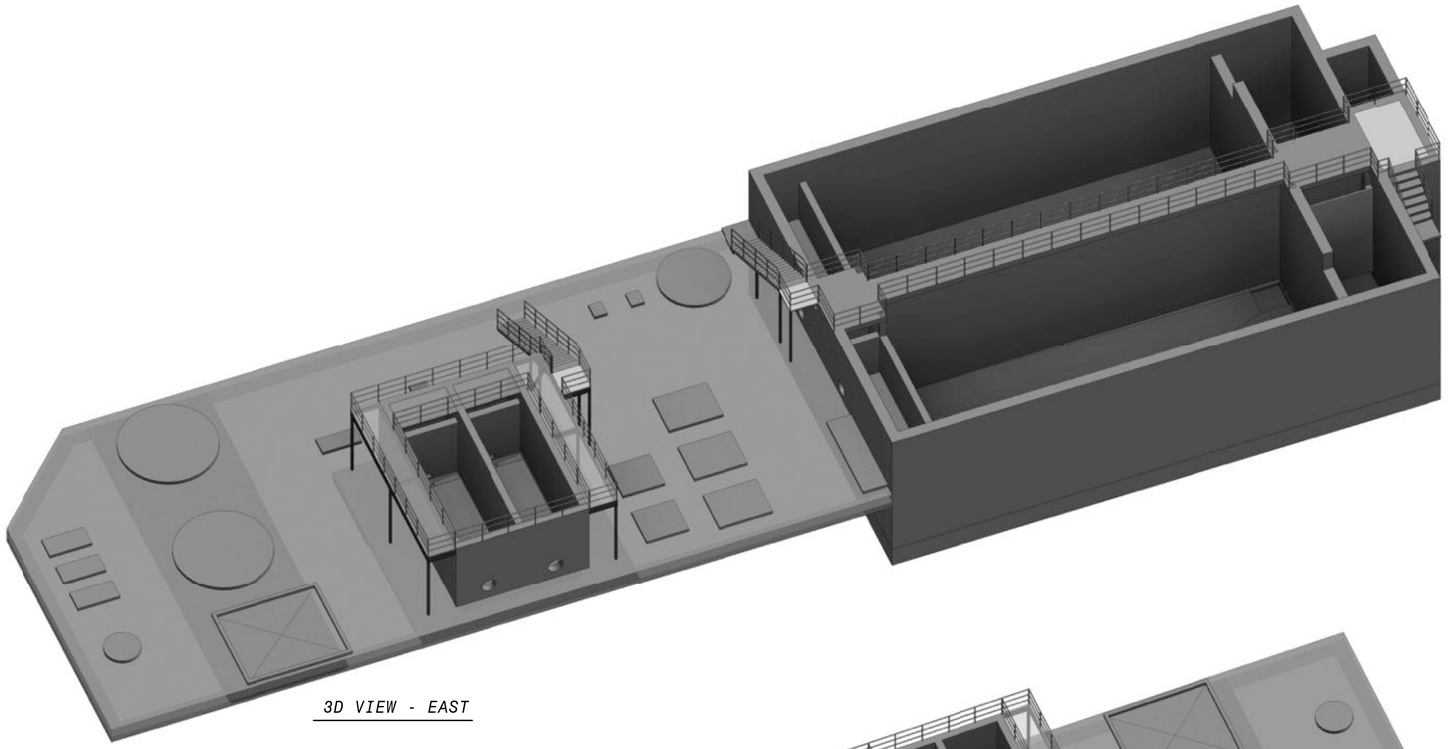

3D VIEW - EAST

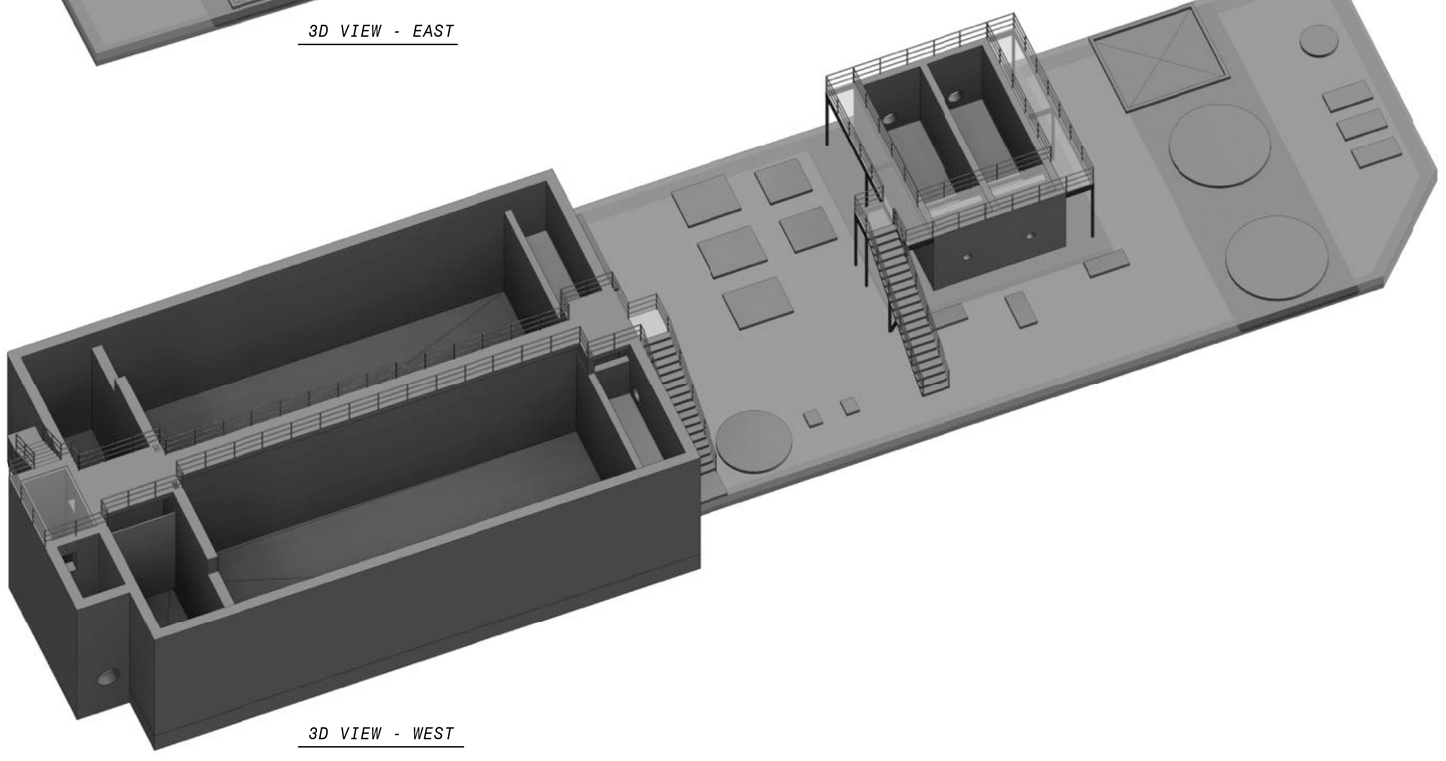

3D VIEW - WEST

90% SUBMITTAL- NOT FOR CONSTRUCTION

NO.	BY	CHK	APP	DATE	REVISIONS AND RECORD OF USE

REGISTERED PROFESSIONAL ENGINEER
CHARLES R. ASHLEY JR.
S 5258
STRUCTURAL
STATE OF CALIFORNIA

Ashley & Vance ENGINEERING, INC

JOINT VENTURE

BLACK & VEATCH

FILANC

CITY OF MORRO BAY
MORRO BAY WATER
RECLAMATION FACILITY (WRF)

TREATMENT AREA-OVERALL
STRUCTURAL
3D VIEWS

DESIGNED: M. MARSH
DETAILED: S. BENJAMIN
CHECKED: I. SHOEBRIDGE
APPROVED: C. ASHLEY
DATE:

0 1/2 1
IF THIS BAR DOES NOT MEASURE 1" THEN DRAWING IS NOT TO FULL SCALE

PROJECT NO.
400530

30-S-001
SHEET
OF

PLOTTED: 3/24/2020 12:48:02 PM
0400530

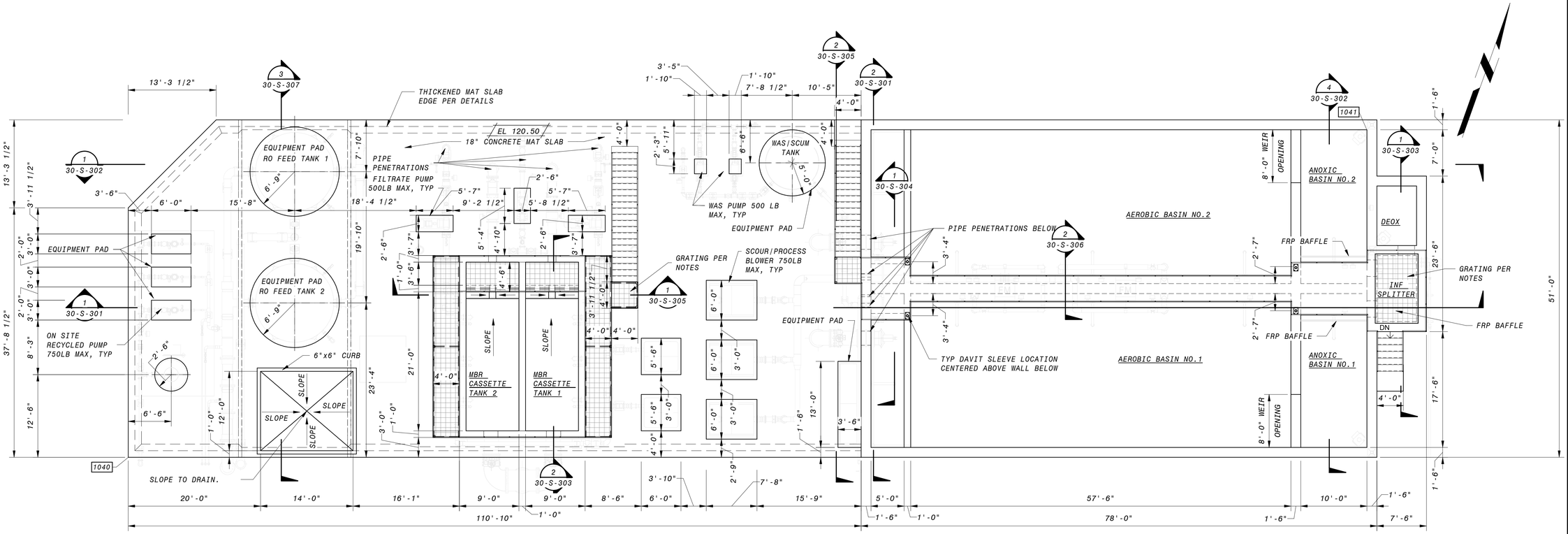

OPERATING FLOOR PLAN

1/8" = 1'-0"

GENERAL NOTES

1. PLEASE SEE SOILS REPORT FOR ADDITIONAL SPECIFICATIONS AND RECOMMENDATIONS. IT IS THE DESIGN BUILDER'S RESPONSIBILITY TO OBTAIN A COPY OF THE SOILS REPORT FROM THE OWNER OR OWNERS REPRESENTATIVE.
2. NOT USED
3. SEE GENERAL NOTES & SPECIFICATIONS FOR ADDITIONAL REQUIREMENTS AND MATERIAL SPECIFICATIONS.
4. DESIGN BUILDER TO VERIFY ALL DIMENSIONS PRIOR TO COMMENCEMENT OF CONSTRUCTION.
5. ALL REINFORCEMENT LAP SPLICES TO BE CLASS B PER DETAIL 1/00-S-101
6. IF SPLICES RESULT IN CLEAR SPACING LESS THAN ACI CODE MINIMUMS, PROVIDE TYPE 2 MECHANICAL SPLICES. MECHANICAL CONNECTORS SHALL BE SUBMITTED FOR REVIEW AND APPROVAL.
7. ALL SLAB REINFORCEMENT MUST TERMINATE WITH A STANDARD 90° HOOK.
8. FURNISH FRP OR GALVANIZED STEEL GRATING DESIGNED FOR OUTDOOR INSTALLATION IN A COASTAL ENVIRONMENT. GRATING SHALL BE DESIGNED FOR 100 PSF UNIFORM DISTRIBUTED LIVE LOAD, 300 LB CONCENTRATED LIVE LOAD, AND LESSER OF L/200 OR 1/4" DEFLECTION. COLOR SHALL BE SELECTED IN SUBMITTAL REVIEW FROM MANUFACTURER STANDARD COLOR SELECTIONS.
9. SUBMIT EQUIPMENT WEIGHT FOR REVIEW PRIOR TO INSTALLATION. SEE DETAIL 1/00-S-105 FOR TYPICAL EQUIPMENT PADS. LOCATION & SIZE OF EQUIPMENT PADS TO BE COORDINATED WITH MECHANICAL/ELECTRICAL/PLUMBING DRAWINGS. EQUIPMENT ANCHORAGE PER PROJECT SPECIFICATIONS.
10. REFER TO MECHANICAL/ ELECTRICAL/ PLUMBING DRAWINGS FOR SIZE AND LOCATIONS OF PIPE PENETRATIONS AND WALL OPENINGS. SEE DETAIL 9/00-S-101 FOR TYPICAL REINFORCEMENT REQUIREMENTS. COORDINATE PIPE PENETRATION SEAL WITH MECHANICAL ENGINEER OF RECORD.
11. FOR TYPICAL MAT SLAB EDGE, REFER TO DETAIL 13/00-S-102.
12. PROVIDE COMPLETE DESIGN PACKAGE FOR FRP BAFFLES (INCLUDING ANCHORAGE) SIGNED BY A REGISTERED PROFESSIONAL ENGINEER FOR REVIEW. CARE TO BE TAKEN TO NOT HIT REINFORCEMENT.
13. PROVIDE COMPLETE DESIGN PACKAGE FOR DAVIT AND MIXERS (INCLUDE ANCHORAGE) SIGNED BY A REGISTERED PROFESSIONAL ENGINEER FOR REVIEW. CARE TO BE TAKEN TO NOT HIT REINFORCEMENT.

8' 4' 0' 8' 16'

1/8" = 1'-0"

90% SUBMITTAL- NOT FOR CONSTRUCTION

NO.	BY	CHK	APP	DATE	REVISIONS AND RECORD OF USE

REGISTERED PROFESSIONAL ENGINEER
CHARLES R. ASHLEY JR.
S 5258
STRUCTURAL
STATE OF CALIFORNIA

Ashley & Vance ENGINEERING, INC
JOINT VENTURE
BLACK & VEATCH
FILANC

CITY OF MORRO BAY
MORRO BAY WATER
RECLAMATION FACILITY (WRF)

TREATMENT AREA
STRUCTURAL
OPERATING LEVEL PLAN

DESIGNED: M. MARSH
DETAILED: S. BENJAMIN
CHECKED: I. SHOEBRIDGE
APPROVED: C. ASHLEY
DATE:

0 1/2 1
IF THIS BAR DOES NOT MEASURE 1" THEN DRAWING IS NOT TO FULL SCALE

PROJECT NO.
400530

30-S-101
SHEET
OF

PLOTTED: 3/24/2020 12:48:04 PM
D400530

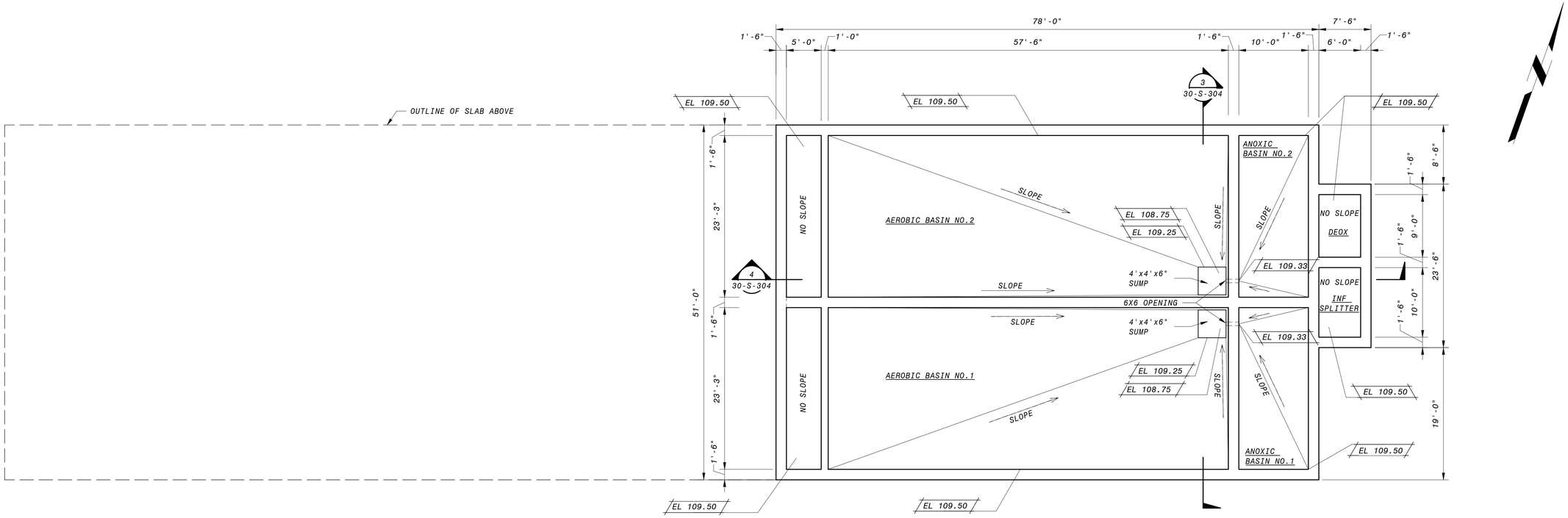

LOWER PLAN

1/8" = 1'-0"

GENERAL NOTES

1. PLEASE SEE SOILS REPORT FOR ADDITIONAL SPECIFICATIONS AND RECOMMENDATIONS. IT IS THE DESIGN BUILDER'S RESPONSIBILITY TO OBTAIN A COPY OF THE SOILS REPORT FROM THE OWNER OR OWNERS REPRESENTATIVE.
2. NOT USED.
3. SEE GENERAL NOTES & SPECIFICATIONS FOR ADDITIONAL REQUIREMENTS AND MATERIAL SPECIFICATIONS.
4. DESIGN BUILDER TO VERIFY ALL DIMENSIONS PRIOR TO COMMENCEMENT OF CONSTRUCTION.
5. ALL REINFORCEMENT LAP SPLICES TO BE CLASS B PER DETAIL 1/00-S-101
6. IF SPLICES RESULT IN CLEAR SPACING LESS THAN ACI CODE MINIMUMS, PROVIDE TYPE 2 MECHANICAL SPLICES. MECHANICAL CONNECTORS SHALL BE SUBMITTED TO EOR FOR REVIEW AND APPROVAL.
7. ALL SLAB REINFORCEMENT MUST TERMINATE WITH A STANDARD 90° HOOK.
8. REFER TO MECHANICAL/ ELECTRICAL/ PLUMBING DRAWINGS FOR SIZE AND LOCATIONS OF PIPE PENETRATIONS AND WALL OPENINGS. SEE DETAIL 9/00-S-101 FOR TYPICAL REINFORCEMENT REQUIREMENTS. COORDINATE PIPE PENETRATION SEAL WITH MECHANICAL ENGINEER OF RECORD.

8' 4' 0' 8' 16'

1/8" = 1'-0"

90% SUBMITTAL- NOT FOR CONSTRUCTION

NO.	BY	CHK	APP	DATE	REVISIONS AND RECORD OF USE

REGISTERED PROFESSIONAL ENGINEER CHARLES R. ASHLEY JR. S 5258 STRUCTURAL STATE OF CALIFORNIA

Ashley & Vance ENGINEERING, INC

JOINT VENTURE

BLACK & VEATCH

FILANC

CITY OF MORRO BAY
MORRO BAY WATER
RECLAMATION FACILITY (WRF)

TREATMENT AREA
STRUCTURAL
LOWER PLAN

DESIGNED: M. MARSH
DETAILED: S. BENJAMIN
CHECKED: I. SHOEBRIDGE
APPROVED: C. ASHLEY
DATE:

0 1/2 1

IF THIS BAR DOES NOT MEASURE 1" THEN DRAWING IS NOT TO FULL SCALE

PROJECT NO.
400530

30-S-102
SHEET
OF

PLOTTED: 3/24/2020 12:48:04 PM
D400530

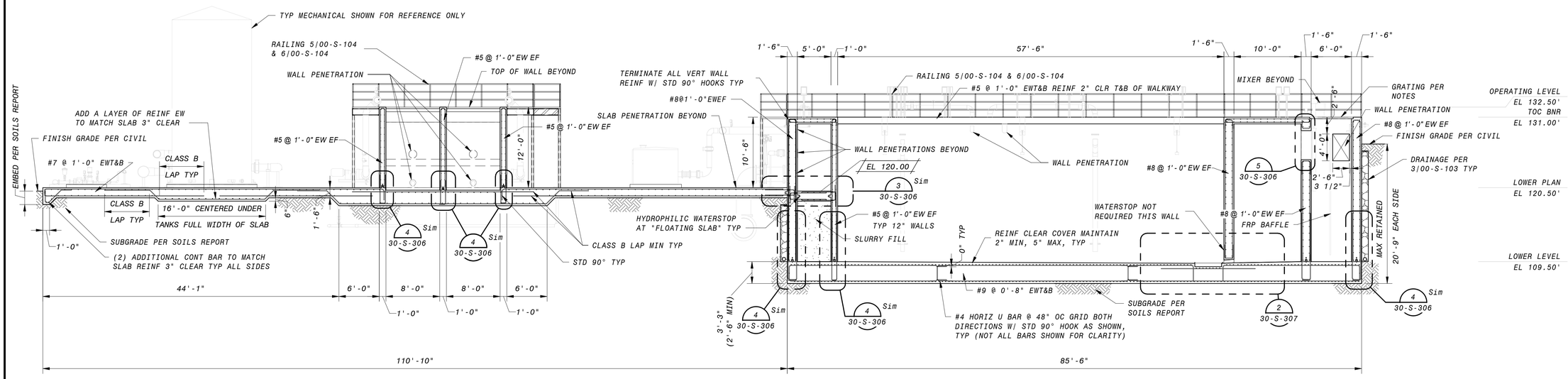

1 SECTION
30-S-101 1/8" = 1'-0"

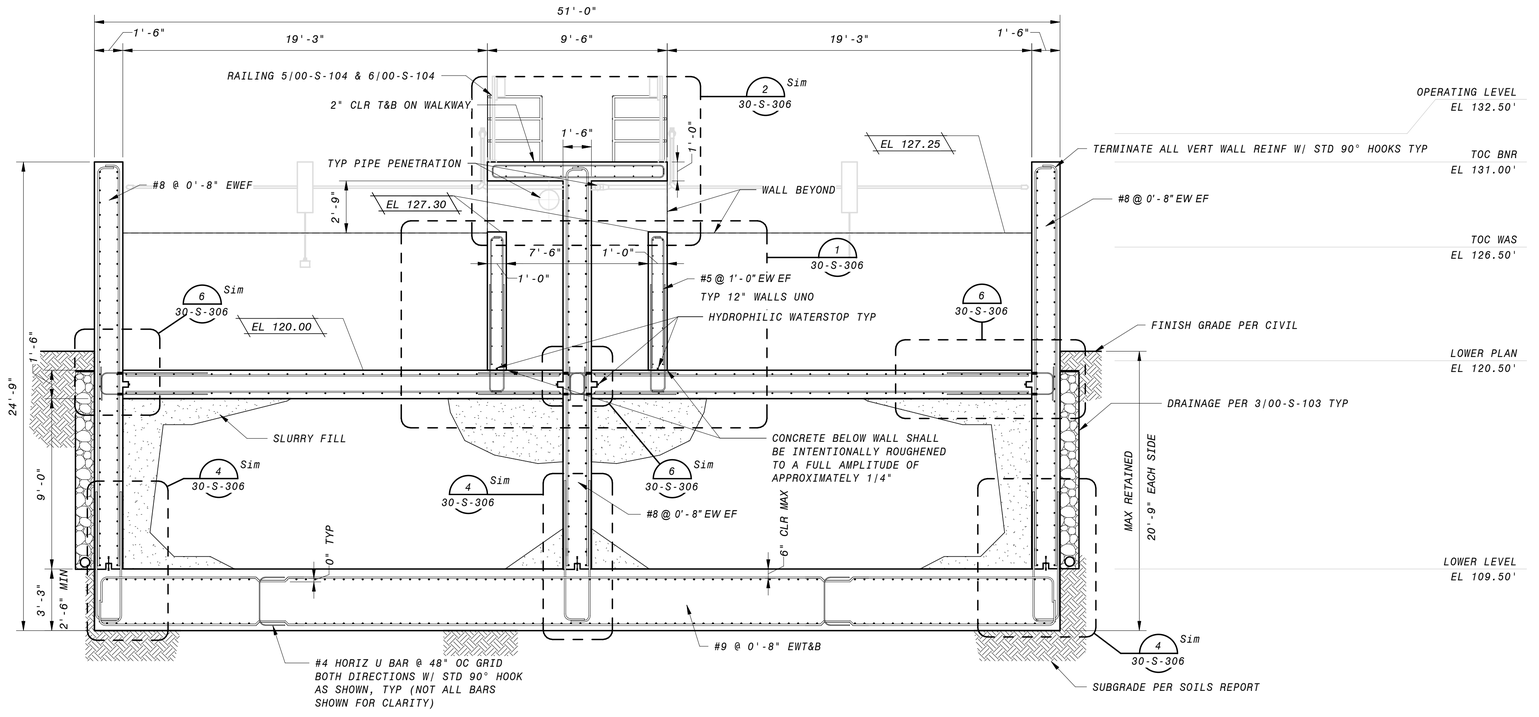

2 SECTION
30-S-101 1/4" = 1'-0"

GENERAL SECTION NOTES

1. FOR GENERAL STRUCTURAL NOTES, SEE SHEET 00-S-002 AND STANDARD SPECIFICATIONS.
2. AT WALLS 12" THICK OR LESS, PROVIDE A 6" WATERSTOP, UNO. AT WALLS GREATER THAN 12" THICK, PROVIDE A 9" WATERSTOP, UNO. REFER TO DETAIL 2 ON SHEET 00-S-103.
3. REINFORCEMENT CLEAR COVER TO BE 2" EF FOR WALLS, 2" AT TOP OF SLABS, AND 3" AT BOTTOM OF SLABS, TYP., UNO
4. FURNISH FRP OR GALVANIZED GRATING COVER DESIGNED FOR OUTDOOR INSTALLATION IN COASTAL ENVIRONMENT. 100 PSF UNIFORM DISTRIBUTED LIVE LOAD, 300 LB CONCENTRATED LIVE LOAD, AND LESSER OF L/200 OR 1/4" DEFLECTION. COLOR SHALL BE SELECTED IN SUBMITTAL REVIEW FROM MANUFACTURER STANDARD COLOR SELECTIONS.
5. ALL LAP SPLICES TO BE CLASS B PER DETAIL 1/00-S-101.
6. REFER TO MECHANICAL DRAWINGS FOR SIZE AND LOCATIONS OF PIPE PENETRATIONS AND WALL OPENINGS. SEE DETAIL 9/00-S-101 FOR TYPICAL REINFORCEMENT REQUIREMENTS. COORDINATE PIPE PENETRATION SEAL WITH MECHANICAL EOR (WHERE OCCURS).
7. PROVIDE GATE PER MECHANICAL DRAWINGS. COORDINATE OPENING SIZE AND ATTACHMENT WITH EOR.
8. SUBMIT EQUIPMENT WEIGHT FOR REVIEW PRIOR TO INSTALLATION. SEE DETAIL 1/00-S-105 FOR TYPICAL EQUIPMENT PADS. LOCATION & SIZE OF EQUIPMENT PADS TO BE COORDINATED WITH MECHANICAL/ ELECTRICAL/ PLUMBING DRAWINGS. EQUIPMENT ANCHORAGE PER PROJECT SPECIFICATIONS.
9. FOR TYPICAL MAT SLAB EDGE, REFER TO DETAIL 13/00-S-102.
10. PROVIDE COMPLETE DESIGN PACKAGE FOR DAVIT AND MIXERS.
11. PROVIDE COMPLETE DESIGN PACKAGE FOR FRP BAFFLES (INCLUDING ANCHORAGE) SIGNED BY A REGISTERED PROFESSIONAL ENGINEER FOR REVIEW. CARE TO BE TAKEN TO NOT HIT REINFORCEMENT.

8' 4' 0' 8' 16'
1/8" = 1'-0"

90% SUBMITTAL- NOT FOR CONSTRUCTION

NO.	BY	CHK	APP	DATE	REVISIONS AND RECORD OF USE

REGISTERED PROFESSIONAL ENGINEER
CHARLES R. ASHLEY JR.
S 5258
STRUCTURAL
STATE OF CALIFORNIA

Ashley & Vance ENGINEERING, INC
JOINT VENTURE
BLACK & VEATCH
FILANC

CITY OF MORRO BAY
MORRO BAY WATER RECLAMATION FACILITY (WRF)

TREATMENT AREA
STRUCTURAL
SECTIONS & DETAILS 1

DESIGNED: M. MARSH
DETAILED: S. BENJAMIN
CHECKED: I. SHOEBRIDGE
APPROVED: C. ASHLEY
DATE:

0 1/2 1
IF THIS BAR DOES NOT MEASURE 1" THEN DRAWING IS NOT TO FULL SCALE

PROJECT NO. 400530

30-S-301
SHEET OF

PLOTTED: 3/24/2020 12:48:06 PM
D400530

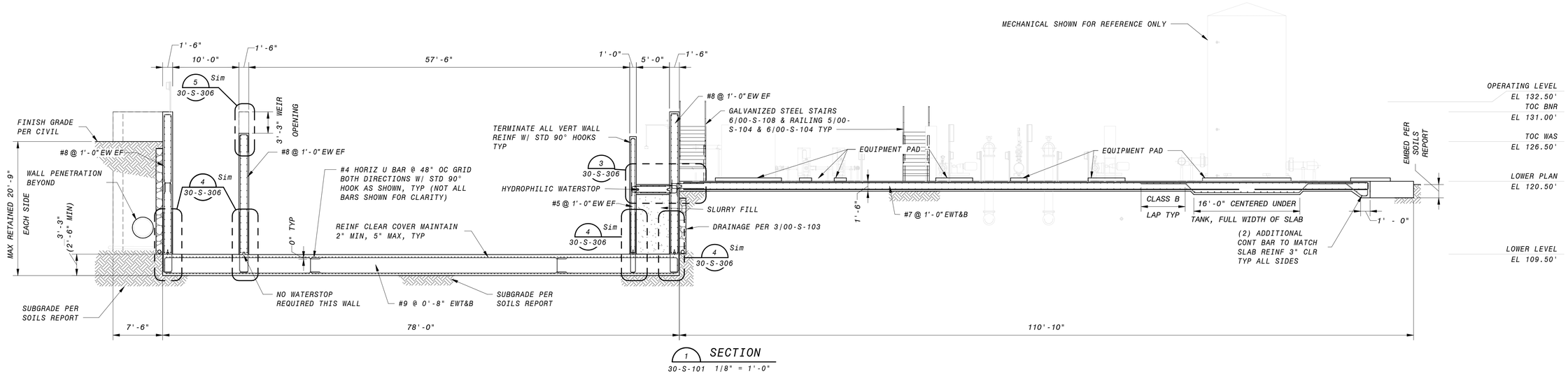

1 SECTION
30-S-101 1/8" = 1'-0"

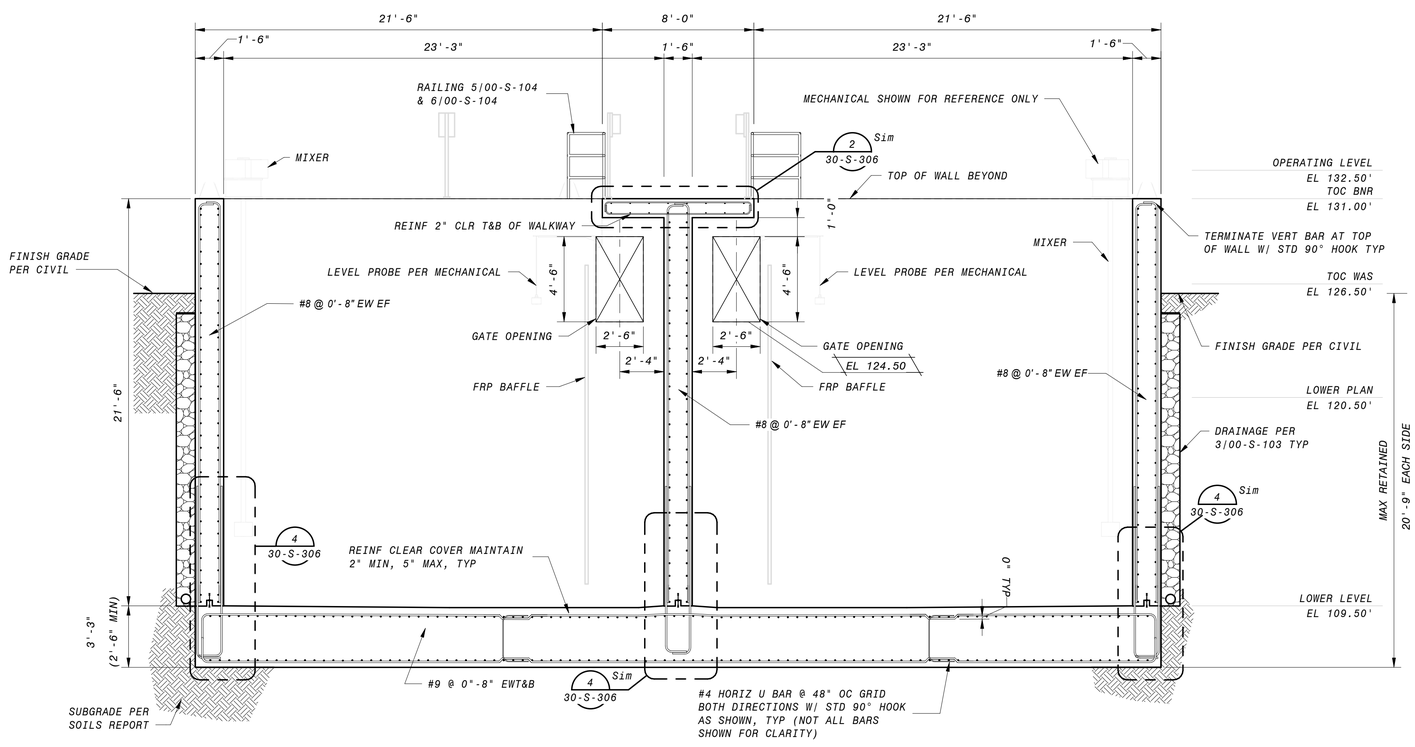

4 SECTION
30-S-101 1/4" = 1'-0"

GENERAL SECTION NOTES

1. FOR GENERAL STRUCTURAL NOTES, SEE SHEET 00-S-002 AND STANDARD SPECIFICATIONS.
2. AT WALLS 12" THICK OR LESS, PROVIDE A 6" WATERSTOP, UNO. AT WALLS GREATER THAN 12" THICK, PROVIDE A 9" WATERSTOP, UNO. REFER TO DETAIL 2 ON SHEET 00-S-103.
3. REINFORCEMENT CLEAR COVER TO BE 2" EF FOR WALLS, 2" AT TOP OF SLABS, AND 3" AT BOTTOM OF SLABS, TYP., UNO
4. ALL LAP SPLICES TO BE CLASS B PER DETAIL 1/00-S-101.
5. REFER TO MECHANICAL DRAWINGS FOR SIZE AND LOCATIONS OF PIPE PENETRATIONS AND WALL OPENINGS. SEE DETAIL 9/00-S-101 FOR TYPICAL REINFORCEMENT REQUIREMENTS. COORDINATE PIPE PENETRATION SEAL WITH MECHANICAL EOR (WHERE OCCURS).
6. PROVIDE WEIR PLATE PER MECHANICAL DRAWINGS. COORDINATE OPENING SIZE & PLATE ATTACHMENT WITH EOR.
7. PROVIDE GATE PER MECHANICAL DRAWINGS. COORDINATE OPENING SIZE WITH EOR.
8. SUBMIT EQUIPMENT WEIGHT FOR REVIEW PRIOR TO INSTALLATION. SEE DETAIL 1/00-S-105 FOR TYPICAL EQUIPMENT PADS. LOCATION & SIZE OF EQUIPMENT PADS TO BE COORDINATED WITH MECHANICAL/ ELECTRICAL/ PLUMBING DRAWINGS. EQUIPMENT ANCHORAGE PER PROJECT SPECIFICATIONS.
9. PROVIDE COMPLETE DESIGN PACKAGE FOR FRP BAFFLES (INCLUDING ANCHORAGE) SIGNED BY A REGISTERED PROFESSIONAL ENGINEER FOR REVIEW. CARE TO BE TAKEN TO NOT HIT REINFORCEMENT.
10. FOR TYPICAL MAT SLAB EDGE, REFER TO DETAIL 13/00-S-102.
11. PROVIDE COMPLETE DESIGN PACKAGE FOR DAVIT AND MIXERS.

4' 2' 0' 4' 8'
1/4" = 1'-0"

8' 4' 0' 8' 16'
1/8" = 1'-0"

90% SUBMITTAL- NOT FOR CONSTRUCTION

NO.	BY	CHK	APP	DATE	REVISIONS AND RECORD OF USE

REGISTERED PROFESSIONAL ENGINEER CHARLES R. ASHLEY JR. S 5258 STRUCTURAL STATE OF CALIFORNIA

Ashley & Vance ENGINEERING, INC
BLACK & VEATCH
JOINT VENTURE
FILANC

CITY OF MORRO BAY
MORRO BAY WATER
RECLAMATION FACILITY (WRF)

TREATMENT AREA
STRUCTURAL
SECTIONS & DETAILS 2

DESIGNED: M. MARSH
DETAILED: S. BENJAMIN
CHECKED: I. SHOEBRIDGE
APPROVED: C. ASHLEY
DATE:

0 1/2 1
IF THIS BAR DOES NOT MEASURE 1" THEN DRAWING IS NOT TO FULL SCALE

PROJECT NO. 400530

30-S-302
SHEET OF

PLOTTED: 3/24/2020 12:48:07 PM
0400530

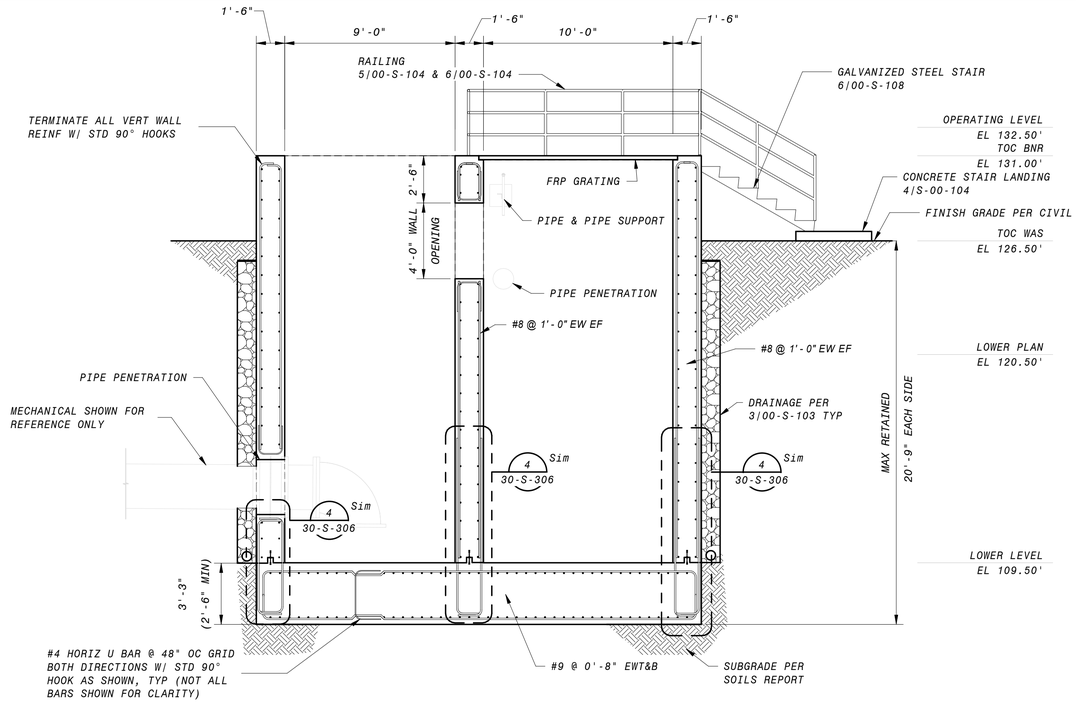

1 SECTION
30-S-101 1/4" = 1'-0"

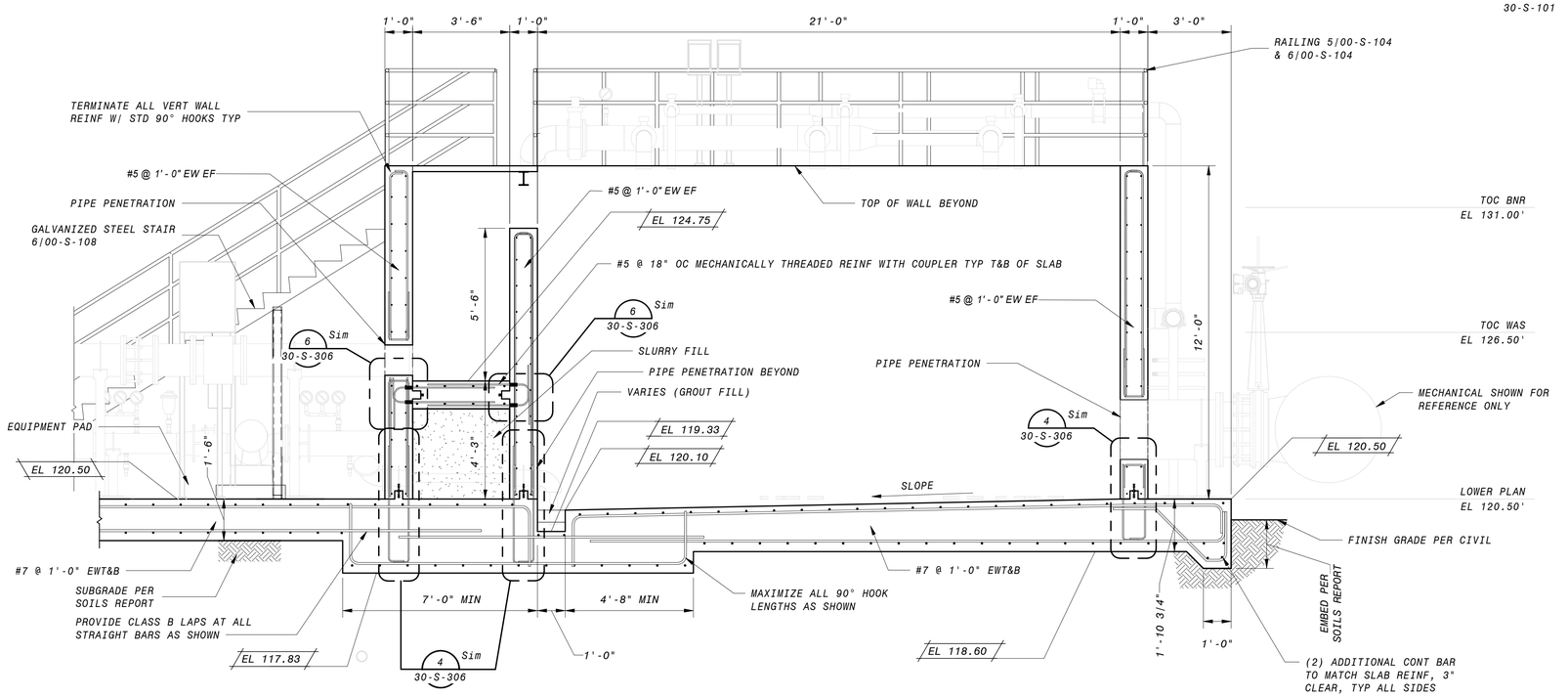

2 SECTION
30-S-101 3/8" = 1'-0"

GENERAL SECTION NOTES

1. FOR GENERAL STRUCTURAL NOTES, SEE SHEETS 00-S-002 AND STANDARD SPECIFICATIONS.
2. AT WALLS 12" THICK OR LESS, PROVIDE A 6" WATERSTOP, UNO. AT WALLS GREATER THAN 12" THICK, PROVIDE A 9" WATERSTOP, UNO. REFER TO DETAIL 2 ON SHEET 00-S-103.
3. REINFORCEMENT CLEAR COVER TO BE 2" EF FOR WALLS, 2" AT TOP OF SLABS, AND 3" AT BOTTOM OF SLABS, TYP., UNO
4. FURNISH FRP OR GALVANIZED GRATING COVER DESIGNED FOR OUTDOOR INSTALLATION IN A COASTAL ENVIRONMENT. GRATING SHALL BE DESIGNED 100 PSF UNIFORM DISTRIBUTED LIVE LOAD, 300 LB CONCENTRATED LIVE LOAD, AND LESSER OF L/200 OR 1/4" DEFLECTION. COLOR SHALL BE SELECTED IN SUBMITTAL REVIEW FROM MANUFACTURER STANDARD COLOR SELECTIONS.
5. ALL LAP SPLICES TO BE CLASS B PER DETAIL 1/00-S-101.
6. REFER TO MECHANICAL DRAWINGS FOR SIZE AND LOCATIONS OF PIPE PENETRATIONS AND WALL OPENINGS. SEE DETAIL 9/00-S-101 FOR TYPICAL REINFORCEMENT REQUIREMENTS. COORDINATE PIPE PENETRATION SEAL WITH EOR (WHERE OCCURS).
7. PROVIDE WEIR PLATE PER MECHANICAL DRAWINGS. COORDINATE OPENING SIZE & PLATE ATTACHMENT WITH EOR.
8. PROVIDE GATE PER MECHANICAL DRAWINGS. COORDINATE OPENING SIZE WITH EOR.
9. SUBMIT EQUIPMENT WEIGHT FOR REVIEW PRIOR TO INSTALLATION. SEE DETAIL 1/00-S-105 FOR TYPICAL EQUIPMENT PADS. LOCATION & SIZE OF EQUIPMENT PADS TO BE COORDINATED WITH MECHANICAL/ ELECTRICAL/ PLUMBING DRAWINGS. EQUIPMENT ANCHORAGE PER PROJECT SPECIFICATIONS.
10. PROVIDE COMPLETE DESIGN PACKAGE FOR FRP BAFFLES (INCLUDING ANCHORAGE) SIGNED BY A REGISTERED PROFESSIONAL ENGINEER FOR REVIEW. CARE TO BE TAKEN TO NOT HIT REINFORCEMENT.
11. FOR TYPICAL MAT SLAB EDGE, REFER TO DETAIL 13/00-S-102.

4' 2' 0' 4' 8'
1/4" = 1'-0"

12" 0' 1' 2' 3' 4' 5' 6' 7'
3/8" = 1'-0"

90% SUBMITTAL- NOT FOR CONSTRUCTION

NO.	BY	CHK	APP	DATE	REVISIONS AND RECORD OF USE

REGISTERED PROFESSIONAL ENGINEER
CHARLES R. ASHLEY JR.
S 5258
STRUCTURAL
STATE OF CALIFORNIA

Ashley&Vance ENGINEERING, INC
JOINT VENTURE
BLACK&VEATCH
FILANC

CITY OF MORRO BAY
MORRO BAY WATER
RECLAMATION FACILITY (WRF)

TREATMENT AREA
STRUCTURAL
SECTIONS & DETAILS 3

DESIGNED: M. MARSH
DETAILED: S. BENJAMIN
CHECKED: I. SHOEBRIDGE
APPROVED: C. ASHLEY
DATE:

0 1/2 1
IF THIS BAR DOES NOT MEASURE 1" THEN DRAWING IS NOT TO FULL SCALE

PROJECT NO.
400530

30-S-303
SHEET
OF

PLOTTED: 3/24/2020 12:48:08 PM
0400530

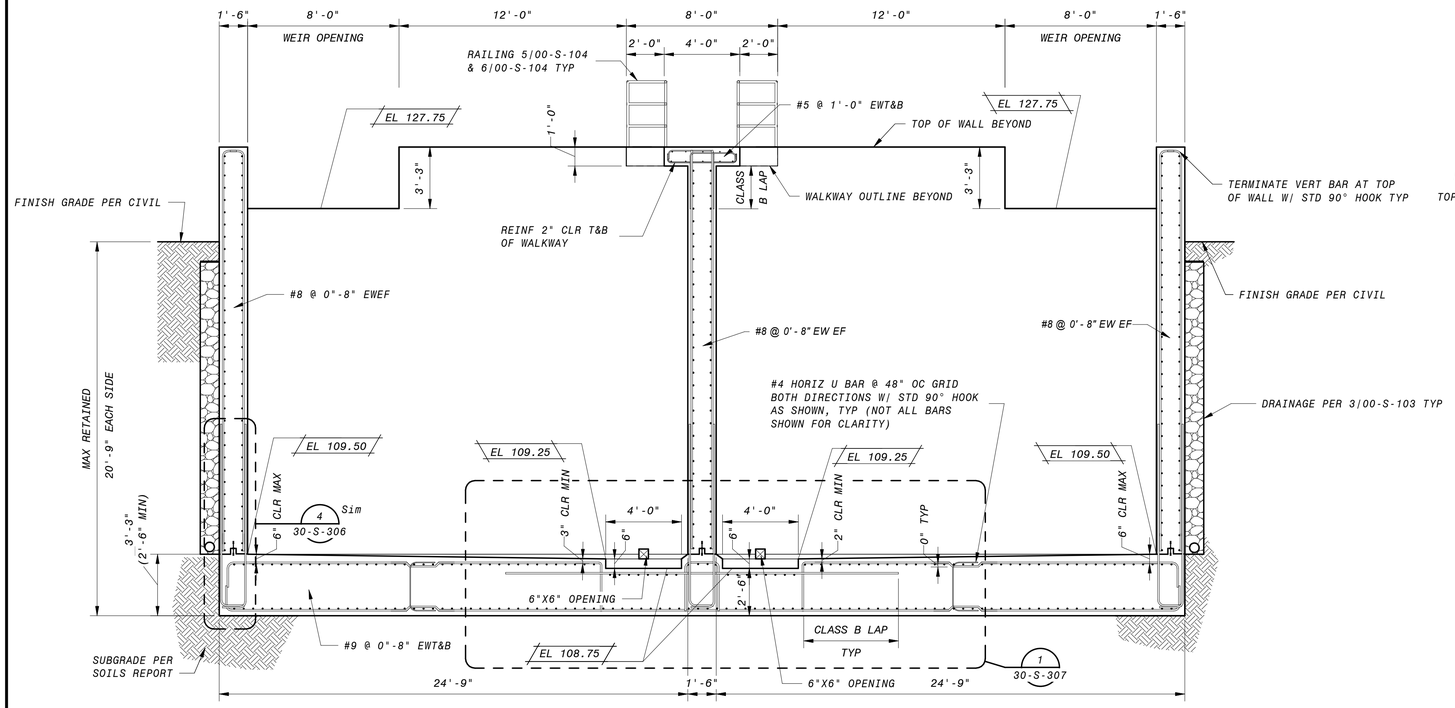

3 SECTION
30-S-102 1/4" = 1'-0"

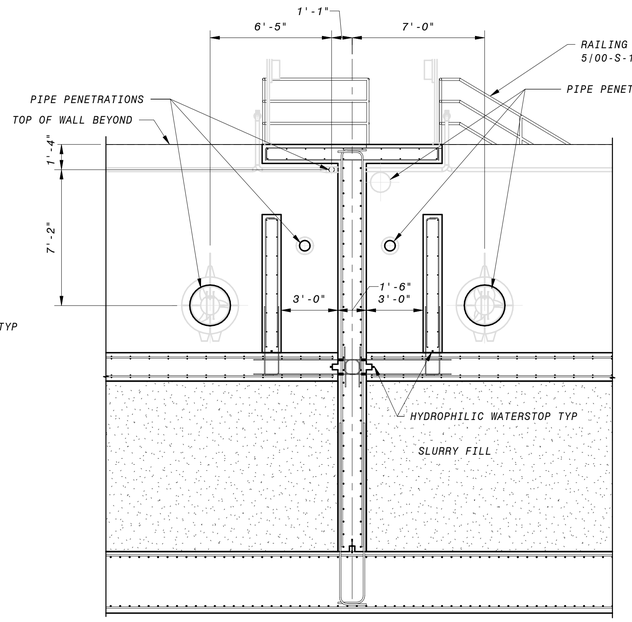

1 PIPE PENETRATIONS
30-S-101 1/4" = 1'-0"

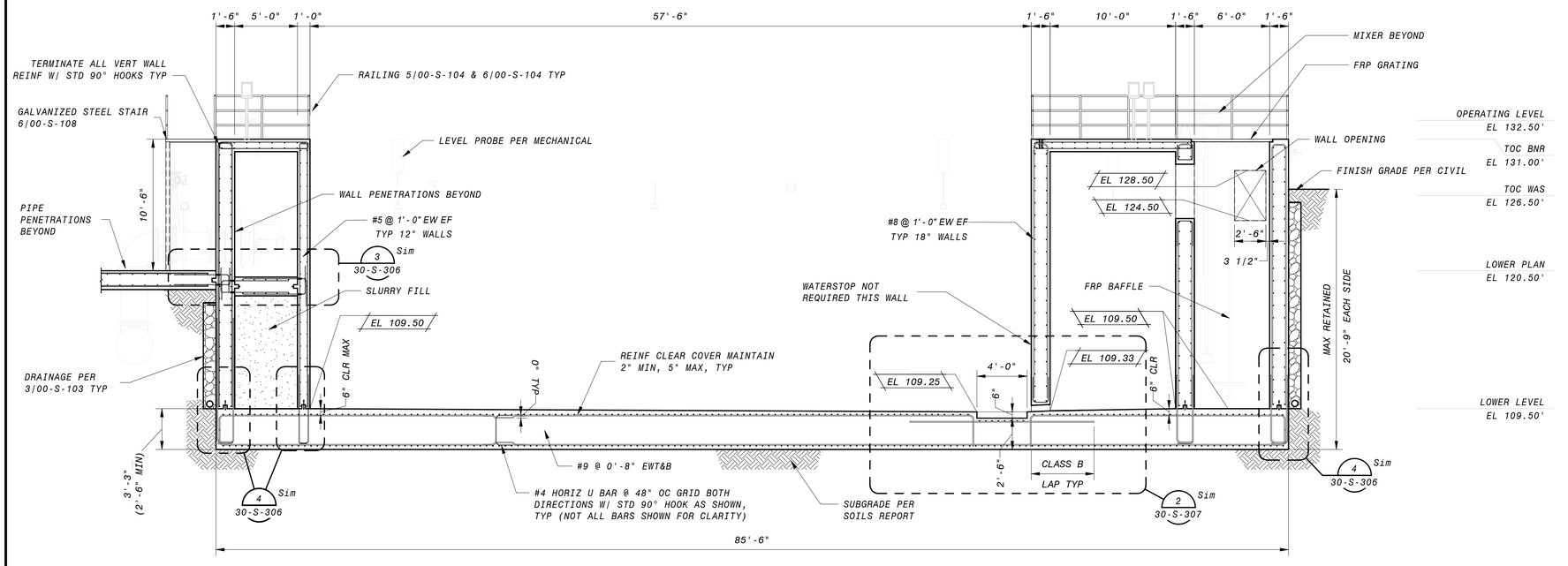

4 SECTION
30-S-102 3/16" = 1'-0"

GENERAL SECTION NOTES

1. FOR GENERAL STRUCTURAL NOTES, SEE SHEET 00-S-002 AND STANDARD SPECIFICATIONS.
2. AT WALLS 12" THICK OR LESS, PROVIDE A 6" WATERSTOP, UNO. AT WALLS GREATER THAN 12" THICK, PROVIDE A 9" WATERSTOP, UNO. REFER TO DETAIL 2 ON SHEET 00-S-103.
3. REINFORCEMENT CLEAR COVER TO BE 2" EF FOR WALLS, 2" AT TOP OF SLABS, AND 3" AT BOTTOM OF SLABS, TYP., UNO
4. ALL LAP SPLICES TO BE CLASS B PER DETAIL 1/00-S-101.
5. REFER TO MECHANICAL DRAWINGS FOR SIZE AND LOCATIONS OF PIPE PENETRATIONS AND WALL OPENINGS. SEE DETAIL 9/00-S-101 FOR TYPICAL REINFORCEMENT REQUIREMENTS. COORDINATE PIPE PENETRATION SEAL WITH MECHANICAL EOR (WHERE OCCURS).
6. PROVIDE COMPLETE DESIGN PACKAGE FOR FRP BAFFLES (INCLUDING ANCHORAGE) SIGNED BY A REGISTERED PROFESSIONAL ENGINEER FOR REVIEW. CARE TO BE TAKEN TO NOT HIT REINFORCEMENT.

6" 4' 2' 0' 5' 10'
3/16" = 1'-0"

4' 2' 0' 4' 8'
1/4" = 1'-0"

IF THIS BAR DOES NOT MEASURE 1" THEN DRAWING IS NOT TO FULL SCALE

90% SUBMITTAL- NOT FOR CONSTRUCTION

NO.	BY	CHK	APP	DATE	REVISIONS AND RECORD OF USE

REGISTERED PROFESSIONAL ENGINEER CHARLES R. ASHLEY JR. S 5258 STRUCTURAL STATE OF CALIFORNIA

Ashley & Vance ENGINEERING, INC
JOINT VENTURE
BLACK & VEATCH
FILANC

CITY OF MORRO BAY
MORRO BAY WATER
RECLAMATION FACILITY (WRF)

TREATMENT AREA
STRUCTURAL
SECTIONS & DETAILS 4

DESIGNED: M. MARSH
DETAILED: S. BENJAMIN
CHECKED: I. SHOEBRIDGE
APPROVED: C. ASHLEY
DATE:

PROJECT NO. 400530

30-S-304
SHEET
OF

PLOTTED: 3/24/2020 12:48:08 PM
D400530

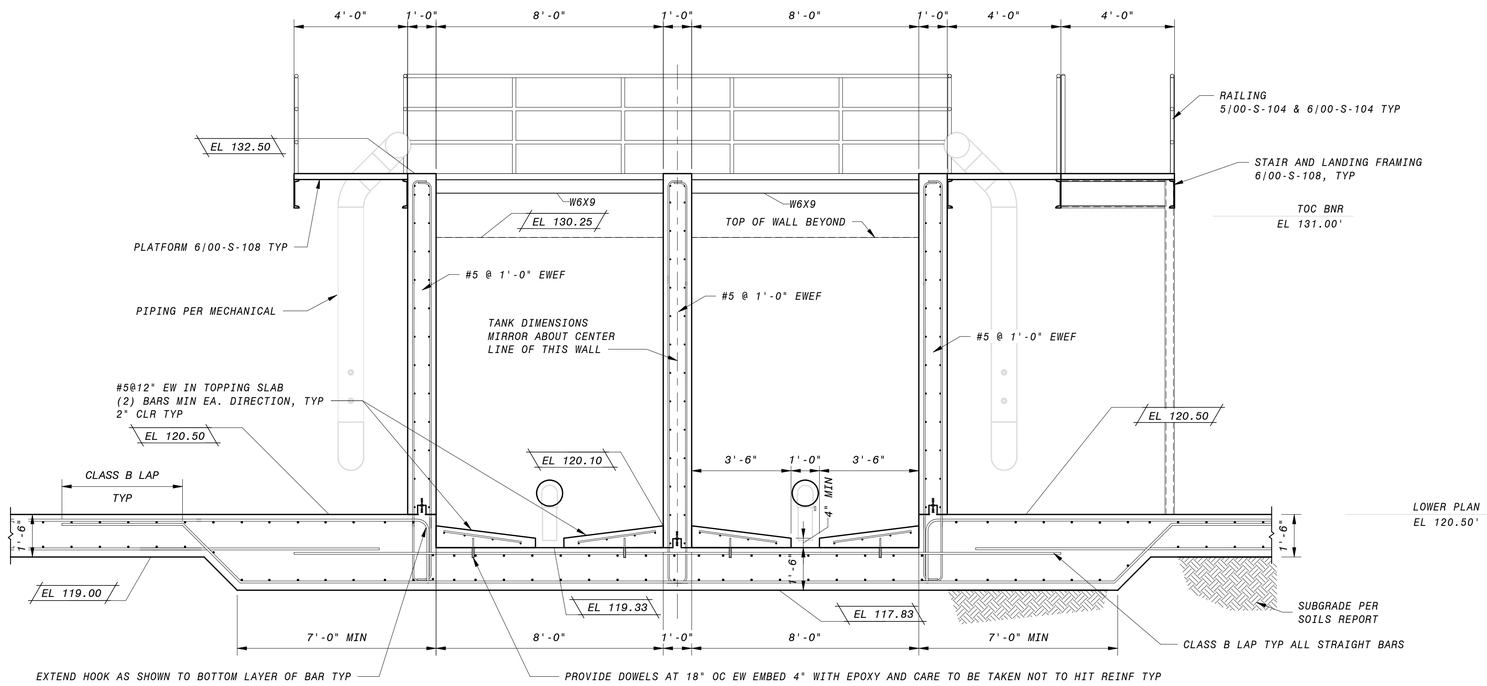

1 SECTION
30-S-101 3/8" = 1'-0"

GENERAL SECTION NOTES

1. FOR GENERAL STRUCTURAL NOTES, SEE SHEET 00-S-002 AND STANDARD SPECIFICATIONS.
2. AT WALLS 12" THICK OR LESS, PROVIDE A 6" WATERSTOP, UNO. AT WALLS GREATER THAN 12" THICK, PROVIDE A 9" WATERSTOP, UNO. REFER TO DETAIL 2 ON SHEET 00-S-103.
3. REINFORCEMENT CLEAR COVER TO BE 2" EF FOR WALLS, 2" AT TOP OF SLABS, AND 3" AT BOTTOM OF SLABS, TYP., UNO
4. ALL LAP SPLICES TO BE CLASS B PER DETAIL 1/00-S-101.
5. FURNISH FRP OR GALVANIZED GRATING COVER DESIGNED FOR OUTDOOR INSTALLATION IN A COASTAL ENVIRONMENT. GRATING SHALL BE DESIGNED 100 PSF UNIFORM DISTRIBUTED LIVE LOAD, 300 LB CONCENTRATED LIVE LOAD, AND LESSER OF L/200 OR 1/4" DEFLECTION. COLOR SHALL BE SELECTED IN SUBMITTAL REVIEW FROM MANUFACTURER STANDARD COLOR SELECTIONS.
6. REFER TO MECHANICAL DRAWINGS FOR SIZE AND LOCATIONS OF PIPE PENETRATIONS AND WALL OPENINGS. SEE DETAIL 9/00-S-101 FOR TYPICAL REINFORCEMENT REQUIREMENTS. COORDINATE PIPE PENETRATION SEAL WITH MECHANICAL EOR (WHERE OCCURS).
7. SUBMIT EQUIPMENT WEIGHT FOR REVIEW PRIOR TO INSTALLATION. SEE DETAILS 1/00-S-105 FOR TYPICAL EQUIPMENT PADS. LOCATION & SIZE OF EQUIPMENT PADS TO BE COORDINATED WITH MECHANICAL/ ELECTRICAL/ PLUMBING DRAWINGS. EQUIPMENT ANCHORAGE PER PROJECT SPECIFICATIONS.

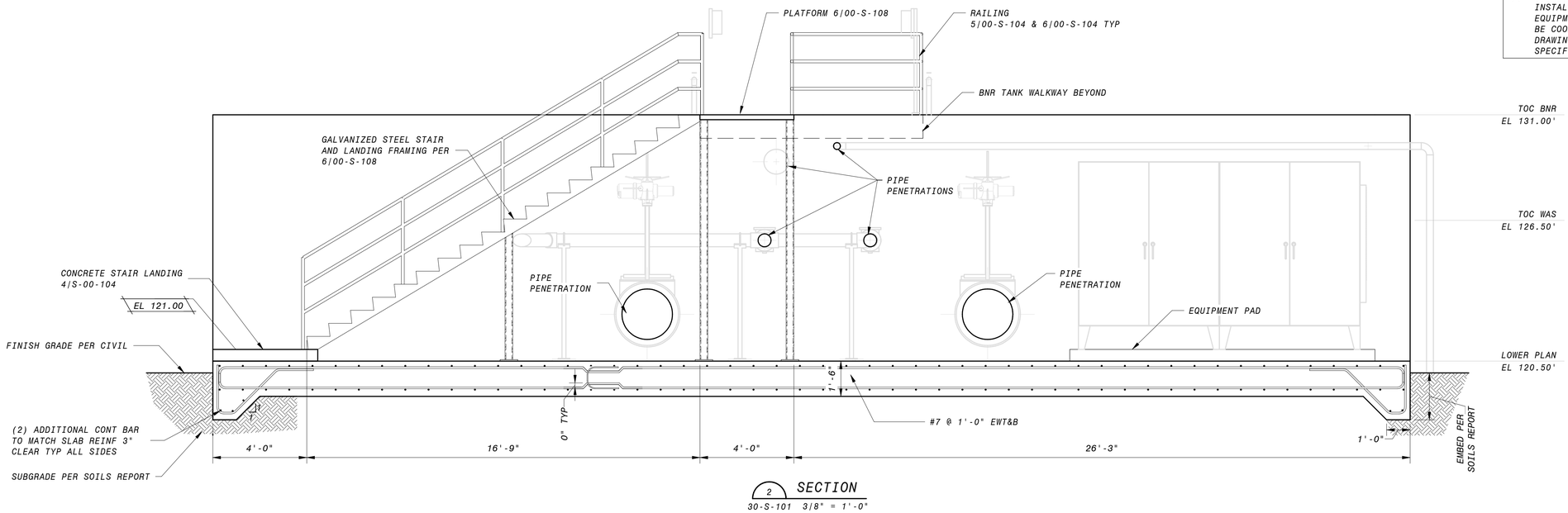

2 SECTION
30-S-101 3/8" = 1'-0"

12" 0' 1' 2' 3' 4' 5' 6' 7'
3/8" = 1'-0"

90% SUBMITTAL- NOT FOR CONSTRUCTION

NO.	BY	CHK	APP	DATE	REVISIONS AND RECORD OF USE

REGISTERED PROFESSIONAL ENGINEER
CHARLES R. ASHLEY JR.
S 5258
STRUCTURAL
STATE OF CALIFORNIA

Ashley & Vance ENGINEERING, INC
JOINT VENTURE
BLACK & VEATCH
FILANC

CITY OF MORRO BAY
MORRO BAY WATER
RECLAMATION FACILITY (WRF)

TREATMENT AREA
STRUCTURAL
SECTIONS & DETAILS 5

DESIGNED: M. MARSH
DETAILED: S. BENJAMIN
CHECKED: I. SHOEBRIDGE
APPROVED: C. ASHLEY
DATE:

0 1/2 1
IF THIS BAR DOES NOT MEASURE 1" THEN DRAWING IS NOT TO FULL SCALE

PROJECT NO.
400530

30-S-305
SHEET
OF

PLOTTED: 3/24/2020 12:48:09 PM
D400530

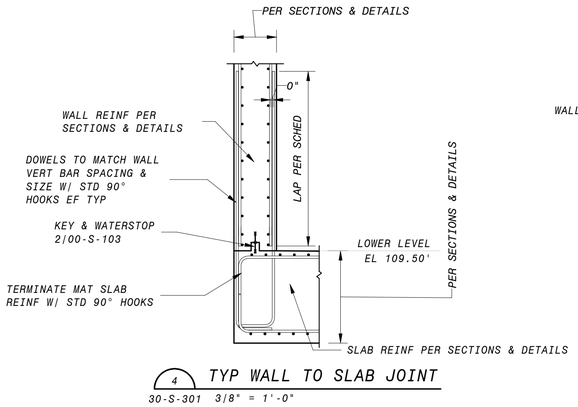

4 TYP WALL TO SLAB JOINT
30-S-301 3/8" = 1'-0"

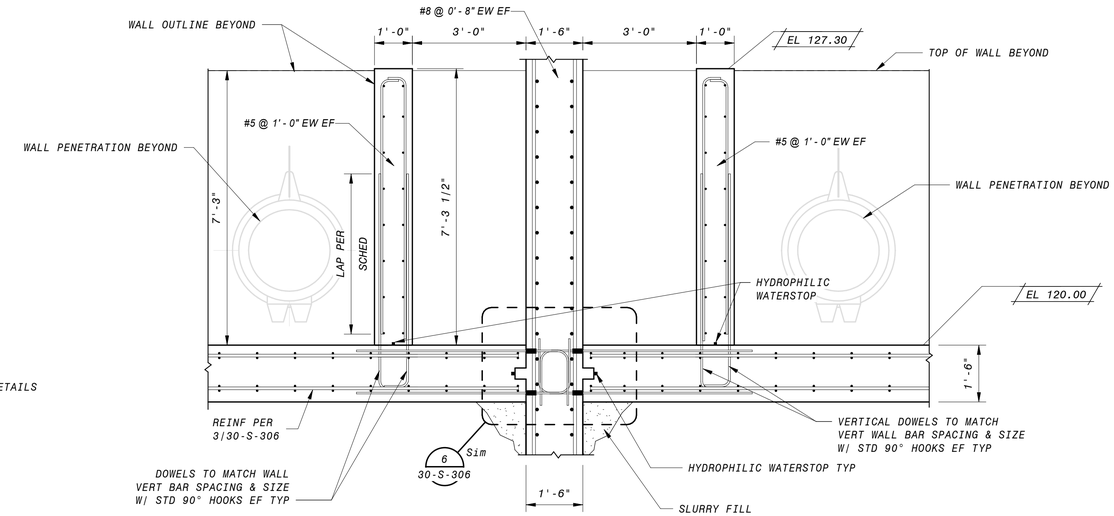

1 SECTION
30-S-301 1/2" = 1'-0"

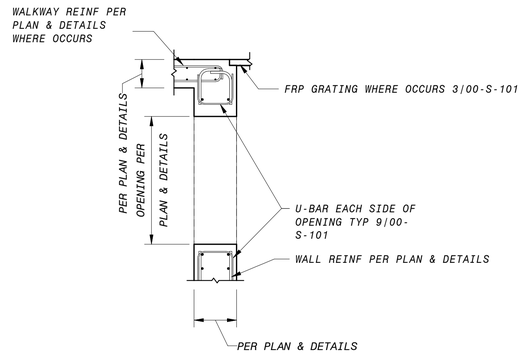

5 TYP WALL OPENING
30-S-301 3/8" = 1'-0"

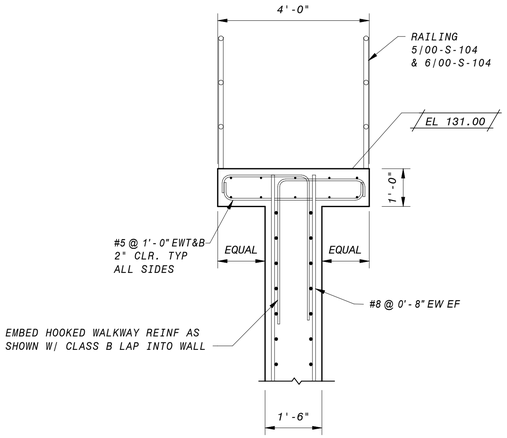

2 TYP WALKWAY TO WALL
30-S-101 1/2" = 1'-0"

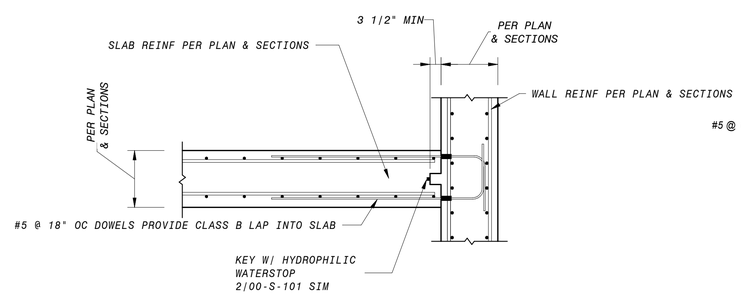

6 SLAB TO WALL JOINT
30-S-301 1/2" = 1'-0"

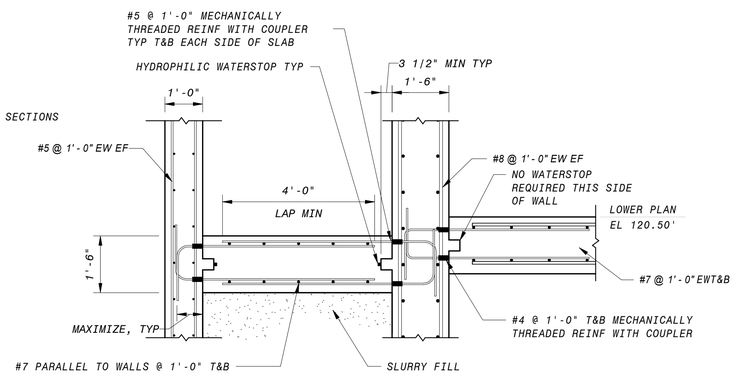

3 SECTION
30-S-301 1/2" = 1'-0"

GENERAL SECTION NOTES

1. FOR GENERAL STRUCTURAL NOTES, SEE SHEETS 00-S-002 AND STANDARD SPECIFICATIONS.
2. AT WALLS 12" THICK OR LESS, PROVIDE A 6" WATERSTOP, UNO. AT WALLS GREATER THAN 12" THICK, PROVIDE A 9" WATERSTOP, UNO. REFER TO DETAIL 2 ON SHEET 00-S-006.
3. REINFORCEMENT CLEAR COVER TO BE 2" EF FOR WALLS, 2" AT TOP OF SLABS, AND 3" AT BOTTOM OF SLABS, TYP., UNO
4. FURNISH FRP OR GALVANIZED GRATING COVER DESIGNED FOR OUTDOOR INSTALLATION IN A COASTAL ENVIRONMENT. GRATING SHALL BE DESIGNED 100 PSF UNIFORM DISTRIBUTED LIVE LOAD, 300 LB CONCENTRATED LIVE LOAD, AND LESSER OF L/200 OR 1/4" DEFLECTION. COLOR SHALL BE SELECTED IN SUBMITTAL REVIEW FROM MANUFACTURER STANDARD COLOR SELECTIONS.
5. ALL LAP SPLICES TO BE CLASS B PER DETAIL 1/00-S-004.
6. REFER TO MECHANICAL DRAWINGS FOR SIZE AND LOCATIONS OF PIPE PENETRATIONS AND WALL OPENINGS. SEE DETAIL 9/00-S-004 FOR TYPICAL REINFORCEMENT REQUIREMENTS. COORDINATE PIPE PENETRATION SEAL WITH EOR (WHERE OCCURS).
7. PROVIDE GATE PER MECHANICAL DRAWINGS. COORDINATE OPENING SIZE WITH EOR.
8. ALL MECHANICAL SPLICES SHALL BE TYPE 2 AND DEVELOP AT LEAST 1.25FY OF THE BAR.

12" 0' 1' 2' 3' 4' 5' 6' 7'
3/8" = 1'-0"

12' 6' 0' 1' 2' 3' 4' 5'
1/2" = 1'-0"

90% SUBMITTAL- NOT FOR CONSTRUCTION

NO.	BY	CHK	APP	DATE	REVISIONS AND RECORD OF USE

REGISTERED PROFESSIONAL ENGINEER CHARLES R. ASHLEY JR. S 5258 STRUCTURAL STATE OF CALIFORNIA

Ashley & Vance ENGINEERING, INC
JOINT VENTURE
BLACK & VEATCH
FILANC

CITY OF MORRO BAY
MORRO BAY WATER RECLAMATION FACILITY (WRF)

TREATMENT AREA
STRUCTURAL
SECTIONS & DETAILS 6

DESIGNED: M. MARSH
DETAILED: S. BENJAMIN
CHECKED: I. SHOEBRIDGE
APPROVED: C. ASHLEY
DATE:

0 1/2 1
IF THIS BAR DOES NOT MEASURE 1" THEN DRAWING IS NOT TO FULL SCALE

PROJECT NO. 400530

30-S-306
SHEET OF

PLOTTED: 3/24/2020 12:49:09 PM
D400530

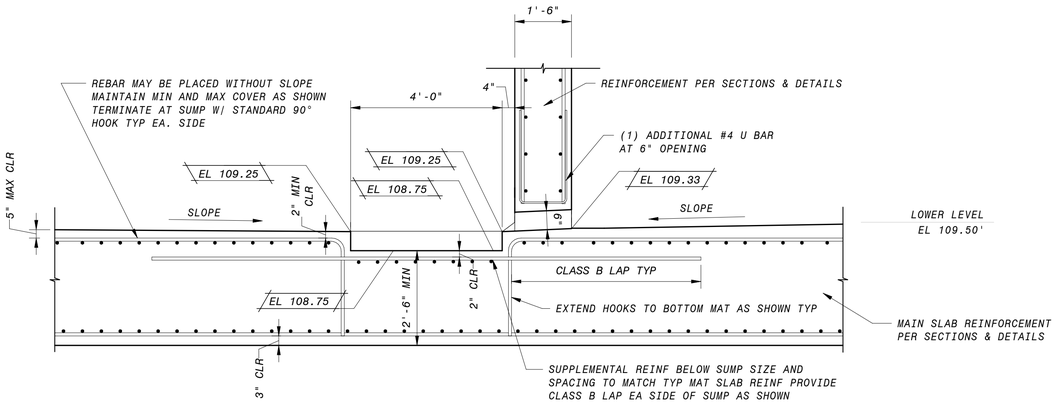

2 WALL TO SLAB AT SUMP DETAIL 2
30-S-301 1/2" = 1'-0"

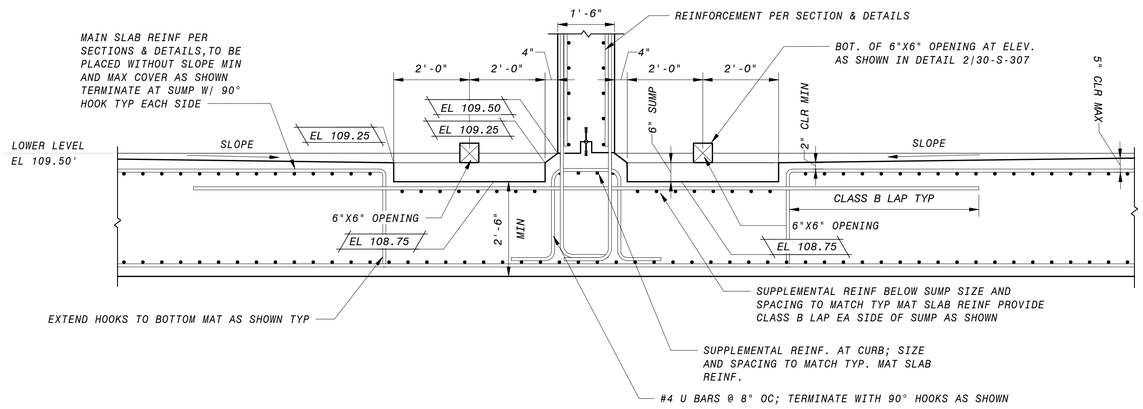

1 WALL TO SLAB @ SUMP DETAIL 1
30-S-304 1/2" = 1'-0"

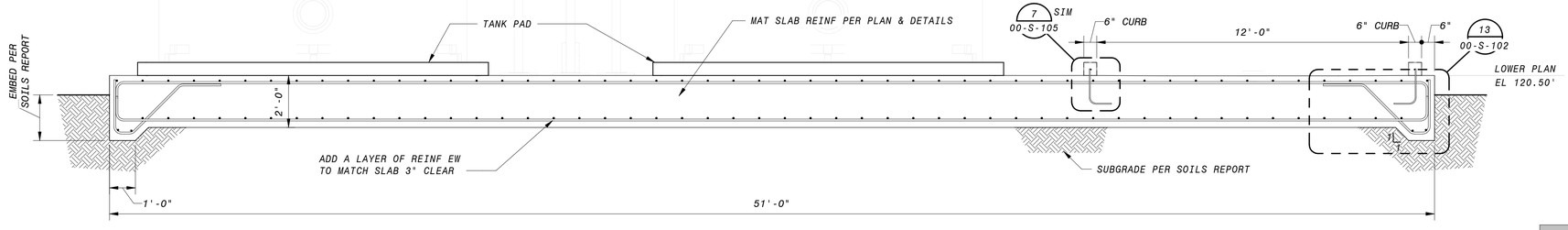

3 TYP SECTION @ RO TANKS
30-S-101 3/8" = 1'-0"

GENERAL SECTION NOTES

1. FOR GENERAL STRUCTURAL NOTES, SEE SHEETS 00-S-002 AND STANDARD SPECIFICATIONS.
2. AT WALLS 12" THICK OR LESS, PROVIDE A 6" WATERSTOP, UNO. AT WALLS GREATER THAN 12" THICK, PROVIDE A 9" WATERSTOP, UNO. REFER TO DETAIL 2 ON SHEET 00-S-006.
3. REINFORCEMENT CLEAR COVER TO BE 2" EF FOR WALLS, 2" AT TOP OF SLABS, AND 3" AT BOTTOM OF SLABS, TYP., UNO
4. ALL LAP SPLICES TO BE CLASS B PER DETAIL 1/00-S-004.
5. REFER TO MECHANICAL DRAWINGS FOR SIZE AND LOCATIONS OF PIPE PENETRATIONS AND WALL OPENINGS. SEE DETAIL 9/00-S-004 FOR TYPICAL REINFORCEMENT REQUIREMENTS. COORDINATE PIPE PENETRATION SEAL WITH EOR (WHERE OCCURS).
6. PROVIDE GATE PER MECHANICAL DRAWINGS. COORDINATE OPENING SIZE WITH EOR.
7. ALL MECHANICAL SPLICES SHALL BE TYPE 2 AND DEVELOP AT LEAST 1.25FY OF THE BAR.

12' 6' 0' 1' 2' 3' 4' 5'
1/2" = 1'-0"

90% SUBMITTAL- NOT FOR CONSTRUCTION

NO.	BY	CHK	APP	DATE	REVISIONS AND RECORD OF USE

REGISTERED PROFESSIONAL ENGINEER CHARLES R. ASHLEY JR. S 5258 STRUCTURAL STATE OF CALIFORNIA

Ashley & Vance ENGINEERING, INC

JOINT VENTURE

BLACK & VEATCH

FILANC

CITY OF MORRO BAY
MORRO BAY WATER
RECLAMATION FACILITY (WRF)

TREATMENT AREA
STRUCTURAL
SECTIONS & DETAILS 7

DESIGNED: M. MARSH
DETAILED: S. BENJAMIN
CHECKED: I. SHOEBRIDGE
APPROVED: C. ASHLEY
DATE:

0 1/2 1
IF THIS BAR DOES NOT MEASURE 1" THEN DRAWING IS NOT TO FULL SCALE

PROJECT NO. 400530

30-S-307
SHEET
OF

PLOTTED: 3/24/2020 12:48:10 PM
D400530

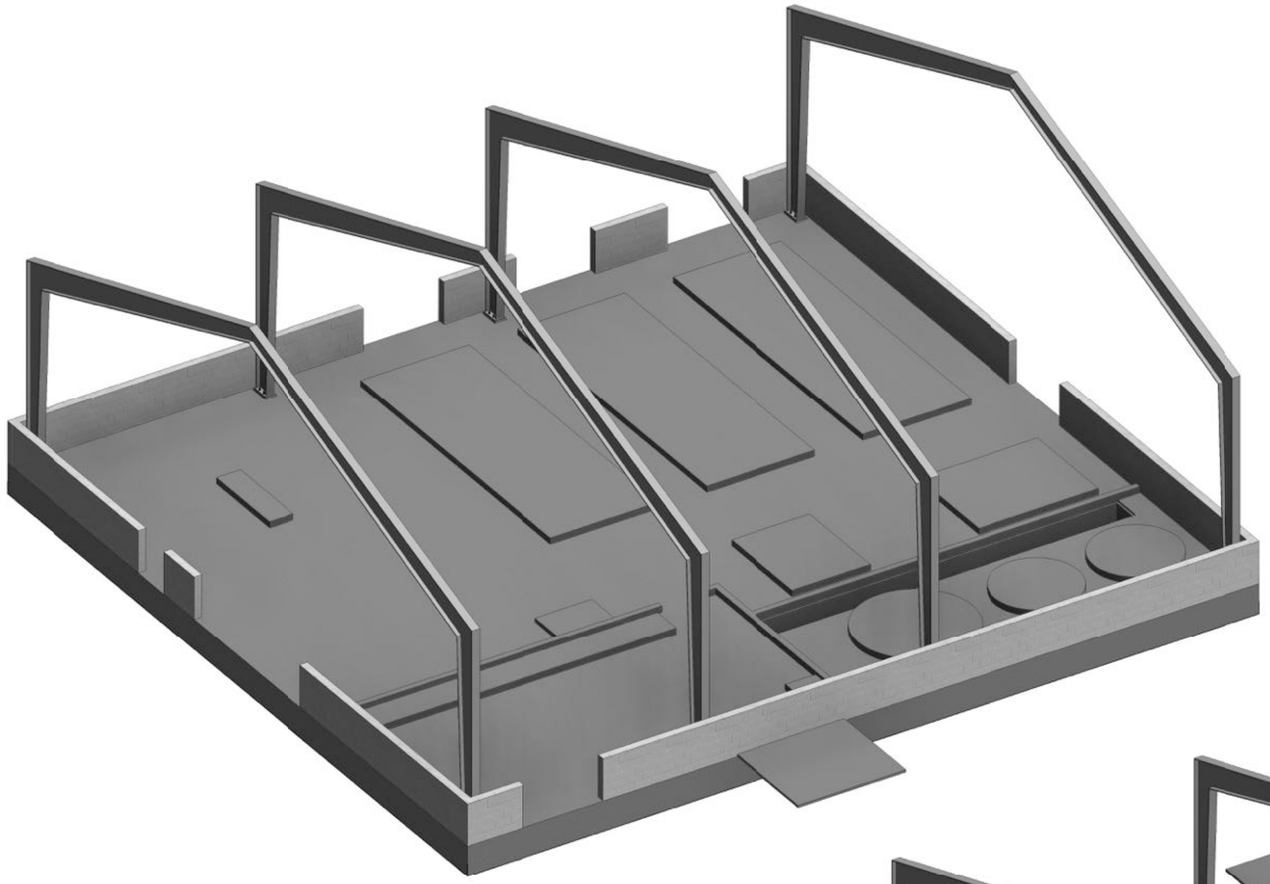

3D VIEW - EAST

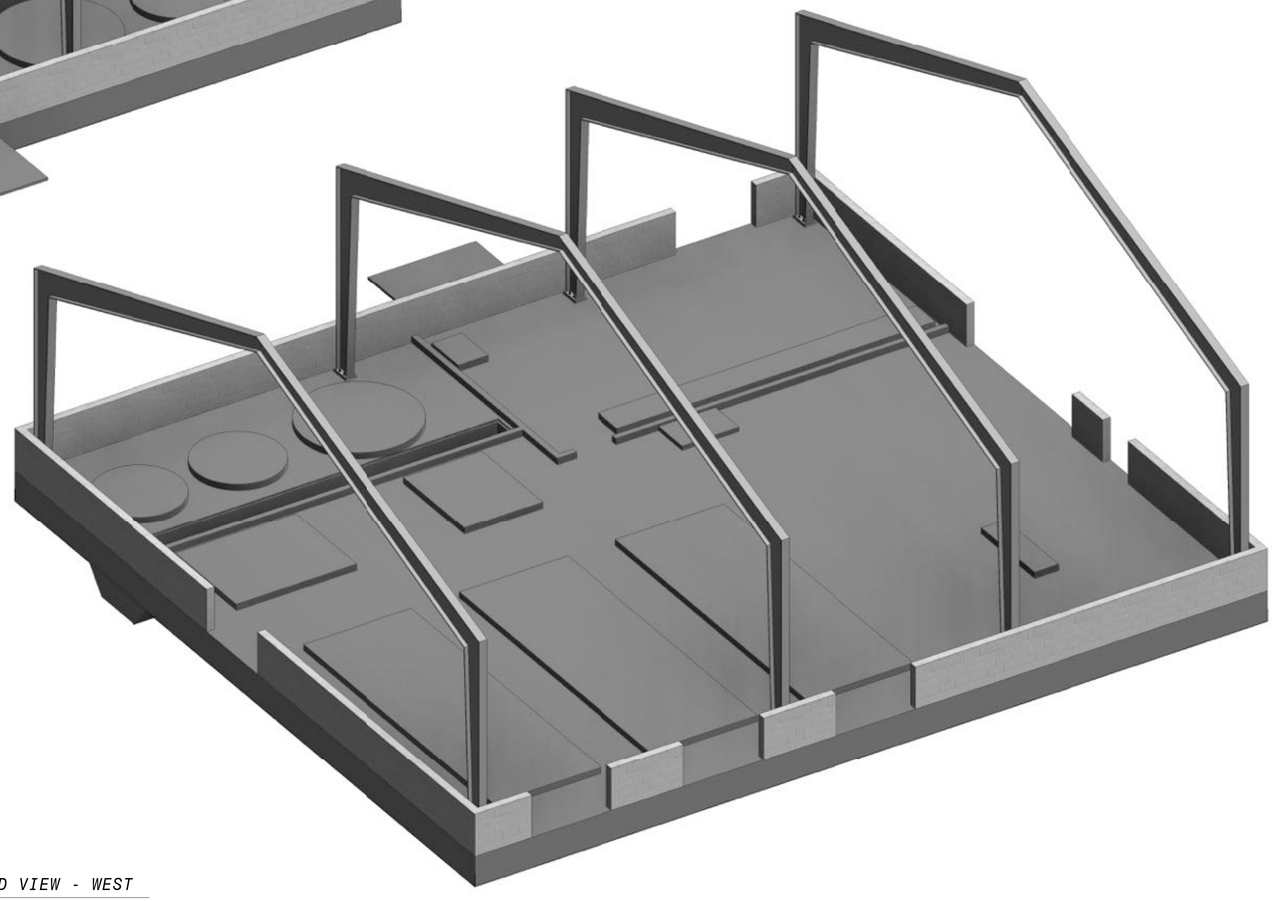

3D VIEW - WEST

90% SUBMITTAL - NOT FOR CONSTRUCTION

NO.	BY	CHK	APP	DATE	REVISIONS AND RECORD OF USE

REGISTERED PROFESSIONAL ENGINEER
CHARLES R. ASHLEY JR.
S 5258
STRUCTURAL
STATE OF CALIFORNIA

Ashley & Vance ENGINEERING, INC
JOINT VENTURE
FILANC
BLACK & VEATCH

CITY OF MORRO BAY
FILANC BLACK & VEATCH DB PROPOSAL
WATER RECLAMATION FACILITY (WRF)

RO/UV BUILDING
STRUCTURAL
3D VIEWS

DESIGNED: M. MARSH
DETAILED: S. BENJAMIN
CHECKED: I. SHOEBRIDGE
APPROVED: C. ASHLEY
DATE: XX/XX/XXXX

0 1/2 1
IF THIS BAR DOES NOT MEASURE 1" THEN DRAWING IS NOT TO FULL SCALE

PROJECT NO.
81203

50-S-001
SHEET
OF XXX

PLOTTED: 3/24/2020 12:55:09 PM
D400530

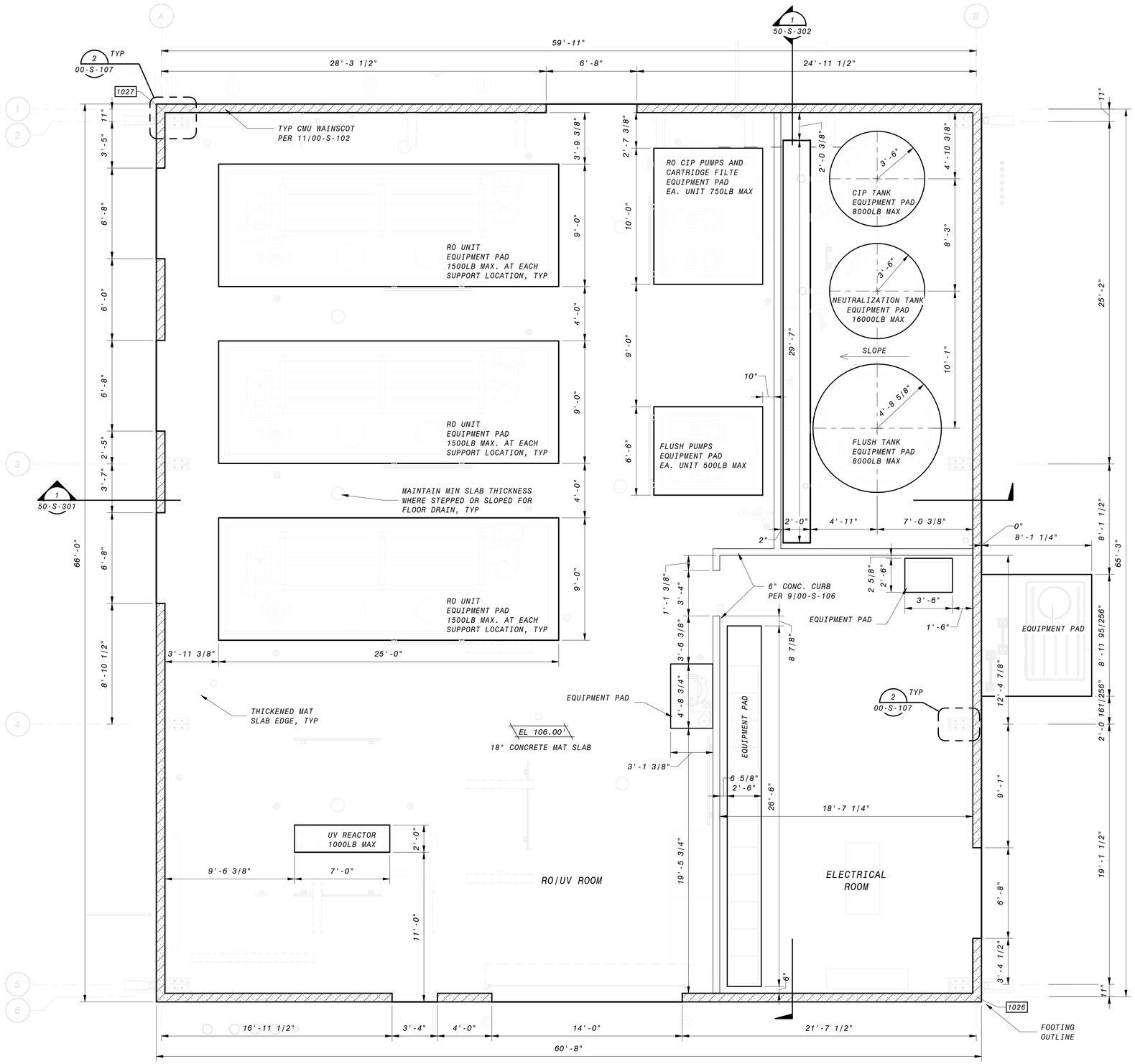

OPERATING FLOOR PLAN

1/4" = 1'-0"



1/4" = 1'-0"

NOTES:

1. *DESIGN AND DRAWINGS FOR STEEL FRAME PRE-ENGINEERED METAL BUILDING TO BE PROVIDED BY BUILDING MFR. SEE SPECIFICATIONS FOR DESIGN CRITERIA.*
2. *FOUNDATION DESIGN HAS BEEN BASED ON THE FOLLOWING FRAME REACTIONS, ASSUMING A PINNED COLUMN BASE:*

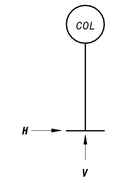

LOAD	VERTICAL V (K)	HORIZONTAL H (K)
DEAD	6.0	0.5
ROOF LIVE	10.5	1.5
SEISMIC	16.5	8.0
WIND (MAX)	7.5	7.0
WIND (MIN)	-21.5	-3.5

3. *FOUNDATION HAS BEEN DESIGNED FOR A LIVE LOAD OF 150 PSF.*
4. *FRAME REACTIONS INCLUDE BOTH PRINCIPLE DIRECTIONS AND ORTHOGONAL COMBINATION EFFECTS.*

GENERAL NOTES

1. *PLEASE SEE SOILS REPORT FOR ADDITIONAL SPECIFICATIONS AND RECOMMENDATIONS. IT IS THE DESIGN-BUILDER'S RESPONSIBILITY TO OBTAIN A COPY OF THE SOILS REPORT FROM THE OWNER OR OWNERS REPRESENTATIVE.*
2. *NOT USED*
3. *FOR GENERAL STRUCTURAL NOTES, SEE SHEETS 00-S-002 AND STANDARD SPECIFICATIONS.*
4. *VERIFY ALL DIMENSIONS PRIOR TO COMMENCEMENT OF CONSTRUCTION.*
5. *ALL LAP SPLICES TO BE CLASS B PER DETAIL 1/00-S-101.*
6. *SUBMIT EQUIPMENT WEIGHT FOR REVIEW PRIOR TO INSTALLATION. SEE DETAIL 1/00-S-105 FOR TYPICAL INTERIOR EQUIPMENT PADS AND DETAIL 10/00-S-105 FOR TYPICAL EXTERIOR EQUIPMENT PADS. LOCATION AND SIZE OF EQUIPMENT PADS TO BE COORDINATED WITH MECHANICAL/ELECTRICAL/PLUMBING DRAWINGS. EQUIPMENT ANCHORAGE PER PROJECT SPECIFICATIONS.*
7. *REFER TO MECHANICAL/ELECTRICAL/PLUMBING DRAWINGS FOR SIZE AND LOCATIONS OF PIPE PENETRATIONS AND WALL OPENINGS. SEE DETAIL 9/00-S-101 FOR TYPICAL REINFORCEMENT REQUIREMENTS. COORDINATE PIPE PENETRATION SEAL WITH MECHANICAL ENGINEER OF RECORD.*
8. *COORDINATE LOCATION AND DETAILING FOR ATTACHMENT OF MECHANICAL SUPPORTS WITH BUILDING MANUFACTURER AND MECHANICAL ENGINEER OF RECORD PRIOR TO INSTALLATION.*
9. *COORDINATE ALL INTERIOR WALLS WITH ARCHITECTURAL DRAWINGS. SEE SHEET 00-S-106 AND PROJECT SPECIFICATIONS FOR ADDITIONAL INFORMATION.*
10. *COORDINATE COLUMN SIZE, LOCATION, AND ATTACHMENT WITH BUILDING MANUFACTURER PRIOR TO INSTALLATION.*
11. *SEE DETAIL 2/00-S-102 FOR TYP MAT SLAB ON GRADE.*
12. *COORDINATION NOTES: COLD-FORMED STEEL BEAM AT ELECTRICAL ROOM IS SUPPORTED BY PEMB COLUMNS. COORDINATE LOCATION, LOADS AND ATTACHMENT DETAILS AS REQUIRED.*

90% SUBMITTAL - NOT FOR CONSTRUCTION

NO.	BY	CHK	APP	DATE	REVISIONS AND RECORD OF USE

REGISTERED PROFESSIONAL ENGINEER CHARLES R. ASHLEY JR. S 5258 STRUCTURAL STATE OF CALIFORNIA

Ashley & Vance ENGINEERING, INC

JOINT VENTURE

BLACK & VEATCH

FILANC

CITY OF MORRO BAY
FILANC BLACK & VEATCH DB PROPOSAL
WATER RECLAMATION FACILITY (WRF)

RO/UV BUILDING
STRUCTURAL
PLAN

DESIGNED: M. MARSH
DETAILED: S. BENJAMIN
CHECKED: I. SHOEBRIDGE
APPROVED: C. ASHLEY
DATE: XX/XX/XXXX

0 1/2 1

IF THIS BAR DOES NOT MEASURE 1" THEN DRAWING IS NOT TO FULL SCALE

PROJECT NO. 81203

50-S-101
SHEET
OF XXX

PLOTTED: 3/24/2020 12:55:11 PM
D400530

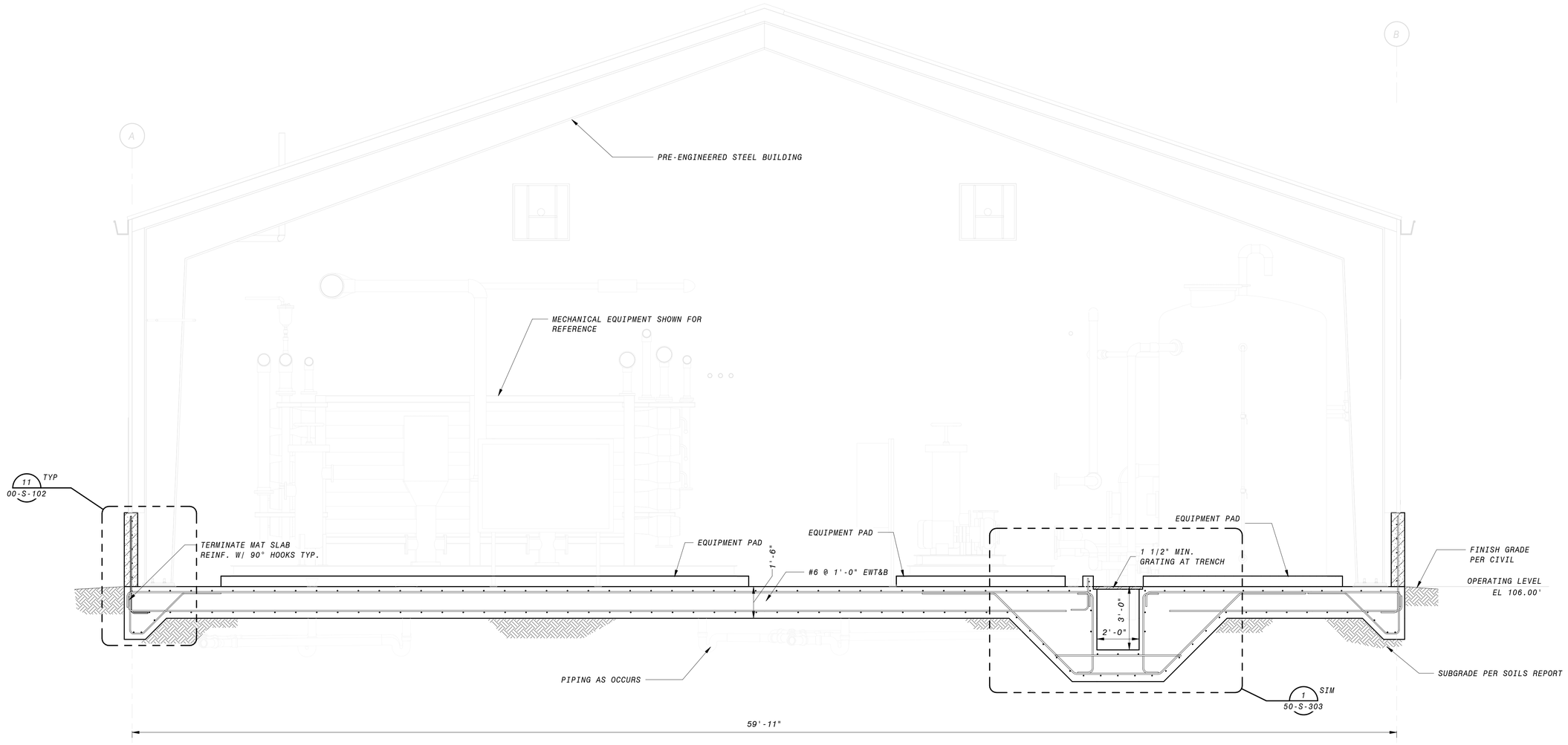

1 SECTION
50-S-101 3/8" = 1'-0"

GENERAL SECTION NOTES

1. FOR GENERAL STRUCTURAL NOTES, SEE SHEETS 00-S-002 AND STANDARD SPECIFICATIONS.
2. REINFORCEMENT CLEAR COVER TO BE 2" EF FOR WALLS, 2" AT TOP OF SLABS, AND 3" AT BOTTOM OF SLABS, TYP., UNO
3. ALL LAP SPLICES TO BE CLASS B PER DETAIL 1/00-S-101.
4. REFER TO MECHANICAL DRAWINGS FOR SIZE AND LOCATIONS OF PIPE PENETRATIONS AND WALL OPENINGS. SEE DETAIL 9/00-S-101 FOR TYPICAL REINFORCEMENT REQUIREMENTS. COORDINATE PIPE PENETRATION SEAL WITH MECHANICAL EOR (WHERE OCCURS).
5. SUBMIT EQUIPMENT WEIGHT FOR REVIEW PRIOR TO INSTALLATION. SEE DETAIL 1/00-S-105 FOR TYPICAL INTERIOR EQUIPMENT PADS AND DETAIL 10/00-S-105 FOR TYPICAL EXTERIOR EQUIPMENT PADS. LOCATION AND SIZE OF EQUIPMENT PADS TO BE COORDINATED WITH MECHANICAL/ELECTRICAL/PLUMBING DRAWINGS. EQUIPMENT ANCHORAGE PER PROJECT SPECIFICATIONS.
6. COORDINATE LOCATION AND DETAILING FOR ATTACHMENT OF MECHANICAL SUPPORTS WITH BUILDING MANUFACTURER AND MECHANICAL ENGINEER OF RECORD PRIOR TO INSTALLATION.
7. COORDINATE ALL INTERIOR WALLS WITH ARCHITECTURAL DRAWINGS. SEE SHEET 00-S-106 AND PROJECT SPECIFICATIONS FOR ADDITIONAL INFORMATION.
8. STEEL BAR GRATING. REFER TO METAL GRATINGS, SPECIFICATION 05 53 13 FOR ADDITIONAL INFORMATION.

12" 0' 1' 2' 3' 4' 5' 6' 7'
3/8" = 1'-0"

90% SUBMITTAL - NOT FOR CONSTRUCTION

NO.	BY	CHK	APP	DATE	REVISIONS AND RECORD OF USE

REGISTERED PROFESSIONAL ENGINEER
CHARLES R. ASHLEY JR.
S 5258
STRUCTURAL
STATE OF CALIFORNIA

Ashley & Vance ENGINEERING, INC
JOINT VENTURE
BLACK & VEATCH
FILANC

CITY OF MORRO BAY
FILANC BLACK & VEATCH DB PROPOSAL
WATER RECLAMATION FACILITY (WRF)

RO/UV BUILDING
STRUCTURAL
SECTION AND DETAIL

DESIGNED: M. MARSH
DETAILED: S. BENJAMIN
CHECKED: I. SHOEBRIDGE
APPROVED: C. ASHLEY
DATE: XX/XX/XXXX

0 1/2 1
IF THIS BAR DOES NOT MEASURE 1" THEN DRAWING IS NOT TO FULL SCALE

PROJECT NO.
81203

50-S-301
SHEET
OF XXX

PLOTTED: 3/24/2020 12:55:13 PM
D400530

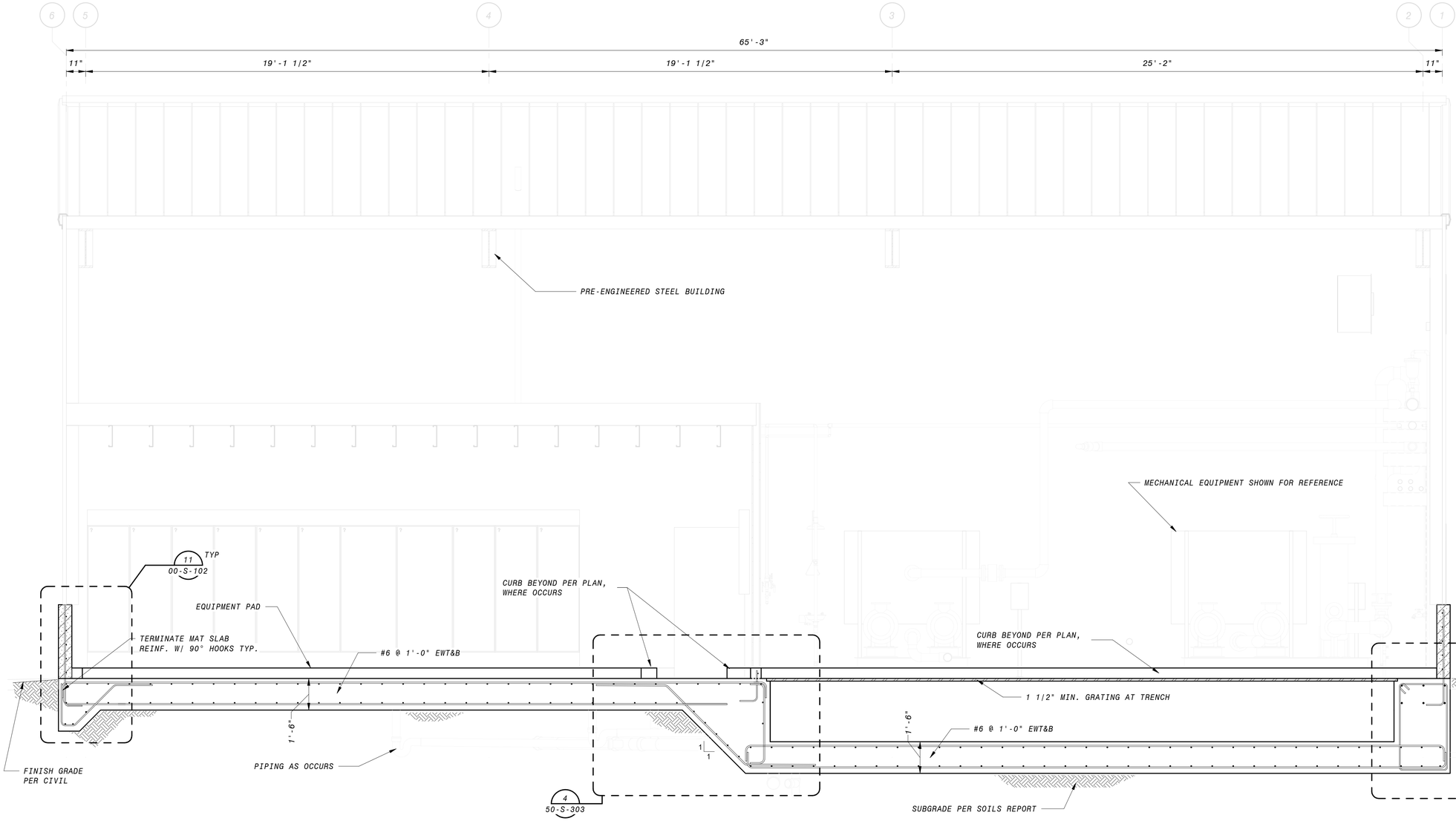

1 SECTION
50-S-101 3/8" = 1'-0"

GENERAL SECTION NOTES

1. FOR GENERAL STRUCTURAL NOTES, SEE SHEETS 00-S-002 AND STANDARD SPECIFICATIONS.
2. REINFORCEMENT CLEAR COVER TO BE 2" EF FOR WALLS, 2" AT TOP OF SLABS, AND 3" AT BOTTOM OF SLABS, TYP., UNO
3. ALL LAP SPLICES TO BE CLASS B PER DETAIL 1/00-S-101.
4. REFER TO MECHANICAL DRAWINGS FOR SIZE AND LOCATIONS OF PIPE PENETRATIONS AND WALL OPENINGS. SEE DETAIL 9/00-S-101 FOR TYPICAL REINFORCEMENT REQUIREMENTS. COORDINATE PIPE PENETRATION SEAL WITH MECHANICAL EOR (WHERE OCCURS).
5. SUBMIT EQUIPMENT WEIGHT FOR REVIEW PRIOR TO INSTALLATION. SEE DETAIL 1/00-S-105 FOR TYPICAL INTERIOR EQUIPMENT PADS AND DETAIL 10/00-S-105 FOR TYPICAL EXTERIOR EQUIPMENT PADS. LOCATION AND SIZE OF EQUIPMENT PADS TO BE COORDINATED WITH MECHANICAL/ELECTRICAL/PLUMBING DRAWINGS. EQUIPMENT ANCHORAGE PER PROJECT SPECIFICATIONS.
6. COORDINATE LOCATION AND DETAILING FOR ATTACHMENT OF MECHANICAL SUPPORTS WITH BUILDING MANUFACTURER AND MECHANICAL ENGINEER OF RECORD PRIOR TO INSTALLATION.
7. COORDINATE ALL INTERIOR WALLS WITH ARCHITECTURAL DRAWINGS. SEE SHEET 00-S-106 AND PROJECT SPECIFICATIONS FOR ADDITIONAL INFORMATION.
8. STEEL BAR GRATING. REFER TO METAL GRATINGS, SPECIFICATION 05 53 13 FOR ADDITIONAL INFORMATION.

12" 0' 1' 2' 3' 4' 5' 6' 7'
3/8" = 1'-0"

90% SUBMITTAL - NOT FOR CONSTRUCTION

NO.	BY	CHK	APP	DATE	REVISIONS AND RECORD OF USE

REGISTERED PROFESSIONAL ENGINEER
CHARLES R. ASHLEY JR.
S 5258
STRUCTURAL
STATE OF CALIFORNIA

Ashley&Vance ENGINEERING, INC
JOINT VENTURE
BLACK&VEATCH
FILANC

CITY OF MORRO BAY
FILANC BLACK & VEATCH DB PROPOSAL
WATER RECLAMATION FACILITY (WRF)

RO/UV BUILDING
STRUCTURAL
SECTION

DESIGNED: M. MARSH
DETAILED: S. BENJAMIN
CHECKED: I. SHOEBRIDGE
APPROVED: C. ASHLEY
DATE: XX/XX/XXXX

0 1/2 1
IF THIS BAR DOES NOT MEASURE 1" THEN DRAWING IS NOT TO FULL SCALE

PROJECT NO.
81203

50-S-302
SHEET
OF XXX

PLOTTED: 3/24/2020 12:55:14 PM
D400530

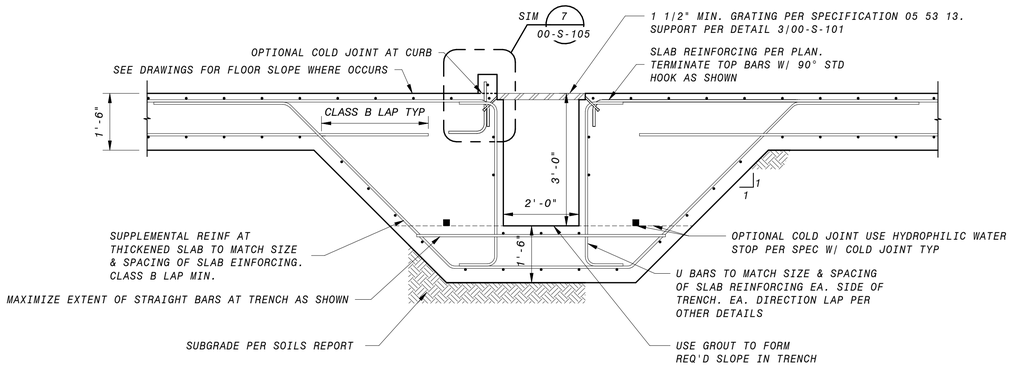

1 DRAIN TRENCH AT MAT SLAB
50-S-301 NO SCALE

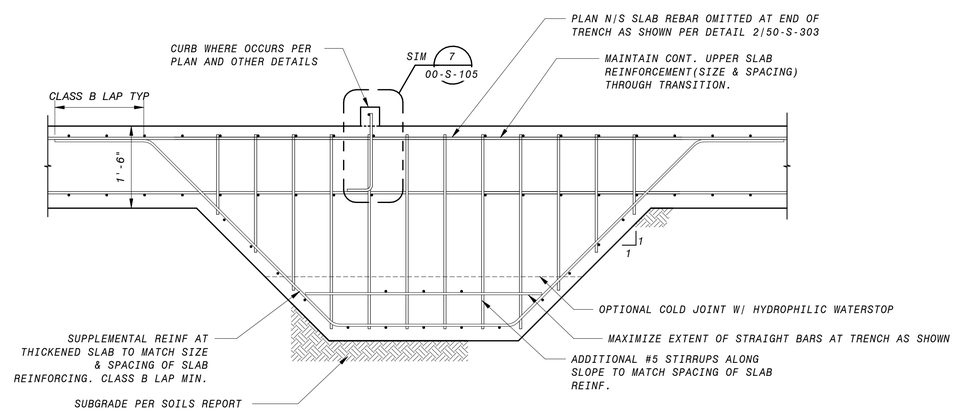

3 SECTION AT TRENCH END
NO SCALE

2 DRAIN TRENCH END
50-S-302 NO SCALE

4 DRAIN TRENCH TRANSITION
50-S-302 NO SCALE

90% SUBMITTAL - NOT FOR CONSTRUCTION

NO.	BY	CHK	APP	DATE	REVISIONS AND RECORD OF USE

REGISTERED PROFESSIONAL ENGINEER CHARLES R. ASHLEY JR. S 5258 STRUCTURAL STATE OF CALIFORNIA

Ashley & Vance ENGINEERING, INC

JOINT VENTURE BLACK & VEATCH FILANC

CITY OF MORRO BAY
FILANC BLACK & VEATCH DB PROPOSAL
WATER RECLAMATION FACILITY (WRF)

RO/UV BUILDING
STRUCTURAL
DETAILS

DESIGNED: M. MARSH
DETAILED: S. BENJAMIN
CHECKED: I. SHOEBRIDGE
APPROVED: C. ASHLEY
DATE: XX/XX/XXXX

0 1/2 1
IF THIS BAR DOES NOT MEASURE 1" THEN DRAWING IS NOT TO FULL SCALE

PROJECT NO. 81203

50-S-303
SHEET OF XXX

PLOTTED: 3/24/2020 12:55:15 PM
D400530

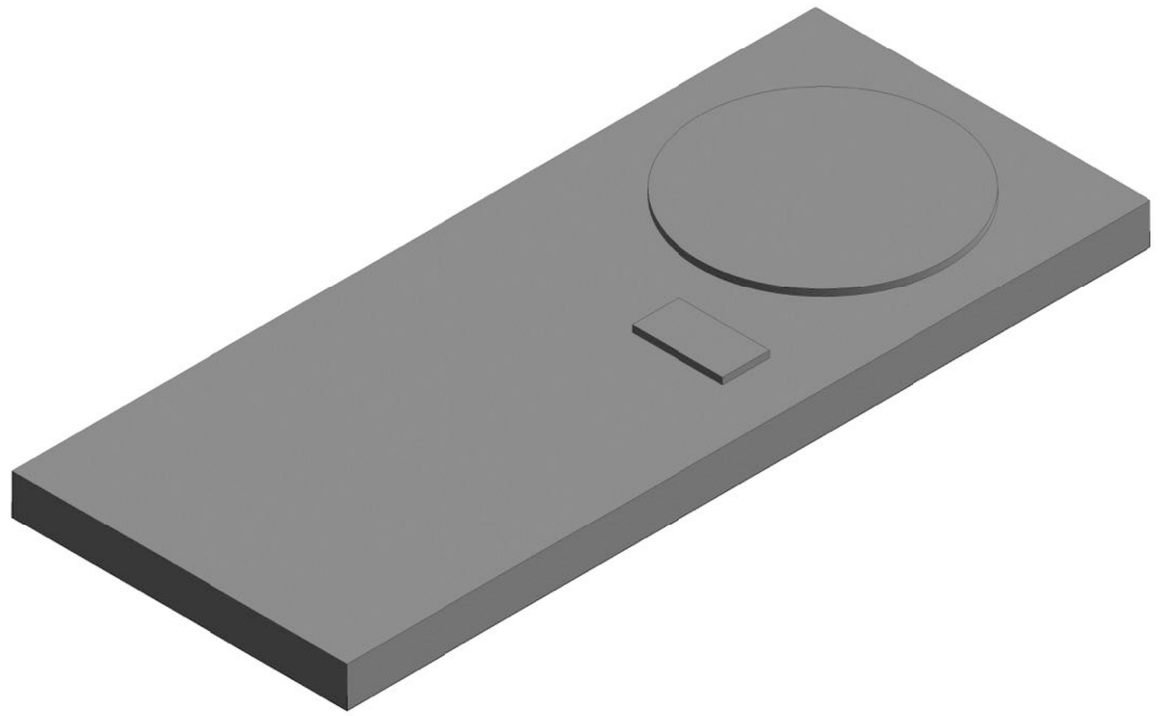

3D VIEW - EAST

90% SUBMITTAL- NOT FOR CONSTRUCTION

DATE	REVISIONS AND RECORD OF USE	NO.	BY	CHK	APP

REGISTERED PROFESSIONAL ENGINEER
CHARLES R. ASHLEY JR.
S 5258
STRUCTURAL
STATE OF CALIFORNIA

Ashley & Vance ENGINEERING, INC
JOINT VENTURE
FILANC
BLACK & VEATCH

CITY OF MORRO BAY
FILANC BLACK & VEATCH DB PROPOSAL
MORRO BAY WRF

PRODUCT WATER AREA
CALCITE CONTACTORS
STRUCTURAL
3D VIEW

DESIGNED: M. MARSH
DETAILED: S. BENJAMIN
CHECKED: I. SHOEBRIDGE
APPROVED: C. ASHLEY
DATE:

0 1/2 1
IF THIS BAR DOES NOT MEASURE 1" THEN DRAWING IS NOT TO FULL SCALE

PROJECT NO.
400530

61-S-001
SHEET
OF

PLOTTED: 3/24/2020 12:57:39 PM
D400530

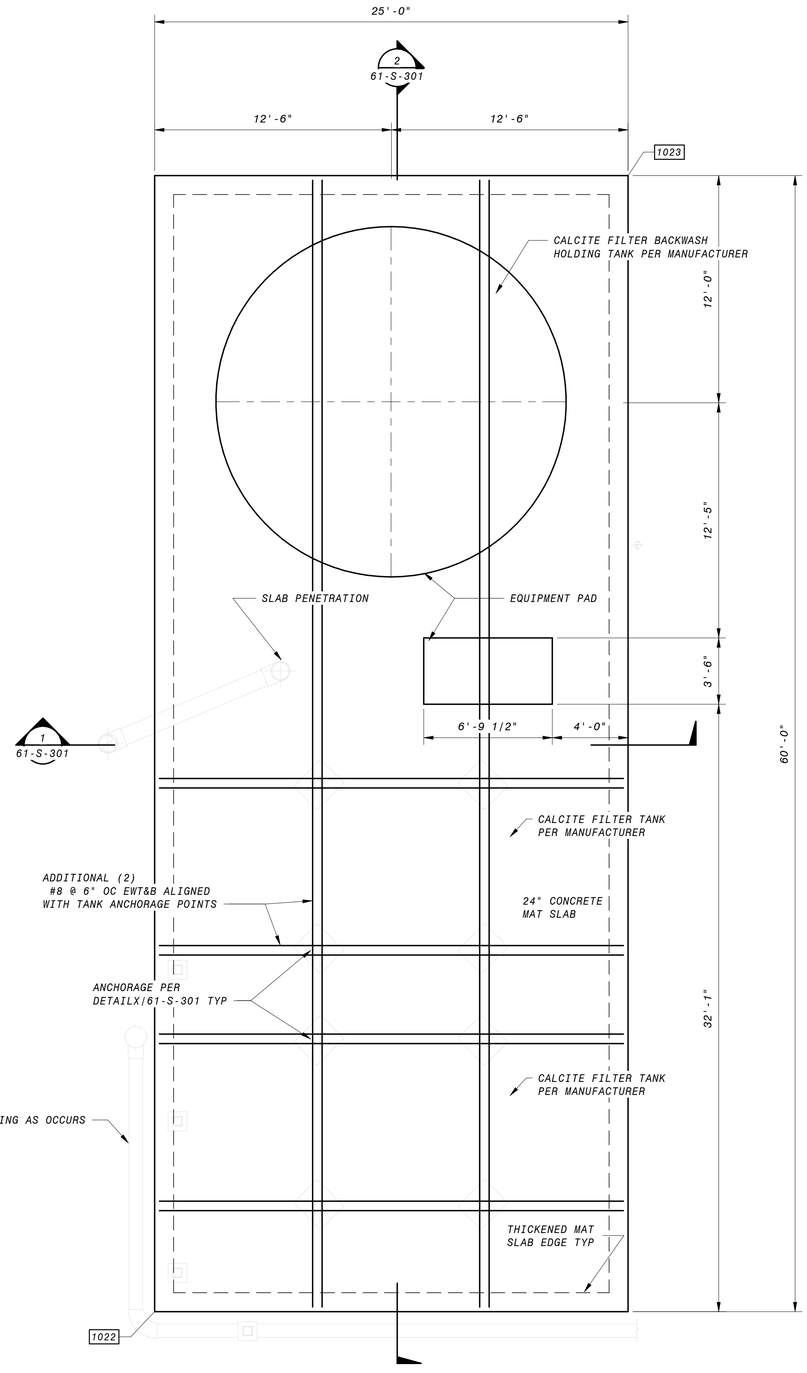

OPERATING FLOOR PLAN

1/4" = 1'-0"

GENERAL STRUCTURAL NOTES

1. PLEASE SEE SOILS REPORT FOR ADDITIONAL SPECIFICATIONS AND RECOMMENDATIONS. IT IS THE DESIGN BUILDER'S RESPONSIBILITY TO OBTAIN A COPY OF THE SOILS REPORT FROM THE OWNER OR OWNERS REPRESENTATIVE.
2. NOT USED
3. FOR GENERAL STRUCTURAL NOTES, SEE SHEETS 00-S-002 AND STANDARD SPECIFICATIONS.
4. VERIFY ALL DIMENSIONS PRIOR TO COMMENCEMENT OF CONSTRUCTION.
5. OUTSIDE LAYER OF MAT SLAB REINFORCEMENT TO BE PLACED IN THE LONG DIRECTION. INSIDE LAYER OF MAT SLAB REINFORCEMENT TO BE PLACED IN THE SHORT DIRECTION. TYPICAL, UNLESS NOTED OTHERWISE.
6. ALL LAP SPLICES TO BE CLASS B PER DETAIL 1/00-S-101
7. SUBMIT EQUIPMENT WEIGHT FOR REVIEW PRIOR TO INSTALLATION. SEE DETAIL 1/00-S-105 FOR TYPICAL EQUIPMENT PADS. LOCATION AND SIZE OF EQUIPMENT PADS TO BE COORDINATED WITH MECHANICAL/ELECTRICAL/PLUMBING DRAWINGS. EQUIPMENT ANCHORAGE PER PROJECT SPECIFICATIONS.
8. REFER TO MECHANICAL/ELECTRICAL/PLUMBING DRAWINGS FOR SIZE AND LOCATIONS OF PIPE PENETRATIONS. SEE DETAIL 9/00-S-101 FOR TYPICAL REINFORCEMENT REQUIREMENTS. COORDINATE PIPE PENETRATION SEAL WITH MECHANICAL ENGINEER OF RECORD.
9. SEE DETAIL 2/00-S-102 FOR TYP MAT SLAB ON GRADE.
10. ALL SLAB REINFORCEMENT MUST TERMINATE WITH A STANDARD 90° HOOK PER DETAIL 5/00-S-101.
11. FOR TYPICAL MAT SLAB EDGE, REFER TO DETAIL 13/00-S-102.
12. DIMENSIONS INDICATED ARE APPROXIMATE AND MAY VARY BASED ON MANUFACTURER REQUIREMENTS. COORDINATE AS REQUIRED.

4' 2' 0' 4' 8'

1/4" = 1'-0"

90% SUBMITTAL- NOT FOR CONSTRUCTION

NO.	BY	CHK	APP	DATE	REVISIONS AND RECORD OF USE

REGISTERED PROFESSIONAL ENGINEER
CHARLES R. ASHLEY JR.
S 5258
STRUCTURAL
STATE OF CALIFORNIA

Ashley & Vance ENGINEERING, INC
JOINT VENTURE
BLACK & VEATCH
FILANC

CITY OF MORRO BAY
FILANC BLACK & VEATCH DB PROPOSAL
MORRO BAY WRF

PRODUCT WATER AREA
CALCITE CONTACTORS
STRUCTURAL
PLAN

DESIGNED: M. MARSH
DETAILED: S. BENJAMIN
CHECKED: I. SHOEBRIDGE
APPROVED: C. ASHLEY
DATE:

0 1/2 1
IF THIS BAR DOES NOT MEASURE 1" THEN DRAWING IS NOT TO FULL SCALE

PROJECT NO.
400530

61-S-101
SHEET
OF

PLOTTED: 3/24/2020 12:57:40 PM
D400530

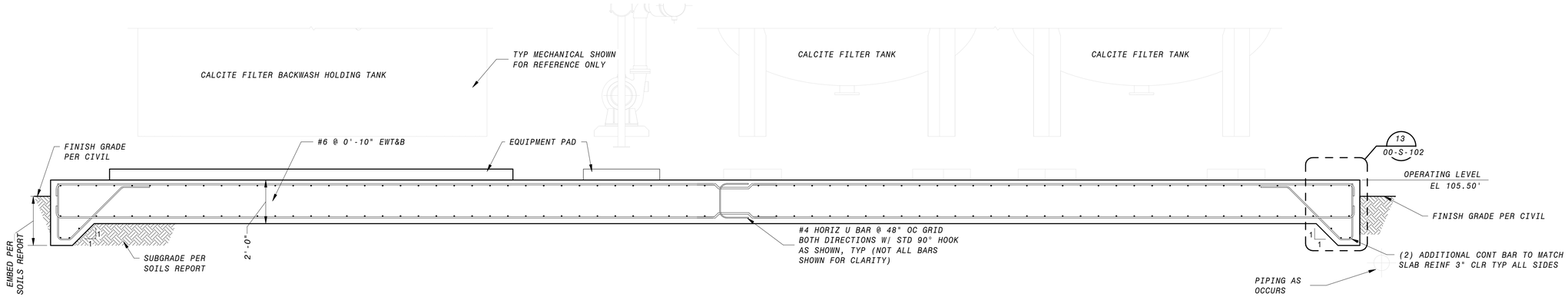

2 SECTION
61-S-101 3/8" = 1'-0"

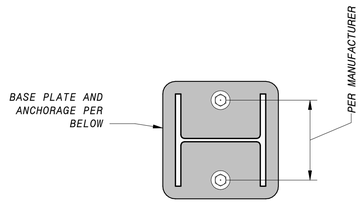

SECTION A-A

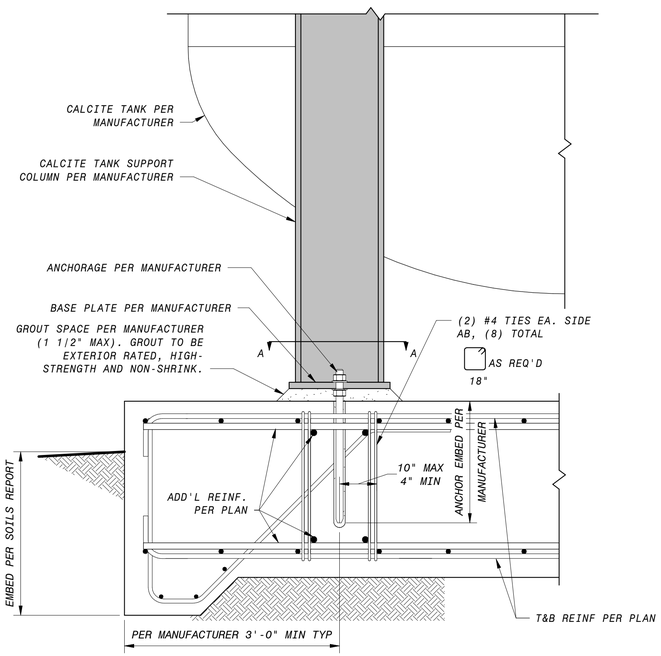

3 CALCITE FILTER TANK TO FOUNDATION
1" = 1'-0"

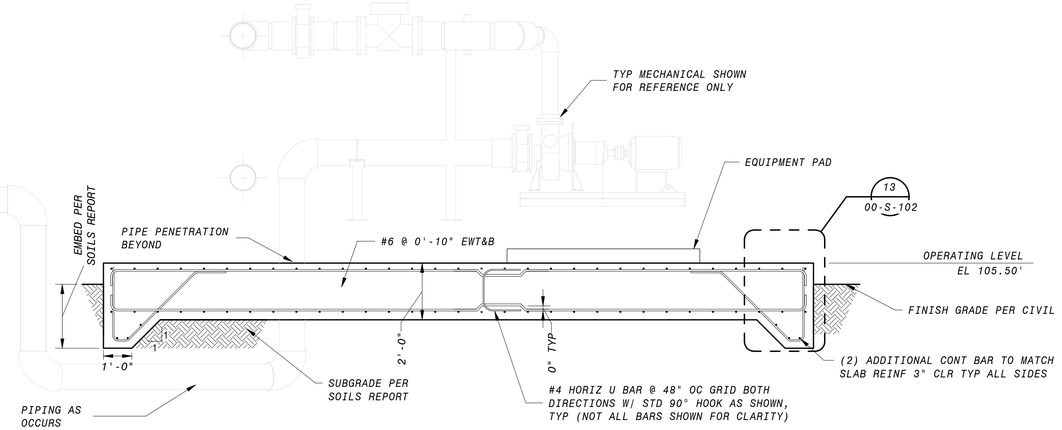

1 SECTION
61-S-101 3/8" = 1'-0"

GENERAL SECTION NOTES

1. FOR GENERAL STRUCTURAL NOTES, SEE SHEETS 00-S-002 AND STANDARD SPECIFICATIONS.
2. REINFORCEMENT CLEAR COVER TO BE 2" EF FOR WALLS, 2" AT TOP OF SLABS, AND 3" AT BOTTOM OF SLABS, TYP., UNO
3. ALL LAP SPLICES TO BE CLASS B PER DETAIL 1/00-S-101.
4. REFER TO MECHANICAL DRAWINGS FOR SIZE AND LOCATIONS OF PIPE PENETRATIONS.
   SEE DETAIL 9/00-S-101 FOR TYPICAL REINFORCEMENT REQUIREMENTS. COORDINATE PIPE PENETRATION SEAL WITH MECHANICAL EOR (WHERE OCCURS).
5. SUBMIT EQUIPMENT WEIGHT FOR REVIEW PRIOR TO INSTALLATION. SEE DETAIL 1/00-S-105 FOR TYPICAL EQUIPMENT PADS. LOCATION & SIZE OF EQUIPMENT PADS TO BE COORDINATED WITH MECHANICAL/ELECTRICAL/PLUMBING DRAWINGS. EQUIPMENT ANCHORAGE PER PROJECT SPECIFICATIONS.
6. ALL SLAB REINFORCEMENT MUST TERMINATE WITH A STANDARD 90° HOOK PER DETAIL 05/00-S-101.
7. FOR TYPICAL MAT SLAB EDGE, REFER TO DETAIL 13/00-S-102.

4' 2' 0' 4' 8'
1/4" = 1'-0"

90% SUBMITTAL- NOT FOR CONSTRUCTION

NO.	BY	CHK	APP	DATE	REVISIONS AND RECORD OF USE

REGISTERED PROFESSIONAL ENGINEER
CHARLES R. ASHLEY JR.
S 5258
STRUCTURAL
STATE OF CALIFORNIA

Ashley&Vance ENGINEERING, INC
BLACK&VEATCH
JOINT VENTURE
FILANC

CITY OF MORRO BAY
FILANC BLACK & VEATCH DB PROPOSAL
MORRO BAY WRF
PRODUCT WATER AREA
CALCITE CONTACTOR
STRUCTURAL
SECTIONS

DESIGNED: M. MARSH
DETAILED: S. BENJAMIN
CHECKED: I. SHOEBRIDGE
APPROVED: C. ASHLEY
DATE:

0 1/2 1
IF THIS BAR DOES NOT MEASURE 1" THEN DRAWING IS NOT TO FULL SCALE

PROJECT NO.
400530

61-S-301
SHEET
OF

PLOTTED: 3/24/2020 12:57:41 PM
D400530

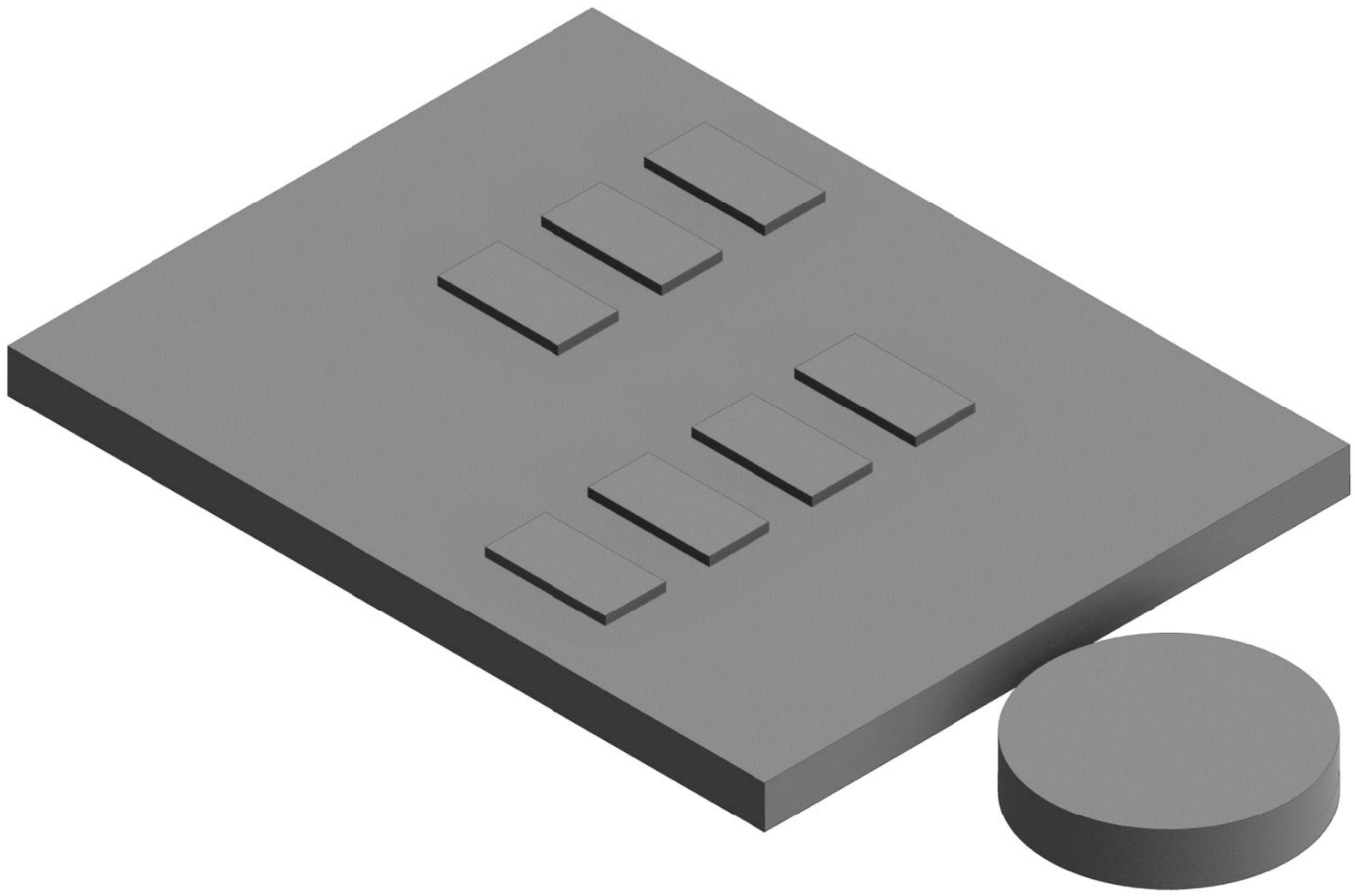

3D VIEW - EAST

90% SUBMITTAL- NOT FOR CONSTRUCTION

DATE	REVISIONS AND RECORD OF USE	NO.	BY	CHK	APP'D

REGISTERED PROFESSIONAL ENGINEER
CHARLES R. ASHLEY JR.
S 5258
STRUCTURAL
STATE OF CALIFORNIA

Ashley & Vance ENGINEERING, INC
JOINT VENTURE
FILANC
BLACK & VEATCH

CITY OF MORRO BAY
FILANC BLACK & VEATCH DB PROPOSAL
MORRO BAY WRF

PRODUCT WATER AREA
IPR AND OUTFALL PUMP STATION
STRUCTURAL
3D VIEW

DESIGNED: M. MARSH
DETAILED: S. BENJAMIN
CHECKED: I. SHOEBRIDGE
APPROVED: C. ASHLEY
DATE:

0 1/2 1
IF THIS BAR DOES NOT MEASURE 1" THEN DRAWING IS NOT TO FULL SCALE

PROJECT NO.
400530

63-S-001
SHEET
OF

PLOTTED: 3/24/2020 12:59:49 PM
D400530

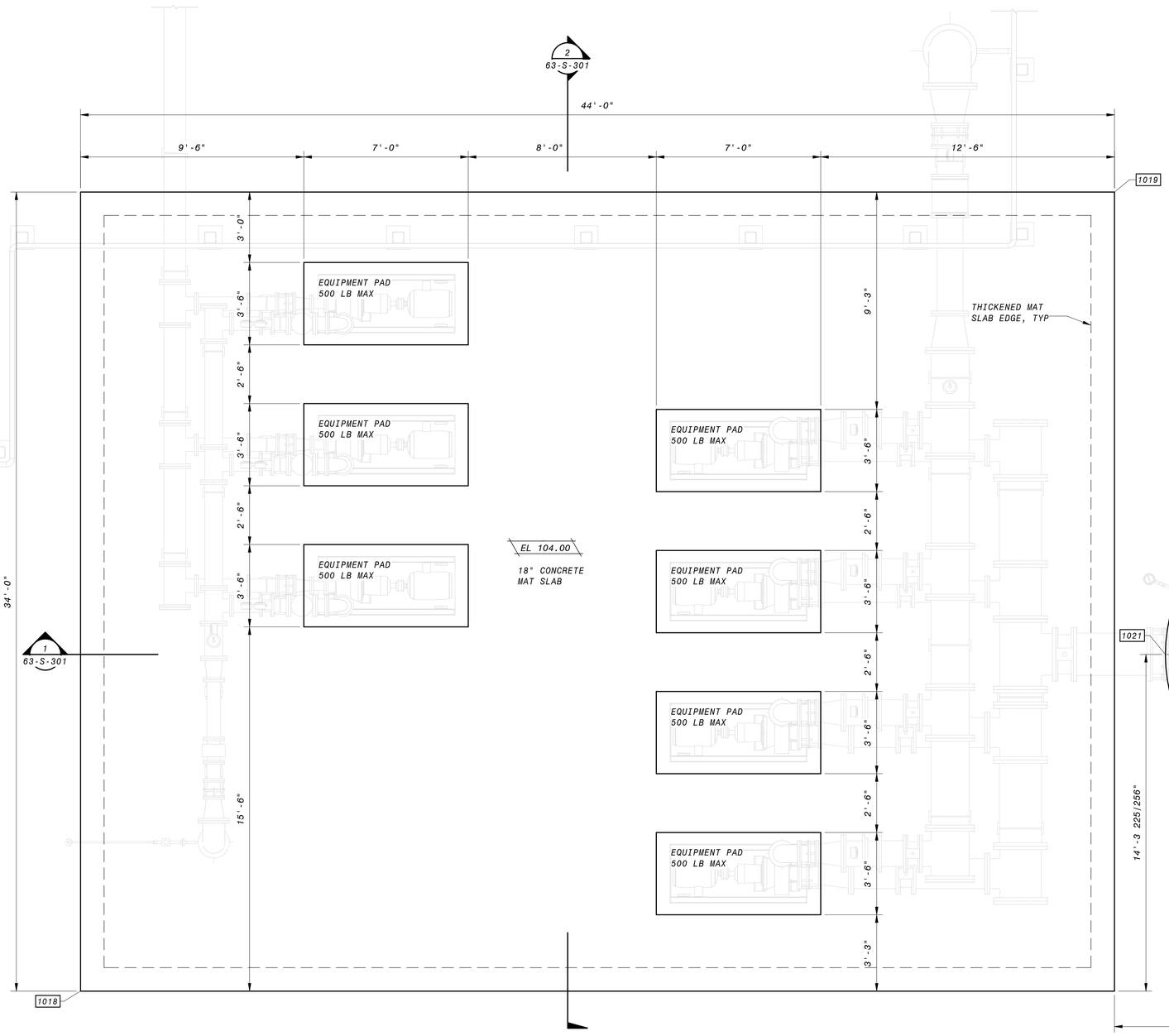

OPERATING FLOOR PLAN

3/8" = 1'-0"

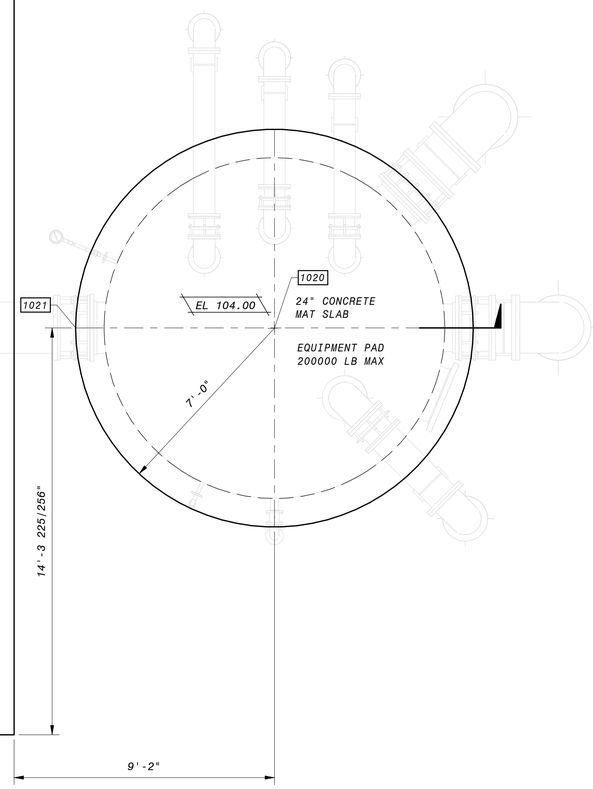

GENERAL STRUCTURAL NOTES

1. PLEASE SEE SOILS REPORT FOR ADDITIONAL SPECIFICATIONS AND RECOMMENDATIONS. IT IS THE DESIGN BUILDER'S RESPONSIBILITY TO OBTAIN A COPY OF THE SOILS REPORT FROM THE OWNER OR OWNERS REPRESENTATIVE.
2. NOT USED.
3. FOR GENERAL STRUCTURAL NOTES, SEE SHEETS 00-S-002 AND STANDARD SPECIFICATIONS.
4. VERIFY ALL DIMENSIONS PRIOR TO COMMENCEMENT OF CONSTRUCTION.
5. OUTSIDE LAYER OF MAT SLAB REINFORCEMENT TO BE PLACED IN THE LONG DIRECTION. INSIDE LAYER OF MAT SLAB REINFORCEMENT TO BE PLACED IN THE SHORT DIRECTION. TYPICAL, UNLESS NOTED OTHERWISE.
6. ALL LAP SPLICES TO BE CLASS B PER DETAIL 1/00-S-101
7. SUBMIT EQUIPMENT WEIGHT FOR REVIEW PRIOR TO INSTALLATION. SEE DETAIL 1/00-S-105 FOR TYPICAL EQUIPMENT PADS. LOCATION AND SIZE OF EQUIPMENT PADS TO BE COORDINATED WITH MECHANICAL/ELECTRICAL/PLUMBING DRAWINGS. EQUIPMENT ANCHORAGE PER PROJECT SPECIFICATIONS.
8. REFER TO MECHANICAL/ELECTRICAL/PLUMBING DRAWINGS FOR SIZE AND LOCATIONS OF PIPE PENETRATIONS. SEE DETAIL 9/00-S-101 FOR TYPICAL REINFORCEMENT REQUIREMENTS. COORDINATE PIPE PENETRATION SEAL WITH MECHANICAL ENGINEER OF RECORD.
9. SEE DETAIL 2/00-S-102 FOR TYP MAT SLAB ON GRADE.
10. ALL SLAB REINFORCEMENT MUST TERMINATE WITH A STANDARD 90° HOOK PER DETAIL 5/00-S-101.
11. FOR TYPICAL MAT SLAB EDGE, REFER TO DETAIL 13/00-S-102.
12. TANK FOUNDATION TO BE COORDINATED WITH TANK MANUFACTURER AND ANCHORAGE DESIGN PRIOR TO INSTALLATION

12" 0' 1' 2' 3' 4' 5' 6' 7'

3/8" = 1'-0"

90% SUBMITTAL- NOT FOR CONSTRUCTION

NO.	BY	CHK	APP	DATE	REVISIONS AND RECORD OF USE

REGISTERED PROFESSIONAL ENGINEER
CHARLES R. ASHLEY JR.
S 5258
STRUCTURAL
STATE OF CALIFORNIA

Ashley&Vance ENGINEERING, INC

JOINT VENTURE

BLACK&VEATCH

FILANC

CITY OF MORRO BAY
FILANC BLACK & VEATCH DB PROPOSAL
MORRO BAY WRF

PRODUCT WATER AREA
IPR AND OUTFALL PUMP STATION
STRUCTURAL
PLAN

DESIGNED: M. MARSH
DETAILED: S. BENJAMIN
CHECKED: I. SHOEBRIDGE
APPROVED: C. ASHLEY
DATE:

0 1/2 1

IF THIS BAR DOES NOT MEASURE 1" THEN DRAWING IS NOT TO FULL SCALE

PROJECT NO.
400530

63-S-101
SHEET
OF

PLOTTED: 3/24/2020 12:59:50 PM
D400530

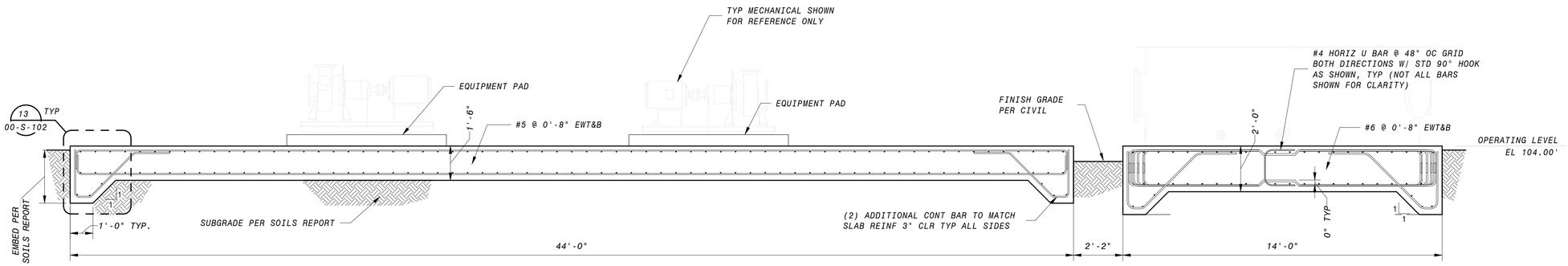

1 SECTION
63-S-101 3/8" = 1'-0"

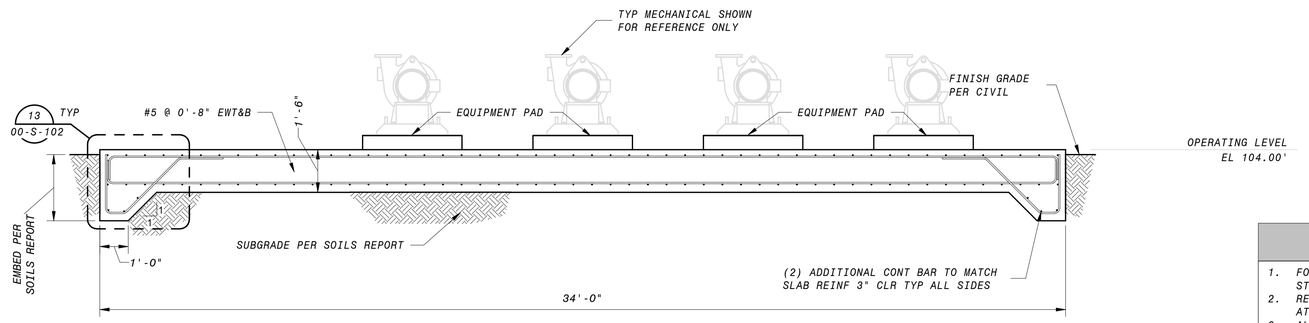

2 SECTION
63-S-101 3/8" = 1'-0"

GENERAL SECTION NOTES

1. FOR GENERAL STRUCTURAL NOTES, SEE SHEETS 00-S-002 AND STANDARD SPECIFICATIONS.
2. REINFORCEMENT CLEAR COVER TO BE 2" EF FOR WALLS, 2" AT TOP OF SLABS, AND 3" AT BOTTOM OF SLABS, TYP., UNO
3. ALL LAP SPLICES TO BE CLASS B PER DETAIL 1/00-S-101.
4. REFER TO MECHANICAL DRAWINGS FOR SIZE AND LOCATIONS OF PIPE PENETRATIONS.
   SEE DETAIL 9/00-S-101 FOR TYPICAL REINFORCEMENT REQUIREMENTS. COORDINATE PIPE PENETRATION SEAL WITH MECHANICAL EOR (WHERE OCCURS).
5. SUBMIT EQUIPMENT WEIGHT FOR REVIEW PRIOR TO INSTALLATION. SEE DETAIL 1/00-S-105 FOR TYPICAL EQUIPMENT PADS. LOCATION & SIZE OF EQUIPMENT PADS TO BE COORDINATED WITH MECHANICAL/ELECTRICAL/PLUMBING DRAWINGS. EQUIPMENT ANCHORAGE PER PROJECT SPECIFICATIONS.
6. ALL SLAB REINFORCEMENT MUST TERMINATE WITH A STANDARD 90° HOOK PER DETAIL 05/00-S-101.
7. FOR TYPICAL MAT SLAB EDGE, REFER TO DETAIL 13/00-S-102.

12" 0' 1' 2' 3' 4' 5' 6' 7'
3/8" = 1'-0"

90% SUBMITTAL- NOT FOR CONSTRUCTION

NO.	BY	CHK	APP	DATE	REVISIONS AND RECORD OF USE

REGISTERED PROFESSIONAL ENGINEER
CHARLES R. ASHLEY JR.
S 5258
STRUCTURAL
STATE OF CALIFORNIA

Ashley & Vance ENGINEERING, INC
JOINT VENTURE
BLACK & VEATCH
FILANC

CITY OF MORRO BAY
FILANC BLACK & VEATCH DB PROPOSAL
MORRO BAY WRF
PRODUCT WATER AREA
IPR AND OUTFALL PUMP STATION
STRUCTURAL
SECTIONS

DESIGNED: M. MARSH
DETAILED: S. BENJAMIN
CHECKED: I. SHOEBRIDGE
APPROVED: C. ASHLEY
DATE:

0 1/2 1
IF THIS BAR DOES NOT MEASURE 1" THEN DRAWING IS NOT TO FULL SCALE

PROJECT NO.
400530

63-S-301
SHEET
OF

PLOTTED: 3/24/2020 12:59:51 PM
D400530

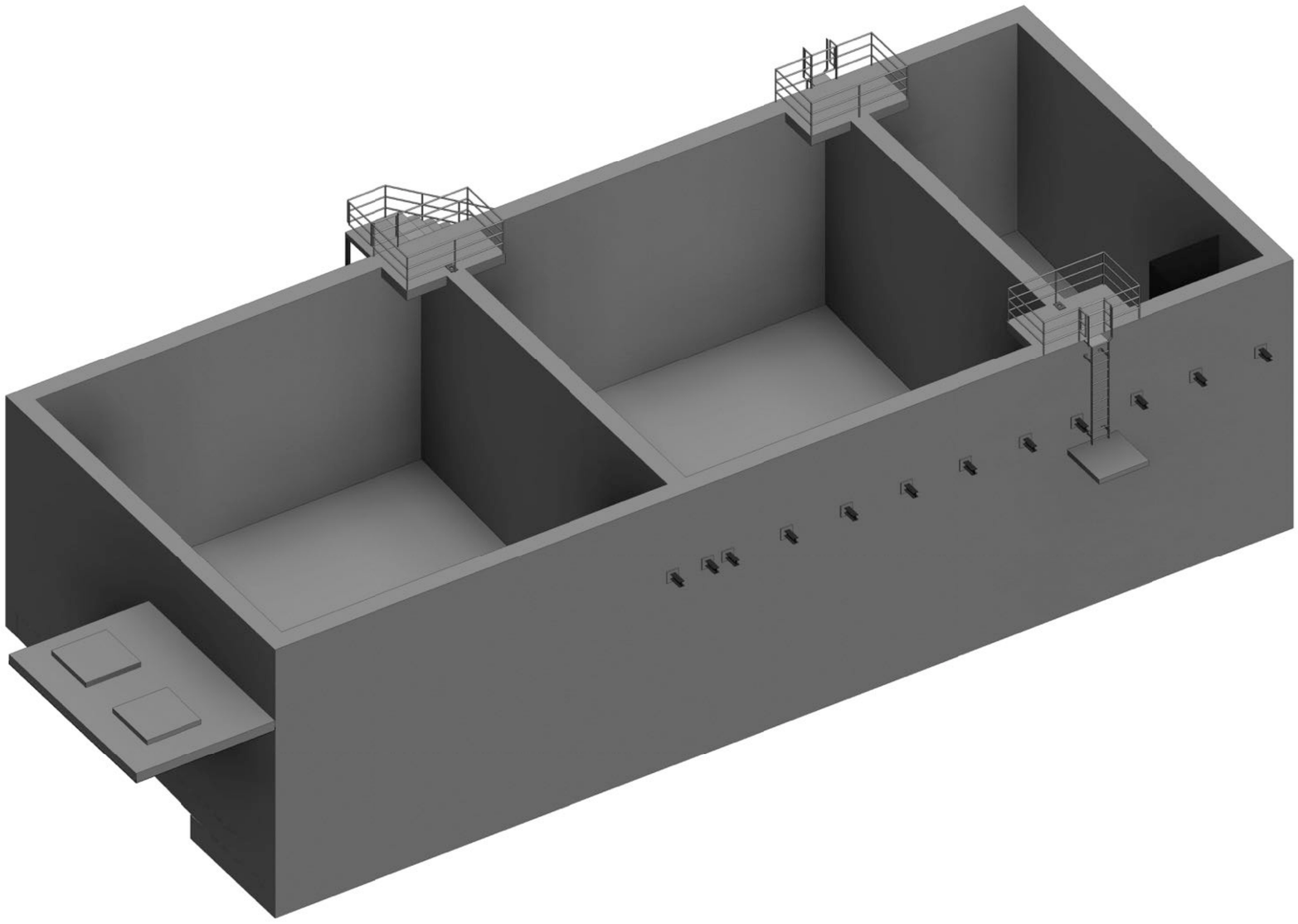

3D VIEW - WEST

90% SUBMITTAL - NOT FOR CONSTRUCTION

DATE	REVISIONS AND RECORD OF USE	NO.	BY	CHK	APP

REGISTERED PROFESSIONAL ENGINEER
CHARLES R. ASHLEY, JR.
S 5258
STRUCTURAL
STATE OF CALIFORNIA

Ashley & Vance ENGINEERING, INC
JOINT VENTURE
FILANC
BLACK & VEATCH

CITY OF MORRO BAY
FILANC BLACK & VEATCH DB PROPOSAL
RECLAMATION FACILITY (WRF)

SLUDGE HOLDING TANKS AND SAFE SETTLE TANK
STRUCTURAL
3D VIEW

DESIGNED: M. MARSH
DETAILED: S. BENJAMIN
CHECKED: I. SHOEBRIDGE
APPROVED: C. ASHLEY
DATE:

0 1/2 1
IF THIS BAR DOES NOT MEASURE 1" THEN DRAWING IS NOT TO FULL SCALE

PROJECT NO.
400530

71-S-001
SHEET
OF

PLOTTED: 3/24/2020 1:08:21 PM
D400530

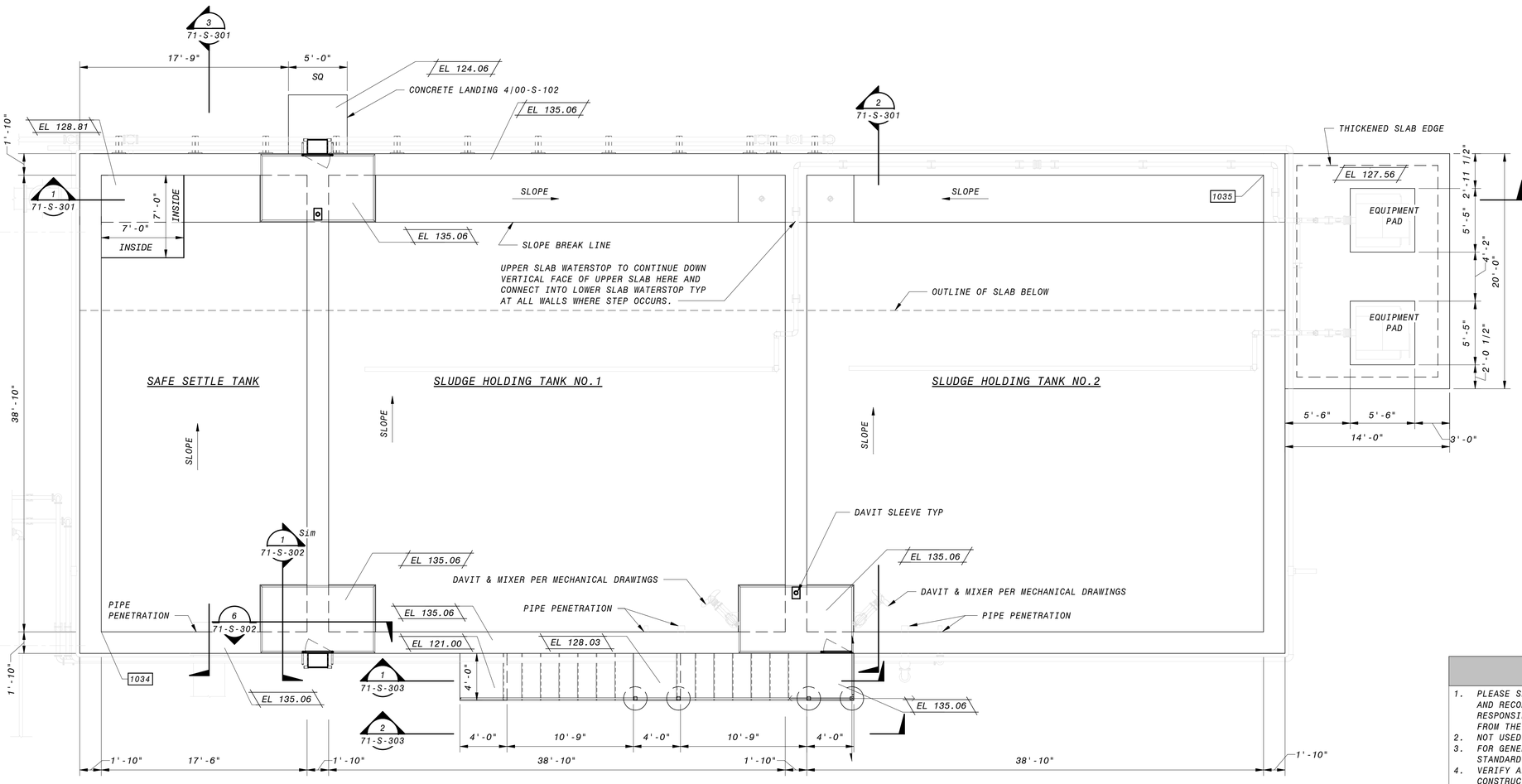

OPERATING FLOOR PLAN

3/16" = 1'-0"

GENERAL NOTES

1. PLEASE SEE SOILS REPORT FOR ADDITIONAL SPECIFICATIONS AND RECOMMENDATIONS. IT IS THE DESIGN BUILDER'S RESPONSIBILITY TO OBTAIN A COPY OF THE SOILS REPORT FROM THE OWNER OR OWNER'S REPRESENTATIVE.
2. NOT USED.
3. FOR GENERAL STRUCTURAL NOTES, SEE SHEETS 00-S-002 AND STANDARD SPECIFICATIONS.
4. VERIFY ALL DIMENSIONS PRIOR TO COMMENCEMENT OF CONSTRUCTION.
5. ALL LAP SPLICES TO BE CLASS B PER DETAIL 1/00-S-101
6. SEE DETAIL 2/00-S-102 FOR TYP MAT SLAB ON GRADE.
7. SUBMIT EQUIPMENT WEIGHT FOR REVIEW PRIOR TO INSTALLATION. SEE DETAIL 1/00-S-105 FOR TYPICAL EQUIPMENT PADS. LOCATION AND SIZE OF EQUIPMENT PADS TO BE COORDINATED WITH MECHANICAL/ ELECTRICAL/ PLUMBING DRAWINGS. EQUIPMENT ANCHORAGE PER PROJECT SPECIFICATIONS.
8. REFER TO MECHANICAL/ELECTRICAL/PLUMBING DRAWINGS FOR SIZE AND LOCATIONS OF PIPE PENETRATIONS AND WALL OPENINGS. SEE DETAIL 9/00-S-101 FOR TYPICAL REINFORCEMENT REQUIREMENTS. COORDINATE PIPE PENETRATION SEAL WITH MECHANICAL ENGINEER OF RECORD.
9. PROVIDE COMPLETE DESIGN PACKAGE FOR DAVIT AND MIXERS (INCLUDING ANCHORAGE)SIGNED BY A REGISTERED PROFESSIONAL ENGINEER FOR REVIEW. CARE TO BE TAKEN TO NOT HIT REINFORCEMENT.

6" 4' 2' 0' 5' 10'

3/16" = 1'-0"

90% SUBMITTAL - NOT FOR CONSTRUCTION

NO.	BY	CHK	APP	DATE	REVISIONS AND RECORD OF USE

REGISTERED PROFESSIONAL ENGINEER
CHARLES R. ASHLEY, JR.
S 5258
STRUCTURAL
STATE OF CALIFORNIA

Ashley & Vance ENGINEERING, INC
JOINT VENTURE
BLACK & VEATCH
FILANC

CITY OF MORRO BAY
FILANC BLACK & VEATCH DB PROPOSAL
RECLAMATION FACILITY (WRF)

SLUDGE HOLDING TANKS AND SAFE SETTLE TANK
STRUCTURAL
PLAN

DESIGNED: M. MARSH
DETAILED: S. BENJAMIN
CHECKED: I. SHOEBRIDGE
APPROVED: C. ASHLEY
DATE:

0 1/2 1
IF THIS BAR DOES NOT MEASURE 1" THEN DRAWING IS NOT TO FULL SCALE

PROJECT NO.
400530

71-S-101
SHEET
OF

PLOTTED: 3/24/2020 1:09:22 PM
D400530

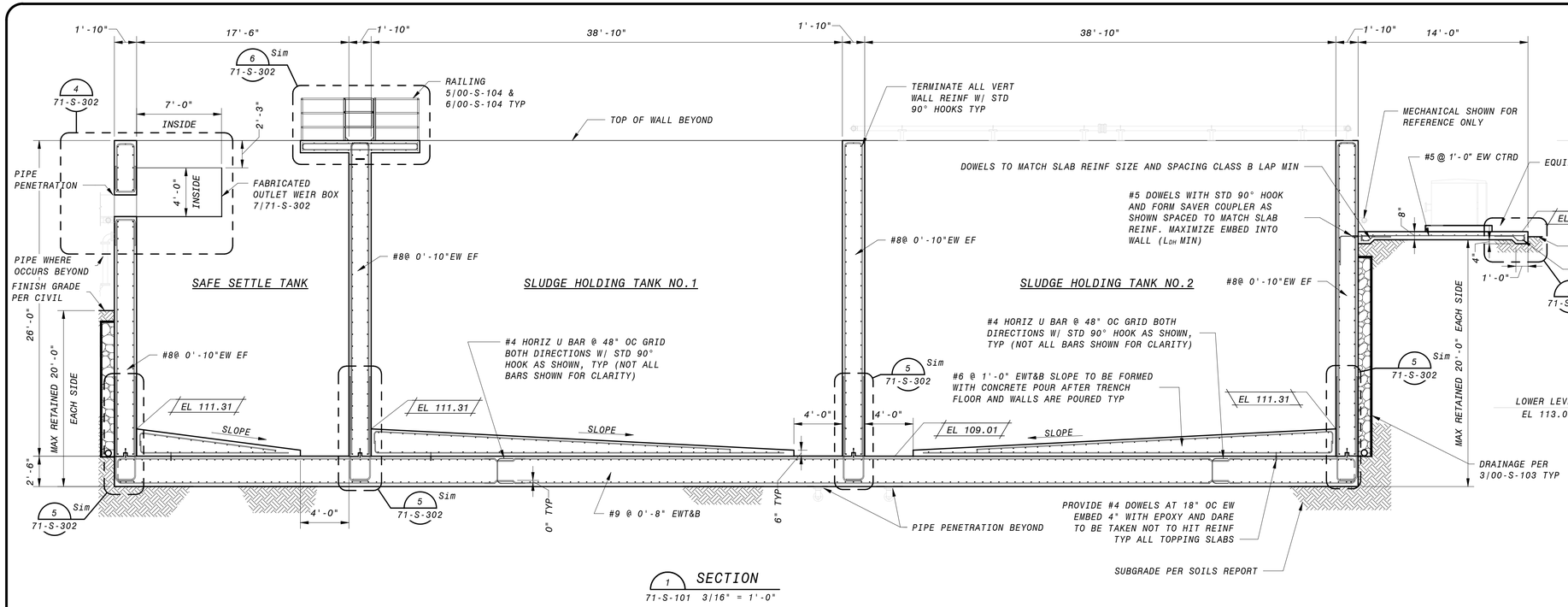

1 SECTION
71-S-101 3/16" = 1'-0"

GENERAL SECTION NOTES

1. FOR GENERAL STRUCTURAL NOTES, SEE SHEETS 00-S-002 AND STANDARD SPECIFICATIONS.
2. AT WALLS 12" THICK OR LESS, PROVIDE A 6" WATERSTOP, UNO. AT WALLS GREATER THAN 12" THICK, PROVIDE A 9" WATERSTOP, UNO. REFER TO DETAIL 2 ON SHEET 00-S-103.
3. REINFORCEMENT CLEAR COVER TO BE 2" EF FOR WALLS, 2" AT TOP OF SLABS, AND 3" AT BOTTOM OF SLABS, TYP., UNO
4. ALL LAP SPLICES TO BE CLASS B PER DETAIL 1/00-S-101.
5. REFER TO MECHANICAL/ ELECTRICAL/ PLUMBING DRAWINGS FOR SIZE AND LOCATIONS OF PIPE PENETRATIONS AND WALL OPENINGS. SEE DETAIL 9/00-S-101 FOR TYPICAL REINFORCEMENT REQUIREMENTS. COORDINATE PIPE PENETRATION SEAL WITH MECHANICAL ENGINEER OF RECORD.
6. SUBMIT EQUIPMENT WEIGHT FOR REVIEW PRIOR TO INSTALLATION. SEE DETAIL 1/00-S-105 FOR TYPICAL EQUIPMENT PADS. LOCATION AND SIZE OF EQUIPMENT PADS TO BE COORDINATED WITH MECHANICAL/ ELECTRICAL/ PLUMBING DRAWINGS. EQUIPMENT ANCHORAGE PER PROJECT SPECIFICATIONS.
7. PROVIDE COMPLETE DESIGN PACKAGE FOR DAVIT AND MIXERS.
8. ALL MECHANICAL SPLICES SHALL BE TYPE 2 AND DEVELOPE AT LEAST 1.25FY OF THE BAR.

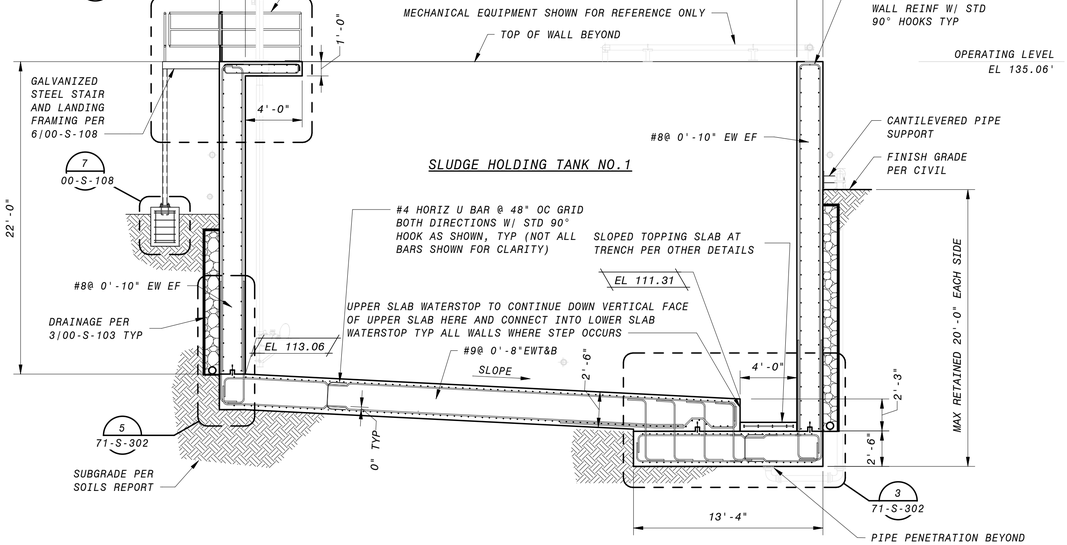

2 SECTION
71-S-101 3/16" = 1'-0"

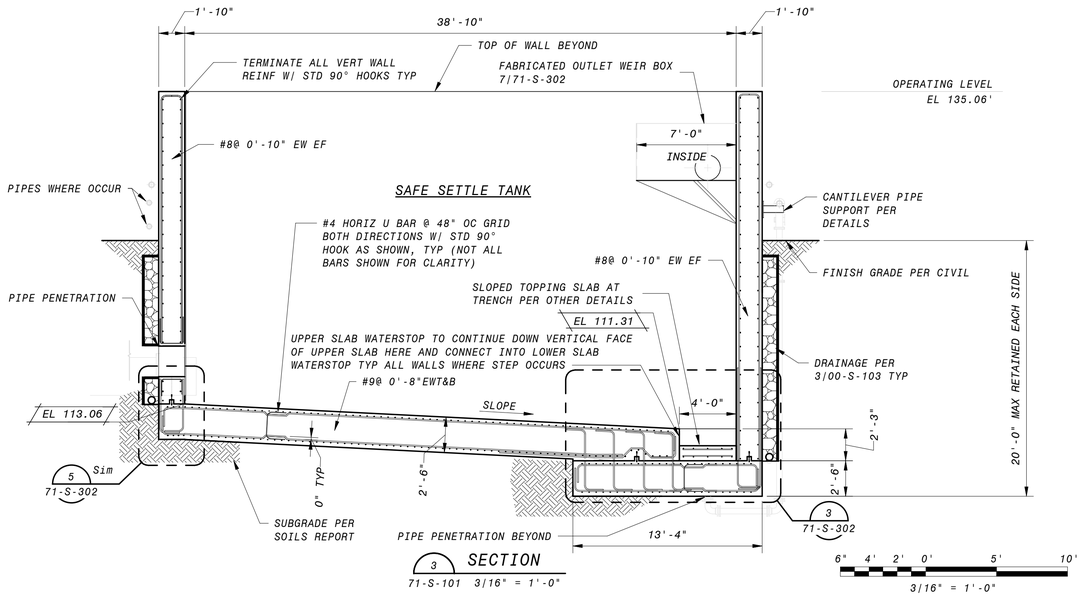

3 SECTION
71-S-101 3/16" = 1'-0"

6" 4' 2' 0' 5' 10'
3/16" = 1'-0"

90% SUBMITTAL - NOT FOR CONSTRUCTION

NO.	BY	CHK	APP	DATE	REVISIONS AND RECORD OF USE

REGISTERED PROFESSIONAL ENGINEER CHARLES R. ASHLEY JR. S 5258 STRUCTURAL STATE OF CALIFORNIA

Ashley & Vance ENGINEERING, INC
JOINT VENTURE
BLACK & VEATCH
FILANC

CITY OF MORRO BAY
FILANC BLACK & VEATCH DB PROPOSAL
RECLAMATION FACILITY (WRF)

SLUDGE HOLDING TANKS AND SAFE SETTLE
STRUCTURAL
SECTIONS & DETAILS 1

DESIGNED: M. MARSH
DETAILED: S. BENJAMIN
CHECKED: I. SHOEBRIDGE
APPROVED: C. ASHLEY
DATE:

0 1/2 1
IF THIS BAR DOES NOT MEASURE 1" THEN DRAWING IS NOT TO FULL SCALE

PROJECT NO. 400530

71-S-301
SHEET
OF

PLOTTED: 3/24/2020 1:08:23 PM
D400530

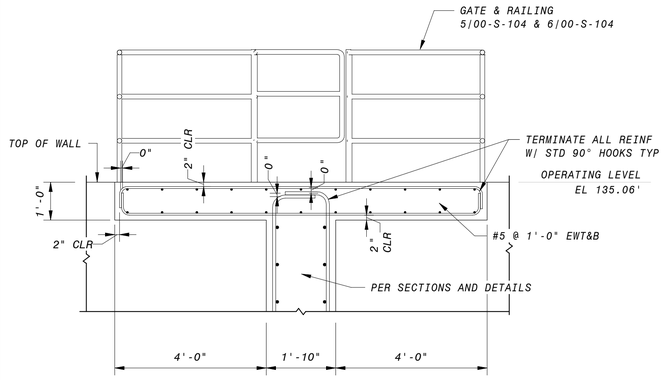

6 PLATFORM TO INTERIOR WALL
71-S-101 1/2" = 1'-0"

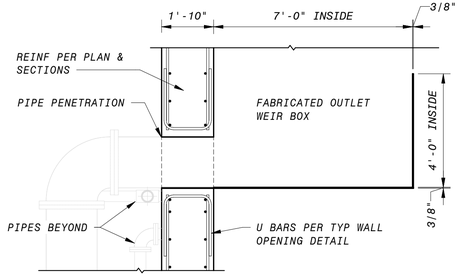

4 PIPE PENETRATION AT FABRICATED OUTLET BOX
71-S-301 3/8" = 1'-0"

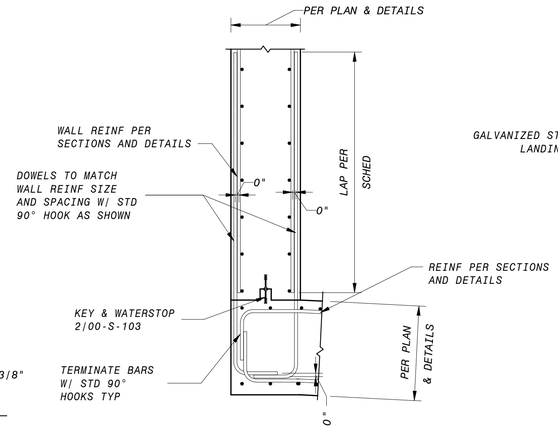

5 TYP WALL TO SLAB DETAIL
71-S-301 1/2" = 1'-0"

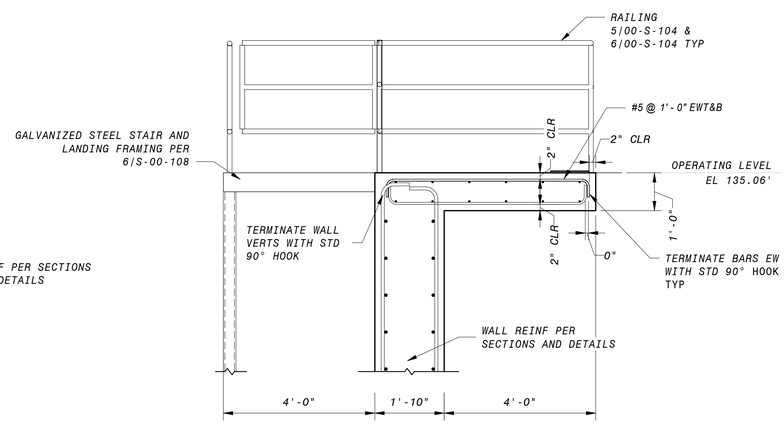

1 PLATFORM TO EXTERIOR WALL
71-S-101 1/2" = 1'-0"

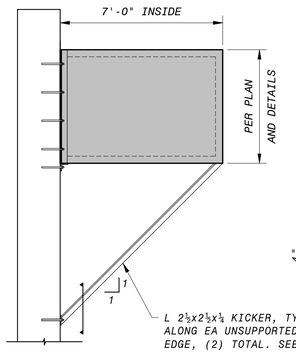

KICKER SUPPORT

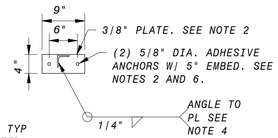

SECTION A-A

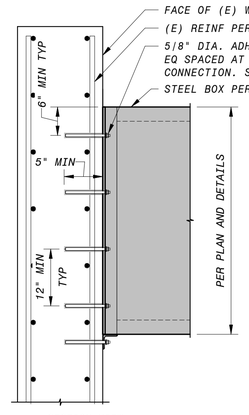

SECTION VIEW

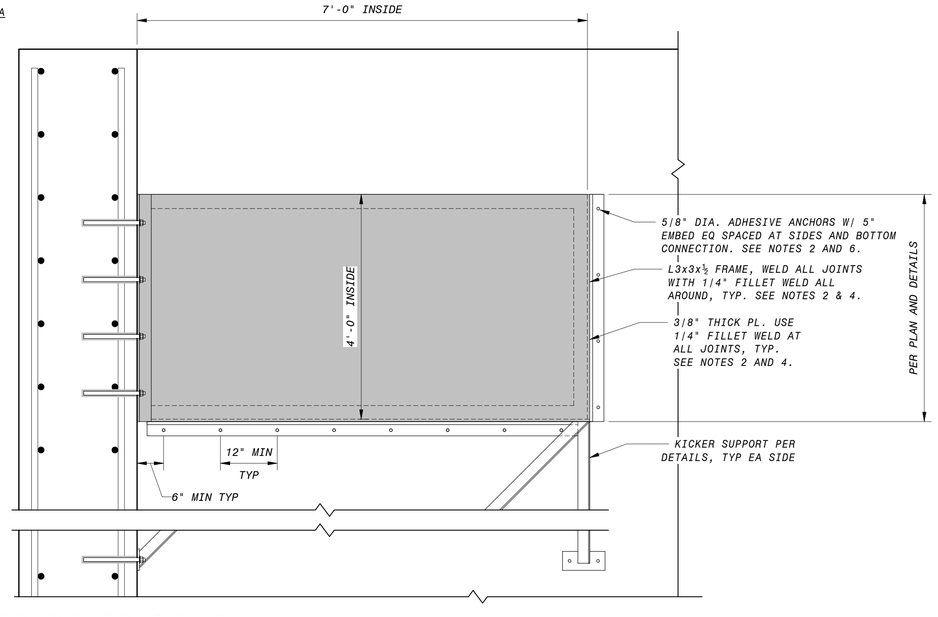

7 OUTLET WEIR BOX AT SLUDGE HOLDING TANKS
NO SCALE

NOTE:
1. CARE SHALL BE TAKEN TO AVOID EXISTING REINFORCEMENT.
2. ALL MATERIALS TO BE STAINLESS STEEL 316.
3. CONFORM TO THE REQUIREMENTS OF SPECIFICATION SECTION 05 81 00, ANCHORAGE IN CONCRETE AND MASONRY.
4. ALL EXPOSEDWELDS TO BE GROUND SMOOTH.
5. SPECIAL INSPECTION REQUIRED IN ACCORDANCE WITH THE CURRENT EDITION ON THE CALIFORNIA BUILDING CODE AND PRODUCT ESR REPORT.
6. ADHESIVE MAY BE HILTI HIT-RE 500 V3 OR SIMPMON SET-3G.

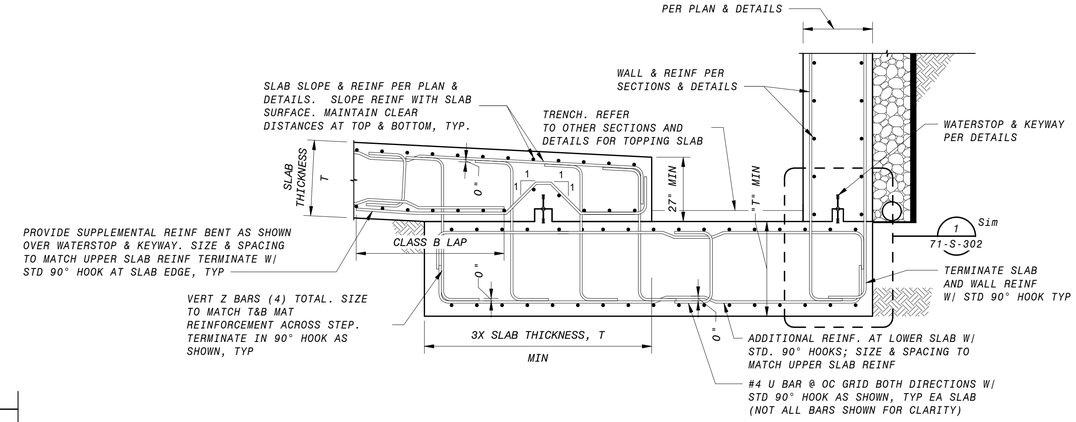

3 TRENCH DETAIL AT SLUGE TANKS
71-S-301 1" = 1'-0"
NO SCALE

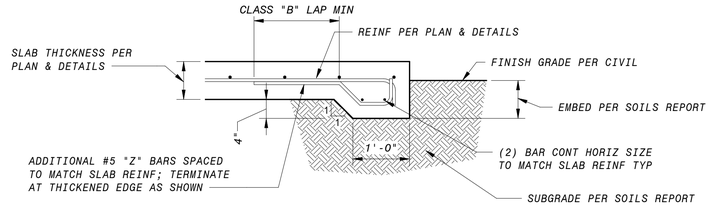

2 TYPICAL SLAB EDGE
71-S-301 3/4" = 1'-0"

GENERAL SECTION NOTES

1. FOR GENERAL STRUCTURAL NOTES, SEE SHEET 00-S-002 AND STANDARD SPECIFICATIONS.
2. AT WALLS 12" THICK OR LESS, PROVIDE A 6" WATERSTOP, UNO. AT WALLS GREATER THAN 12" THICK, PROVIDE A 9" WATERSTOP, UNO. REFER TO DETAIL 2 ON SHEET 00-S-103.
3. REINFORCEMENT CLEAR COVER TO BE 2" EF FOR WALLS, 2" AT TOP OF SLABS, AND 3" AT BOTTOM OF SLABS, TYP.,UNO
4. ALL LAP SPLICES TO BE CLASS B PER DETAIL 1/00-S-101.
5. REFER TO MECHANICAL DRAWINGS FOR SIZE AND LOCATIONS OF PIPE PENETRATIONS AND WALL OPENINGS. SEE DETAIL 9/00-S-101 FOR TYPICAL REINFORCEMENT REQUIREMENTS. COORDINATE PIPE PENETRATION SEAL WITH EOR (WHERE OCCURS).

90% SUBMITTAL - NOT FOR CONSTRUCTION

NO.	BY	CHK APP	DATE	REVISIONS AND RECORD OF USE

REGISTERED PROFESSIONAL ENGINEER
CHARLES R. ASHLEY JR.
S 5258
STRUCTURAL
STATE OF CALIFORNIA

Ashley & Vance ENGINEERING, INC
JOINT VENTURE
BLACK & VEATCH
FILANC

CITY OF MORRO BAY
FILANC BLACK & VEATCH DB PROPOSAL
RECLAMATION FACILITY (WRF)

SLUDGE HOLDING TANKS AND SAFE SETTLE
STRUCTURAL
SECTIONS & DETAILS 2

DESIGNED: M. MARSH
DETAILED: S. BENJAMIN
CHECKED: I. SHOEBRIDGE
APPROVED: C. ASHLEY
DATE:

0 1/2 1
IF THIS BAR DOES NOT MEASURE 1" THEN DRAWING IS NOT TO FULL SCALE

PROJECT NO.
400530

71-S-302
SHEET
OF

PLOTTED: 3/24/2020 1:09:23 PM
D400530

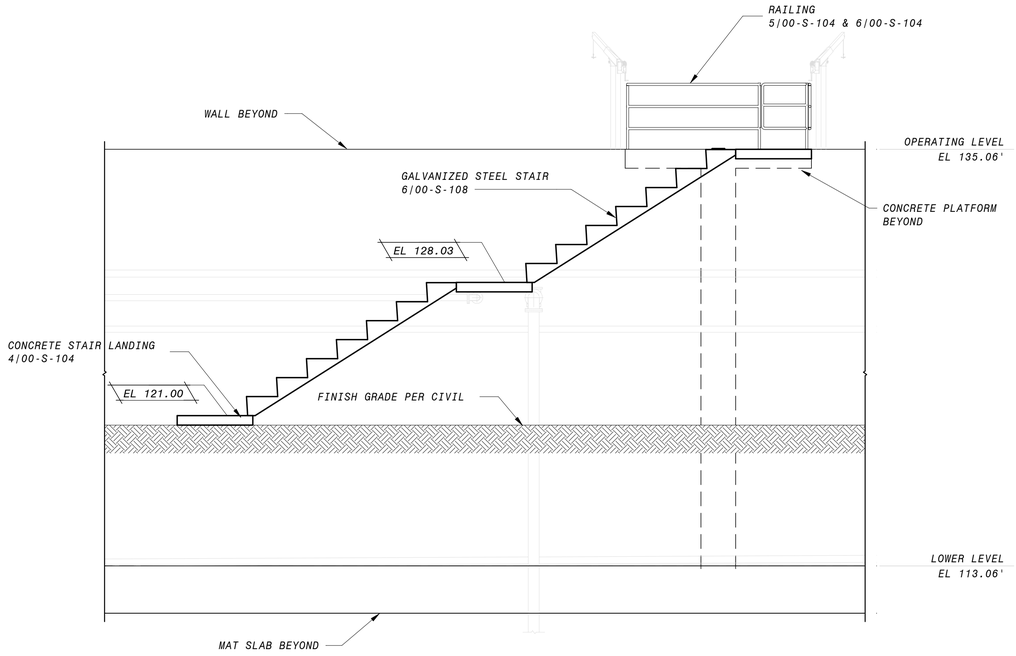

1 SECTION
71-S-101 1/4" = 1'-0"

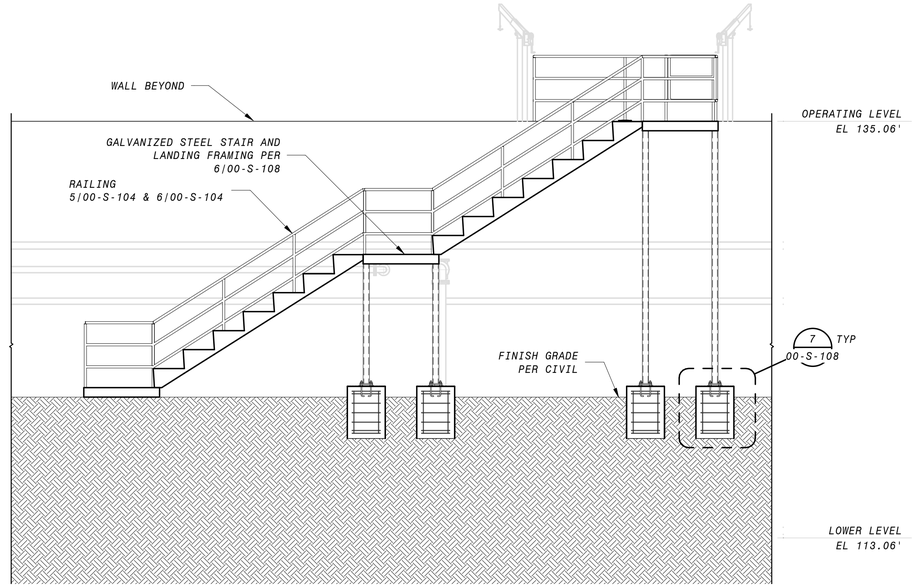

2 SECTION
71-S-101 1/4" = 1'-0"

90% SUBMITTAL - NOT FOR CONSTRUCTION

NO.	BY	CHK	APP	DATE	REVISIONS AND RECORD OF USE

REGISTERED PROFESSIONAL ENGINEER
CHARLES R. ASHLEY JR.
S 5258
STRUCTURAL
STATE OF CALIFORNIA

Ashley & Vance ENGINEERING, INC
JOINT VENTURE
BLACK & VEATCH
FILANC

CITY OF MORRO BAY
FILANC BLACK & VEATCH DB PROPOSAL
RECLAMATION FACILITY (WRF)

SLUDGE HOLDING TANKS AND SAFE SETTLE
STRUCTURAL
SECTIONS & DETAILS 3

DESIGNED: M. MARSH
DETAILED: S. BENJAMIN
CHECKED: I. SHOEBRIDGE
APPROVED: C. ASHLEY
DATE:

0 1/2 1
IF THIS BAR DOES NOT MEASURE 1" THEN DRAWING IS NOT TO FULL SCALE

PROJECT NO.
400530

71-S-303
SHEET
OF

PLOTTED: 3/24/2020 1:08:23 PM
D400530

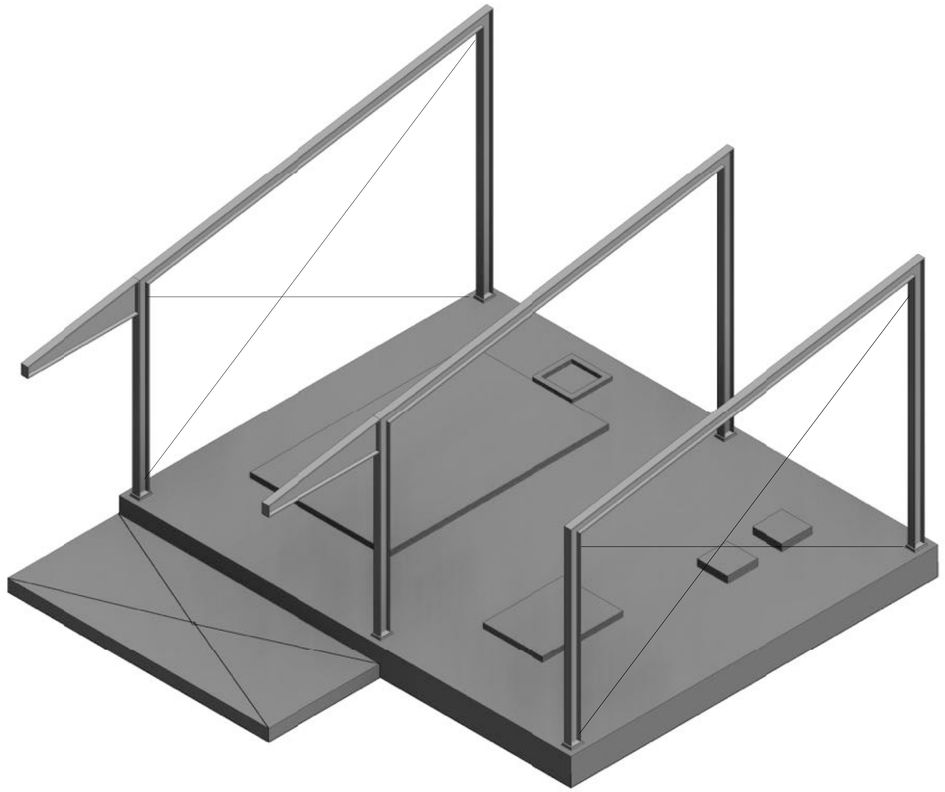

3D VIEW - NORTH

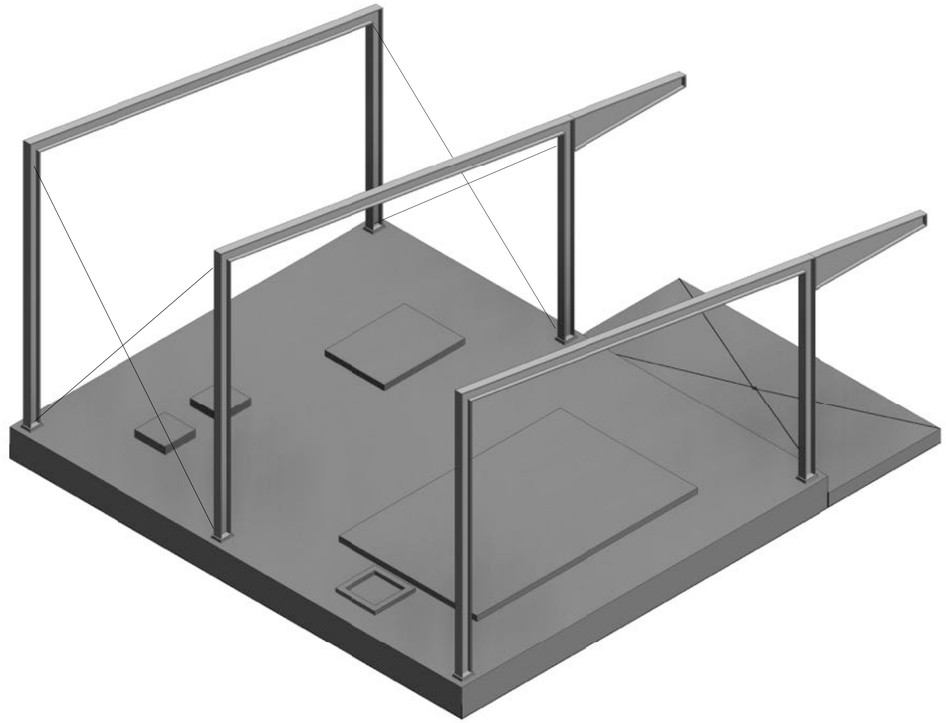

3D VIEW - SOUTH

90% SUBMITTAL - NOT FOR CONSTRUCTION

DATE	REVISIONS AND RECORD OF USE	NO.	BY	CHK	APP'D

REGISTERED PROFESSIONAL ENGINEER
CHARLES R. ASHLEY, JR.
S 5258
STRUCTURAL
STATE OF CALIFORNIA

Ashley & Vance ENGINEERING, INC
JOINT VENTURE
FILANC
BLACK & VEATCH

CITY OF MORRO BAY
FILANC BLACK & VEATCH DB PROPOSAL
RECLAMATION FACILITY (WRF)

RESIDUALS AREA - DEWATERING FACILITY
STRUCTURAL
3D VIEWS

DESIGNED: M. MARSH
DETAILED: S. BENJAMIN
CHECKED: I. SHOEBRIDGE
APPROVED: C. ASHLEY
DATE:

0 1/2 1
IF THIS BAR DOES NOT MEASURE 1" THEN DRAWING IS NOT TO FULL SCALE

PROJECT NO.
400530

72-S-001
SHEET
OF

PLOTTED: 3|24|2020 1:13:10 PM
D400530

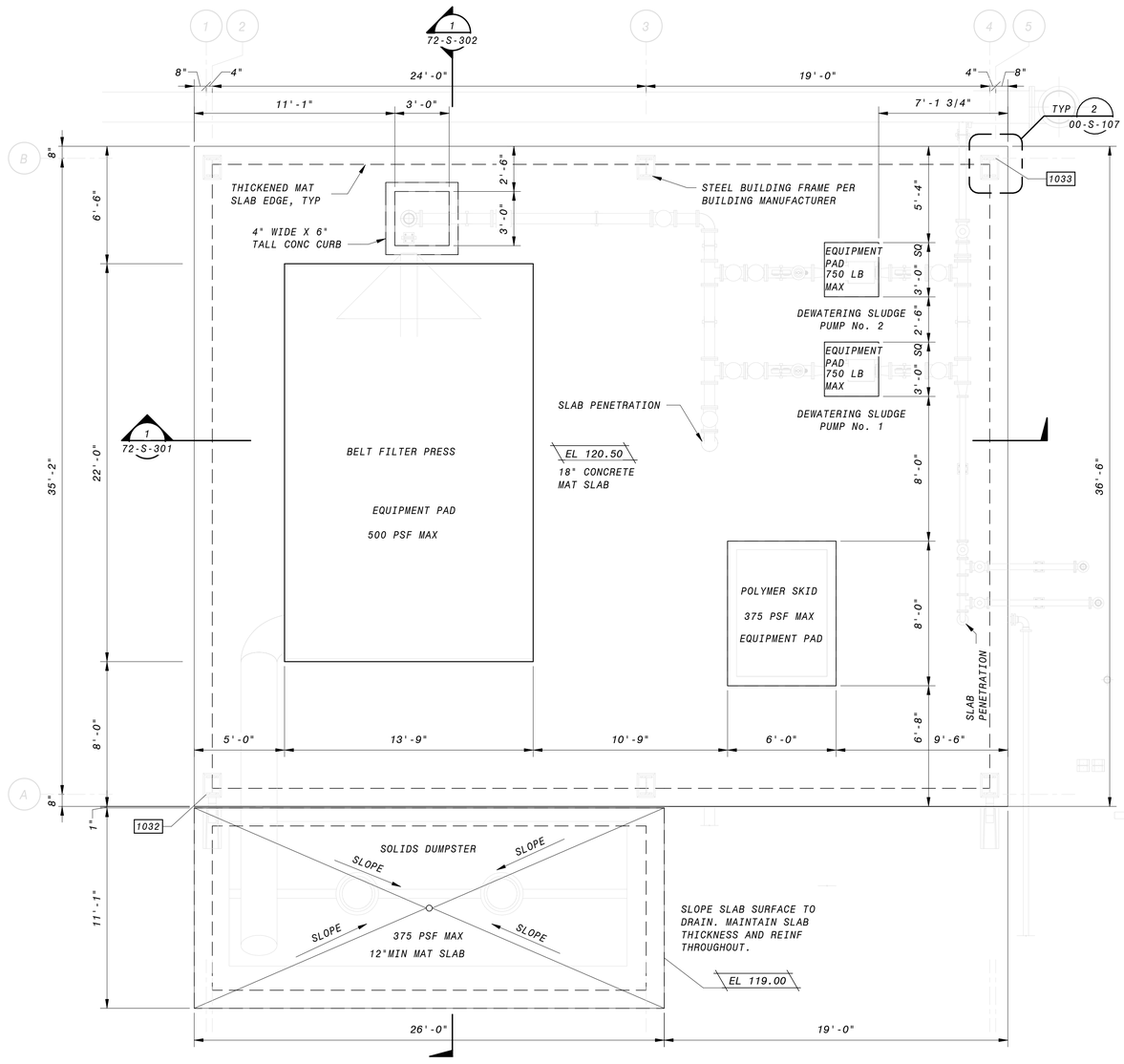

OPERATING FLOOR PLAN

1/4" = 1'-0"

NOTES:

1. DESIGN AND DRAWINGS FOR STEEL FRAME PRE-ENGINEERED METAL BUILDING TO BE PROVIDED BY BUILDING MFR. SEE SPECIFICATIONS FOR DESIGN CRITERIA.
2. FOUNDATION DESIGN HAS BEEN BASED ON THE FOLLOWING FRAME REACTIONS, ASSUMING A PINNED COLUMN BASE:
3. FRAME REACTIONS INCLUDE BOTH PRINCIPLE DIRECTIONS AND ORTHOGONAL COMBINATION EFFECTS.

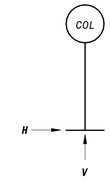

LOAD	VERTICAL V (K)	HORIZONTAL H (K)
DEAD	10.5	1.0
ROOF LIVE	13.4	1.3
SEISMIC	2.9	3.1
WIND (MAX)	35.3	2.7
WIND (MIN)	-35.3	-3.9

GENERAL NOTES

1. PLEASE SEE SOILS REPORT FOR ADDITIONAL SPECIFICATIONS AND RECOMMENDATIONS. IT IS THE DESIGN-BUILDER'S RESPONSIBILITY TO OBTAIN A COPY OF THE SOILS REPORT FROM THE OWNER OR OWNERS REPRESENTATIVE.
2. NOT USED.
3. FOR GENERAL STRUCTURAL NOTES, SEE SHEETS 00-S-002 AND STANDARD SPECIFICATIONS.
4. VERIFY ALL DIMENSIONS PRIOR TO COMMENCEMENT OF CONSTRUCTION.
5. SEE DETAIL 2/00-S-102 FOR TYP MAT SLAB ON GRADE.
6. ALL LAP SPLICES TO BE CLASS B PER DETAIL 1/00-S-101
7. SUBMIT EQUIPMENT WEIGHT FOR REVIEW PRIOR TO INSTALLATION. SEE DETAIL 1/00-S-105 FOR TYPICAL EQUIPMENT PADS. LOCATION AND SIZE OF EQUIPMENT PADS TO BE COORDINATED WITH MECHANICAL/ELECTRICAL/PLUMBING DRAWINGS. EQUIPMENT ANCHORAGE PER PROJECT SPECIFICATIONS.
8. REFER TO MECHANICAL/ELECTRICAL/PLUMBING DRAWINGS FOR SIZE AND LOCATIONS OF PIPE PENETRATIONS. SEE DETAIL 9/00-S-101 FOR TYPICAL REINFORCEMENT REQUIREMENTS. COORDINATE PIPE PENETRATION SEAL WITH MECHANICAL ENGINEER OF RECORD.
9. COORDINATE LOCATION AND DETAILING FOR ATTACHMENT OF MECHANICAL SUPPORTS WITH BUILDING MANUFACTURER AND MECHANICAL ENGINEER OF RECORD PRIOR TO INSTALLATION.
10. FOR TYPICAL MAT SLAB EDGE, REFER TO DETAIL 13/00-S-102.
11. LAYOUT SHOWN IS APPROXIMATE AND MAY VARY DEPENDING ON MANUFACTURER REQUIREMENTS. COORDINATE AS REQUIRED.
12. COORDINATE COLUMN SIZE, LOCATION, AND ATTACHMENT WITH BUILDING MANUFACTURER PRIOR TO INSTALLATION.

4' 2' 0' 4' 8'

1/4" = 1'-0"

90% SUBMITTAL - NOT FOR CONSTRUCTION

NO.	BY	CHK	APP	DATE	REVISIONS AND RECORD OF USE

REGISTERED PROFESSIONAL ENGINEER
CHARLES R. ASHLEY JR.
S 5258
STRUCTURAL
STATE OF CALIFORNIA

Ashley & Vance ENGINEERING, INC
JOINT VENTURE
BLACK & VEATCH
FILANC

CITY OF MORRO BAY
FILANC BLACK & VEATCH DB PROPOSAL
RECLAMATION FACILITY (WRF)

RESIDUALS AREA - DEWATERING FACILITY
STRUCTURAL
PLAN

DESIGNED: M. MARSH
DETAILED: S. BENJAMIN
CHECKED: I. SHOEBRIDGE
APPROVED: C. ASHLEY
DATE:

0 1/2 1
IF THIS BAR DOES NOT MEASURE 1" THEN DRAWING IS NOT TO FULL SCALE

PROJECT NO.
400530

72-S-101
SHEET
OF

PLOTTED: 3/24/2020 1:13:11 PM
D400530

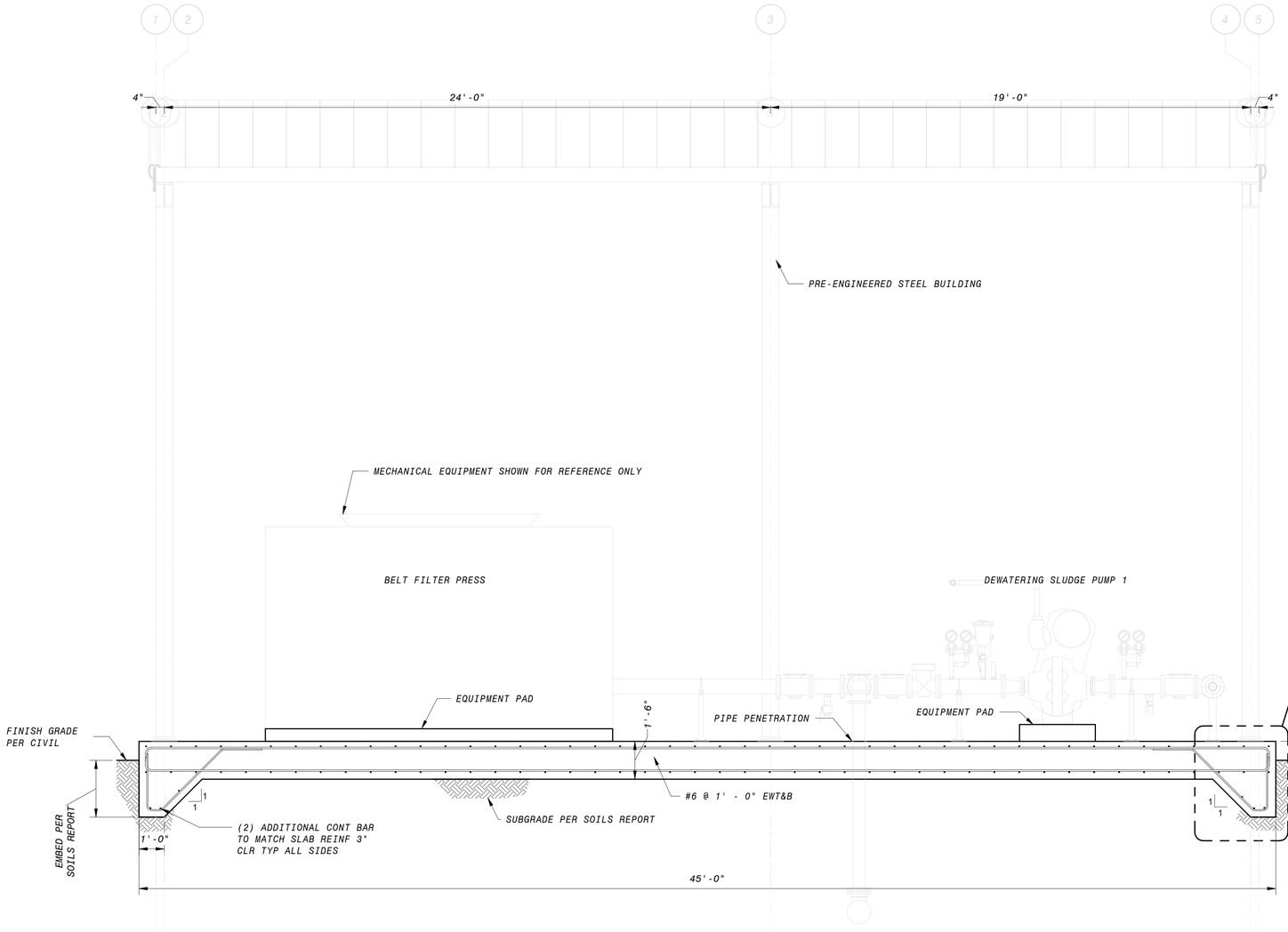

1 SECTION
72-S-101 3/8" = 1'-0"

GENERAL SECTION NOTES

1. FOR GENERAL STRUCTURAL NOTES, SEE SHEETS S-00-002 AND STANDARD SPECIFICATIONS.
2. REINFORCEMENT CLEAR COVER TO BE 2" EF FOR WALLS, 2" AT TOP OF SLABS, AND 3" AT BOTTOM OF SLABS, TYP., UNO
3. ALL LAP SPLICES TO BE CLASS B PER DETAIL 1/S-00-101.
4. REFER TO MECHANICAL DRAWINGS FOR SIZE AND LOCATIONS OF PIPE PENETRATIONS AND OPENINGS. SEE DETAIL 9/00-S-101 FOR TYPICAL REINFORCEMENT REQUIREMENTS. COORDINATE PIPE PENETRATION SEAL WITH MECHANICAL EOR (WHERE OCCURS).
5. SUBMIT EQUIPMENT WEIGHT FOR REVIEW PRIOR TO INSTALLATION. SEE DETAIL 1/00-S-105 FOR TYPICAL EQUIPMENT PADS. LOCATION & SIZE OF EQUIPMENT PADS TO BE COORDINATED WITH MECHANICAL/ ELECTRICAL/ PLUMBING DRAWINGS. EQUIPMENT ANCHORAGE PER PROJECT SPECIFICATIONS.
6. FOR TYPICAL MAT SLAB EDGE, REFER TO DETAIL 13/00-S-102.
7. ALL SLAB REINFORCEMENT MUST TERMINATE WITH A STANDARD 90° HOOK PER DETAIL 5/00-S-101.
8. COORDINATE LOCATION AND DETAILING FOR ATTACHMENT OF MECHANICAL SUPPORTS WITH BUILDING MANUFACTURER AND MECHANICAL ENGINEER OF RECORD PRIOR TO INSTALLATION.

12" 0' 1' 2' 3' 4' 5' 6' 7'
3/8" = 1'-0"

90% SUBMITTAL - NOT FOR CONSTRUCTION

NO.	BY	CHK	APP	DATE	REVISIONS AND RECORD OF USE

REGISTERED PROFESSIONAL ENGINEER
CHARLES R. ASHLEY JR.
S 5258
STRUCTURAL
STATE OF CALIFORNIA

Ashley&Vance ENGINEERING, INC
JOINT VENTURE
BLACK & VEATCH
FILANC

CITY OF MORRO BAY
FILANC BLACK & VEATCH DB PROPOSAL
RECLAMATION FACILITY (WRF)

RESIDUALS AREA - DEWATERING FACILITY
STRUCTURAL
SECTIONS & DETAILS 1

DESIGNED: M. MARSH
DETAILED: S. BENJAMIN
CHECKED: I. SHOEBRIDGE
APPROVED: C. ASHLEY
DATE:

0 1/2 1
IF THIS BAR DOES NOT MEASURE 1" THEN DRAWING IS NOT TO FULL SCALE

PROJECT NO.
400530

72-S-301
SHEET
OF

PLOTTED: 3/24/2020 1:13:12 PM
D400530

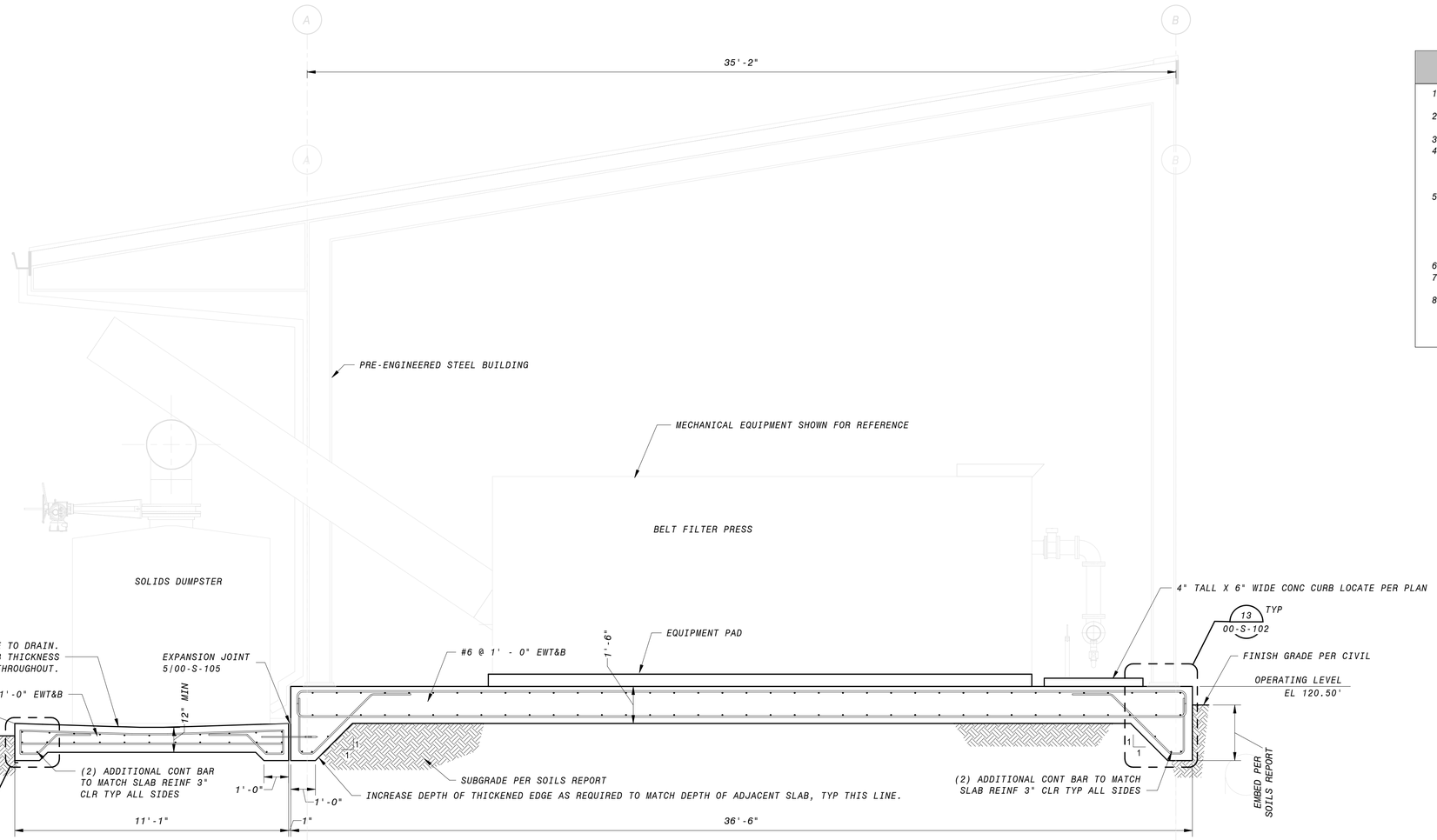

1 SECTION
72-S-101 3/8" = 1'-0"

GENERAL SECTION NOTES

1. FOR GENERAL STRUCTURAL NOTES, SEE SHEETS S-00-002 AND STANDARD SPECIFICATIONS.
2. REINFORCEMENT CLEAR COVER TO BE 2" EF FOR WALLS, 2" AT TOP OF SLABS, AND 3" AT BOTTOM OF SLABS, TYP., UNO
3. ALL LAP SPLICES TO BE CLASS B PER DETAIL 1/S-00-101.
4. REFER TO MECHANICAL DRAWINGS FOR SIZE AND LOCATIONS OF PIPE PENETRATIONS AND OPENINGS. SEE DETAIL 9/00-S-101 FOR TYPICAL REINFORCEMENT REQUIREMENTS. COORDINATE PIPE PENETRATION SEAL WITH MECHANICAL EOR (WHERE OCCURS).
5. SUBMIT EQUIPMENT WEIGHT FOR REVIEW PRIOR TO INSTALLATION. SEE DETAIL 1/00-S-105 FOR TYPICAL EQUIPMENT PADS. LOCATION & SIZE OF EQUIPMENT PADS TO BE COORDINATED WITH MECHANICAL/ ELECTRICAL/ PLUMBING DRAWINGS. EQUIPMENT ANCHORAGE PER PROJECT SPECIFICATIONS.
6. FOR TYPICAL MAT SLAB EDGE, REFER TO DETAIL 13/00-S-102.
7. ALL SLAB REINFORCEMENT MUST TERMINATE WITH A STANDARD 90° HOOK PER DETAIL 5/00-S-101.
8. COORDINATE LOCATION AND DETAILING FOR ATTACHMENT OF MECHANICAL SUPPORTS WITH BUILDING MANUFACTURER AND MECHANICAL ENGINEER OF RECORD PRIOR TO INSTALLATION.

12" 0' 1' 2' 3' 4' 5' 6' 7'
3/8" = 1'-0"

90% SUBMITTAL - NOT FOR CONSTRUCTION

NO.	BY	CHK	APP	DATE	REVISIONS AND RECORD OF USE

REGISTERED PROFESSIONAL ENGINEER
CHARLES R. ASHLEY JR.
S 5258
STRUCTURAL
STATE OF CALIFORNIA

Ashley & Vance ENGINEERING, INC
JOINT VENTURE
BLACK & VEATCH
FILANC

CITY OF MORRO BAY
FILANC BLACK & VEATCH DB PROPOSAL
RECLAMATION FACILITY (WRF)

RESIDUALS AREA - DEWATERING FACILITY
STRUCTURAL
SECTIONS & DETAILS 2

DESIGNED: M. MARSH
DETAILED: S. BENJAMIN
CHECKED: I. SHOEBRIDGE
APPROVED: C. ASHLEY
DATE:

0 1/2 1
IF THIS BAR DOES NOT MEASURE 1" THEN DRAWING IS NOT TO FULL SCALE

PROJECT NO.
400530

72-S-302
SHEET
OF

PLOTTED: 3/24/2020 1:13:12 PM
D400530

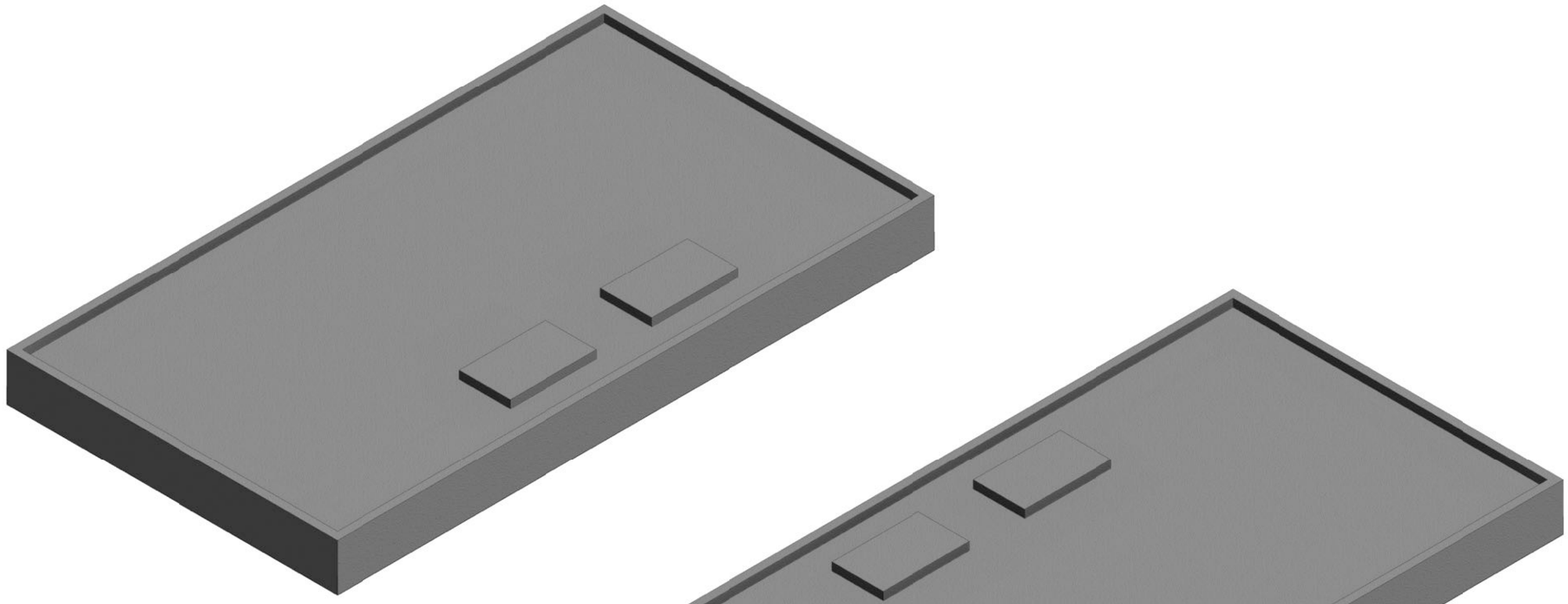

3D VIEW - NORTH

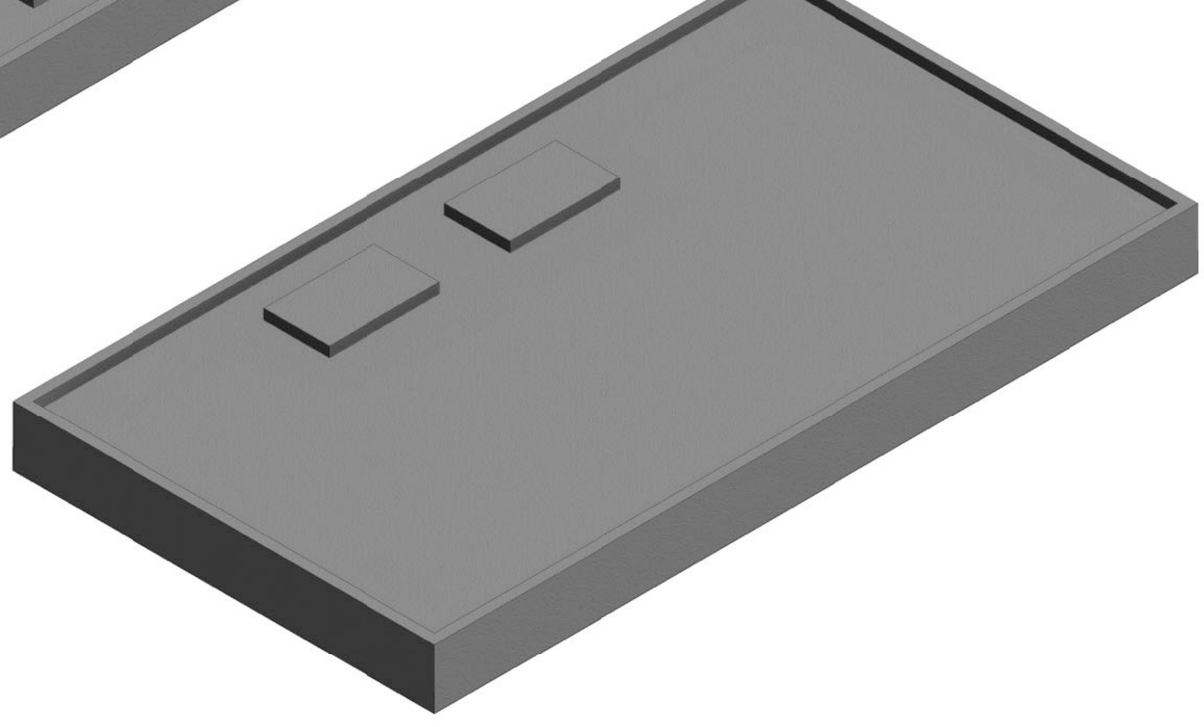

3D VIEW - SOUTH

90% SUBMITTAL- NOT FOR CONSTRUCTION

DATE	REVISIONS AND RECORD OF USE	NO.	BY	CHK	APP

REGISTERED PROFESSIONAL ENGINEER
CHARLES R. ASHLEY, JR.
S 5258
STRUCTURAL
STATE OF CALIFORNIA

Ashley & Vance ENGINEERING, INC

JOINT VENTURE

BLACK & VEATCH

FILANC

CITY OF MORRO BAY
FILANC BLACK & VEATCH DB PROPOSAL
MORRO BAY WRF

SAFE FILTER AREA
STRUCTURAL
3D VIEWS

DESIGNED: M. MARSH
DETAILED: S. BENJAMIN
CHECKED: I. SHOEBRIDGE
APPROVED: C. ASHLEY
DATE:

0 1/2 1
IF THIS BAR DOES NOT MEASURE 1" THEN DRAWING IS NOT TO FULL SCALE

PROJECT NO.
400530

73-S-001
SHEET
OF

PLOTTED: 3/24/2020 1:21:09 PM
D400530

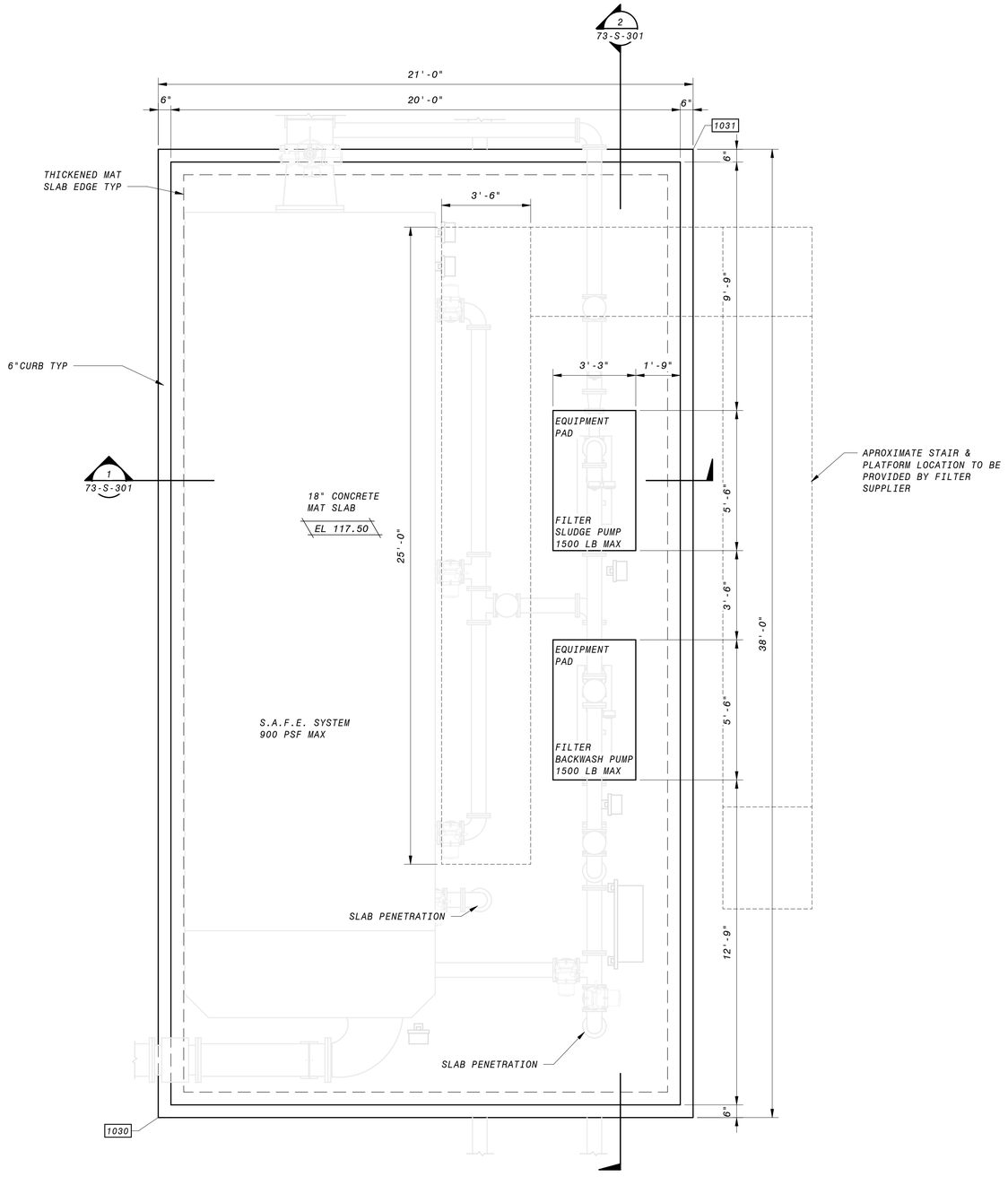

OPERATING FLOOR PLAN

3/8" = 1'-0"

GENERAL STRUCTURAL NOTES

1. PLEASE SEE SOILS REPORT FOR ADDITIONAL SPECIFICATIONS AND RECOMMENDATIONS. IT IS THE DESIGN BUILDER'S RESPONSIBILITY TO OBTAIN A COPY OF THE SOILS REPORT FROM THE OWNER OR OWNERS REPRESENTATIVE.
2. NOT USED.
3. FOR GENERAL STRUCTURAL NOTES, SEE SHEETS 00-S-002 AND STANDARD SPECIFICATIONS.
4. VERIFY ALL DIMENSIONS PRIOR TO COMMENCEMENT OF CONSTRUCTION.
5. SEE DETAIL 2/00-S-102 FOR TYP MAT SLAB ON GRADE.
6. OUTSIDE LAYER OF MAT SLAB REINFORCEMENT TO BE PLACED IN THE LONG DIRECTION. INSIDE LAYER OF MAT SLAB REINFORCEMENT TO BE PLACED IN THE SHORT DIRECTION. TYPICAL, UNLESS NOTED OTHERWISE.
7. ALL LAP SPLICES TO BE CLASS B PER DETAIL 1/00-S-101
8. SUBMIT EQUIPMENT WEIGHT FOR REVIEW PRIOR TO INSTALLATION. SEE DETAIL 1/00-S-105 FOR TYPICAL EQUIPMENT PADS. LOCATION AND SIZE OF EQUIPMENT PADS TO BE COORDINATED WITH MECHANICAL/ELECTRICAL/PLUMBING DRAWINGS. EQUIPMENT ANCHORAGE PER PROJECT SPECIFICATIONS.
9. REFER TO MECHANICAL/ELECTRICAL/PLUMBING DRAWINGS FOR SIZE AND LOCATIONS OF PIPE PENETRATIONS AND WALL OPENINGS. SEE DETAIL 9/00-S-101 FOR TYPICAL REINFORCEMENT REQUIREMENTS. COORDINATE PIPE PENETRATION SEAL WITH MECHANICAL ENGINEER OF RECORD.
10. ALL SLAB REINFORCEMENT MUST TERMINATE WITH A STANDARD 90° HOOK PER DETAIL 5/00-S-101.
11. FOR TYPICAL MAT SLAB EDGE, REFER TO DETAIL 13/00-S-102.

12" 0' 1' 2' 3' 4' 5' 6' 7'

3/8" = 1'-0"

90% SUBMITTAL- NOT FOR CONSTRUCTION

NO.	BY	CHK	APP	DATE	REVISIONS AND RECORD OF USE

REGISTERED PROFESSIONAL ENGINEER
CHARLES R. ASHLEY JR.
S 5258
STRUCTURAL
STATE OF CALIFORNIA

Ashley & Vance ENGINEERING, INC

BLACK & VEATCH

JOINT VENTURE

FILANC

CITY OF MORRO BAY
FILANC BLACK & VEATCH DB PROPOSAL
MORRO BAY WRF

SAFE FILTER AREA
STRUCTURAL
PLAN

DESIGNED: M. MARSH
DETAILED: S. BENJAMIN
CHECKED: I. SHOEBRIDGE
APPROVED: C. ASHLEY
DATE:

0 1/2 1
IF THIS BAR DOES NOT MEASURE 1" THEN DRAWING IS NOT TO FULL SCALE

PROJECT NO.
400530

73-S-101
SHEET
OF

PLOTTED: 3/24/2020 1:21:10 PM
D400530

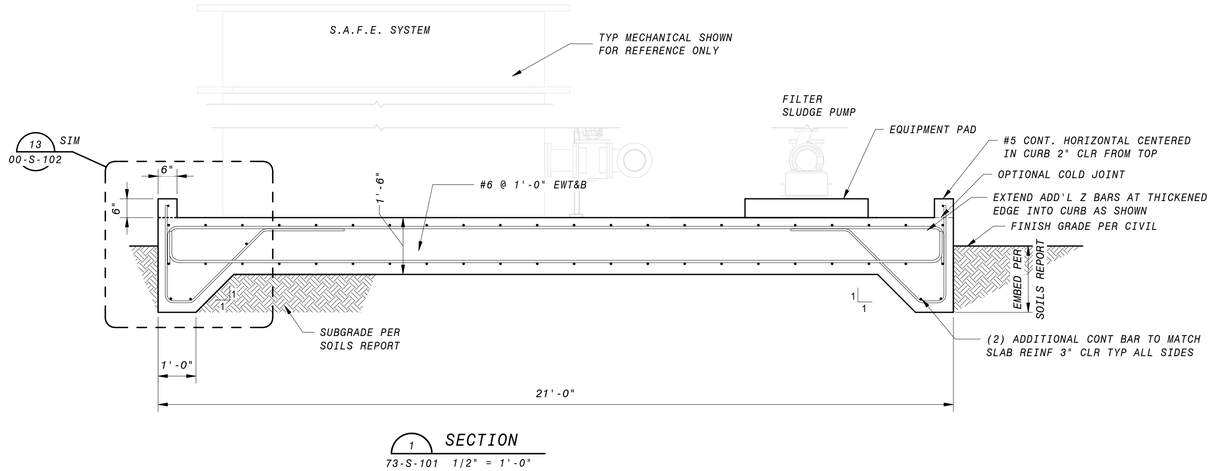

1 SECTION
73-S-101 1/2" = 1'-0"

GENERAL SECTION NOTES

1. FOR GENERAL STRUCTURAL NOTES, SEE SHEETS 00-S-002 AND STANDARD SPECIFICATIONS.
2. REINFORCEMENT CLEAR COVER TO BE 2" EF FOR WALLS, 2" AT TOP OF SLABS, AND 3" AT BOTTOM OF SLABS, TYP., UNO
3. ALL LAP SPLICES TO BE CLASS B PER DETAIL 1/00-S-101.
4. REFER TO MECHANICAL DRAWINGS FOR SIZE AND LOCATIONS OF PIPE PENETRATIONS AND WALL OPENINGS. SEE DETAIL 9/00-S-101 FOR TYPICAL REINFORCEMENT REQUIREMENTS. COORDINATE PIPE PENETRATION SEAL WITH MECHANICAL EOR (WHERE OCCURS).
5. SUBMIT EQUIPMENT WEIGHT FOR REVIEW PRIOR TO INSTALLATION. SEE DETAIL 1/00-S-105 FOR TYPICAL EQUIPMENT PADS. LOCATION & SIZE OF EQUIPMENT PADS TO BE COORDINATED WITH MECHANICAL/ELECTRICAL/PLUMBING DRAWINGS. EQUIPMENT ANCHORAGE PER PROJECT SPECIFICATIONS.
6. ALL SLAB REINFORCEMENT MUST TERMINATE WITH A STANDARD 90° HOOK PER DETAIL 05/00-S-101.
7. FOR TYPICAL MAT SLAB EDGE, REFER TO DETAIL 13/00-S-102.

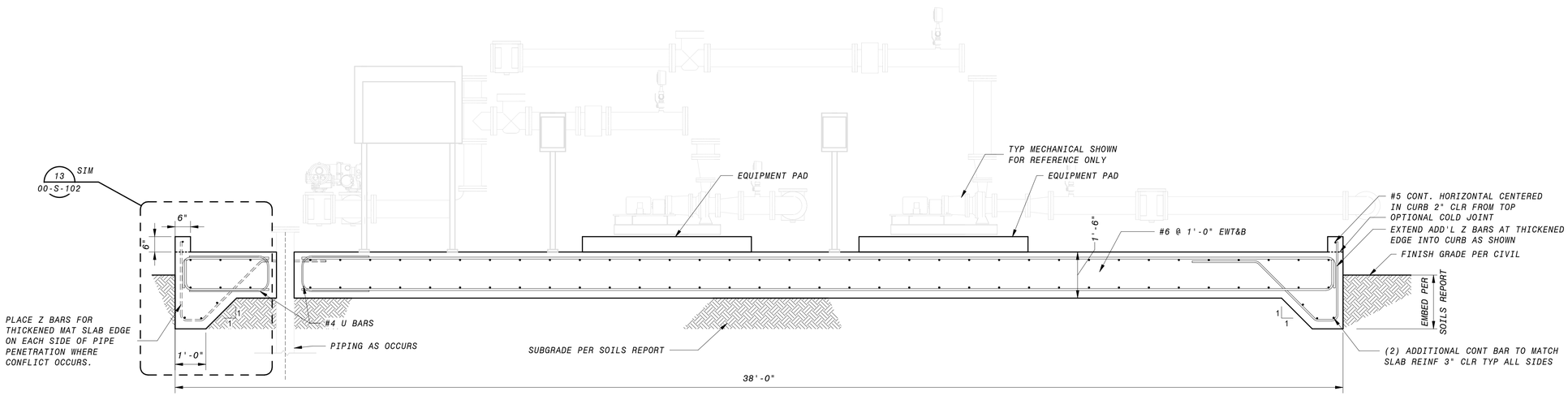

2 SECTION
73-S-101 1/2" = 1'-0"

12' 6' 0' 1' 2' 3' 4' 5'
1/2" = 1'-0"

90% SUBMITTAL- NOT FOR CONSTRUCTION

NO.	BY	CHK	APP	DATE	REVISIONS AND RECORD OF USE

REGISTERED PROFESSIONAL ENGINEER
CHARLES R. ASHLEY JR.
S 5258
STRUCTURAL
STATE OF CALIFORNIA

Ashley & Vance ENGINEERING, INC
JOINT VENTURE
BLACK & VEATCH
FILANC

CITY OF MORRO BAY
FILANC BLACK & VEATCH DB PROPOSAL
MORRO BAY WRF

SAFE FILTER AREA
STRUCTURAL
SECTIONS

DESIGNED: M. MARSH
DETAILED: S. BENJAMIN
CHECKED: I. SHOEBRIDGE
APPROVED: C. ASHLEY
DATE:

0 1/2 1
IF THIS BAR DOES NOT MEASURE 1" THEN DRAWING IS NOT TO FULL SCALE

PROJECT NO.
400530

73-S-301
SHEET
OF

PLOTTED: 3/24/2020 1:21:11 PM
D400530

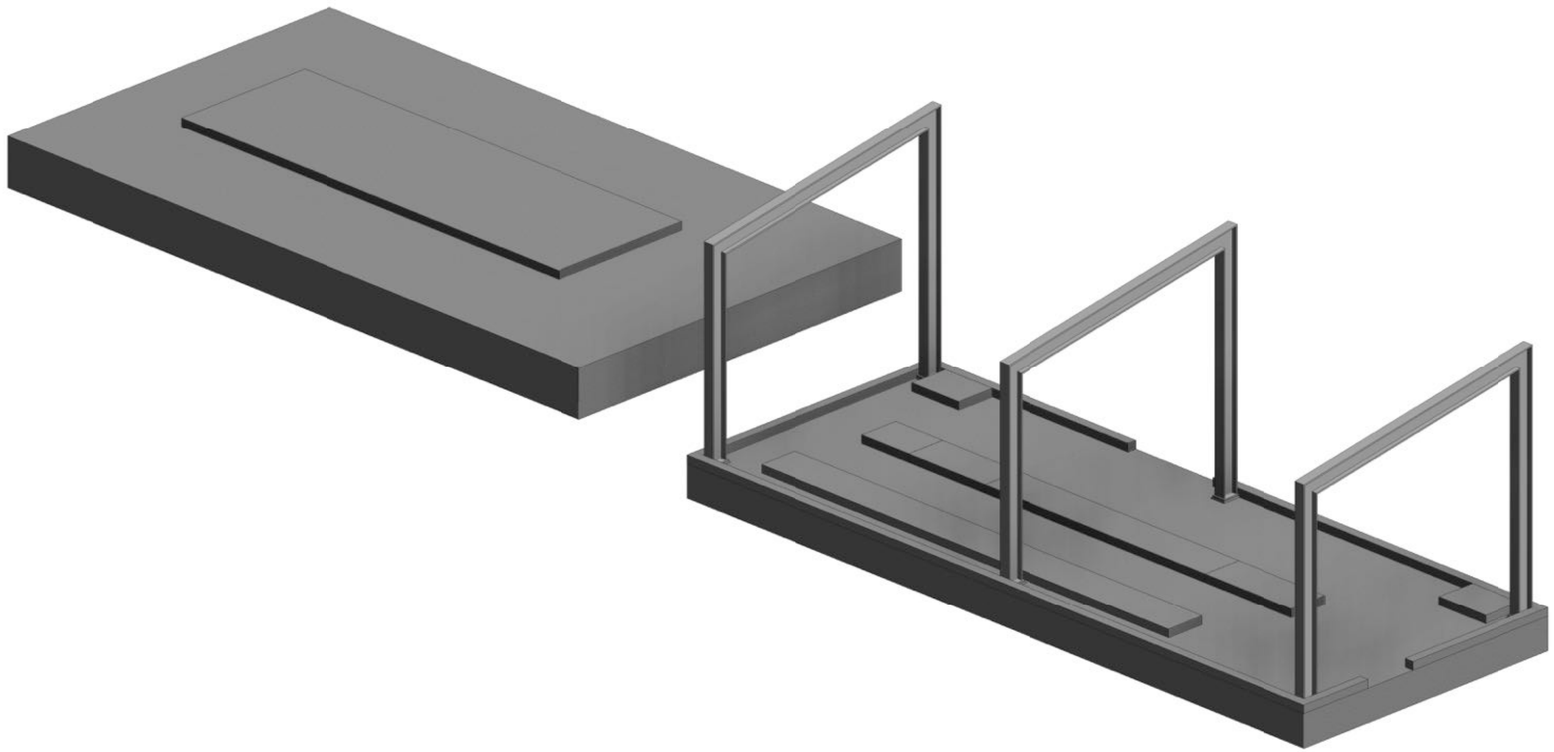

3D VIEW - SOUTH

90% SUBMITTAL - NOT FOR CONSTRUCTION

NO.	BY	CHK	APP	DATE	REVISIONS AND RECORD OF USE

REGISTERED PROFESSIONAL ENGINEER
CHARLES R. ASHLEY JR.
S 5258
STRUCTURAL
STATE OF CALIFORNIA

Ashley & Vance ENGINEERING, INC

JOINT VENTURE

BLACK & VEATCH

FILANC

CITY OF MORRO BAY
FILANC BLACK & VEATCH DB PROPOSAL
MORRO BAY WRF

ELECTRICAL BUILDING
STRUCTURAL
3D VIEW

DESIGNED: M. MARSH
DETAILED: S. BENJAMIN
CHECKED: I. SHOEBRIDGE
APPROVED: C. ASHLEY
DATE:

0 1/2 1
IF THIS BAR DOES NOT MEASURE 1" THEN DRAWING IS NOT TO FULL SCALE

PROJECT NO.
400530

80-S-001
SHEET
OF

PLOTTED: 3/24/2020 1:27:19 PM
D400530

NOTES:

1. DESIGN AND DRAWINGS FOR STEEL FRAME PRE-ENGINEERED METAL BUILDING TO BE PROVIDED BY BUILDING MFR. SEE SPECIFICATIONS FOR DESIGN CRITERIA.
2. FOUNDATION DESIGN HAS BEEN BASED ON THE FOLLOWING FRAME REACTIONS, ASSUMING A PINNED COLUMN BASE:

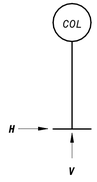

LOAD	VERTICAL V (K)	HORIZONTAL H (K)
DEAD	4.0	0.5
ROOF LIVE	8.0	0.5
SEISMIC	4.0	1.5
WIND (MAX)	16.0	4.0
WIND (MIN)	-16.0	-4.0

3. FOUNDATION HAS BEEN DESIGNED FOR A LIVE LOAD OF 100 PSF.
4. FRAME REACTIONS INCLUDE BOTH PRINCIPLE DIRECTIONS AND ORTHOGONAL COMBINATION EFFECTS.

GENERAL NOTES

1. PLEASE SEE SOILS REPORT FOR ADDITIONAL SPECIFICATIONS AND RECOMMENDATIONS. IT IS THE DESIGN-BUILDER'S RESPONSIBILITY TO OBTAIN A COPY OF THE SOILS REPORT FROM THE OWNER OR OWNERS REPRESENTATIVE.
2. NOT USED.
3. FOR GENERAL STRUCTURAL NOTES, SEE SHEETS 00-S-002 AND STANDARD SPECIFICATIONS.
4. VERIFY ALL DIMENSIONS PRIOR TO COMMENCEMENT OF CONSTRUCTION.
5. SEE DETAIL 2/00-S-102 FOR TYP MAT SLAB ON GRADE.
6. ALL LAP SPLICES TO BE CLASS B PER DETAIL 1/00-S-101
7. SUBMIT EQUIPMENT WEIGHT FOR REVIEW PRIOR TO INSTALLATION. SEE DETAIL 1/00-S-105 FOR TYPICAL EQUIPMENT PADS. LOCATION AND SIZE OF EQUIPMENT PADS TO BE COORDINATED WITH MECHANICAL/ELECTRICAL/PLUMBING DRAWINGS. EQUIPMENT ANCHORAGE PER PROJECT SPECIFICATIONS.
8. REFER TO MECHANICAL/ELECTRICAL/PLUMBING DRAWINGS FOR SIZE AND LOCATIONS OF PIPE PENETRATIONS AND WALL OPENINGS. SEE DETAIL 9/00-S-101 FOR TYPICAL REINFORCEMENT REQUIREMENTS. COORDINATE PIPE PENETRATION SEAL WITH MECHANICAL ENGINEER OF RECORD.
9. COORDINATE LOCATION AND DETAILING FOR ATTACHMENT OF MECHANICAL SUPPORTS WITH BUILDING MANUFACTURER AND MECHANICAL ENGINEER OF RECORD PRIOR TO INSTALLATION.
10. ALL SLAB REINFORCEMENT MUST TERMINATE WITH A STANDARD 90° HOOK PER DETAIL 5/00-S-101.
11. FOR TYPICAL MAT SLAB EDGE, REFER TO DETAIL 13/00-S-102.
12. COORDINATE COLUMN SIZE, LOCATION, AND ATTACHMENT WITH BUILDING MANUFACTURER PRIOR TO INSTALLATION.

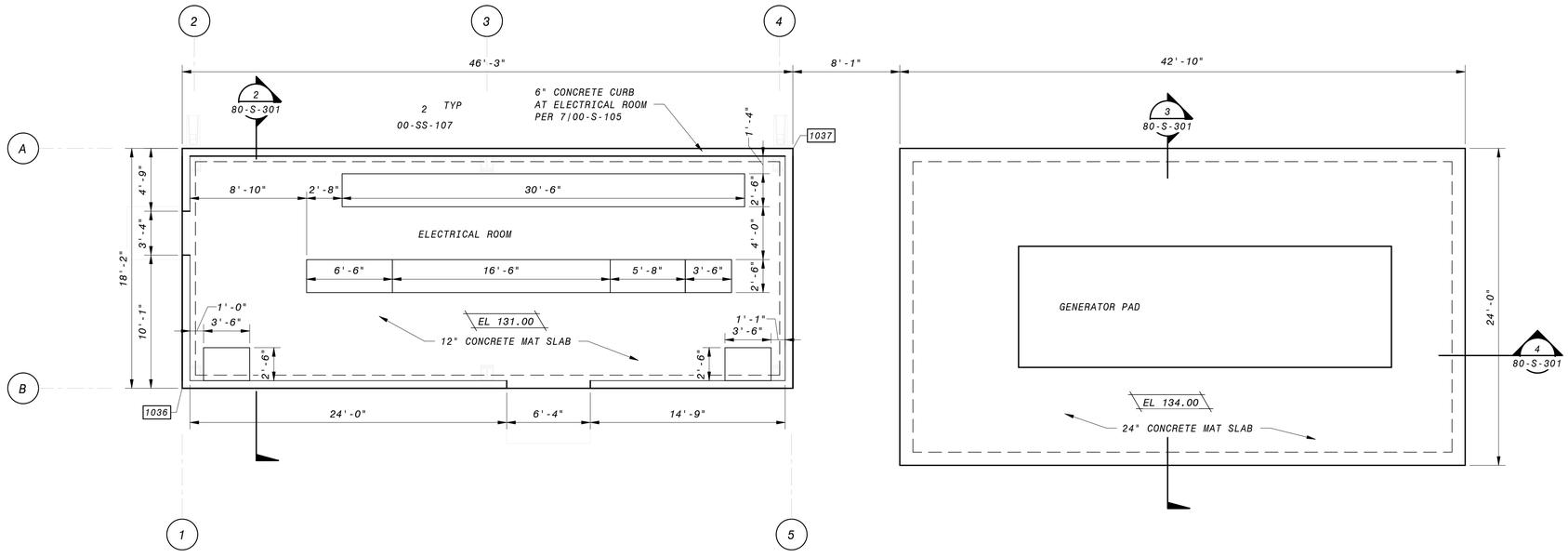

OPERATING FLOOR PLAN

3/16" = 1'-0"

6" 4' 2' 0' 5' 10'

3/16" = 1'-0"

90% SUBMITTAL - NOT FOR CONSTRUCTION

NO.	BY	CHK	APP	DATE	REVISIONS AND RECORD OF USE

REGISTERED PROFESSIONAL ENGINEER
CHARLES R. ASHLEY JR.
S 5258
STRUCTURAL
STATE OF CALIFORNIA

Ashley & Vance ENGINEERING, INC

BLACK & VEATCH

JOINT VENTURE

FILANC

CITY OF MORRO BAY
FILANC BLACK & VEATCH DB PROPOSAL
MORRO BAY WRF

ELECTRICAL BUILDING
STRUCTURAL
PLAN

DESIGNED: M. MARSH
DETAILED: S. BENJAMIN
CHECKED: I. SHOEBRIDGE
APPROVED: C. ASHLEY
DATE:

0 1/2 1
IF THIS BAR DOES NOT MEASURE 1" THEN DRAWING IS NOT TO FULL SCALE

PROJECT NO.
400530

80-S-101
SHEET
OF

PLOTTED: 3/24/2020 1:27:20 PM
D400530

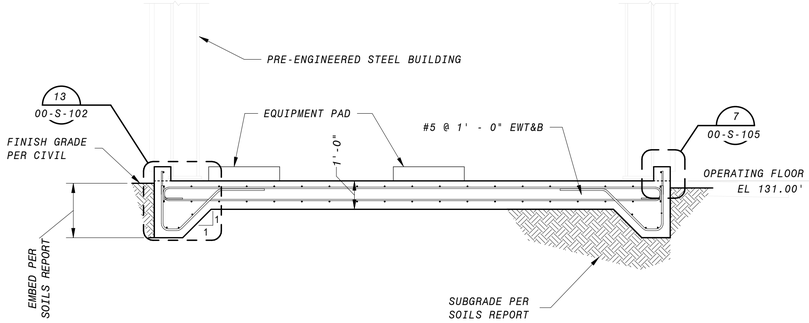

2 SECTION AT ELECTRICAL BUILDING
80-S-101 3/8" = 1'-0"

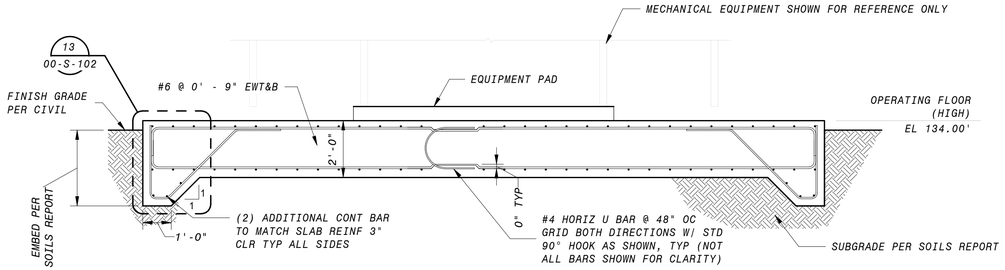

3 SECTION AT GENERATOR
80-S-101 3/8" = 1'-0"

GENERAL SECTION NOTES

1. FOR GENERAL STRUCTURAL NOTES, SEE SHEETS 00-S-002 AND STANDARD SPECIFICATIONS.
2. REINFORCEMENT CLEAR COVER TO BE 2" EF FOR WALLS, 2" AT TOP OF SLABS, AND 3" AT BOTTOM OF SLABS, TYP., UNO
3. ALL LAP SPLICES TO BE CLASS B PER DETAIL 1/00-S-101.
4. REFER TO MECHANICAL DRAWINGS FOR SIZE AND LOCATIONS OF PIPE PENETRATIONS. SEE DETAIL 9/00-S-101 FOR TYPICAL REINFORCEMENT REQUIREMENTS. COORDINATE PIPE PENETRATION SEAL WITH MECHANICAL EOR (WHERE OCCURS).
5. SUBMIT EQUIPMENT WEIGHT FOR REVIEW PRIOR TO INSTALLATION. SEE DETAIL 1/00-S-105 FOR TYPICAL EQUIPMENT PADS. LOCATION & SIZE OF EQUIPMENT PADS TO BE COORDINATED WITH MECHANICAL/ ELECTRICAL/ PLUMBING DRAWINGS. EQUIPMENT ANCHORAGE PER PROJECT SPECIFICATIONS.
6. COORDINATE LOCATION AND DETAILING FOR ATTACHMENT OF MECHANICAL SUPPORTS WITH BUILDING MANUFACTURER AND MECHANICAL ENGINEER OF RECORD PRIOR TO INSTALLATION.
7. TYPICAL STEPPED FOOTING PER DETAIL 10/00-S-102
8. TEMPORARY SHORING TO REMAIN IN PLACE ON RETAINING WALLS UNTIL SLAB IS POURED ABOVE.

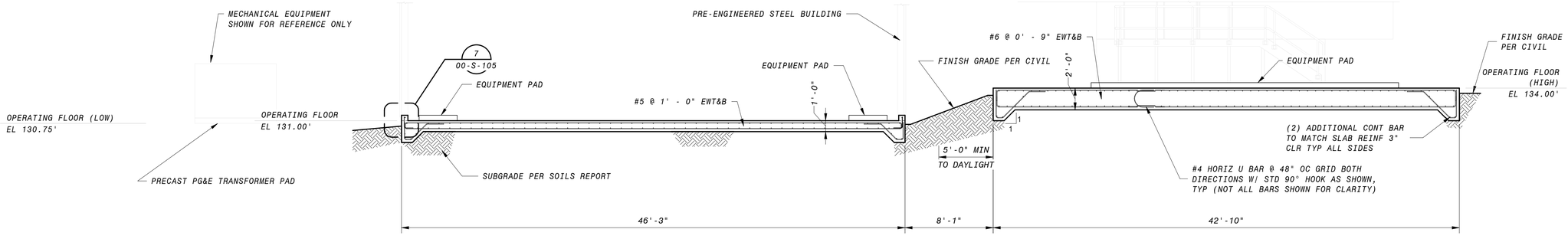

4 SECTION
80-S-101 3/16" = 1'-0"

12" 0' 1' 2' 3' 4' 5' 6' 7'
3/8" = 1'-0"

6" 4' 2' 0' 5' 10'
3/16" = 1'-0"

90% SUBMITTAL - NOT FOR CONSTRUCTION

NO.	BY	CHK	APP	DATE	REVISIONS AND RECORD OF USE

REGISTERED PROFESSIONAL ENGINEER
CHARLES R. ASHLEY JR.
S 5258
STRUCTURAL
STATE OF CALIFORNIA

Ashley & Vance ENGINEERING, INC
JOINT VENTURE
BLACK & VEATCH
FILANC

CITY OF MORRO BAY
FILANC BLACK & VEATCH DB PROPOSAL
MORRO BAY WRF

ELECTRICAL BUILDING
STRUCTURAL
SECTIONS

DESIGNED: M. MARSH
DETAILED: S. BENJAMIN
CHECKED: I. SHOEBRIDGE
APPROVED: C. ASHLEY
DATE:

0 1/2 1
IF THIS BAR DOES NOT MEASURE 1" THEN DRAWING IS NOT TO FULL SCALE

PROJECT NO.
400530

80-S-301
SHEET
OF

PLOTTED: 3/24/2020 1:27:21 PM
D400530

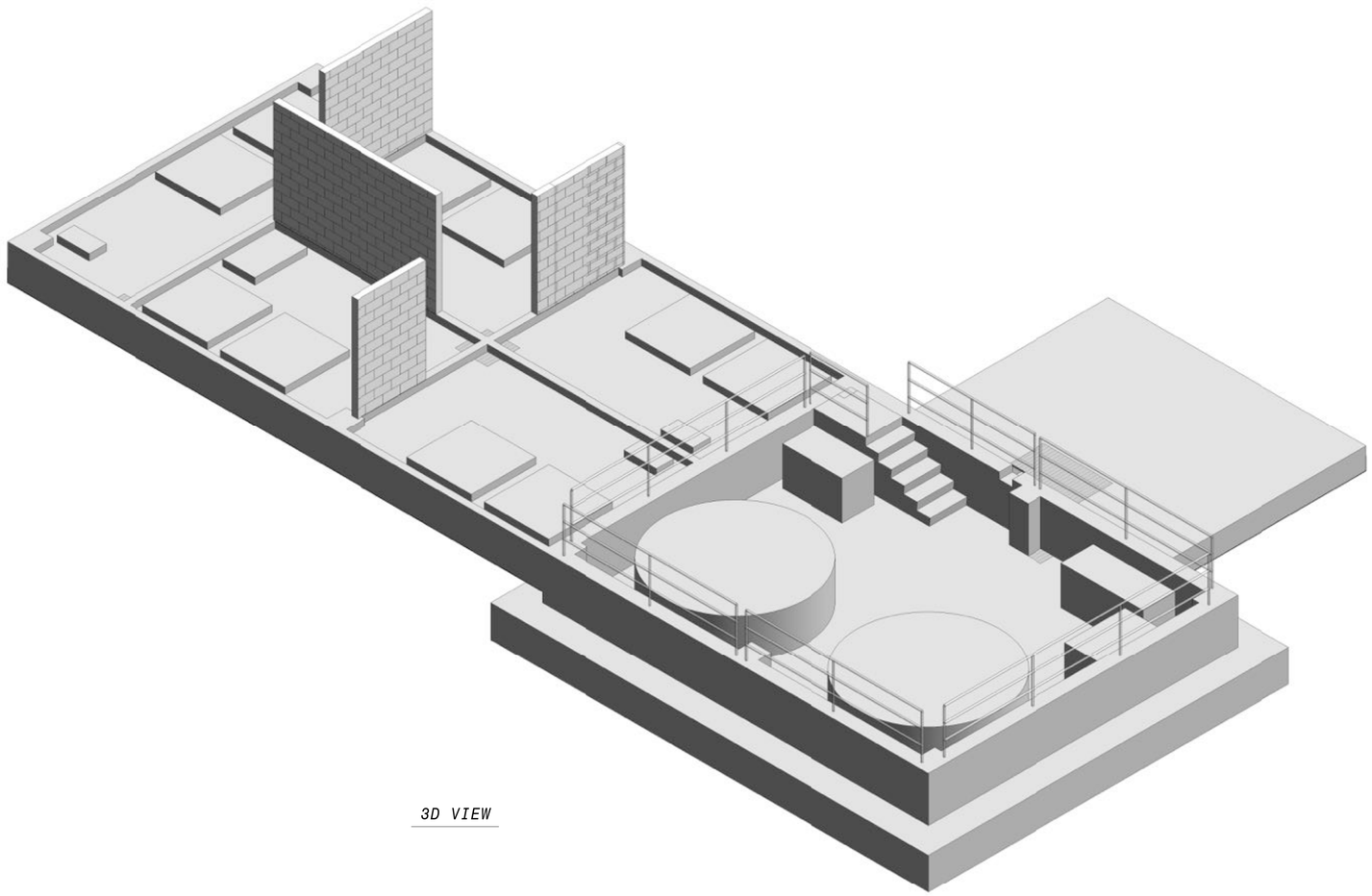

3D VIEW

90% SUBMITTAL - NOT FOR CONSTRUCTION

DATE	REVISIONS AND RECORD OF USE	NO.	BY	CHK	APP

REGISTERED PROFESSIONAL ENGINEER
CHARLES R. ASHLEY JR.
S 5258
STRUCTURAL
STATE OF CALIFORNIA

Ashley & Vance ENGINEERING, INC

JOINT VENTURE

BLACK & VEATCH

FILANC

CITY OF MORRO BAY
FILANC BLACK & VEATCH DB PROPOSAL
MORRO BAY WRF

CHEMICAL FACILITY
STRUCTURAL
3D VIEWS

DESIGNED: C. TAYLOR
DETAILED: S. BENJAMIN
CHECKED: I. SHOEBRIDGE
APPROVED: C. ASHLEY
DATE:

0 1/2 1
IF THIS BAR DOES NOT MEASURE 1" THEN DRAWING IS NOT TO FULL SCALE

PROJECT NO.
400530

90-S-001
SHEET
OF

PLOTTED: 3/24/2020 1:35:36 PM
D400530

GENERAL NOTES

1. PLEASE SEE SOILS REPORT FOR ADDITIONAL SPECIFICATIONS AND RECOMMENDATIONS. IT IS THE DESIGN-BUILDER'S RESPONSIBILITY TO OBTAIN A COPY OF THE SOILS REPORT FROM THE OWNER OR OWNERS REPRESENTATIVE.
2. NOT USED.
3. FOR GENERAL STRUCTURAL NOTES, SEE SHEETS 00-S-002 AND STANDARD SPECIFICATIONS
4. DESIGN-BUILDER TO VERIFY ALL DIMENSIONS PRIOR TO COMMENCEMENT OF CONSTRUCTION.
5. ALL LAP SPLICES TO BE CLASS B PER DETAIL 1/00-S-101.
6. SUBMIT EQUIPMENT WEIGHT FOR REVIEW PRIOR TO INSTALLATION. LOCATION AND SIZE OF EQUIPMENT PADS TO BE COORDINATED WITH MECHANICAL/ELECTRICAL/PLUMBING DRAWINGS. EQUIPMENT ANCHORAGE PER PROJECT SPECIFICATIONS.
7. REFER TO MECHANICAL/ELECTRICAL/PLUMBING DRAWINGS FOR SIZE AND LOCATIONS OF PIPE PENETRATIONS AND WALL OPENINGS. SEE DETAIL 9/00-S-101 FOR TYPICAL REINFORCEMENT REQUIREMENTS. COORDINATE PIPE PENETRATION SEAL WITH MECHANICAL ENGINEER OF RECORD.
8. COORDINATE LOCATION AND DETAILING FOR ATTACHMENT OF MECHANICAL SUPPORTS WITH BUILDING MANUFACTURER AND MECHANICAL ENGINEER OF RECORD PRIOR TO INSTALLATION.
9. COORDINATE COLUMN SIZE, LOCATION, AND ATTACHMENT WITH BUILDING MANUFACTURER PRIOR TO INSTALLATION. SEE DETAILS 1 & 2/00-SS-107 FOR ADDITIONAL REINFORCEMENT REQUIREMENTS AT COLUMN ANCHORAGE.
10. IF SPLICES RESULT IN CLEAR SPACING LESS THAN ACI CODE MINIMUMS, PROVIDE TYPE 2 MECHANICAL SPLICES. MECHANICAL CONNECTORS SHALL BE SUBMITTED FOR REVIEW AND APPROVAL.
11. FOR TYPICAL MAT SLAB EDGE, REFER TO DETAIL 13/00-S-102

NOTES:

1. DESIGN AND DRAWINGS FOR STEEL FRAME PRE-ENGINEERED METAL BUILDING TO BE PROVIDED BY BUILDING MFR. SEE SPECIFICATIONS FOR DESIGN CRITERIA.
2. FOUNDATION DESIGN HAS BEEN BASED ON THE FOLLOWING FRAME REACTIONS, ASSUMING A PINNED COLUMN BASE:

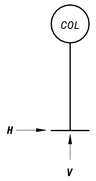

LOAD	VERTICAL V (K)	HORIZONTAL H (K)
DEAD	2.0	0.5
ROOF LIVE	8.0	0.5
SEISMIC	4.0	1.5
WIND (MAX)	20.0	5.0
WIND (MIN)	-20.0	-5.0

3. FOUNDATION HAS BEEN DESIGNED FOR A LIVE LOAD OF 150 PSF.
4. FRAME REACTIONS INCLUDE BOTH PRINCIPLE DIRECTIONS AND ORTHOGONAL COMBINATION EFFECTS.

OPERATING FLOOR PLAN

3/8" = 1'-0"

12" 0' 1' 2' 3' 4' 5' 6' 7'

3/8" = 1'-0"

90% SUBMITTAL - NOT FOR CONSTRUCTION

NO.	BY	CHK	APP	DATE	REVISIONS AND RECORD OF USE

REGISTERED PROFESSIONAL ENGINEER CHARLES R. ASHLEY JR. S 5258 STRUCTURAL STATE OF CALIFORNIA

Ashley & Vance ENGINEERING, INC

JOINT VENTURE

BLACK & VEATCH

FILANC

CITY OF MORRO BAY
FILANC BLACK & VEATCH DB PROPOSAL
MORRO BAY WRF

CHEMICAL FACILITY
STRUCTURAL
PLAN

DESIGNED: C. TAYLOR
DETAILED: S. BENJAMIN
CHECKED: I. SHOEBRIDGE
APPROVED: C. ASHLEY
DATE:

0 1/2 1

IF THIS BAR DOES NOT MEASURE 1" THEN DRAWING IS NOT TO FULL SCALE

PROJECT NO. 400530

90-S-101
SHEET OF

PLOTTED: 3/24/2020 1:35:37 PM

0400530

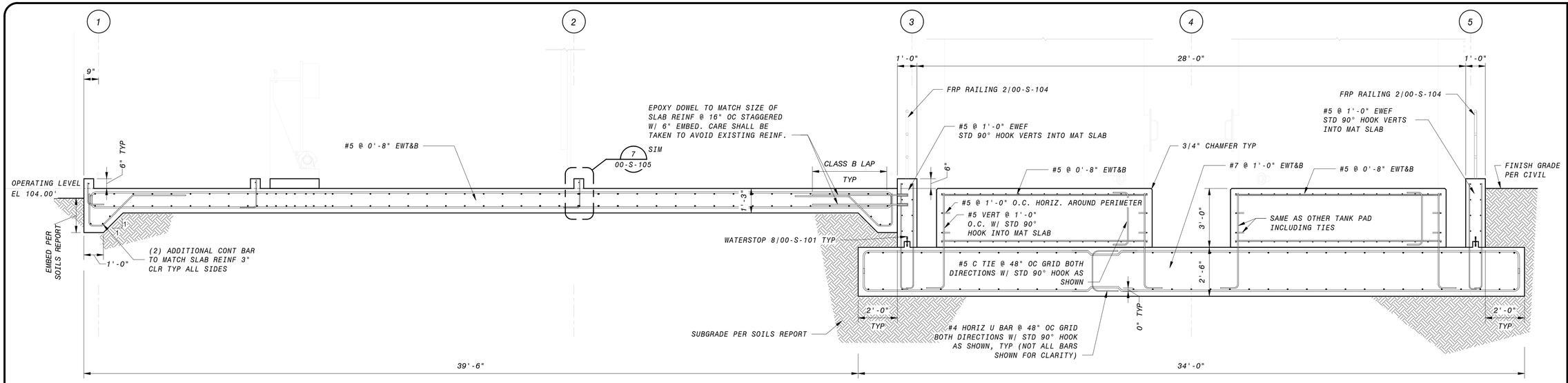

1 SECTION
90-S-101 3/8" = 1'-0"

GENERAL SECTION NOTES

1. FOR GENERAL STRUCTURAL NOTES, SEE SHEETS 00-S-002 AND STANDARD SPECIFICATIONS.
2. AT WALLS 12" THICK OR LESS, PROVIDE A 6" WATERSTOP, UNO. AT WALLS GREATER THAN 12" THICK, PROVIDE A 9" WATERSTOP, UNO. REFER TO DETAIL 2 ON SHEET 00-S-103.
3. REINFORCEMENT CLEAR COVER TO BE 2" EF FOR WALLS, 2" AT TOP OF SLABS, AND 3" AT BOTTOM OF SLABS, TYP.,UNO
4. ALL LAP SPLICES TO BE CLASS B PER DETAIL 1/00-S-101.
5. REFER TO MECHANICAL DRAWINGS FOR SIZE AND LOCATIONS OF PIPE PENETRATIONS AND WALL OPENINGS. SEE DETAIL 9/00-S-101 FOR TYPICAL REINFORCEMENT REQUIREMENTS. COORDINATE PIPE PENETRATION SEAL WITH MECHANICAL EOR (WHERE OCCURS).
6. SUBMIT EQUIPMENT WEIGHT FOR REVIEW PRIOR TO INSTALLATION. SEE DETAIL 1/00-S-105 FOR TYPICAL EQUIPMENT PADS. LOCATION & SIZE OF EQUIPMENT PADS TO BE COORDINATED WITH MECHANICAL/ ELECTRICAL/ PLUMBING DRAWINGS. EQUIPMENT ANCHORAGE PER PROJECT SPECIFICATIONS.
7. FOR TYPICAL MAT SLAB EDGE, REFER TO DETAIL 13/00-S-102.
8. PROVIDE COMPLETE DESIGN PACKAGE FOR FRP RAILING SIGNED BY A REGISTERED PROFESSIONAL ENGINEER FOR REVIEW. CARE TO BE TAKEN TO NOT HIT REINFORCEMENT. REFER TO DETAIL 5/00-S-104 FOR SIMILAR CONDITIONS. COORDINATE WITH FRP SPECIFICATION 06 74 15.
9. ALL SLAB REINFORCEMENT MUST TERMINATE WITH A STANDARD 90° HOOK PER DETAIL 5/00-S-101.

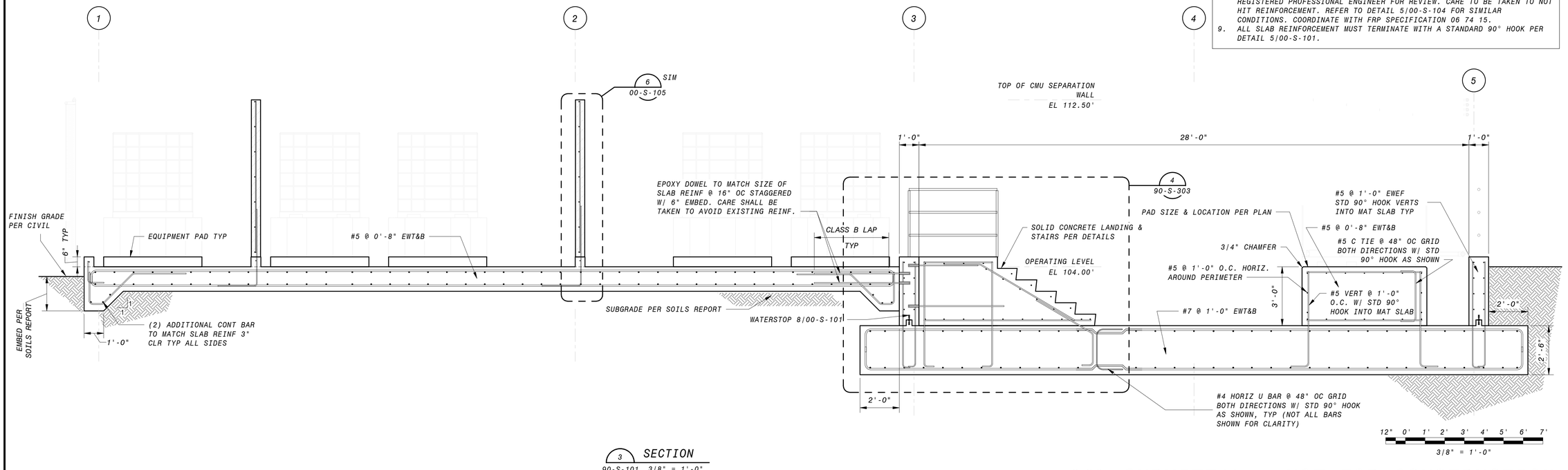

3 SECTION
90-S-101 3/8" = 1'-0"

90% SUBMITTAL - NOT FOR CONSTRUCTION

NO.	BY	CHK APP	DATE	REVISIONS AND RECORD OF USE

REGISTERED PROFESSIONAL ENGINEER
CHARLES R. ASHLEY JR.
S 5258
STRUCTURAL
STATE OF CALIFORNIA

Ashley & Vance ENGINEERING, INC
JOINT VENTURE
BLACK & VEATCH
FILANC

CITY OF MORRO BAY
FILANC BLACK & VEATCH DB PROPOSAL
MORRO BAY WRF

CHEMICAL FACILITY
STRUCTURAL
SECTIONS & DETAILS

DESIGNED: C. TAYLOR
DETAILED: S. BENJAMIN
CHECKED: I. SHOEBRIDGE
APPROVED: C. ASHLEY
DATE:

0 1/2 1
IF THIS BAR DOES NOT MEASURE 1" THEN DRAWING IS NOT TO FULL SCALE

PROJECT NO.
400530

90-S-301
SHEET
OF

PLOTTED: 3/24/2020 1:35:38 PM
0400530

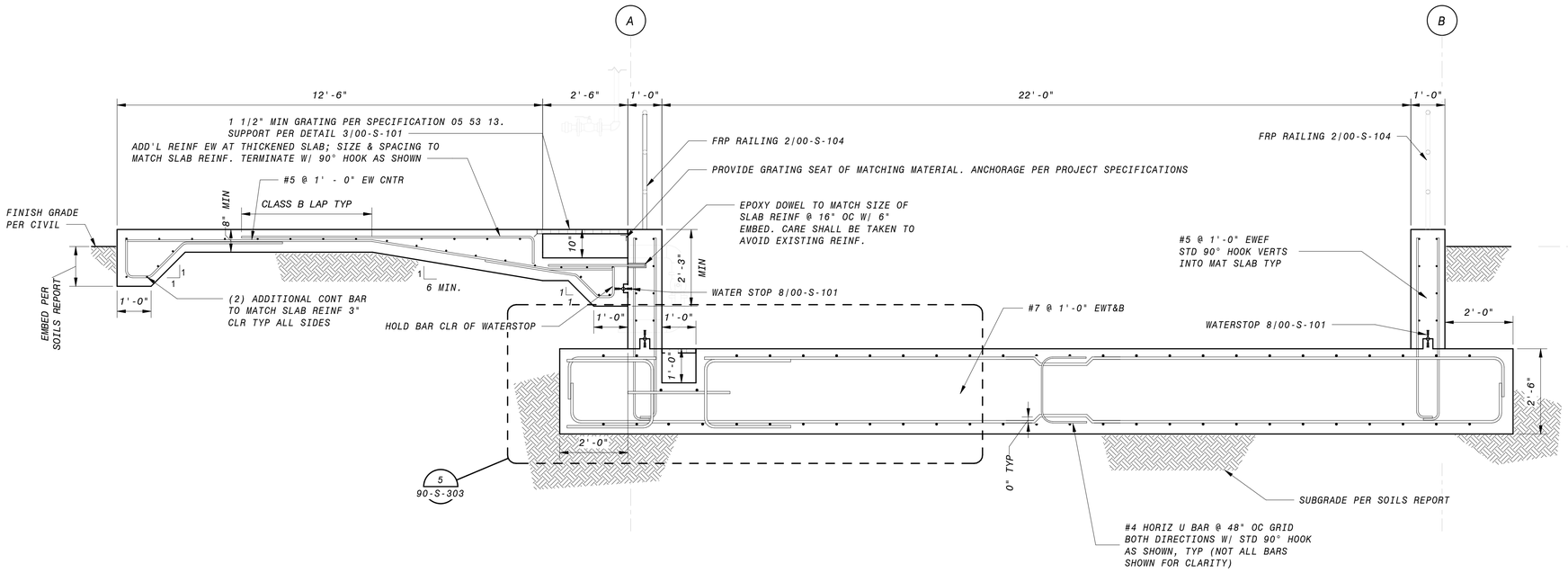

1 SECTION
90-S-101 1/2" = 1'-0"

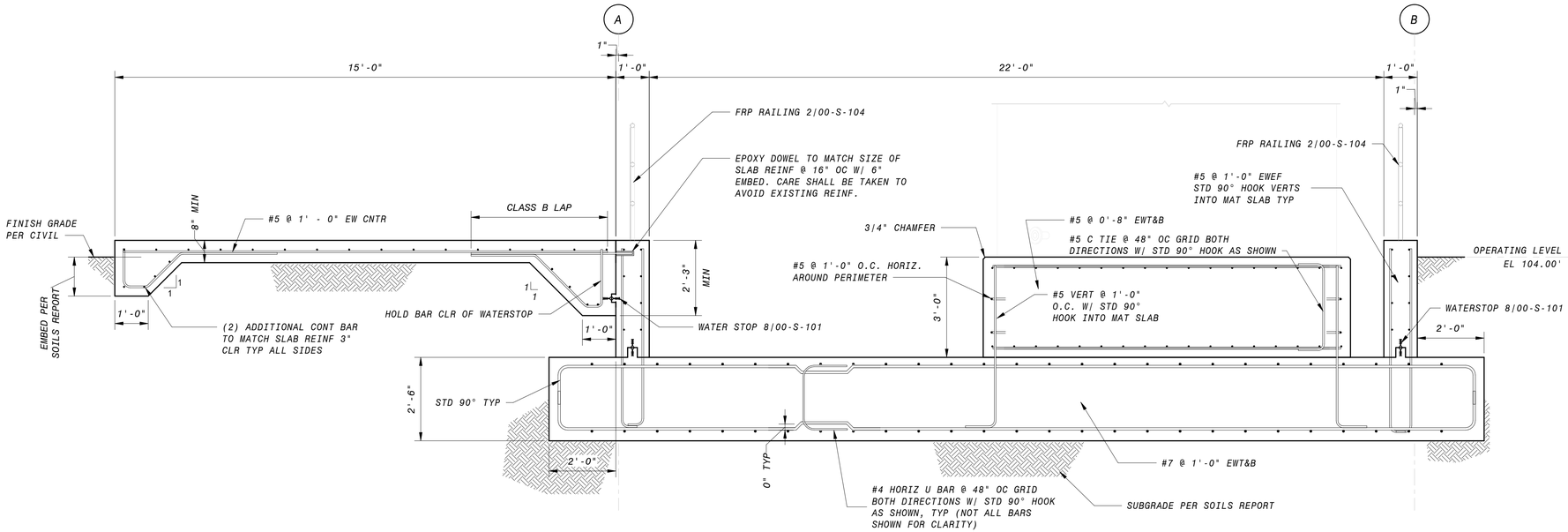

2 SECTION
90-S-101 1/2" = 1'-0"

GENERAL SECTION NOTES

1. FOR GENERAL STRUCTURAL NOTES, SEE SHEETS 00-S-002 AND STANDARD SPECIFICATIONS.
2. AT WALLS 12" THICK OR LESS, PROVIDE A 6" WATERSTOP, UNO. AT WALLS GREATER THAN 12" THICK, PROVIDE A 9" WATERSTOP, UNO. REFER TO DETAIL 2 ON SHEET 00-S-103.
3. REINFORCEMENT CLEAR COVER TO BE 2" EF FOR WALLS, 2" AT TOP OF SLABS, AND 3" AT BOTTOM OF SLABS, TYP., UNO
4. ALL LAP SPLICES TO BE CLASS B PER DETAIL 1/00-S-101.
5. REFER TO MECHANICAL DRAWINGS FOR SIZE AND LOCATIONS OF PIPE PENETRATIONS AND WALL OPENINGS. SEE DETAIL 9/00-S-101 FOR TYPICAL REINFORCEMENT REQUIREMENTS. COORDINATE PIPE PENETRATION SEAL WITH MECHANICAL EOR (WHERE OCCURS).
6. SUBMIT EQUIPMENT WEIGHT FOR REVIEW PRIOR TO INSTALLATION. SEE DETAIL 1/00-S-105 FOR TYPICAL EQUIPMENT PADS. LOCATION & SIZE OF EQUIPMENT PADS TO BE COORDINATED WITH MECHANICAL/ ELECTRICAL/ PLUMBING DRAWINGS. EQUIPMENT ANCHORAGE PER PROJECT SPECIFICATIONS.
7. PROVIDE COMPLETE DESIGN PACKAGE FOR FRP RAILING SIGNED BY A REGISTERED PROFESSIONAL ENGINEER FOR REVIEW. CARE TO BE TAKEN TO NOT HIT REINFORCEMENT. REFER TO DETAIL 5/00-S-104 FOR SIMILAR CONDITIONS. COORDINATE WITH FRP SPECIFICATION 06 74 15.

12' 6' 0' 1' 2' 3' 4' 5'
1/2" = 1'-0"

90% SUBMITTAL - NOT FOR CONSTRUCTION

NO.	BY	CHK	APP	DATE	REVISIONS AND RECORD OF USE

REGISTERED PROFESSIONAL ENGINEER
CHARLES R. ASHLEY JR.
S 5258
STRUCTURAL
STATE OF CALIFORNIA

Ashley&Vance ENGINEERING, INC

JOINT VENTURE

BLACK&VEATCH

FILANC

CITY OF MORRO BAY
FILANC BLACK & VEATCH DB PROPOSAL
MORRO BAY WRF

CHEMICAL FACILITY
STRUCTURAL
SECTIONS & DETAILS

DESIGNED: C. TAYLOR
DETAILED: S. BENJAMIN
CHECKED: I. SHOEBRIDGE
APPROVED: C. ASHLEY
DATE:

0 1/2 1
IF THIS BAR DOES NOT MEASURE 1" THEN DRAWING IS NOT TO FULL SCALE

PROJECT NO.
400530

90-S-302
SHEET
OF

PLOTTED: 3/24/2020 1:35:38 PM
D400530

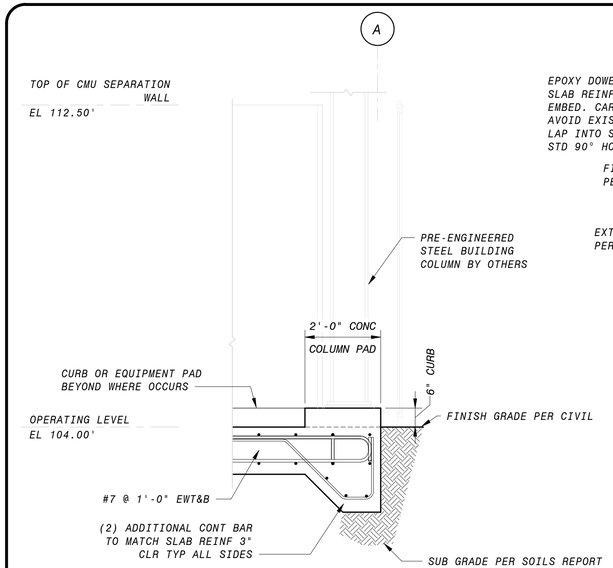

SEE SHEET 00-SS-107 FOR ADDITIONAL REINFORCEMENT AT COUMN ANCHORAGE.

1 SECTION
90-S-101 1/2" = 1'-0"

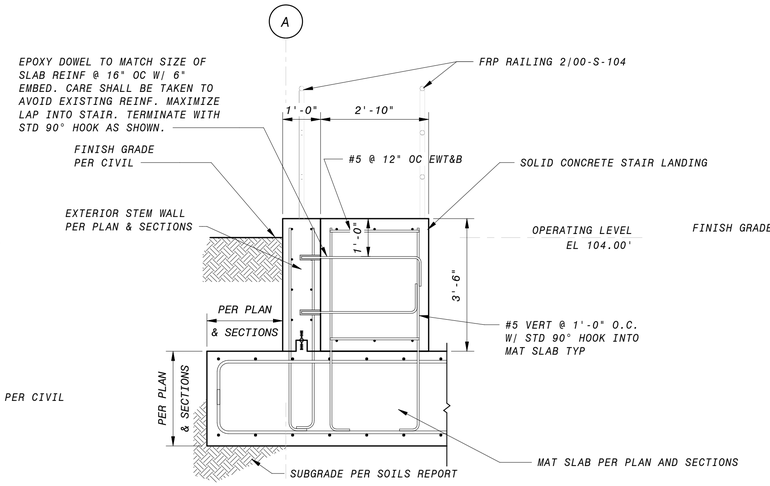

2 SECTION
90-S-101 1/2" = 1'-0"

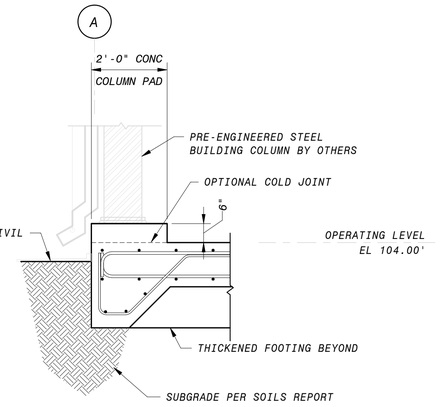

SEE SHEET 00-SS-107 FOR ADDITIONAL REINFORCEMENT AT COLUMN ANCHORAGE

3 SECTION
90-S-101 1/2" = 1'-0"

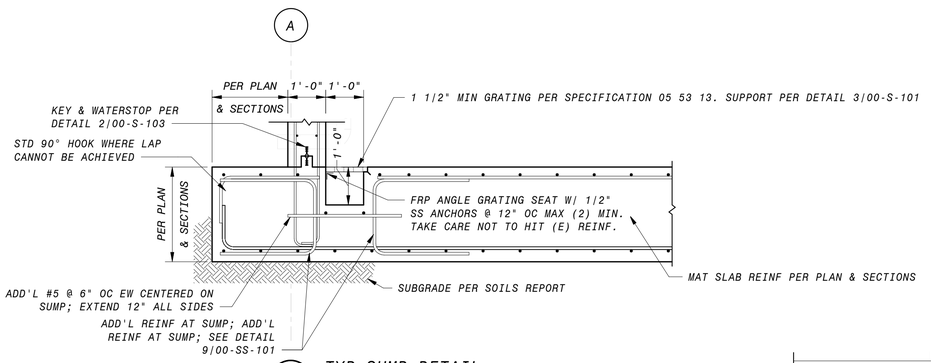

5 TYP SUMP DETAIL
90-S-302 1/2" = 1'-0"

3

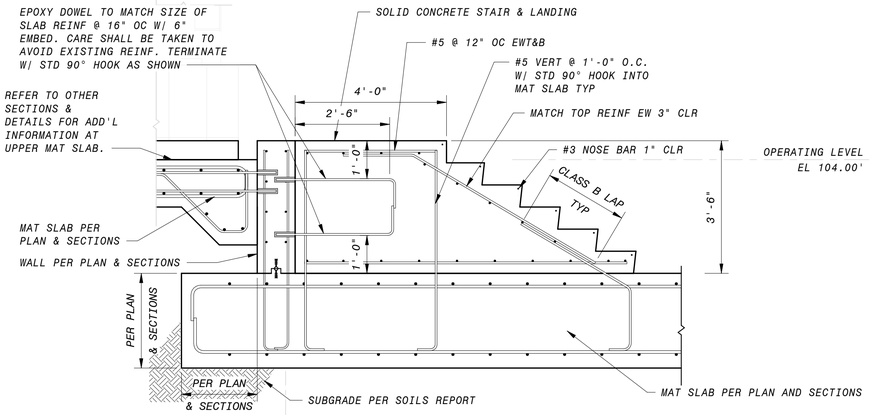

4 SECTION
90-S-101 1/2" = 1'-0"

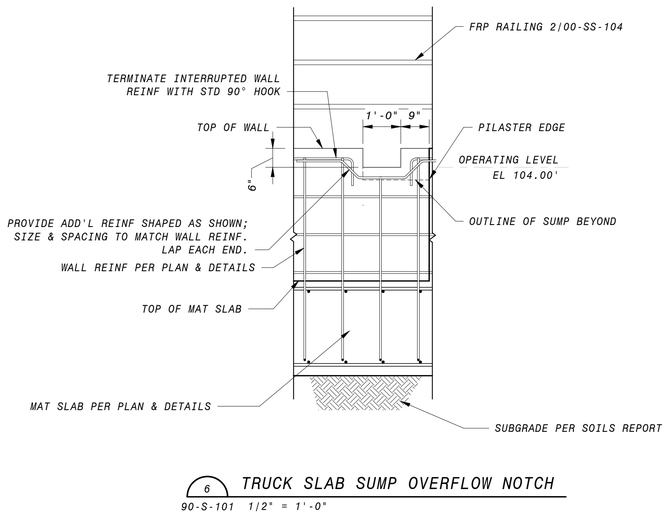

6 TRUCK SLAB SUMP OVERFLOW NOTCH
90-S-101 1/2" = 1'-0"

GENERAL SECTION NOTES

1. FOR GENERAL STRUCTURAL NOTES, SEE SHEETS 00-S-002 AND STANDARD SPECIFICATIONS.
2. AT WALLS 12" THICK OR LESS, PROVIDE A 6" WATERSTOP, UNO. AT WALLS GREATER THAN 12" THICK, PROVIDE A 9" WATERSTOP, UNO. REFER TO DETAIL 2 ON SHEET 00-S-103.
3. REINFORCEMENT CLEAR COVER TO BE 2" EF FOR WALLS, 2" AT TOP OF SLABS, AND 3" AT BOTTOM OF SLABS, TYP., UNO
4. ALL LAP SPLICES TO BE CLASS B PER DETAIL 1/00-S-101.
5. REFER TO MECHANICAL DRAWINGS FOR SIZE AND LOCATIONS OF PIPE PENETRATIONS AND WALL OPENINGS. SEE DETAIL 9/00-S-101 FOR TYPICAL REINFORCEMENT REQUIREMENTS. COORDINATE PIPE PENETRATION SEAL WITH MECHANICAL EOR (WHERE OCCURS).
6. SUBMIT EQUIPMENT WEIGHT FOR REVIEW PRIOR TO INSTALLATION. SEE DETAIL 1/00-S-105 FOR TYPICAL EQUIPMENT PADS. LOCATION & SIZE OF EQUIPMENT PADS TO BE COORDINATED WITH MECHANICAL/ ELECTRICAL/ PLUMBING DRAWINGS. EQUIPMENT ANCHORAGE PER PROJECT SPECIFICATIONS.
7. PROVIDE COMPLETE DESIGN PACKAGE FOR FRP RAILING SIGNED BY A REGISTERED PROFESSIONAL ENGINEER FOR REVIEW. CARE TO BE TAKEN TO NOT HIT REINFORCEMENT. REFER TO DETAIL 5/00-S-104 FOR SIMILAR CONDITIONS. COORDINATE WITH FRP SPECIFICATION 06 74 15

12' 6' 0' 1' 2' 3' 4' 5'
1/2" = 1'-0"

90% SUBMITTAL - NOT FOR CONSTRUCTION

NO.	BY	CHK	APP	DATE	REVISIONS AND RECORD OF USE

REGISTERED PROFESSIONAL ENGINEER CHARLES R. ASHLEY JR. S 5258 STRUCTURAL STATE OF CALIFORNIA

Ashley & Vance ENGINEERING, INC
JOINT VENTURE
BLACK & VEATCH
FILANC

CITY OF MORRO BAY
FILANC BLACK & VEATCH DB PROPOSAL
MORRO BAY WRF

CHEMICAL FACILITY
STRUCTURAL
SECTIONS & DETAILS

DESIGNED: C. TAYLOR
DETAILED: S. BENJAMIN
CHECKED: I. SHOEBRIDGE
APPROVED: C. ASHLEY
DATE:

0 1/2 1
IF THIS BAR DOES NOT MEASURE 1" THEN DRAWING IS NOT TO FULL SCALE

PROJECT NO. 400530

90-S-303
SHEET OF

PLOTTED: 3/24/2020 1:35:38 PM
D400530

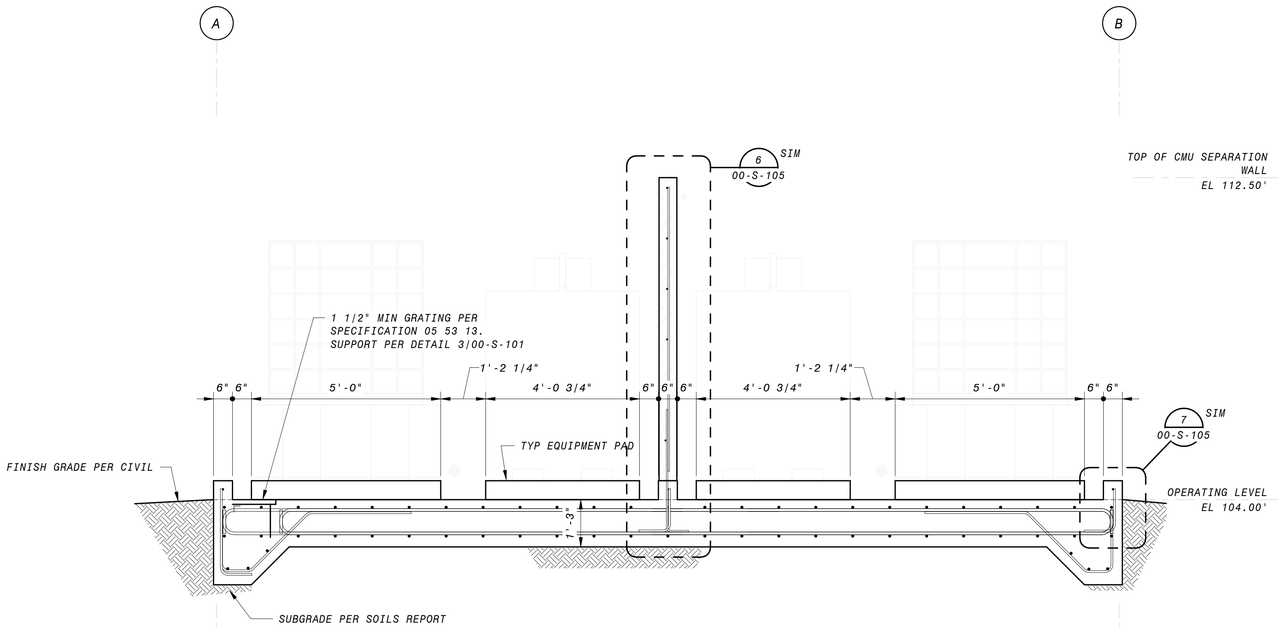

1 Section 16
00-S-105 1/2" = 1'-0"

GENERAL SECTION NOTES

1. FOR GENERAL STRUCTURAL NOTES, SEE SHEETS 00-S-002 AND STANDARD SPECIFICATIONS.
2. AT WALLS 12" THICK OR LESS, PROVIDE A 6" WATERSTOP, UNO. AT WALLS GREATER THAN 12" THICK, PROVIDE A 9" WATERSTOP, UNO. REFER TO DETAIL 2 ON SHEET 00-S-103.
3. REINFORCEMENT CLEAR COVER TO BE 2" EF FOR WALLS, 2" AT TOP OF SLABS, AND 3" AT BOTTOM OF SLABS, TYP.,UNO
4. ALL LAP SPLICES TO BE CLASS B PER DETAIL 1/00-S-101.
5. REFER TO MECHANICAL DRAWINGS FOR SIZE AND LOCATIONS OF PIPE PENETRATIONS AND WALL OPENINGS. SEE DETAIL 9/00-S-101 FOR TYPICAL REINFORCEMENT REQUIREMENTS. COORDINATE PIPE PENETRATION SEAL WITH MECHANICAL EOR (WHERE OCCURS).
6. SUBMIT EQUIPMENT WEIGHT FOR REVIEW PRIOR TO INSTALLATION. SEE DETAIL 1/00-S-105 FOR TYPICAL EQUIPMENT PADS. LOCATION & SIZE OF EQUIPMENT PADS TO BE COORDINATED WITH MECHANICAL/ ELECTRICAL/ PLUMBING DRAWINGS. EQUIPMENT ANCHORAGE PER PROJECT SPECIFICATIONS.
7. FOR TYPICAL MAT SLAB EDGE, REFER TO DETAIL 13/00-S-102.
8. PROVIDE COMPLETE DESIGN PACKAGE FOR FRP RAILING SIGNED BY A REGISTERED PROFESSIONAL ENGINEER FOR REVIEW. CARE TO BE TAKEN TO NOT HIT REINFORCEMENT. REFER TO DETAIL 5/00-S-104 FOR SIMILAR CONDITIONS. COORDINATE WITH FRP SPECIFICATION 06 74 15.
9. ALL SLAB REINFORCEMENT MUST TERMINATE WITH A STANDARD 90° HOOK PER DETAIL 5/00-S-101.

90% SUBMITTAL - NOT FOR CONSTRUCTION

NO.	BY	CHK	APP	DATE	REVISIONS AND RECORD OF USE

REGISTERED PROFESSIONAL ENGINEER
CHARLES R. ASHLEY JR.
S 5258
STRUCTURAL
STATE OF CALIFORNIA

Ashley & Vance ENGINEERING, INC
JOINT VENTURE
BLACK & VEATCH
FILANC

CITY OF MORRO BAY
FILANC BLACK & VEATCH DB PROPOSAL
MORRO BAY WRF

CHEMICAL FACILITY
STRUCTURAL
SECTIONS & DETAILS

DESIGNED: C. TAYLOR
DETAILED: S. BENJAMIN
CHECKED: I. SHOEBRIDGE
APPROVED: C. ASHLEY
DATE:

0 1/2 1
IF THIS BAR DOES NOT MEASURE 1" THEN DRAWING IS NOT TO FULL SCALE

PROJECT NO.
400530

90-S-304
SHEET
OF

PLOTTED: 3/24/2020 1:35:38 PM
D400530

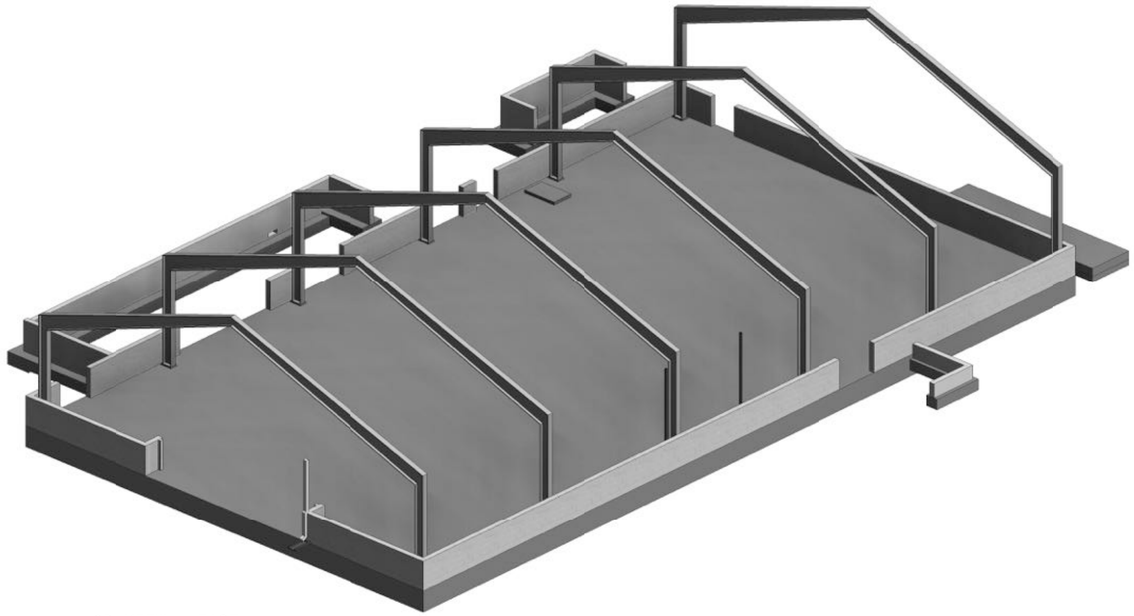

3D VIEW - EAST

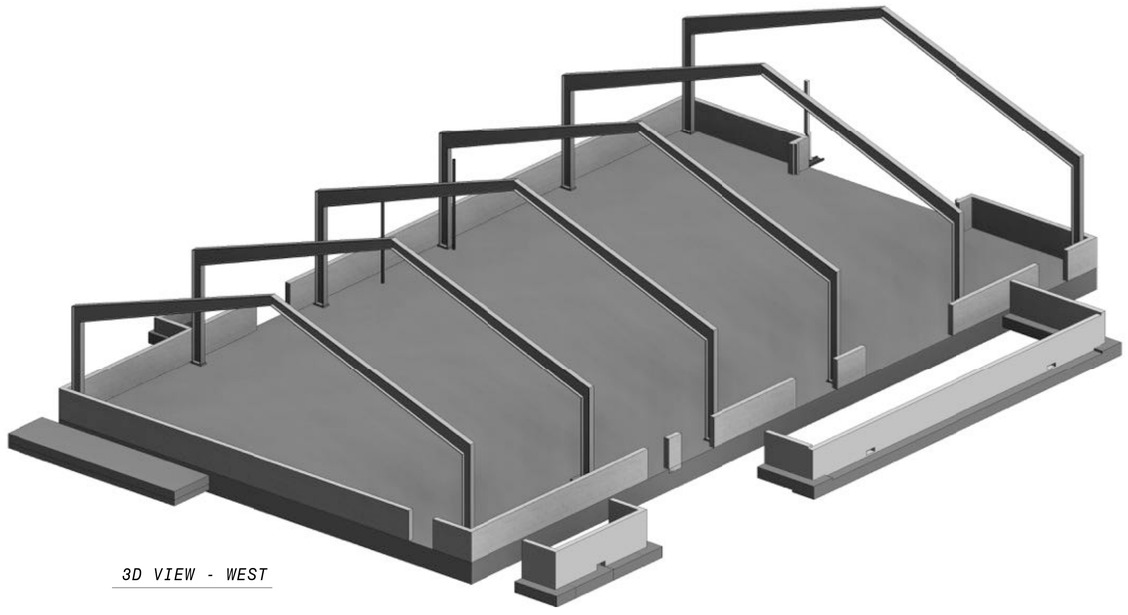

3D VIEW - WEST

90% SUBMITTAL - NOT FOR CONSTRUCTION

NO.	BY	CHK	APP	DATE	REVISIONS AND RECORD OF USE

REGISTERED PROFESSIONAL ENGINEER
CHARLES R. ASHLEY JR.
S 5258
STRUCTURAL
STATE OF CALIFORNIA

Ashley & Vance ENGINEERING, INC

BLACK & VEATCH

JOINT VENTURE

FILANC

CITY OF MORRO BAY
FILANC BLACK & VEATCH DB PROPOSAL
WATER RECLAMATION FACILITY (WRF)

OPERATIONS BUILDING
STRUCTURAL
3D VIEWS

DESIGNED:	M. MARSH
DETAILED:	S. BENJAMIN
CHECKED:	I. SHOEBRIDGE
APPROVED:	C. ASHLEY
DATE:	XX/XX/XXXX

0 1/2 1

IF THIS BAR DOES NOT MEASURE 1" THEN DRAWING IS NOT TO FULL SCALE

PROJECT NO.
400530

95-S-001
SHEET
OF XXX

PLOTTED: 3/24/2020 10:58:05 AM
D400530

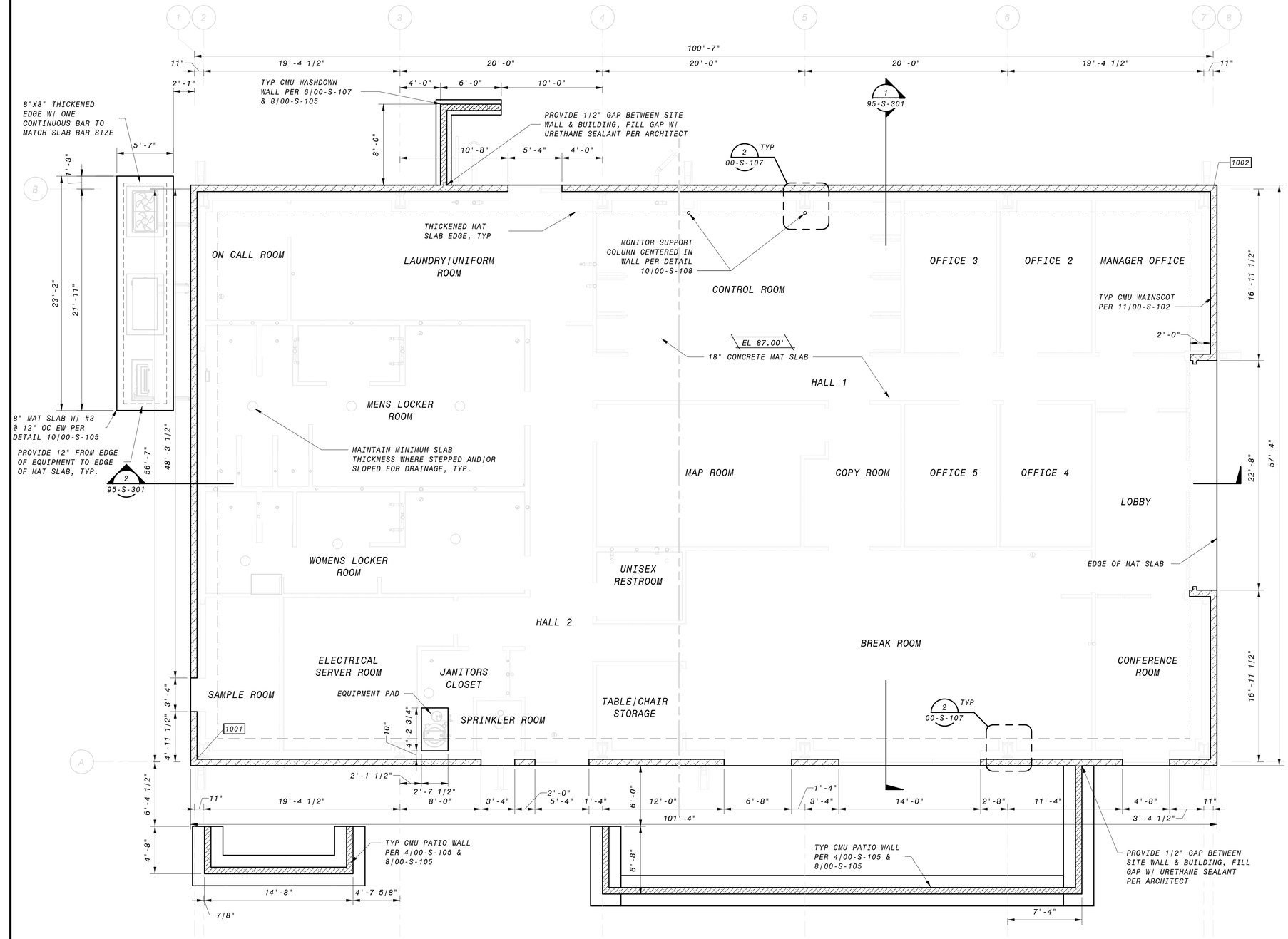

OPERATING FLOOR PLAN

3/16" = 1'-0"

NOTES:

1. *DESIGN AND DRAWINGS FOR STEEL FRAME PRE-ENGINEERED METAL BUILDING TO BE PROVIDED BY BUILDING MFR. SEE SPECIFICATIONS FOR DESIGN CRITERIA.*
2. *FOUNDATION DESIGN HAS BEEN BASED ON THE FOLLOWING FRAME REACTIONS, ASSUMING A PINNED COLUMN BASE:*

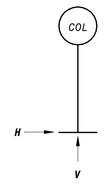

LOAD	VERTICAL V (K)	HORIZONTAL H (K)
DEAD	6.0	0.5
ROOF LIVE	10.5	1.5
SEISMIC	16.5	8.0
WIND (MAX)	7.5	7.0
WIND (MIN)	-21.5	-3.5

3. *FOUNDATION HAS BEEN DESIGNED FOR A LIVE LOAD OF 100 PSF.*
4. *FRAME REACTIONS INCLUDE BOTH PRINCIPLE DIRECTIONS AND ORTHOGONAL COMBINATION EFFECTS.*

GENERAL NOTES

1. *PLEASE SEE SOILS REPORT FOR ADDITIONAL SPECIFICATIONS AND RECOMMENDATIONS. IT IS THE DESIGN-BUILDER'S RESPONSIBILITY TO OBTAIN A COPY OF THE SOILS REPORT FROM THE OWNER OR OWNERS REPRESENTATIVE.*
2. *NOT USED.*
3. *FOR GENERAL STRUCTURAL NOTES, SEE SHEETS 00-S-002 AND STANDARD SPECIFICATIONS.*
4. *VERIFY ALL DIMENSIONS PRIOR TO COMMENCEMENT OF CONSTRUCTION.*
5. *ALL LAP SPLICES TO BE CLASS B PER DETAIL 1/00-S-101*
6. *SUBMIT EQUIPMENT WEIGHT FOR REVIEW PRIOR TO INSTALLATION. SEE DETAIL 1/00-S-105 FOR TYPICAL INTERIOR EQUIPMENT PADS AND DETAIL 10/00-S-105 FOR TYPICAL EXTERIOR EQUIPMENT PADS. LOCATION AND SIZE OF EQUIPMENT PADS TO BE COORDINATED WITH MECHANICAL/ELECTRICAL/PLUMBING DRAWINGS. EQUIPMENT ANCHORAGE PER PROJECT SPECIFICATIONS.*
7. *REFER TO MECHANICAL/ELECTRICAL/PLUMBING DRAWINGS FOR SIZE AND LOCATIONS OF PIPE PENETRATIONS AND WALL OPENINGS. SEE DETAIL 9/00-S-101 FOR TYPICAL REINFORCEMENT REQUIREMENTS. COORDINATE PIPE PENETRATION SEAL WITH MECHANICAL ENGINEER OF RECORD.*
8. *COORDINATE LOCATION AND DETAILING FOR ATTACHMENT OF MECHANICAL SUPPORTS WITH BUILDING MANUFACTURER AND MECHANICAL ENGINEER OF RECORD PRIOR TO INSTALLATION.*
9. *COORDINATE ALL INTERIOR WALLS WITH ARCHITECTURAL DRAWINGS. SEE SHEET 00-S-106 AND PROJECT SPECIFICATIONS FOR ADDITIONAL INFORMATION*
10. *COORDINATE COLUMN SIZE, LOCATION, AND ATTACHMENT WITH BUILDING MANUFACTURER PRIOR TO INSTALLATION.*
11. *IF SPLICES RESULT IN CLEAR SPACING LESS THAN ACI CODE MINIMUMS, PROVIDE TYPE 2 MECHANICAL SPLICES. MECHANICAL CONNECTORS SHALL BE SUBMITTED FOR REVIEW AND APPROVAL.*
12. *SUBGRADE FOR MAT SLAB SHOULD BE PREPARED PER SOILS REPORT & DETAIL 2/00-S-102*

6" 4' 2' 0' 5' 10'

3/16" = 1'-0"

90% SUBMITTAL - NOT FOR CONSTRUCTION

NO.	BY	CHK	APP	DATE	REVISIONS AND RECORD OF USE

REGISTERED PROFESSIONAL ENGINEER CHARLES R. ASHLEY JR. S 5258 STRUCTURAL STATE OF CALIFORNIA

Ashley & Vance ENGINEERING, INC | JOINT VENTURE | BLACK & VEATCH | FILANC

CITY OF MORRO BAY
FILANC BLACK & VEATCH DB PROPOSAL
WATER RECLAMATION FACILITY (WRF)

OPERATIONS BUILDING
STRUCTURAL
FLOOR PLAN

DESIGNED: M. MARSH
DETAILED: S. BENJAMIN
CHECKED: I. SHOEBRIDGE
APPROVED: C. ASHLEY
DATE: XX/XX/XXXX

0 1/2 1

IF THIS BAR DOES NOT MEASURE 1" THEN DRAWING IS NOT TO FULL SCALE

PROJECT NO. 400530

95-S-101
SHEET OF XXX

PLOTTED: 3/24/2020 10:58:08 AM
D400530

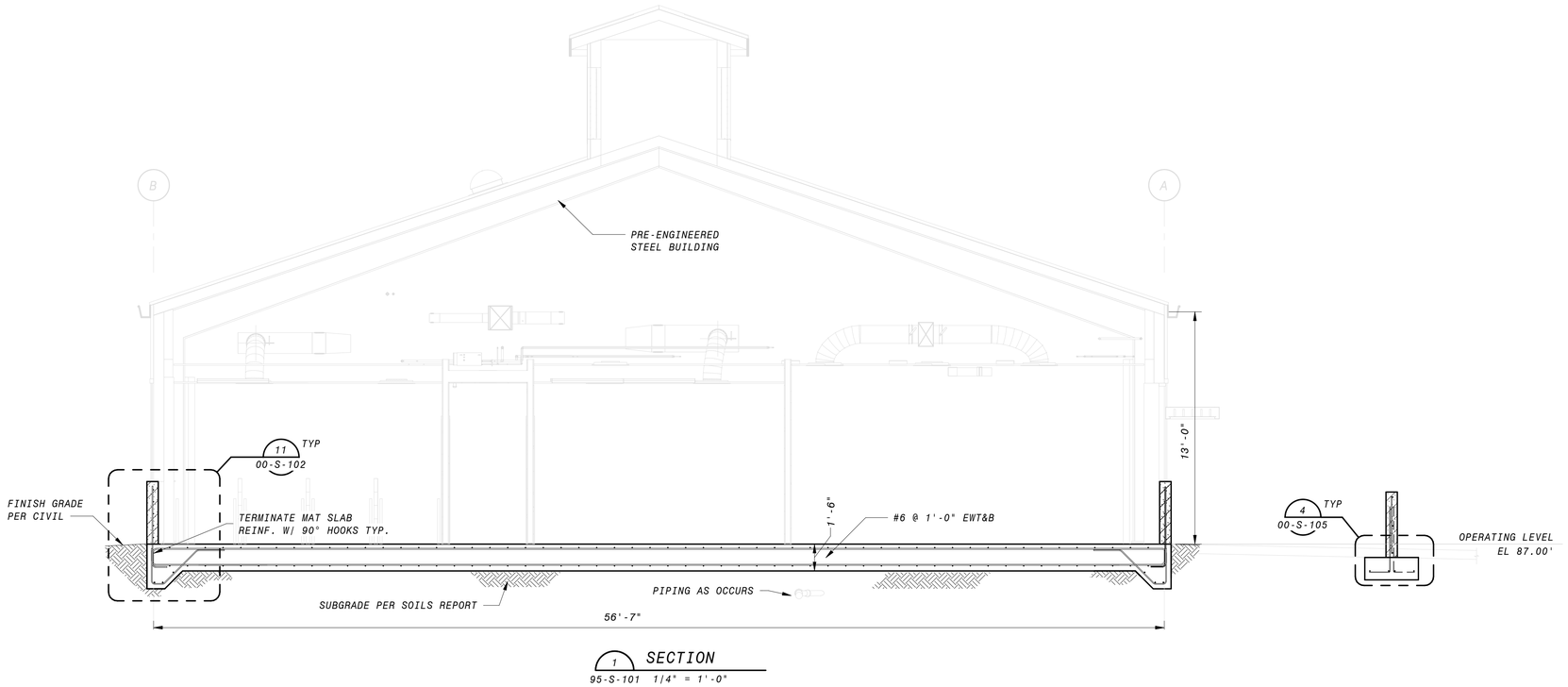

1 SECTION
95-S-101 1/4" = 1'-0"

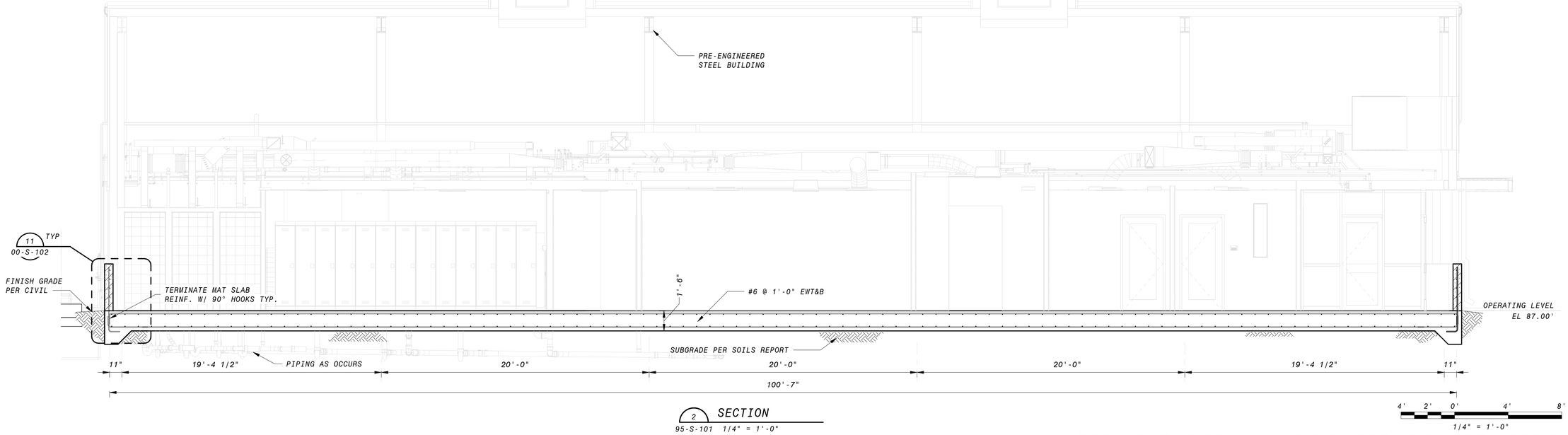

2 SECTION
95-S-101 1/4" = 1'-0"

GENERAL SECTION NOTES

1. FOR GENERAL STRUCTURAL NOTES, SEE SHEETS 00-S-002 AND STANDARD SPECIFICATIONS.
2. REINFORCEMENT CLEAR COVER TO BE 2" EF FOR WALLS, 2" AT TOP OF SLABS, AND 3" AT BOTTOM OF SLABS, TYP., UNO
3. ALL LAP SPLICES TO BE CLASS B PER DETAIL 1/00-S-101.
4. REFER TO MECHANICAL DRAWINGS FOR SIZE AND LOCATIONS OF PIPE PENETRATIONS AND WALL OPENINGS. SEE DETAIL 9/00-S-101 FOR TYPICAL REINFORCEMENT REQUIREMENTS. COORDINATE PIPE PENETRATION SEAL WITH MECHANICAL EOR (WHERE OCCURS).
5. SUBMIT EQUIPMENT WEIGHT FOR REVIEW PRIOR TO INSTALLATION.SEE DETAIL 1/00-S-105 FOR TYPICAL INTERIOR EQUIPMENT PADS AND DETAIL 10/00-S-105 FOR TYPICAL EXTERIOR EQUIPMENT PADS. LOCATION AND SIZE OF EQUIPMENT PADS TO BE COORDINATED WITH CHANICAL/ELECTRICAL/PLUMBING DRAWINGS. EQUIPMENT ANCHORAGE PER PROJECT SPECIFICATIONS.
6. COORDINATE LOCATION AND DETAILING FOR ATTACHMENT OF MECHANICAL SUPPORTS WITH BUILDING MANUFACTURER AND MECHANICAL ENGINEER OF RECORD PRIOR TO INSTALLATION.
7. COORDINATE ALL INTERIOR WALLS WITH ARCHITECTURAL DRAWINGS. SEE SHEET 00-S-106 AND PROJECT SPECIFICATIONS FOR ADDITIONAL INFORMATION

90% SUBMITTAL - NOT FOR CONSTRUCTION

NO.	BY	CHK	APP	DATE	REVISIONS AND RECORD OF USE

REGISTERED PROFESSIONAL ENGINEER
CHARLES R. ASHLEY JR.
S 5258
STRUCTURAL
STATE OF CALIFORNIA

Ashley & Vance ENGINEERING, INC
JOINT VENTURE
BLACK & VEATCH
FILANC

CITY OF MORRO BAY
FILANC BLACK & VEATCH DB PROPOSAL
WATER RECLAMATION FACILITY (WRF)

OPERATIONS BUILDING
STRUCTURAL
SECTIONS & DETAILS

DESIGNED: M. MARSH
DETAILED: S. BENJAMIN
CHECKED: I. SHOEBRIDGE
APPROVED: C. ASHLEY
DATE: XX/XX/XXXX

0 1/2 1
IF THIS BAR DOES NOT MEASURE 1" THEN DRAWING IS NOT TO FULL SCALE

PROJECT NO.
400530

95-S-301
SHEET
OF XXX

PLOTTED: 3/24/2020 10:58:11 AM
D400530

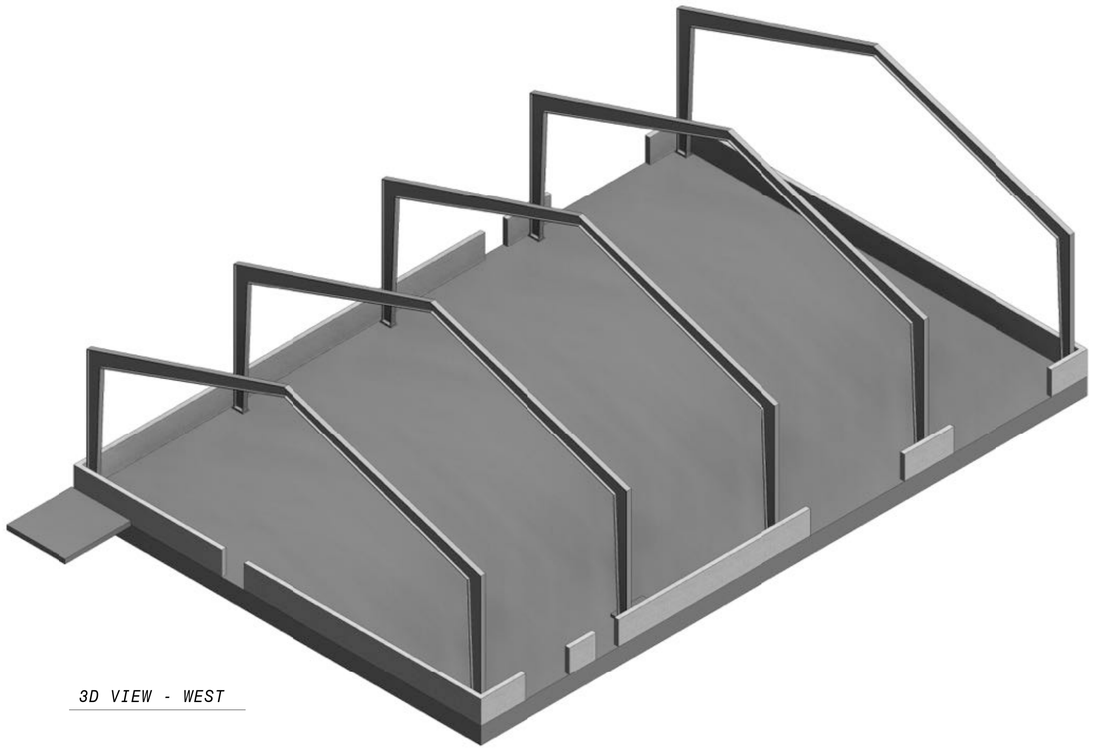

3D VIEW - WEST

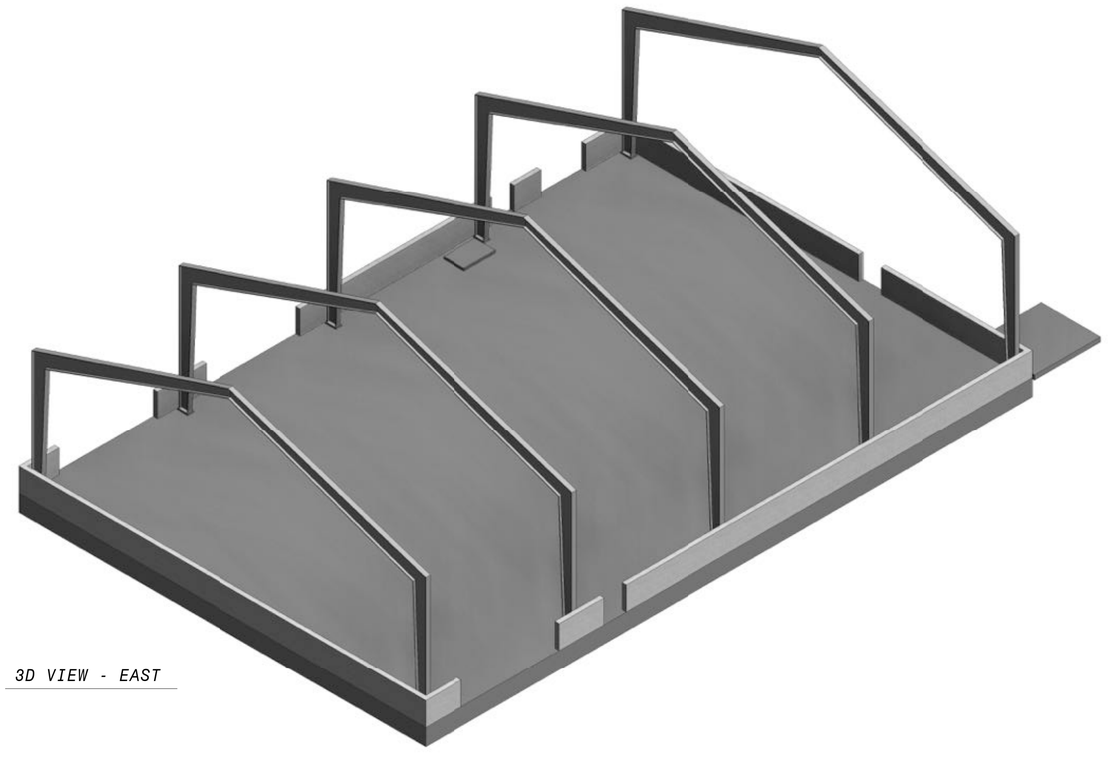

3D VIEW - EAST

90% SUBMITTAL - NOT FOR CONSTRUCTION

NO.	BY	CHK	APP	DATE	REVISIONS AND RECORD OF USE

REGISTERED PROFESSIONAL ENGINEER
CHARLES R. ASHLEY JR.
S 5258
STRUCTURAL
STATE OF CALIFORNIA

Ashley & Vance ENGINEERING, INC
JOINT VENTURE
FILANC
BLACK & VEATCH

CITY OF MORRO BAY
MORRO BAY WRF
WATER RECLAMATION FACILITY (WRF)

MAINTENANCE BUILDING
STRUCTURAL
3D VIEWS

DESIGNED: M. MARSH
DETAILED: S. BENJAMIN
CHECKED: I. SHOEBRIDGE
APPROVED: C. ASHLEY
DATE: XX/XX/XXXX

0 1/2 1
IF THIS BAR DOES NOT MEASURE 1" THEN DRAWING IS NOT TO FULL SCALE

PROJECT NO.
400530

96-S-001
SHEET
OF XXX

PLOTTED: 3/24/2020 1:39:24 PM
D400530

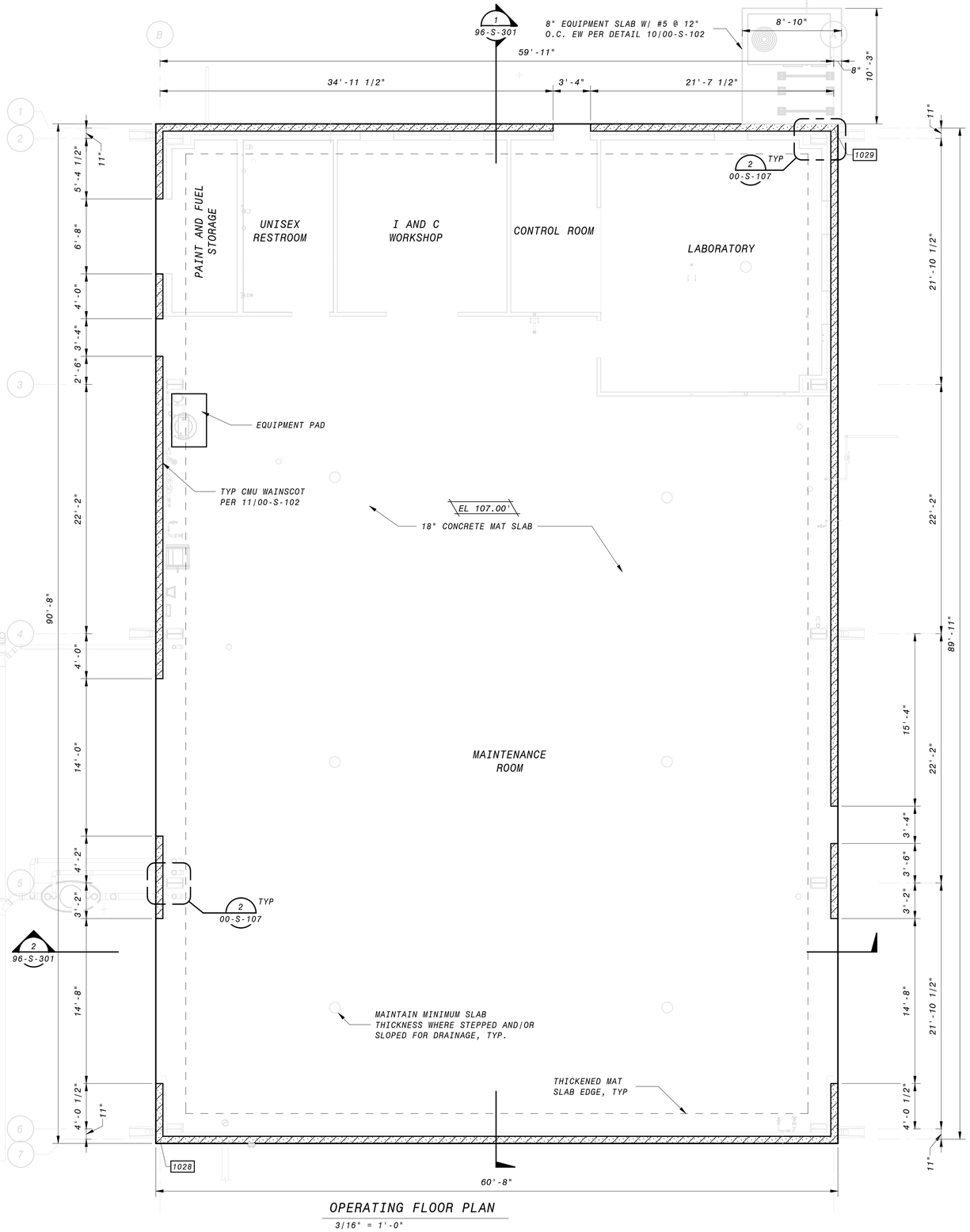

OPERATING FLOOR PLAN

3/16" = 1'-0"

NOTES:

1. DESIGN AND DRAWINGS FOR STEEL FRAME PRE-ENGINEERED METAL BUILDING TO BE PROVIDED BY BUILDING MFR. SEE SPECIFICATIONS FOR DESIGN CRITERIA.
2. FOUNDATION DESIGN HAS BEEN BASED ON THE FOLLOWING FRAME REACTIONS, ASSUMING A PINNED COLUMN BASE:

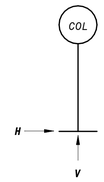

LOAD	VERTICAL V (K)	HORIZONTAL H (K)
DEAD	7.5	1.0
ROOF LIVE	12.5	3.0
SEISMIC	20.0	7.5
WIND (MAX)	13.5	11.0
WIND (MIN)	-25.5	-6.0

3. FOUNDATION HAS BEEN DESIGNED FOR A LIVE LOAD OF 150 PSF.
4. FRAME REACTIONS INCLUDE BOTH PRINCIPLE DIRECTIONS AND ORTHOGONAL COMBINATION EFFECTS.

GENERAL NOTES

1. PLEASE SEE SOILS REPORT FOR ADDITIONAL SPECIFICATIONS AND RECOMMENDATIONS. IT IS THE DESIGN-BUILDER'S RESPONSIBILITY TO OBTAIN A COPY OF THE SOILS REPORT FROM THE OWNER OR OWNERS REPRESENTATIVE.
2. NOT USED.
3. FOR GENERAL STRUCTURAL NOTES, SEE SHEETS 00-S-002 AND STANDARD SPECIFICATIONS.
4. VERIFY ALL DIMENSIONS PRIOR TO COMMENCEMENT OF CONSTRUCTION.
5. SEE DETAIL 2/00-S-102 FOR TYP MAT SLAB ON GRADE.
6. ALL LAP SPLICES TO BE CLASS B PER DETAIL 1/00-S-101
7. SUBMIT EQUIPMENT WEIGHT FOR REVIEW PRIOR TO INSTALLATION. SEE DETAIL 1/00-S-105 FOR TYPICAL INTERIOR EQUIPMENT PADS AND DETAIL 10/00-S-105 FOR TYPICAL EXTERIOR EQUIPMENT PADS. LOCATION AND SIZE OF EQUIPMENT PADS TO BE COORDINATED WITH MECHANICAL/ELECTRICAL/PLUMBING DRAWINGS. EQUIPMENT ANCHORAGE PER PROJECT SPECIFICATIONS.
8. REFER TO MECHANICAL/ELECTRICAL/PLUMBING DRAWINGS FOR SIZE AND LOCATIONS OF PIPE PENETRATIONS AND WALL OPENINGS. SEE DETAIL 9/00-S-101 FOR TYPICAL REINFORCEMENT REQUIREMENTS. COORDINATE PIPE PENETRATION SEAL WITH MECHANICAL ENGINEER OF RECORD.
9. COORDINATE LOCATION AND DETAILING FOR ATTACHMENT OF MECHANICAL SUPPORTS WITH BUILDING MANUFACTURER AND MECHANICAL ENGINEER OF RECORD PRIOR TO INSTALLATION.
10. COORDINATE ALL INTERIOR WALLS WITH ARCHITECTURAL DRAWINGS. SEE SHEET 00-S-106 AND PROJECT SPECIFICATIONS FOR ADDITIONAL INFORMATION.
11. COORDINATE COLUMN SIZE, LOCATION, AND ATTACHMENT WITH BUILDING MANUFACTURER PRIOR TO INSTALLATION.
12. IF SPLICES RESULT IN CLEAR SPACING LESS THAN ACI CODE MINIMUMS, PROVIDE TYPE 2 MECHANICAL SPLICES. MECHANICAL CONNECTORS SHALL BE SUBMITTED FOR REVIEW AND APPROVAL.

6" 4' 2' 0' 5' 10'

3/16" = 1'-0"

90% SUBMITTAL - NOT FOR CONSTRUCTION

NO.	DATE	REVISIONS AND RECORD OF USE	BY	CHK'D APP'D

REGISTERED PROFESSIONAL ENGINEER
CHARLES R. ASHLEY JR.
S 5258
STRUCTURAL
STATE OF CALIFORNIA

Ashley & Vance ENGINEERING, INC
JOINT VENTURE
BLACK & VEATCH
FILANC

CITY OF MORRO BAY
MORRO BAY WRF
WATER RECLAMATION FACILITY (WRF)

MAINTENANCE BUILDING
STRUCTURAL
PLAN

DESIGNED: M. MARSH
DETAILED: S. BENJAMIN
CHECKED: I. SHOEBRIDGE
APPROVED: C. ASHLEY
DATE: XX/XX/XXXX

0 1/2 1

IF THIS BAR DOES NOT MEASURE 1" THEN DRAWING IS NOT TO FULL SCALE

PROJECT NO.
400530

96-S-101
SHEET
OF XXX

PLOTTED: 3/24/2020 1:39:26 PM
D400530

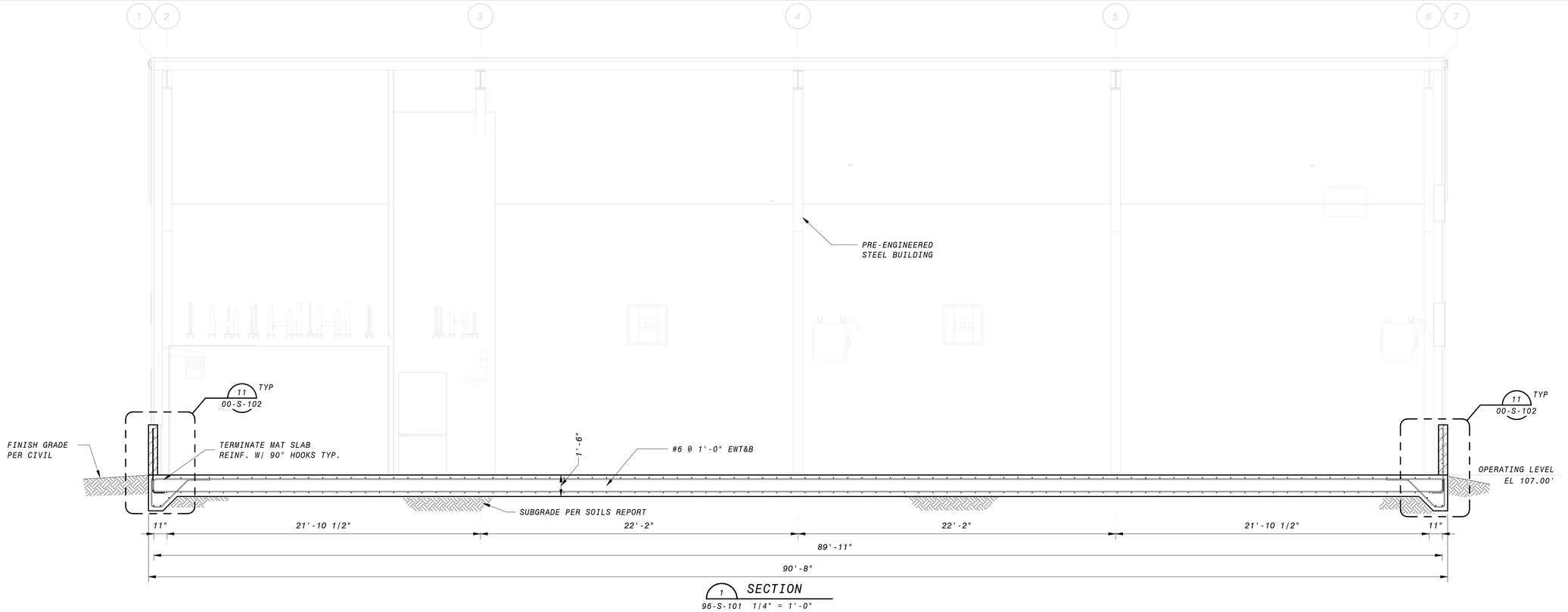

1 SECTION
96-S-101 1/4" = 1'-0"

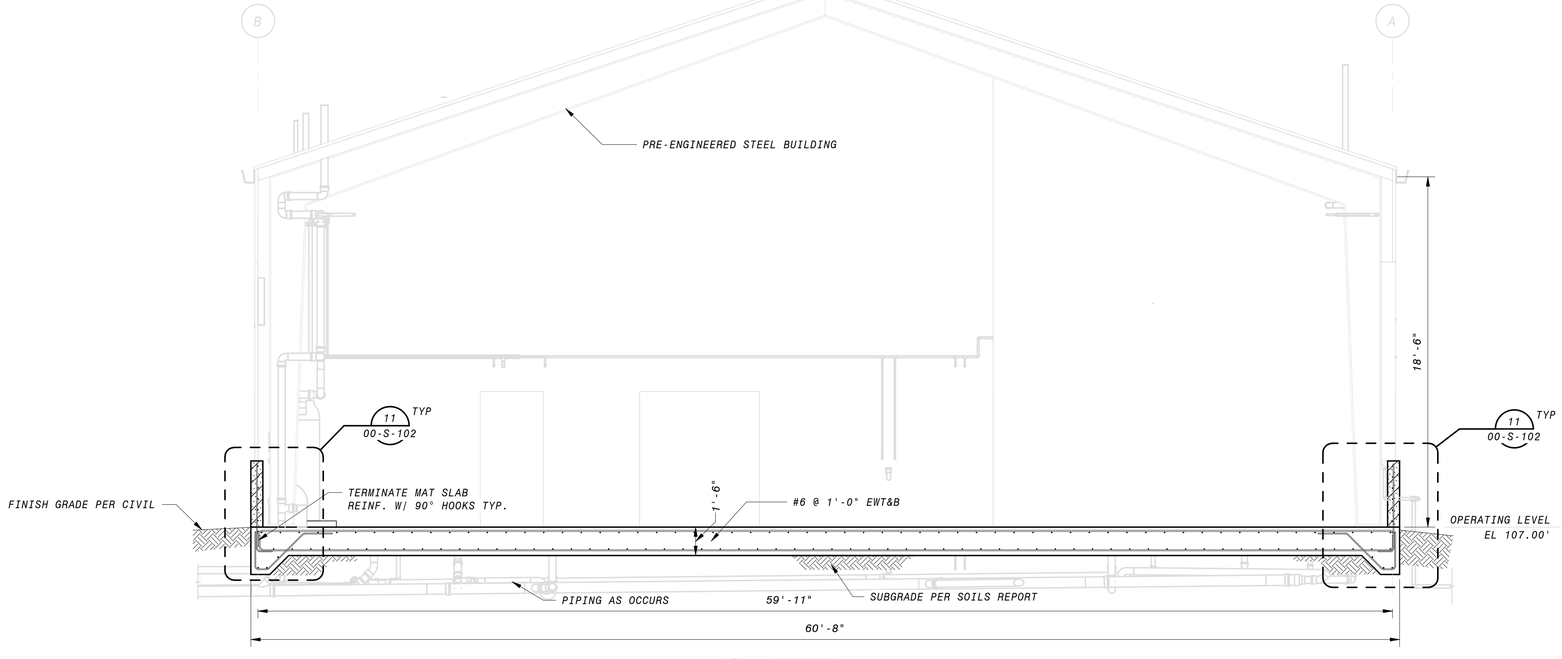

2 SECTION
96-S-101 1/4" = 1'-0"

GENERAL SECTION NOTES

1. FOR GENERAL STRUCTURAL NOTES, SEE SHEETS 00-S-002 AND STANDARD SPECIFICATIONS.
2. REINFORCEMENT CLEAR COVER TO BE 2" EF FOR WALLS, 2" AT TOP OF SLABS, AND 3" AT BOTTOM OF SLABS, TYP., UNO
3. ALL LAP SPLICES TO BE CLASS B PER DETAIL 1/00-S-101.
4. REFER TO MECHANICAL DRAWINGS FOR SIZE AND LOCATIONS OF PIPE PENETRATIONS AND WALL OPENINGS. SEE DETAIL 9/00-S-101 FOR TYPICAL REINFORCEMENT REQUIREMENTS. COORDINATE PIPE PENETRATION SEAL WITH MECHANICAL EOR (WHERE OCCURS).
5. SUBMIT EQUIPMENT WEIGHT FOR REVIEW PRIOR TO INSTALLATION. SEE DETAIL 1/00-S-105 FOR TYPICAL INTERIOR EQUIPMENT PADS AND DETAIL 10/00-S-105 FOR TYPICAL EXTERIOR EQUIPMENT PADS. LOCATION & SIZE OF EQUIPMENT PADS TO BE COORDINATED WITH MECHANICAL/ ELECTRICAL/ PLUMBING DRAWINGS. EQUIPMENT ANCHORAGE PER PROJECT SPECIFICATIONS.
6. COORDINATE ALL INTERIOR WALLS WITH ARCHITECTURAL DRAWINGS. SEE SHEET 00-S-106 AND PROJECT SPECIFICATIONS FOR ADDITIONAL INFORMATION.
7. COORDINATE LOCATION AND DETAILING FOR ATTACHMENT OF MECHANICAL SUPPORTS WITH BUILDING MANUFACTURER AND MECHANICAL ENGINEER OF RECORD PRIOR TO INSTALLATION.

4' 2' 0' 4' 8'
1/4" = 1'-0"

90% SUBMITTAL - NOT FOR CONSTRUCTION

NO.	BY	CHK	APP	DATE	REVISIONS AND RECORD OF USE

REGISTERED PROFESSIONAL ENGINEER
CHARLES R. ASHLEY JR.
S 5258
STRUCTURAL
STATE OF CALIFORNIA

Ashley & Vance ENGINEERING, INC
JOINT VENTURE
BLACK & VEATCH
FILANC

CITY OF MORRO BAY
MORRO BAY WRF
WATER RECLAMATION FACILITY (WRF)

MAINTENANCE BUILDING
STRUCTURAL
SECTIONS & DETAILS 1

DESIGNED: M. MARSH
DETAILED: S. BENJAMIN
CHECKED: I. SHOEBRIDGE
APPROVED: C. ASHLEY
DATE: XX/XX/XXXX

0 1/2 1
IF THIS BAR DOES NOT MEASURE 1" THEN DRAWING IS NOT TO FULL SCALE

PROJECT NO.
400530

96-S-301
SHEET
OF XXX

PLOTTED: 3/24/2020 1:39:28 PM
D400530

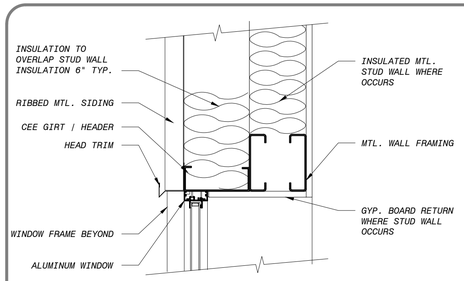

50 WINDOW HEAD
SCALE: 1 1/2" = 1'-0"

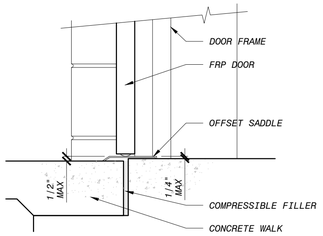

40 FRP DOOR THRESHOLD
SCALE: 1 1/2" = 1'-0"

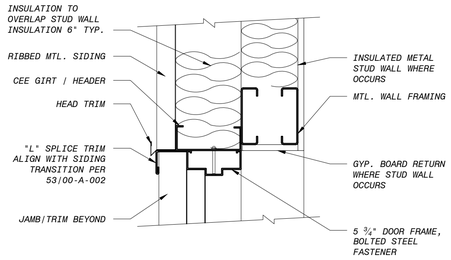

30 FRP DOOR HEAD
SCALE: 1 1/2" = 1'-0"

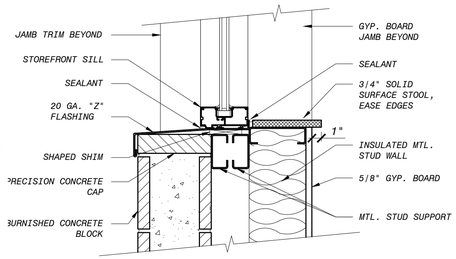

20 STOREFRONT SILL @ CMU
SCALE: 1 1/2" = 1'-0"

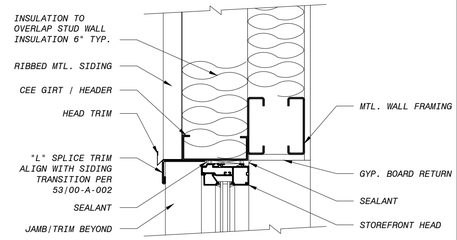

10 STOREFRONT HEAD
SCALE: 1 1/2" = 1'-0"

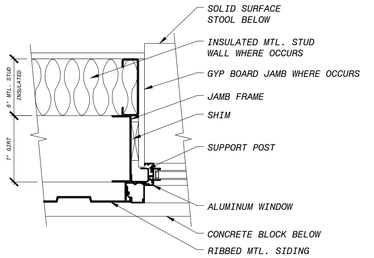

51 WINDOW JAMB
SCALE: 1 1/2" = 1'-0"

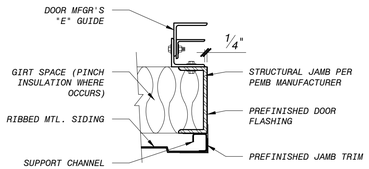

OVERHEAD DOOR JAMB (HEAD SIM.) @ RIBBED SIDING
41
SCALE: 1 1/2" = 1'-0"

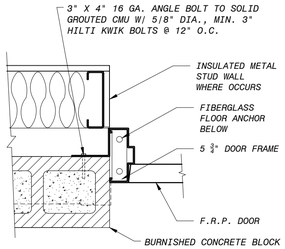

31 FRP DOOR JAMB @ CMU
SCALE: 1 1/2" = 1'-0"

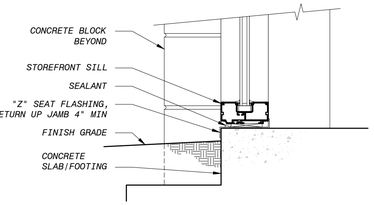

STOREFRONT SILL @ FLOOR
21
SCALE: 1 1/2" = 1'-0"

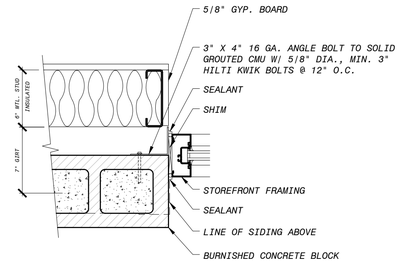

11 STOREFRONT JAMB @ CMU
SCALE: 1 1/2" = 1'-0"

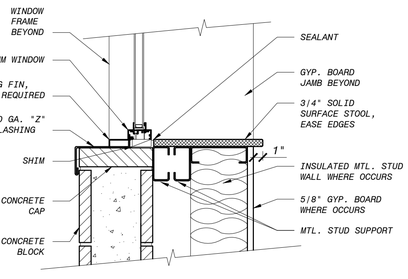

52 WINDOW SILL @ CMU
SCALE: 1 1/2" = 1'-0"

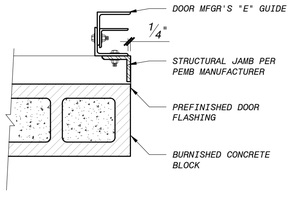

42 ROLLING DOOR @ CMU
SCALE: 1 1/2" = 1'-0"

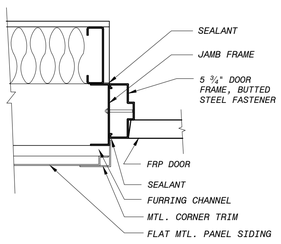

FRP DOOR JAMB @ FLAT PANEL SIDING
32
SCALE: 1 1/2" = 1'-0"

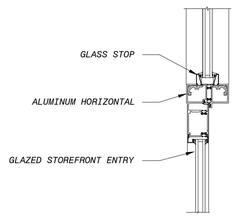

22 STOREFRONT ENTRY HEAD
SCALE: 1 1/2" = 1'-0"

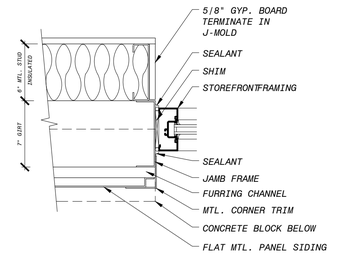

STOREFRONT JAMB @ FLAT PANEL SIDING
12
SCALE: 1 1/2" = 1'-0"

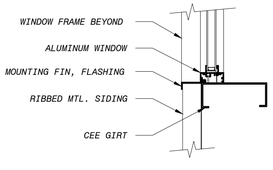

53 WINDOW SILL @ SIDING
SCALE: 1 1/2" = 1'-0"

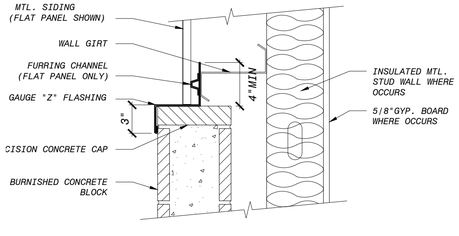

43 MTL. SIDING @ CMU
SCALE: 1 1/2" = 1'-0"

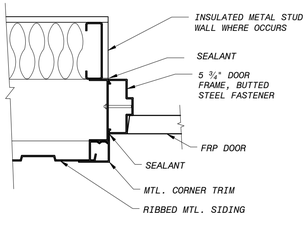

FRP DOOR JAMB @ RIBBED SIDING
33
SCALE: 1 1/2" = 1'-0"

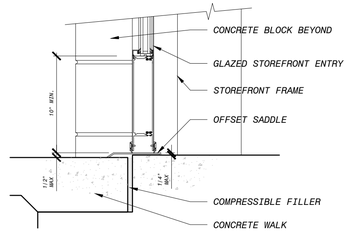

STOREFRONT ENTRY THRESHOLD
23
SCALE: 1 1/2" = 1'-0"

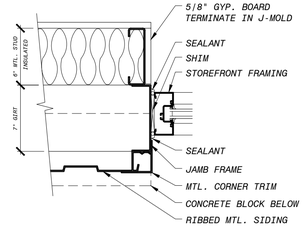

STOREFRONT JAMB @ RIBBED SIDING
13
SCALE: 1 1/2" = 1'-0"

NO.	BY	CHK	APP	DATE	REVISIONS AND RECORD OF USE

LICENSED ARCHITECT
BRUCE DOUGLAS FRASER
C 9787
EXPIRES 12-31-20
STATE OF CALIFORNIA

FRASER SEIPLE ARCHITECTS
JOINT VENTURE
BLACK & VEATCH
FILANC

CITY OF MORRO BAY
MORRO BAY WATER
WATER RECLAMATION FACILITY (WRF)

ARCHITECTURAL
DETAILS
DOOR AND WINDOW DETAILS

DESIGNED: BDF
DETAILED: SS
CHECKED:
APPROVED:
DATE:

0 1/2 1
IF THIS BAR DOES NOT MEASURE 1" THEN DRAWING IS NOT TO FULL SCALE

PROJECT NO.
400530

00-A-001
SHEET
OF

D400530
PLOTTED: 2/28/2020 3:12 PM

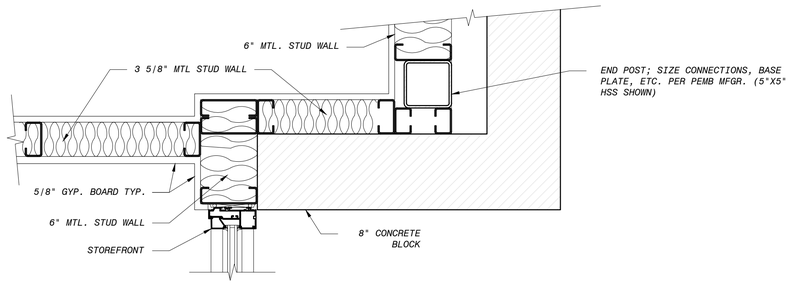

50 ENTRY PLAN / CMU

SCALE: 1 1/2" = 1'-0"

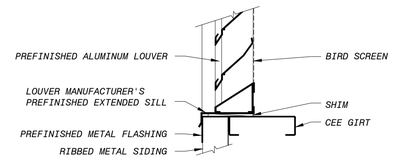

30 LOUVER HEAD

SCALE: 1 1/2" = 1'-0"

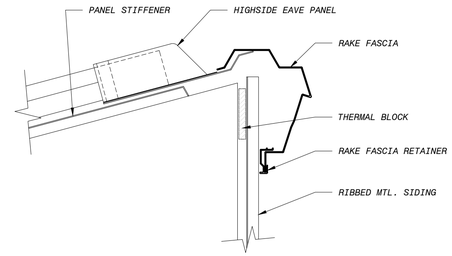

20 HIGH EAVE

SCALE: N.T.S.

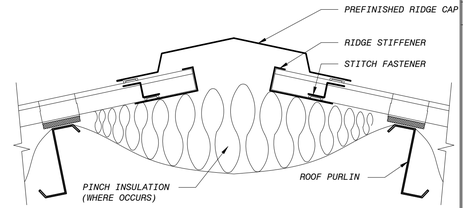

10 RIDGE

SCALE: 1 1/2" = 1'-0"

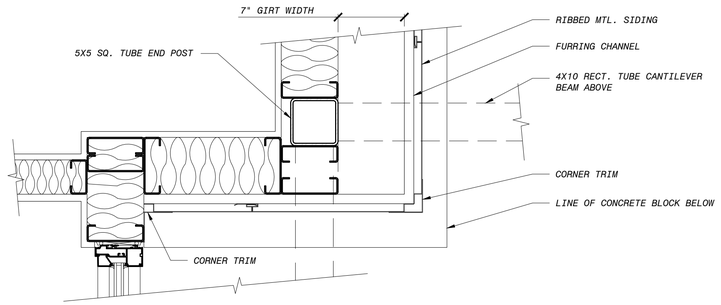

51 ENTRY PLAN / FLAT PANEL SIDING

SCALE: 1 1/2" = 1'-0"

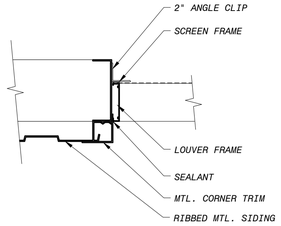

31 LOUVER JAMB

SCALE: 1 1/2" = 1'-0"

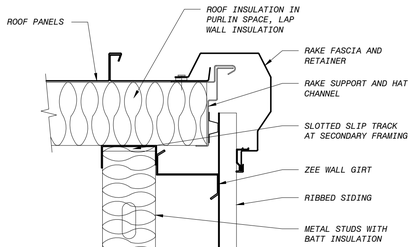

21 RAKE SECTION

SCALE: 1 1/2" = 1'-0"

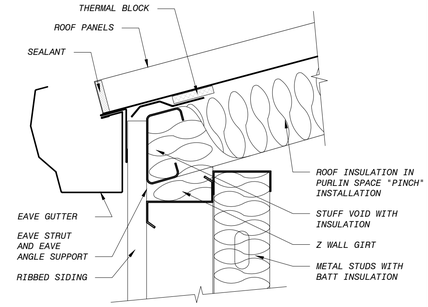

11 EAVE, GUTTER

SCALE: 1 1/2" = 1'-0"

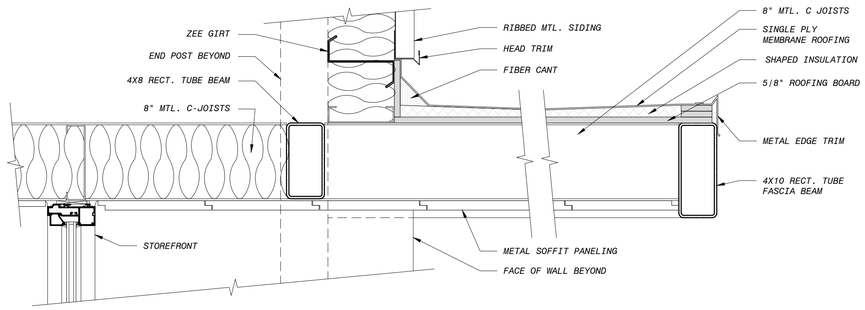

52 ENTRY CANOPY SECTION

SCALE: 1 1/2" = 1'-0"

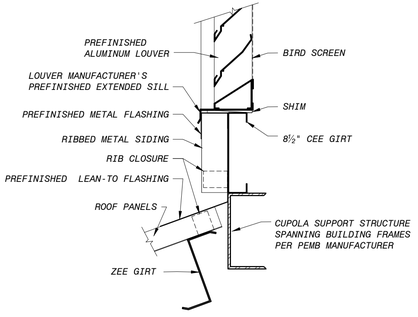

32 LOUVER SILL @ ROOF

SCALE: 1 1/2" = 1'-0"

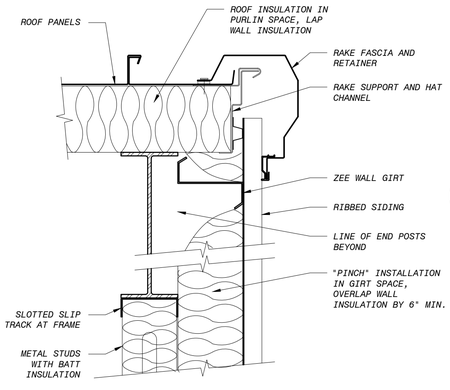

12 EAVE, GUTTER

SCALE: 1 1/2" = 1'-0"

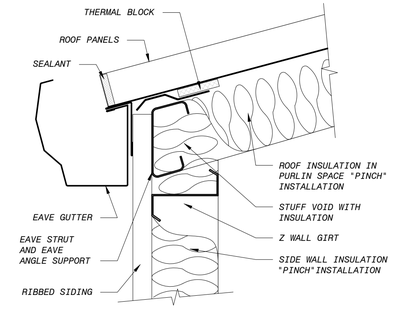

13 EAVE, GUTTER (NO INSULATION)

SCALE: 1 1/2" = 1'-0"

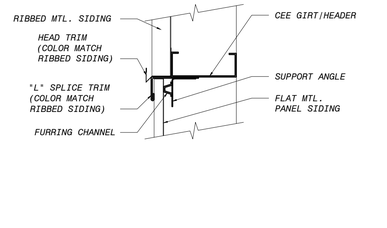

53 SIDING TRANSITION

SCALE: 1 1/2" = 1'-0"

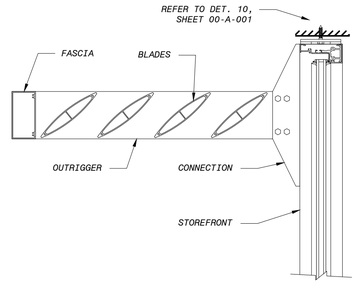

43 SUN CONTROL LOUVERS

SCALE: 1 1/2" = 1'-0"

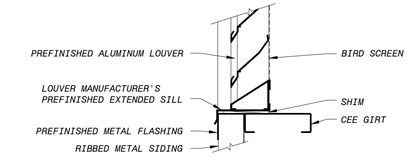

33 LOUVER SILL @ WALL

SCALE: 1 1/2" = 1'-0"

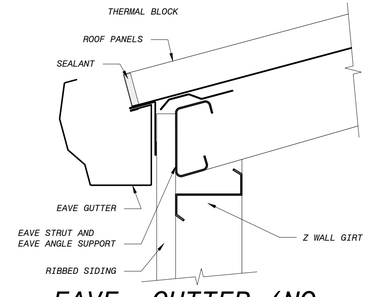

23 EAVE, GUTTER (NO INSULATION)

SCALE: 1 1/2" = 1'-0"

D400330
PLOTTED: 2/28/2020 3:14 PM

NO.	BY	CHK	APP	DATE	REVISIONS AND RECORD OF USE

LICENSED ARCHITECT
BRUCE DOUGLAS FRASER
C 9787
EXPIRES 12-31-20
STATE OF CALIFORNIA

FRASER SEIPLE ARCHITECTS
JOINT VENTURE
BLACK & VEATCH
FILANC

CITY OF MORRO BAY
MORRO BAY WATER
WATER RECLAMATION FACILITY (WRF)

ARCHITECTURAL
DETAILS
ENTRY, LOUVER, AND ROOF EDGE DETAILS

DESIGNED: BDF
DETAILED: SS
CHECKED:
APPROVED:
DATE:

0 1/2 1
IF THIS BAR DOES NOT MEASURE 1" THEN DRAWING IS NOT TO FULL SCALE

PROJECT NO.
400530

00-A-002
SHEET
OF

System No. W-L-8071

WL 8071

F Ratings - 1 and 2 Hr (See Item 1)
T Rating - 0 and 1/2 Hr (See Item 2D)

1.) Nom 2 in. (51 mm) diam (or smaller) steel flexible metal gas piping. Plastic covering on piping may or may not be removed on both sides of floor or wall assembly.
OMEGA FLEX INC
2.) Nom 1 in. (25 mm) diam (or smaller) steel flexible metal gas piping. Plastic covering on piping may or may not be removed on both sides of floor or wall assembly.
GASTITE, DIV OF TITEFLEX.
3.) Nom 2 in. (51 mm) diam (or smaller) steel flexible metal gas piping. Plastic covering on piping may or may not be removed on both sides of floor or wall assembly.
WARD MFG INC

The T Rating of the firestop system is 1/2 hr except that when Item 2D is used, the T Rating is 0 hr.

3. Electrical Nonmetallic Tubing (ENT)* — Nom 2 in. (51 mm) diam (or smaller) ENT formed of PVC, installed in accordance with Article 331 of the National Electrical Code (NFPA No. 70). Max one ENT installed concentrically or eccentrically within the opening. Annular space between ENT and periphery of opening to be min 1/4 in. (6 mm) to max 2 in. (51 mm). Annular space between ENT and metallic penetrants or cables to be min 1/2 in. (13 mm) to max 1-1/2 in. (38 mm). ENT to be rigidly supported on both sides of the wall assembly.

See Electrical Nonmetallic Tubing (FKHU) in UL Electrical Construction Materials Directory for names of manufacturers.

4. Cables — Nom 4 in. (102 mm) diam (or smaller) tight bundle of cables. Cable bundle spaced 0 in. (point contact) to 2 in. (51 mm) from periphery of opening. Cable bundle to be rigidly supported on both sides of wall assembly. Any combination of the following types and sizes of cables may be used:

A. Max 200 pair No. 24 AWG (or smaller) copper conductor with polyvinyl chloride (PVC) insulation and jacket materials.
B. Max 1/C No. 500 kcmil (or smaller) copper conductor cable with cross-linked polyethylene (XLPE) jacket.
C. Max 3/C with ground No. 2/0 AWG (or smaller) aluminum conductor SER cables with PVC insulation and jacket.
D. Max 3/C No. 8 AWG (or smaller) copper conductor metal clad cable.
E. Max 4 pair No. 24 AWG (or smaller) copper conductor communication cable.
F. Max RG/U coaxial cable with fluorinated ethylene insulation and jacket.

5. Firestop System — The firestop system shall consist of the following:

A. Fill, Void or Cavity Material* - Sealant — Min 5/8 in. (16 mm) thickness of fill material applied within annulus flush with both surfaces of wall. At point contact locations, apply a min 1/2 in. (13 mm) diam bead of fill material at the penetrant/gypsum board interface.
HILTI CONSTRUCTION CHEMICALS, DIV OF
HILTI INC — FS-One Sealant

*Bearing the UL Classification Mark
+Bearing the UL Listing Mark

Hilti Firestop Systems

Reproduced by HILTI, Inc. Courtesy of Underwriters Laboratories, Inc.
July 26, 2006

Page: 2 of 2

System No. W-L-7040

WL 7040

Classified by Underwriters Laboratories, Inc. to UL 1479 and CAN/ULC-S115

ANSI/UL1479 (ASTM E814)	CAN/ULC S115
F Ratings - 1 and 2 Hr (See Items 1 and 3)	F Ratings - 1 and 2 Hr (See Items 1 and 3)
T Rating - 0 Hr	FT Rating - 0 Hr
L Rating at Ambient - Less Than 1 CFM/sq ft	FH Ratings - 1 and 2 Hr (See Items 1 and 3)
L Rating at 400°F - Less Than 1 CFM/sq ft	FTH Rating - 0 Hr
	L Rating at Ambient - Less Than 1 CFM/sq ft
	L Rating at 400°F - Less Than 1 CFM/sq ft

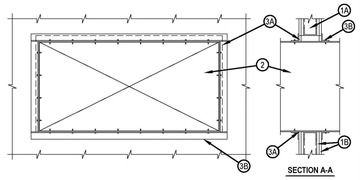

1. Wall Assembly — The fire-rated gypsum wallboard/stud wall assembly shall be constructed of the materials and in the manner specified in the individual U300, U400, V400 or V400 Series Wall and Partition Designs in the Fire Resistance Directory and shall include the following construction features:

A. Studs — Wall framing may consist of either wood studs or steel channel studs. Wood studs to consist of nom 2 by 4 in. (51 by 102 mm) lumber spaced 16 in. (406 mm) OC. Steel studs to be min 2-1/2 in. (64 mm) wide and spaced max 24 in. (610 mm) OC. Additional framing members shall be used to completely frame around opening.
B. Gypsum Board* — Nom 5/8 in. (16 mm) thick with square or tapered edges. The gypsum wallboard type, number of layers and sheet orientation shall be as specified in the individual Wall and Partition Design Number. Max area of opening is 1300 in.^{2} (0.84 m^2) with the dimension of 50 in. (1.27 m).
The hourly F and FH Ratings of the firestop system are equal to the hourly fire rating of the wall assembly in which it is installed.

2. Steel Duct — Nom 24 in. by 48 in. (610 by 1219 mm) (or smaller) No. 24 gauge (or heavier) galv steel duct to be installed within the firestop system. The annular space shall be min 0 (point contact) in. to a max 2 in. (51 mm) Duct to be rigidly supported on both sides of the wall assembly.

Hilti Firestop Systems

Reproduced by HILTI, Inc. Courtesy of Underwriters Laboratories, Inc.
September 16, 2015

Page: 1 of 2

System No. W-L-5028

WL 5028

F Ratings - 1 and 2 Hr (See Item 1)
T Ratings - 3/4 Hr
L Rating at Ambient - Less Than 1 CFM/sq ft
L Rating at 400 F - Less Than 1 CFM/sq ft

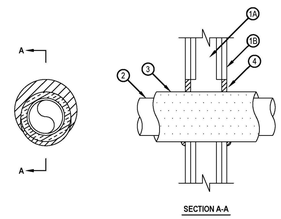

1. Wall Assembly — The 1 or 2 hr fire-rated gypsum wallboard/stud wall assembly shall be constructed of the materials and in the manner specified in the individual U300 or U400 Series Wall and Partition Designs in the UL Fire Resistance Directory and shall include the following construction features:

A. Studs — Wall framing may consist of either wood studs or steel channel studs. Wood studs to consist of nom 2 by 4 in. lumber spaced 16 in. OC. Steel studs to be min 2-1/2 in. wide and spaced max 24 in. OC.
B. Gypsum Board* — 5/8 in. thick, 4 ft wide with square or tapered edges. The gypsum wallboard type, thickness, number of layers, fastener type and sheet orientation shall be as specified in the individual Wall and Partition Design. Max diam of opening is 7-1/2 in.
The hourly F Rating of the firestop system is equal to the hourly fire rating of the wall assembly in which it is installed.

2. Through Penetrants — One metallic pipe or tubing to be centered within the firestop system. Pipe or tubing to be rigidly supported on both sides of wall assembly. The following types and sizes of metallic pipes or tubing may be used:

A. Steel Pipe — Nom 4 in. diam (or smaller) Schedule 40 (or heavier) steel pipe.
B. Copper Tubing — Nom 2 in. diam (or smaller) Type L (or heavier) copper tubing.
C. Copper Pipe — Nom 2 in. diam (or smaller) Regular (or heavier) copper pipe.

Hilti Firestop Systems

Reproduced by HILTI, Inc. Courtesy of Underwriters Laboratories, Inc.
February 08, 2006

Page: 1 of 2

UL/cUL SYSTEM NO. WL3071

CABLES THROUGH 1-HR. OR 2-HR. GYPSUM WALL ASSEMBLY
F RATING = 1-HR. OR 2-HR.
T RATING = 1/4 HR. OR 3/4 HR.
L RATING AT AMBIENT = LESS THAN 1 CFM/SQ. FT.
L RATING AT 400° F = 4 CFM/SQ. FT.

WL3071e 051999

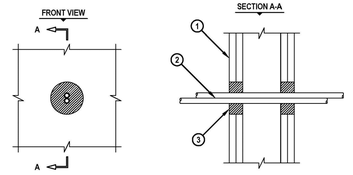

1. GYPSUM WALL ASSEMBLY (UL/cUL CLASSIFIED U300 OR U400 SERIES) (1-HR. OR 2-HR. FIRE-RATING) (2-HR. SHOWN).
2. MAXIMUM 3/C (+ GRND) NO. 2/0 AWG ALUMINUM OR COPPER SER CABLE WITH PVC INSULATION (MAX. QTY. = 2).
3. HILTI FS-ONE INTUMESCENT FIRESTOP SEALANT:
   A. MINIMUM 5/8" DEPTH, FOR A 1-HR. FIRE-RATING.
   B. MINIMUM 1-1/4" DEPTH, FOR A 2-HR. FIRE-RATING.

NOTES : 1. MAXIMUM DIAMETER OF OPENING = 3".
2. ANNULAR SPACE = MINIMUM 1/2", MAXIMUM 1-1/2".

HILTI FIRESTOP SYSTEMS	HILTI, Inc. Tulsa, Oklahoma USA (918) 252-6000	Sheet: 1 of 1	Drawing No. WL 3071e
		Scale: 3/16" = 1"	
		Date: SEPT. 16, 1999	

Saving Lives through Innovation and Education

10 NON RATED WALL/CEILING

SCALE: 1 1/2" = 1'-0"

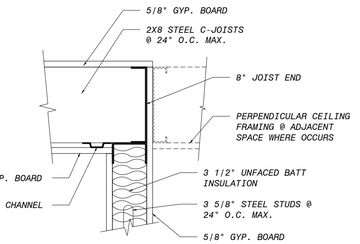

20 FIREPROOFING (WL3071e)

SCALE: N.T.S.

System No. W-L-8071

WL 8071

F Ratings - 1 and 2 Hr (See Item 1)
T Rating - 0 and 1/2 Hr (See Item 2D)



1. Wall Assembly — The 1 or 2 hr fire-rated gypsum board/stud wall assembly shall be constructed of the materials and in the manner specified in the individual U300, U400 or V400 Series Wall or Partition Design in the UL Fire Resistance Directory and shall include the following construction features:

A. Studs — Wall framing may consist of either wood studs or steel channel studs. Wood studs to consist of nom 2 by 4 in. (51 by 102 mm) lumber spaced 16 in. (406 mm) OC. Steel studs to be min 3-1/2 in. (89 mm) wide and spaced max 24 in. (610 mm) OC.
B. Gypsum Board* — Thickness, type, number of layers and fasteners as specified in the individual Wall and Partition Design. Max diam of opening is 8 in. (203 mm).

2. Metallic Penetrants — One or more metallic pipes, conduits or tubing installed concentrically or eccentrically within the opening. Annular space between metallic penetrants and periphery of opening to be min 0 in. (point contact) to max 2 in. (51 mm). Annular space between metallic penetrants, nonmetallic penetrant and cables to be min 1/2 in. (13 mm) to max 1-1/2 in. (38 mm). Metallic pipes, conduit or tubing to be rigidly supported on both sides of wall assembly. The following types and sizes of metallic pipes, conduits or tubing may be installed within the opening:

A. Steel Pipe — Nom 2 in. (51 mm) diam (or smaller) Schedule 10 (or heavier) steel pipe.
B. Iron Pipe — Nom 2 in. (51 mm) diam (or smaller) cast or ductile iron pipe.
C. Conduit — Nom 2 in. (51 mm) diam (or smaller) rigid steel conduit or electrical metallic tubing (EMT).
D. Through Penetrating Product* — Flexible Metal Piping — The following types of steel flexible metal gas piping may be used:

Hilti Firestop Systems

Reproduced by HILTI, Inc. Courtesy of Underwriters Laboratories, Inc.
July 26, 2006

Page: 1 of 2

System No. W-L-7040

WL 7040

3. Firestop System — The firestop system shall consist of the following:
A. Fill, Void or Cavity Material* — Sealant — Min 5/8 in. (16 mm) thickness of fill material applied within annulus flush with both surfaces of wall. At point contact location, a min 1/2 in. (13 mm) diam bead of fill material shall be applied to the wall/duct interface on both surfaces of wall.
HILTI CONSTRUCTION CHEMICALS, DIV OF HILTI INC — FS-ONE Sealant, FS-ONE MAX Intumescent Sealant, CP601S Elastomeric Firestop Sealant or CP606 Flexible Sealant
B. Steel Retaining Angle — No. 18 MSG (0.048 in.) galv steel angles cut to fit contour of duct with a 2 in. overlap on the duct and a min 1 in. overlap on the gypsum board assembly on both sufaces of wall. 2 in. leg of angle secured to duct with min No. 8 by 3/4 in. long sheet metal screws, spaced a max of 6 in. OC. When bead of fill material is used at joint contact locations, angles shall be installed prior to full material curing.

* Indicates such products shall bear the UL or cUL Certification Mark for jurisdictions employing the UL or cUL Certification (such as Canada), respectively.

Hilti Firestop Systems

Reproduced by HILTI, Inc. Courtesy of Underwriters Laboratories, Inc.
September 16, 2015

Page: 2 of 2

System No. W-L-5028

WL 5028

F Ratings - 1 and 2 Hr (See Item 1)
T Ratings - 3/4 Hr
L Rating at Ambient - Less Than 1 CFM/sq ft
L Rating at 400 F - Less Than 1 CFM/sq ft

3. Tube Insulation — Plastics+ — Nom 3/4 in. thick acrylonitrile butadiene/polyvinyl chloride (AB/PVC) flexible foam furnished in the form of tubing. An annular space of min 0 in. (point contact) to max 1-1/2 in. is required within the firestop system.

See Plastics+ (QMFZ2) category in the Recognized Component Directory for names of manufacturers. Any Recognized Component tube insulation material meeting the above specifications and having a UL 94 Flammability Classificaton of 94-5VA may be used.
The hour T Rating of the firestop system is dependent on the hourly fire rating of the wall assembly in which it is installed, the size and type of through penetrant and the pipe covering thickness, as shown in the table below:

Wall Assembly Hr Rating	Type +	Through Penetrant Max Diam In.
1	A	4
1	A, B, or C	2
2	A	4
2	A, B, or C	2

+ Indicates penetrant type as itemized in Item 2.

4. Fill, Void or Cavity Material* — Sealant — Min 5/8 in. thickness of fill material applied within the annulus, flush with both surfaces of wall. At the point contact location between pipe covering and gypsum wallboard, a min 1/2 in. diam bead of fill material shall be applied at the pipe covering/gypsum wallboard interface on both surfaces of wall.

HILTI CONSTRUCTION CHEMICALS, DIV OF
HILTI INC — FS-ONE Sealant

*Bearing the UL Classification Mark

Hilti Firestop Systems

Page: 2 of 2

UL/cUL SYSTEM NO. W-L-1054

METAL PIPE THROUGH 1-HR. OR 2-HR. GYPSUM WALL ASSEMBLY
F-RATING = 1-HR. OR 2-HR.
T-RATING = 0-HR.
L-RATING AT AMBIENT = LESS THAN 1 CFM/SQ. FT.
L-RATING AT 400°F = 4 CFM/SQ. FT.

WL1054j 110602

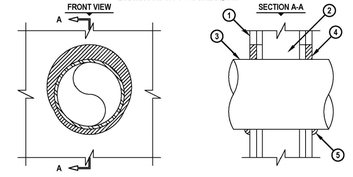

1. GYPSUM WALL ASSEMBLY (UL/cUL CLASSIFIED U300 OR U400 SERIES) (1-HR. OR 2-HR. FIRE-RATING) (2-HR. SHOWN).
2. (NOT SHOWN). WOOD STUDS TO CONSIST OF NOMINAL 2" x 4" LUMBER. STEEL STUDS TO BE MINIMUM 2-1/2" WIDE.
3. PENETRATING ITEM TO BE ONE OF THE FOLLOWING :
   A. MAXIMUM 30" DIAMETER STEEL PIPE (SCHEDULE 10 OR HEAVIER).
   B. MAXIMUM 30" DIAMETER CAST IRON PIPE.
   C. MAXIMUM 6" NOMINAL DIAMETER COPPER PIPE.
   D. MAXIMUM 6" NOMINAL DIAMETER STEEL CONDUIT.
   E. MAXIMUM 4" NOMINAL DIAMETER EMT.
4. MINIMUM 5/8" DEPTH HILTI FS-ONE INTUMESCENT FIRESTOP SEALANT.
5. MINIMUM 1/2" BEAD HILTI FS-ONE INTUMESCENT FIRESTOP SEALANT AT POINT OF CONTACT.

NOTES : 1. MAXIMUM DIAMETER OF OPENING :
A. 32-1/4" FOR STEEL STUD WALLS.
B. 14-1/2" FOR WOOD STUD WALLS.
2. ANNULAR SPACE = MINIMUM 0", MAXIMUM 2-1/4".
3. PIPE MAY BE INSTALLED WITH CONTINUOUS POINT OF CONTACT.
4. PIPE MAY BE INSTALLED AT AN ANGLE NOT GREATER THAN 45° FROM PERPENDICULAR.

HILTI FIRESTOP SYSTEMS	HILTI, Inc. Tulsa, Oklahoma USA (918) 252-6000	Sheet: 1 of 1	Drawing No. WL 1054q
		Scale: 7/32" = 1"	
		Date: Nov. 6, 2002	

Saving Lives through Innovation and Education

11 1 HOUR WALL/CEILING

SCALE: 1 1/2" = 1'-0"

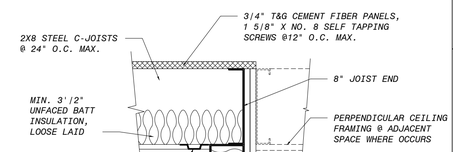

UL DESIGN U419/H505

12 2-HOUR WALL/CEILING

SCALE: 1 1/2" = 1'-0"

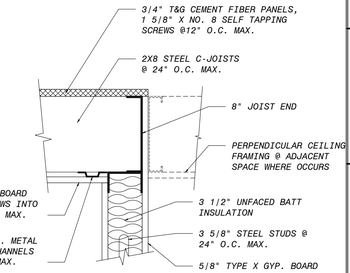

UL DESIGN U419/H505

50 FIREPROOFING (W-L-8071)

SCALE: N.T.S.

40 FIREPROOFING (W-L-7040)

SCALE: N.T.S.

30 FIREPROOFING (W-L-5028)

SCALE: N.T.S.

21 FIREPROOFING (W-L-1054)

SCALE: N.T.S.

NO. BY CHK APP'D
REVISIONS AND RECORD OF USE
DATE

LICENSED ARCHITECT
BRUCE DOUGLAS FRASER
C 9787
EXPIRES 12-31-10
STATE OF CALIFORNIA

FRASER SEIPLE ARCHITECTS
JOINT VENTURE
BLACK & VEATCH
FILANC

CITY OF MORRO BAY
MORRO BAY WATER
WATER RECLAMATION FACILITY (WRF)

ARCHITECTURAL
DETAILS
FIREPROOFING DETAILS

DESIGNED: BDF
DETAILED: SS
CHECKED:
APPROVED:
DATE:

0 1/2 1
IF THIS BAR DOES NOT MEASURE 1" THEN DRAWING IS NOT TO FULL SCALE

PROJECT NO.
400530

00-A-003
SHEET
OF

D400530
PLOTTED: 2/4/2020 11:41 AM

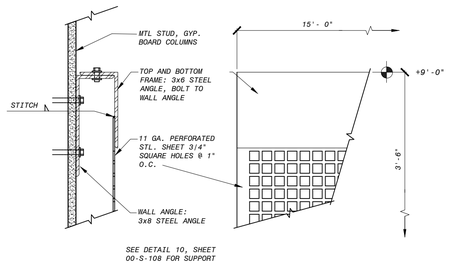

40 CONTROL ROOM MONITOR MOUNTING SCREEN

SCALE: 2" = 1'-0"

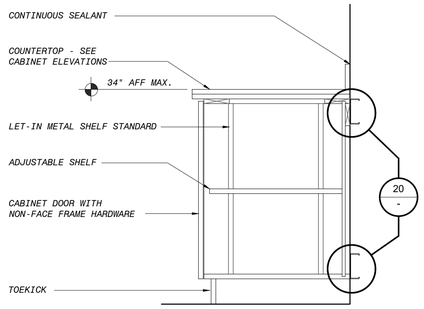

30 BASE CABINET

SCALE: 1" = 1'-0"

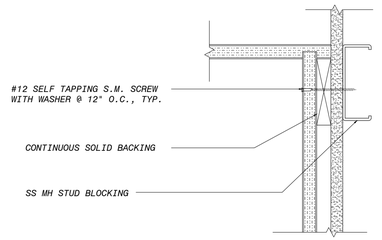

ANCHORAGE AT TOP

CABINET KEYNOTES

A. POST FORMED EASED COUNTER EDGE, SEE CABINET ELEVATIONS.
B. TOEKICK PER WIC STANDARDS, 6" HIGH U.N.O.
C. FLOOR ATTACHMENT PER WIC STANDARDS.
D. BACKSPLASH PER WIC STANDARDS, SEE CABINET ELEVATIONS.
E. WALL MOUNTING RAILS AND BLOCKING PER WIC STANDARDS.
F. NOT USED.
G. CABINET EDGE PER WIC STANDARDS, APPLY DOOR BUMPERS.
H. ADJUSTABLE SHELF ON LET-IN METAL SHELF BRACKETS.
I. DRAWER PER WIC STANDARDS WHERE APPLICABLE, SEE CABINET ELEVATIONS.

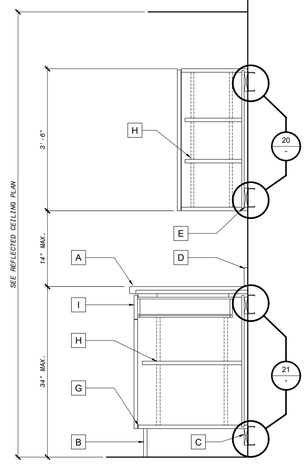

10 CABINET SECTION

SCALE: 1 1/2" = 1'-0"

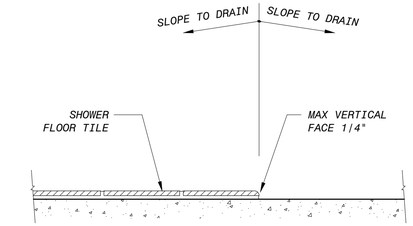

41 SHOWER THRESHOLD

SCALE: HALF SIZE

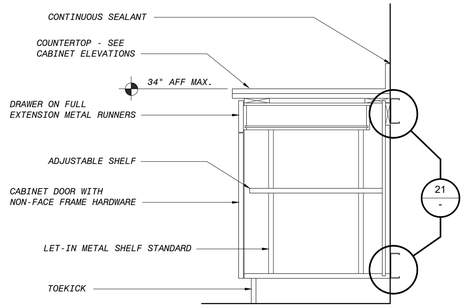

31 BASE CAB. WITH DRAWER

SCALE: 1" = 1'-0"

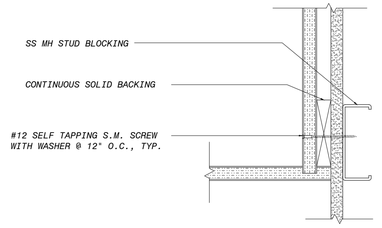

20 WALL CAB. ANCHORAGE

SCALE: 1 1/2" = 1'-0"

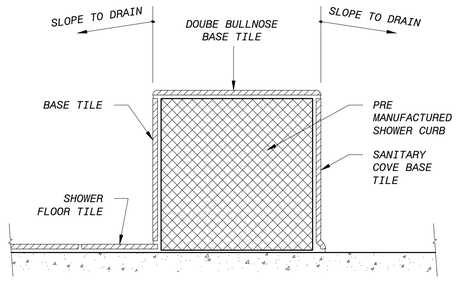

42 SHOWER CURB

SCALE: HALF SIZE

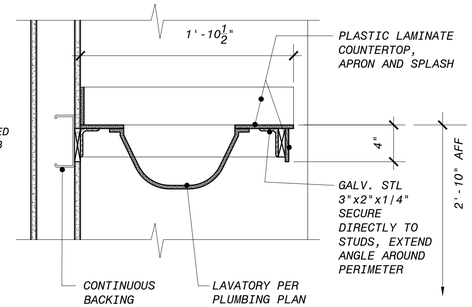

32 LAVATORY COUNTER

SCALE: 1 1/2" = 1'-0"

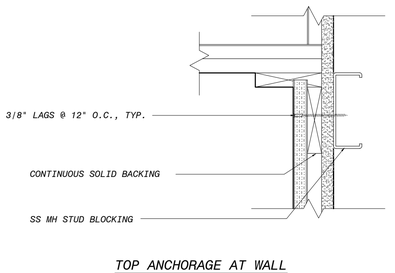

TOP ANCHORAGE AT WALL

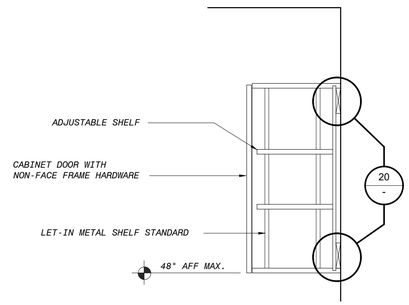

11 WALL CABINET

SCALE: 1 1/2" = 1'-0"

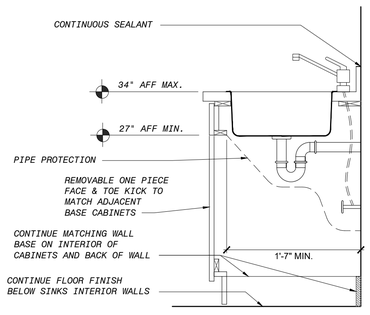

33 OPEN SINK CABINET

SCALE: 1" = 1'-0"

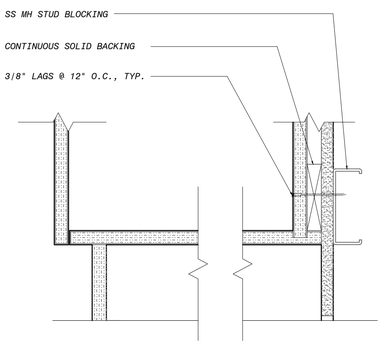

21 BASE CAB. ANCHORAGE

SCALE: 1 1/2" = 1'-0"

NO.	BY	CHK	APP	DATE	REVISIONS AND RECORD OF USE

LICENSED ARCHITECT
BRUCE DOUGLAS FRASER
C 9787
EXPIRES 12-31-20
STATE OF CALIFORNIA

JOINT VENTURE
FRASER SEIPLE ARCHITECTS
BLACK & VEATCH
FILANC

CITY OF MORRO BAY
MORRO BAY WATER
WATER RECLAMATION FACILITY (WRF)

ARCHITECTURAL
DETAILS
CASEWORK DETAILS

DESIGNED: BDF
DETAILED: SS
CHECKED:
APPROVED:
DATE:

0 1/2 1
IF THIS BAR DOES NOT MEASURE 1" THEN DRAWING IS NOT TO FULL SCALE

PROJECT NO.
400530

00-A-004
SHEET
OF

PLOTTED: 3/17/2020 5:13 PM

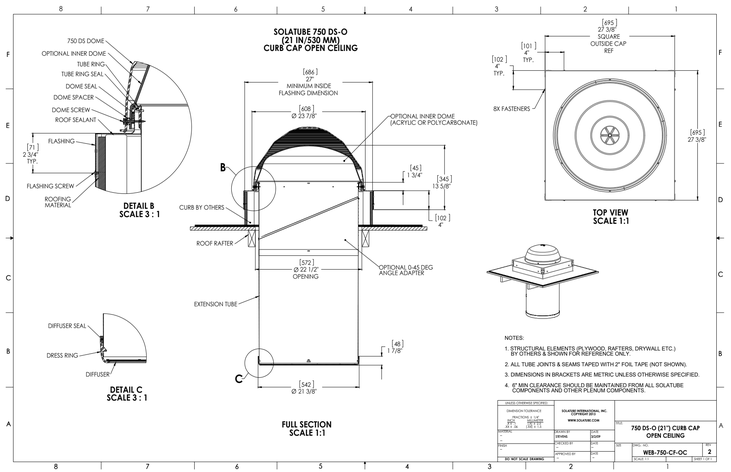

31 SOLAR TUBE (OPEN CEILING)

SCALE: N.T.S.

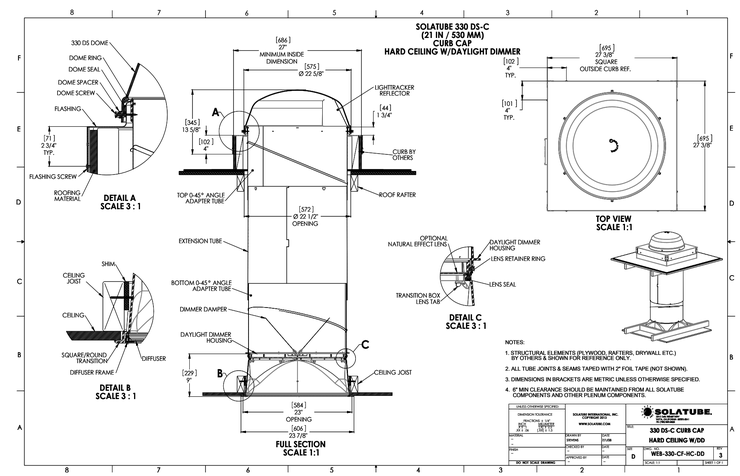

32 SOLAR TUBE (HARD CEILING)

SCALE: N.T.S.

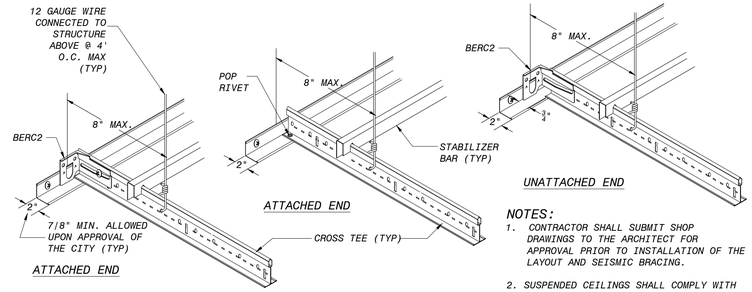

20 SEISMIC END RESTRAINTS: SEISMIC ZONE D

SCALE: N.T.S.

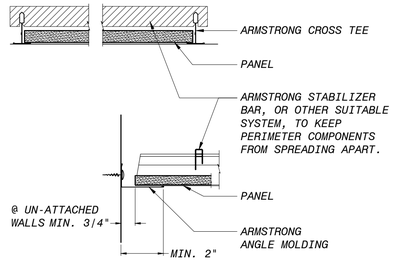

21 STABILIZER BAR: SEISMIC ZONE D

SCALE: 3" = 1'-0"

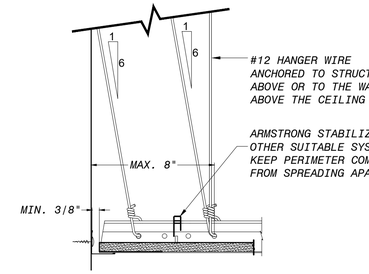

10 SEISMIC END RESTRAINT: FIXED END - SEISMIC ZONE D

SCALE: X" = 1'-0"

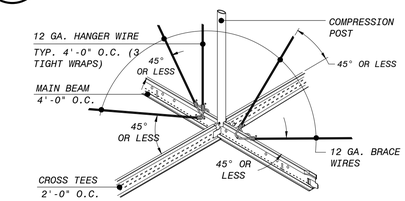

BRACING NOTES:
1. VERTICAL POSTS MAY NOT BE REQUIRED IN SOME CITIES AND NOT ENFORCED IN ALL SEISMIC ZONES.
2. BRACING WIRES TO BE ATTACHED A MAXIMUM OF 45° TO THE PLANE OF THE CEILING AND PARALLEL TO THE COMPONENTS AT THE BRACING POINT. BRACE WIRES TO BE TAUT AND TIED BOTH ENDS WITH THREE TIGHT WRAPS.

22 LATERAL BRACING: WITH COMPRESSION POST

SCALE: N.T.S.

11 SEISMIC JOINT CLIP

SCALE: N.T.S.

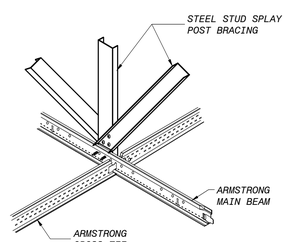

23 LATERAL BRACING: STEEL STUD SPLAY POST BRACING

SCALE: N.T.S.

GENERAL NOTES

SUSPENDED CEILINGS IN IBC CATEGORIES D, E AND F MUST MEET THESE REQUIREMENTS:

MINIMUM 2" WALL MOLDING
GRID MUST BE ATTACHED TO TWO ADJACENT WALLS –OPPOSITE WALLS MUST HAVE A 3|4" CLEARANCE
ENDS OF MAIN BEAMS AND CROSS TEES MUST BE TIED TOGETHER TO PREVENT THEIR SPREADING
HEAVY-DUTY GRID SYSTEM
CEILING AREAS OVER 1,000 SF MUST HAVE HORIZONTAL RESTRAINT WIRE OR RIGID BRACING
CEILING AREAS OVER 2,500 SF MUST HAVE SEISMIC SEPARATION JOINTS OR FULL HEIGHT PARTITIONS
CEILINGS WITHOUT RIGID BRACING MUST HAVE 2" OVERSIZED TRIM RINGS FOR SPRINKLERS AND OTHER PENETRATIONS
CHANGES IN CEILING PLANE MUST HAVE POSITIVE BRACING
CABLE TRAYS AND ELECTRICAL CONDUITS MUST BE INDEPENDENTLY SUPPORTED AND BRACED
SUSPENDED CEILINGS WILL BE SUBJECT TO SPECIAL INSPECTION
PERIMETER SUPPORT WIRES WITHIN 8"

NO.	BY	CHK	APP	DATE	REVISIONS AND RECORD OF USE

LICENSED ARCHITECT
BRUCE DOUGLAS FRASER
C 9787
EXPIRES 12-31-21
STATE OF CALIFORNIA

FRASER SEIPLE ARCHITECTS
JOINT VENTURE
BLACK & VEATCH
FILANC

CITY OF MORRO BAY
MORRO BAY WATER
WATER RECLAMATION FACILITY (WRF)

ARCHITECTURAL
DETAILS
SUSPENDED CEILING DETAILS

DESIGNED:	BDF
DETAILED:	SS
CHECKED:	
APPROVED:	
DATE:	

0 1/2 1
IF THIS BAR DOES NOT MEASURE 1" THEN DRAWING IS NOT TO FULL SCALE

PROJECT NO.
400530

00-A-005
SHEET
OF

D400530
PLOTTED: 2/4/2020 11:44 AM

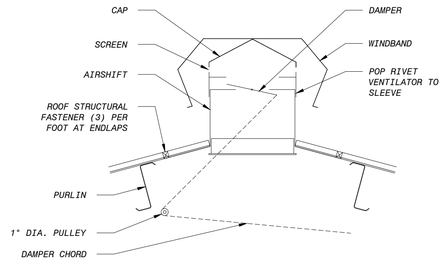

20 RIDGE VENT

SCALE: N.T.S.

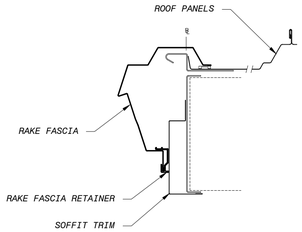

10 CANOPY RAKE TRIM

SCALE: N.T.S.

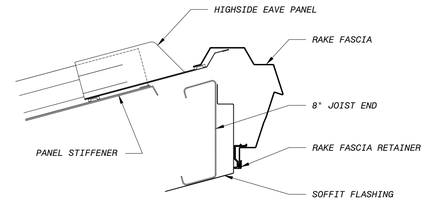

11 CANOPY HIGH EAVE FASCIA

SCALE: N.T.S.

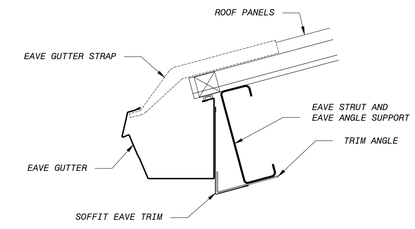

12 EAVE, GUTTER

SCALE: 1 1/2" = 1'-0"

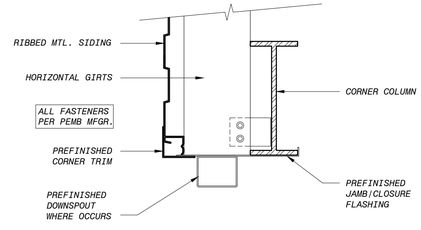

13 CORNER TRIM

SCALE: 1 1/2" = 1'-0"

NO.	BY	CHK	APP	DATE	REVISIONS AND RECORD OF USE

LICENSED ARCHITECT
BRUCE DOUGLAS FRASER
C 9787
EXPIRES 12-31-20
STATE OF CALIFORNIA

FRASER SEIPLE ARCHITECTS

JOINT VENTURE

BLACK & VEATCH

FILANC

CITY OF MORRO BAY
MORRO BAY WATER
WATER RECLAMATION FACILITY (WRF)

ARCHITECTURAL
DETAILS
ENTRY, LOUVER, AND ROOF EDGE DETAILS

DESIGNED: BDF
DETAILED: SS
CHECKED:
APPROVED:
DATE:

0 1/2 1
IF THIS BAR DOES NOT MEASURE 1" THEN DRAWING IS NOT TO FULL SCALE

PROJECT NO.
400530

00-A-006
SHEET
OF

D400530
PLOTTED: 3|6|2020 3:00 PM

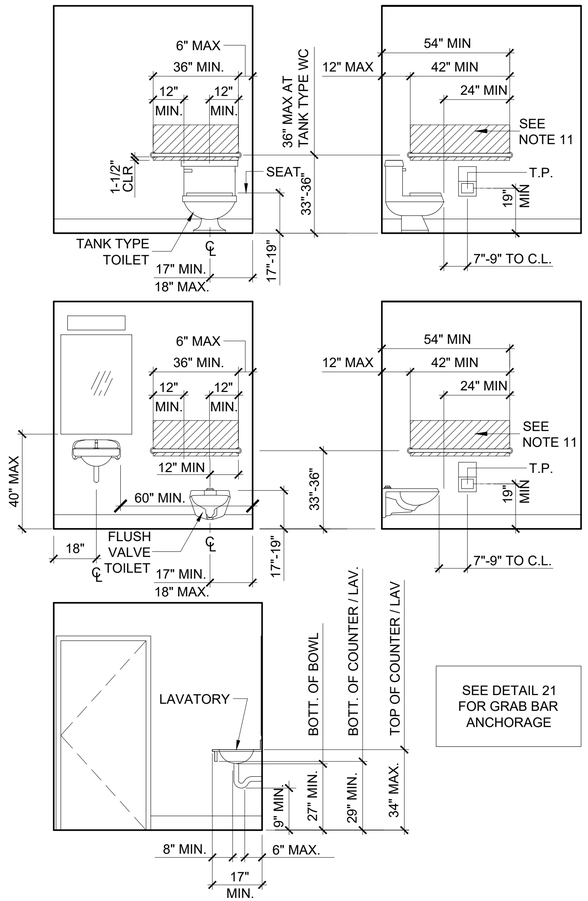

ACCESSIBILITY NOTES

1. UNLESS NOTED OTHERWISE, TOILET ROOM FIXTURES AND ACCESSORY INSTALLATION SHALL COMPLY WITH THESE NOTES AND ACCOMPANYING ILLUSTRATIONS
2. PROVIDE MINIMUM 30"x 48" CLEAR FLOOR OR GROUND SPACE TO ALLOW FORWARD OR PARALLEL APPROACH TO ACCESSORIES.
3. ONE FULL UNOBSTRUCTED SIDE OF THE CLEAR OR GROUND SPACE SHALL ADJOIN OR OVERLAP AN ACCESSIBLE ROUTE OR ADJOIN ANOTHER WHEELCHAIR CLEAR FLOOR SPACE.
4. MOUNT MIRROR(S) WITH THE BOTTOM EDGE NO HIGHER THAN 40" FROM FLOOR.
5. OPERABLE PARTS (INCLUDING COIN SLOTS) OF ALL FIXTURES OR ACCESSORIES SHALL BE LOCATED A MAXIMUM OF 40" ABOVE FLOOR, INCLUDING BUT NOT LIMITED TO SOAP DISPENSERS, TOWELS, TOILET SEAT COVERS, AUTO DRYERS, SANITARY NAPKIN DISPENSERS, AND WASTE RECEPTACLES.
6. CONTROLS AND OPERATING MECHANISMS SHALL BE OPERABLE WITH ONE HAND AND SHALL NOT REQUIRE TIGHT GRASPING, PINCHING, OR TWISTING OF THE WRIST.
7. THE FORCE REQUIRED TO ACTIVATE CONTROLS SHALL BE 5 LB. MAXIMUM AND PROVIDE 10 SECONDS MINIMUM OF RUNNING WATER.
8. COAT HOOKS, SHELVING AND SIMILAR WALL MOUNTED ITEMS SHALL BE LOCATED WITHIN APPROPRIATE REACH RANGES AS REQUIRED BY CBC 11B-604.8.3 AS FOLLOWS:
   - COAT HOOKS SHALL BE LOCATED WITHIN ONE OF THE REACH RANGES SPECIFIED IN SECTION 11B-308. SHELVES SHALL BE LOCATED 40" MIN AND 48" MAX ABOVE FINISHED FLOOR.
9. IF MEDICINE CABINETS ARE PROVIDED, AT LEAST ONE SHALL HAVE A USABLE SHELF NO HIGHER THAN 44" ABOVE FLOOR
10. PROVIDE APPROVED PROTECTIVE INSULATION WRAP AT HOT WATER SUPPLIES AND DRAIN PIPES TO PREVENT CONTACT. THERE SHALL BE NO SHARP OR ABRASIVE SURFACES UNDER SINKS AND LAVATORIES.
11. ITEMS PROTRUDING FROM THE WALL ARE NOT PERMITTED IN THE CROSSHATCHED ZONE (WITHIN 12" ABOVE A GRAB BAR, WITHIN 1-1/2" BELOW A GRAB BAR
12. WATER CLOSET LOCATION SHALL COMPLY WITH CBC SECTION 11B-604.2. THE WATER CLOSET SHALL BE POSITIONED WITH A WALL OR PARTITION TO THE REAR AND TO ONE SIDE. THE CENTERLINE OF THE WATER CLOSET SHALL BE 17 INCHES MINIMUM TO 18 INCHES MAXIMUM FROM THE SIDE WALL OR PARTITION.

43 RESTROOM FIXTURES AND ACCESSORY POSITIONING
SCALE: 3/8" = 1'-0"

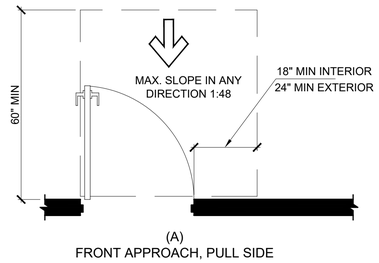

(A)
FRONT APPROACH, PULL SIDE

30 MANEUVERING CLEARANCE
SCALE: 1/2" = 1'-0"

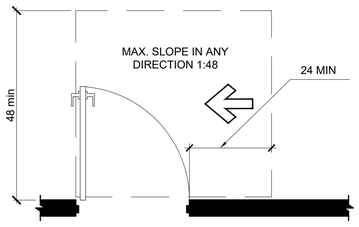

(H)
LATCH APPROACH, PULL SIDE

31 MANEUVERING CLEARANCE
SCALE: 1/2" = 1'-0"

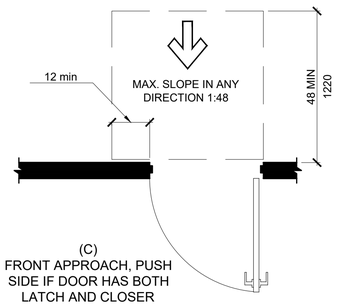

(C)
FRONT APPROACH, PUSH SIDE IF DOOR HAS BOTH LATCH AND CLOSER

32 MANEUVERING CLEARANCE
SCALE: 1/4" = 1'-0"

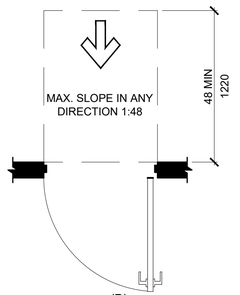

(B)
FRONT APPROACH, WITHOUT LATCH AND CLOSER

33 MANEUVERING CLEARANCE
SCALE: 1/4" = 1'-0"

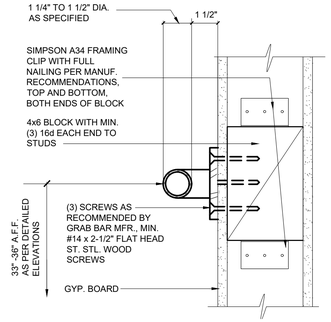

20 TYP. GRAB MOUNT
SCALE: 3" = 1'-0"

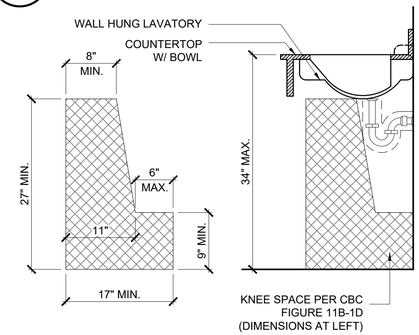

21 ACCESSIBLE KNEESPACE
SCALE: 1" = 1'-0"

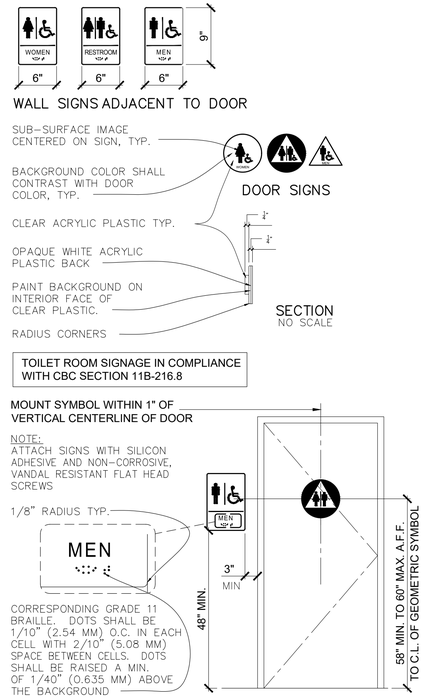

23 ACCESSIBLE SIGNAGE
SCALE: 1/4" = 1'-0"

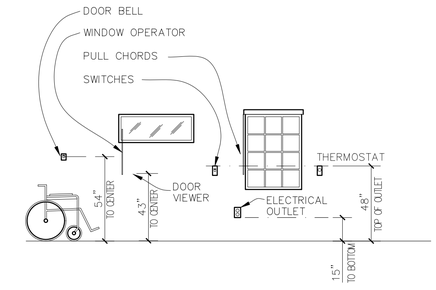

10 SWITCHES AND OUTLETS
SCALE: N.T.S.

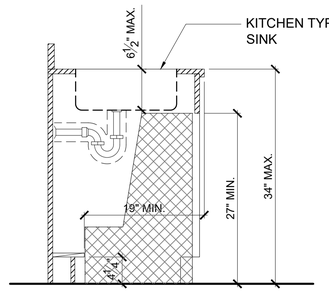

NOTE: PROVIDE ACCESSIBLE KNEE SPACE PER CBC FIGURE 11B-1D.

11 ACCESSIBLE SINK BASE
SCALE: 1" = 1'-0"

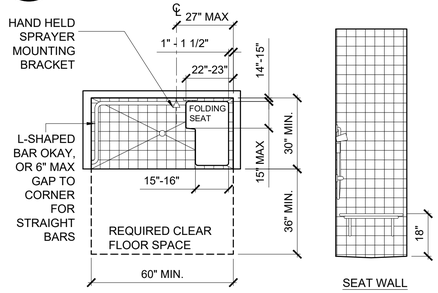

NOTE: REFER TO PLUMBING PLANS FOR SHOWER HEAD FIXTURES AND FITTINGS

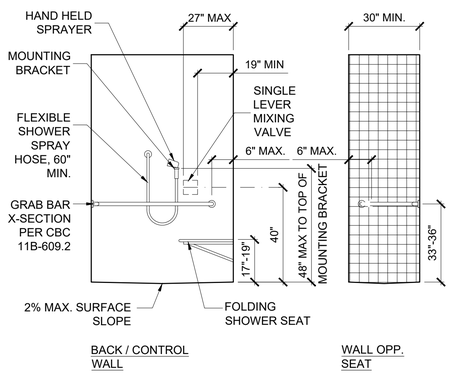

13 ACCESSIBLE SHOWER
SCALE: 3/8" = 1'-0"

NO.	BY	CHK	APP	DATE	REVISIONS AND RECORD OF USE

LICENSED ARCHITECT
BRUCE DOUGLAS FRASER
C 9787
EXPIRES 12-31-20
STATE OF CALIFORNIA

FRASER SEMPLE ARCHITECTS

JOINT VENTURE

BLACK & VEATCH

FILANC

CITY OF MORRO BAY
MORRO BAY WATER
WATER RECLAMATION FACILITY (WRF)

ARCHITECTURAL
DETAILS
DOOR AND WINDOW DETAILS

DESIGNED:	BDF
DETAILED:	SS
CHECKED:	
APPROVED:	
DATE:	

0 1/2 1
IF THIS BAR DOES NOT MEASURE 1" THEN DRAWING IS NOT TO FULL SCALE

PROJECT NO.
400530

00-A-007
SHEET
OF

PLOTTED: 3/17/2020 5:23 PM

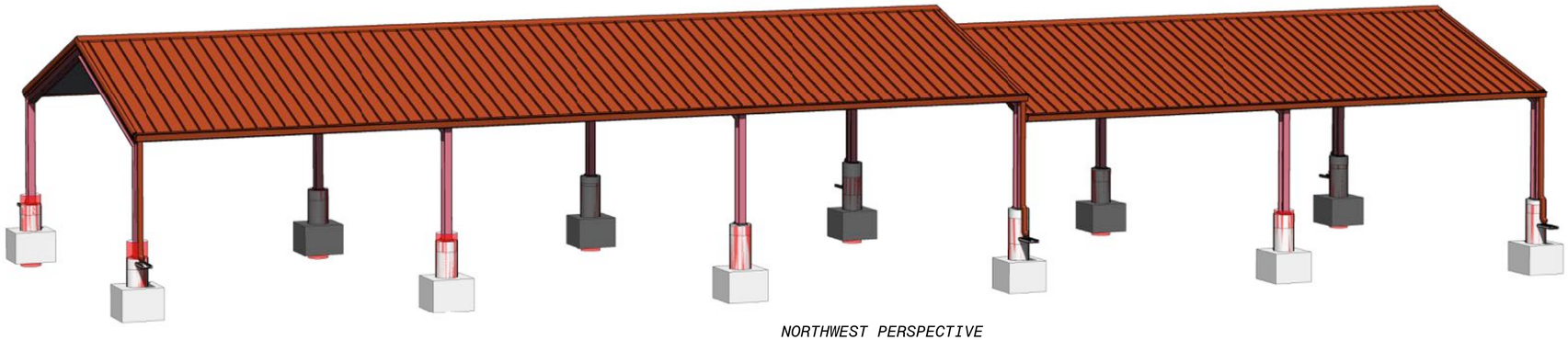

NORTHWEST PERSPECTIVE

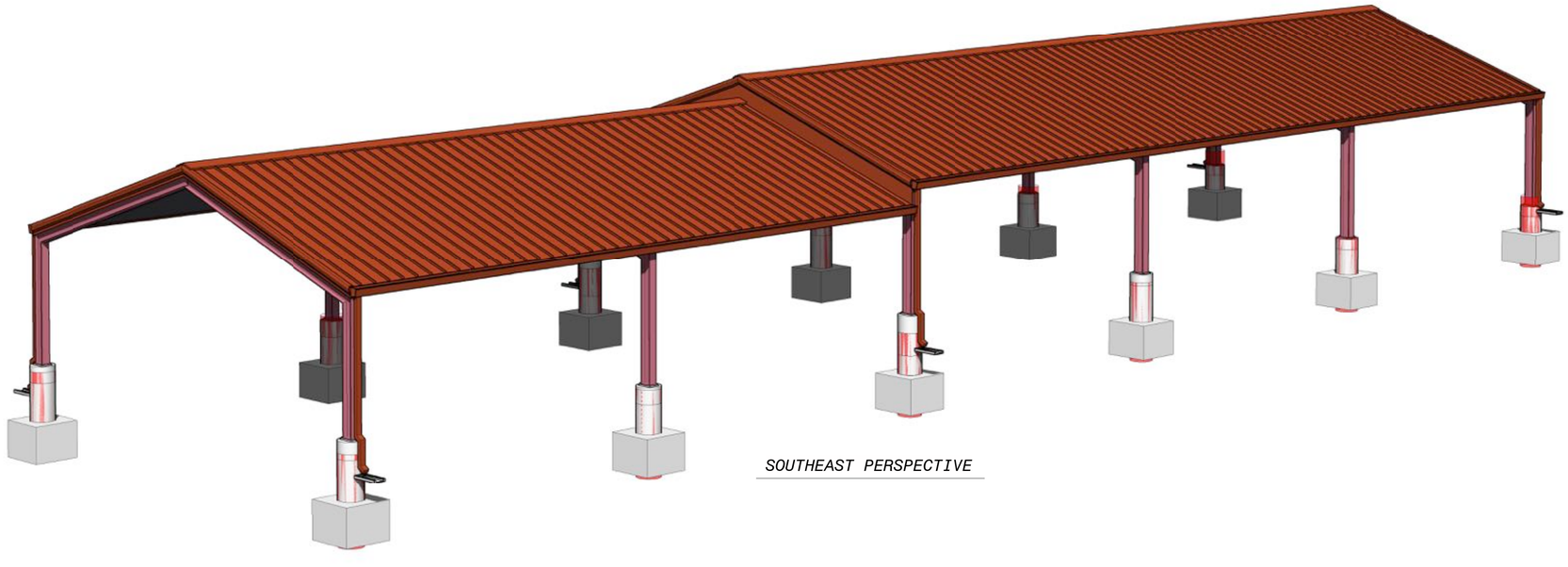

SOUTHEAST PERSPECTIVE

90% SUBMITTAL - NOT FOR CONSTRUCTION

NO.	BY	CHK	APP'D	DATE	REVISIONS AND RECORD OF USE

LICENSED ARCHITECT
BRUCE DOUGLAS FRASER
C 9787
STATE OF CALIFORNIA

FRASER SEIPLE ARCHITECTS

JOINT VENTURE

BLACK & VEATCH

FILANC

CITY OF MORRO BAY
MORRO BAY WATER
RECLAMATION FACILITY (WRF)

WRF PARKING CANOPY
ARCHITECTURAL
PERSPECTIVES

DESIGNED: BDF
DETAILED: ANH
CHECKED: -
APPROVED: -
DATE:

0 1/2 1
IF THIS BAR DOES NOT MEASURE 1" THEN DRAWING IS NOT TO FULL SCALE

PROJECT NO.
400530

14-A-001
SHEET
OF

PLOTTED: 1/21/2020 11:51:50 AM
D400530

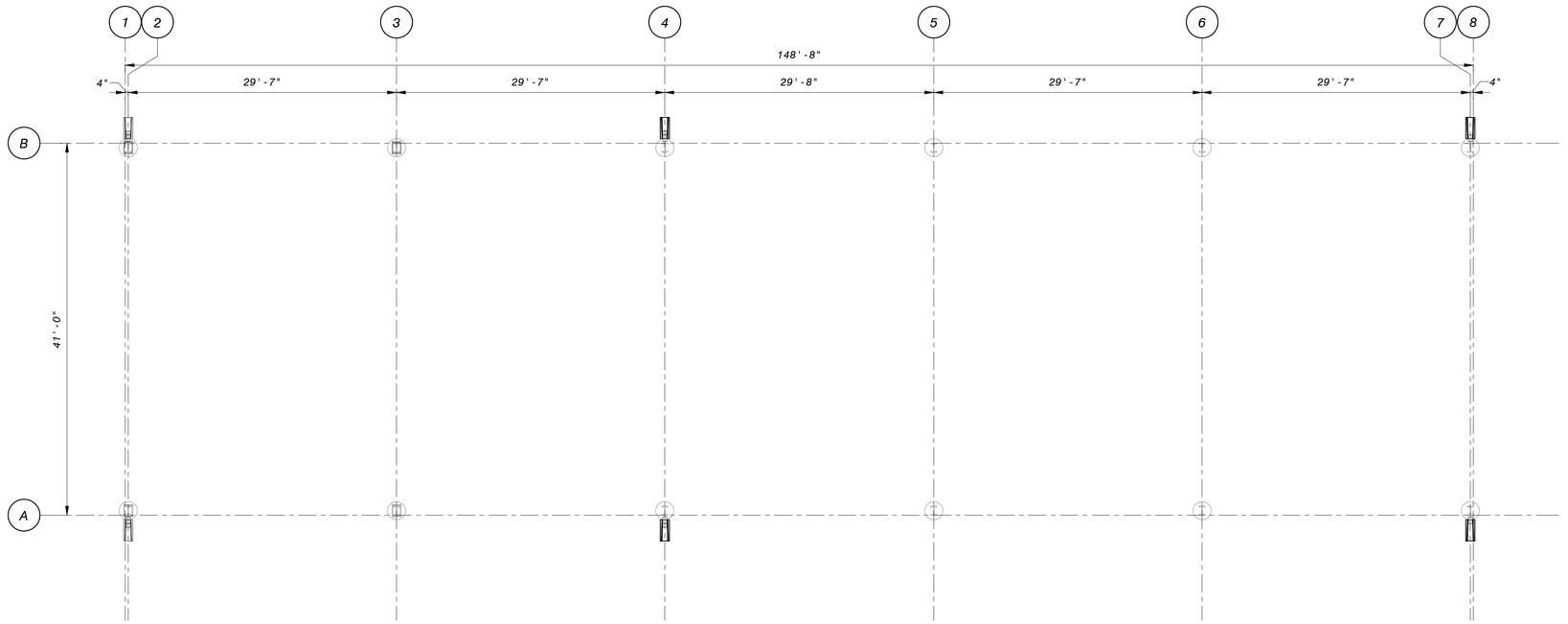

TOP OF CONCRETE

1/8" = 1'-0"

GENERAL SHEET NOTES

SHEET KEYNOTES

8' 4' 0' 8' 16'

1/8" = 1'-0"

90% SUBMITTAL - NOT FOR CONSTRUCTION

NO.	BY	CHK	APP	DATE	REVISIONS AND RECORD OF USE

LICENSED ARCHITECT
BRUCE DOUGLAS FRASER
C 9787
STATE OF CALIFORNIA

FRASER SEIPLE ARCHITECTS

JOINT VENTURE

BLACK & VEATCH

FILANC

CITY OF MORRO BAY
MORRO BAY WATER
RECLAMATION FACILITY (WRF)

WRF PARKING CANOPY
ARCHITECTURAL
FLOOR PLAN

DESIGNED: BDF
DETAILED: ANH
CHECKED: -
APPROVED: -
DATE:

0 1/2 1
IF THIS BAR DOES NOT MEASURE 1" THEN DRAWING IS NOT TO FULL SCALE

PROJECT NO.
400530

14-A-101
SHEET
OF

PLOTTED: 1/21/2020 11:51:50 AM
D400530

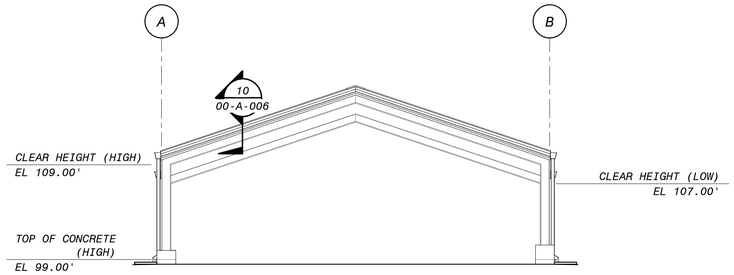

NORTH ELEVATION
1/8" = 1'-0"

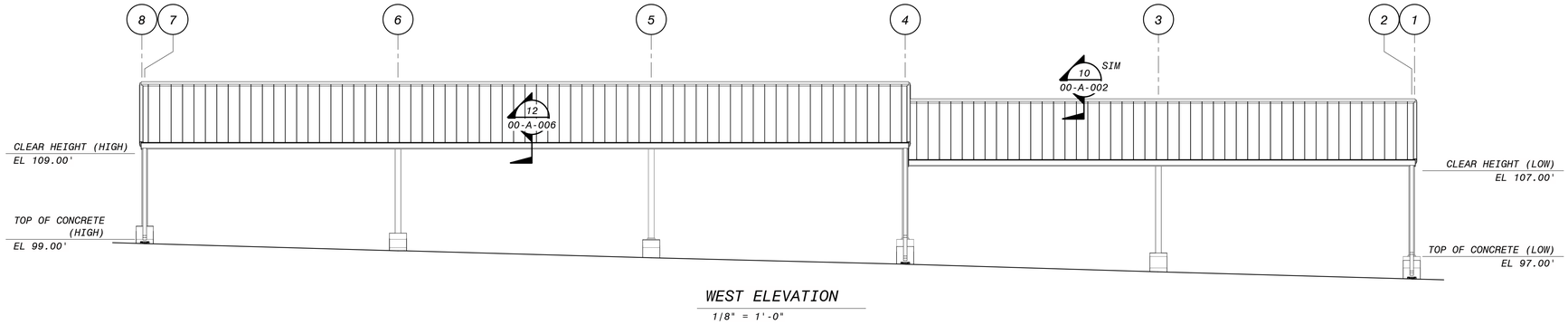

WEST ELEVATION
1/8" = 1'-0"

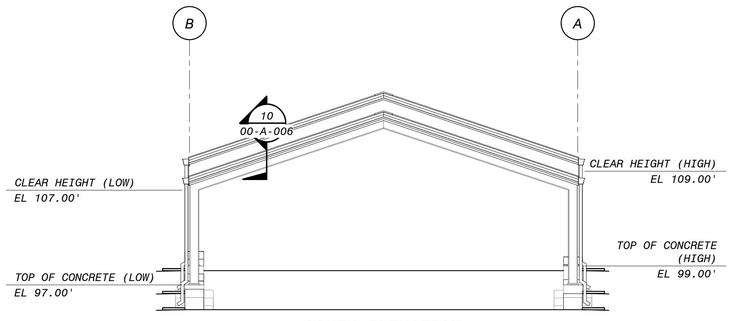

SOUTH ELEVATION
1/8" = 1'-0"

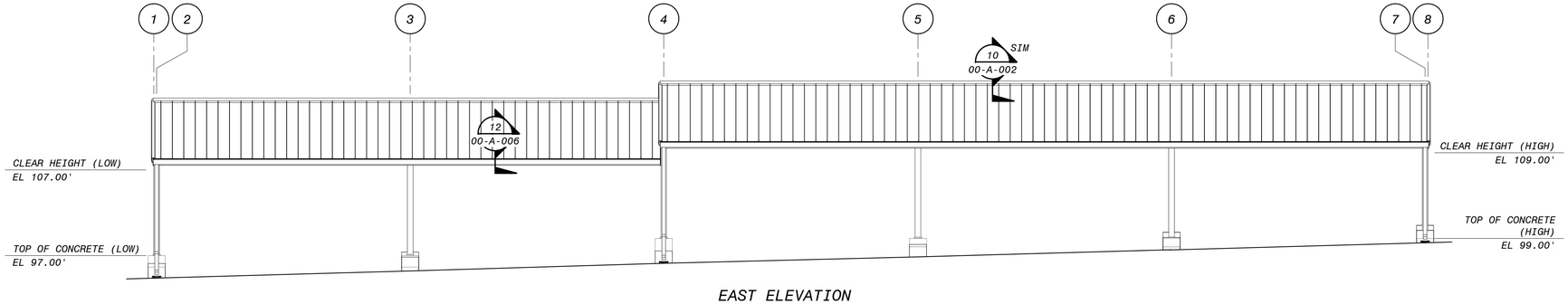

EAST ELEVATION
1/8" = 1'-0"

GENERAL SHEET NOTES

SHEET KEYNOTES

8' 4' 0' 8' 16'
1/8" = 1'-0"

90% SUBMITTAL - NOT FOR CONSTRUCTION

NO.	BY	CHK	APP	DATE	REVISIONS AND RECORD OF USE

LICENSED ARCHITECT
BRUCE DOUGLAS FRASER
C 9787
STATE OF CALIFORNIA

FRASER SEIPLE ARCHITECTS
JOINT VENTURE
BLACK & VEATCH
FILANC

CITY OF MORRO BAY
MORRO BAY WATER
RECLAMATION FACILITY (WRF)

WRF PARKING CANOPY
ARCHITECTURAL
ELEVATIONS

DESIGNED:	BDF
DETAILED:	ANH
CHECKED:	-
APPROVED:	-
DATE:	

0 1/2 1
IF THIS BAR DOES NOT MEASURE 1" THEN DRAWING IS NOT TO FULL SCALE

PROJECT NO.
400530

14-A-201
SHEET
OF

PLOTTED: 1/21/2020 11:51:51 AM
D400530

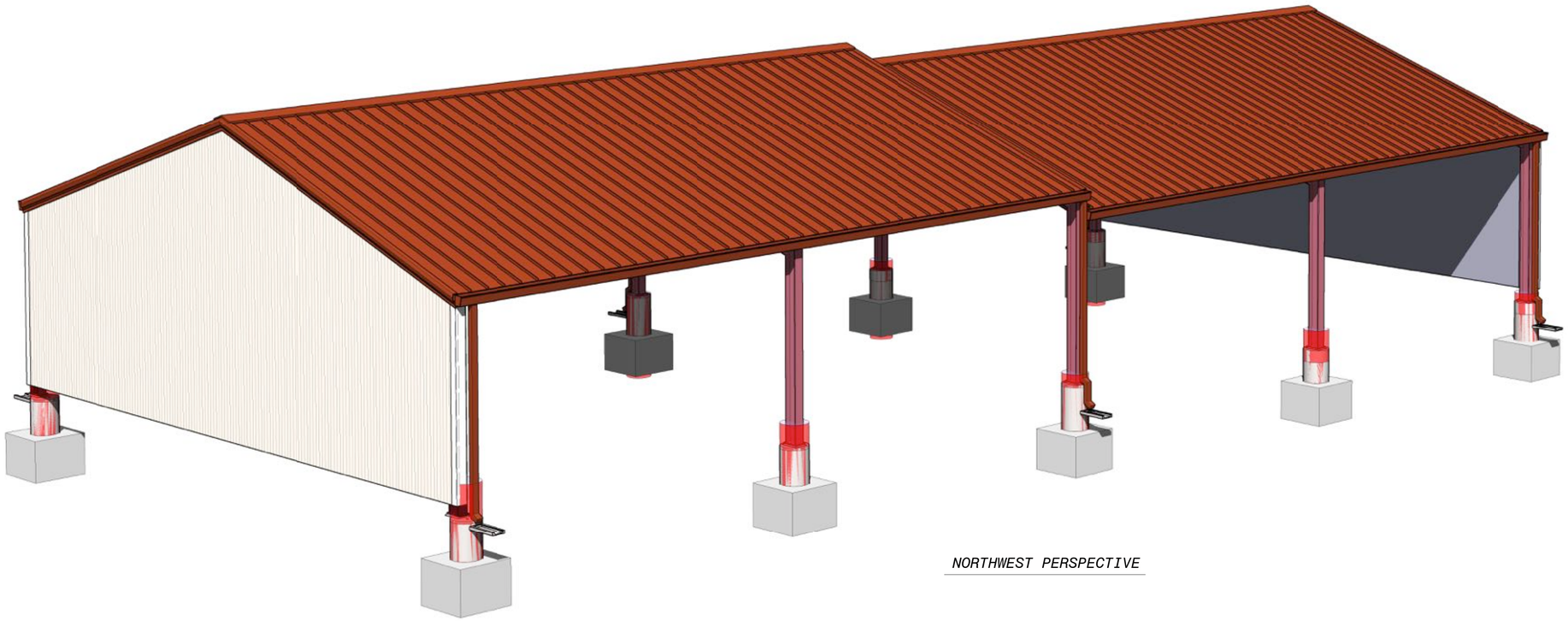

NORTHWEST PERSPECTIVE

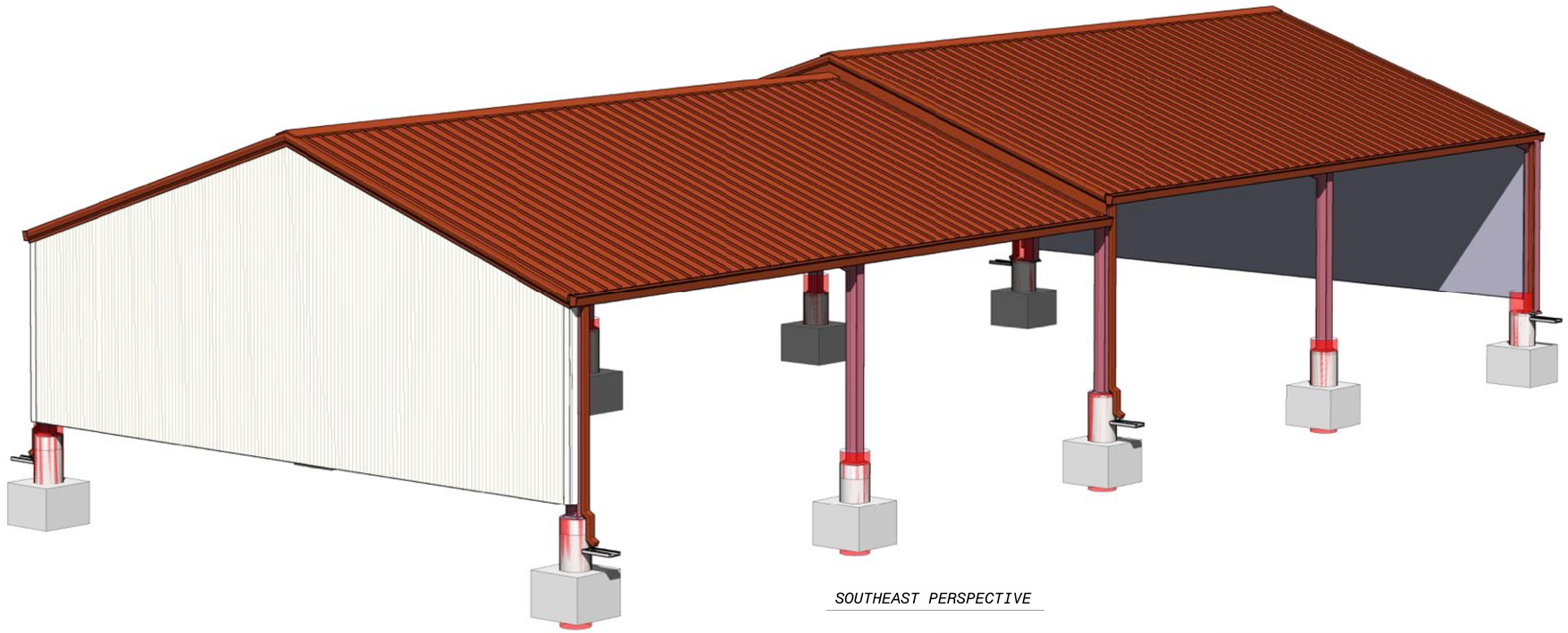

SOUTHEAST PERSPECTIVE

90% SUBMITTAL - NOT FOR CONSTRUCTION

NO.	BY	CHK	APP	DATE	REVISIONS AND RECORD OF USE

LICENSED ARCHITECT
BRUCE DOUGLAS FRASER
C 9787
STATE OF CALIFORNIA

FRASER SEIPLE ARCHITECTS

JOINT VENTURE

BLACK & VEATCH

FILANC

CITY OF MORRO BAY
FILANC BLACK & VEATCH DB PROPOSAL
MORRO BAY WRF

WATER AND COLLECTION VEHICLES EQUIPMENT STORAGE
ARCHITECTURAL PERSPECTIVES

DESIGNED: BDF
DETAILED: ANH
CHECKED: -
APPROVED: -
DATE:

0 1/2 1
IF THIS BAR DOES NOT MEASURE 1" THEN DRAWING IS NOT TO FULL SCALE

PROJECT NO.
400530

15-A-001
SHEET
OF

PLOTTED: 2/13/2020 3:48:24 PM
D400530

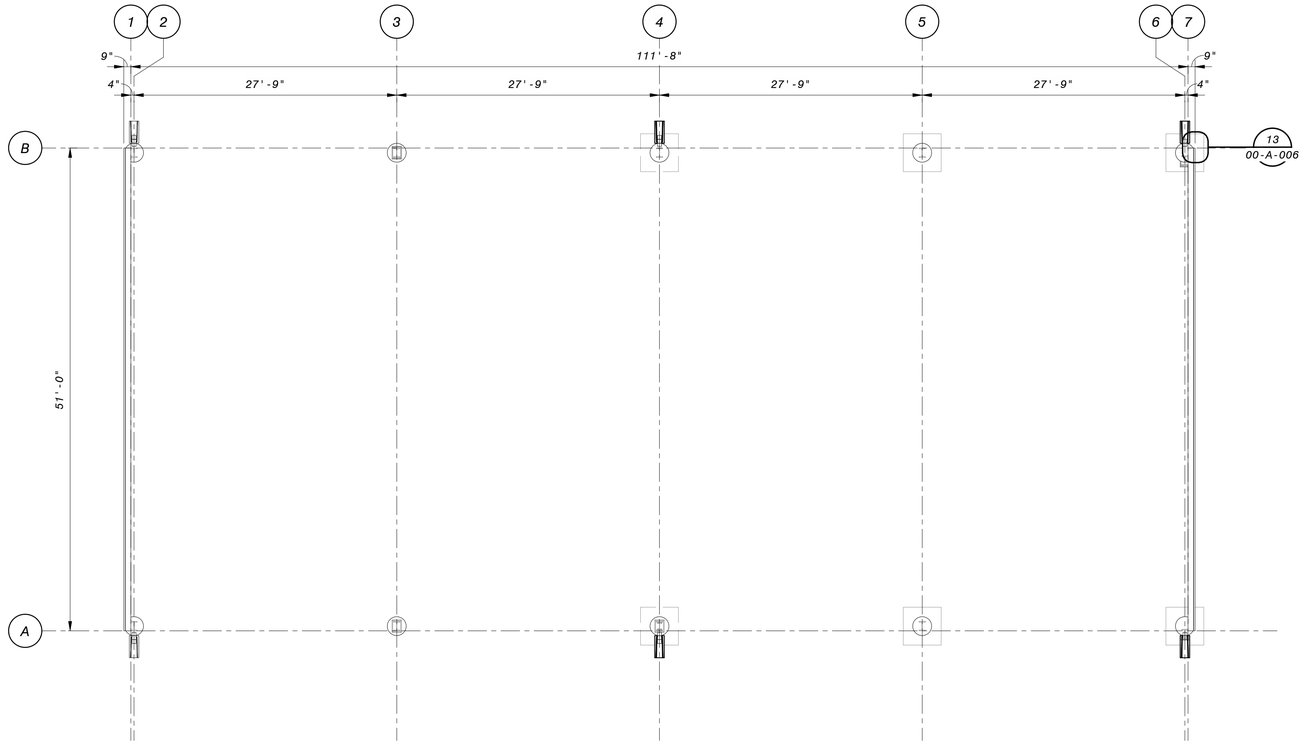

TOP OF CONCRETE

1/8" = 1'-0"

GENERAL SHEET NOTES

SHEET KEYNOTES

8' 4' 0' 8' 16'

1/8" = 1'-0"

90% SUBMITTAL - NOT FOR CONSTRUCTION

NO.	BY	CHK	APP	DATE

REVISIONS AND RECORD OF USE

LICENSED ARCHITECT
BRUCE DOUGLAS FRASER
C 9787
STATE OF CALIFORNIA

FRASER SEIPLE ARCHITECTS

JOINT VENTURE

BLACK & VEATCH

FILANC

CITY OF MORRO BAY
FILANC BLACK & VEATCH DB PROPOSAL
MORRO BAY WRF

WATER AND COLLECTION VEHICLES EQUIPMENT STORAGE
ARCHITECTURAL
TOP OF CONCRETE PLAN

DESIGNED: BDF
DETAILED: ANH
CHECKED: -
APPROVED: -
DATE:

0 1/2 1

IF THIS BAR DOES NOT MEASURE 1" THEN DRAWING IS NOT TO FULL SCALE

PROJECT NO.
400530

15-A-101
SHEET
OF

PLOTTED: 2/13/2020 3:48:25 PM
D400530

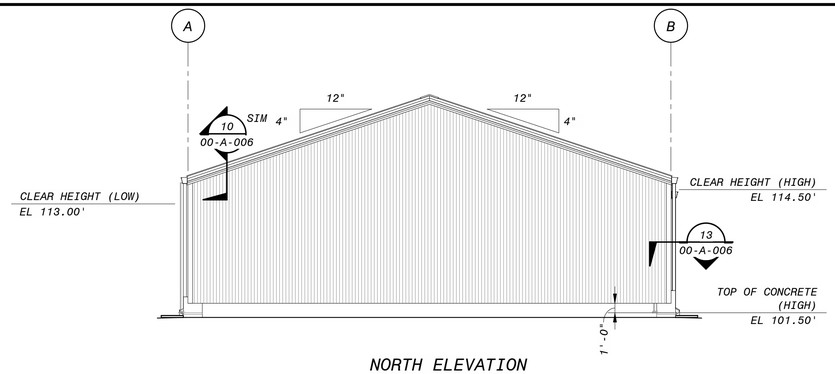

NORTH ELEVATION

1/8" = 1'-0"

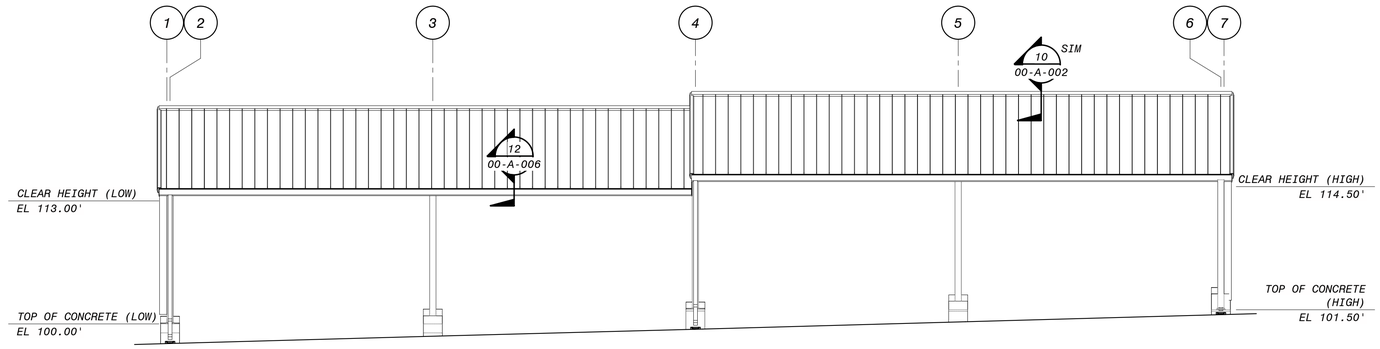

EAST ELEVATION

1/8" = 1'-0"

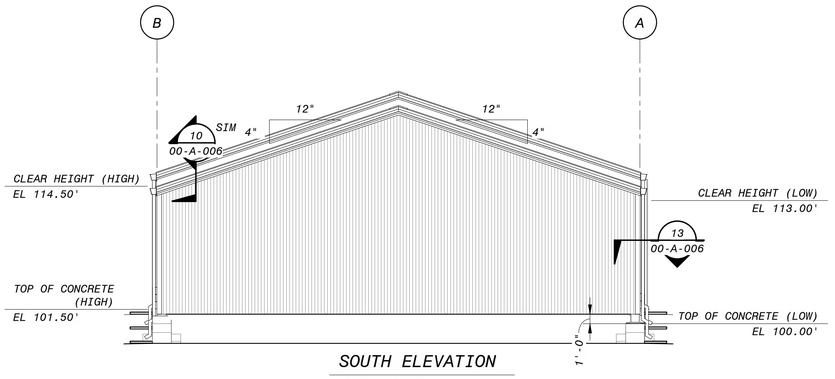

SOUTH ELEVATION

1/8" = 1'-0"

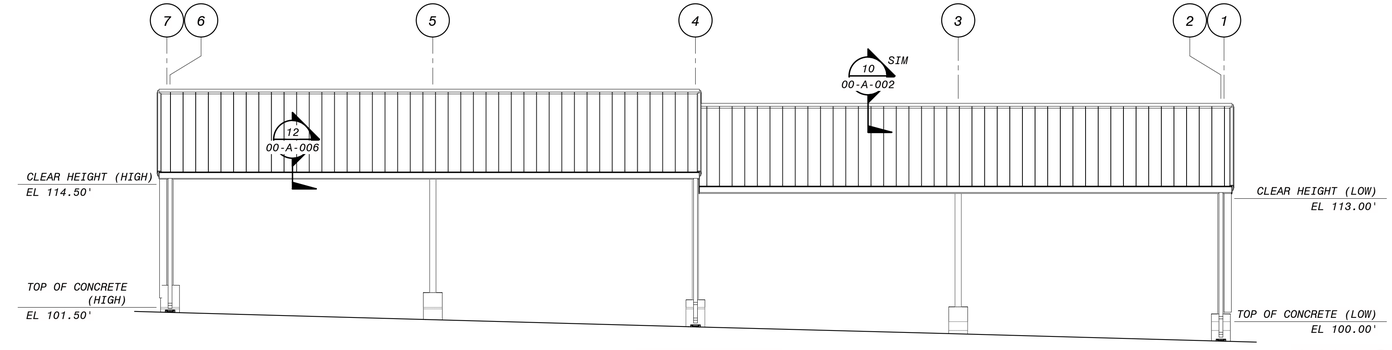

WEST ELEVATION

1/8" = 1'-0"

8' 4' 0' 8' 16'

1/8" = 1'-0"

90% SUBMITTAL - NOT FOR CONSTRUCTION

GENERAL SHEET NOTES

SHEET KEYNOTES

NO.	BY	CHK'D APP'D	DATE	REVISIONS AND RECORD OF USE

LICENSED ARCHITECT
BRUCE DOUGLAS FRASER
C 9787
EXPIRES 12/31/21
STATE OF CALIFORNIA

FRASER SEIPLE ARCHITECTS

JOINT VENTURE

BLACK & VEATCH

FILANC

CITY OF MORRO BAY
FILANC BLACK & VEATCH DB PROPOSAL
MORRO BAY WRF

WATER AND COLLECTION VEHICLES EQUIPMENT STORAGE
ARCHITECTURAL ELEVATIONS

DESIGNED: BDF
DETAILED: ANH
CHECKED: -
APPROVED: -
DATE:

0 1/2 1
IF THIS BAR DOES NOT MEASURE 1" THEN DRAWING IS NOT TO FULL SCALE

PROJECT NO.
400530

15-A-201
SHEET
OF

PLOTTED: 2/13/2020 3:48:26 PM
D400530

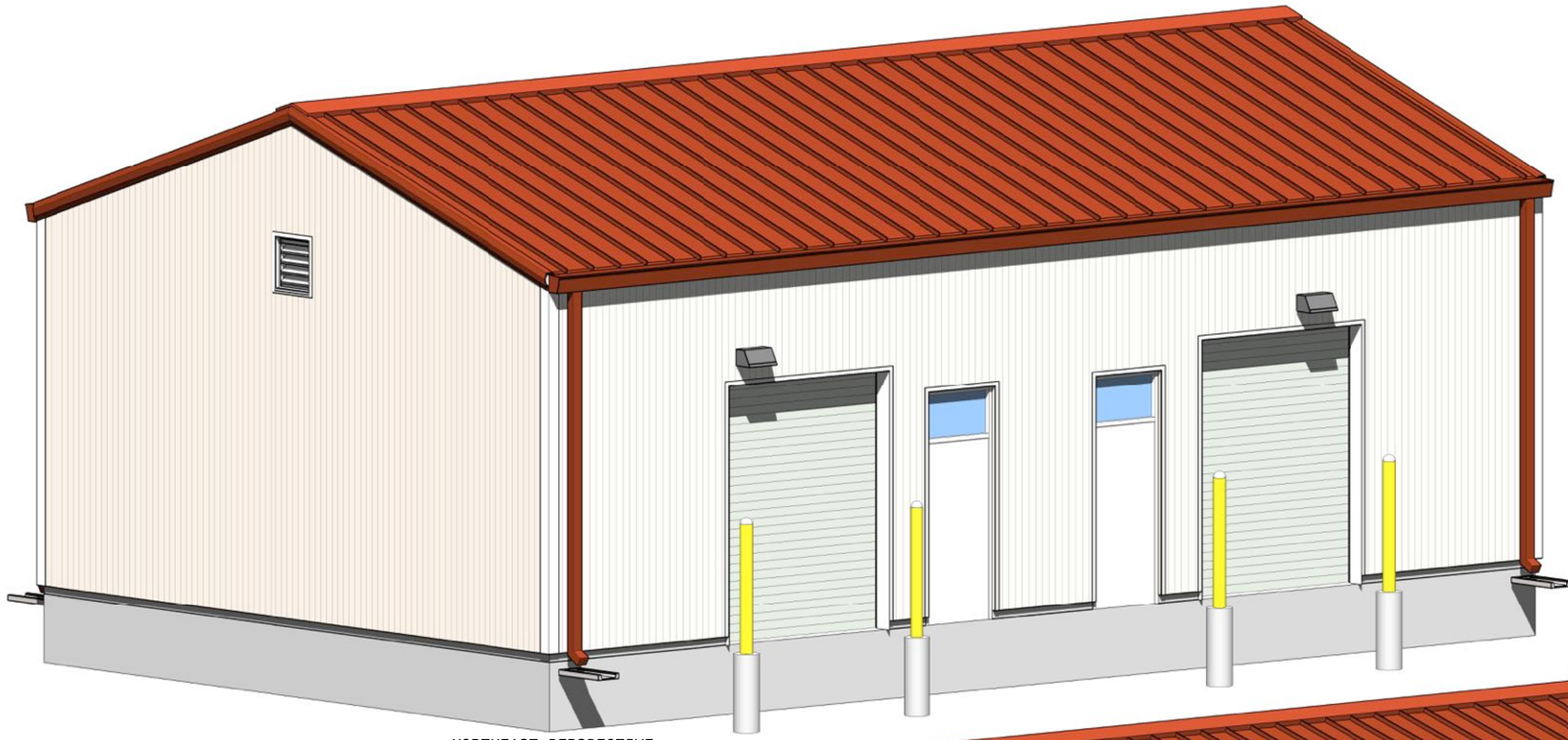

NORTHEAST PERSPECTIVE

NO SCALE

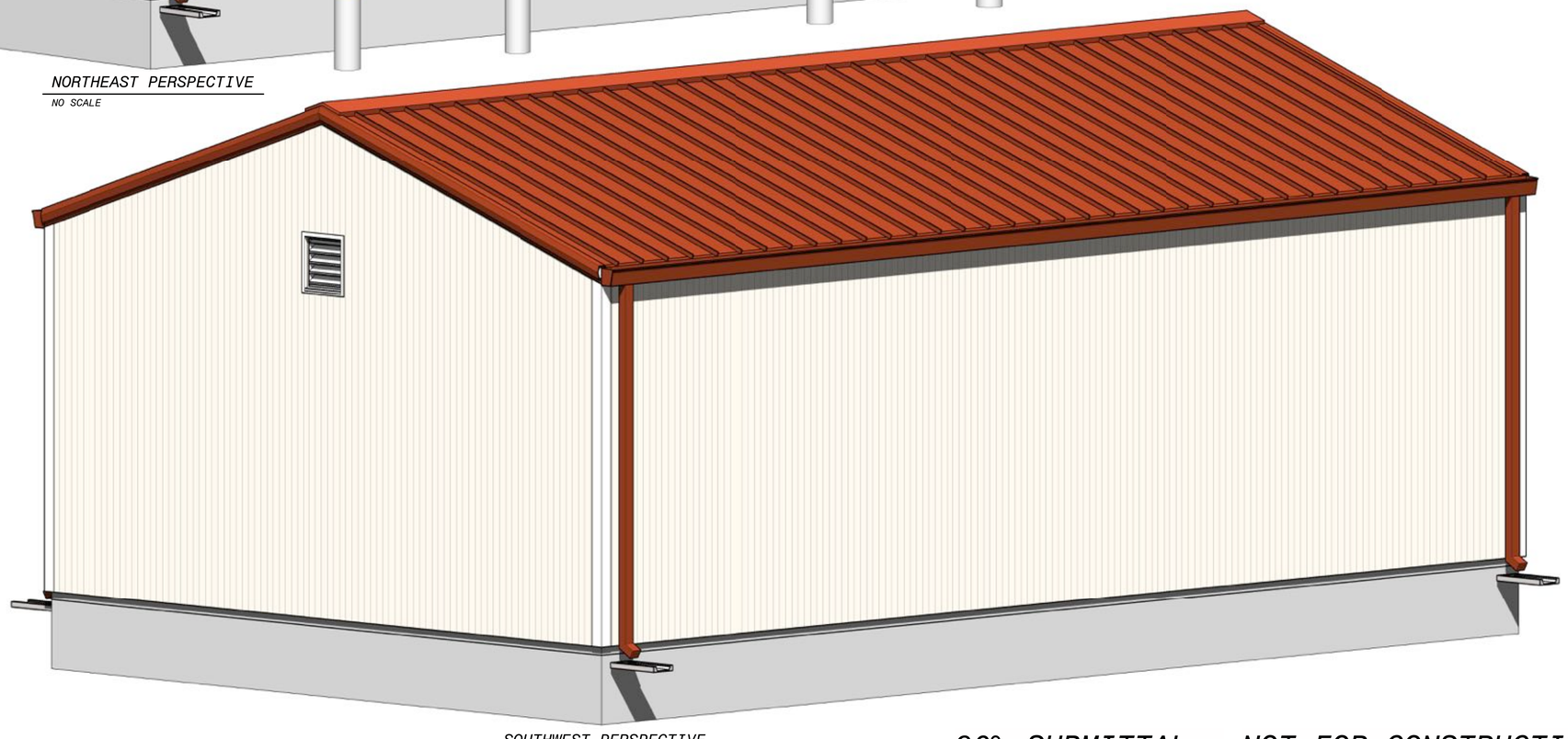

SOUTHWEST PERSPECTIVE

NO SCALE

90% SUBMITTAL - NOT FOR CONSTRUCTION

NO.	BY	CHK	APP	DATE	REVISIONS AND RECORD OF USE
B	BDF	EVB		7/30/2019	60% SUBMITTAL
A	BDF	EVB		3/5/2019	30% SUBMITTAL

LICENSED ARCHITECT
BRUCE DOUGLAS FRASER
C 9787
STATE OF CALIFORNIA

FRASER SEIPLE ARCHITECTS

JOINT VENTURE

BLACK & VEATCH

FILANC

CITY OF MORRO BAY
MORRO BAY WATER
RECLAMATION FACILITY (WRF)

WATER AND COLLECTION SUPPLIES STORAGE SHED
ARCHITECTURAL
PERSPECTIVES

DESIGNED: BDF
DETAILED: ANH
CHECKED: -
APPROVED: -
DATE:

0 1/2 1
IF THIS BAR DOES NOT MEASURE 1" THEN DRAWING IS NOT TO FULL SCALE

PROJECT NO.
400530

16-A-001
SHEET
OF

PLOTTED: 3/13/2020 4:28:58 PM
D400530

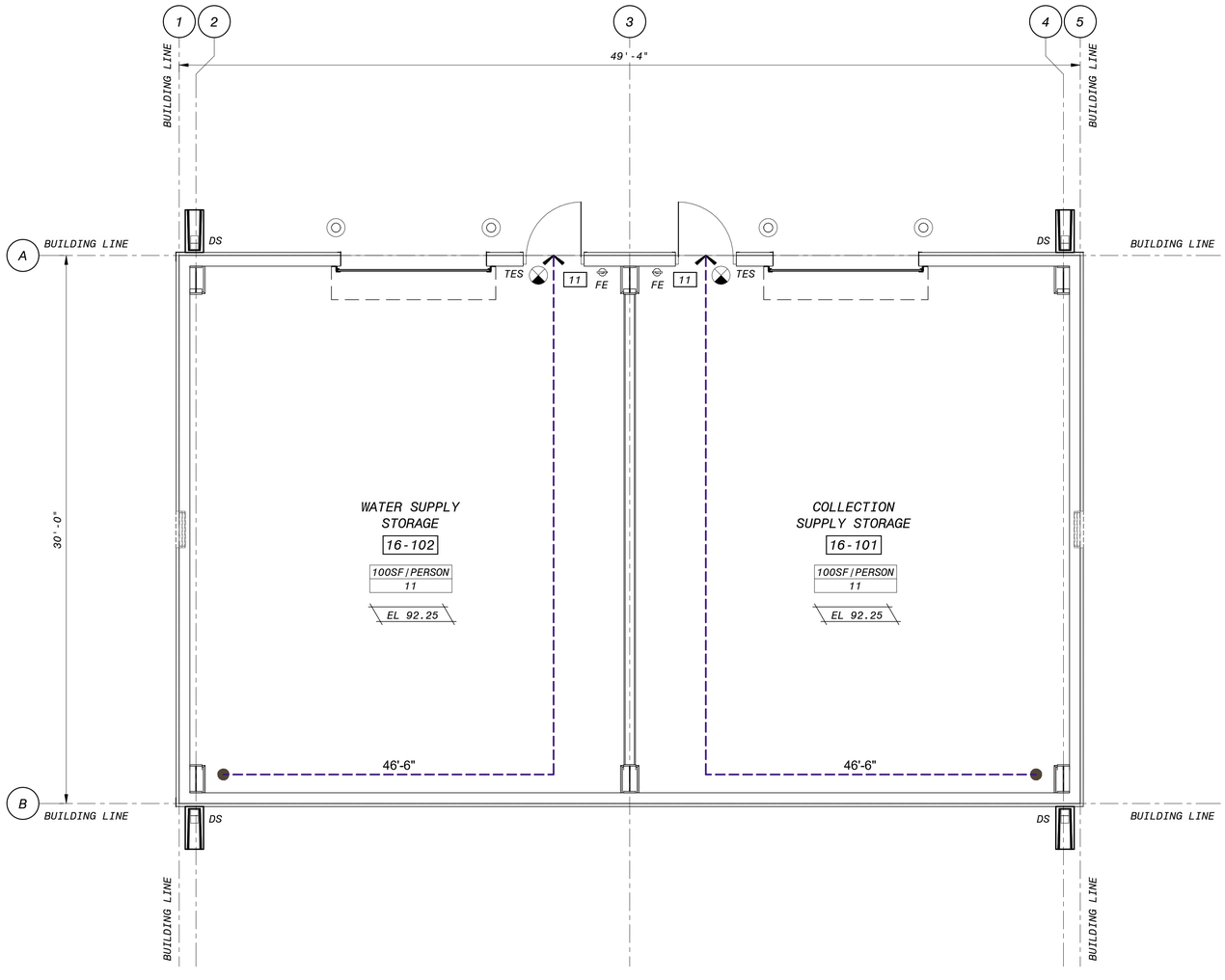

LIFE SAFETY PLAN

1/4" = 1'-0"

GENERAL SHEET NOTES

1. BUILDING CONSTRUCTION TYPE IS II-B OCCUPANCY IS F-2 (LOW HAZARD FACTORY INDUSTRIAL)
2. WALLS CEILINGS AND ROOFS NOT OTHERWISE IDENTIFIED ARE NOT FIRE RATED

SHEET KEYNOTES

1. BUILDING CONSTRUCTION TYPE IS II-B OCCUPANCY IS F-2 (LOW HAZARD FACTORY INDUSTRIAL)
2. WALLS CEILINGS AND ROOFS NOT OTHERWISE IDENTIFIED ARE NOT FIRE RATED

LIFE SAFETY LEGEND

	FIRE EXTINGUISHER (FE)
X'-X"	PATH OF EGRESS TRAVEL
100SF/PERSON / 10	OCCUPANTS PER SF / OCCUPANT LOAD
5	CUMULATIVE OCCUPANT LOAD AT EXIT
	EXIT SYMBOL
TES	TACTILE EXIT SIGN
AL	ACTIVE LEAF
DS	DOWNSPOUT

BUILDING CODE ANALYSIS

WATER AND COLLECTION SUPPLIES STORAGE	
APPLICABLE BUILDING CODES: 2016 CALIFORNIA BUILDING STANDARDS CODE	
OCCUPANCY	F-2
ACTUAL FLOOR AREA	1,510 SF TOTAL
ACTUAL HEIGHT	1 STORY (20.25 FT)
TYPE OF CONSTRUCTION	TYPE II-B
ALLOWABLE HEIGHT	2 STORIES (55 FT)
ALLOWABLE AREA	92,000 SF
DESIGN OCCUPANT LOAD	22 PERSONS
ADA ACCESSIBILITY	YES
OCCUPANCY SEPARATION	NOT REQUIRED
FIRE SPRINKLERS	NOT REQUIRED

4' 2' 0' 4' 8'

1/4" = 1'-0"

90% SUBMITTAL - NOT FOR CONSTRUCTION

NO.	BY	CHK	APP	DATE	REVISIONS AND RECORD OF USE
B	BDF	EVB		7/30/2019	60% SUBMITTAL

LICENSED ARCHITECT BRUCE DOUGLAS FRASER C 9787 STATE OF CALIFORNIA

FRASER SEIPLE ARCHITECTS

JOINT VENTURE

BLACK & VEATCH

FILANC

CITY OF MORRO BAY
MORRO BAY WATER
RECLAMATION FACILITY (WRF)

WATER AND COLLECTION SUPPLIES STORAGE SHED
ARCHITECTURAL
LIFE SAFETY PLAN

DESIGNED: BDF
DETAILED: ANH
CHECKED: -
APPROVED: -
DATE:

0 1/2 1

IF THIS BAR DOES NOT MEASURE 1" THEN DRAWING IS NOT TO FULL SCALE

PROJECT NO.
400530

16-A-101
SHEET
OF

PLOTTED: 3/13/2020 4:28:58 PM
D400530

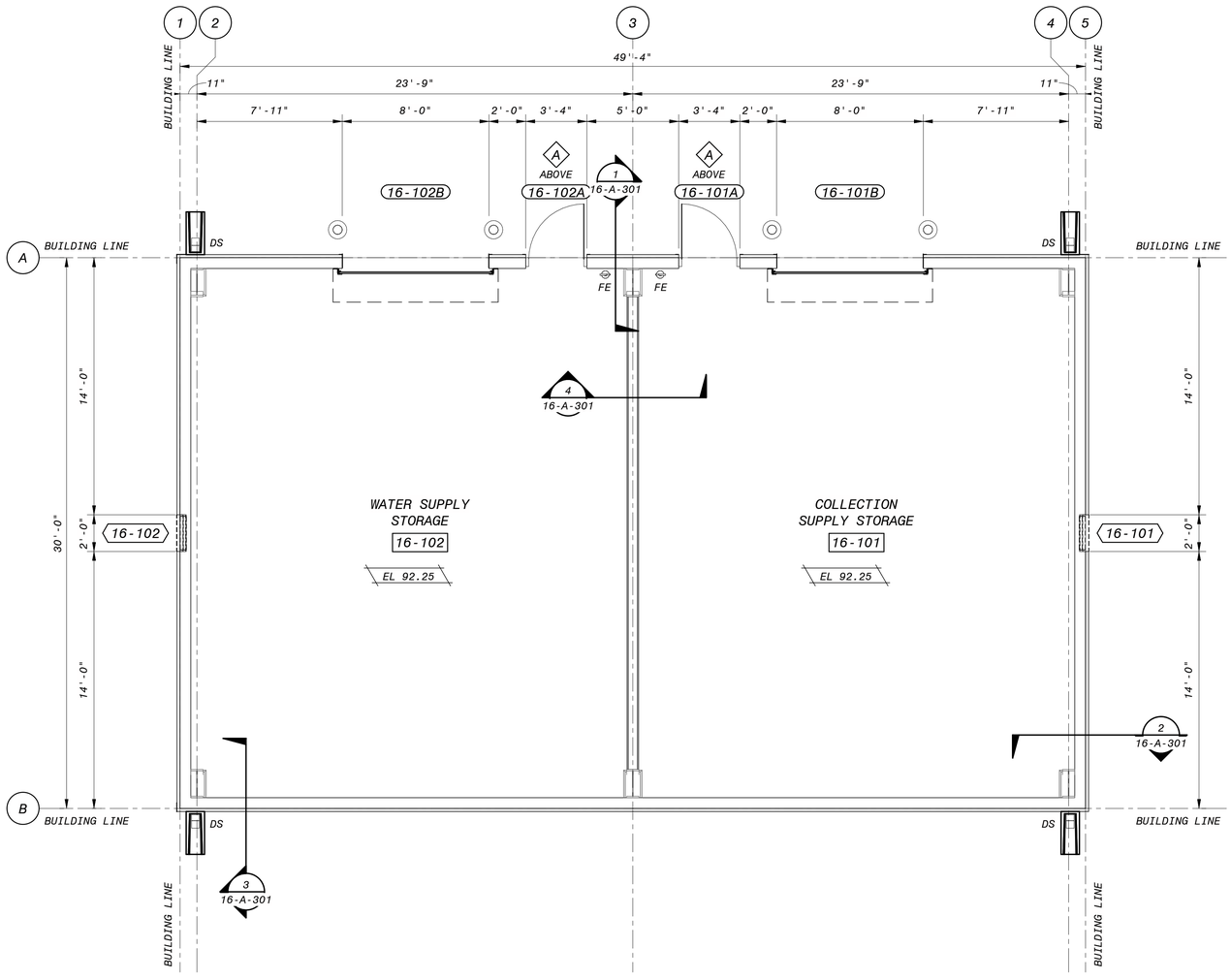

OPERATING FLOOR PLAN

1/4" = 1'-0"

GENERAL SHEET NOTES

SHEET KEYNOTES

LEGEND

X	ACCESSORY ITEM
101A	DOOR
H1	ACCESS HATCH
00	LABORATORY CABINET
101A	LOUVER
A	WALL or WALL PANEL TYPE
W	WINDOW
WS	WINDOW SYSTEM or FRAME TYPE
ROOM NAME 101	ROOM NAME & NUMBER

4' 2' 0' 4' 8'

1/4" = 1'-0"

90% SUBMITTAL - NOT FOR CONSTRUCTION

NO.	BY	CHK	APP	DATE	REVISIONS AND RECORD OF USE
B	BDF	EVB		7/30/2019	60% SUBMITTAL

LICENSED ARCHITECT
BRUCE DOUGLAS FRASER
C 9787
STATE OF CALIFORNIA

FRASER SEIPLE ARCHITECTS
JOINT VENTURE
BLACK & VEATCH
FILANC

CITY OF MORRO BAY
MORRO BAY WATER
RECLAMATION FACILITY (WRF)

WATER AND COLLECTION SUPPLIES STORAGE SHED
ARCHITECTURAL
OPERATING FLOOR PLAN

DESIGNED: BDF
DETAILED: ANH
CHECKED: -
APPROVED: -
DATE:

0 1/2 1
IF THIS BAR DOES NOT MEASURE 1" THEN DRAWING IS NOT TO FULL SCALE

PROJECT NO.
400530

16-A-102
SHEET
OF

PLOTTED: 3/13/2020 4:28:59 PM
D400530

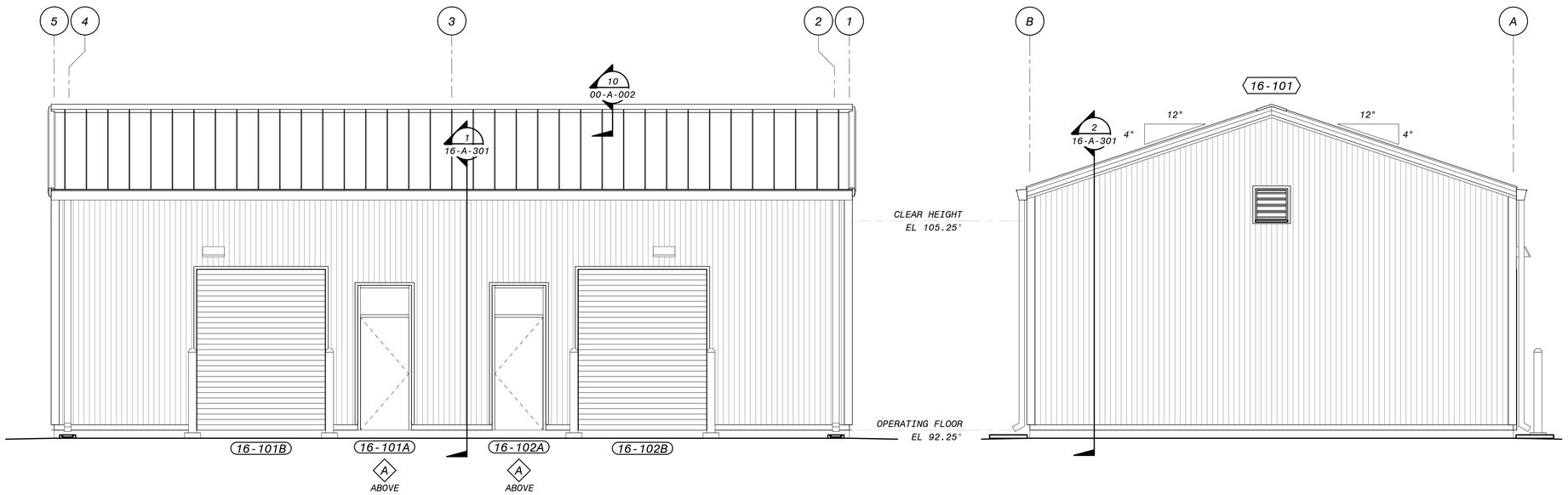

NORTH ELEVATION

1/4" = 1'-0"

EAST ELEVATION

1/4" = 1'-0"

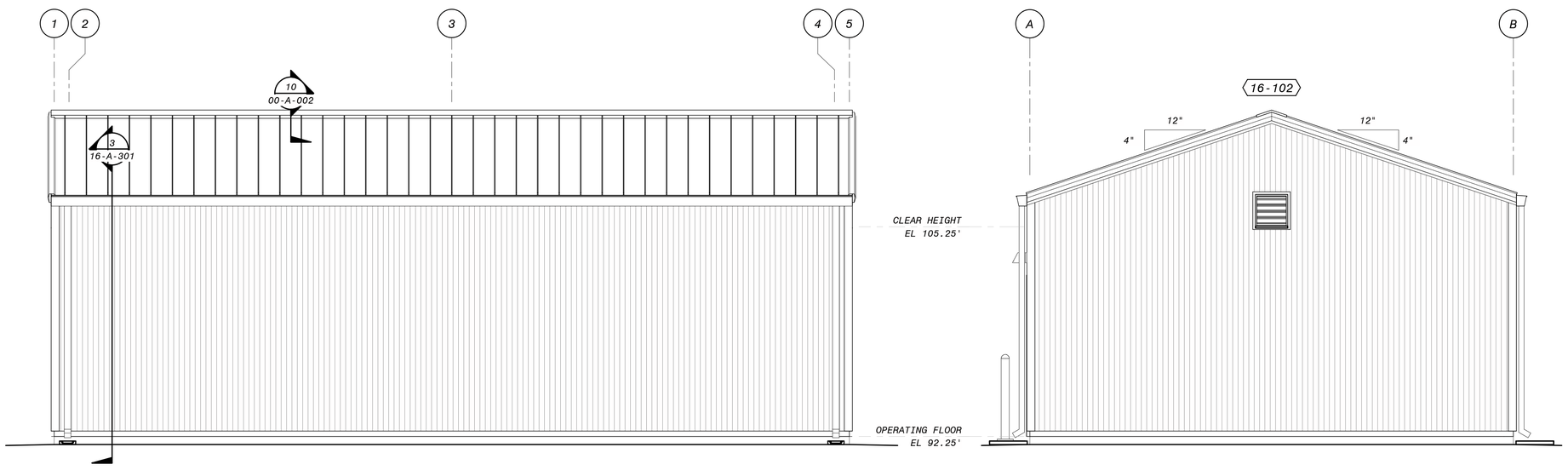

SOUTH ELEVATION

1/4" = 1'-0"

WEST ELEVATION

1/4" = 1'-0"

4' 2' 0' 4' 8'

1/4" = 1'-0"

90% SUBMITTAL - NOT FOR CONSTRUCTION

GENERAL SHEET NOTES

SHEET KEYNOTES

NO.	BY	CHK	APP'D	DATE	REVISIONS AND RECORD OF USE
B	BDF	EVB		7/30/2019	60% SUBMITTAL

LICENSED ARCHITECT
BRUCE DOUGLAS FRASER
C 9787
EXPIRES 12/31/21
STATE OF CALIFORNIA

FRASER SEIPLE ARCHITECTS

JOINT VENTURE

BLACK & VEATCH

FILANC

CITY OF MORRO BAY
MORRO BAY WATER
RECLAMATION FACILITY (WRF)

WATER AND COLLECTION SUPPLIES STORAGE SHED
ARCHITECTURAL
BUILDING ELEVATIONS

DESIGNED: BDF
DETAILED: ANH
CHECKED: -
APPROVED: -
DATE:

0 1/2 1
IF THIS BAR DOES NOT MEASURE 1" THEN DRAWING IS NOT TO FULL SCALE

PROJECT NO.
400530

16-A-201
SHEET
OF

PLOTTED: 3/13/2020 4:29:01 PM
D400530

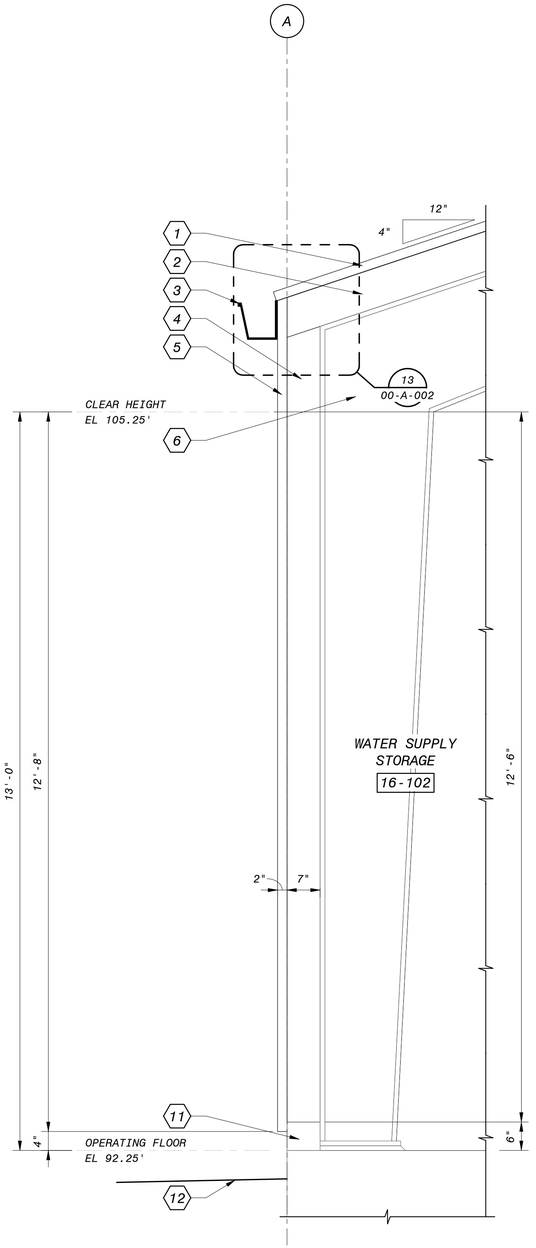

1 SECTION
16-A-102 3/4" = 1'-0"

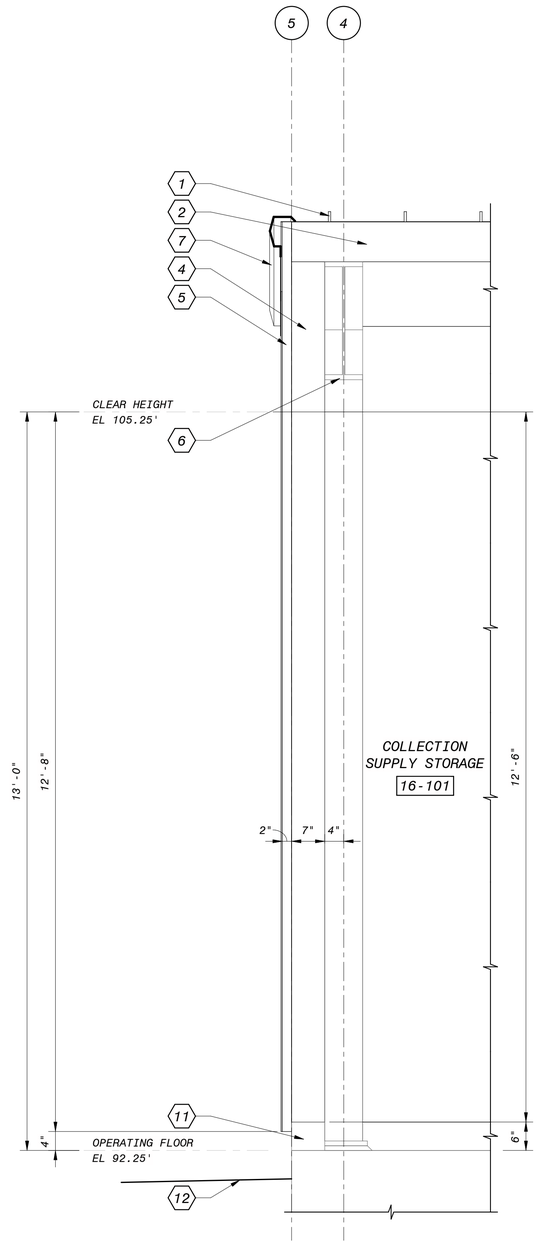

2 SECTION
16-A-102 3/4" = 1'-0"

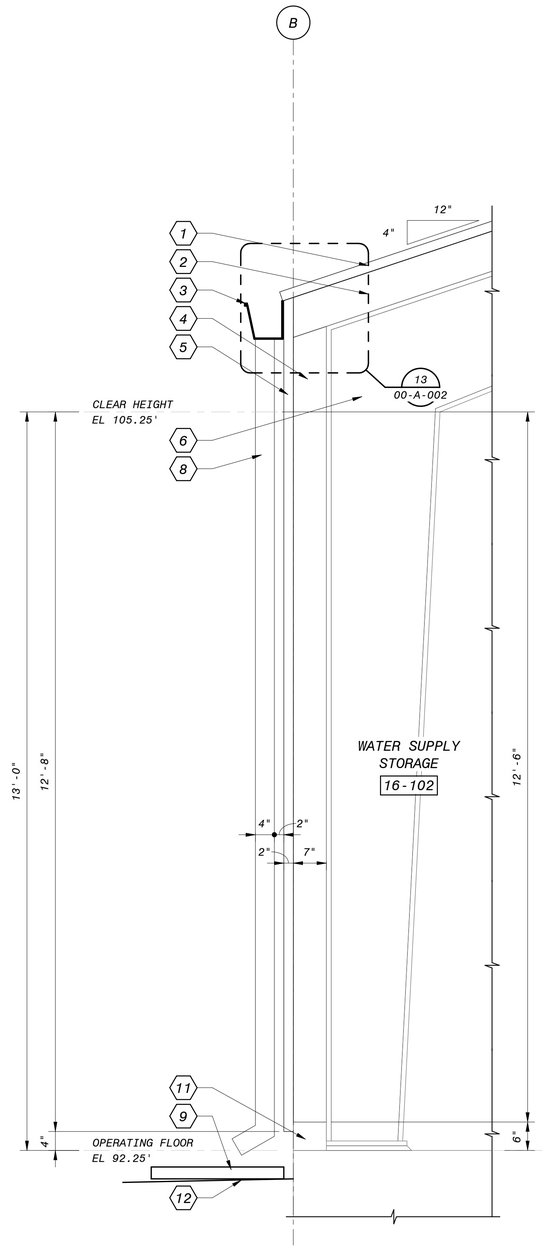

3 SECTION
16-A-102 3/4" = 1'-0"

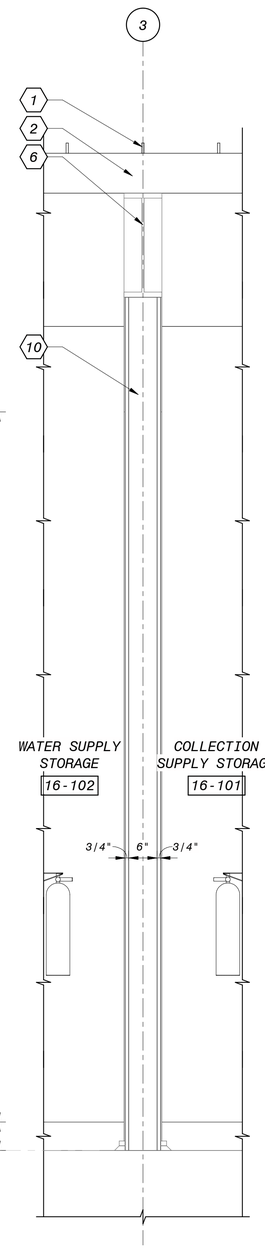

4 SECTION
16-A-102 3/4" = 1'-0"

12" 6" 0' 1' 2' 3'
3/4" = 1'-0"

90% SUBMITTAL - NOT FOR CONSTRUCTION

GENERAL SHEET NOTES

SHEET KEYNOTES

1. METAL ROOFING PANELS
2. PURLIN FRAMING SPACE
3. PRE-FINISHED METAL FASCIA GUTTER
4. WALL GIRT FRAMING SPACE
5. PRE-FINISHED RIBBED METAL SIDING
6. PRE-ENGINEERED FRAME PER METAL BUILDING MANUFACTURER
7. PRE-FINISHED METAL RAKE TRIM
8. PRE-FINISHED METAL DOWNSPOUT
9. PRECAST CONCRETE SPLASH BLOCK
10. 6" METAL STUD WALL W/ 5/8" GYPSUM BOARD ON BOTH SIDES
11. CONCRETE PERIMETER CURB - SEE STRUCTURAL DRAWINGS
12. FINISHED GRADE

NO.	BY	CHK	APP	DATE	REVISIONS AND RECORD OF USE
B				7/30/2019	60% SUBMITTAL

LICENSED ARCHITECT
BRUCE DOUGLAS FRASER
C 9787
REGISTERED PROFESSIONAL
STATE OF CALIFORNIA

FRASER SEIPLE ARCHITECTS
JOINT VENTURE
BLACK & VEATCH
FILANC

CITY OF MORRO BAY
MORRO BAY WATER
RECLAMATION FACILITY (WRF)

WATER AND COLLECTION SUPPLIES STORAGE SHED
ARCHITECTURAL
WALL SECTIONS

DESIGNED: BDF
DETAILED: ANH
CHECKED: -
APPROVED: -
DATE:

0 1/2 1
IF THIS BAR DOES NOT MEASURE 1" THEN DRAWING IS NOT TO FULL SCALE

PROJECT NO.
400530

16-A-301
SHEET
OF

PLOTTED: 3/13/2020 4:29:02 PM
D400530

ROOM FINISH SCHEDULE

ROOM No.	ROOM NAME	FLOOR		WALLS												CEILING			REMARKS
				NORTH			EAST			SOUTH			WEST						
		MATERIAL	FINISH	MATERIAL	FINISH	BASE	MATERIAL	FINISH	BASE	MATERIAL	FINISH	BASE	MATERIAL	FINISH	BASE	MATERIAL	FINISH	HEIGHT	
SUPPLY STORAGE																			
16-101	COLLECTION SUPPLY STORAGE	CO	FS	EXP	FF	NO	EXP	FF	NO	EXP	FF	NO	GWB	PT	NO	EXP	FF	13'-0"	
16-102	WATER SUPPLY STORAGE	CO	FS	EXP	FF	NO	GWB	PT	NO	EXP	FF	NO	EXP	FF	NO	EXP	FF	13'-0"	

DOOR SCHEDULE

DOOR ID	DOOR SIZE			DOOR							FRAME				REMARKS
No. (D)		WIDTH	HEIGHT	MATERIAL	HEAD	JAMB	SILL	TYPE (D)	HARDWARE	RATING	MATERIAL	HEAD	JAMB	DEPTH	
SUPPLY STORAGE															
16-101A		3'-0"	7'-0"	FRP	30 SIM/00-A-001	33/00-A-001	40/00-A-001	A	13	-	FRP	2"	2"		SEE FRAME SYSTEM A
16-101B		8'-0"	10'-0"	RS	41 SIM/00-A-001	41 AND 42/00-A-001	-	-	-	-	RS			0"	
16-102A		3'-0"	7'-0"	FRP	30 SIM/00-A-001	33/00-A-001	40/00-A-001	A	13	-	FRP	2"	2"		SEE FRAME SYSTEM A
16-102B		8'-0"	10'-0"	RS	41 SIM/00-A-001	41 AND 42/00-A-001	-	-	-	-	RS			0"	

WINDOW SYSTEM AND FRAME TYPE SCHEDULE

QTY	TYPE (WS)	OPENING		WINDOW							COMMENTS
		WIDTH	HEIGHT	MATERIAL	HEAD	JAMB	MULLION	SILL	GLASS	TOP ELEV	
SUPPLY STORAGE											
2	A	3'-4"	9'-0"	FRP	30 SIM/00-A-001	33 SIM/00-A-001	-	-	SINGLE PANE - CLEAR	102.00'	SEE DOOR SCHEDULE

LOUVER SCHEDULE

LOUVER ID	OPENING		LOUVER					REMARKS
No. (L)	WIDTH	HEIGHT	TYPE	HEAD	JAMB	SILL	TOP ELEV	
SUPPLY STORAGE								
16-101	2'-0"	2'-0"	ALUM	-	-	-	107.25	
16-102	2'-0"	2'-0"	ALUM	-	-	-	107.25	

GENERAL SHEET NOTES

CO - CONCRETE
EXP - EXPOSED CONSTRUCTION
FF - FACTORY FINISH
FRP - FIBER REINFORCED PLASTIC
FS - FLOOR SEALER
GWB - GYPSUM WALLBOARD
NO - NONE
PT - PAINTED
RS - ROLLING STEEL

DOOR TYPES

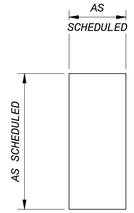

A

WINDOW TYPES

BDF BDF EVB
CHK APP
NO. BY
REVISIONS AND RECORD OF USE
DATE

LICENSED ARCHITECT
BRUCE DOUGLAS FRASER
C 9787
REGISTERED PROFESSIONAL
STATE OF CALIFORNIA

FRASER SEIPLE ARCHITECTS
JOINT VENTURE
BLACK & VEATCH
FILANC

CITY OF MORRO BAY
MORRO BAY WATER
RECLAMATION FACILITY (WRF)

WATER AND COLLECTION SUPPLIES STORAGE SHED
ARCHITECTURAL
SCHEDULES

DESIGNED: BDF
DETAILED: ANH
CHECKED: -
APPROVED: -
DATE:

0 1/2 1
IF THIS BAR DOES NOT MEASURE 1" THEN DRAWING IS NOT TO FULL SCALE

PROJECT NO.
400530

16-A-601
SHEET
OF

90% SUBMITTAL - NOT FOR CONSTRUCTION

PLOTTED: 3/13/2020 4:29:04 PM
D400530

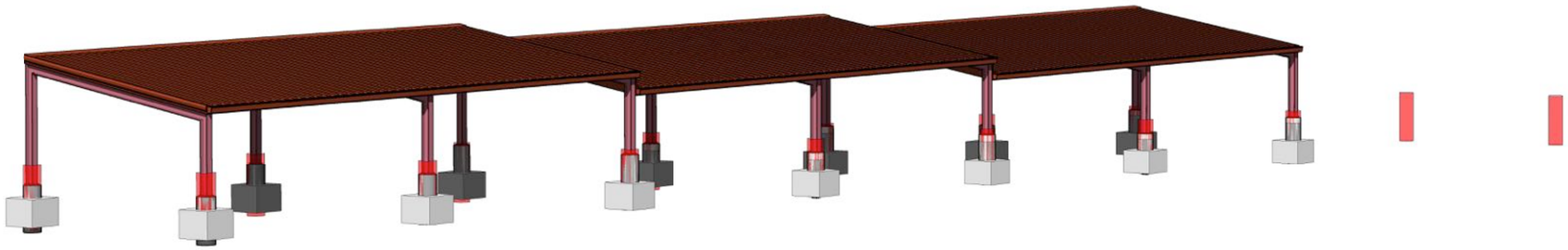

NORHTWEST PERSPECTIVE

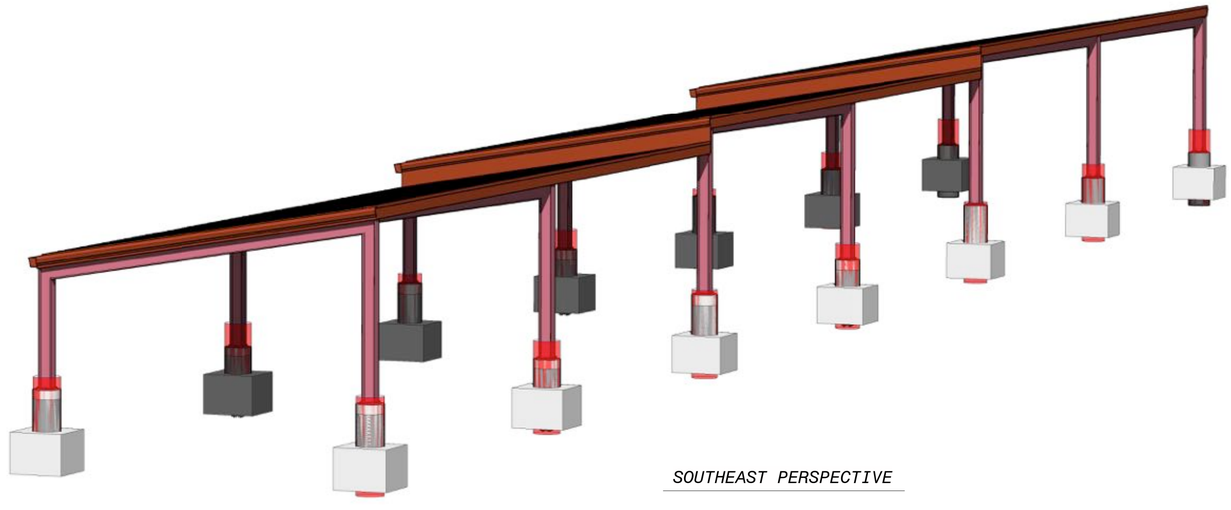

SOUTHEAST PERSPECTIVE

90% SUBMITTAL - NOT FOR CONSTRUCTION

NO.	BY	CHK	APP	DATE	REVISIONS AND RECORD OF USE
A	EVB	BDF	EVB	3/6/2019	30% SUBMITTAL

LICENSED ARCHITECT
BRUCE DOUGLAS FRASER
C 9787
STATE OF CALIFORNIA

FRASER SEIPLE ARCHITECTS

JOINT VENTURE

BLACK & VEATCH

FILANC

CITY OF MORRO BAY
MORRO BAY WATER
RECLAMATION FACILITY (WRF)

CORPORATION YARD AREA
ARCHITECTURAL
PERSPECTIVES

DESIGNED: BDF
DETAILED: ANH
CHECKED: -
APPROVED: -
DATE:

0 1/2 1
IF THIS BAR DOES NOT MEASURE 1" THEN DRAWING IS NOT TO FULL SCALE

PROJECT NO.
400530

17-A-001
SHEET
OF

PLOTTED: 1/21/2020 3:32:24 PM
D400530

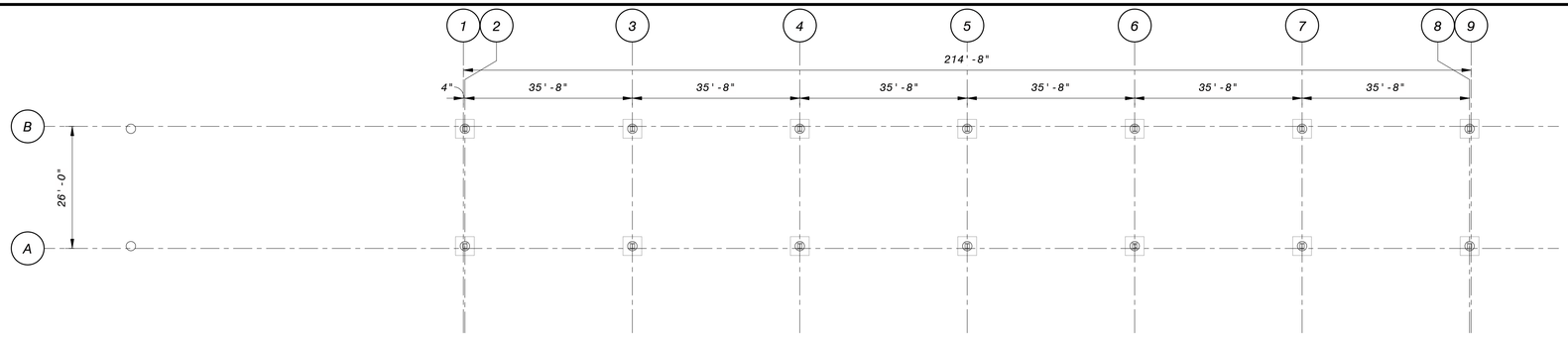

OVERALL PLAN

1/16" = 1'-0"

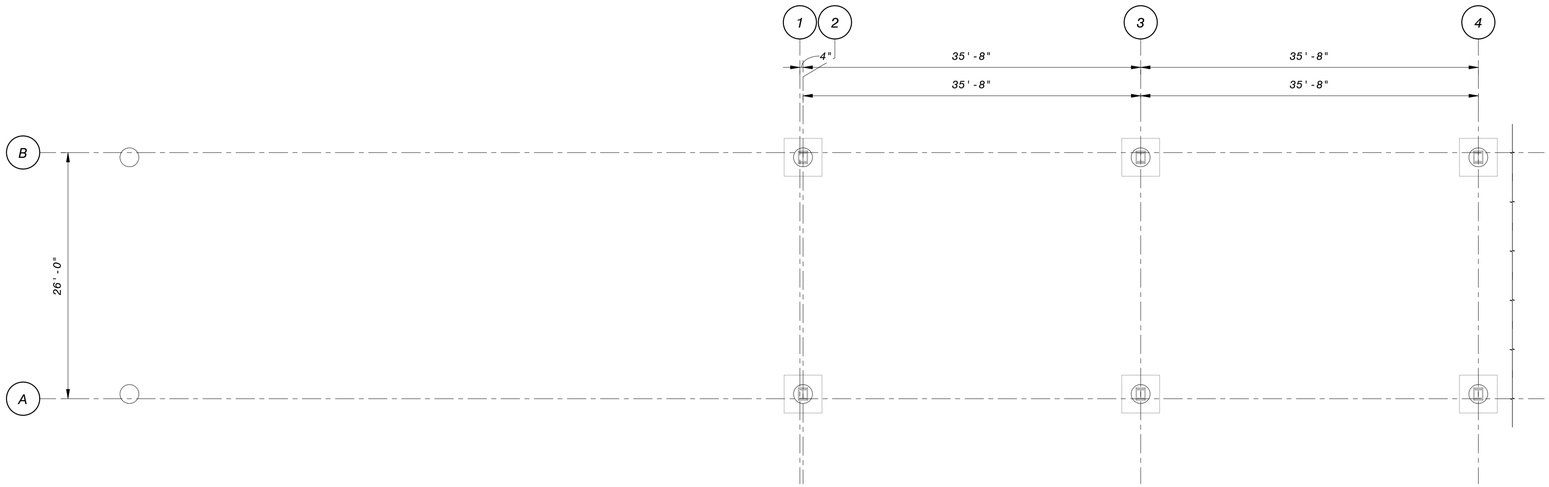

ENLARGED PARTIAL PLAN - SOUTH

1/8" = 1'-0"

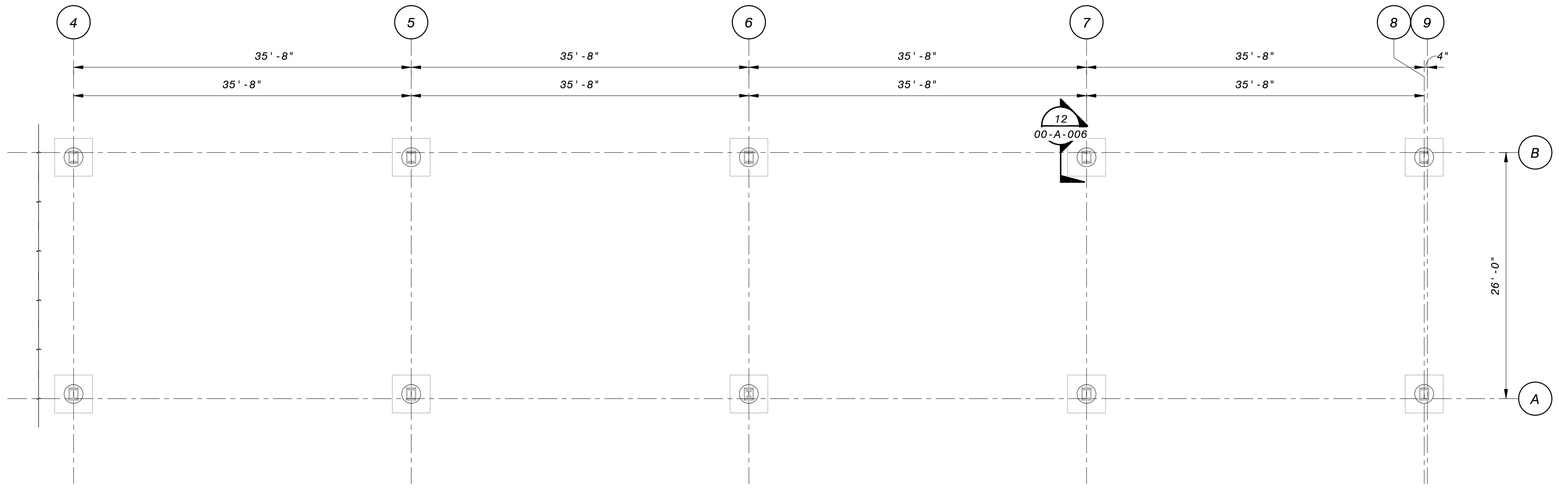

ENLARGED PARTIAL PLAN - NORTH

1/8" = 1'-0"

GENERAL SHEET NOTES

SHEET KEYNOTES

8' 4' 0' 8' 16'

1/8" = 1'-0"

16' 12' 8' 4' 0' 16' 32'

1/16" = 1'-0"

90% SUBMITTAL - NOT FOR CONSTRUCTION

NO.	BY	CHK	APP	DATE	REVISIONS AND RECORD OF USE

LICENSED ARCHITECT
BRUCE DOUGLAS FRASER
C 9787
STATE OF CALIFORNIA

FRASER SEMPLE ARCHITECTS

JOINT VENTURE

BLACK & VEATCH

FILANC

CITY OF MORRO BAY
MORRO BAY WATER
RECLAMATION FACILITY (WRF)

CORPORATION YARD AREA
ARCHITECTURAL
OVERALL AND ENLARGED PLANS

DESIGNED: BDF
DETAILED: ANH
CHECKED: -
APPROVED: -
DATE:

0 1/2 1

IF THIS BAR DOES NOT MEASURE 1" THEN DRAWING IS NOT TO FULL SCALE

PROJECT NO.
400530

17-A-101
SHEET
OF

PLOTTED: 11/21/2020 3:32:24 PM
D400530

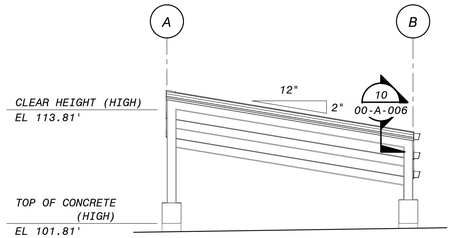

NORTH ELEVATION

1/8" = 1'-0"

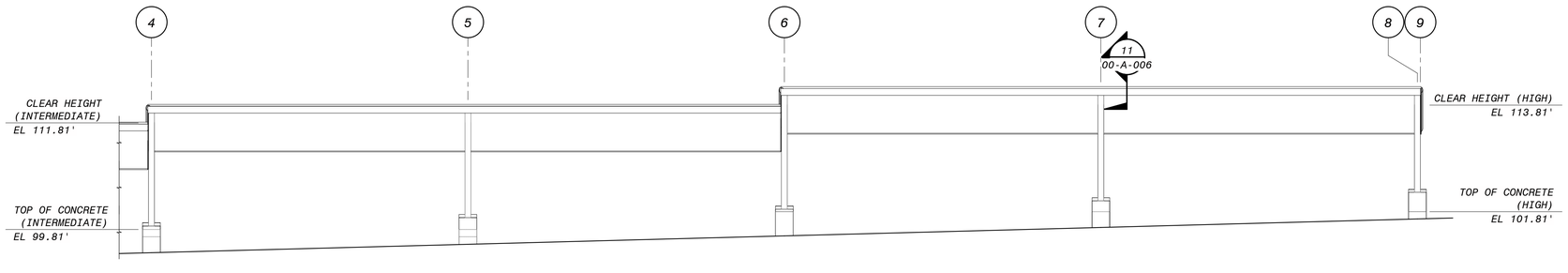

EAST ELEVATION - NORTH

1/8" = 1'-0"

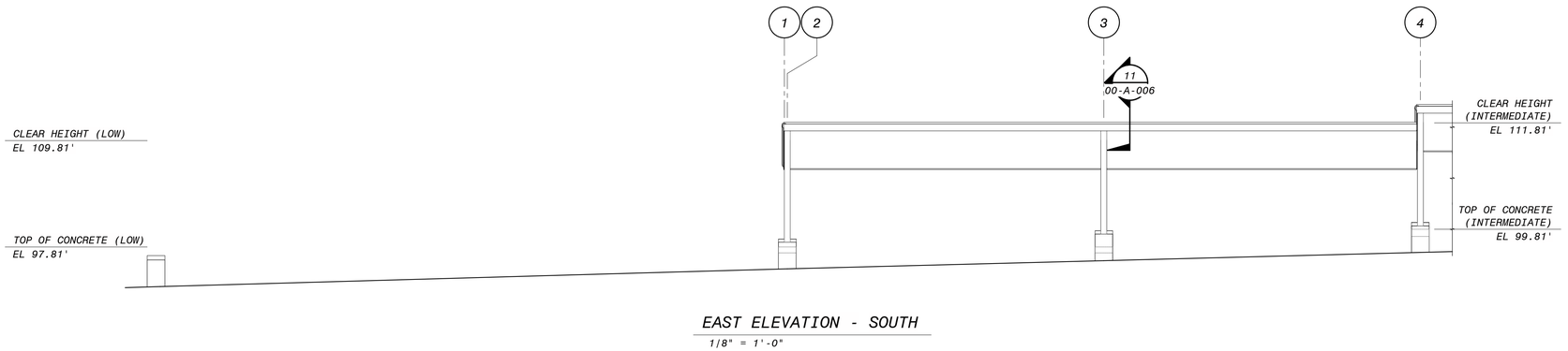

EAST ELEVATION - SOUTH

1/8" = 1'-0"

8' 4' 0' 8' 16'

1/8" = 1'-0"

90% SUBMITTAL - NOT FOR CONSTRUCTION

GENERAL SHEET NOTES

SHEET KEYNOTES

NO.	BY	CHK APP	DATE	REVISIONS AND RECORD OF USE

LICENSED ARCHITECT
BRUCE DOUGLAS FRASER
C 9787
STATE OF CALIFORNIA

FRASER SEMPLE ARCHITECTS
JOINT VENTURE
BLACK & VEATCH
FILANC

CITY OF MORRO BAY
MORRO BAY WATER
RECLAMATION FACILITY (WRF)

CORPORATION YARD AREA
ARCHITECTURAL
ELEVATIONS

DESIGNED: BDF
DETAILED: ANH
CHECKED: -
APPROVED: -
DATE:

0 1/2 1
IF THIS BAR DOES NOT MEASURE 1" THEN DRAWING IS NOT TO FULL SCALE

PROJECT NO.
400530

17-A-201
SHEET
OF

PLOTTED: 1/21/2020 3:32:25 PM
D400530

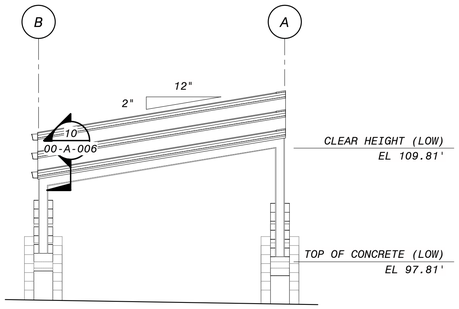

SOUTH ELEVATION

1/8" = 1'-0"

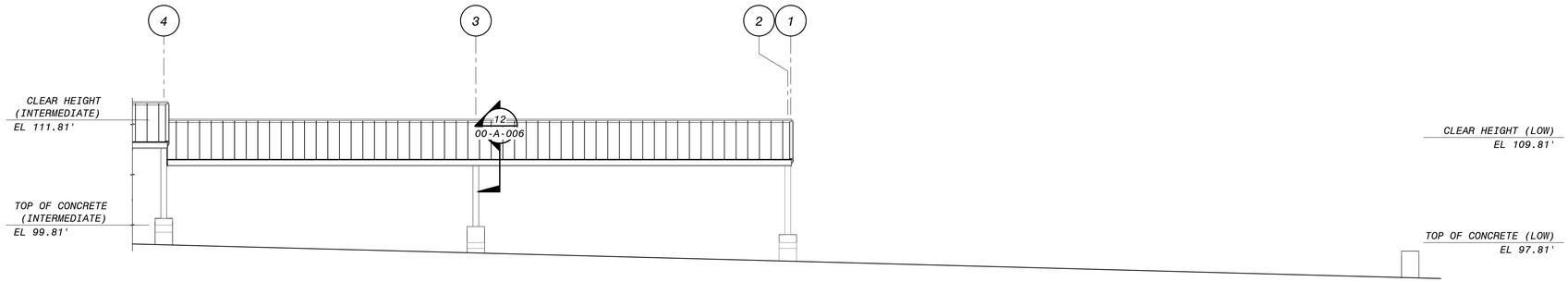

WEST ELEVATION - SOUTH

1/8" = 1'-0"

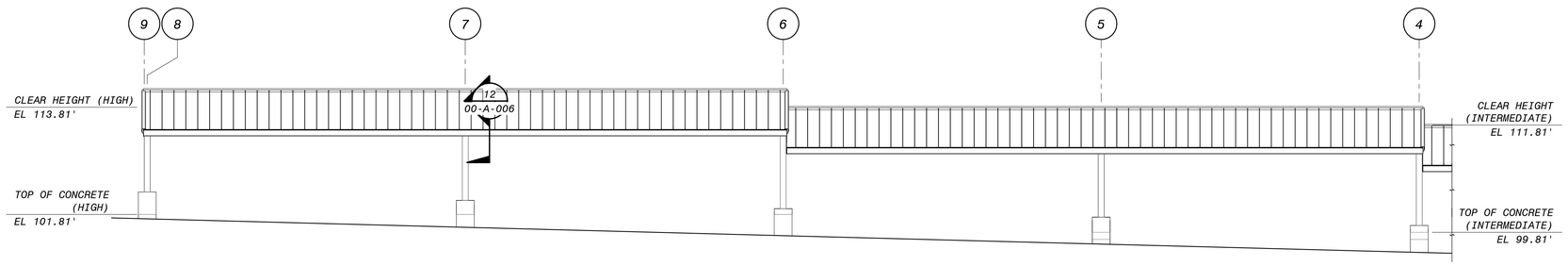

WEST ELEVATION - NORTH

1/8" = 1'-0"

GENERAL SHEET NOTES

SHEET KEYNOTES

NO.	BY	CHK	APP'D	DATE	REVISIONS AND RECORD OF USE

LICENSED ARCHITECT
BRUCE DOUGLAS FRASER
C 9787
STATE OF CALIFORNIA

FRASER SEMPLE ARCHITECTS
JOINT VENTURE
BLACK & VEATCH
FILANC

CITY OF MORRO BAY
MORRO BAY WATER
RECLAMATION FACILITY (WRF)

CORPORATION YARD AREA
ARCHITECTURAL
ELEVATIONS

DESIGNED: BDF
DETAILED: ANH
CHECKED: -
APPROVED: -
DATE:

0 1/2 1
IF THIS BAR DOES NOT MEASURE 1" THEN DRAWING IS NOT TO FULL SCALE

PROJECT NO.
400530

17-A-202
SHEET
OF

8' 4' 0' 8' 16'
1/8" = 1'-0"

90% SUBMITTAL - NOT FOR CONSTRUCTION

PLOTTED: 1/21/2020 3:32:27 PM
D400530

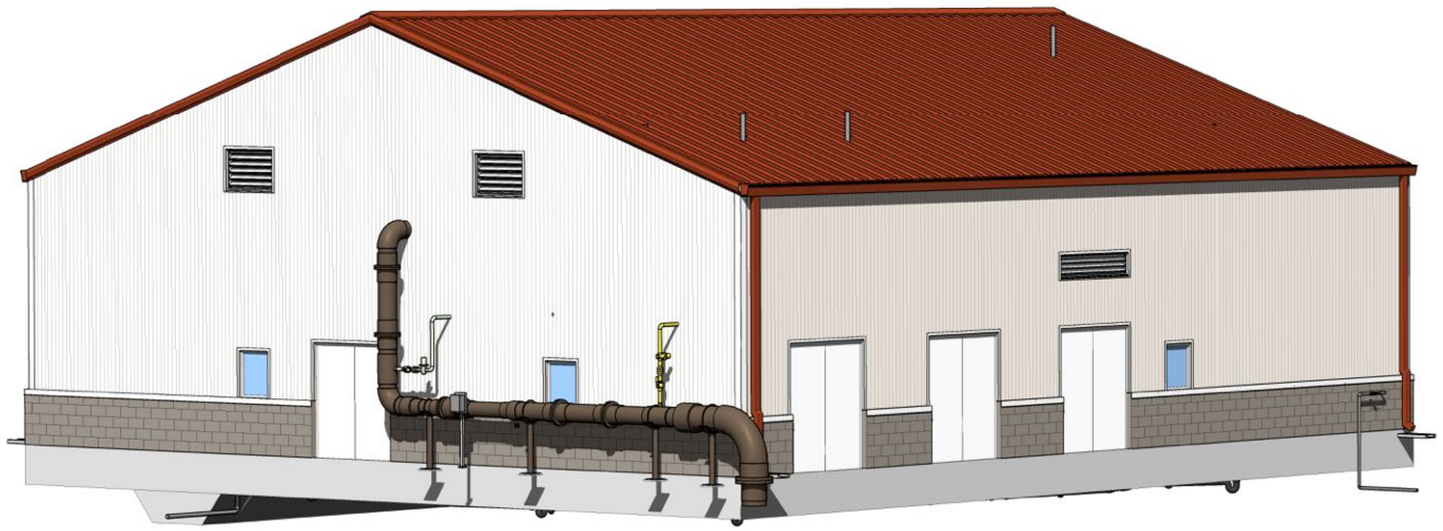

NORTHWEST PERSPECTIVE

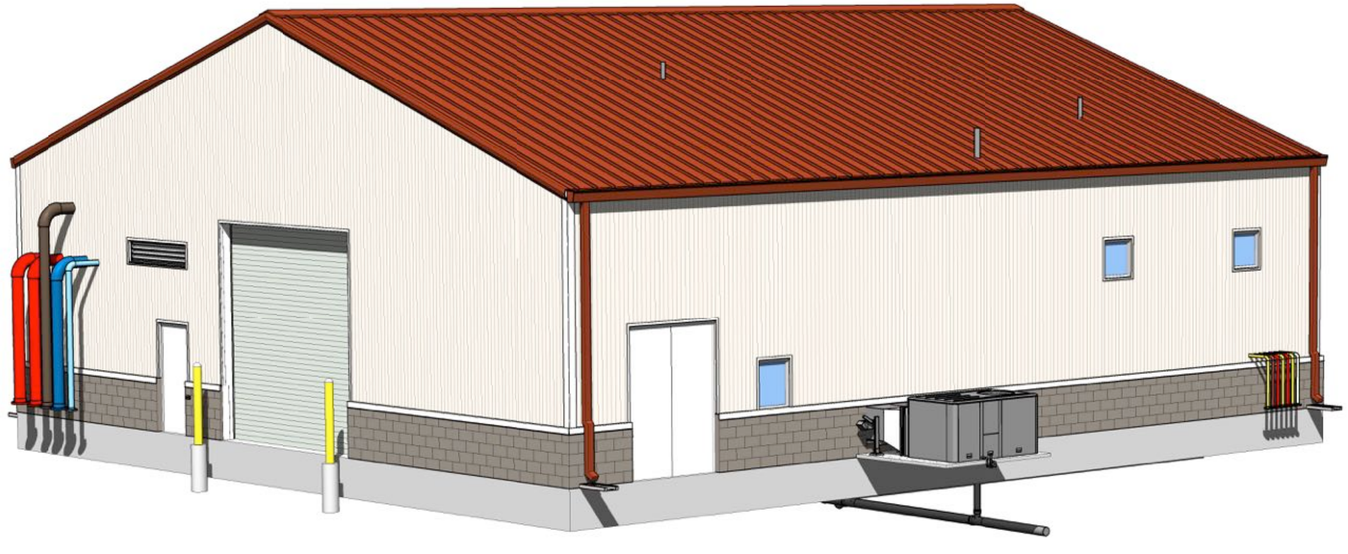

SOUTHEAST PERSPECTIVE

90% SUBMITTAL - NOT FOR CONTRUCTION

NO.	BY	CHK	APP	DATE	REVISIONS AND RECORD OF USE
B	BDF	EVB		7/30/2019	60% SUBMITTAL
A	BDF	EVB		3/5/2019	30% SUBMITTAL

LICENSED ARCHITECT
BRUCE DOUGLAS FRASER
C 9787
EXPIRES 12/31/21
STATE OF CALIFORNIA

FRASER SEIPLE ARCHITECTS

JOINT VENTURE

BLACK & VEATCH

FILANC

CITY OF MORRO BAY
MORRO BAY WATER
RECLAMATION FACILITY (WRF)

RO/UV BUILDING
ARCHITECTURAL
PERSPECTIVES

DESIGNED: BDF
DETAILED: ANH
CHECKED: -
APPROVED: -
DATE:

0 1/2 1
IF THIS BAR DOES NOT MEASURE 1" THEN DRAWING IS NOT TO FULL SCALE

PROJECT NO.
400530

50-A-001
SHEET
OF

PLOTTED: 3/3/2020 2:14:50 PM
D400530

STATE OF CALIFORNIA
ENVELOPE COMPONENT APPROACH
CEC-NRCC-ENV-01-E (Revised 01/16) — CALIFORNIA ENERGY COMMISSION

CERTIFICATE OF COMPLIANCE	NRCC-ENV-01-E
Envelope Component Approach	Page 1 of 4
Project Name: Morro Bay Water Reclamation Facility RO/UVBuilding - Non-Conditioned Space	Date Prepared: March 24, 2020

A. GENERAL INFORMATION

01	Project Location:	555 South Bay Boulevard	06	Compliance Method:	☑ Component ☐ Unconditioned (file Affidavit)
02	CA City and Zip Code:	Morro Bay 93442	07	Building Front Orientation:	South
03	Climate Zone:	5	08	Phase of Construction:	☑ New Construction ☐ Additions ☐ Alteration
04	Total Conditioned Floor Area:	0 S.F.	09	Building Occupancy:	☑ Nonresidential ☐ High Rise Residential ☐ Hotel/Motel Guest Room
05	Building Type:	☐ Schools (Public Schools) ☐ Relocatable Public School Building ☑ Conditioned Spaces ☐ Unconditioned Spaces ☐ Skylight Area for Large Enclosed Space > 5000 ft² (If checked, include the NRCC-ENV-04-E with submittal)			

STATE OF CALIFORNIA
ENVELOPE COMPONENT APPROACH
CEC-NRCC-ENV-01-E (Revised 01/16) — CALIFORNIA ENERGY COMMISSION

CERTIFICATE OF COMPLIANCE	NRCC-ENV-01-E
Envelope Component Approach	Page 4 of 4
Project Name: Morro Bay Water Reclamation Facility RO/UVBuilding - Non-Conditioned Space	Date Prepared: March 24, 2020

DOCUMENTATION AUTHOR'S DECLARATION STATEMENT

1. I certify that this Certificate of Compliance documentation is accurate and complete.

Documentation Author Name: Bruce Fraser	Documentation Author Signature: Bruce Fraser — Digitally signed by Bruce Fraser Date: 2020.03.24 08:16:02 -07'00'
Company: Fraser Seiple Architects	Signature Date: March 24, 2020
Address: 971 Osos Street	CEA/ HERS Certification Identification (if applicable):
City/State/Zip: San Luis Obispo, CA 93401	Phone: 805 544-6161

RESPONSIBLE PERSON'S DECLARATION STATEMENT

I certify the following under penalty of perjury, under the laws of the State of California:

1. The information provided on this Certificate of Compliance is true and correct.
2. I am eligible under Division 3 of the Business and Professions Code to accept responsibility for the building design or system design identified on this Certificate of Compliance (responsible designer).
3. The energy features and performance specifications, materials, components, and manufactured devices for the building design or system design identified on this Certificate of Compliance conform to the requirements of Title 24, Part 1 and Part 6 of the California Code of Regulations.
4. The building design features or system design features identified on this Certificate of Compliance are consistent with the information provided on other applicable compliance documents, worksheets, calculations, plans and specifications submitted to the enforcement agency for approval with this building permit application.
5. I will ensure that a completed signed copy of this Certificate of Compliance shall be made available with the building permit(s) issued for the building, and made available to the enforcement agency for all applicable inspections. I understand that a completed signed copy of this Certificate of Compliance is required to be included with the documentation the builder provides to the building owner at occupancy.

Responsible Designer Name: Bruce Fraser	Responsible Designer Signature: Bruce Fraser — Digitally signed by Bruce Fraser Date: 2020.03.24 09:56:25 -07'00'
Company: Fraser Seiple Architects	Date Signed: March 24, 2020
Address: 971 Osos Street	License: CA Architect #C9787
City/State/Zip: San Luis Obispo, CA 93401	Phone: 805 544-6161

COMPLIANCE COMMENTS, BUILDING 50 (RO/UV BUILDING)

Envelope components are not listed for Building 80 because it is classified as "Non-Conditioned Space." 3,393 square feet have no insulation or heating/cooling equipment. 623 square feet are insulated, thermostatically controlled, and heated/cooled only as required to keep electrical switchgear and related electrical equipment above 55 degrees F and below 90 degrees F to maintain equipment function critical to plant operations.

NO.	BY	CHK	APP	DATE	REVISIONS AND RECORD OF USE

LICENSED ARCHITECT — BRUCE DOUGLAS FRASER — C 9787 — STATE OF CALIFORNIA

FRASER SEIPLE ARCHITECTS

JOINT VENTURE

BLACK & VEATCH

FILANC

CITY OF MORRO BAY
MORRO BAY WATER
WATER RECLAMATION FACILITY (WRF)

ARCHITECTURAL
RO/UV BUILDING
ENERGY CODE COMPLIANCE

DESIGNED: BDF
DETAILED: SS
CHECKED:
APPROVED:
DATE:

0 1/2 1
IF THIS BAR DOES NOT MEASURE 1" THEN DRAWING IS NOT TO FULL SCALE

PROJECT NO.
400530

50-A-002
SHEET
OF

PLOTTED: 3/27/2020 5:01 PM

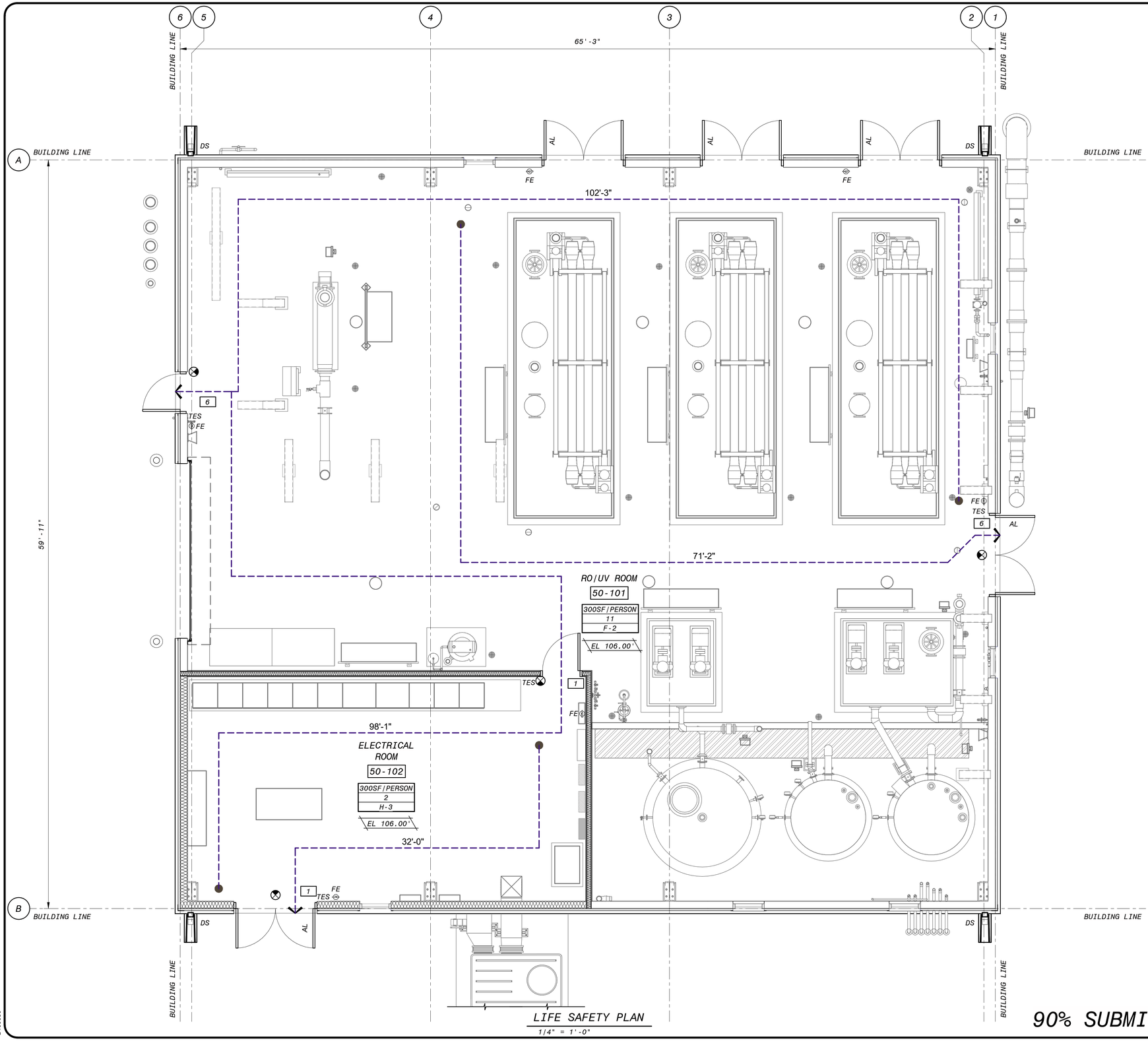

LIFE SAFETY PLAN
1/4" = 1'-0"

GENERAL SHEET NOTES

1. BUILDING CONSTRUCTION TYPE IS II-B OCCUPANCY IS F-2 (LOW HAZARD FACTORY INDUSTRIAL)
2. WALLS CEILINGS AND ROOFS NOT OTHERWISE IDENTIFIED ARE NOT FIRE RATED

SHEET KEYNOTES

LIFE SAFETY LEGEND

	FIRE EXTINGUISHER (FE)
X'-X"	PATH OF EGRESS TRAVEL
100SF/PERSON / 10	OCCUPANTS PER SF / OCCUPANT LOAD
1	CUMULATIVE OCCUPANT LOAD AT EXIT
	EXIT SYMBOL
TES	TACTILE EXIT SIGN
AL	ACTIVE LEAF
DS	DOWNSPOUT

BUILDING CODE ANALYSIS

RO/UV BUILDING	
APPLICABLE BUILDING CODES: 2016 CALIFORNIA BUILDING STANDARDS CODE	
OCCUPANCY	F-2, H-3
ACTUAL FLOOR AREA	4,016 SF TOTAL
ACTUAL HEIGHT	1 STORY (27.67 FT)
TYPE OF CONSTRUCTION	TYPE II-B
ALLOWABLE HEIGHT	2 STORIES (55 FT)
ALLOWABLE AREA	92,000 SF
DESIGN OCCUPANT LOAD	13 PERSONS
ADA ACCESSIBILITY	YES
OCCUPANCY SEPARATION	NOT REQUIRED
FIRE SPRINKLERS	NOT REQUIRED

4' 2' 0' 4' 8'
1/4" = 1'-0"

90% SUBMITTAL - NOT FOR CONTRUCTION

NO.	BY	CHK	APP
B	BDF	EVB	

60% SUBMITTAL
REVISIONS AND RECORD OF USE
DATE: 7/30/2019

LICENSED ARCHITECT
BRUCE DOUGLAS FRASER
C 9787
EXPIRES 12/31/21
STATE OF CALIFORNIA

FRASER SEMPLE ARCHITECTS
JOINT VENTURE
BLACK & VEATCH
FILANC

CITY OF MORRO BAY
MORRO BAY WATER RECLAMATION FACILITY (WRF)

RO/UV BUILDING
ARCHITECTURAL
LIFE SAFETY PLAN

DESIGNED: BDF
DETAILED: ANH
CHECKED: -
APPROVED: -
DATE:

0 1/2 1
IF THIS BAR DOES NOT MEASURE 1" THEN DRAWING IS NOT TO FULL SCALE

PROJECT NO.
400530

50-A-101
SHEET
OF

PLOTTED: 3/3/2020 2:14:55 PM
D400530

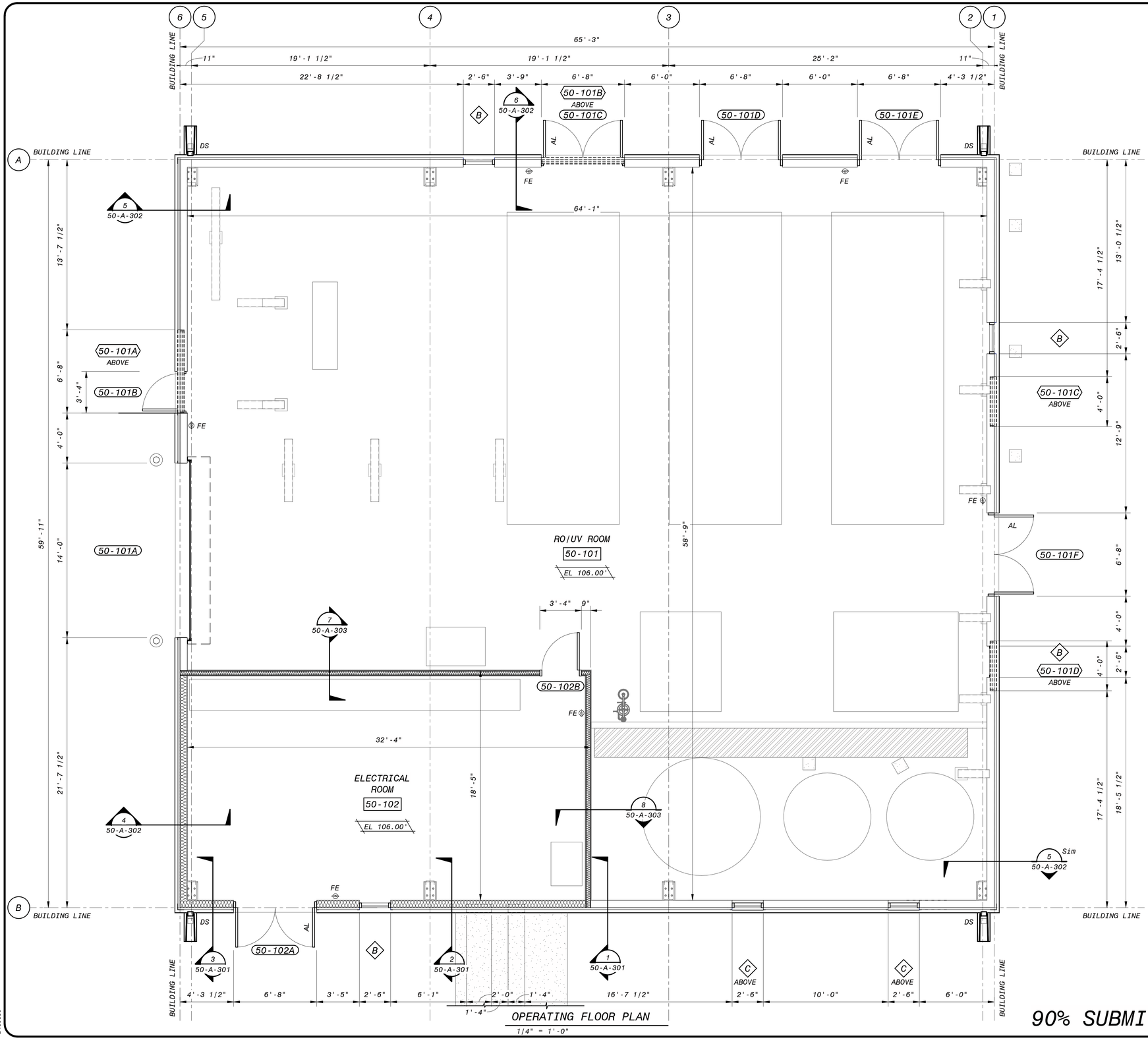

OPERATING FLOOR PLAN

1/4" = 1'-0"

90% SUBMITTAL - NOT FOR CONTRUCTION

GENERAL SHEET NOTES

SHEET KEYNOTES

LEGEND

X	ACCESSORY ITEM
101A	DOOR
H1	ACCESS HATCH
00	LABORATORY CABINET
101A	LOUVER
A	WALL or WALL PANEL TYPE
W	WINDOW
WS	WINDOW SYSTEM or FRAME TYPE
ROOM NAME 101	ROOM NAME & NUMBER

4' 2' 0' 4' 8'

1/4" = 1'-0"

NO.	BY	CHK	APP	DATE	REVISIONS AND RECORD OF USE
B	BDF	BDF	EVB	7/30/2019	60% SUBMITTAL
A	BDF	BDF	EVB	3/5/2019	30% SUBMITTAL

LICENSED ARCHITECT
BRUCE DOUGLAS FRASER
C 9787
EXPIRES 12/31/21
STATE OF CALIFORNIA

FRASER SEMPLE ARCHITECTS

JOINT VENTURE

BLACK & VEATCH

FILANC

CITY OF MORRO BAY
MORRO BAY WATER
RECLAMATION FACILITY (WRF)

RO/UV BUILDING
ARCHITECTURAL
OPERATING FLOOR PLAN

DESIGNED: BDF
DETAILED: ANH
CHECKED: -
APPROVED: -
DATE:

0 1/2 1

IF THIS BAR DOES NOT MEASURE 1" THEN DRAWING IS NOT TO FULL SCALE

PROJECT NO.
400530

50-A-102
SHEET
OF

PLOTTED: 3/3/2020 2:14:58 PM
D400530

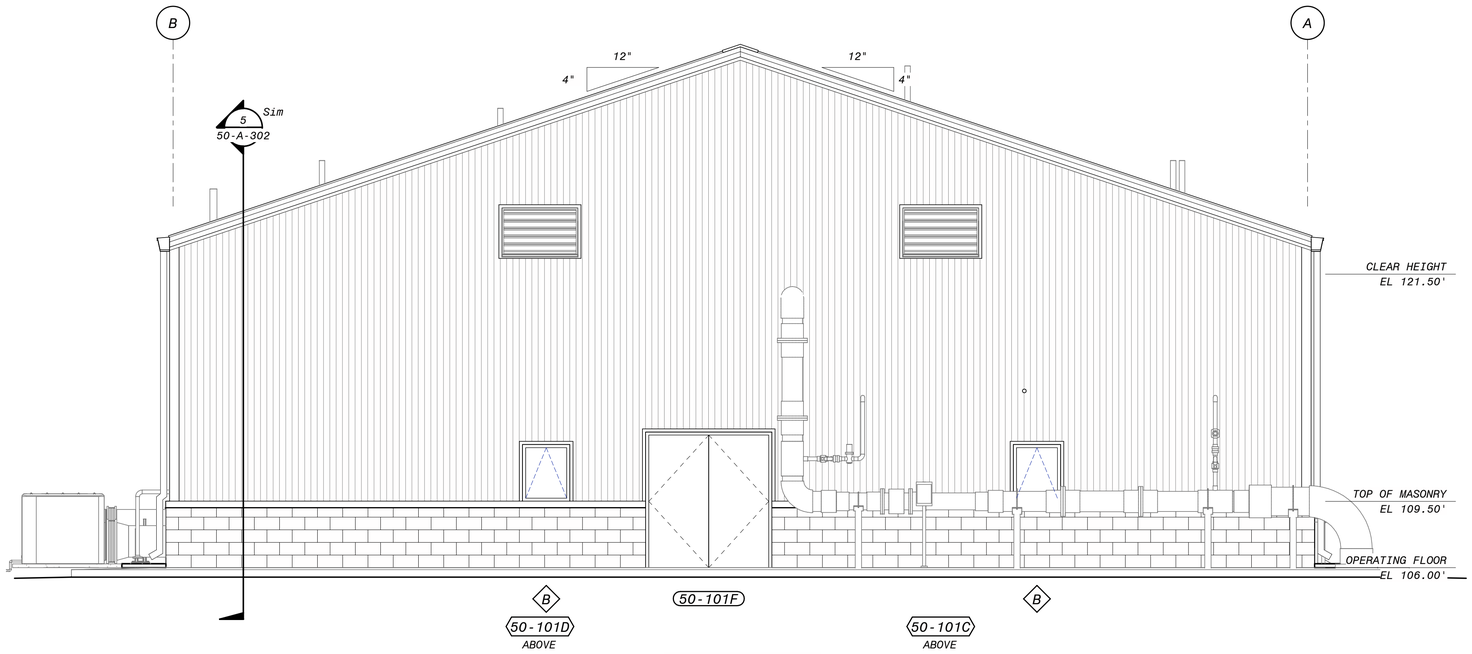

NORTH ELEVATION

1/4" = 1'-0"

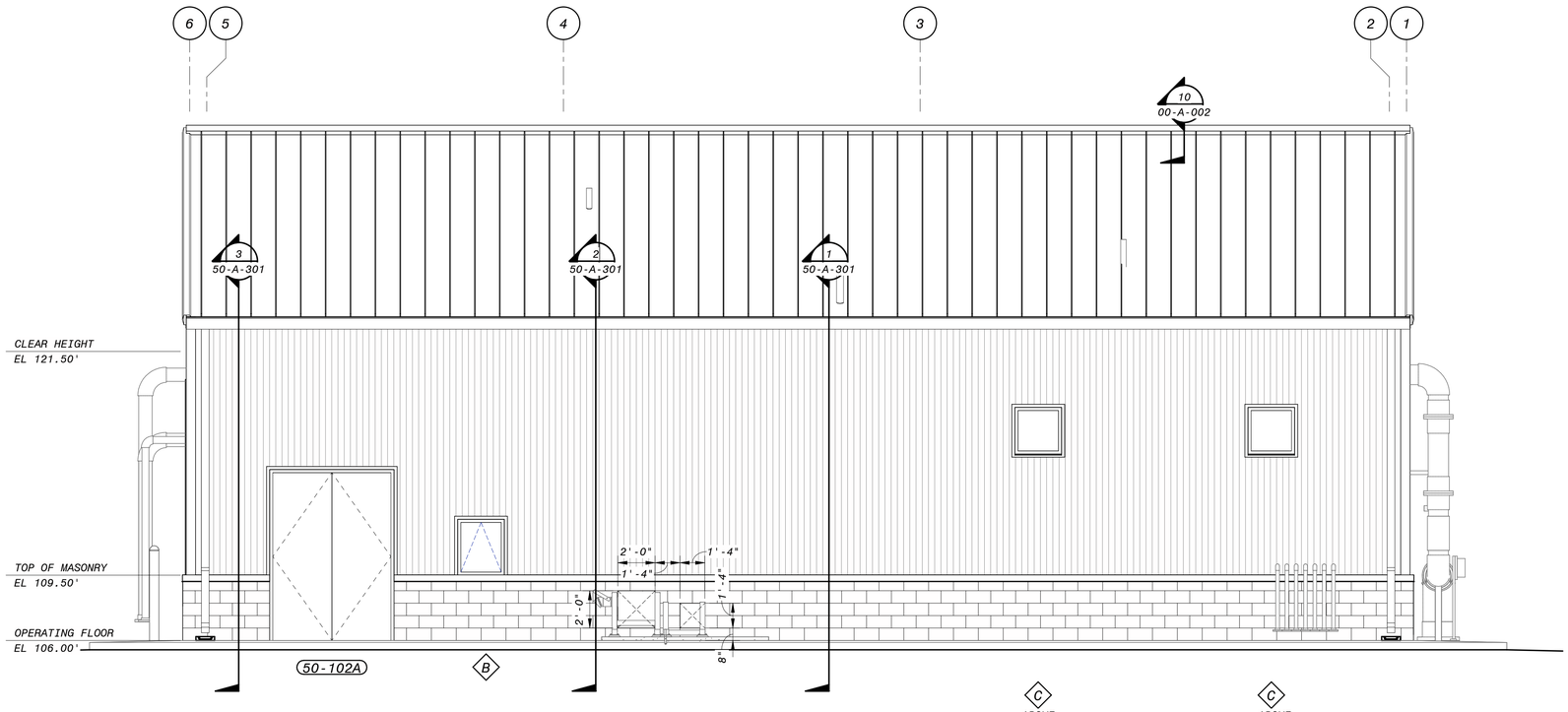

EAST ELEVATION

1/4" = 1'-0"

4' 2' 0' 4' 8'

1/4" = 1'-0"

90% SUBMITTAL - NOT FOR CONTRUCTION

GENERAL SHEET NOTES

SHEET KEYNOTES

NO.	BY	CHK	APP
B	BDF	EVB	

60% SUBMITTAL

REVISIONS AND RECORD OF USE

DATE: 7/30/2019

LICENSED ARCHITECT
BRUCE DOUGLAS FRASER
C 9787
EXPIRES 12/31/21
STATE OF CALIFORNIA

FRASER SEMPLE ARCHITECTS

JOINT VENTURE

BLACK & VEATCH

FILANC

CITY OF MORRO BAY
MORRO BAY WATER
RECLAMATION FACILITY (WRF)

RO/UV BUILDING
ARCHITECTURAL
BUILDING ELEVATIONS

DESIGNED: BDF
DETAILED: ANH
CHECKED: -
APPROVED: -
DATE:

0 1/2 1

IF THIS BAR DOES NOT MEASURE 1" THEN DRAWING IS NOT TO FULL SCALE

PROJECT NO.
400530

50-A-201
SHEET
OF

PLOTTED: 3/3/2020 2:15:00 PM
D400530

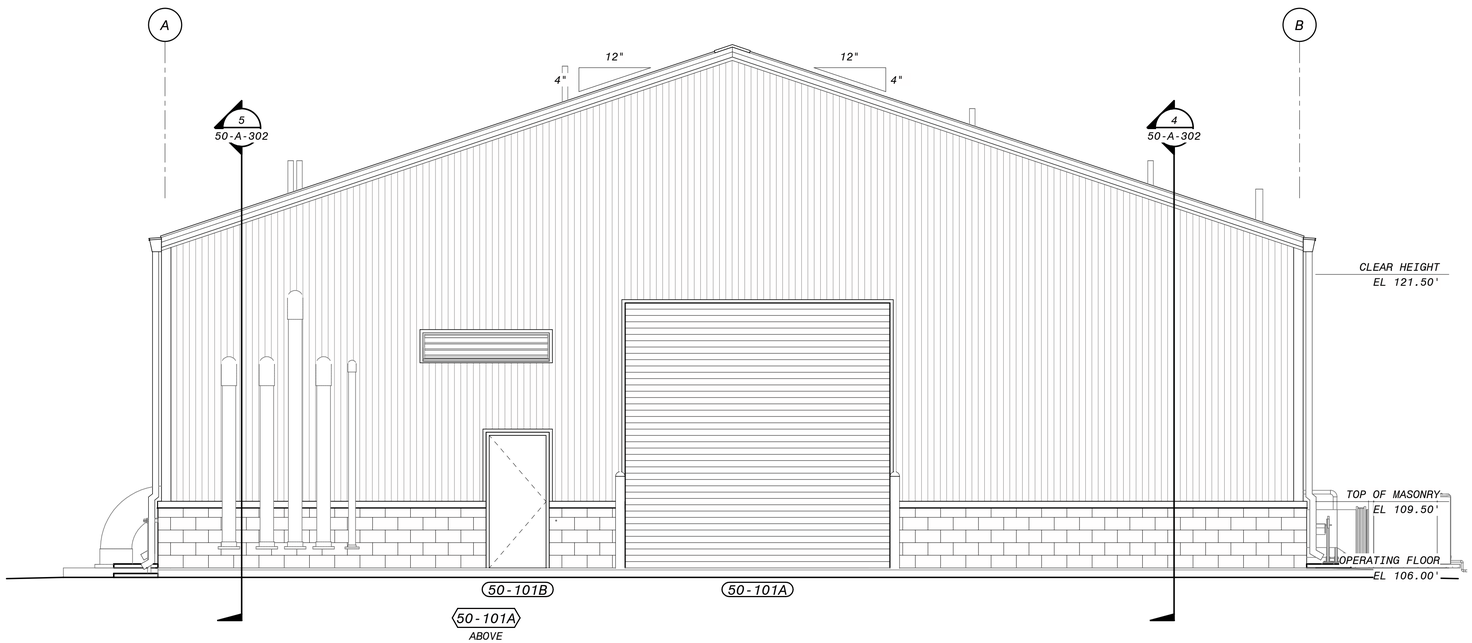

SOUTH ELEVATION

1/4" = 1'-0"

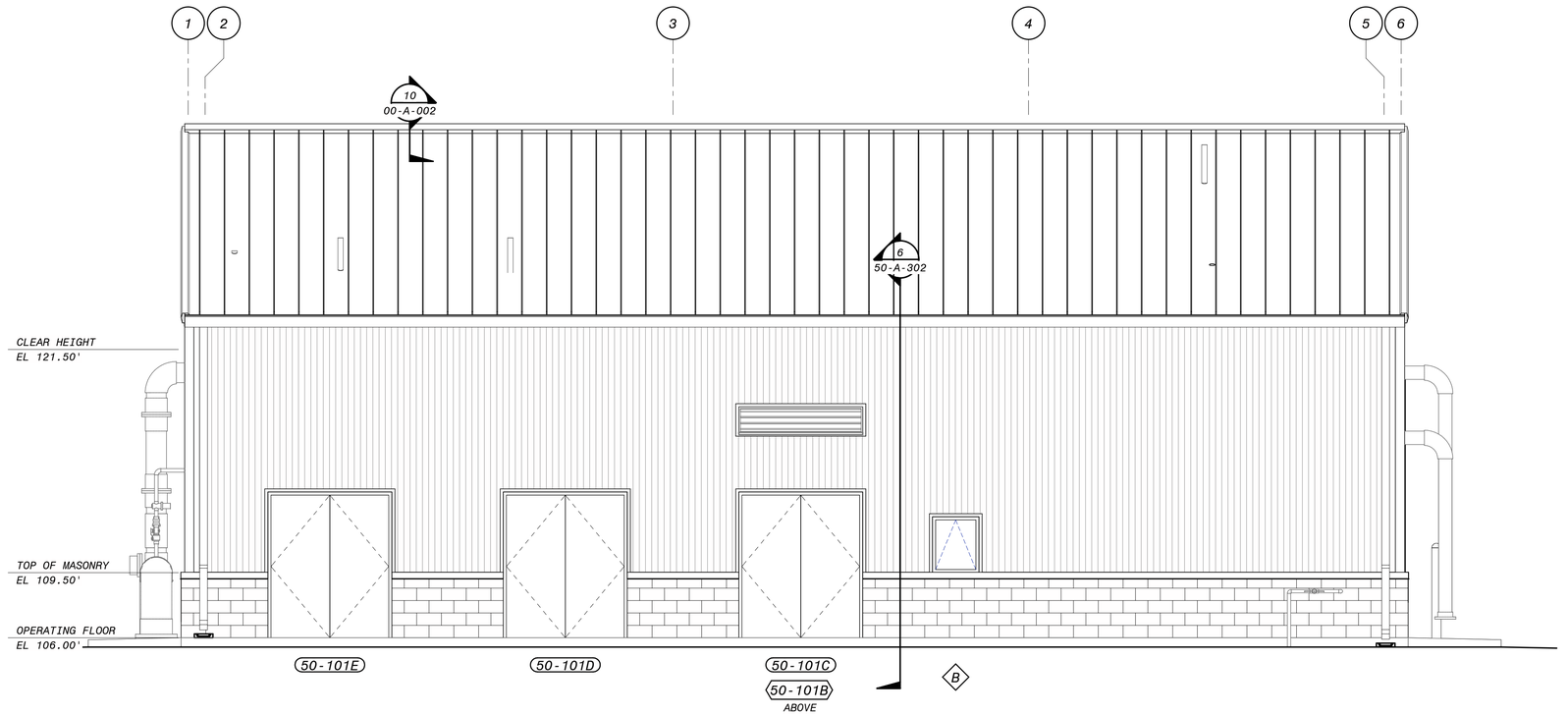

WEST ELEVATION

1/4" = 1'-0"

4' 2' 0' 4' 8'

1/4" = 1'-0"

90% SUBMITTAL - NOT FOR CONTRUCTION

GENERAL SHEET NOTES

SHEET KEYNOTES

NO.	BY	CHK	APP
B	BDF	EVB	

60% SUBMITTAL

REVISIONS AND RECORD OF USE

DATE: 7/30/2019

LICENSED ARCHITECT
BRUCE DOUGLAS FRASER
C 9787
EXPIRES 12/31/21
STATE OF CALIFORNIA

FRASER SEMPLE ARCHITECTS

JOINT VENTURE

BLACK & VEATCH

FILANC

CITY OF MORRO BAY
MORRO BAY WATER
RECLAMATION FACILITY (WRF)

RO/UV BUILDING
ARCHITECTURAL
BUILDING ELEVATIONS

DESIGNED: BDF
DETAILED: ANH
CHECKED: -
APPROVED: -
DATE:

0 1/2 1

IF THIS BAR DOES NOT MEASURE 1" THEN DRAWING IS NOT TO FULL SCALE

PROJECT NO.
400530

50-A-202
SHEET
OF

PLOTTED: 3/3/2020 2:15:04 PM
D400530

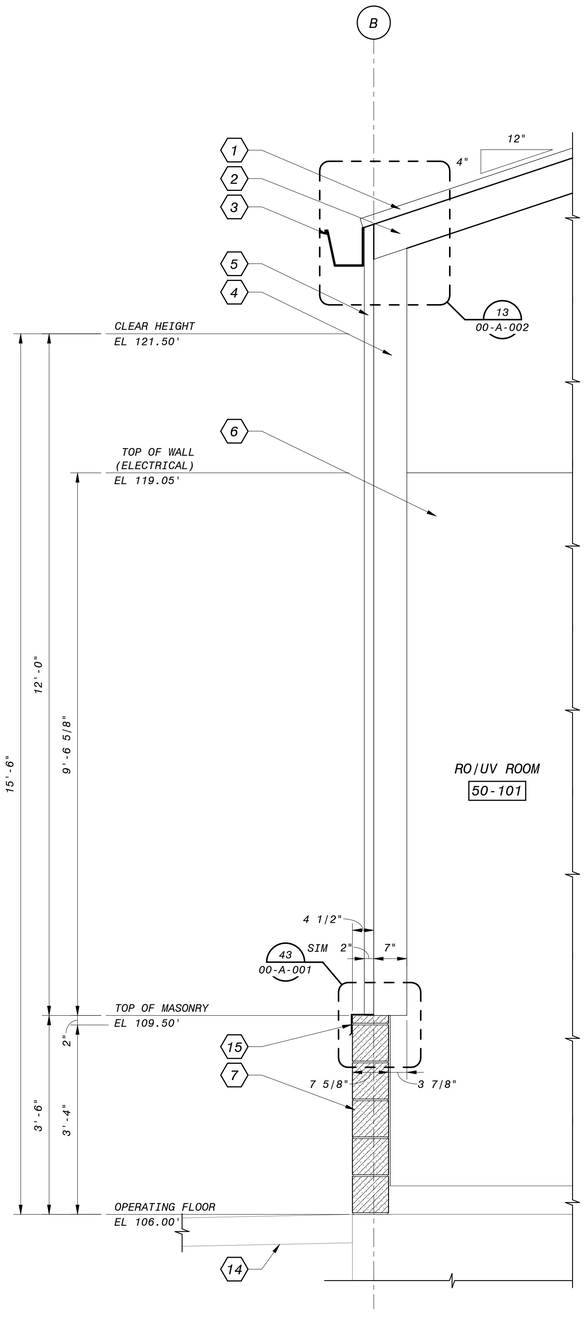

1 SECTION
50-A-102 3/4" = 1'-0"

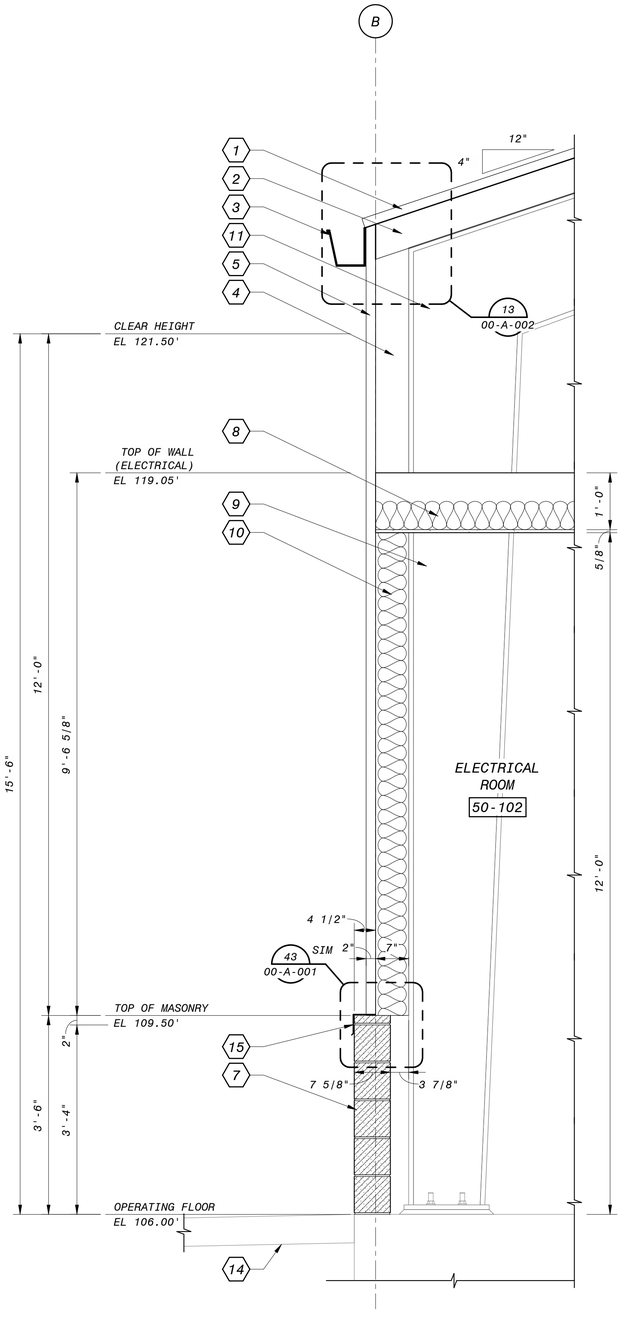

2 SECTION
50-A-102 3/4" = 1'-0"

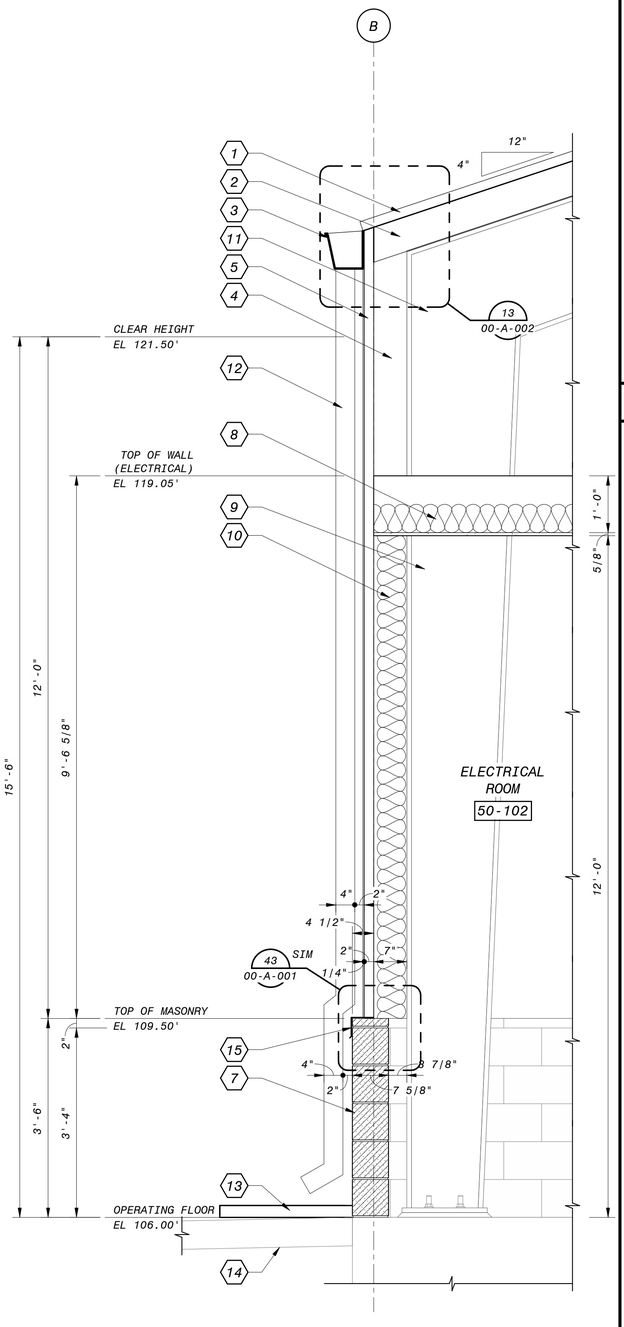

3 SECTION
50-A-102 3/4" = 1'-0"

GENERAL SHEET NOTES

1. FOR VERTICAL REINFORCING AND BOND BEAMS IN MASONRY DESIGN - SEE STRUCTURAL DRAWINGS
2. FOR HORIZONTAL JOINT REINFORCING - SEE SPECIFICATION SECTION 04200

SHEET KEYNOTES

1. METAL ROOFING PANELS
2. PURLIN FRAMING SPACE
3. PRE-FINISHED METAL FASCIA GUTTER
4. WALL GIRT FRAMING SPACE
5. PRE-FINISHED RIBBED METAL SIDING
6. ELECTRICAL ROOM WALL BEYOND
7. BURNISHED 8x8x16 CONCRETE BLOCK
8. CEILING - METAL C-JOISTS W/ BATT INSULATION W/ GYPSUM BOARD
9. METAL BOX HEADER TO SUPPORT CEILING FRAMING - SEE STRUCTURAL DRAWINGS
10. PINCH WALL INSULATION IN GIRT SPACE
11. PRE-ENGINEERED FRAME PER METAL BUILDING MANUFACTURER
12. PRE-FINISHED METAL DOWNSPOUT
13. PRECAST CONCRETE SPLASH BLOCK
14. PAVING
15. PAINTED METAL Z FLASHING

12" 6" 0' 1' 2' 3'
3/4" = 1'-0"

90% SUBMITTAL - NOT FOR CONTRUCTION

NO.	BY	CHK	APP
B	BDF	BDF	EVB

60% SUBMITTAL
REVISIONS AND RECORD OF USE
DATE 7/30/2019

LICENSED ARCHITECT
BRUCE DOUGLAS FRASER
C 9787
EXPIRES 12/31/21
STATE OF CALIFORNIA

FRASER SEIPLE ARCHITECTS
JOINT VENTURE
BLACK & VEATCH
FILANC

CITY OF MORRO BAY
MORRO BAY WATER
RECLAMATION FACILITY (WRF)

RO/UV BUILDING
ARCHITECTURAL
WALL SECTIONS

DESIGNED: BDF
DETAILED: ANH
CHECKED: -
APPROVED: -
DATE:

0 1/2 1
IF THIS BAR DOES NOT MEASURE 1" THEN DRAWING IS NOT TO FULL SCALE

PROJECT NO.
400530

50-A-301
SHEET
OF

PLOTTED: 3/3/2020 2:15:06 PM
D400530

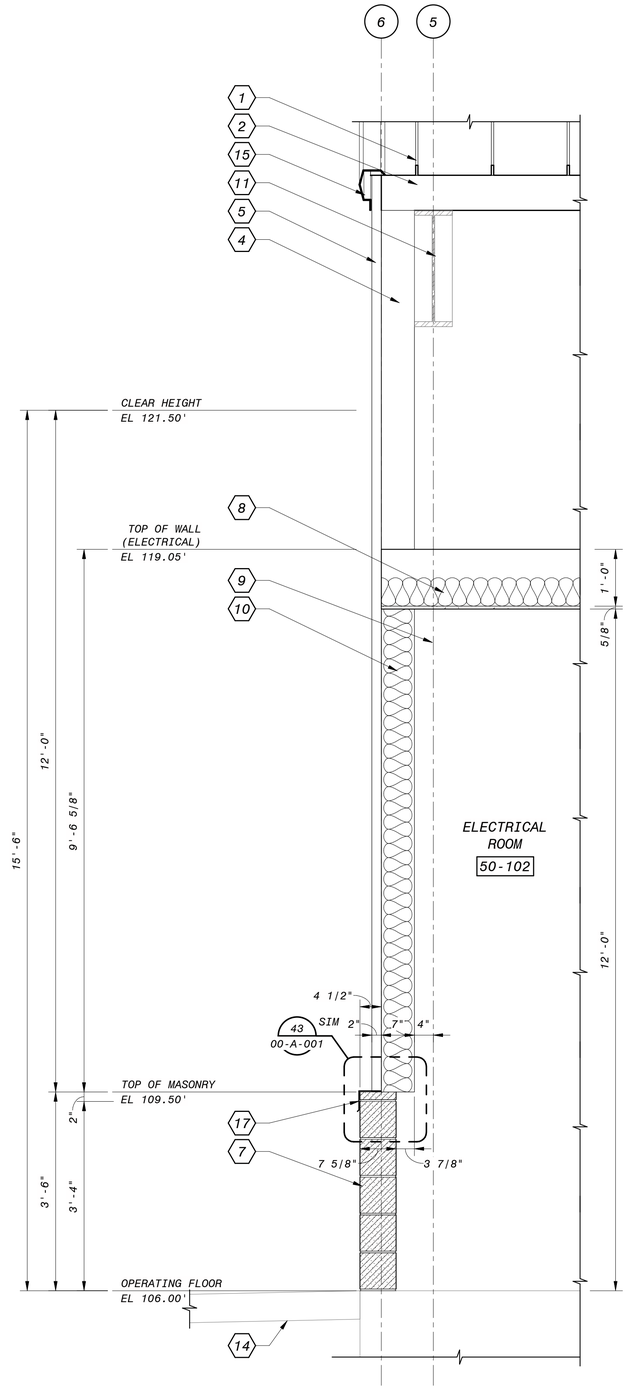

4 SECTION
50-A-102 3/4" = 1'-0"

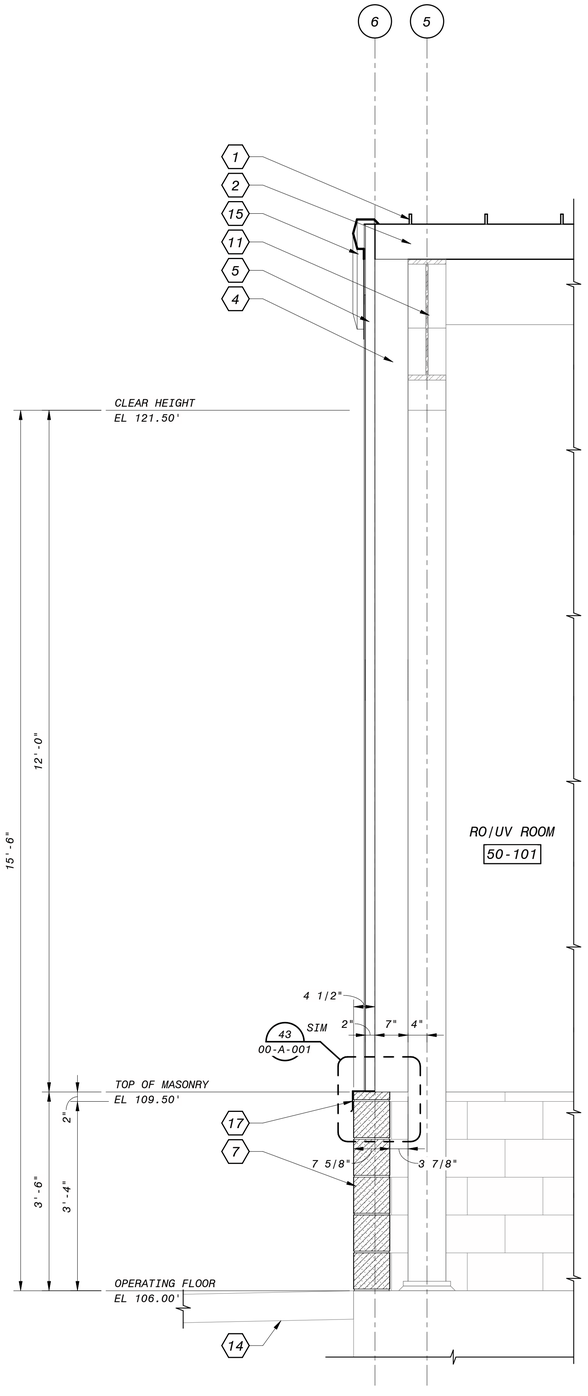

5 SECTION
50-A-102 3/4" = 1'-0"

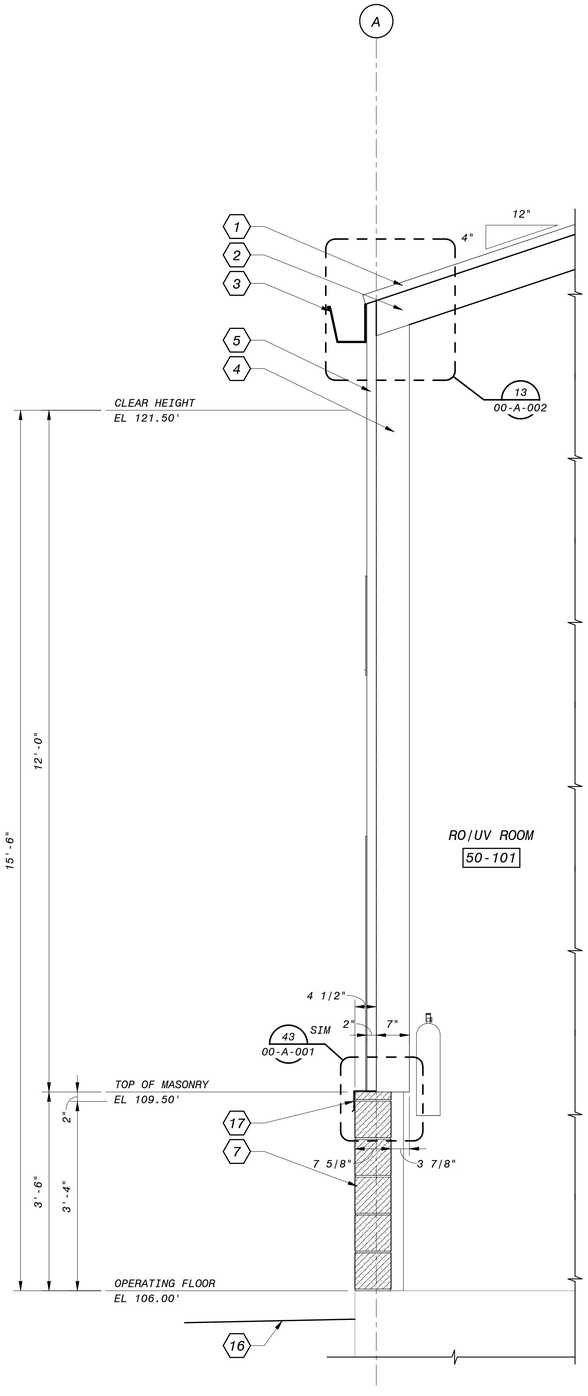

6 SECTION
50-A-102 3/4" = 1'-0"

12" 6" 0' 1' 2' 3'
3/4" = 1'-0"

90% SUBMITTAL - NOT FOR CONTRUCTION

GENERAL SHEET NOTES

1. FOR VERTICAL REINFORCING AND BOND BEAMS IN MASONRY DESIGN - SEE STRUCTURAL DRAWINGS
2. FOR HORIZONTAL JOINT REINFORCING - SEE SPECIFICATION SECTION 04200

SHEET KEYNOTES

1. METAL ROOFING PANELS
2. PURLIN FRAMING SPACE
3. PRE-FINISHED METAL FASCIA GUTTER
4. WALL GIRT FRAMING SPACE
5. PRE-FINISHED RIBBED METAL SIDING
6. ELECTRICAL ROOM WALL BEYOND
7. BURNISHED 8x8x16 CONCRETE BLOCK
8. CEILING - METAL C-JOISTS W/ BATT INSULATION W/ GYPSUM BOARD
9. METAL BOX HEADER TO SUPPORT CEILING FRAMING - SEE STRUCTURAL DRAWINGS
10. PINCH WALL INSULATION IN GIRT SPACE
11. PRE-ENGINEERED FRAME PER METAL BUILDING MANUFACTURER
12. PRE-FINISHED METAL DOWNSPOUT
13. PRECAST CONCRETE SPLASH BLOCK
14. PAVING
15. PRE-FINISHED METAL RAKE TRIM
16. FINISHED GRADE
17. PANTED METAL Z FLASHING

NO.	BY	CHK	APP	DATE	REVISIONS AND RECORD OF USE
B	BDF	BDF	EVB	7/30/2019	60% SUBMITTAL

LICENSED ARCHITECT
BRUCE DOUGLAS FRASER
C 9787
EXPIRES 12/31/21
STATE OF CALIFORNIA

FRASER SEMPLE ARCHITECTS
JOINT VENTURE
BLACK & VEATCH
FILANC

CITY OF MORRO BAY
MORRO BAY WATER
RECLAMATION FACILITY (WRF)

RO/UV BUILDING
ARCHITECTURAL
WALL SECTIONS

DESIGNED: BDF
DETAILED: ANH
CHECKED: -
APPROVED: -
DATE:

0 1/2 1
IF THIS BAR DOES NOT MEASURE 1" THEN DRAWING IS NOT TO FULL SCALE

PROJECT NO.
400530

50-A-302
SHEET
OF

PLOTTED: 3/3/2020 2:15:07 PM
D400530

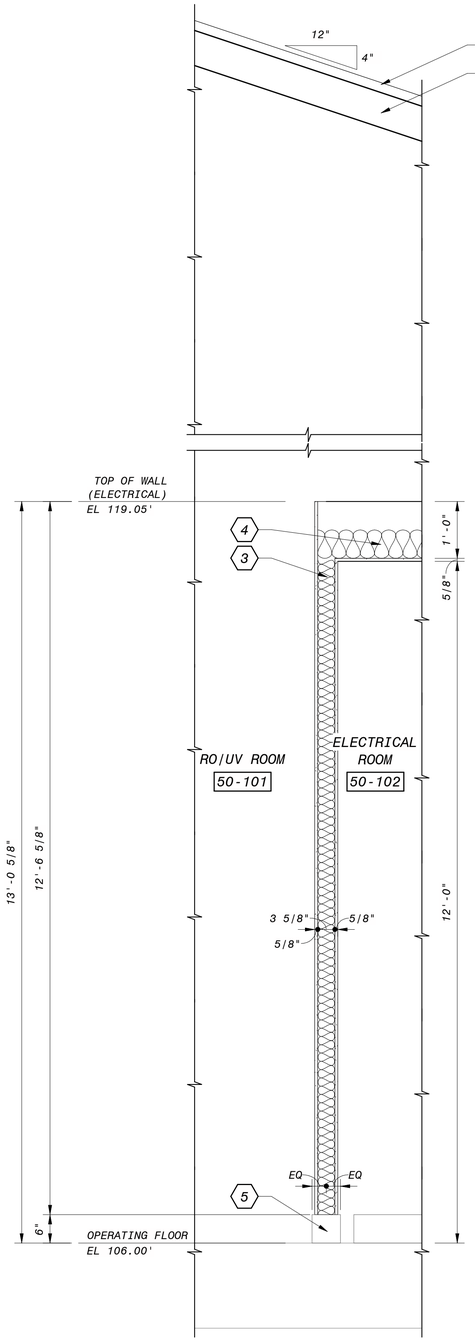

7 SECTION
50-A-102 3/4" = 1'-0"

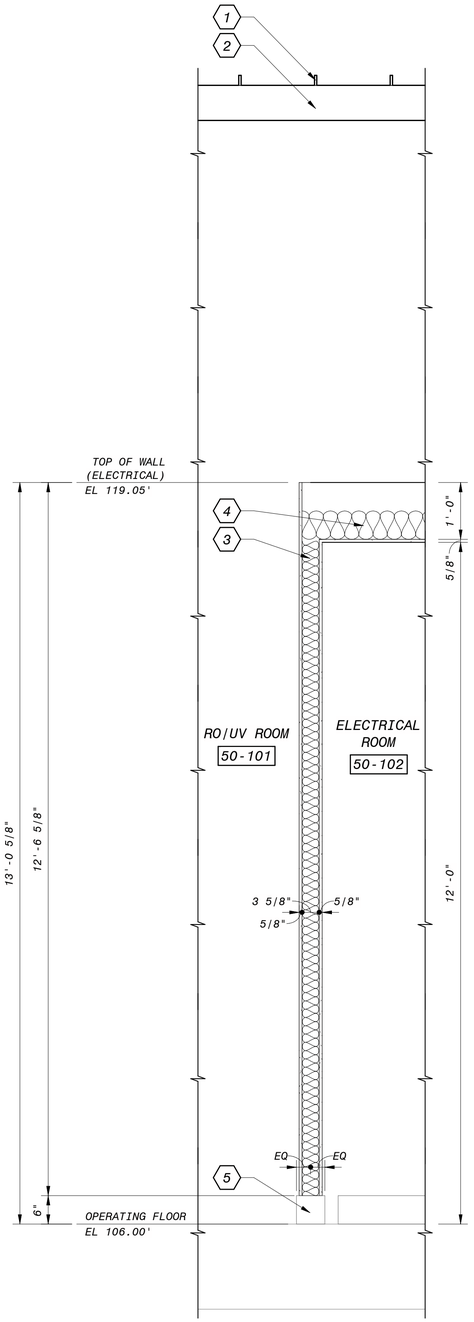

8 SECTION
50-A-102 3/4" = 1'-0"

GENERAL SHEET NOTES

1. FOR VERTICAL REINFORCING AND BOND BEAMS IN MASONRY DESIGN - SEE STRUCTURAL DRAWINGS
2. FOR HORIZONTAL JOINT REINFORCING - SEE SPECIFICATION SECTION 04200

SHEET KEYNOTES

1. METAL ROOFING PANELS
2. PURLIN FRAMING SPACE
3. 3 5/8" METAL STUD W/ BATT INSULATION W/ 5/8" GYPSUM BOARD EACH SIDE
4. CEILING - METAL C-JOISTS W/ BATT INSULATION W/ GYPSUM BOARD
5. 6"x6" CONCRETE CURB - SEE STRUCTURAL DRAWINGS

12" 6" 0' 1' 2' 3'
3/4" = 1'-0"

90% SUBMITTAL - NOT FOR CONTRUCTION

NO.	BY	CHK	APP
B	BDF	EVB	

60% SUBMITTAL
REVISIONS AND RECORD OF USE
7/30/2019
DATE

LICENSED ARCHITECT
BRUCE DOUGLAS FRASER
C 9787
EXPIRES 12/31/21
STATE OF CALIFORNIA

FRASER SEMPLE ARCHITECTS
BLACK & VEATCH
JOINT VENTURE
FILANC

CITY OF MORRO BAY
MORRO BAY WATER
RECLAMATION FACILITY (WRF)

RO/UV BUILDING
ARCHITECTURAL
WALL SECTIONS

DESIGNED: BDF
DETAILED: ANH
CHECKED: -
APPROVED: -
DATE:

0 1/2 1
IF THIS BAR DOES NOT MEASURE 1" THEN DRAWING IS NOT TO FULL SCALE

PROJECT NO.
400530

50-A-303
SHEET
OF

PLOTTED: 3/3/2020 2:15:08 PM
D400530

ROOM FINISH SCHEDULE

ROOM No.	ROOM NAME	FLOOR		WALLS												CEILING			REMARKS
				NORTH			EAST			SOUTH			WEST						
		MATERIAL	FINISH	MATERIAL	FINISH	BASE	MATERIAL	FINISH	BASE	MATERIAL	FINISH	BASE	MATERIAL	FINISH	BASE	MATERIAL	FINISH	HEIGHT	
RO/UV BUILDING																			
50-101	RO/UV ROOM	CO	FS	EXP/CB	FF	NO	EXP/CB/GWB	FF/PT	NO	EXP/CB/GWB	FF/PT	NO	EXP/CB	FF	NO	EXP	FF	17'-0"	
50-102	ELECTRICAL ROOM	CO	FS	GWB	PT	NO	EXP/CB	FF	NO	EXP/CB	FF	NO	GWB	PT	NO	GWB	PT	12'-0"	

DOOR SCHEDULE

DOOR ID	DOOR SIZE			DOOR							FRAME				
No. (D)		WIDTH	HEIGHT	MATERIAL	HEAD	JAMB	SILL	TYPE (D)	HARDWARE	RATING	MATERIAL	HEAD	JAMB	DEPTH	REMARKS
RO/UV BUILDING															
50-101A		14'-0"	14'-0"	RS	-	41 AND 42/00-A-001	-	-	-	-	RS			0"	
50-101B		3'-0"	7'-0"	FRP	-	-	-	A	-	-	FRP	2"	2"	5 3/4"	
50-101C	PR	3'-2"	7'-8"	FRP	30/00-A-001	31 AND 33/00-A-001	40/00-A-001	A/A	16	-	FRP	2"	2"	5 3/4"	
50-101D	PR	3'-2"	7'-8"	FRP	30/00-A-001	31 AND 33/00-A-001	40/00-A-001	A/A	16	-	FRP	2"	2"	5 3/4"	
50-101E	PR	3'-2"	7'-8"	FRP	30/00-A-001	31 AND 33/00-A-001	40/00-A-001	A/A	16	-	FRP	2"	2"	5 3/4"	
50-101F	PR	3'-2"	7'-0"	FRP	30/00-A-001	31 AND 33/00-A-001	40/00-A-001	A/A	16	-	FRP	2"	2"	5 3/4"	
50-102A	PR	3'-2"	9'-0"	FRP	30/00-A-001	31 AND 33/00-A-001	40/00-A-001	A/A	16	-	FRP	2"	2"	5 3/4"	
50-102B		3'-0"	7'-0"	FRP	-	-	-	B	9	-	FRP	2"	2"	5 3/4"	

WINDOW SCHEDULE

QTY	TYPE (W)	OPENING		WINDOW							COMMENTS
		WIDTH	HEIGHT	MATERIAL	HEAD	JAMB	MULLION	SILL	GLASS	TOP ELEV	
RO/UV BUILDING											
4	B	2'-6"	3'-0"	ALUM	50/00-A-001	51/00-A-001	-	52 SIM/00-A-001	DUAL PANE - CLEAR	112.50'	PROJECTED
2	C	2'-6"	2'-6"	ALUM	50/00-A-001	51/00-A-001	-	53/00-A-001	DUAL PANE - CLEAR	118.50'	FIXED

LOUVER SCHEDULE

LOUVER ID	OPENING		LOUVER					
No. (L)	WIDTH	HEIGHT	TYPE	HEAD	JAMB	SILL	TOP ELEV	REMARKS
RO/UV BUILDING								
50-101A	6'-8"	1'-5"	ALUM	30/00-A-002	31/00-A-002	33/00-A-002	118.42'	
50-101B	6'-8"	1'-5"	ALUM	30/00-A-002	31/00-A-002	33/00-A-002	118.42'	
50-101C	4'-0"	2'-6"	ALUM	30/00-A-002	31/00-A-002	33/00-A-002	125.00'	
50-101D	4'-0"	2'-6"	ALUM	30/00-A-002	31/00-A-002	33/00-A-002	125.00'	

SCHEDULE LEGEND

ALUM - ALUMINUM
CB - CONCRETE BLOCK
CO - CONCRETE
EXP - EXPOSED CONSTRUCTION
FF - FACTORY FINISH
FRP - FIBER REINFORCED PLASTIC
FS - FLOOR SEALER
GWB - GYPSUM WALLBOARD
NO - NONE
PT - PAINTED
RS - ROLLING STEEL

DOOR TYPES

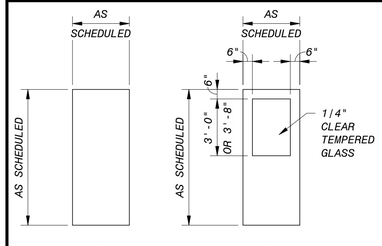

WINDOW TYPES

90% SUBMITTAL - NOT FOR CONTRUCTION

NO.	BY	CHK	APP	DATE

REVISIONS AND RECORD OF USE

LICENSED ARCHITECT
BRUCE DOUGLAS FRASER
C 9787
EXPIRES 12/31/21
STATE OF CALIFORNIA

FRASER SEMPLE ARCHITECTS
JOINT VENTURE
BLACK & VEATCH
FILANC

CITY OF MORRO BAY
MORRO BAY WATER
RECLAMATION FACILITY (WRF)

RO/UV BUILDING
ARCHITECTURAL
SCHEDULES

DESIGNED: BDF
DETAILED: ANH
CHECKED: -
APPROVED: -
DATE:

0 1/2 1
IF THIS BAR DOES NOT MEASURE 1" THEN DRAWING IS NOT TO FULL SCALE

PROJECT NO.
400530

50-A-601
SHEET
OF

PLOTTED: 3/3/2020 2:15:13 PM
D400530

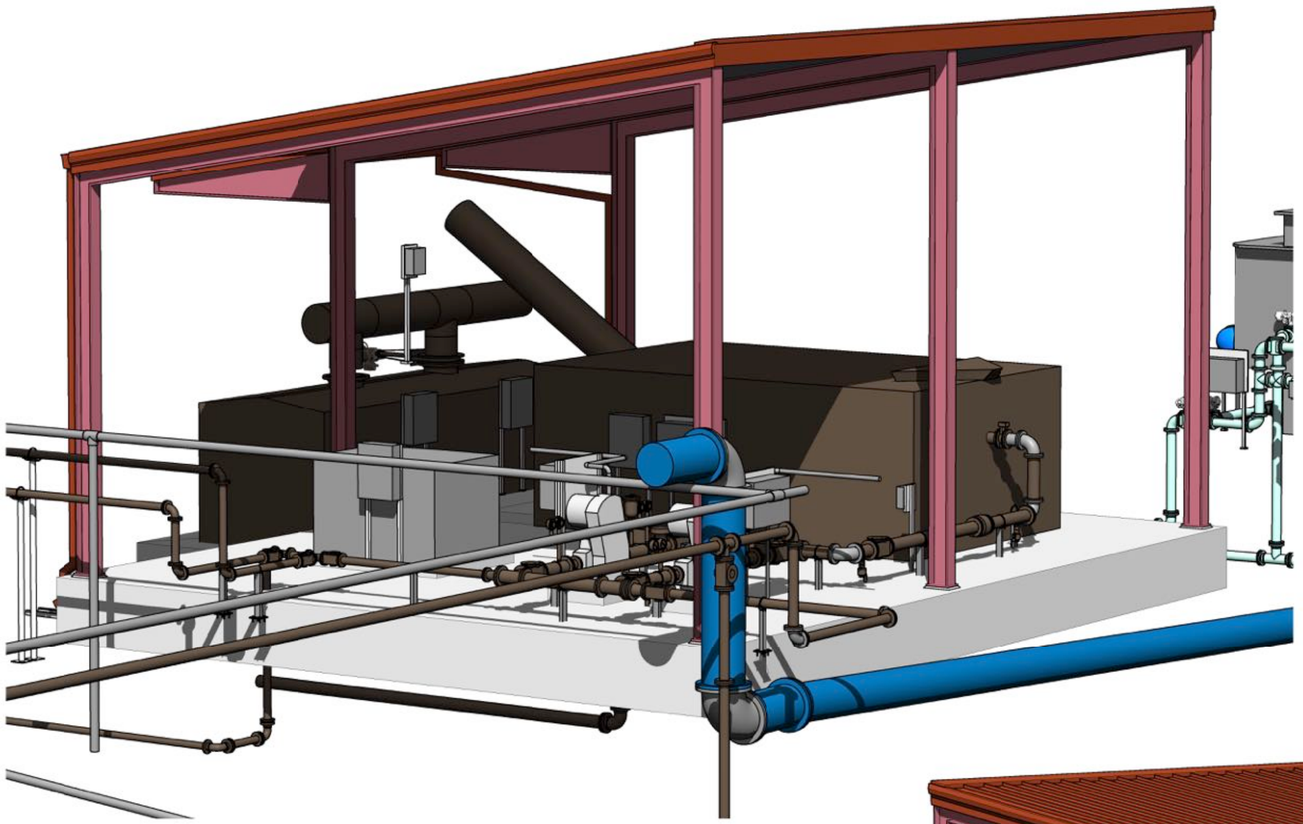

NORTHWEST PERSPECTIVE

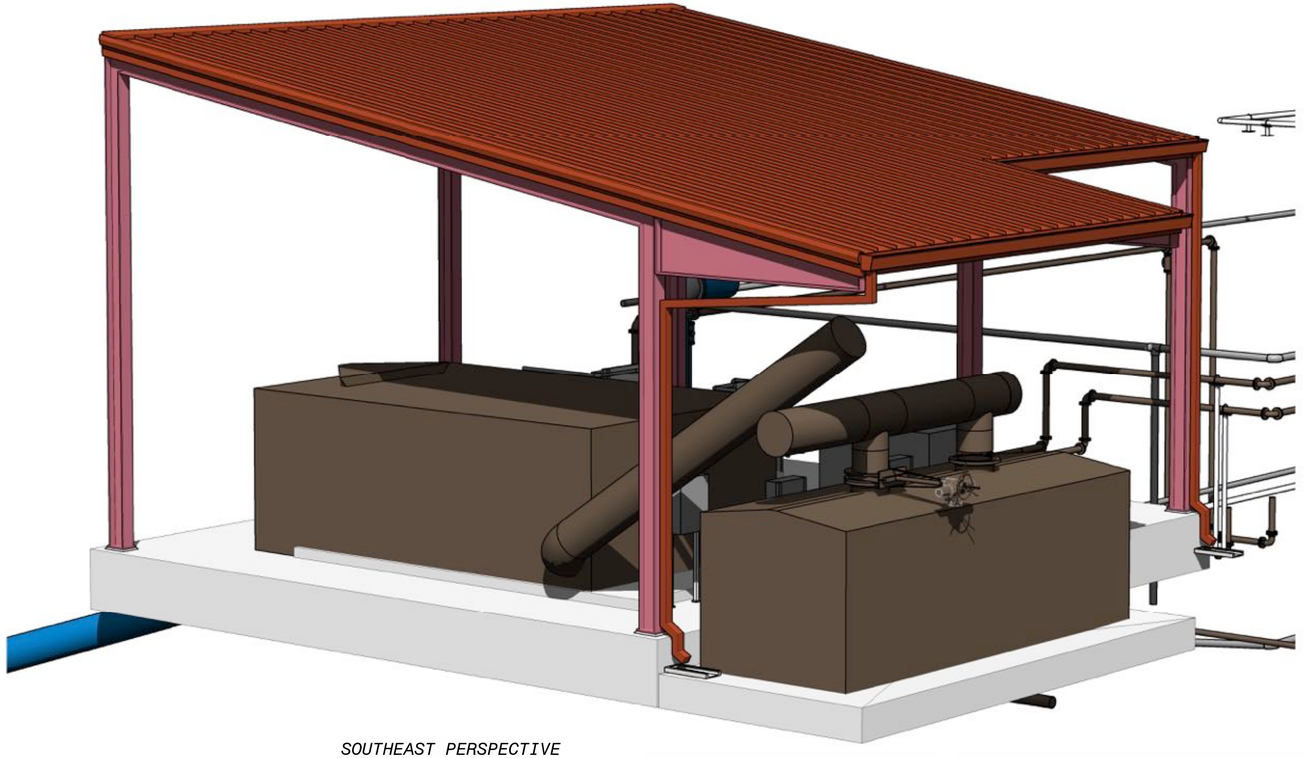

SOUTHEAST PERSPECTIVE

90% SUBMITTAL - NOT FOR CONSTRUCTION

NO.	BY	CHK	APP'D	DATE	REVISIONS AND RECORD OF USE

LICENSED ARCHITECT
BRUCE DOUGLAS FRASER
C 9787
STATE OF CALIFORNIA

FRASER SEIPLE ARCHITECTS

JOINT VENTURE

BLACK & VEATCH

FILANC

CITY OF MORRO BAY
MORRO BAY WATER
RECLAMATION FACILITY (WRF)

RESIDUALS AREA - DEWATERING FACILITY
ARCHITECTURAL
PERSPECTIVES

DESIGNED: BDF
DETAILED: ANH
CHECKED: -
APPROVED: -
DATE:

0 1/2 1
IF THIS BAR DOES NOT MEASURE 1" THEN DRAWING IS NOT TO FULL SCALE

PROJECT NO.
400530

72-A-001
SHEET
OF

PLOTTED: 2/12/2020 3:42:50 PM
D400530

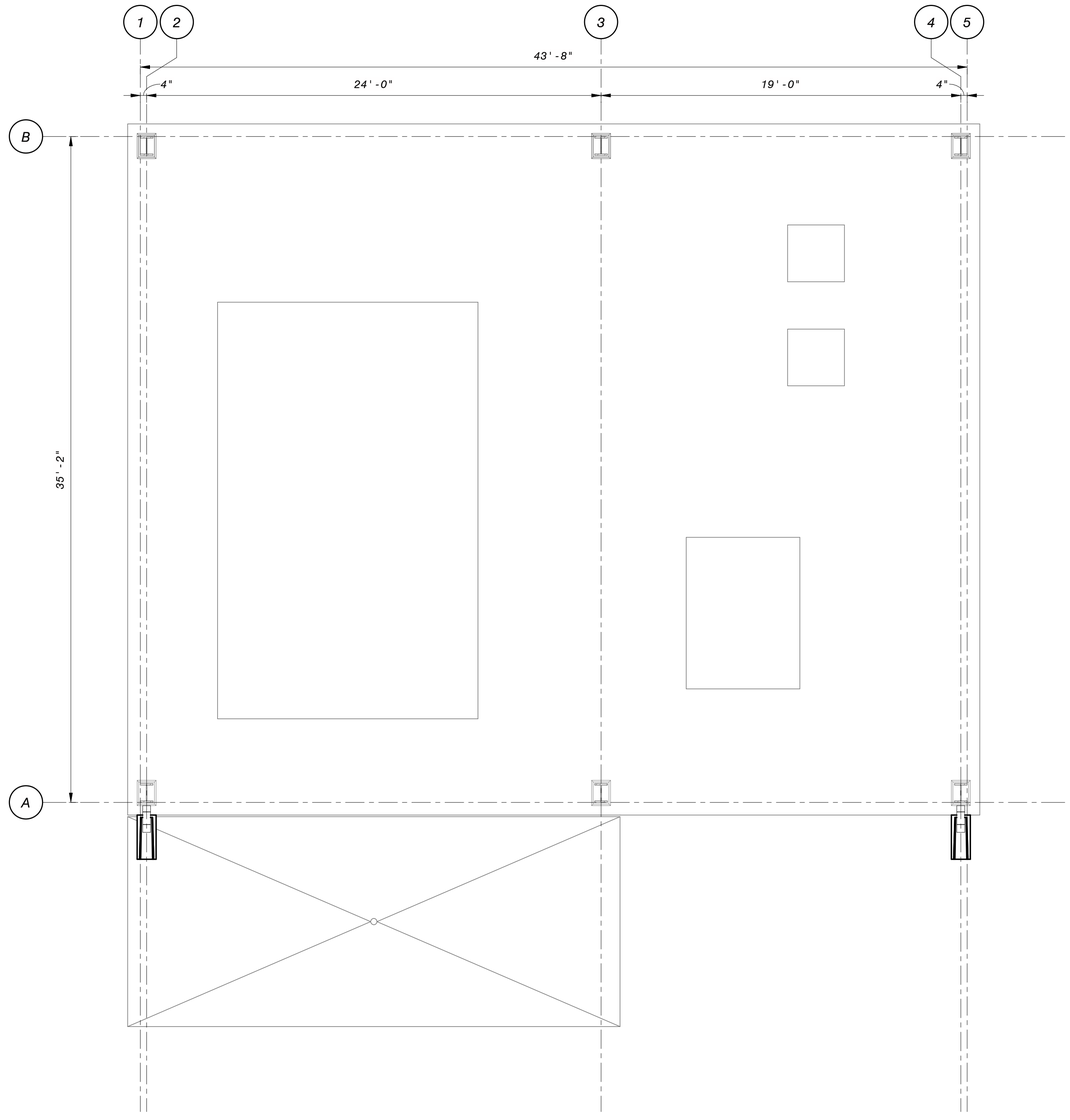

OPERATING FLOOR PLAN

1/4" = 1'-0"

GENERAL SHEET NOTES

SHEET KEYNOTES

4' 2' 0' 4' 8'

1/4" = 1'-0"

90% SUBMITTAL - NOT FOR CONSTRUCTION

NO.	BY	CHK	APP	DATE	REVISIONS AND RECORD OF USE

LICENSED ARCHITECT
BRUCE DOUGLAS FRASER
C 9787
EXPIRES 12/31/21
STATE OF CALIFORNIA

FRASER SEMPLE ARCHITECTS

JOINT VENTURE

BLACK & VEATCH

FILANC

CITY OF MORRO BAY
MORRO BAY WATER
RECLAMATION FACILITY (WRF)

RESIDUALS AREA - DEWATERING FACILITY
ARCHITECTURAL
OPERATING FLOOR PLAN

DESIGNED: BDF
DETAILED: ANH
CHECKED: -
APPROVED: -
DATE:

0 1/2 1

IF THIS BAR DOES NOT MEASURE 1" THEN DRAWING IS NOT TO FULL SCALE

PROJECT NO.
400530

72-A-101
SHEET
OF

PLOTTED: 2/12/2020 3:42:51 PM
D400530

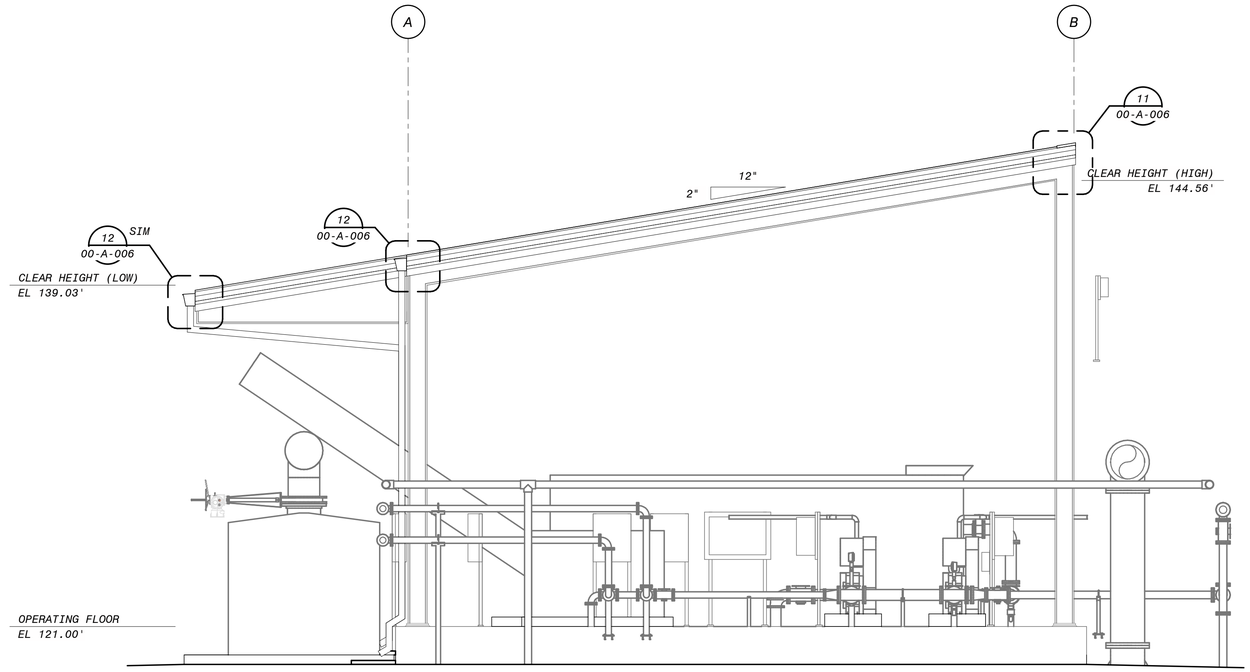

NORTH ELEVATION

1/4" = 1'-0"

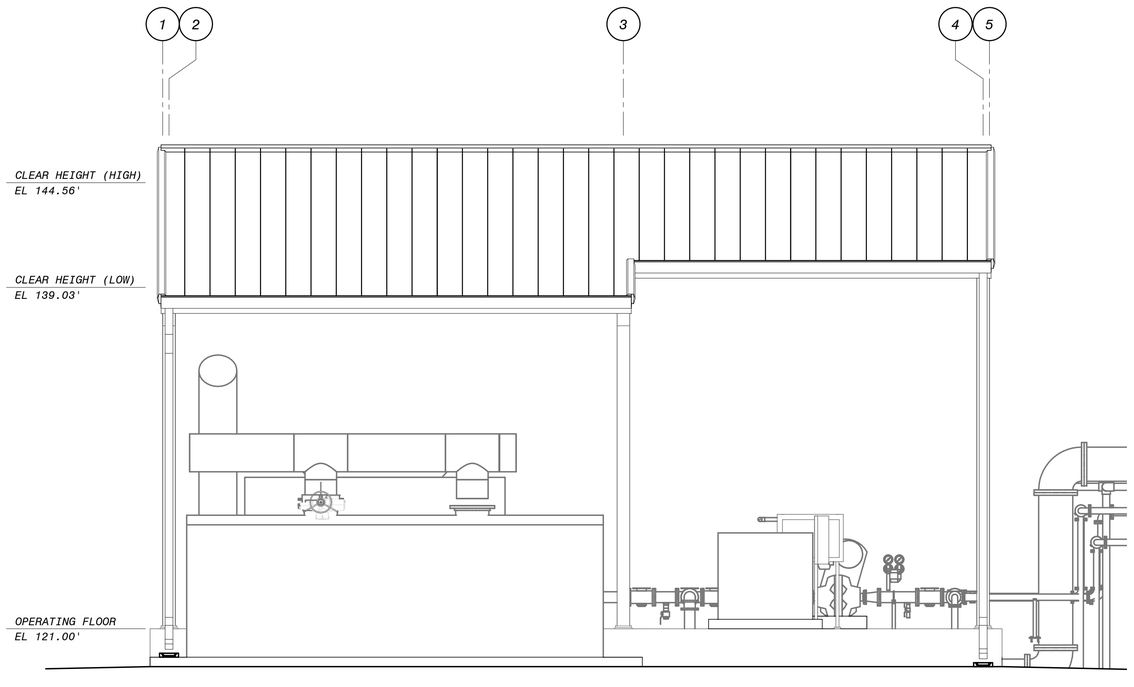

EAST ELEVATION

1/4" = 1'-0"

GENERAL SHEET NOTES

SHEET KEYNOTES

4' 2' 0' 4' 8'

1/4" = 1'-0"

90% SUBMITTAL - NOT FOR CONSTRUCTION

NO.	BY	CHK	APP'D	DATE	REVISIONS AND RECORD OF USE

LICENSED ARCHITECT
BRUCE DOUGLAS FRASER
C 9787
EXPIRES 12/31/21
STATE OF CALIFORNIA

FRASER SEMPLE ARCHITECTS

JOINT VENTURE

BLACK & VEATCH

FILANC

CITY OF MORRO BAY
MORRO BAY WATER
RECLAMATION FACILITY (WRF)

RESIDUALS AREA - DEWATERING FACILITY
ARCHITECTURAL
ELEVATIONS

DESIGNED: BDF
DETAILED: ANH
CHECKED: -
APPROVED: -
DATE:

0 1/2 1

IF THIS BAR DOES NOT MEASURE 1" THEN DRAWING IS NOT TO FULL SCALE

PROJECT NO.
400530

72-A-201
SHEET
OF

PLOTTED: 2/12/2020 3:40:12 PM
D400530

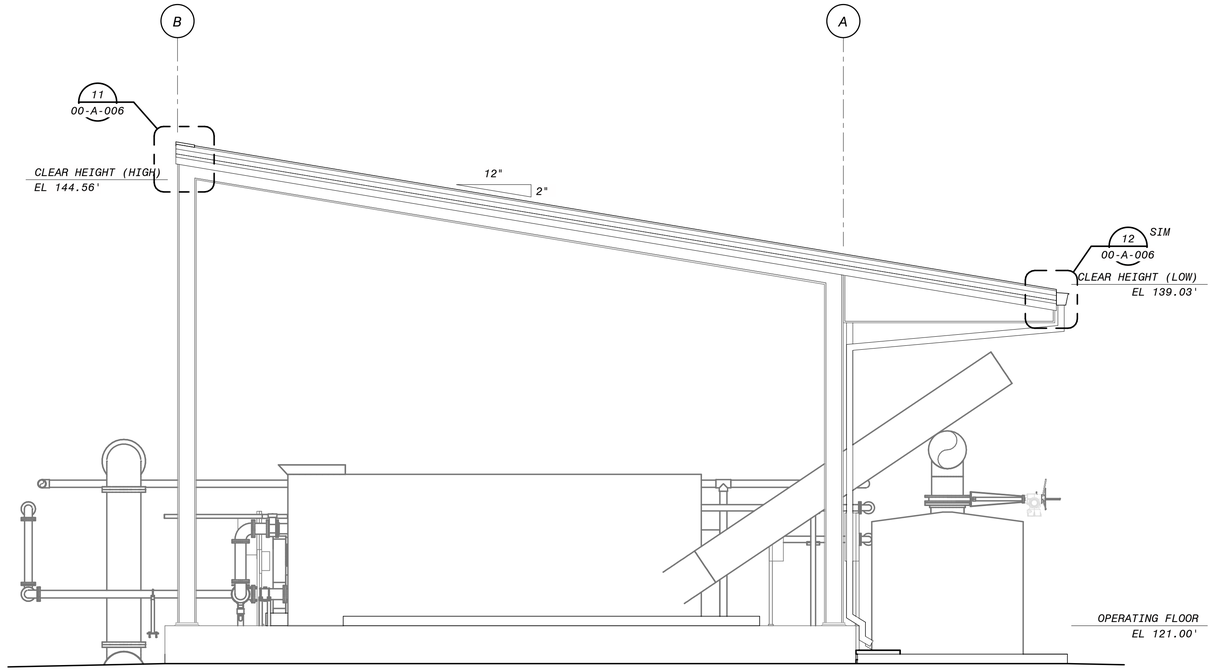

SOUTH ELEVATION

1/4" = 1'-0"

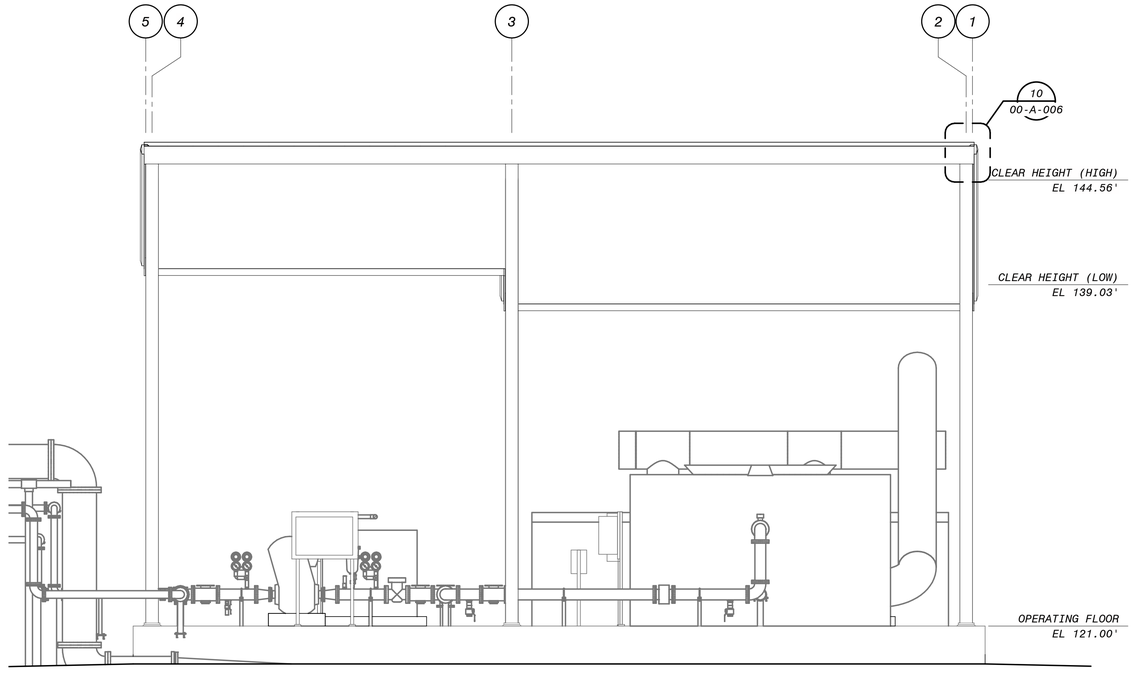

WEST ELEVATION

1/4" = 1'-0"

4' 2' 0' 4' 8'

1/4" = 1'-0"

90% SUBMITTAL - NOT FOR CONSTRUCTION

GENERAL SHEET NOTES

SHEET KEYNOTES

NO.	BY	CHK'APP'D	DATE	REVISIONS AND RECORD OF USE

LICENSED ARCHITECT
BRUCE DOUGLAS FRASER
C 9787
STATE OF CALIFORNIA

FRASER SEMPLE ARCHITECTS

JOINT VENTURE

BLACK & VEATCH

FILANC

CITY OF MORRO BAY
MORRO BAY WATER
RECLAMATION FACILITY (WRF)

RESIDUALS AREA - DEWATERING FACILITY
ARCHITECTURAL
ELEVATIONS

DESIGNED: BDF
DETAILED: ANH
CHECKED: -
APPROVED: -
DATE:

0 1/2 1
IF THIS BAR DOES NOT MEASURE 1" THEN DRAWING IS NOT TO FULL SCALE

PROJECT NO.
400530

72-A-202
SHEET
OF

PLOTTED: 2/12/2020 3:40:15 PM
D400530

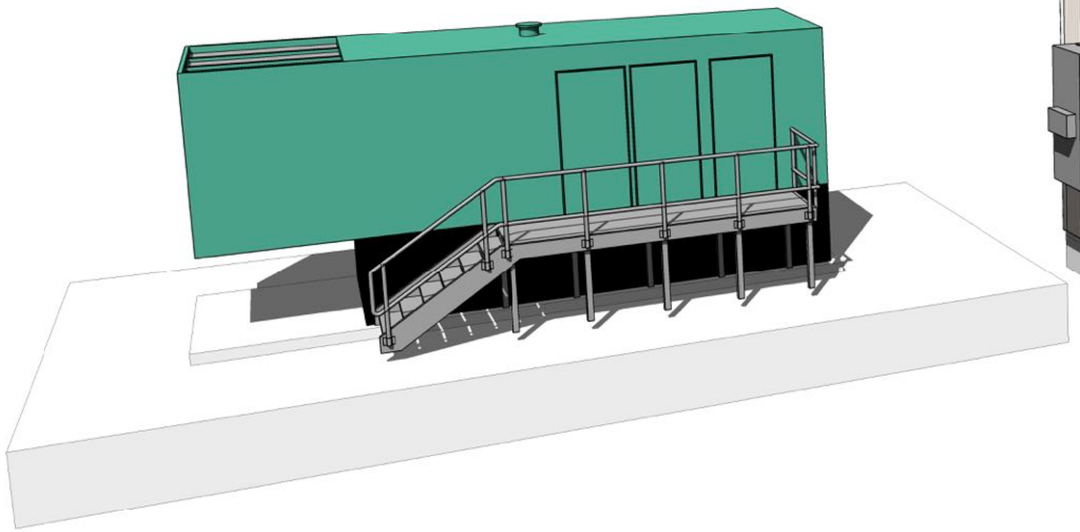

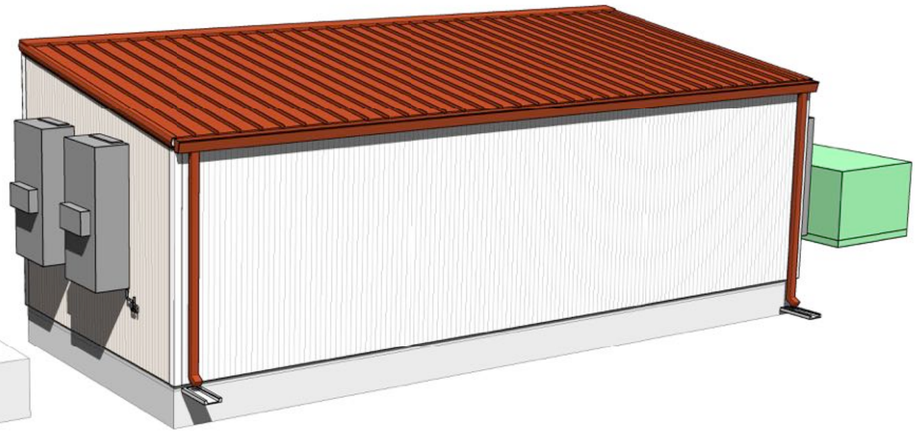

NORTHWEST PERSPECTIVE

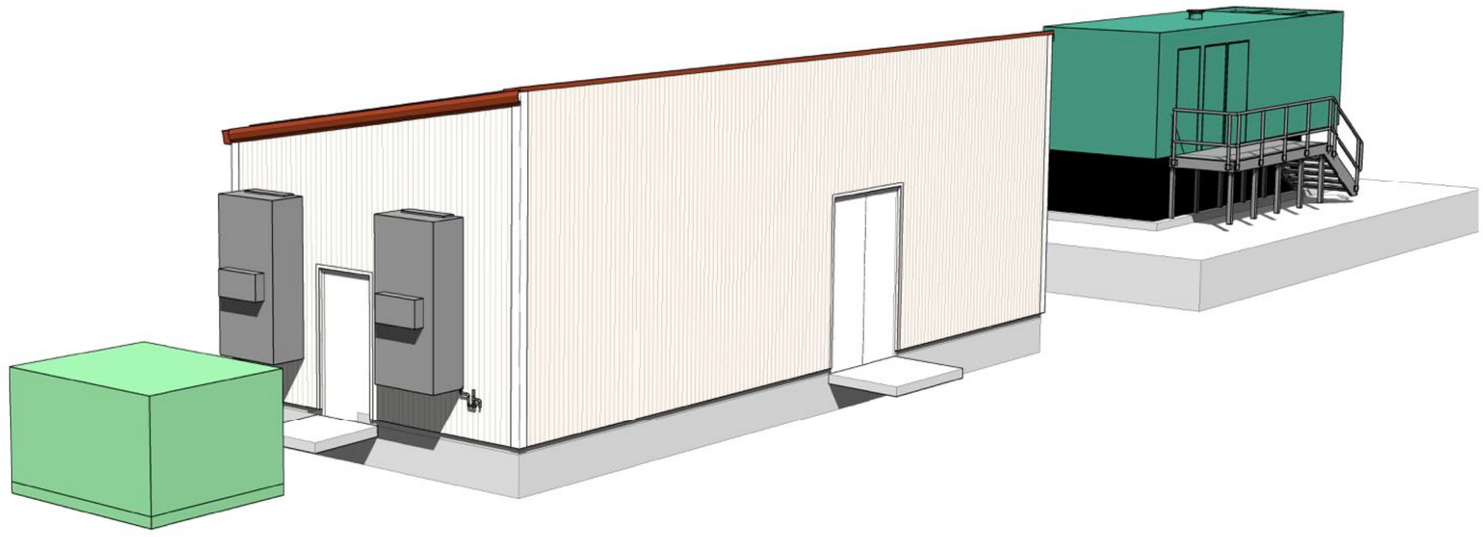

SOUTHEAST PERSPECTIVE

90% SUBMITTAL - NOT FOR CONSTRUCTION

NO.	BY	CHK	APP	DATE	REVISIONS AND RECORD OF USE

LICENSED ARCHITECT
BRUCE DOUGLAS FRASER
C 9787
STATE OF CALIFORNIA

FRASER SEIPLE ARCHITECTS

JOINT VENTURE

BLACK & VEATCH

FILANC

CITY OF MORRO BAY
MORRO BAY WATER
RECLAMATION FACILITY (WRF)

ELECTRICAL BUILDING
ARCHITECTURAL
PERSPECTIVES

DESIGNED: BDF
DETAILED: ANH
CHECKED: -
APPROVED: -
DATE:

0 1/2 1
IF THIS BAR DOES NOT MEASURE 1" THEN DRAWING IS NOT TO FULL SCALE

PROJECT NO.
400530

80-A-001
SHEET
OF

PLOTTED: 1/20/2020 2:39:01 PM
D400530

STATE OF CALIFORNIA
ENVELOPE COMPONENT APPROACH
CEC-NRCC-ENV-01-E (Revised 01/16) — CALIFORNIA ENERGY COMMISSION

CERTIFICATE OF COMPLIANCE	NRCC-ENV-01-E
Envelope Component Approach	Page 1 of 4
Project Name: Morro Bay Water Reclamation Facility RO/UVBuilding - Non-Conditioned Space	Date Prepared: March 24, 2020

A. GENERAL INFORMATION

01	Project Location:	555 South Bay Boulevard	06	Compliance Method:	☑ Component ☐ Unconditioned (file Affidavit)
02	CA City and Zip Code:	Morro Bay 93442	07	Building Front Orientation:	South
03	Climate Zone:	5	08	Phase of Construction:	☑ New Construction ☐ Additions ☐ Alteration
04	Total Conditioned Floor Area:	0 S.F.	09	Building Occupancy:	☑ Nonresidential ☐ High Rise Residential ☐ Hotel/Motel Guest Room
05	Building Type:	☐ Schools (Public Schools) ☐ Relocatable Public School Building ☑ Conditioned Spaces ☐ Unconditioned Spaces ☐ Skylight Area for Large Enclosed Space > 5000 ft² (If checked, include the NRCC-ENV-04-E with submittal)			

STATE OF CALIFORNIA
ENVELOPE COMPONENT APPROACH
CEC-NRCC-ENV-01-E (Revised 01/16) — CALIFORNIA ENERGY COMMISSION

CERTIFICATE OF COMPLIANCE	NRCC-ENV-01-E
Envelope Component Approach	Page 4 of 4
Project Name: Morro Bay Water Reclamation Facility RO/UVBuilding - Non-Conditioned Space	Date Prepared: March 24, 2020

DOCUMENTATION AUTHOR'S DECLARATION STATEMENT

1. I certify that this Certificate of Compliance documentation is accurate and complete.

Documentation Author Name: Bruce Fraser	Documentation Author Signature: Bruce Fraser — Digitally signed by Bruce Fraser Date: 2020.03.24 08:16:02 -07'00'
Company: Fraser Seiple Architects	Signature Date: March 24, 2020
Address: 971 Osos Street	CEA/ HERS Certification Identification (if applicable):
City/State/Zip: San Luis Obispo, CA 93401	Phone: 805 544-6161

RESPONSIBLE PERSON'S DECLARATION STATEMENT

I certify the following under penalty of perjury, under the laws of the State of California:

1. The information provided on this Certificate of Compliance is true and correct.
2. I am eligible under Division 3 of the Business and Professions Code to accept responsibility for the building design or system design identified on this Certificate of Compliance (responsible designer).
3. The energy features and performance specifications, materials, components, and manufactured devices for the building design or system design identified on this Certificate of Compliance conform to the requirements of Title 24, Part 1 and Part 6 of the California Code of Regulations.
4. The building design features or system design features identified on this Certificate of Compliance are consistent with the information provided on other applicable compliance documents, worksheets, calculations, plans and specifications submitted to the enforcement agency for approval with this building permit application.
5. I will ensure that a completed signed copy of this Certificate of Compliance shall be made available with the building permit(s) issued for the building, and made available to the enforcement agency for all applicable inspections. I understand that a completed signed copy of this Certificate of Compliance is required to be included with the documentation the builder provides to the building owner at occupancy.

Responsible Designer Name: Bruce Fraser	Responsible Designer Signature: Bruce Fraser — Digitally signed by Bruce Fraser Date: 2020.03.24 09:56:25 -07'00'
Company: Fraser Seiple Architects	Date Signed: March 24, 2020
Address: 971 Osos Street	License: CA Architect #C9787
City/State/Zip: San Luis Obispo, CA 93401	Phone: 805 544-6161

COMPLIANCE COMMENTS, BUILDING 80 (ELECTRICAL BUILDING)

Envelope components are not listed for Building 80 because the floor area is below 1,000 square feet, making the building exempt per CCR Title 24, Part 1, Section 10-103, as follows:

> EXCEPTION to Section 10-103(a): Enforcing agencies may exempt nonresidential buildings that have no more than 1,000 square feet of conditioned floor area in the entire building and an occupant load of 49 persons or less from the documentation requirements of Section 10-103(a), provided a statement of compliance with Part 6 is submitted and signed by a licensed engineer or the licensed architect with chief responsibility for the design.

Additionally, Building 80 is classified as "Non-Conditioned Space." The building is insulated, thermostatically controlled, and heated/cooled only as required to keep electrical switchgear and related electrical equipment above 55 degrees F and below 90 degrees F to maintain equipment function critical to plant operations.

NO.	BY	CHK	APP	DATE	REVISIONS AND RECORD OF USE

LICENSED ARCHITECT — BRUCE DOUGLAS FRASER — C 9787 — EXPIRES 12-31-20 — STATE OF CALIFORNIA

FRASER SEIPLE ARCHITECTS

JOINT VENTURE

BLACK & VEATCH

FILANC

CITY OF MORRO BAY
MORRO BAY WATER
WATER RECLAMATION FACILITY (WRF)

ARCHITECTURAL
ELECTRICAL BUILDING
ENERGY CODE COMPLIANCE

DESIGNED: BDF
DETAILED: SS
CHECKED:
APPROVED:
DATE:

0 1/2 1
IF THIS BAR DOES NOT MEASURE 1" THEN DRAWING IS NOT TO FULL SCALE

PROJECT NO.
400530

80-A-002
SHEET
OF

PLOTTED: 3/27/2020 5:01 PM

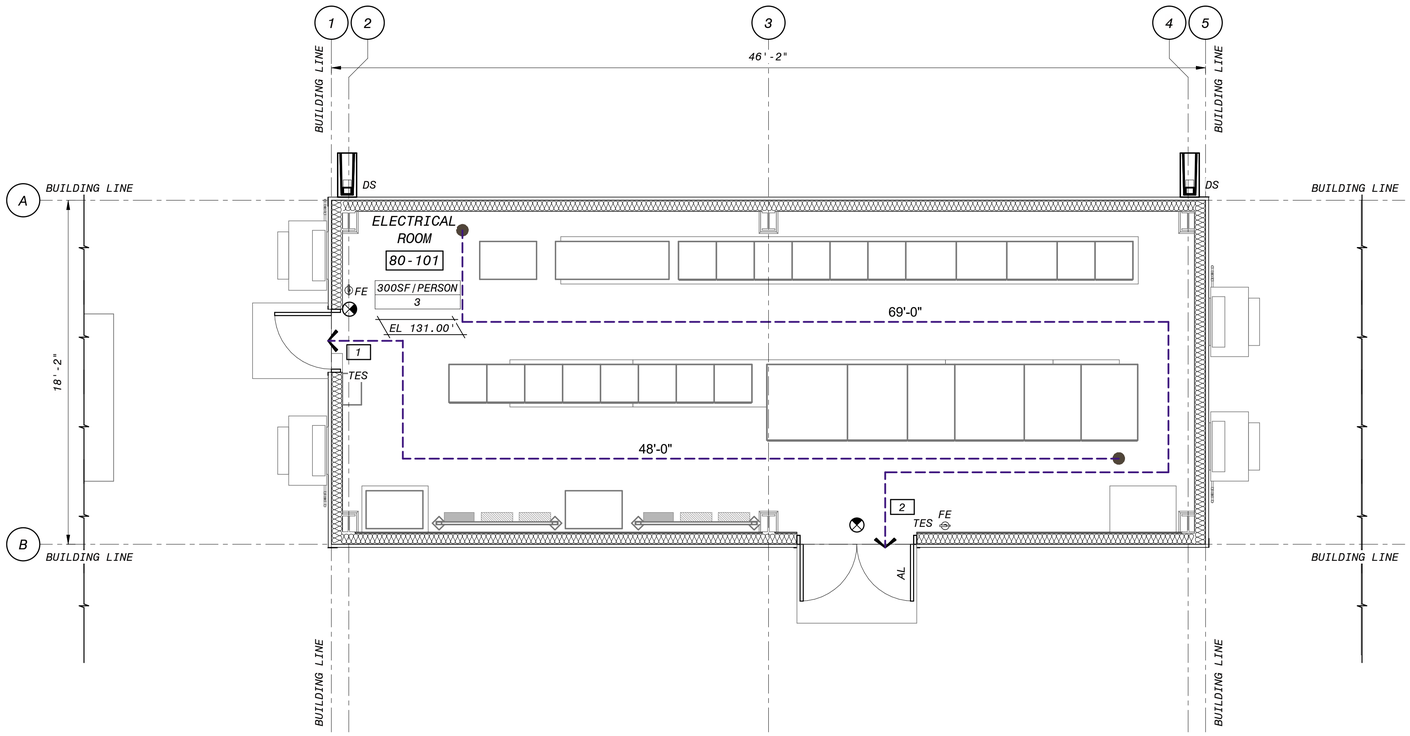

LIFESAFTY PLAN

1/4" = 1'-0"

GENERAL SHEET NOTES

1. BUILDING CONSTRUCTION TYPE IS II-B OCCUPANCY IS F-2 (LOW HAZARD INDUSTRIAL)
2. WALLS CEILINGS AND ROOFS NOT OTHERWISE IDENTIFIED ARE NOT FIRE RATED

SHEET KEYNOTES

LIFE SAFETY LEGEND

	FIRE EXTINGUISHER (FE)
X'-X"	PATH OF EGRESS TRAVEL
100SF/PERSON / 10	OCCUPANTS PER SF / OCCUPANT LOAD
5	CUMULATIVE OCCUPANT LOAD AT EXIT
	EXIT SYMBOL
TES	TACTILE EXIT SIGN
AL	ACTIVE LEAF
DS	DOWNSPOUT

BUILDING CODE ANALYSIS

ELECTRICAL BUILDING	
APPLICABLE BUILDING CODES: 2016 CALIFORNIA BUILDING STANDARDS CODE	
OCCUPANCY	F-2
ACTUAL FLOOR AREA	863 SF TOTAL
ACTUAL HEIGHT	1 STORY (16.67 FT)
TYPE OF CONSTRUCTION	TYPE II-B
ALLOWABLE HEIGHT	2 STORIES (55 FT)
ALLOWABLE AREA	92,000 SF
DESIGN OCCUPANT LOAD	3 PERSONS
ADA ACCESSIBILITY	YES
OCCUPANCY SEPARATION	NOT REQUIRED
FIRE SPRINKLERS	NOT REQUIRED

4' 2' 0' 4' 8'

1/4" = 1'-0"

90% SUBMITTAL - NOT FOR CONSTRUCTION

NO.	BY	CHK	APP	DATE	REVISIONS AND RECORD OF USE

LICENSED ARCHITECT
BRUCE DOUGLAS FRASER
C 9787
REGISTERED PROFESSIONAL
STATE OF CALIFORNIA

FRASER SEMPLE ARCHITECTS
JOINT VENTURE
BLACK & VEATCH
FILANC

CITY OF MORRO BAY
MORRO BAY WATER RECLAMATION FACILITY (WRF)

ELECTRICAL BUILDING
ARCHITECTURAL
LIFE SAFETY PLAN

DESIGNED: BDF
DETAILED: ANH
CHECKED: -
APPROVED: -
DATE:

0 1/2 1
IF THIS BAR DOES NOT MEASURE 1" THEN DRAWING IS NOT TO FULL SCALE

PROJECT NO.
400530

80-A-101
SHEET
OF

PLOTTED: 1/20/2020 2:39:02 PM
D400530

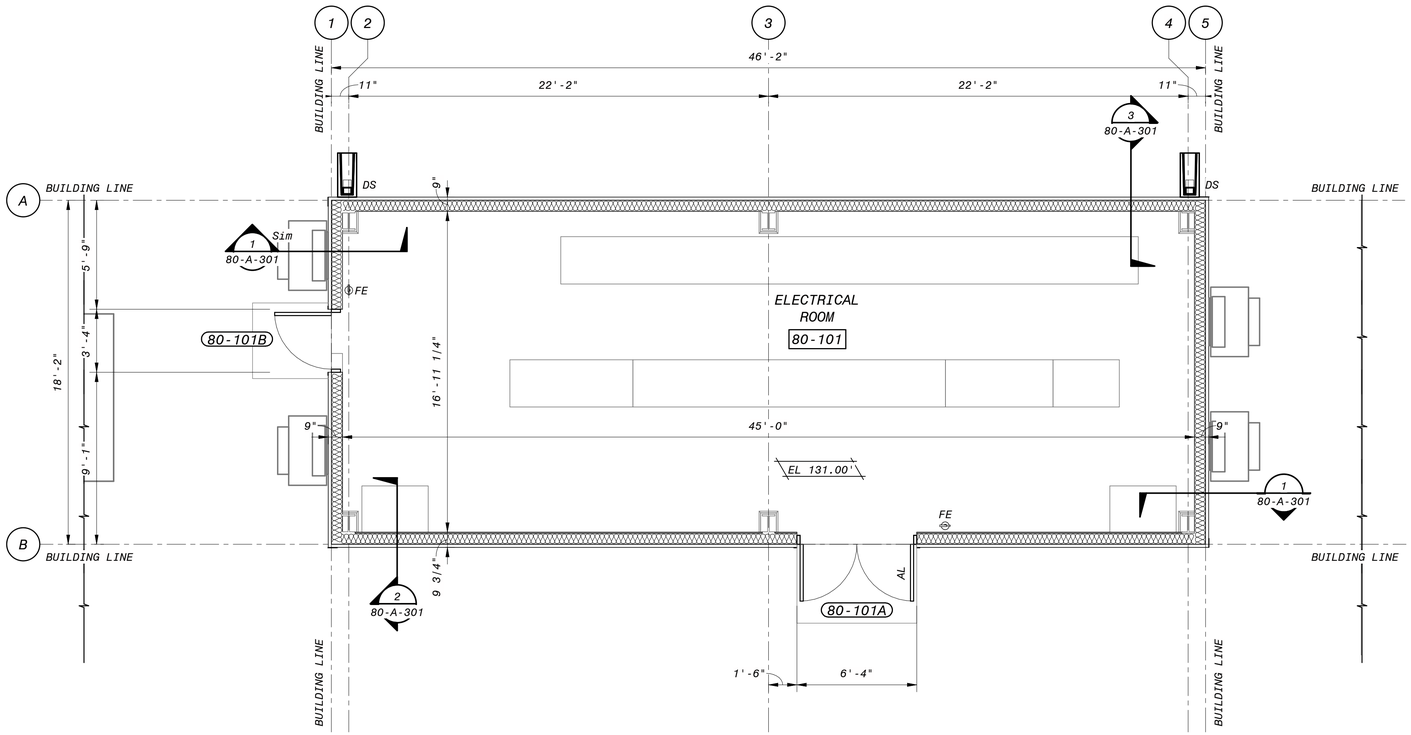

OPERATING FLOOR PLAN

1/4" = 1'-0"

GENERAL SHEET NOTES

SHEET KEYNOTES

SHEET KEYNOTES

X	ACCESSORY ITEM
101A	DOOR
H1	ACCESS HATCH
00	LABORATORY CABINET
101A	LOUVER
A	WALL or WALL PANEL TYPE
W	WINDOW
WS	WINDOW SYSTEM or FRAME TYPE
ROOM NAME 101	ROOM NAME & NUMBER

4' 2' 0' 4' 8'

1/4" = 1'-0"

90% SUBMITTAL - NOT FOR CONSTRUCTION

NO.	BY	CHK	APP	DATE	REVISIONS AND RECORD OF USE

LICENSED ARCHITECT
BRUCE DOUGLAS FRASER
C 9787
REGISTERED PROFESSIONAL
STATE OF CALIFORNIA

FRASER SEMPLE ARCHITECTS

BLACK & VEATCH

JOINT VENTURE

FILANC

CITY OF MORRO BAY
MORRO BAY WATER
RECLAMATION FACILITY (WRF)

ELECTRICAL BUILDING
ARCHITECTURAL
OPERATING FLOOR PLAN

DESIGNED: BDF
DETAILED: ANH
CHECKED: -
APPROVED: -
DATE:

0 1/2 1

IF THIS BAR DOES NOT MEASURE 1" THEN DRAWING IS NOT TO FULL SCALE

PROJECT NO.
400530

80-A-102
SHEET
OF

PLOTTED: 11/20/2020 2:34:49 PM
D400530

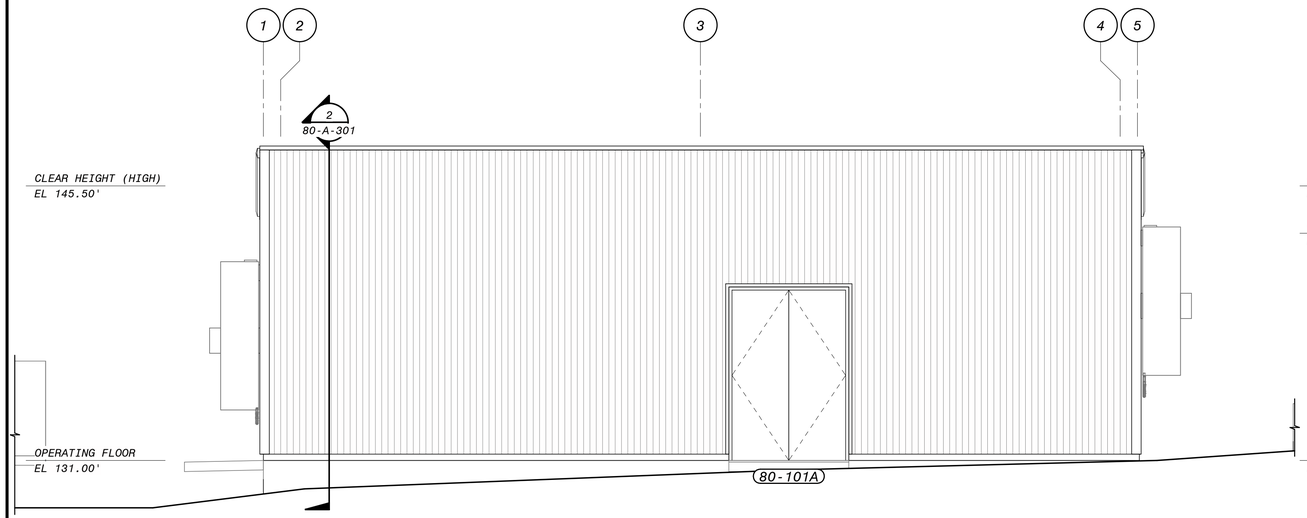

EAST ELEVATION

1/4" = 1'-0"

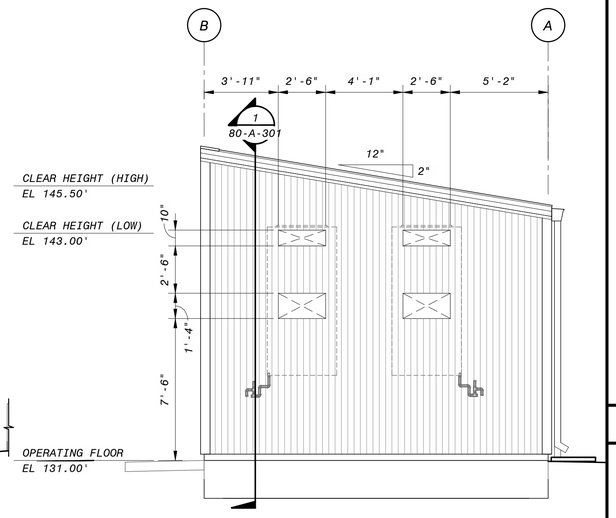

NORTH ELEVATION

1/4" = 1'-0"

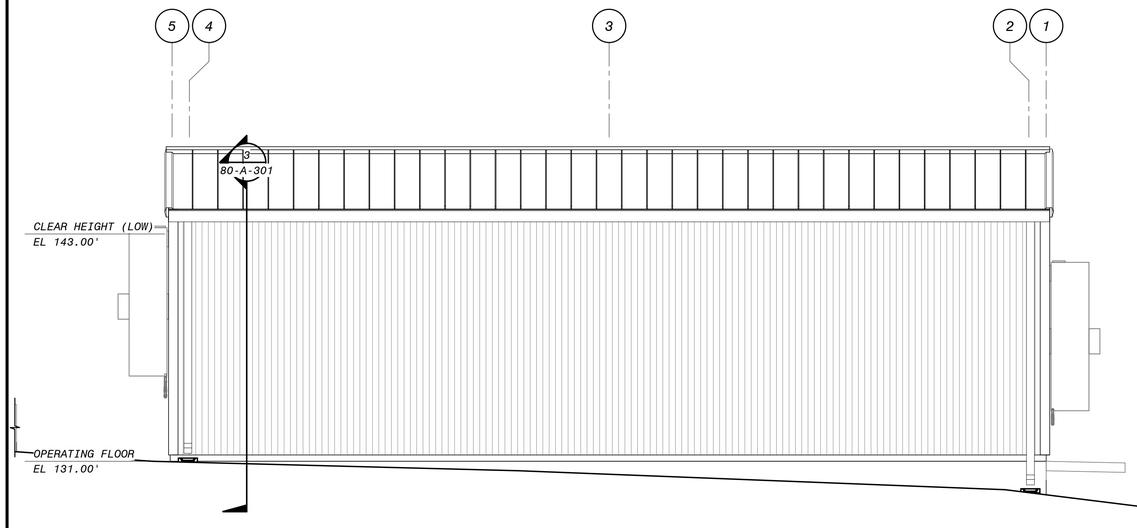

WEST ELEVATION

1/4" = 1'-0"

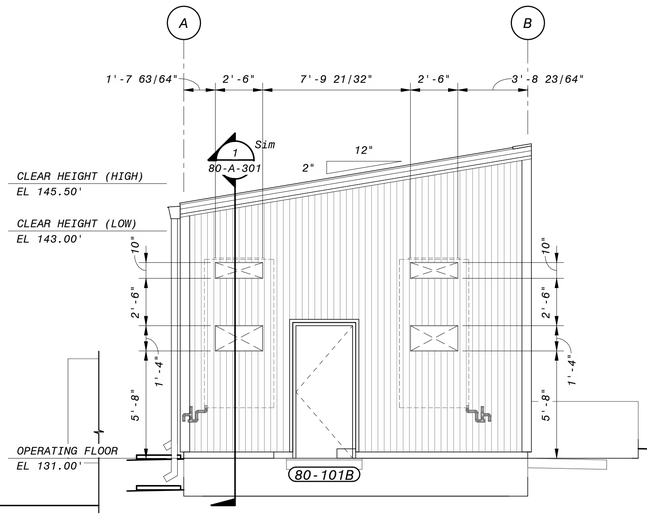

SOUTH ELEVATION

1/4" = 1'-0"

4' 2' 0' 4' 8'

1/4" = 1'-0"

90% SUBMITTAL - NOT FOR CONSTRUCTION

GENERAL SHEET NOTES

SHEET KEYNOTES

NO.	BY	CHK	APP	DATE	REVISIONS AND RECORD OF USE

LICENSED ARCHITECT
BRUCE DOUGLAS FRASER
C 9787
EXPIRES 12/31/21
STATE OF CALIFORNIA

FRASER SEIPLE ARCHITECTS

JOINT VENTURE

BLACK & VEATCH

FILANC

CITY OF MORRO BAY
MORRO BAY WATER
RECLAMATION FACILITY (WRF)

ELECTRICAL BUILDING
ARCHITECTURAL
BUILDING ELEVATIONS

DESIGNED: BDF
DETAILED: ANH
CHECKED: -
APPROVED: -
DATE:

0 1/2 1

IF THIS BAR DOES NOT MEASURE 1" THEN DRAWING IS NOT TO FULL SCALE

PROJECT NO.
400530

80-A-201
SHEET
OF

PLOTTED: 1/20/2020 2:34:52 PM
D400530

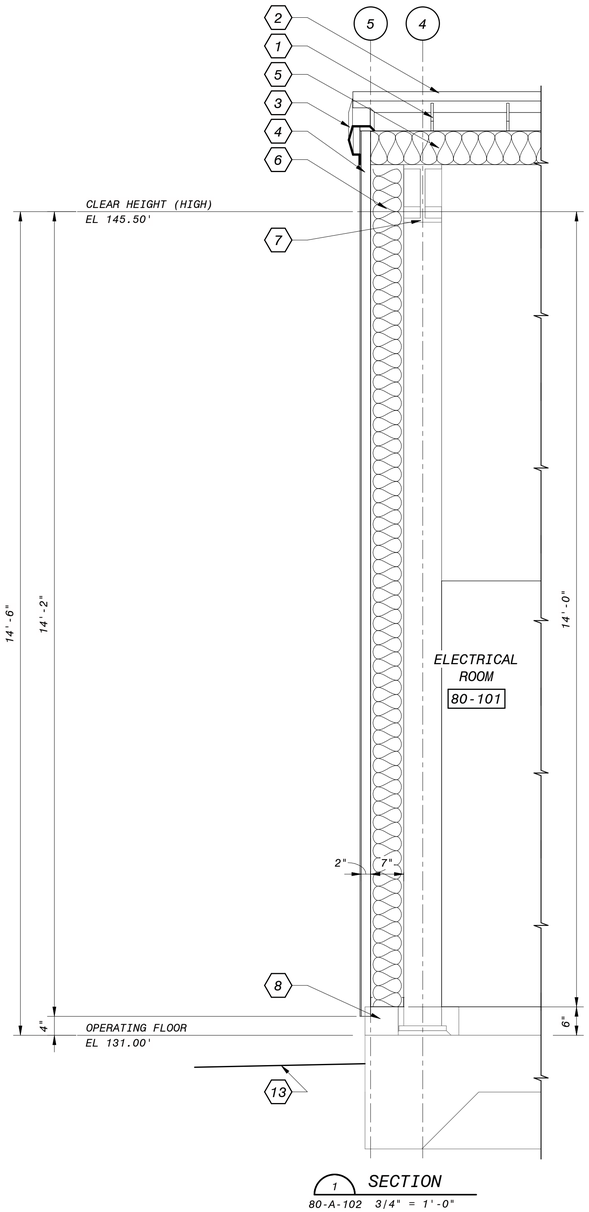

1 SECTION
80-A-102 3/4" = 1'-0"

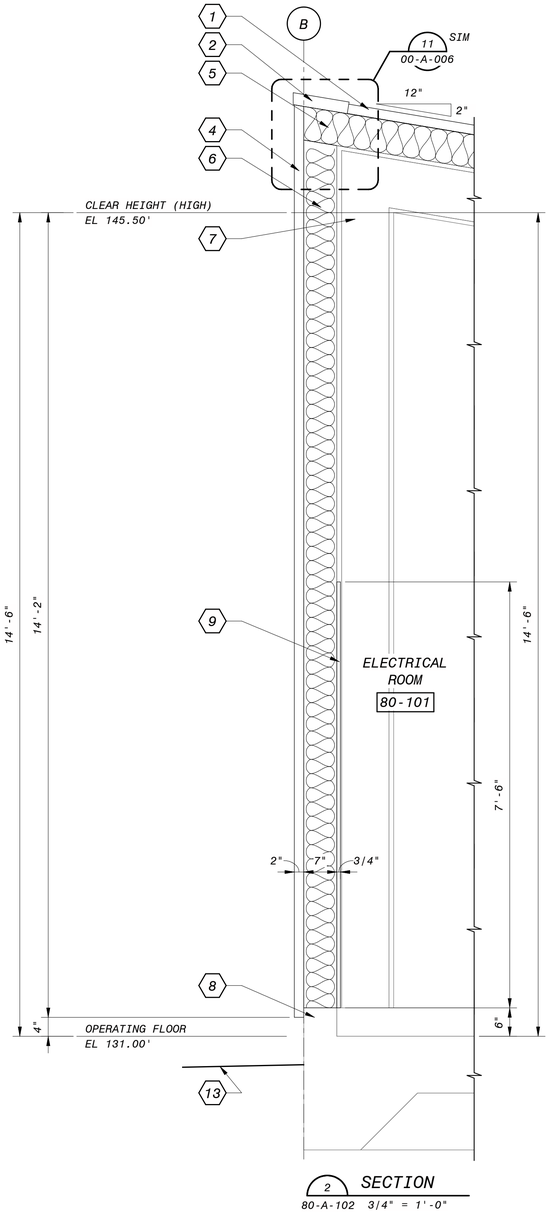

2 SECTION
80-A-102 3/4" = 1'-0"

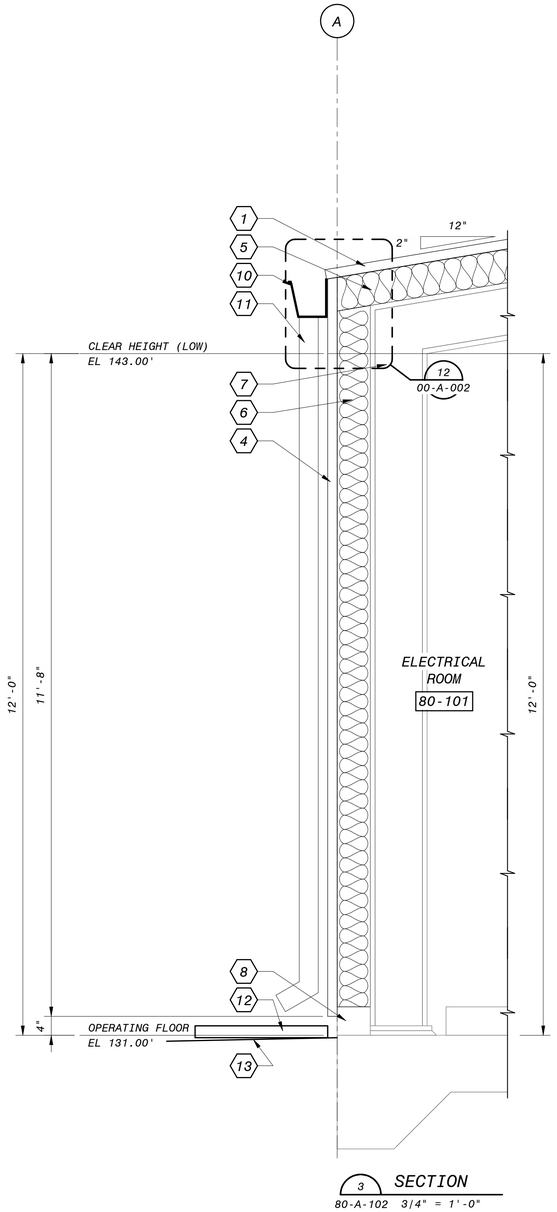

3 SECTION
80-A-102 3/4" = 1'-0"

12" 6" 0' 1' 2' 3'
3/4" = 1'-0"

90% SUBMITTAL - NOT FOR CONSTRUCTION

GENERAL SHEET NOTES

SHEET KEYNOTES

1. METAL ROOFING PANELS
2. PRE-FINISHED METAL TOP FASCIA TRIM
3. PRE-FINISHED METAL RAKE TRIM
4. PRE-FINISHED RIBBED METAL SIDING
5. PURLIN SPACE WITH PINCH INSULATION
6. WALL GIRT FRAMING WITH PINCH INSULATION
7. PRE-ENGINEERED FRAME PER METAL BUILDING MANUFACTURER
8. CONCRETE PERIMETER CURB - SEE STRUCTURAL DRAWINGS
9. 3/4" FIRE RETARDANT TREATED PLYWOOD SHEATHING
10. PRE-FINISHED METAL FASCIA GUTTER
11. PRE-FINISHED METAL DOWNSPOUT
12. PRECAST CONCRETE SPLASH BLOCK
13. FINISHED GRADE

NO.	BY	CHK	APP	DATE	REVISIONS AND RECORD OF USE

LICENSED ARCHITECT
BRUCE DOUGLAS FRASER
C 9787
REGISTERED PROFESSIONAL
STATE OF CALIFORNIA

FRASER SEIPLE ARCHITECTS

JOINT VENTURE

BLACK & VEATCH

FILANC

CITY OF MORRO BAY
MORRO BAY WATER
RECLAMATION FACILITY (WRF)

ELECTRICAL BUILDING
ARCHITECTURAL
WALL SECTIONS

DESIGNED: BDF
DETAILED: ANH
CHECKED: -
APPROVED: -
DATE:

0 1/2 1
IF THIS BAR DOES NOT MEASURE 1" THEN DRAWING IS NOT TO FULL SCALE

PROJECT NO.
400530

80-A-301
SHEET
OF

PLOTTED: 1/20/2020 2:34:53 PM
D400530

ROOM FINISH SCHEDULE

ROOM No.	ROOM NAME	FLOOR		WALLS												CEILING			REMARKS
				NORTH			EAST			SOUTH			WEST						
		MATERIAL	FINISH	MATERIAL	FINISH	BASE	MATERIAL	FINISH	BASE	MATERIAL	FINISH	BASE	MATERIAL	FINISH	BASE	MATERIAL	FINISH	HEIGHT	
ELECTRICAL BUILDING																			
80-101	ELECTRICAL ROOM	CO	FS	EXP	FF	NO	EXP/PLY	FF	NO	EXP	FF	NO	EXP	FF	NO	EXP	FF	12'-0"	

DOOR SCHEDULE

DOOR ID	DOOR SIZE			DOOR							FRAME				REMARKS
No. (D)		WIDTH	HEIGHT	MATERIAL	HEAD	JAMB	SILL	TYPE (D)	HARDWARE	RATING	MATERIAL	HEAD	JAMB	DEPTH	
ELECTRICAL BUILDING															
80-101A	PR	3'-0"	9'-0"	FRP	30/00-A-001	33/00-A-001	40/00-A-001	A/A	16	-	FRP	2"	2"	5 3/4"	
80-101B		3'-0"	7'-0"	FRP	30/00-A-001	33/00-A-001	40/00-A-001	A	13	-	FRP	2"	2"	5 3/4"	

SCHEDULE LEGEND

CO - CONCRETE
EXP - EXPOSED CONSTRUCTION
FF - FACTORY FINISH
FRP - FIBER REINFORCED PLASTIC
FS - FLOOR SEALER
NO - NONE
PLY - PLYWOOD
PR - PAIR

DOOR TYPES

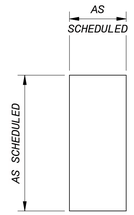

A

90% SUBMITTAL - NOT FOR CONSTRUCTION

NO.	BY	CHK	APP'D	DATE	REVISIONS AND RECORD OF USE

LICENSED ARCHITECT
BRUCE DOUGLAS FRASER
C 9787
EXPIRES 12/31/21
STATE OF CALIFORNIA

FRASER SEIPLE ARCHITECTS
JOINT VENTURE
BLACK & VEATCH
FILANC

CITY OF MORRO BAY
MORRO BAY WATER
RECLAMATION FACILITY (WRF)

ELECTRICAL BUILDING
ARCHITECTURAL
SCHEDULES

DESIGNED: BDF
DETAILED: ANH
CHECKED: -
APPROVED: -
DATE:

0 1/2 1
IF THIS BAR DOES NOT MEASURE 1" THEN DRAWING IS NOT TO FULL SCALE

PROJECT NO.
400530

80-A-601
SHEET
OF

PLOTTED: 11/20/2020 2:34:53 PM
D400530

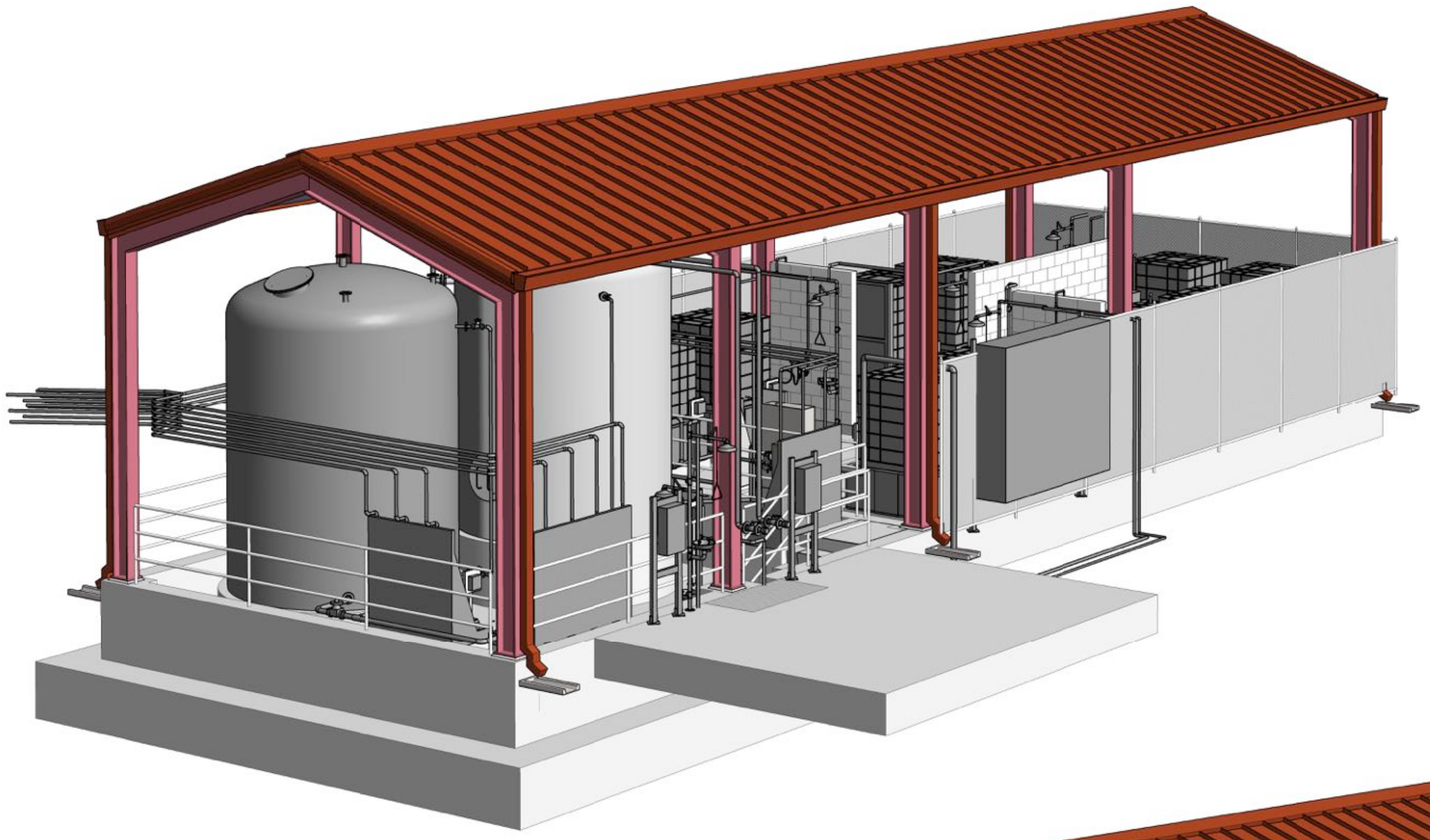

NORTHWEST PERSPECTIVE

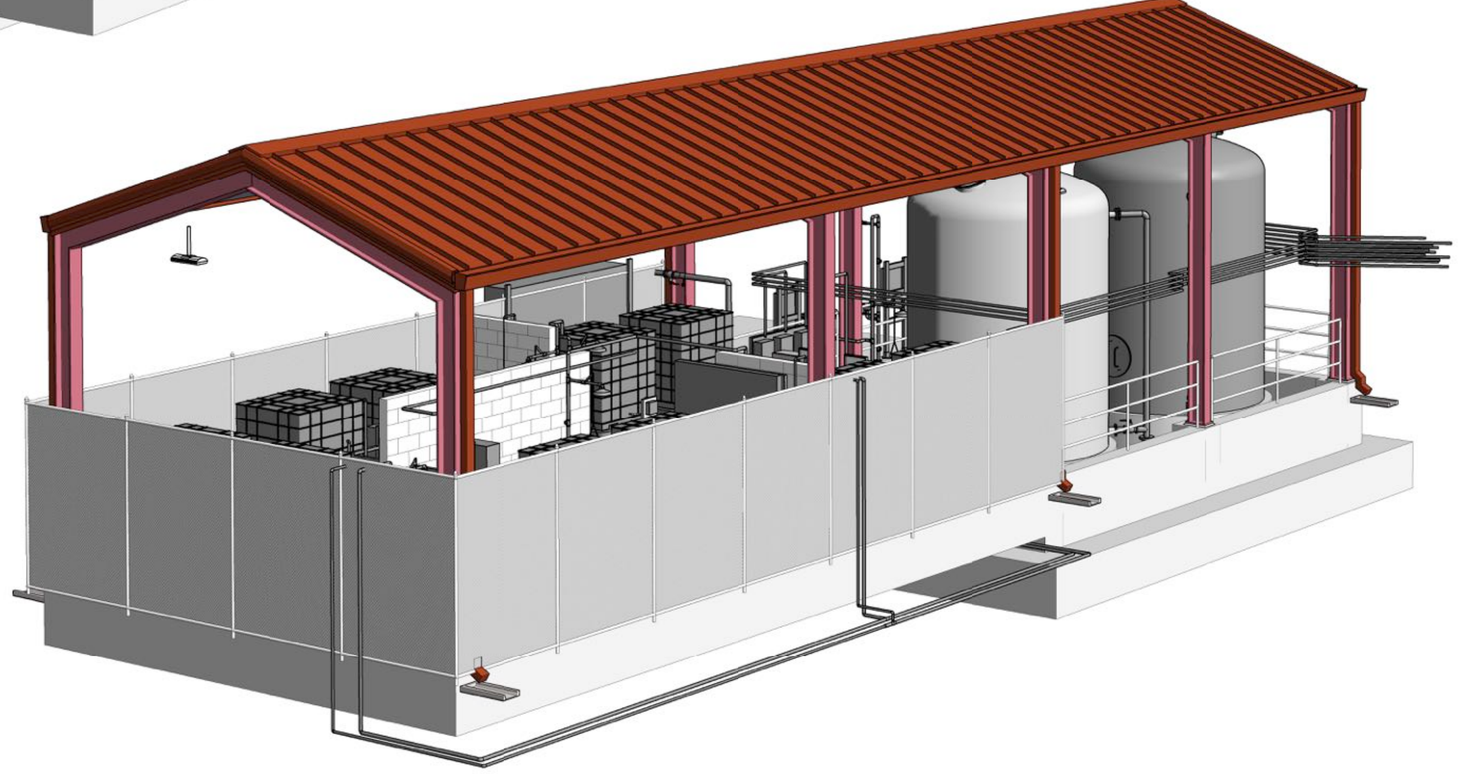

SOUTHEAST PERSPECTIVE

60% SUBMITTAL - NOT FOR CONSTRUCTION

NO.	BY	CHK	APP'D	DATE	REVISIONS AND RECORD OF USE

LICENSED ARCHITECT
BRUCE DOUGLAS FRASER
C 9787
STATE OF CALIFORNIA

FRASER SEMPLE ARCHITECTS

JOINT VENTURE

BLACK & VEATCH

FILANC

CITY OF MORRO BAY
MORRO BAY WATER
RECLAMATION FACILITY (WRF)

CHEMICAL FACILITY
ARCHITECTURAL
PERSPECTIVES

DESIGNED: BDF
DETAILED: ANH
CHECKED: -
APPROVED: -
DATE:

0 1/2 1
IF THIS BAR DOES NOT MEASURE 1" THEN DRAWING IS NOT TO FULL SCALE

PROJECT NO.
400530

90-A-001
SHEET
OF

PLOTTED: 3/3/2020 2:29:08 PM
D400530

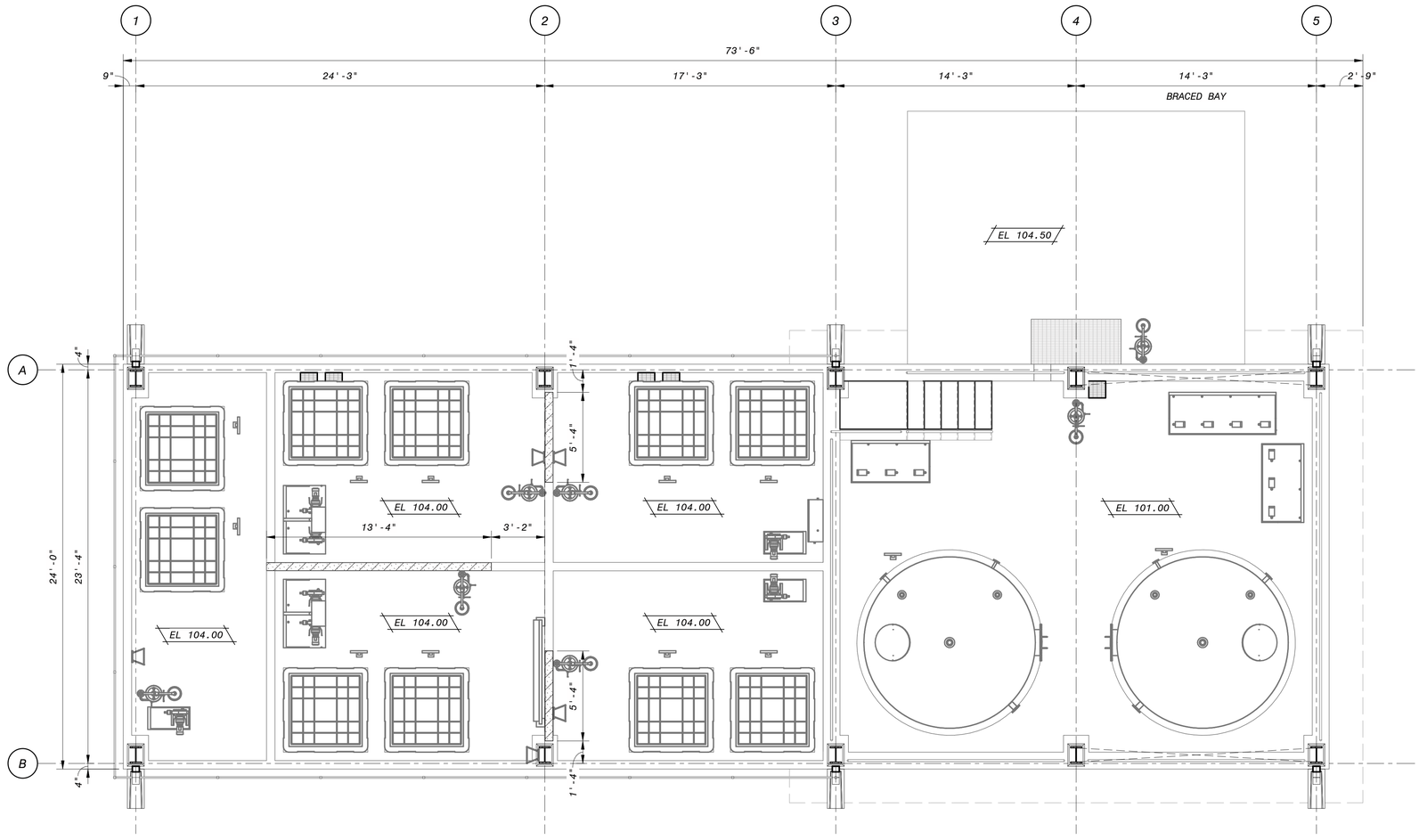

OPERATING FLOOR PLAN

1/4" = 1'-0"

4' 2' 0' 4' 8'

1/4" = 1'-0"

60% SUBMITTAL - NOT FOR CONSTRUCTION

GENERAL SHEET NOTES

SHEET KEYNOTES

NO.	BY	CHK	APP	DATE	REVISIONS AND RECORD OF USE

LICENSED ARCHITECT
BRUCE DOUGLAS FRASER
C 9787
STATE OF CALIFORNIA

FRASER SEMPLE ARCHITECTS

JOINT VENTURE

BLACK & VEATCH

FILANC

CITY OF MORRO BAY
MORRO BAY WATER
RECLAMATION FACILITY (WRF)

CHEMICAL FACILITY
ARCHITECTURAL
OPERATING FLOOR PLAN

DESIGNED: BDF
DETAILED: ANH
CHECKED: -
APPROVED: -
DATE:

0 1/2 1
IF THIS BAR DOES NOT MEASURE 1" THEN DRAWING IS NOT TO FULL SCALE

PROJECT NO.
400530

90-A-101
SHEET
OF

PLOTTED: 3/3/2020 2:29:09 PM
D400530

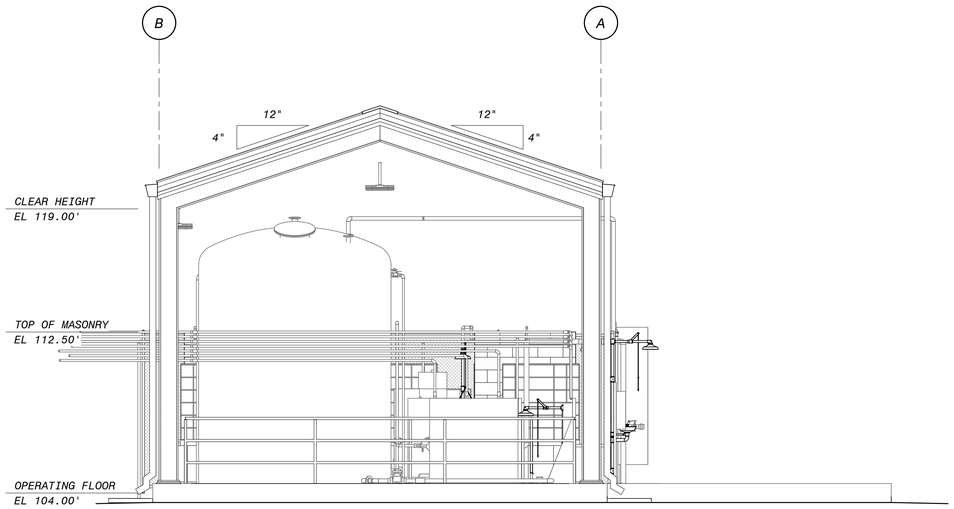

NORTH ELEVATION
1/4" = 1'-0"

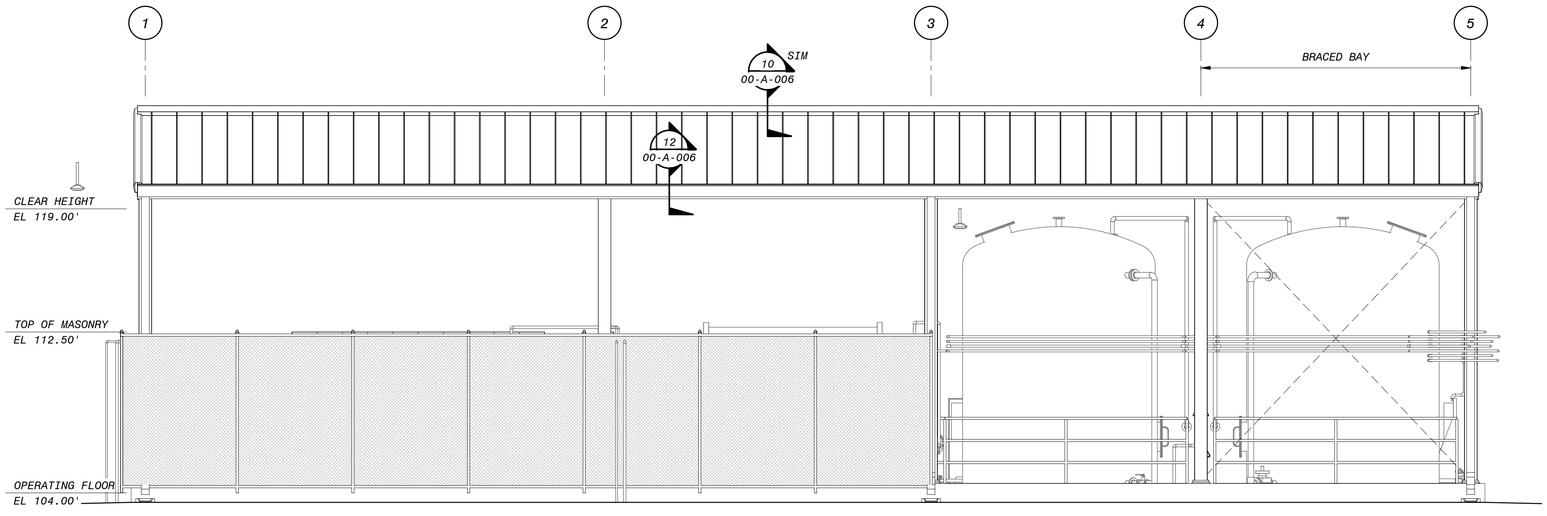

EAST ELEVATION
1/4" = 1'-0"

GENERAL SHEET NOTES

SHEET KEYNOTES

4' 2' 0' 4' 8'
1/4" = 1'-0"

60% SUBMITTAL - NOT FOR CONSTRUCTION

NO.	BY	CHK	APP	DATE	REVISIONS AND RECORD OF USE

LICENSED ARCHITECT
BRUCE DOUGLAS FRASER
C 9787
EXPIRES 12/31/21
STATE OF CALIFORNIA

FRASER SEIPLE ARCHITECTS

JOINT VENTURE

BLACK & VEATCH

FILANC

CITY OF MORRO BAY
MORRO BAY WATER
RECLAMATION FACILITY (WRF)

CHEMICAL FACILITY
ARCHITECTURAL
ELEVATIONS

DESIGNED: BDF
DETAILED: ANH
CHECKED: -
APPROVED: -
DATE:

0 1/2 1
IF THIS BAR DOES NOT MEASURE 1" THEN DRAWING IS NOT TO FULL SCALE

PROJECT NO.
400530

90-A-201
SHEET
OF

PLOTTED: 3/3/2020 2:29:12 PM
D400530

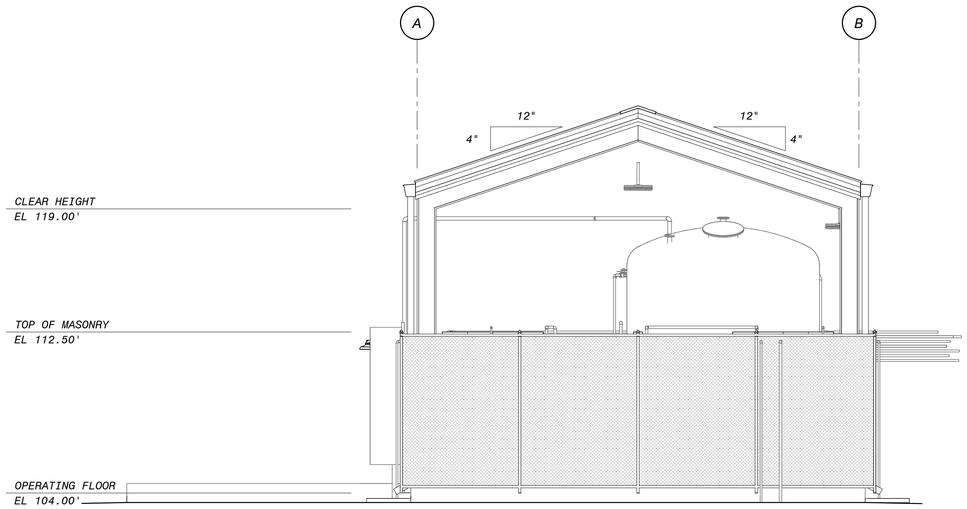

SOUTH ELEVATION
1/4" = 1'-0"

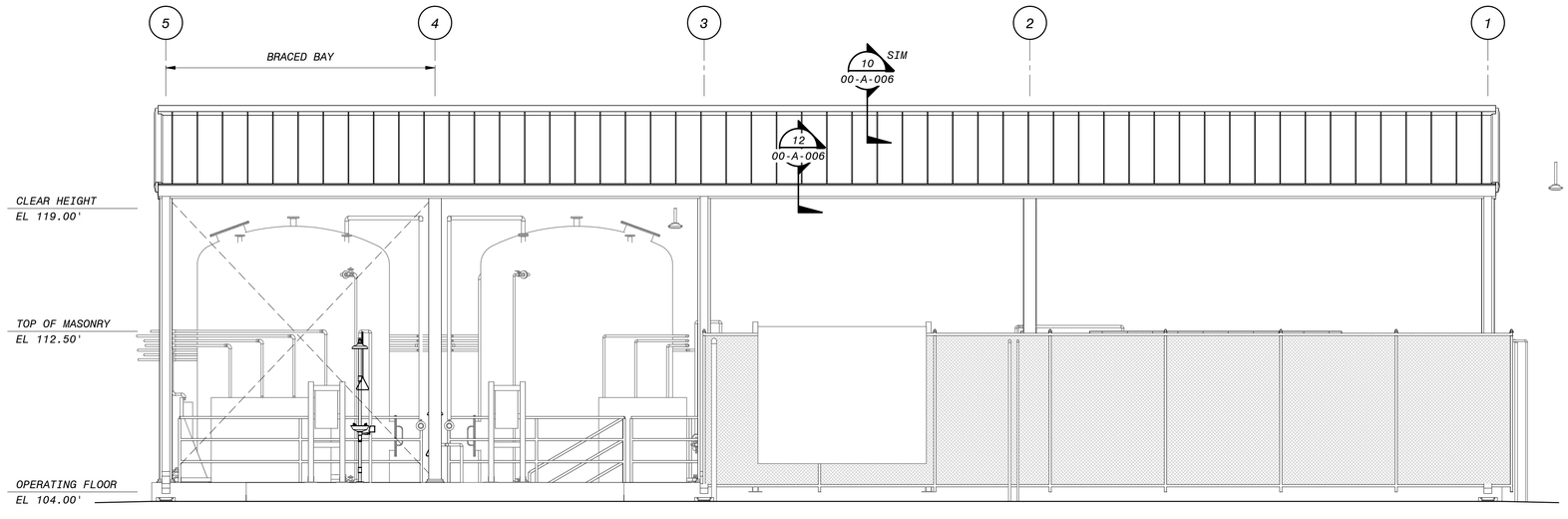

WEST ELEVATION
1/4" = 1'-0"

GENERAL SHEET NOTES

SHEET KEYNOTES

4' 2' 0' 4' 8'
1/4" = 1'-0"

60% SUBMITTAL - NOT FOR CONSTRUCTION

NO.	BY	CHK'D APP'D	DATE	REVISIONS AND RECORD OF USE

LICENSED ARCHITECT
BRUCE DOUGLAS FRASER
C 9787
EXPIRES 12/31/21
STATE OF CALIFORNIA

FRASER SEMPLE ARCHITECTS

JOINT VENTURE

BLACK & VEATCH

FILANC

CITY OF MORRO BAY
MORRO BAY WATER
RECLAMATION FACILITY (WRF)

CHEMICAL FACILITY
ARCHITECTURAL
ELEVATIONS

DESIGNED: BDF
DETAILED: ANH
CHECKED: -
APPROVED: -
DATE:

0 1/2 1
IF THIS BAR DOES NOT MEASURE 1" THEN DRAWING IS NOT TO FULL SCALE

PROJECT NO.
400530

90-A-202
SHEET
OF

PLOTTED: 3/3/2020 2:29:16 PM
D400530

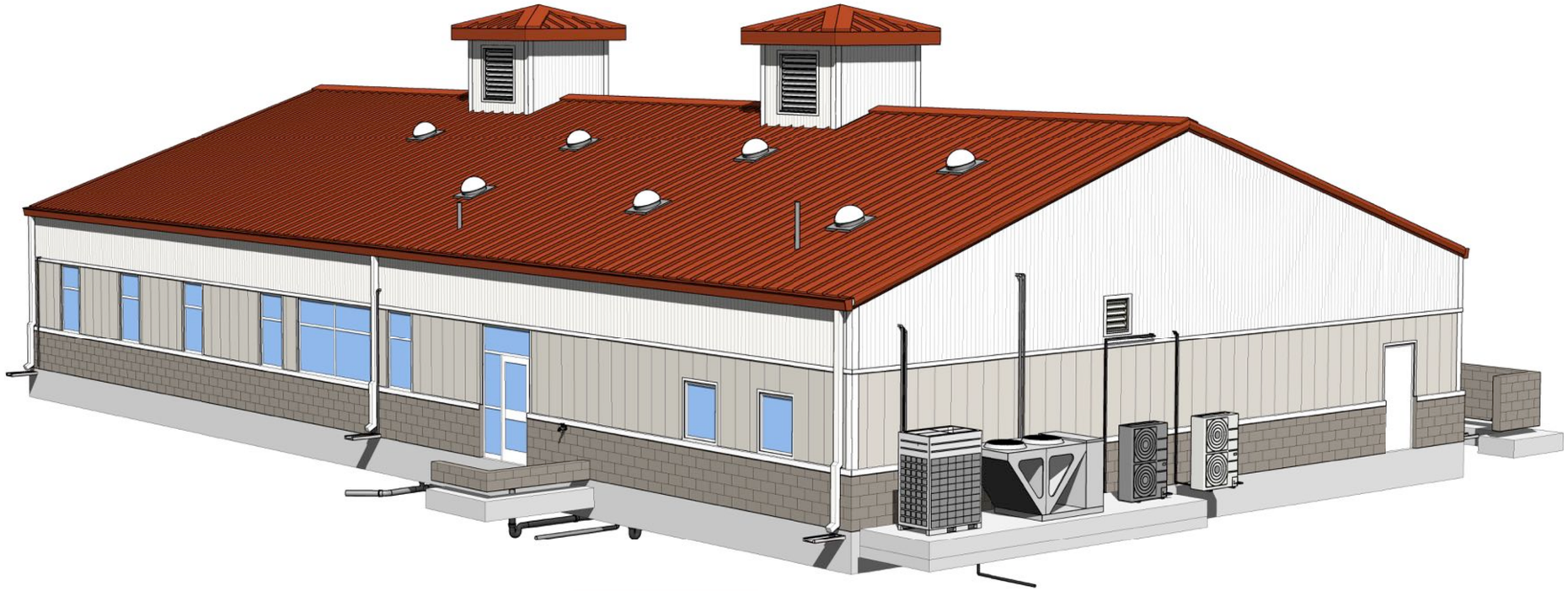

NORTHWEST PERSPECTIVE



SOUTHEAST PERSPECTIVE

90% SUBMITTAL - NOT FOR CONSTRUCTION

NO.	BY	CHK	APP	DATE	REVISIONS AND RECORD OF USE
B	EVB	BDF	EVB	7/30/2019	60% SUBMITTAL
A	EVB	BDF	EVB	3/5/2019	30% SUBMITTAL

LICENSED ARCHITECT
BRUCE DOUGLAS FRASER
C 9787
STATE OF CALIFORNIA

FRASER SEMPLE ARCHITECTS

JOINT VENTURE

BLACK & VEATCH

FILANC

CITY OF MORRO BAY
MORRO BAY WATER
RECLAMATION FACILITY (WRF)

OPERATIONS BUILDING
ARCHITECTURAL
PERSPECTIVES

DESIGNED: BDF
DETAILED: ANH
CHECKED: -
APPROVED: -
DATE:

0 1/2 1
IF THIS BAR DOES NOT MEASURE 1" THEN DRAWING IS NOT TO FULL SCALE

PROJECT NO.
400530

95-A-001
SHEET
OF

PLOTTED: 3/16/2020 11:04:37 AM
D400530

STATE OF CALIFORNIA
ENVELOPE COMPONENT APPROACH
CEC-NRCC-ENV-01-E (Revised 01/16) CALIFORNIA ENERGY COMMISSION

CERTIFICATE OF COMPLIANCE NRCC-ENV-01-E
Envelope Component Approach
Project Name: Morro Bay Water Reclamation Facility Operations Building Date Prepared: March 24, 2020

A. GENERAL INFORMATION

01	Project Location:	555 South Bay Boulevard	06	Compliance Method:	☑ Component ☐ Unconditioned (file Affidavit)
02	CA City and Zip Code:	Morro Bay 93442	07	Building Front Orientation:	East
03	Climate Zone:	5	08	Phase of Construction:	☑ New Construction ☐ Additions ☐ Alteration
04	Total Conditioned Floor Area:	5,825 S.F.	09	Building Occupancy:	☑ Nonresidential ☐ High Rise Residential ☐ Hotel/Motel Guest Room
05	Building Type:	☐ Schools (Public Schools) ☐ Relocatable Public School Building ☑ Conditioned Spaces ☐ Unconditioned Spaces ☐ Skylight Area for Large Enclosed Space > 5000 ft² (If checked, include the NRCC-ENV-04-E with submittal)			

B. ENVELOPE DETAILS - FRAMED

01	02	03	04	05	06	07	08		09	10	11
							Appendix JA4 Reference				
Tag/ID	Assembly Type	Frame Material	Frame Depth	Frame Spacing	Cavity R-value	Continuous Insulation R-value	Table	Cell	Proposed U-Factor	Required U-Factor from Tables 140.3-B, C, or D	Field Inspection Comments
ROOF 01	Roof	Metal	8.5"	60"	30	NA	4.2.7	F15	0.034	0.041	
WALL 01	Wall	Metal	15.75"	24"	21	NA	4.2.7	F15	0.045	0.061	concrete masonry
WALL 02	Wall	Metal	14"	24"	21	NA	4.3.3	A26	0.048	0.061	

Add Row Remove Last

C. ENVELOPE DETAILS - NON-FRAMED

01	02	03	04	05	06	07		08	09	10
						Appendix JA4 Reference				
Tag/ID	Assembly Type	Assembly Materials	Thickness (inches)	Interior or Core Insulation R-Value	Continuous Insulation R-Value	Table	Cell	Proposed U-Factor	Required U-Factor from Tables 140.3-B, C, or D	Field Inspection Comments

STATE OF CALIFORNIA
ENVELOPE COMPONENT APPROACH
CEC-NRCC-ENV-01-E (Revised 01/16) CALIFORNIA ENERGY COMMISSION

CERTIFICATE OF COMPLIANCE NRCC-ENV-01-E
Envelope Component Approach
Project Name: Morro Bay Water Reclamation Facility Operations Building Date Prepared: March 24, 2020

Add Row Remove Last

D. ENVELOPE DETAILS - MASS

01	02	03	04	05	06	07	08		09	10	11
							Appendix JA4 Reference				
Tag/ID	Mass Type	Density (lb/ft³)	Mass Thickness (inches)	Furring Strip Thickness (inches)	Interior Insulation R-Value	Exterior Insulation R-Value	Table	Cell	Proposed U-Factor	Required U-Factor from Tables 140.3-B, C, or D	Field Inspection Comments

Add Row Remove Last

E. ROOFING PRODUCTS (COOL ROOF)

01	02	03	04	05	06	07	08	09	10	11
				Proposed			Minimum Required			
Mass Roof 25 lb/ft² or Greater	Roof Pitch	CRRC Product ID Number	Product Type	Aged Solar Reflectance[1]	Thermal Emittance	SRI[2] (Optional)	Aged Solar Reflectance	Thermal Emittance	SRI (Optional)	Comments
☐	4:12	BN5R143B	metal	☑ 0.34	0.85		0.63	0.75		

Add Row Remove Last

- An aged solar reflectance less than 0.63 is allowed provided the maximum roof/ceiling U-factor in TABLE 140.3 is not exceeded	
- High-rise residential buildings and Hotels and Motels with low-sloped roofs in Climate Zones 1 through 8, 12, and 16 are exempted from aged Solar Reflectance and thermal emittance requirements	
- High-rise residential and Hotels/Motels with steep-sloped roofs in Climate Zones 1 and 16 are exempt from aged Solar Reflectance and thermal emittance requirements	
- The roof area covered by building integrated photovoltaic panels and building integrated solar thermal panels are exempt from aged Solar Reflectance and thermal emittance requirements	
- To apply Liquid Field Applied Coatings, the coating must be applied across the entire roof surface and meet the dry mil thickness or coverage recommended by the coatings manufacturer and meet minimum performance requirements listed in §110.8(j)4. Select the applicable coating:	
☐ Aluminum-Pigmented Asphalt Roof Coating ☐ Cement-Based Roof Coating ☐ Other	

STATE OF CALIFORNIA
ENVELOPE COMPONENT APPROACH
CEC-NRCC-ENV-01-E (Revised 01/16) CALIFORNIA ENERGY COMMISSION

CERTIFICATE OF COMPLIANCE NRCC-ENV-01-E
Envelope Component Approach
Project Name: Morro Bay Water Reclamation Facility Operations Building Date Prepared: March 24, 2020

NOTES:
1. Check the box if the aged Solar Reflectance was not available in the Cool Roof Council's Rated Product Directory, then use the equation in Section 110.8(i)2: $\rho_{aged} = 0.2 + \beta(\rho_{Initial} - 0.2)$ to obtain a calculated aged solar reflectance value. Where Initial is the Initial Solar Reflectance found in the directory and β is either 0.65 for Field-applied coatings or 0.70 for all other roofing products other than Field-Applied Coating.
2. Calculate the SRI Value by using the SRI-Worksheet and enter the resulting value in the SRI column above and attach a copy of the SRI-Worksheet (NRCC-ENV-03-E) to this compliance document.

F. AIR BARRIER

01	02	03	04	05
Name	Air Barrier Material Type	Air Barrier Assembly Type	Whole Building Air Leakage Testing	Comments

Add Row Remove Last

G. FENESTRATION PROPOSED AREAS AND EFFICIENCIES

01	02	03	04	05	06	07	08	09	10	11	12
					Proposed						
Tag/ID	Fenestration Type	Surface Area	Orientation	# of Panes	Max U-Factor	Max (R)SHGC	Min VT	Label	Overhang	Condition Status	Comments
WIN 01	storefront	203.7	North	2	0.55	0.48	0.51	NFRC	no	new	
WIN 02	storefront	225.0	East	2	0.55	0.48	0.51	NFRC	yes	new	
WIN 03	storefront	276.0	South	2	0.55	0.48	0.51	NFRC	yes	new	
SKY 01	skylight	16.8	Roof	2	0.32	0.37	0.59	NFRC	NA	new	

Add Row Remove Last

STATE OF CALIFORNIA
ENVELOPE COMPONENT APPROACH
CEC-NRCC-ENV-01-E (Revised 01/16) CALIFORNIA ENERGY COMMISSION

CERTIFICATE OF COMPLIANCE NRCC-ENV-01-E
Envelope Component Approach
Project Name: Morro Bay Water Reclamation Facility Operations Building Date Prepared: March 24, 2020

H. ENVELOPE MANDATORY MEASURES

Indicate location on building plans of Mandatory Envelope Measures Note Block: Sheet 95-A-003

INSTRUCTIONS TO APPLICANT ENVELOPE COMPLIANCE & WORKSHEETS (check box if worksheet are included)

For detailed instructions on the use of this and all Energy Efficiency Standards compliance documents, please refer to the Energy Commission website.

☑	NRCC-ENV-01-E	Certificate of Compliance. Required on plans for all submittals.
☐	NRCC-ENV-04-E	Use when minimum skylight requirements for large enclosed spaces are required in climate zones 2 through 15. Optional on plans.

STATE OF CALIFORNIA
ENVELOPE COMPONENT APPROACH
CEC-NRCC-ENV-01-E (Revised 01/16) CALIFORNIA ENERGY COMMISSION

CERTIFICATE OF COMPLIANCE NRCC-ENV-01-E
Envelope Component Approach
Project Name: Morro Bay Water Reclamation Facility Operations Building Date Prepared: March 24, 2020

DOCUMENTATION AUTHOR'S DECLARATION STATEMENT

1. I certify that this Certificate of Compliance documentation is accurate and complete.

Documentation Author Name: Bruce Fraser	Documentation Author Signature: Bruce Fraser — Digitally signed by Bruce Fraser Date: 2020.03.24 09:16:02 -07'00'
Company: Fraser Seiple Architects	Signature Date: March 24, 2020
Address: 971 Osos Street	CEA/HERS Certification Identification (if applicable):
City/State/Zip: San Luis Obispo, CA 93401	Phone: 805 544-6161

RESPONSIBLE PERSON'S DECLARATION STATEMENT

I certify the following under penalty of perjury, under the laws of the State of California:
1. The information provided on this Certificate of Compliance is true and correct.
2. I am eligible under Division 3 of the Business and Professions Code to accept responsibility for the building design or system design identified on this Certificate of Compliance (responsible designer).
3. The energy features and performance specifications, materials, components, and manufactured devices for the building design or system design identified on this Certificate of Compliance conform to the requirements of Title 24, Part 1 and Part 6 of the California Code of Regulations.
4. The building design features or system design features identified on this Certificate of Compliance are consistent with the information provided on other applicable compliance documents, worksheets, calculations, plans and specifications submitted to the enforcement agency for approval with this building permit application.
5. I will ensure that a completed signed copy of this Certificate of Compliance shall be made available with the building permit(s) issued for the building, and made available to the enforcement agency for all applicable inspections. I understand that a completed signed copy of this Certificate of Compliance is required to be included with the documentation the builder provides to the building owner at occupancy.

Responsible Designer Name: Bruce Fraser	Responsible Designer Signature: Bruce Fraser — Digitally signed by Bruce Fraser Date: 2020.03.24 09:16:25 -07'00'
Company: Fraser Seiple Architects	Date Signed: March 24, 2020
Address: 971 Osos Street	License: CA Architect #C9787
City/State/Zip: San Luis Obispo, CA 93401	Phone: 805 544-6161

NO. BY CHK APP
REVISIONS AND RECORD OF USE
DATE

LICENSED ARCHITECT BRUCE DOUGLAS FRASER C 9787 STATE OF CALIFORNIA EXPIRES 12-31-21

FRASER SEIPLE ARCHITECTS
JOINT VENTURE
BLACK & VEATCH
FILANC

CITY OF MORRO BAY
MORRO BAY WATER
WATER RECLAMATION FACILITY (WRF)

ARCHITECTURAL
OPERATIONS BUILDING
ENERGY CODE COMPLIANCE

DESIGNED: BDF
DETAILED: SS
CHECKED:
APPROVED:
DATE:

0 1/2 1
IF THIS BAR DOES NOT MEASURE 1" THEN DRAWING IS NOT TO FULL SCALE

PROJECT NO. 400530

95-A-002
SHEET
OF

PLOTTED: 3/27/2020 4:02 PM

2016 CGBSC SECTION A5.602

NONRESIDENTIAL OCCUPANCIES APPLICATION CHECKLIST

SECTION	CATEGORY	DESCRIPTION
REQUIREMENTS		
5.1 - 5.5	GENERAL	PROJECT MEETS ALL OF THE REQUIREMENTS OF DIVISIONS 5.1 THROUGH 5.5.
SITE DEVELOPMENT		
A5.105.1.1	EXISTING BUILDING STRUCTURE	MAINTAIN AT LEAST 75% OF EXISTING BUILDING STRUCTURE (INCLUDING STRUCTURAL FLOOR AND ROOF DECKING) AND ENVELOPE (EXTERIOR SKIN AND FRAMING) BASED ON SURFACE AREA.
A5.105.1.3	SALVAGE	SALVAGE ADDITIONAL ITEMS IN GOOD CONDITION SUCH AS LIGHT FIXTURES, PLUMBING FIXTURES AND DOORS FOR REUSE ON THIS PROJECT IN AN ONSITE STORAGE AREA OR FOR SALVAGE IN DEDICATED COLLECTION BINS. DOCUMENT THE WEIGHT OR NUMBER OF THE ITEMS SALVAGED.
5.106.1	STORM WATER POLLUTION PREVENTION	BEST MANAGEMENT PRACTICES (BMP) IN SECTION 5.106.1.2.
5.106.8	LIGHT POLLUTION REDUCTION	(N) OUTDOOR LIGHTING SYSTEMS SHALL BE DESIGNED AND INSTALLED TO COMPLY WITH THE FOLLOWING: 1. THE MINIMUM REQUIREMENTS IN THE CALIFORNIA ENERGY CODE FOR LIGHTING ZONES 1-4 AS DEFINED IN CHAPTER 10 OF THE CALIFORNIA ADMINISTRATIVE CODE. 2. BACKLIGHT, UPLIGHT AND GLARE (BUG) RATINGS AS DEFINED IN IESNA TM-15-11. 3. ALLOWABLE BUG RATINGS NOT EXCEEDING THOSE SHOWN IN TABLE 5.106.8.
5.106.10	GRADING AND PAVING	CONSTRUCTION PLANS SHALL INDICATE HOW SITE GRADING OR DRAINAGE SYSTEM WILL MANAGE ALL SURFACE WATER FLOWS TO KEEP WATER FROM ENTERING BUILDINGS. EXAMPLES OF METHODS TO MANAGE SURFACE WATER INCLUDE THOSE SHOWN IN ITEMS 1-5.
ENERGY EFFICIENCY		
5.201.1	SCOPE	BUILDING MEETS OR EXCEEDS THE REQUIREMENTS OF THE CALIFORNIA BUILDING ENERGY EFFICIENCY STANDARDS.
INDOOR WATER USE		
5.303.2	WATER REDUCTION	PLUMBING FIXTURES SHALL MEET THE MAXIMUM FLOW RATE VALUES SHOWN IN TABLE 5.303.2.3.
5.303.3	WATER CONSERVING PLUMBING FIXTURES AND FITTINGS	PLUMBING FIXTURES (WATER CLOSETS AND URINALS) AND FITTINGS (FAUCETS AND SHOWERHEADS) SHALL COMPLY WITH THE FOLLOWING:
5.303.3.1	WATER CLOSETS	THE EFFECTIVE FLUSH VOLUME OF ALL WATER CLOSETS SHALL NOT EXCEED 1.28 GALLONS PER FLUSH. TANK-TYPE WATER CLOSETS SHALL BE CERTIFIED TO THE PERFORMANCE CRITERIA OF THE U.S. EPA WATERSENSE SPECIFICATIONS FOR TANK-TYPE TOILETS. THE EFFECTIVE FLUSH VOLUME OF DIAL FLUSH TOILETS IS DEFINED AS THE COMPOSITE, AVERAGE FLUSH VOLUME OF TWO REDUCED FLUSHES AND ONE FULL FLUSH.
5.303.3.2	URINALS	THE EFFECTIVE FLUSH VOLUME OF URINALS SHALL NOT EXCEED 0.5 GALLONS PER FLUSH.
5.303.4	WASTEWATER REDUCTION	(N) EACH BUILDING SHALL REDUCE THE GENERATION BY THE INSTALLATION OF WATER-CONSERVING FIXTURES.
5.303.6	STANDARDS FOR PLUMBING FIXTURES AND FITTINGS	PLUMBING FIXTURES AND FITTINGS SHALL BE INSTALLED IN ACCORDANCE WITH THE CALIFORNIA PLUMBING CODE, AND SHALL MEET THE APPLICABLE STANDARDS REFERENCED IN TABLE 1401.1 OF THE CALIFORNIA PLUMBING CODE AND IN CHAPTER 6 OF THIS CODE.
OUTDOOR WATER USE		
5.304.1	WATER BUDGET	A WATER BUDGET SHALL BE DEVELOPED FOR LANDSCAPE IRRIGATION USE.
5.304.3	IRRIGATION DESIGN	IN NEW NON-RESIDENTIAL PROJECTS WITH AT LEAST 1,000 SQUARE FEET BUT NOT MORE THAN 2,400 SQUARE FEET OF LANDSCAPED AREA (THE LEVEL AT WHICH THE MLO APPLIES), INSTALL IRRIGATION CONTROLLERS AND SENSORS WHICH INCLUDE THE FOLLOWING CRITERIA AND MEET MANUFACTURER'S RECOMMENDATIONS.
5.304.3.1	IRRIGATION CONTROLLERS	AUTOMATIC IRRIGATION SYSTEM CONTROLLERS INSTALLED AT THE TIME OF FINAL INSPECTION SHALL COMPLY WITH THE FOLLOWING: 1. WEATHER-BASED CONTROLLERS WITHOUT INTEGRAL RAIN SENSORS OR COMMUNICATION SYSTEMS THAT ACCOUNT FOR LOCAL RAINFALL SHALL HAVE A SEPARATE WIRED OR WIRELESS RAIN SENSOR WHICH CONNECTS OR COMMUNICATES WITH THE CONTROLLERS(S). SOIL MOISTURE-BASED CONTROLLERS ARE NOT REQUIRED TO HAVE RAIN SENSOR INPUT.
A5.304.6	RESTORATION OF AREAS DISTURBED BY CONSTRUCTION	RESTORE ALL AREAS DISTURBED DURING CONSTRUCTION BY PLANTING WITH LOCAL NATIVE AND/OR NONINVASIVE VEGETATION.
WEATHER RESISTANCE AND MOISTURE MANAGEMENT		
5.407.1	WEATHER PROTECTION	PROVIDE A WEATHER-RESISTANT EXTERIOR WALL AND FOUNDATION ENVELOPE AS REQUIRED BY CALIFORNIA BUILDING CODE. SECTION 1403.2 AND CALIFORNIA ENERGY CODE. SECTION 150, MANUFACTURER'S INSTALLATION INSTRUCTIONS OR LOCAL ORDINANCE, WHICHEVER IS MORE STRINGENT.
5.407.2	MOISTURE CONTROL	EMPLOY MOISTURE CONTROL MEASURES BY THE FOLLOWING METHODS:
5.407.2.1	SPRINKLERS	PREVENT IRRIGATION SPRAY ON STRUCTURES.
5.407.2.2	ENTRIES AND OPENINGS	DESIGN EXTERIOR ENTRIES AND OPENINGS TO PREVENT WATER INTRUSION INTO BUILDINGS.
CONSTRUCTION WASTE REDUCTION, DISPOSAL AND RECYCLING		
5.408.1	CONSTRUCTION WASTE MANAGEMENT	RECYCLE AND / OR SALVAGE FOR REUSE A MINIMUM OF 50% OF THE NON-HAZARDOUS CONSTRUCTION WASTE IN ACCORDANCE WITH SECTION 5.408.1.1, 5.408.1.2 OR 5.408.1.3; OR MEET A LOCAL CONSTRUCTION AND DEMOLITION WASTE MANAGEMENT ORDINANCE, WHICHEVER IS MORE STRINGENT.
5.408.1.2	WASTE MANAGEMENT COMPANY	UTILIZE A WASTE MANAGEMENT COMPANY THAT CAN PROVIDE VERIFIABLE DOCUMENTATION THAT THE PERCENTAGE OF CONSTRUCTION WASTE MATERIAL DIVERTED FROM THE LANDFILL COMPLIES WITH THIS SECTION.
5.408.1.4	DOCUMENTATION	PROVIDE DOCUMENTATION OF THE WASTE MANAGEMENT PLAN THAT MEETS THE REQUIREMENTS LISTED IN SECTIONS 5.408.1.1 THROUGH 5.408.1.3, AND THE PLAN IS ACCESSIBLE TO THE ENFORCEMENT AUTHORITY.
5.408.3	EXCAVATED SOIL AND LAND CLEARING DEBRIS	100 PERCENT OF TREES, STUMPS, ROCKS AND ASSOCIATED VEGETATION AND SOILS RESULTING PRIMARILY FROM LAND CLEARING SHALL BE REUSED OR RECYCLED.
BUILDING MAINTENANCE AND OPERATION		
5.410.1	RECYCLING BY OCCUPANTS	PROVIDE READILY ACCESSIBLE AREAS THAT SERVE THE ENTIRE BUILDING AND ARE IDENTIFIED FOR THE DEPOSITING, STORAGE AND COLLECTION OF NON-HAZARDOUS MATERIALS FOR RECYCLING.
5.410.1.1	ADDITIONAS	ALL ADDITIONS CONDUCTED WITHIN A 12-MONTH PERIOD UNDER SINGLE OR MULTIPLE PERMITS, RESULTING IN AN INCREASE OF 30 PERCENT OR MORE IN FLOOR AREA, SHALL PROVIDE RECYCLING AREAS ON SITE.
5.410.4	TESTING AND ADJUSTING	TESTING AND ADJUSTING OF SYSTEMS SHALL BE REQUIRED FOR BUILDINGS LESS THAN 10,000 SQUARE FEET. APPLIES TO NEW SYSTEMS SERVING ADDITIONS OR ALTERATIONS.
5.410.4.2	SYSTEMS	DEVELOP A WRITTEN PLAN OF PROCEDURES FOR TESTING AND ADJUSTING SYSTEMS. SYSTEMS TO BE INCLUDED FOR TESTING AND ADJUSTING SHALL INCLUDE, AS APPLICABLE TO THE PROJECT, THE SYSTEMS LISTED IN SECTION 5.410.4.2.
5.410.4.3	PROCEDURES	PERFORM TESTING AND ADJUSTING PROCEDURES IN ACCORDANCE WITH APPLICABLE STANDARDS ON EACH SYSTEM AS DETERMINED BY THE ENFORCING AGENCY.
5.410.4.3.1	HVAC BALANCING	BEFORE A NEW SPACE-CONDITIONING SYSTEM SERVING A BUILDING OR SPACE IS OPERATED FOR NORMAL USE, BALANCE IN ACCORDANCE WITH THE PROCEDURES DEFINED BY NATIONAL STANDARDS LISTED IN SECTION 410.4.3.1 OR AS APPROVED BY THE ENFORCING AGENCY.
5.410.4.4	REPORTING	AFTER COMPLETION OF TESTING, ADJUSTING AND BALANCING, PROVIDE A FINAL REPORT OF TESTING SIGNED BY THE INDIVIDUAL RESPONSIBLE FOR PERFORMING THESE SERVICES.
5.410.4.5	OPERATION AND MAINTENANCE MANUAL	PROVIDE THE BUILDING OWNER WITH DETAILED OPERATING AND MAINTENANCE INSTRUCTIONS AND COPIES OF GUARANTIES / WARRANTIES FOR EACH SYSTEM PRIOR TO FINAL INSPECTION.
5.410.4.5.1	INSPECTIONS AND REPORTS	INCLUDE A COPY OF ALL INSPECTION VERIFICATIONS AND REPORTS REQUIRED BY THE ENFORCING AGENCY.

SECTION	CATEGORY	DESCRIPTION
POLLUTANT CONTROL		
A5.504.1	INDOOR AIR QUALITY DURING CONSTRUCTION	MAINTAIN IAQ AD PROVIDED IN SECTIONS A5.504.1.1 AND A5.504.1.2
5.504.1.3	TEMPORARY VENTILATION	IF THE HVAC SYSTEM IS USED DURING CONSTRUCTION, USE RETURN AIR FILTERS WITH A MERV OF 8, BASED ON ASHRAE 52.2-1999, OR AN AVERAGE EFFICIENCY OF 30% BASED ON ASHRAE 52.1-1992. REPLACE ALL FILTERS IMMEDIATELY PRIOR TO OCCUPANCY. APPLIES TO ADDITIONS OR ALTERATIONS.
5.504.3	COVERING OF DUCT OPENINGS AND PROTECTION OF MECHANICAL EQUIPMENT DURING CONSTRUCTION	AT THE TIME OF ROUGH INSTALLATION AND DURING STORAGE ON THE CONSTRUCTION SITE AND UNTIL FINAL STARTUP OF THE HEATING, COOLING AND VENTILATING EQUIPMENT, ALL DUCT AND OTHER RELATED AIR DISTRIBUTION COMPONENT OPENINGS SHALL BE COVERED WITH TAPE, PLASTIC, SHEET METAL OR OTHER METHODS ACCEPTABLE TO THE ENFORCING AGENCY TO REDUCE THE AMOUNT OF DUST, WATER AND DEBRIS WHICH MAY ENTER THE SYSTEM.
5.504.4	FINISH MATERIAL POLLUTANT CONTROL	FINISH MATERIALS SHALL COMPLY WITH SECTIONS 5.504.4.1 THROUGH 5.504.4.4.
5.504.4.1	ADHESIVES, SEALANTS, CAULKS	ADHESIVES AND SEALANTS USED ON THE PROJECT SHALL MEET THE REQUIREMENTS OF THE FOLLOWING STANDARDS. 1. ADHESIVES, ADHESIVE BONDING PRIMERS, ADHESIVE PRIMERS, SEALANTS, SEALANT PRIMERS AND CAULKS SHALL COMPLY WITH LOCAL OR REGIONAL AIR POLLUTION CONTROL OR AIR QUALITY MANAGEMENT DISTRICT RULES WHERE APPLICABLE OR SCAQMD RULE 1168 VOC LIMITS, AS SHOWN IN TABLES 5.504.4.1 AND 5.504.4.2. 2. AEROSOL ADHESIVES AND SMALLER UNIT SIZES OF ADHESIVES AND SEALANT OR CAULKING COMPOUNDS (IN UNITS OF PRODUCT, LESS PACKAGING, WHICH DO NOT WEIGH MORE THAN ONE POUND AND DO NOT CONSIST OF MORE THAN 16 FLUID OUNCES) SHALL COMPLY WITH STATEWIDE VOC STANDARDS AND OTHER REQUIREMENTS, INCLUDING PROHIBITIONS ON USE OF CERTAIN TOXIC COMPOUNDS, OF CALIFORNIA CODE OR REGULATIONS, TITLE 17, COMMENCING WITH SECTION 94507.
5.504.4.3	PAINTS AND COATINGS	ARCHITECTURAL PAINTS AND COATINGS SHALL COMPLY WITH TABLE 5.504.4.3 UNLESS MORE STRINGENT LOCAL LIMITS APPLY.
5.504.4.3.1	AEROSOL PAINTS AND COATINGS	AEROSOL PAINTS AND COATINGS SHALL MEET THE PRODUCT - WEIGHTED MIR LIMITS FOR ROC IN SECTIONS 94522(A)(3) AND OTHER REQUIREMENTS, INCLUDING PROHIBITIONS ON USE OF CERTAIN TOXIC COMPOUNDS AND OZONE DEPLETING SUBSTANCES (CCR, TITLE 17, SECTION 94520, ET SEQ.).
5.504.4.3.2	VERIFICATION	VERIFICATION ON COMPLIANCE WITH THIS SECTION SHALL BE PROVIDED AT THE REQUEST OF THE ENFORCING AGENCY.
5.504.4.4	CARPET SYSTEMS	ALL CARPET INSTALLED IN THE BUILDING INTERIOR SHALL MEET THE TESTING AND PRODUCT REQUIREMENTS OF ONE OF THE STANDARDS LISTED IN SECTION 5.504.4.4.
5.504.4.4.1	CARPET CUSHION	ALL CARPET CUSHION INSTALLED IN THE BUILDING INTERIOR SHALL MEET THE REQUIREMENTS OF THE CARPET AND RUG INSTITUTE'S GREEN LABEL PROGRAM.
5.504.4.4.2	CARPET ADHESIVE	ALL CARPET ADHESIVE SHALL MEET THE REQUIREMENTS OF TABLE 5.504.4.1.
5.504.4.5	COMPOSITE WOOD PRODUCTS	HARDWOOD PLYWOOD, PARTICLEBOARD AND MEDIUM DENSITY FIBERBOARD COMPOSITE WOOD PRODUCTS USED ON THE INTERIOR OR EXTERIOR OF THE BUILDING SHALL MEET THE REQUIREMENTS FOR FORMALDEHYDE AS SPECIFIED IN TABLE 5.504.4.5.
5.504.4.5.3	DOCUMENTATION	VERIFICATION OF COMPLIANCE WITH THIS SECTION SHALL BE PROVIDED AS REQUESTED BY THE ENFORCING AGENCY. DOCUMENTATION SHALL INCLUDE AT LEAST ONE OF THE FOLLOWING: 1. PRODUCT CERTIFICATIONS AND SPECIFICATIONS. 2. CHAIN OF CUSTODY CERTIFICATIONS. 3. PRODUCT LABELED AND INVOICED AS MEETING THE COMPOSITE WOOD PRODUCTIONS REGULATION (SEE CCR, TITLE 17, SECTIONS 93120, ET SEQ.). 4. EXTERIOR GRADE PRODUCTS MARKED AS MEETING THE PSO-1 OR PS-2 STANDARDS OF THE ENGINEERED WOOD ASSOCIATION, THE AUSTRALIAN AS/NZS 2269 OR EUROPEAN 636 3S STANDARDS. 5. OTHER METHODS ACCEPTABLE TO THE ENFORCING AGENCY.
5.504.4.6	RESILIENT FLOORING SYSTEMS	COMPLY WITH THE VOC-EMISSION LIMITS DEFINED IN THE 2012 CHPS CRITERIA AND LISTED ON ITS HIGH PERFORMANCE PRODUCTS DATABASE; PRODUCTS COMPLIANT WITH CHPS CRITERIA CERTIFIED UNDER THE GREENGUARD CHILDREN AND SCHOOLS PROGRAM; CERTIFIED UNDER THE FLOORSCORE PROGRAM OF THE RESILIENT FLOOR COVERING INSTITUTE; OR MEET CALIFORNIA DEPARTMENT OF PUBLIC HEALTH 2010 SPECIFICATION.
A5.504.4.6.1	VERIFICATION OF COMPLIANCE	DOCUMENTATION SHALL BE PROVIDED VERIFYING THAT RESILIENT FLOORING MATERIALS MEET THE POLLUTANT EMISSION LIMITS.
5.504.5.3	FILTERS	IN MECHANICALLY VENTILATED BUILDINGS, PROVIDE REGULARLY OCCUPIED AREAS OF THE BUILDING WITH AIR FILTRATION MEDIA FOR OUTSIDE AND RETURN AIR THAT PROVIDES AT LEAST A MERV OF 8. MERV 8 FILTERS SHALL BE INSTALLED PRIOR TO OCCUPANCY, AND RECOMMENDATIONS FOR MAINTENANCE WITH FILTERS OF THE SAME VALUE SHALL BE INCLUDED IN THE OPERATION AND MAINTENANCE MANUAL.
5.504.7	ENVIRONMENTAL TOBACCO SMOKE (ETS) CONTROL	PROHIBIT SMOKING WITHIN 25 FEET OF BUILDING ENTRIES, OUTDOOR AIR INTAKES AND OPERABLE WINDOWS WHERE OUTDOOR AREAS AREA PROVIDED FOR SMOKING AND WITHIN THE BUILDING AS ALREADY PROHIBITED BY OTHER LAWS OR REGULATIONS; OR AS ENFORCED BY ORDINANCES, REGULATIONS OR POLICIES OF ANY CITY OR COUNTY.
INDOOR MOISTURE AND RADON CONTROL		
5.505.1	INDOOR MOISTURE CONTROL	BUILDINGS SHALL MEET OR EXCEED THE PROVISIONS OF CALIFORNIA BUILDING CODE, CCR, TITLE 24, PART 2, SECTIONS 1203 AND CHAPTER 14.1
AIR QUALITY AND EXHAUST		
5.506.1	OUTSIDE AIR DELIVERY	FOR MECHANICALLY OR NATURALLY VENTILATED SPACES IN BUILDINGS, MEET THE MINIMUM REQUIREMENTS OF SECTION 121 OF THE CALIFORNIA ENERGY CODE AND CHAPTER 4 OF CCR, TITLE 8 OR THE APPLICABLE LOCAL CODE, WHICHEVER IS MORE STRINGENT.
5.506.2	CARBON DIOXIDE (CO_2) MONITORING	FOR BUILDINGS OR ADDITIONS EQUIPPED WITH DEMAND CONTROL VENTILATION, CO_2 SENSORS AND VENTILATION CONTROLS SHALL BE SPECIFIED AND INSTALLED IN ACCORDANCE WITH THE REQUIREMENTS OF THE CALIFORNIA ENERGY CODE, CCR, SECTION 120(C)(4).
OUTDOOR AIR QUALITY		
5.508.1	OZONE DEPLETION AND GLOBAL WARMING REDUCTIONS	INSTALLATIONS OF HVAC, REFRIGERATION AND FIRE SUPPRESSION EQUIPMENT SHALL COMPLY WITH SECTIONS 5.508.1.1 AND 5.508.1.2.
5.508.1.1	CFCS	INSTALL HVAC AND REFRIGERATION EQUIPMENT THAT DOES NOT CONTAIN CFCS.
5.508.1.2	HALONS	INSTALL FIRE SUPPRESSION EQUIPMENT THAT DOES NOT CONTAIN HALONS.

NO.	BY	CHK	APP	DATE	REVISIONS AND RECORD OF USE

LICENSED ARCHITECT
BRUCE DOUGLAS FRASER
C 9787
STATE OF CALIFORNIA

FRASER SEIPLE ARCHITECTS

JOINT VENTURE

BLACK & VEATCH

FILANC

CITY OF MORRO BAY
MORRO BAY WATER
WATER RECLAMATION FACILITY (WRF)

ARCHITECTURAL
OPERATIONS BUILDING
ENERGY CODE COMPLIANCE

DESIGNED: BDF
DETAILED: SS
CHECKED:
APPROVED:
DATE:

0 1/2 1

IF THIS BAR DOES NOT MEASURE 1" THEN DRAWING IS NOT TO FULL SCALE

PROJECT NO.
400530

95-A-003
SHEET
OF

PLOTTED: 3/30/2020 12:10 PM

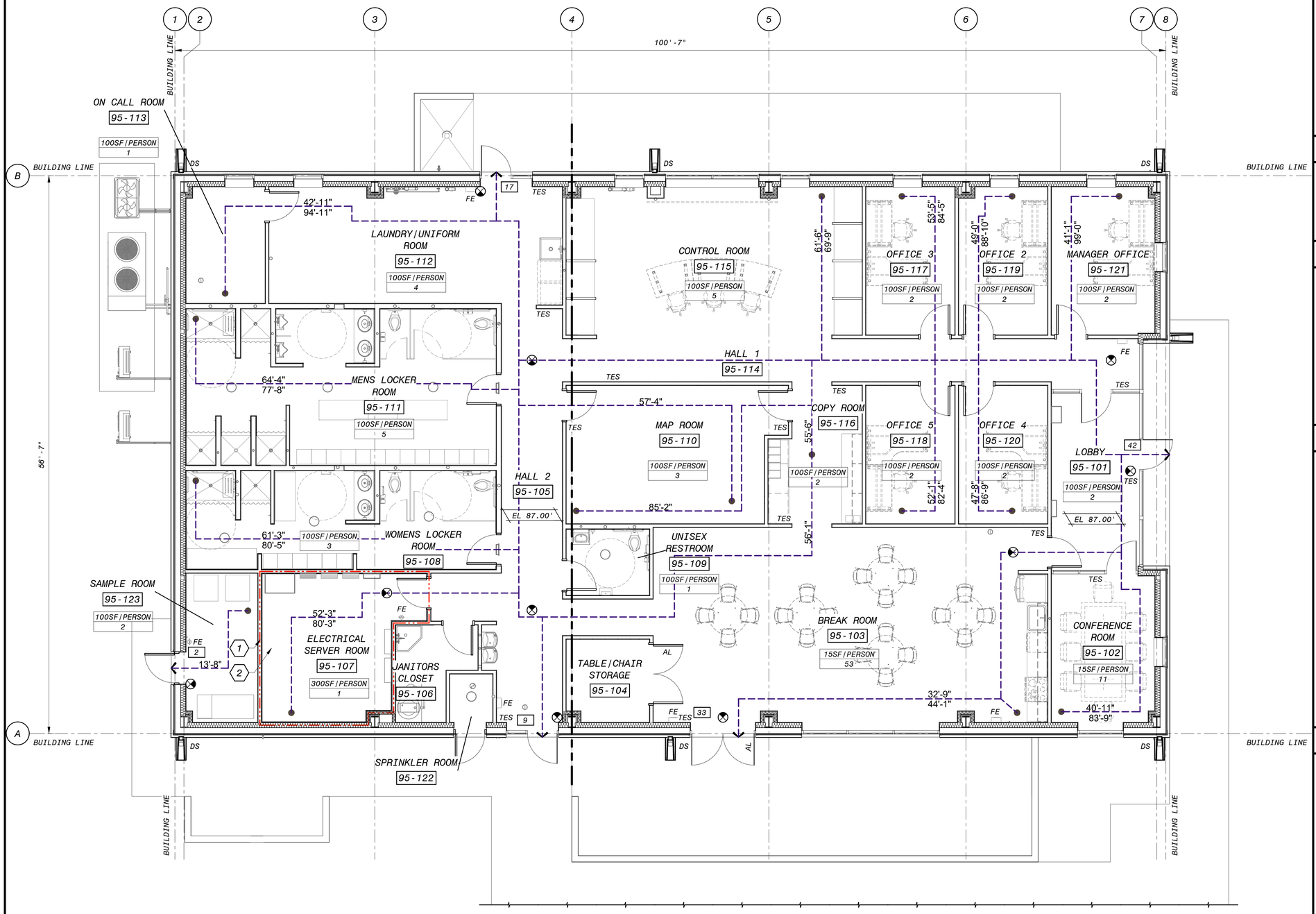

OPERATING FLOOR - LIFE SAFETY PLAN

3/16" = 1'-0"

GENERAL SHEET NOTES

1. BUILDING CONSTRUCTION TYPE IS V-B OCCUPANCY IS B (OFFICE)
2. WALLS CEILINGS AND ROOFS NOT OTHERWISE IDENTIFIED ARE NOT FIRE RATED

SHEET KEYNOTES

1. 2 HOUR VERTICAL FIRE BARRIER
2. 2 HOUR HORIZONTAL FIRE BARRIER

LIFE SAFETY LEGEND

	FIRE EXTINGUISHER (FE)
X'-X" / X'-X"	COMMON PATH OF TRAVEL / PATH OF EGRESS TRAVEL
100SF/PERSON / 10	OCCUPANTS PER SF / OCCUPANT LOAD
1	CUMULATIVE OCCUPANT LOAD AT EXIT
	EXIT SYMBOL
TES	TACTILE EXIT SIGN
	2 HOUR FIRE BARRIER
AL	ACTIVE LEAF
DS	DOWNSPOUT

BUILDING CODE ANALYSIS

OPERATIONS BUILDING	
APPLICABLE BUILDING CODES: 2016 CALIFORNIA BUILDING STANDARDS CODE	
OCCUPANCY	B
ACTUAL FLOOR AREA	5,825 SF TOTAL
ACTUAL HEIGHT	1 STORY (20.33 FT)
TYPE OF CONSTRUCTION	TYPE V-B
ALLOWABLE HEIGHT	2 STORIES (55 FT)
ALLOWABLE AREA	36,000 SF
DESIGN OCCUPANT LOAD	103 PERSONS
ADA ACCESSIBILITY	YES
OCCUPANCY SEPARATION	NOT REQUIRED
FIRE SPRINKLERS	YES

6" 4' 2' 0' 5' 10'

3/16" = 1'-0"

90% SUBMITTAL - NOT FOR CONSTRUCTION

NO.	BY	CHK	APP
B	EVB	BDF	EVB

60% SUBMITTAL — REVISIONS AND RECORD OF USE — 7/30/2019 — DATE

LICENSED ARCHITECT — BRUCE DOUGLAS FRASER — C 9787 — STATE OF CALIFORNIA

FRASER SEMPLE ARCHITECTS — BLACK & VEATCH — JOINT VENTURE — FILANC

CITY OF MORRO BAY
MORRO BAY WATER RECLAMATION FACILITY (WRF)

OPERATIONS BUILDING ARCHITECTURAL
OPERATING FLOOR - LIFE SAFETY PLAN

DESIGNED: BDF
DETAILED: ANH
CHECKED: -
APPROVED: -
DATE:

0 1/2 1
IF THIS BAR DOES NOT MEASURE 1" THEN DRAWING IS NOT TO FULL SCALE

PROJECT NO. 400530

95-A-101
SHEET OF

PLOTTED: 3/16/2020 11:04:44 AM
D400530

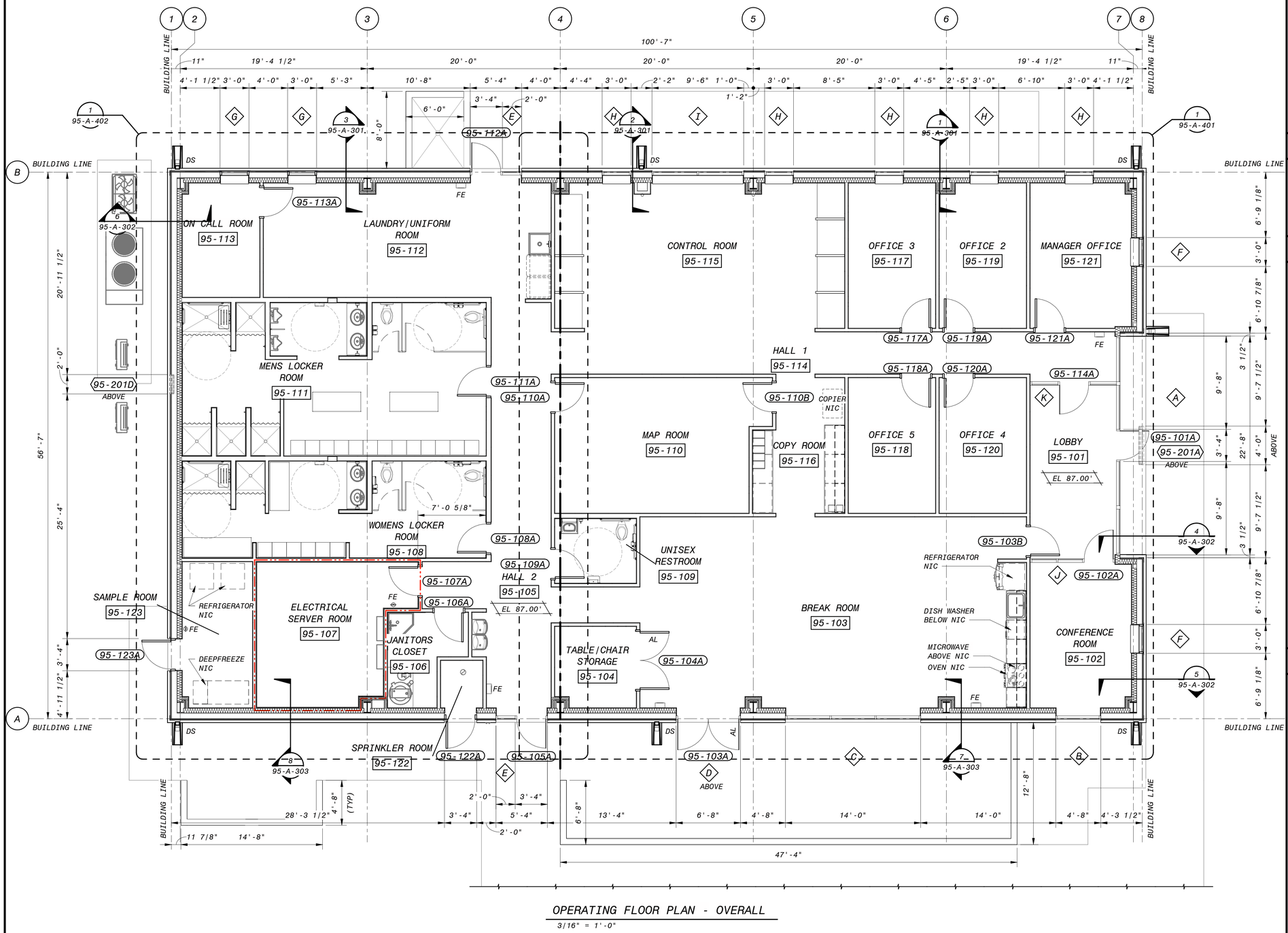

OPERATING FLOOR PLAN - OVERALL

3/16" = 1'-0"

GENERAL SHEET NOTES

SHEET KEYNOTES

LEGEND

X	ACCESSORY ITEM
101A	DOOR
H1	ACCESS HATCH
00	LABORATORY CABINET
101A	LOUVER
A	WALL or WALL PANEL TYPE
W	WINDOW
WS	WINDOW SYSTEM or FRAME TYPE
ROOM NAME 101	ROOM NAME & NUMBER

3/16" = 1'-0"

90% SUBMITTAL - NOT FOR CONSTRUCTION

NO.	BY	CHK	APP	DATE	REVISIONS AND RECORD OF USE
B	EVB	BDF	EVB	7/30/2019	60% SUBMITTAL
A	EVB	BDF	EVB	3/5/2019	30% SUBMITTAL

LICENSED ARCHITECT BRUCE DOUGLAS FRASER C 9787 STATE OF CALIFORNIA

FRASER SEIPLE ARCHITECTS

JOINT VENTURE

BLACK & VEATCH

FILANC

CITY OF MORRO BAY
MORRO BAY WATER RECLAMATION FACILITY (WRF)

OPERATIONS BUILDING
ARCHITECTURAL
OPERATING FLOOR PLAN

DESIGNED: BDF
DETAILED: ANH
CHECKED: -
APPROVED: -
DATE:

0 1/2 1

IF THIS BAR DOES NOT MEASURE 1" THEN DRAWING IS NOT TO FULL SCALE

PROJECT NO. 400530

95-A-102
SHEET OF

PLOTTED: 3/16/2020 11:04:49 AM
D400530

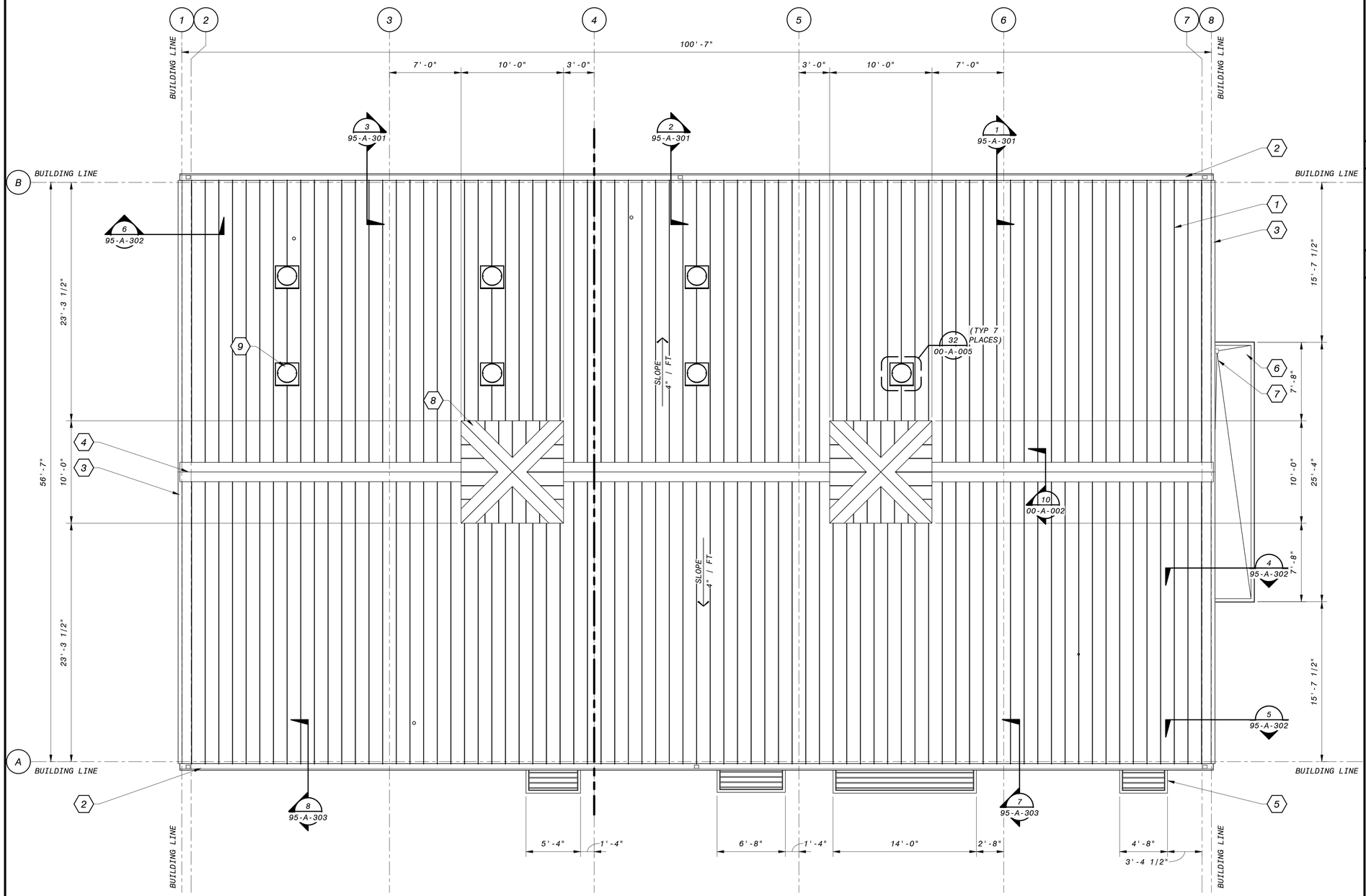

ROOF PLAN
3/16" = 1'-0"

6" 4' 2' 0' 5' 10'
3/16" = 1'-0"

90% SUBMITTAL - NOT FOR CONSTRUCTION

GENERAL SHEET NOTES

SHEET KEYNOTES

1. PRE-FINISHED METAL ROOFING PANELS
2. PRE-FINISHED METAL FASCIA GUTTER
3. PRE-FINISHED METAL RAKE TRIM
4. PRE-FINISHED METAL RIDGE CAP
5. CANTILEVERED METAL SUNSHADE
6. SINGLE-PLY ROOFING OVER TAPERED INSULATION AT CANTILEVERED ENTRY COVER
7. DECK DRAIN TO DOWNSPOUT
8. VENTILATION CUPOLA
9. DUCTED SKYLIGHT DOME

NO.	BY	CHK	APP
B	EVB	BDF	EVB

60% SUBMITTAL — REVISIONS AND RECORD OF USE — 7/30/2019 — DATE

LICENSED ARCHITECT
BRUCE DOUGLAS FRASER
C 9787
STATE OF CALIFORNIA

FRASER SEMPLE ARCHITECTS
JOINT VENTURE
BLACK & VEATCH
FILANC

CITY OF MORRO BAY
MORRO BAY WATER
RECLAMATION FACILITY (WRF)

OPERATIONS BUILDING
ARCHITECTURAL
ROOF PLAN

DESIGNED: BDF
DETAILED: ANH
CHECKED: -
APPROVED: -
DATE:

0 1/2 1
IF THIS BAR DOES NOT MEASURE 1" THEN DRAWING IS NOT TO FULL SCALE

PROJECT NO.
400530

95-A-103
SHEET
OF

PLOTTED: 3/16/2020 11:04:50 AM
D400530

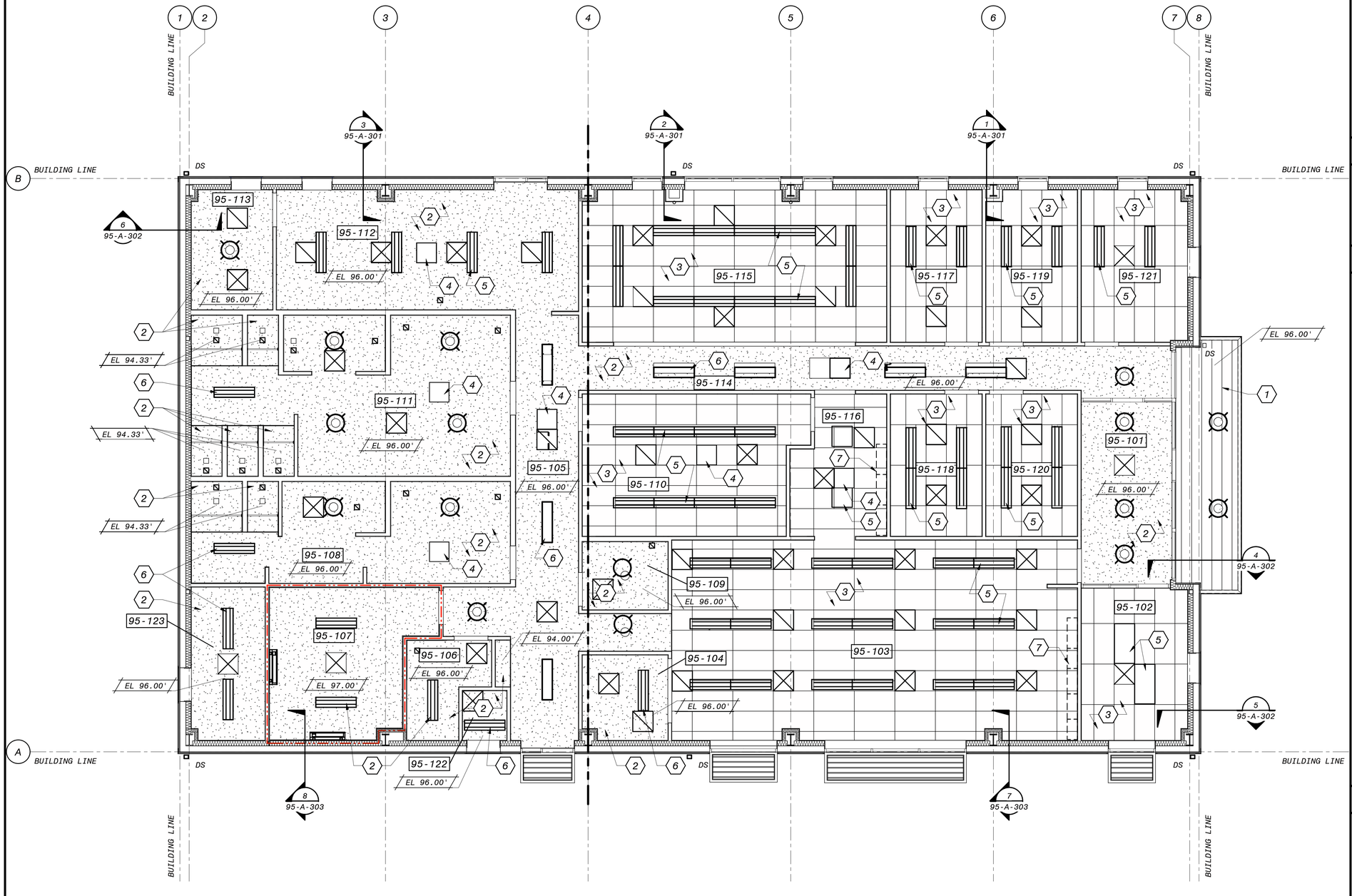

REFLECTED CEILING PLAN

3/16" = 1'-0"

GENERAL SHEET NOTES

SHEET KEYNOTES

1. PRE-FINISHED METAL SOFFIT PANEL
2. PAINTED GYPSUM CEILING
3. SUSPENDED ACOUSTICAL PANEL CEILING
4. DIFFUSER FOR DUCTED SKYLIGHT
5. RECESSED LIGHT FIXTURE
6. SURFACE LIGHT FIXTURE
7. UPPER WALL CABINET

CEILING PLAN LEGEND

LIGHT FIXTURES

EXHAUST DIFFUSER OR RETURN DIFFUSER

SUPPLY DIFFUSER

6" 4' 2' 0' 5' 10'

3/16" = 1'-0"

90% SUBMITTAL - NOT FOR CONSTRUCTION

NO.	BY	CHK	APP
B	EVB	BDF	EVB

7/30/2019 DATE

60% SUBMITTAL

REVISIONS AND RECORD OF USE

LICENSED ARCHITECT
BRUCE DOUGLAS FRASER
C 9787
REGISTERED
STATE OF CALIFORNIA

FRASER SEMPLE ARCHITECTS

BLACK & VEATCH

JOINT VENTURE

FILANC

CITY OF MORRO BAY
MORRO BAY WATER
RECLAMATION FACILITY (WRF)

OPERATIONS BUILDING
ARCHITECTURAL
REFLECTED CEILING PLAN

DESIGNED: BDF
DETAILED: ANH
CHECKED: -
APPROVED: -
DATE:

0 1/2 1

IF THIS BAR DOES NOT MEASURE 1" THEN DRAWING IS NOT TO FULL SCALE

PROJECT NO.
400530

95-A-104
SHEET
OF

PLOTTED: 3/16/2020 11:04:54 AM
D400530

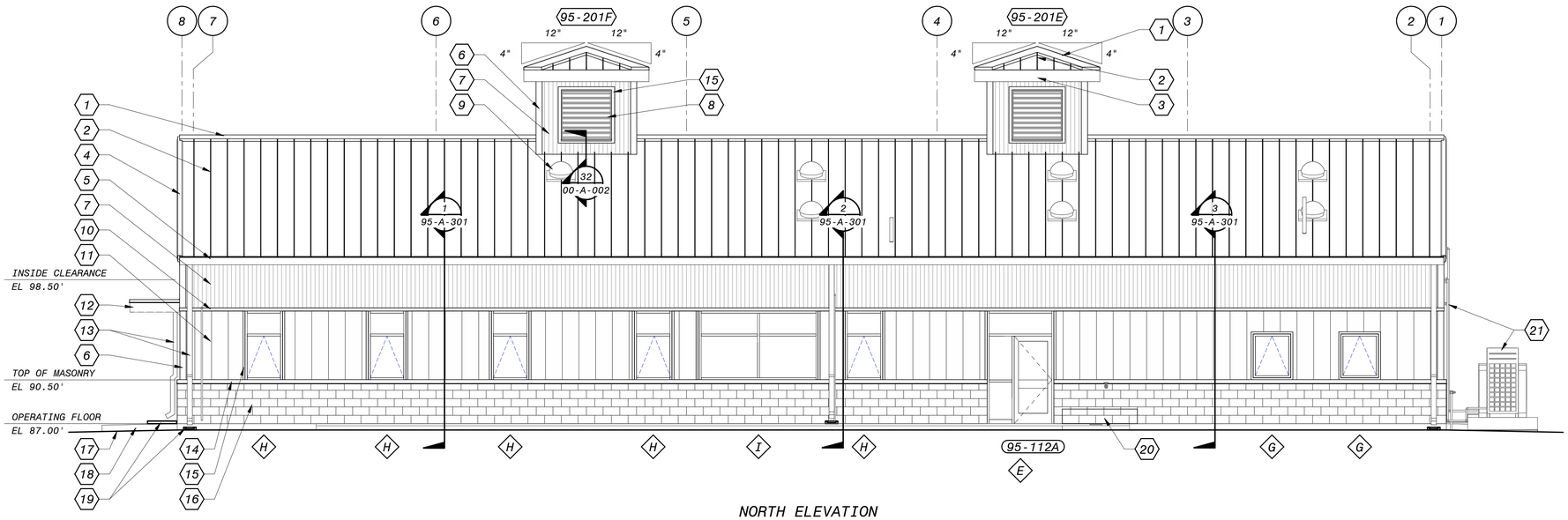

NORTH ELEVATION

3/16" = 1'-0"

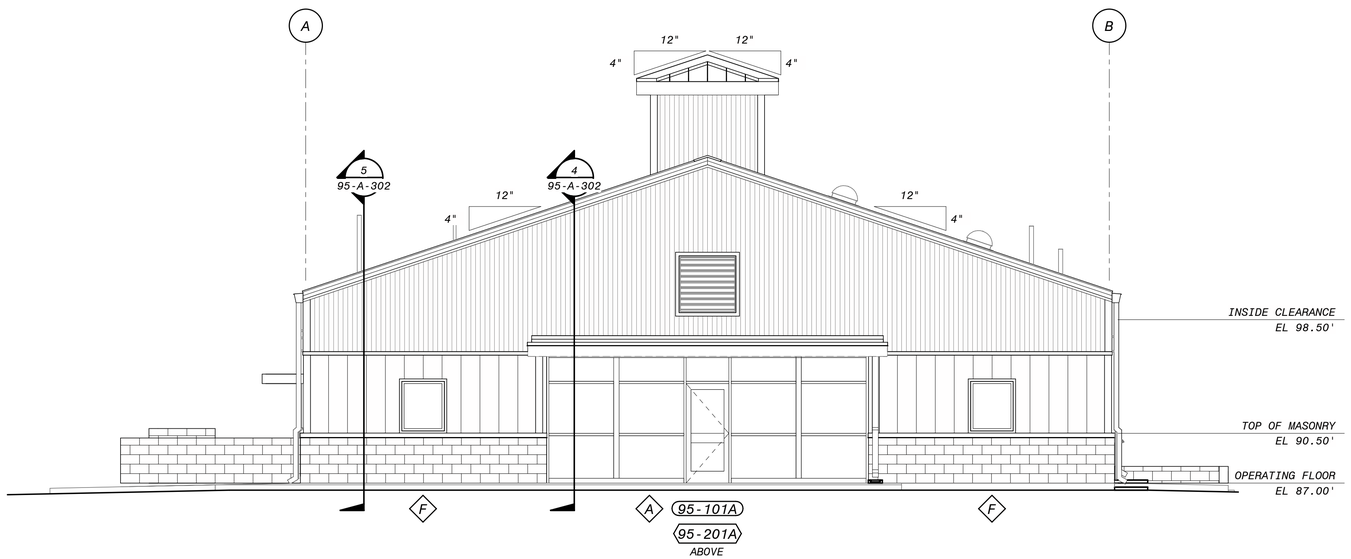

EAST ELEVATION

3/16" = 1'-0"

GENERAL SHEET NOTES

SHEET KEYNOTES

1. PRE-FINISHED METAL RIDGE CAP
2. PRE-FINISHED METAL ROOFING PANELS
3. PRE-FINISHED METAL FASCIA TRIM
4. PRE-FINISHED METAL RAKE TRIM
5. PRE-FINISHED METAL FASCIA GUTTER
6. PRE-FINISHED METAL CORNER TRIM
7. PRE-FINISHED RIBBED METAL SIDING
8. PRE-FINISHED METAL LOUVER - SEE LOUVER SCHEDULE (TYP)
9. ROOF DOME FOR DUCTED SKYLIGHT
10. PRE-FINISHED METAL TRANSITION TRIM
11. PRE-FINISHED METAL PANEL SIDING
12. CANTILEVERED ENTRY ROOF
13. PRE-FINISHED METAL DOWNSPOUT
14. PAINTED METAL FLASHING
15. PRE-FINISHED METAL TRIM
16. 8x8x16 BURNISHED CONCRETE BLOCK
17. FINISH GRADE
18. CONCRETE FLATWORK BEYOND
19. PRECAST CONCRETE SPLASH BLOCK
20. BURNISHED CONCRETE BLOCK WALL AT WASH DOWN BASIN
21. HVAC EQUIPMENT

6" 4' 2' 0' 5' 10'

3/16" = 1'-0"

90% SUBMITTAL - NOT FOR CONSTRUCTION

NO.	BY	CHK	APP
B	EVB	BDF	EVB

60% SUBMITTAL — REVISIONS AND RECORD OF USE

DATE: 7/30/2019

LICENSED ARCHITECT — BRUCE DOUGLAS FRASER — C 9787 — STATE OF CALIFORNIA

FRASER SEMPLE ARCHITECTS

JOINT VENTURE

BLACK & VEATCH

FILANC

CITY OF MORRO BAY
MORRO BAY WATER
RECLAMATION FACILITY (WRF)

OPERATIONS BUILDING
ARCHITECTURAL
BUILDING ELEVATIONS

DESIGNED: BDF
DETAILED: ANH
CHECKED: -
APPROVED: -
DATE:

0 1/2 1

IF THIS BAR DOES NOT MEASURE 1" THEN DRAWING IS NOT TO FULL SCALE

PROJECT NO.
400530

95-A-201
SHEET
OF

PLOTTED: 3/16/2020 11:04:59 AM
D400530

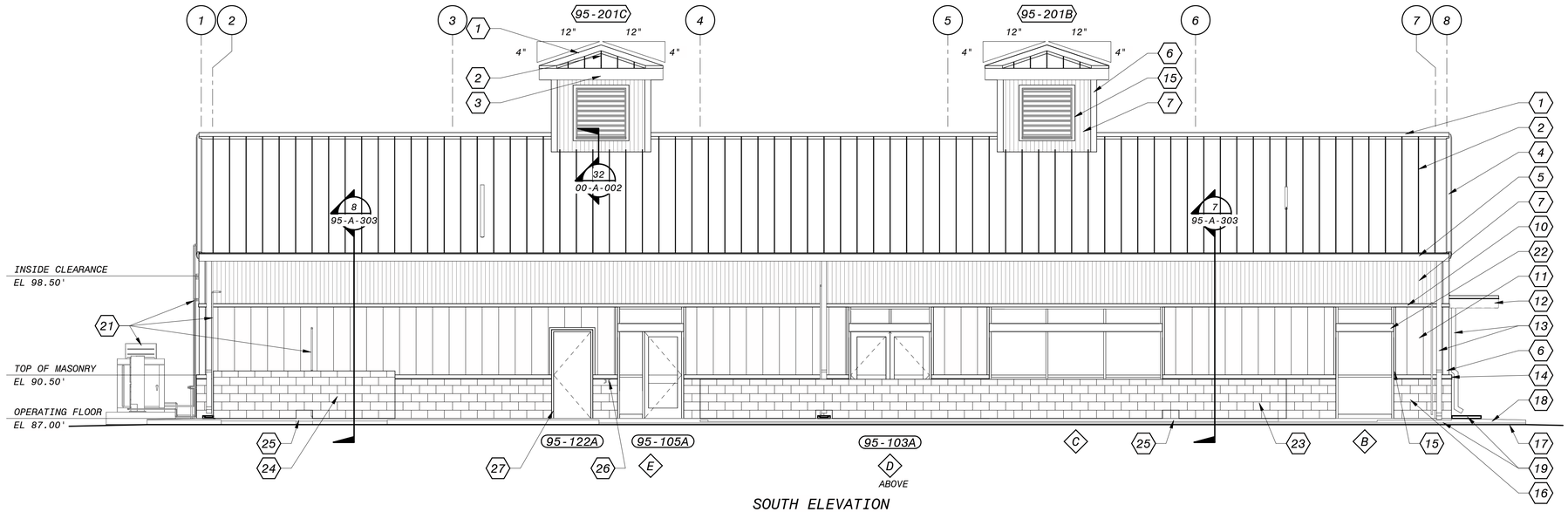

SOUTH ELEVATION

3/16" = 1'-0"

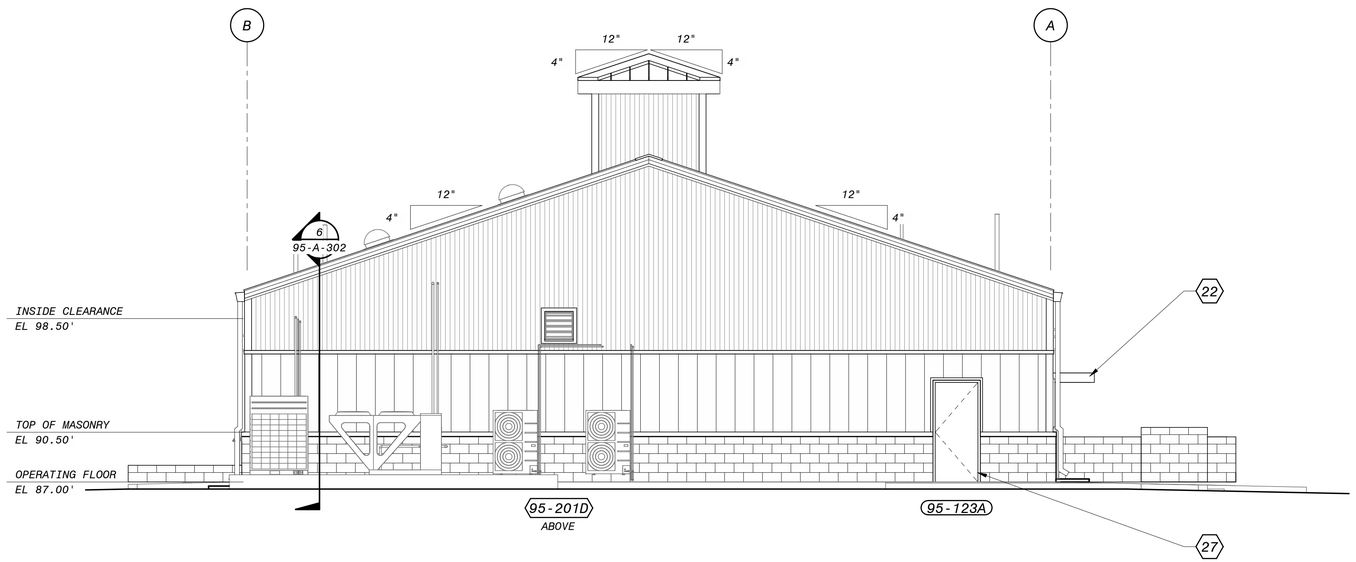

WEST ELEVATION

3/16" = 1'-0"

GENERAL SHEET NOTES

SHEET KEYNOTES

1. PRE-FINISHED METAL RIDGE CAP
2. PRE-FINISHED METAL ROOFING PANELS
3. PRE-FINISHED METAL FASCIA TRIM
4. PRE-FINISHED METAL RAKE TRIM
5. PRE-FINISHED METAL FASCIA GUTTER
6. PRE-FINISHED METAL CORNER TRIM
7. PRE-FINISHED RIBBED METAL SIDING
8. NOT USED
9. ROOF DOME FOR DUCTED SKYLIGHT
10. PRE-FINISHED METAL TRANSITION TRIM
11. PRE-FINISHED METAL PANEL SIDING
12. CANTILEVERED ENTRY ROOF
13. PRE-FINISHED METAL DOWNSPOUT
14. PAINTED METAL FLASHING
15. PRE-FINISHED METAL TRIM
16. 8x8x16 BURNISHED CONCRETE BLOCK
17. FINISH GRADE
18. CONCRETE FLATWORK BEYOND
19. PRECAST CONCRETE SPLASH BLOCK
20. BURNISHED CONCRETE BLOCK WALL AT WASH DOWN BASIN
21. HVAC EQUIPMENT
22. CANTILEVERED STOREFRONT SUN CONTROL DEVICE
23. 44" HIGH BURNISHED CONCRETE BLOCK SCREEN WALL AT PATIO
24. 52" HIGH BURNISHED CONCRETE BLOCK SCREEN WALL AT TRASH ENCLOSURE
25. SPACE FOR DRAINAGE
26. FIRE SPRINKLER HOOKUP
27. DOOR - SEE DOOR SCHEDULE (TYP)

6" 4' 2' 0' 5' 10'

3/16" = 1'-0"

90% SUBMITTAL - NOT FOR CONSTRUCTION

NO.	BY	CHK	APP
B	EVB	BDF	EVB

60% SUBMITTAL
REVISIONS AND RECORD OF USE
7/30/2019
DATE

LICENSED ARCHITECT
BRUCE DOUGLAS FRASER
C 9787
REGISTERED PROFESSIONAL
STATE OF CALIFORNIA

FRASER SEMPLE ARCHITECTS

JOINT VENTURE

BLACK & VEATCH

FILANC

CITY OF MORRO BAY
MORRO BAY WATER
RECLAMATION FACILITY (WRF)

OPERATIONS BUILDING
ARCHITECTURAL
BUILDING ELEVATIONS

DESIGNED: BDF
DETAILED: ANH
CHECKED: -
APPROVED: -
DATE:

0 1/2 1
IF THIS BAR DOES NOT MEASURE 1" THEN DRAWING IS NOT TO FULL SCALE

PROJECT NO.
400530

95-A-202
SHEET
OF

PLOTTED: 3/16/2020 11:05:06 AM
D400530

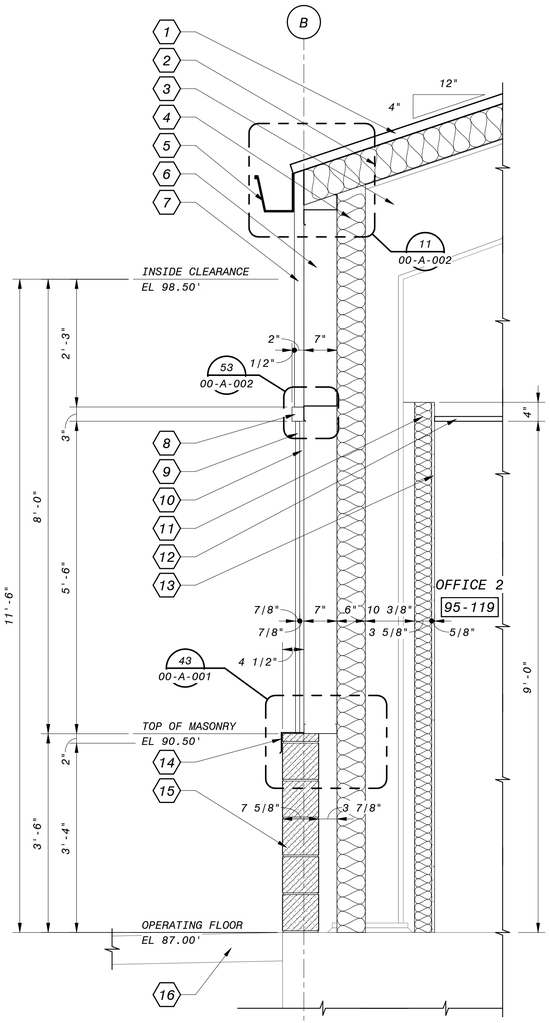

1 SECTION
95-A-102 3/4" = 1'-0"

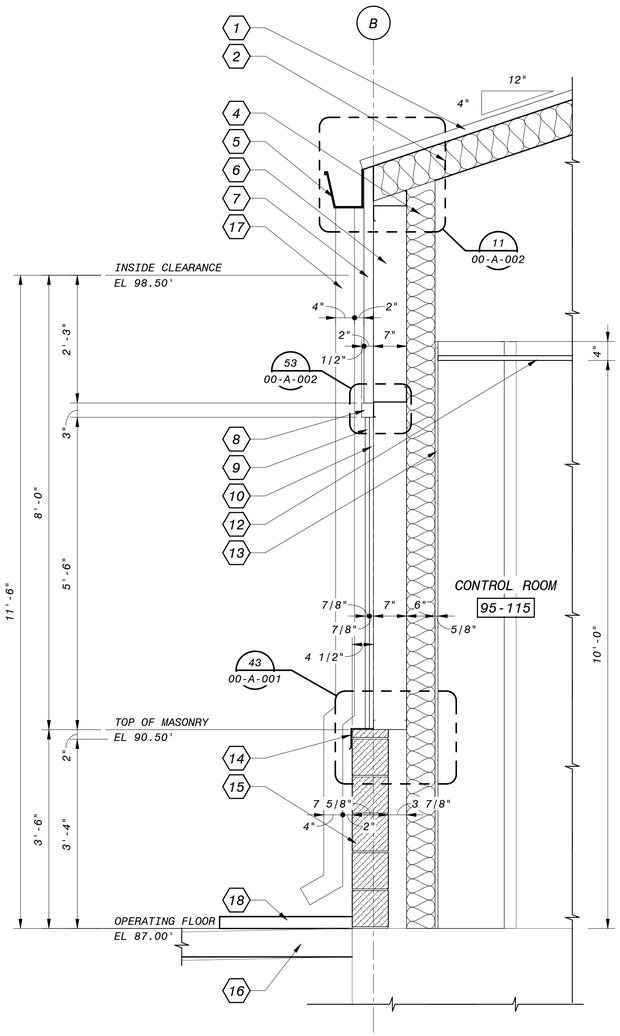

2 SECTION
95-A-102 3/4" = 1'-0"

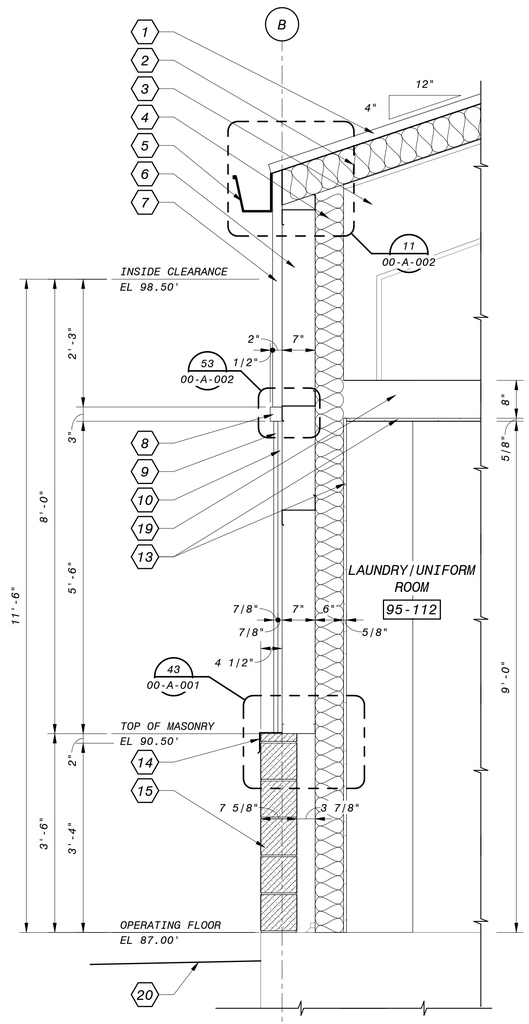

3 SECTION
95-A-102 3/4" = 1'-0"

GENERAL SHEET NOTES

1. FOR VERTICAL REINFORCING AND BOND BEAMS IN MASONRY DESIGN - SEE STRUCTURAL DRAWINGS
2. FOR HORIZONTAL JOINT REINFORCING - SEE SPECIFICATION SECTION 04200

SHEET KEYNOTES

1. METAL ROOFING PANELS
2. PURLIN SPACE WITH PINCH INSULATION
3. PRE-ENGINEERED FRAME PER METAL BUILDING MANUFACTURER
4. METAL STUD WALL WITH 5-1/2" BATT INSULATION
5. PRE-FINISHED FASCIA GUTTER
6. WALL GIRT SPACE
7. PRE-FINISHED RIBBED METAL SIDING
8. PRE-FINISHED METAL TRANSITION TRIM
9. PRE-FINISHED METAL FLAT PANEL SIDING
10. HORIZONTAL FURRING CHANNELS
11. METAL STUD WALL WRAPPING STRUCTURAL COLUMN WITH 3-1/2" BATT INSULATION
12. SUSPENDED ACOUSTIC TILE CEILING
13. 5/8" GYPSUM BOARD
14. PAINTED METAL "Z" FLASHING
15. BURNISHED 8x8x16 CONCRETE BLOCK
16. CONCRETE FLATWORK WHERE OCCURS
17. PRE-FINISHED METAL DOWNSPOUT
18. PRECAST CONCRETE SPLASH BLOCK
19. METAL C-JOIST CEILING FRAMING
20. FINISH GRADE

12" 6" 0' 1' 2' 3'
3/4" = 1'-0"

90% SUBMITTAL - NOT FOR CONSTRUCTION

NO.	BY	CHK	APP
B	EVB	BDF	EVB

DATE	REVISIONS AND RECORD OF USE
7/30/2019	60% SUBMITTAL

LICENSED ARCHITECT
BRUCE DOUGLAS FRASER
C 9787
REGISTERED PROFESSIONAL
STATE OF CALIFORNIA

FRASER SEMPLE ARCHITECTS
JOINT VENTURE
BLACK & VEATCH
FILANC

CITY OF MORRO BAY
MORRO BAY WATER
RECLAMATION FACILITY (WRF)

OPERATIONS BUILDING
ARCHITECTURAL
WALL SECTIONS

DESIGNED: BDF
DETAILED: ANH
CHECKED: -
APPROVED: -
DATE:

0 1/2 1
IF THIS BAR DOES NOT MEASURE 1" THEN DRAWING IS NOT TO FULL SCALE

PROJECT NO.
400530

95-A-301
SHEET
OF

PLOTTED: 3/16/2020 11:05:08 AM
D400530

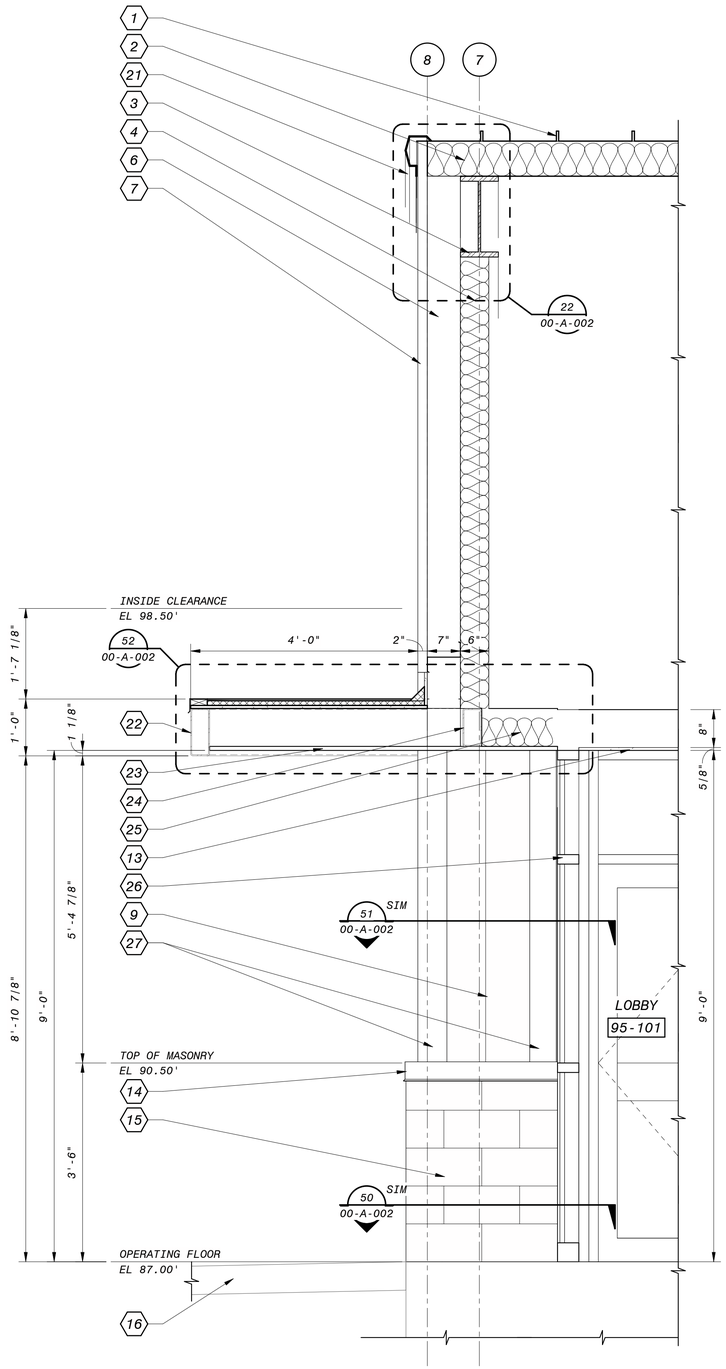

4 SECTION
95-A-102 3/4" = 1'-0"

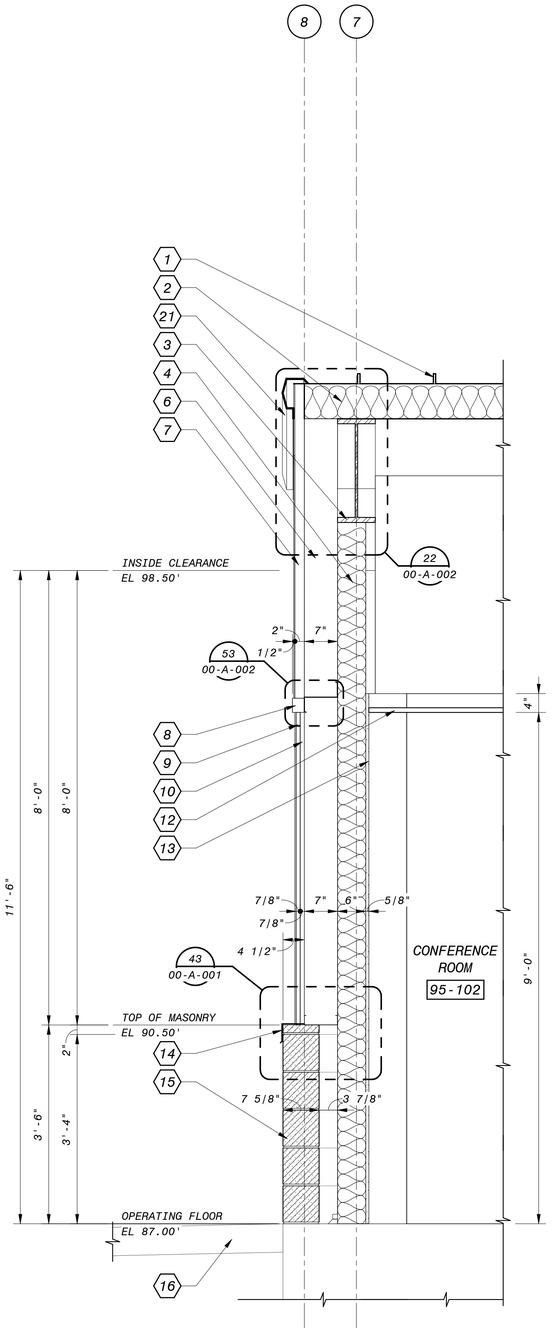

5 SECTION
95-A-102 3/4" = 1'-0"

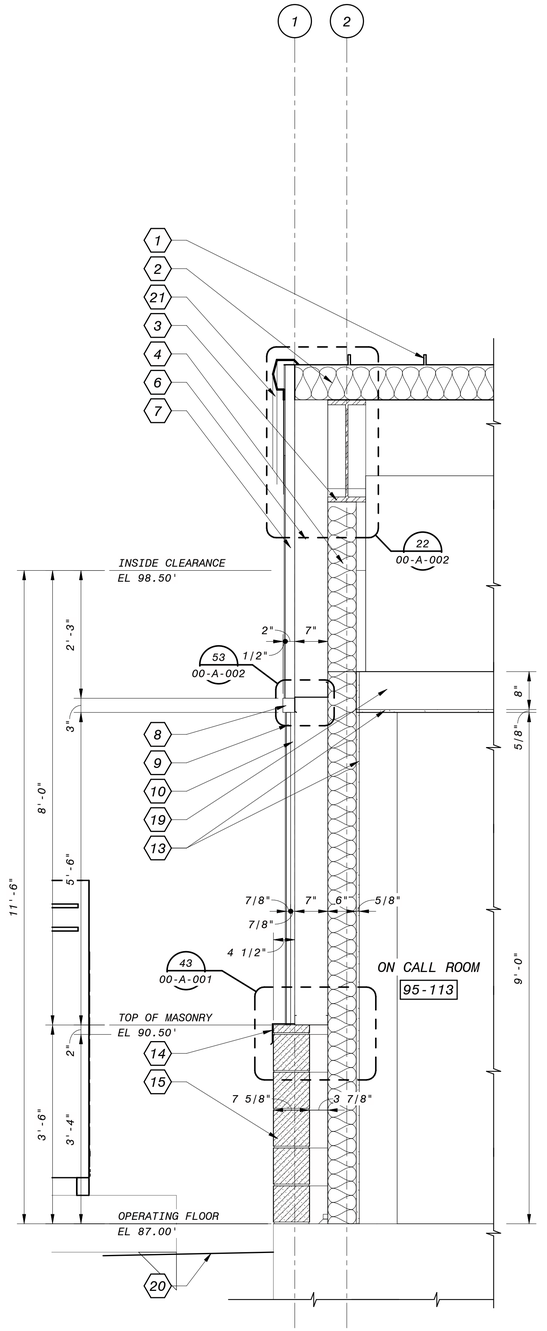

6 SECTION
95-A-102 3/4" = 1'-0"

GENERAL SHEET NOTES

1. FOR VERTICAL REINFORCING AND BOND BEAMS IN MASONRY DESIGN - SEE STRUCTURAL DRAWINGS
2. FOR HORIZONTAL JOINT REINFORCING - SEE SPECIFICATION SECTION 04200

SHEET KEYNOTES

1. METAL ROOFING PANELS
2. PURLIN SPACE WITH PINCH INSULATION
3. PRE-ENGINEERED FRAME PER METAL BUILDING MANUFACTURER
4. METAL STUD WALL WITH 5-1/2" BATT INSULATION
5. PRE-FINISHED FASCIA GUTTER
6. WALL GIRT SPACE
7. PRE-FINISHED RIBBED METAL SIDING
8. PRE-FINISHED METAL TRANSITION TRIM
9. PRE-FINISHED METAL FLAT PANEL SIDING
10. HORIZONTAL FURRING CHANNELS
11. METAL STUD WALL WRAPPING STRUCTURAL COLUMN WITH 3-1/2" BATT INSULATION
12. SUSPENDED ACOUSTIC TILE CEILING
13. 5/8" GYPSUM BOARD
14. PAINTED METAL "Z" FLASHING
15. BURNISHED 8x8x16 CONCRETE BLOCK
16. CONCRETE FLATWORK WHERE OCCURS
17. PRE-FINISHED METAL DOWNSPOUT
18. PRECAST CONCRETE SPLASH BLOCK
19. METAL C-JOIST CEILING FRAMING
20. FINISH GRADE
21. PRE-FINISHED METAL RAKE TRIM
22. PAINTED STRUCTURAL STEEL METAL FASCIA AT FACE OF CANTILEVERED ENTRY ROOF
23. PRE-FINISHED METAL SOFFIT PANELING
24. STRUCTURAL STEEL TUBE
25. 5-1/2" BATT INSULATION
26. GLAZED ALUMINUM STOREFRONT
27. PRE-FINISHED METAL CORNER TRIM

12" 6" 0' 1' 2' 3'
3/4" = 1'-0"

90% SUBMITTAL - NOT FOR CONSTRUCTION

NO.	BY	CHK	APP
B	EVB	BDF	EVB

REVISIONS AND RECORD OF USE

60% SUBMITTAL

7/30/2019 DATE

LICENSED ARCHITECT
BRUCE DOUGLAS FRASER
C 9787
REGISTERED PROFESSIONAL ENGINEER
STATE OF CALIFORNIA

FRASER SEMPLE ARCHITECTS

JOINT VENTURE

BLACK & VEATCH

FILANC

CITY OF MORRO BAY
MORRO BAY WATER RECLAMATION FACILITY (WRF)

OPERATIONS BUILDING
ARCHITECTURAL
WALL SECTIONS

DESIGNED: BDF
DETAILED: ANH
CHECKED: -
APPROVED: -
DATE:

0 1/2 1
IF THIS BAR DOES NOT MEASURE 1" THEN DRAWING IS NOT TO FULL SCALE

PROJECT NO.
400530

95-A-302
SHEET
OF

PLOTTED: 3/16/2020 11:05:11 AM
D400530

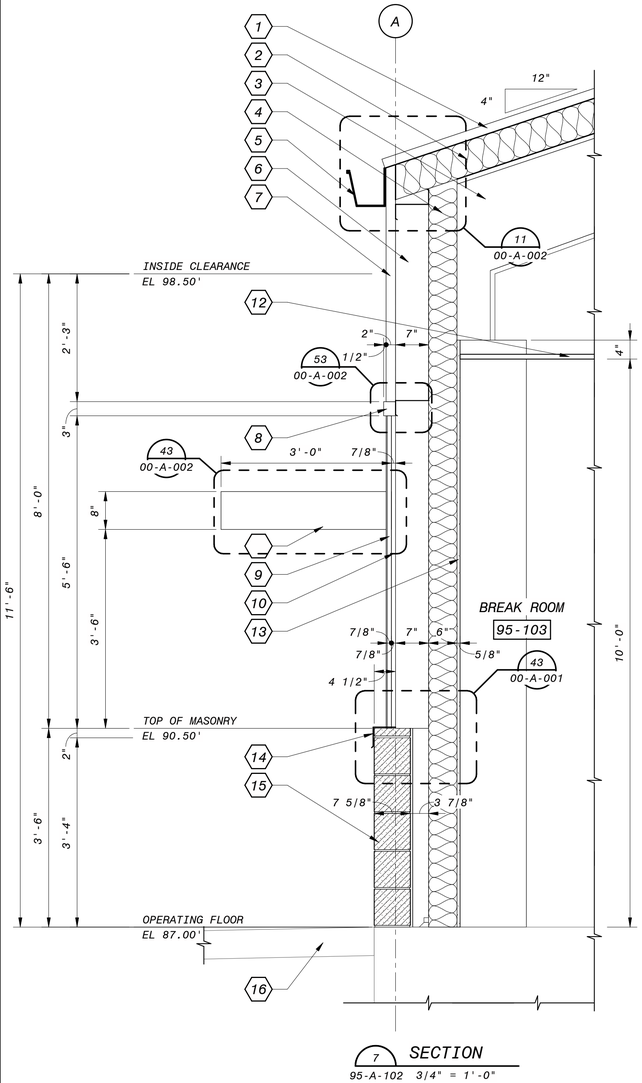

7 SECTION
95-A-102 3/4" = 1'-0"

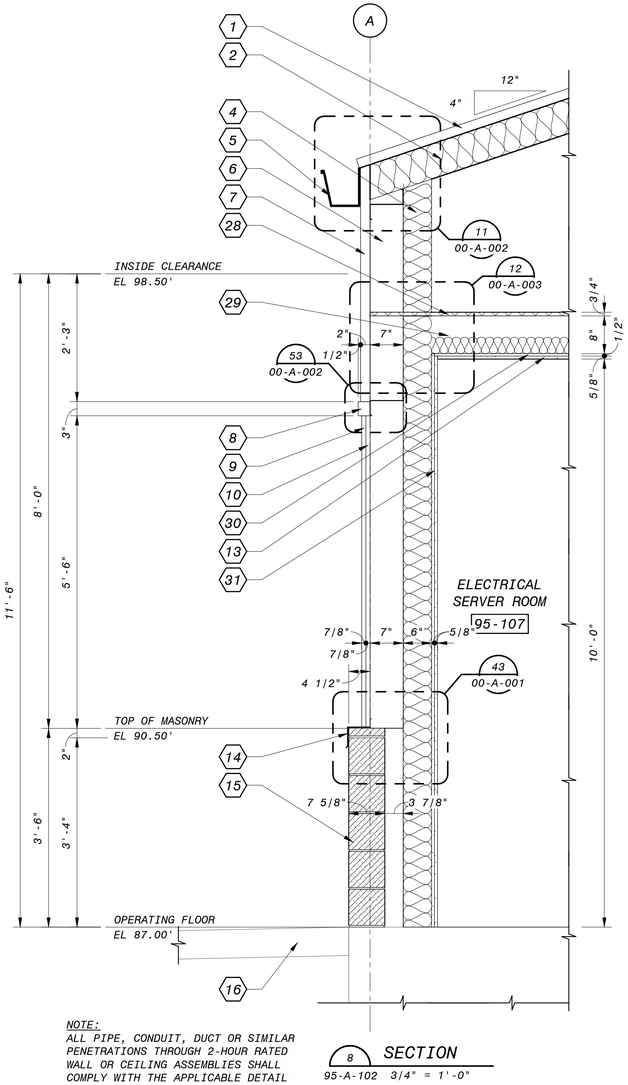

8 SECTION
95-A-102 3/4" = 1'-0"

NOTE:
ALL PIPE, CONDUIT, DUCT OR SIMILAR PENETRATIONS THROUGH 2-HOUR RATED WALL OR CEILING ASSEMBLIES SHALL COMPLY WITH THE APPLICABLE DETAIL ON SHEET 00-A-003

GENERAL SHEET NOTES

1. FOR VERTICAL REINFORCING AND BOND BEAMS IN MASONRY DESIGN - SEE STRUCTURAL DRAWINGS
2. FOR HORIZONTAL JOINT REINFORCING - SEE SPECIFICATION SECTION 04200

SHEET KEYNOTES

1. METAL ROOFING PANELS
2. PURLIN SPACE WITH PINCH INSULATION
3. PRE-ENGINEERED FRAME PER METAL BUILDING MANUFACTURER
4. METAL STUD WALL WITH 5-1/2" BATT INSULATION
5. PRE-FINISHED FASCIA GUTTER
6. WALL GIRT SPACE
7. PRE-FINISHED RIBBED METAL SIDING
8. PRE-FINISHED METAL TRANSITION TRIM
9. PRE-FINISHED METAL FLAT PANEL SIDING
10. HORIZONTAL FURRING CHANNELS
11. METAL STUD WALL WRAPPING STRUCTURAL COLUMN WITH 3-1/2" BATT INSULATION
12. SUSPENDED ACOUSTIC TILE CEILING - REFER TO SUSPENSION AND RESTRAINT DETAILS 10-23/00-A-005
13. 5/8" GYPSUM BOARD
14. PAINTED METAL "Z" FLASHING
15. BURNISHED 8x8x16 CONCRETE BLOCK
16. CONCRETE FLATWORK WHERE OCCURS
17. PRE-FINISHED METAL DOWNSPOUT
18. PRECAST CONCRETE SPLASH BLOCK
19. METAL C-JOIST CEILING FRAMING
20. FINISH GRADE
21. PRE-FINISHED METAL RAKE TRIM
22. PAINTED STRUCTURAL STEEL METAL FASCIA AT FACE OF CANTILEVERED ENTRY ROOF
23. PRE-FINISHED METAL SOFFIT PANELING
24. STRUCTURAL STEEL TUBE
25. 5-1/2" BATT INSULATION
26. GLAZED ALUMINUM STOREFRONT
27. PRE-FINISHED METAL CORNER TRIM
28. 3/4" TONGUE AND GROOVE CEMENT FIBER PANELS
29. 8" C-JOIST CEILING FRAMING WITH 3-1/2" BATT INSULATION
30. METAL HAT CHANNELS
31. TWO LAYERS 5/8" GYPSUM BOARD

12" 6" 0' 1' 2' 3'
3/4" = 1'-0"

90% SUBMITTAL - NOT FOR CONSTRUCTION

NO.	BY	CHK'D APP'D	DATE	REVISIONS AND RECORD OF USE

LICENSED ARCHITECT
BRUCE DOUGLAS FRASER
C 9787
REGISTERED PROFESSIONAL
STATE OF CALIFORNIA

FRASER SEMPLE ARCHITECTS

JOINT VENTURE

BLACK & VEATCH

FILANC

CITY OF MORRO BAY
MORRO BAY WATER
RECLAMATION FACILITY (WRF)

OPERATIONS BUILDING
ARCHITECTURAL
WALL SECTIONS

DESIGNED: BDF
DETAILED: ANH
CHECKED: -
APPROVED: -
DATE:

0 1/2 1
IF THIS BAR DOES NOT MEASURE 1" THEN DRAWING IS NOT TO FULL SCALE

PROJECT NO.
400530

95-A-303
SHEET
OF

PLOTTED: 3/16/2020 11:05:13 AM
D400530

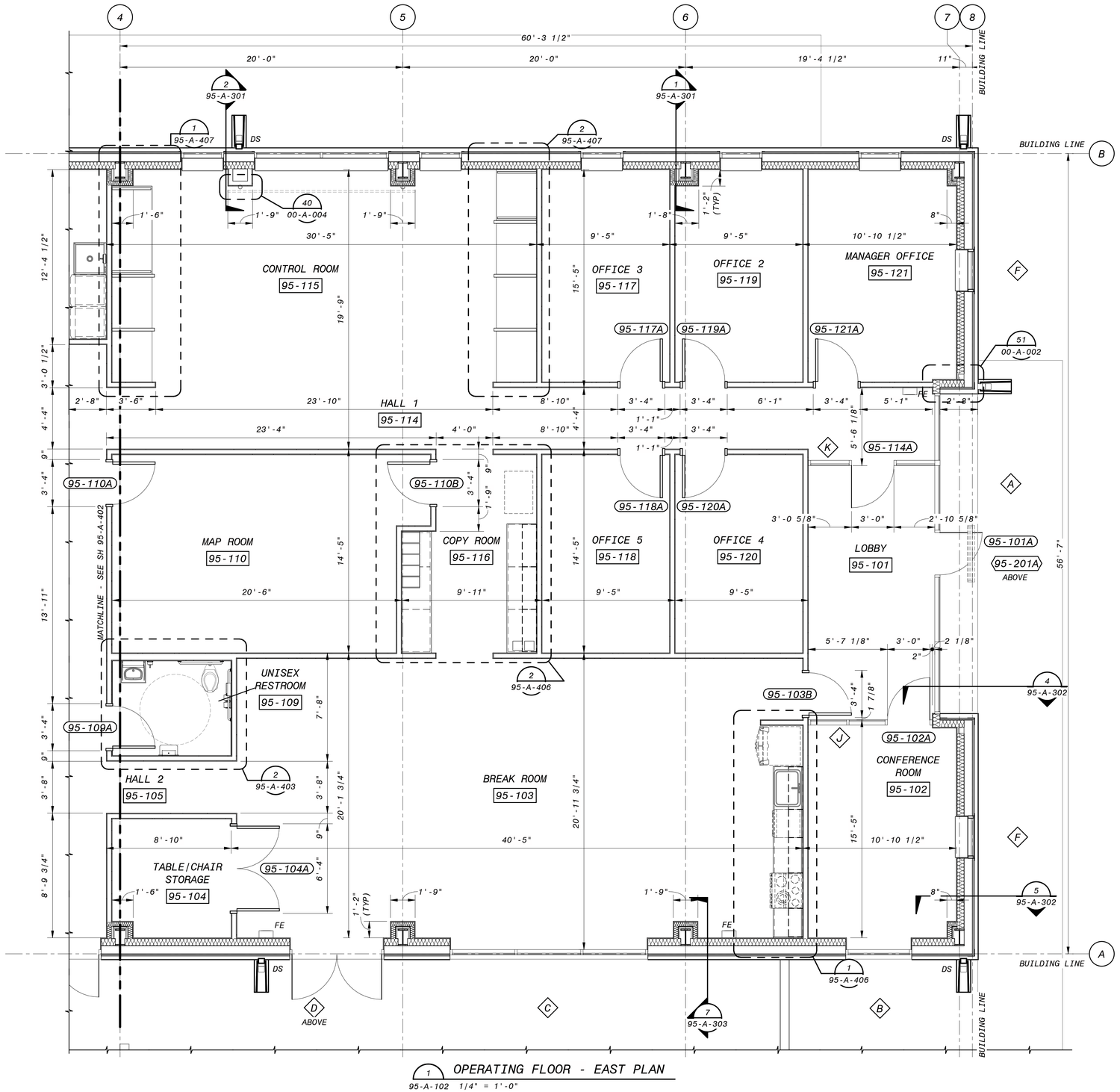

1 OPERATING FLOOR - EAST PLAN
95-A-102 1/4" = 1'-0"

4' 2' 0' 4' 8'
1/4" = 1'-0"

90% SUBMITTAL - NOT FOR CONSTRUCTION

GENERAL SHEET NOTES

SHEET KEYNOTES

NO.	BY	CHK	APP
B	EVB	BDF	EVB

60% SUBMITTAL — REVISIONS AND RECORD OF USE — DATE 7/30/2019

LICENSED ARCHITECT
BRUCE DOUGLAS FRASER
C 9787
EXPIRES 12/31/21
STATE OF CALIFORNIA

JOINT VENTURE
FRASER SEMPLE ARCHITECTS
BLACK & VEATCH
FILANC

CITY OF MORRO BAY
MORRO BAY WATER RECLAMATION FACILITY (WRF)

OPERATIONS BUILDING
ARCHITECTURAL
ENLARGED OPERATING FLOOR PLAN - EAST

DESIGNED: BDF
DETAILED: ANH
CHECKED: -
APPROVED: -
DATE:

0 1/2 1
IF THIS BAR DOES NOT MEASURE 1" THEN DRAWING IS NOT TO FULL SCALE

PROJECT NO. 400530

95-A-401
SHEET OF

PLOTTED: 3/16/2020 11:05:16 AM
D400530

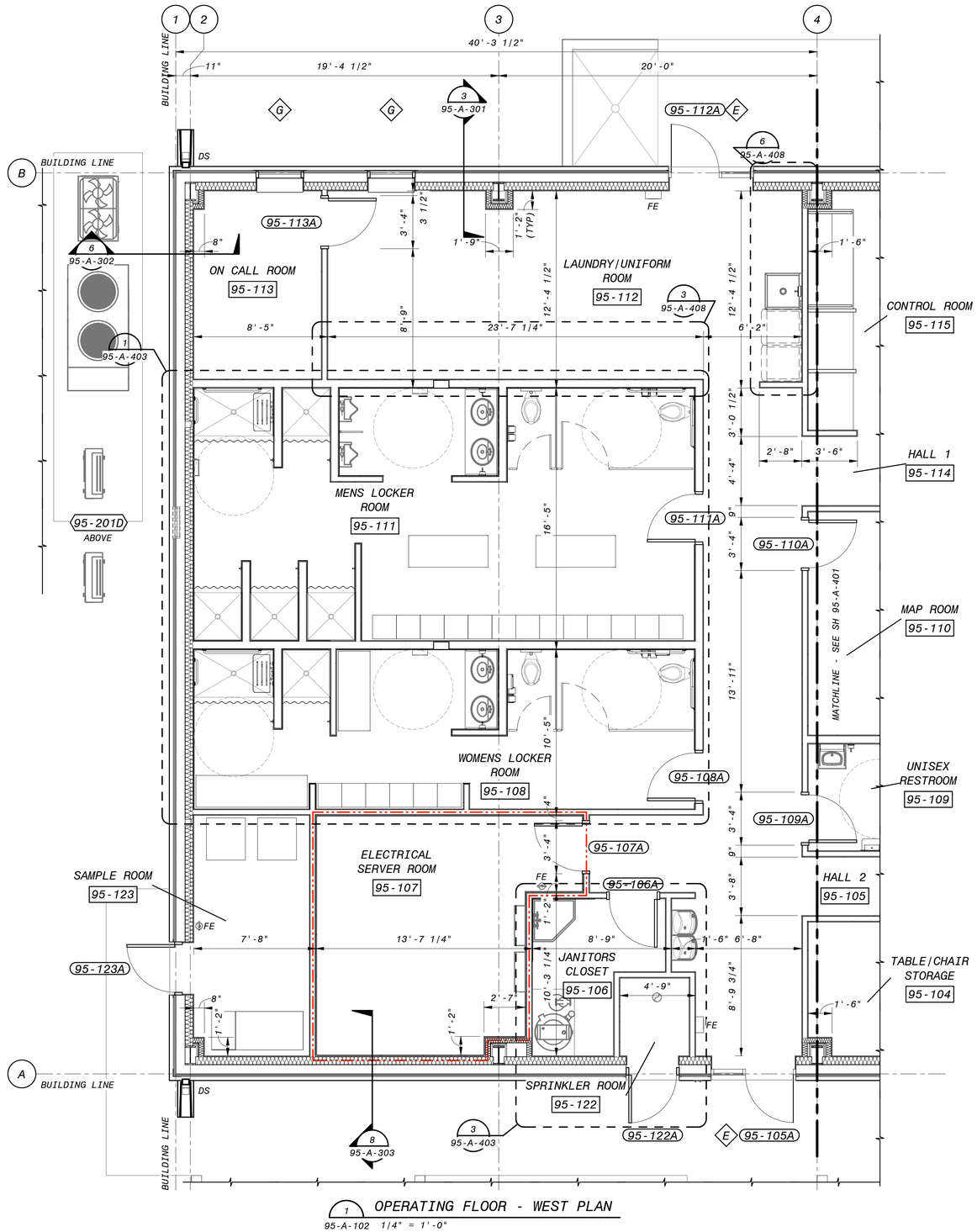

1 OPERATING FLOOR - WEST PLAN
95-A-102 1/4" = 1'-0"

4' 2' 0' 4' 8'
1/4" = 1'-0"

90% SUBMITTAL - NOT FOR CONSTRUCTION

GENERAL SHEET NOTES

SHEET KEYNOTES

NO.	BY	CHK	APP
B	EVB	BDF	EVB

REVISIONS AND RECORD OF USE

60% SUBMITTAL

DATE 7/30/2019

LICENSED ARCHITECT
BRUCE DOUGLAS FRASER
C 9787
STATE OF CALIFORNIA

FRASER SEMPLE ARCHITECTS
JOINT VENTURE
BLACK & VEATCH
FILANC

CITY OF MORRO BAY
MORRO BAY WATER RECLAMATION FACILITY (WRF)

OPERATIONS BUILDING
ARCHITECTURAL
ENLARGED OPERATING FLOOR PLAN - WEST

DESIGNED: BDF
DETAILED: ANH
CHECKED: -
APPROVED: -
DATE:

0 1/2 1
IF THIS BAR DOES NOT MEASURE 1" THEN DRAWING IS NOT TO FULL SCALE

PROJECT NO. 400530

95-A-402
SHEET OF

PLOTTED: 3/16/2020 11:05:20 AM
D400530

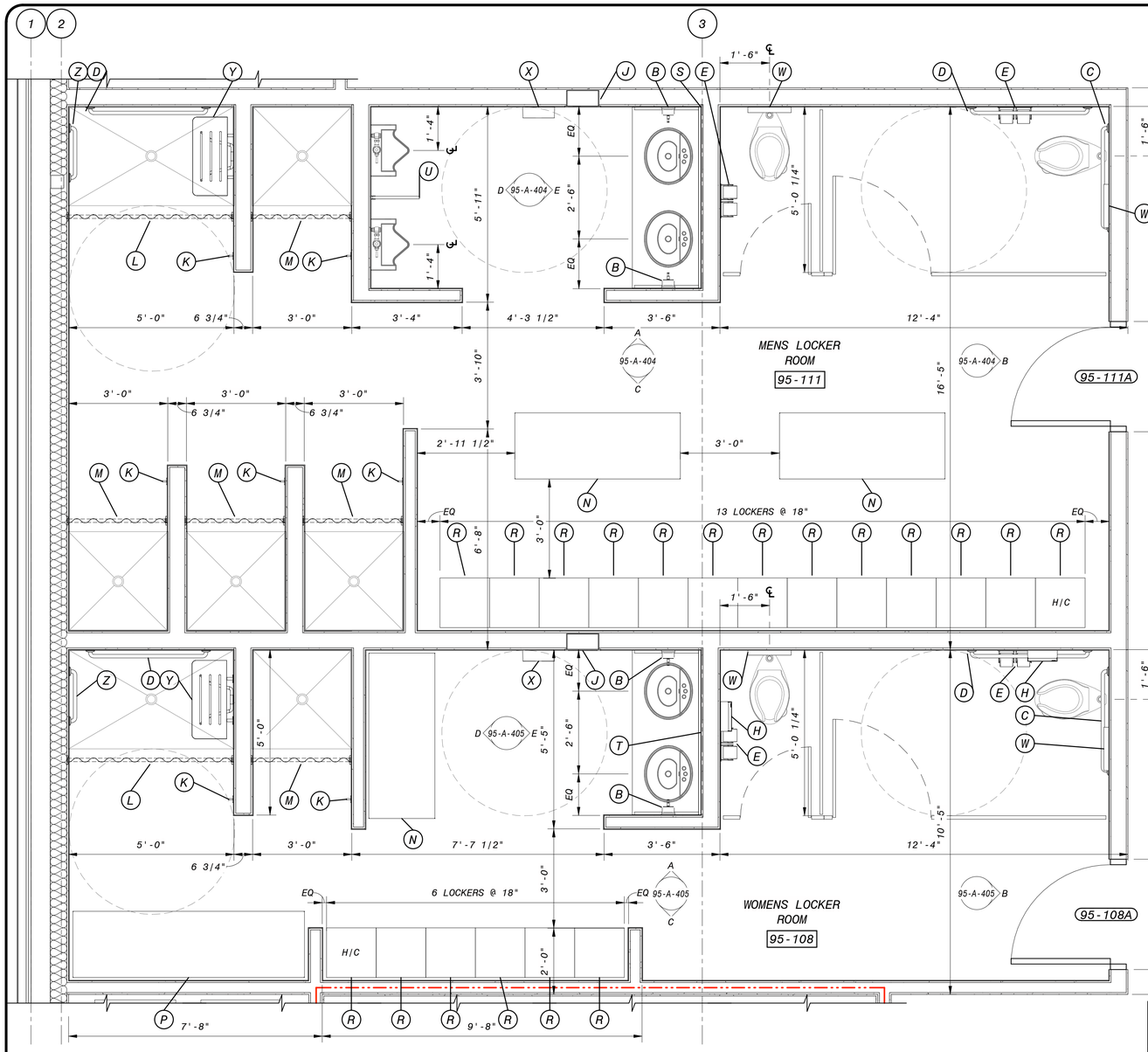

1 ENLARGED RESTROOM AND LOCKER ROOM PLAN
95-A-402 1/2" = 1'-0"

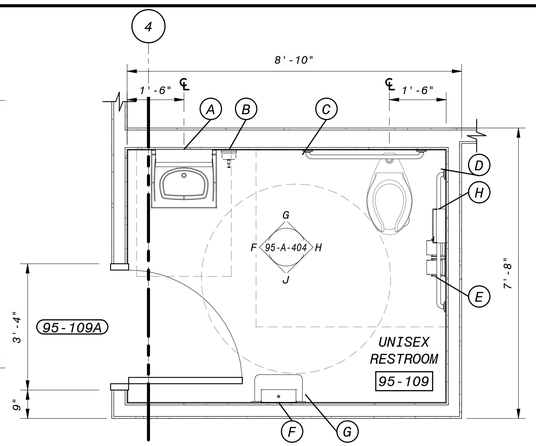

2 ENLARGED UNISEX RESTROOM PLAN
95-A-401 1/2" = 1'-0"

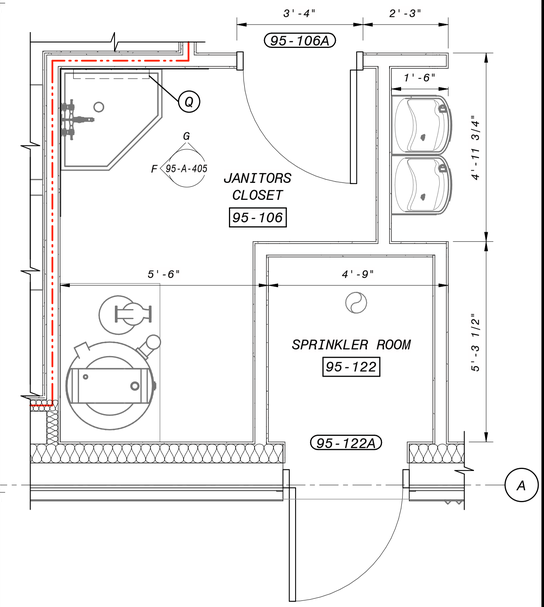

3 ENLARGED JANITORS CLOSET PLAN
95-A-402 1/2" = 1'-0"

ACCESSORY SCHEDULE

QTY	TYPE	DESCRIPTION	SPEC SECTION
1	A	FIXED TILT MIRROR, WITH SHELL	10 28 00
5	B	SOAP DISPENSER	10 28 00
3	C	36" GRAB BAR	10 28 00
5	D	42" GRAB BAR	10 28 00
5	E	TOILET TISSUE DISPENSER	10 28 00
1	F	TOWEL DISPENSER	10 28 00
1	G	WASTE RECEPTACLE, 18 GALLON, RECESSED	10 28 00
3	H	NAPKIN DISPOSAL, 1.5 GALLONS, SURFACE-MOUNTED	10 28 00
2	J	RECESSED TOWEL DISPENSER/WASTE RECEPTACLE	10 28 00
7	K	SINGLE ROBE HOOK - PROJECTS 1-3/4"	10 28 00
2	L	SHOWER CURTAIN ROD | EXPOSED MOUNTING | 1 1/4" OD | 60" L	10 28 00
5	M	SHOWER CURTAIN ROD | EXPOSED MOUNTING | 1 1/4" OD | 36" L	10 28 00
3	N	SOLID PLASTIC PEDESTAL BENCH - 24"x 60"	10 51 16
1	P	SOLID PLASTIC PEDESTAL BENCH - 24"x 84"	10 51 16
1	Q	STAINLESS STEEL MOP AND BROOM HOLDER	10 28 00
19	R	SOLID PLASTIC LOCKER	10 51 16
1	S	MIRROR (5'-5 5/8" x 3'-10 1/2")	10 28 00
1	T	MIRROR (4'-11 5/8" x 3'-10 1/2")	10 28 00
1	U	RESTROOM PARTITIONS, URINAL SCREEN	10 12 16
1	V	SOAP DISPENSER	10 28 00
4	W	SURFACE MOUNTED SEAT COVER DISPENSER	10 28 00
2	X	ELECTRIC HAND DRYER	10 28 00
2	Y	FLIP-UP ACCESSIBLE SHOWER SEAT	10 28 00
2	Z	18" GRAB BAR	10 28 00

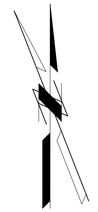

GENERAL SHEET NOTES

SHEET KEYNOTES

12' 6' 0' 1' 2' 3' 4' 5'
1/2" = 1'-0"

90% SUBMITTAL NOT FOR CONSTRUCTION

NO.	BY	CHK	APP
B	EVB	BDF	EVB

60% SUBMITTAL
REVISIONS AND RECORD OF USE
7/30/2019
DATE

LICENSED ARCHITECT
BRUCE DOUGLAS FRASER
C 9787
STATE OF CALIFORNIA

FRASER SEIPLE ARCHITECTS

JOINT VENTURE

BLACK & VEATCH

FILANC

CITY OF MORRO BAY
MORRO BAY WATER
RECLAMATION FACILITY (WRF)

OPERATIONS BUILDING
ARCHITECTURAL
ENLARGED RESTROOM PLANS

DESIGNED: BDF
DETAILED: ANH
CHECKED: -
APPROVED: -
DATE:

0 1/2 1
IF THIS BAR DOES NOT MEASURE 1" THEN DRAWING IS NOT TO FULL SCALE

PROJECT NO.
400530

95-A-403
SHEET
OF

PLOTTED: 3/16/2020 11:05:24 AM
D400530

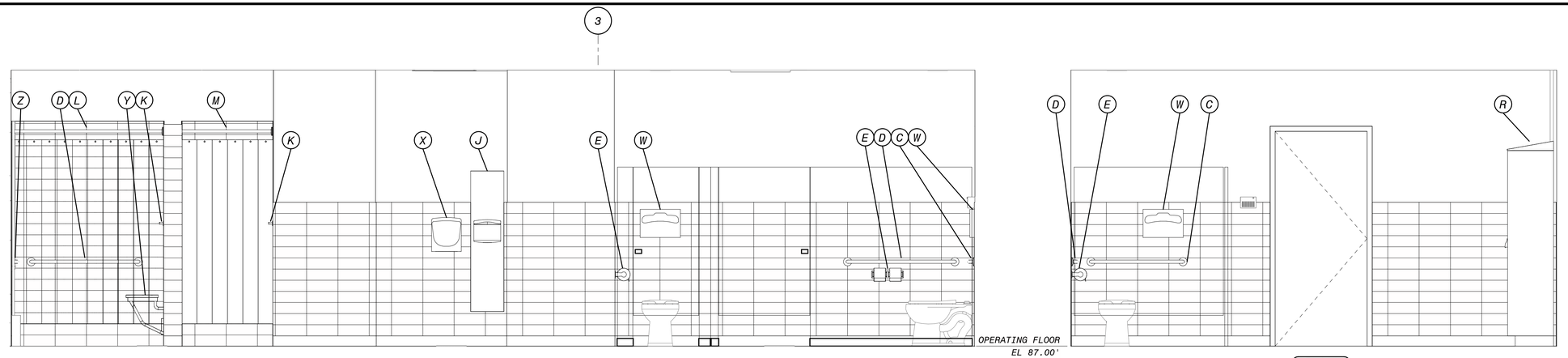

A MENS LOCKER ROOM NORTH ELEVATION
95-A-403 1/2" = 1'-0"

B MENS LOCKER ROOM EAST ELEVATION
95-A-403 1/2" = 1'-0"

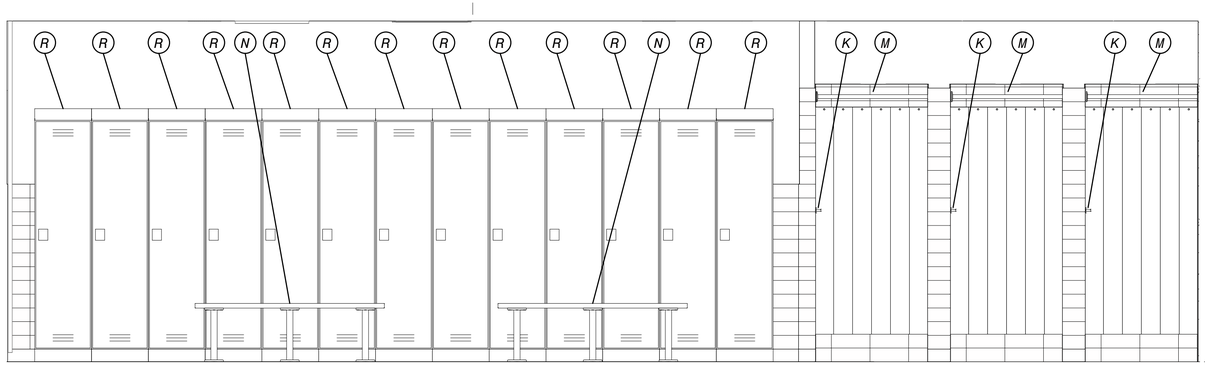

C MENS LOCKER ROOM SOUTH ELEVATION
95-A-403 1/2" = 1'-0"

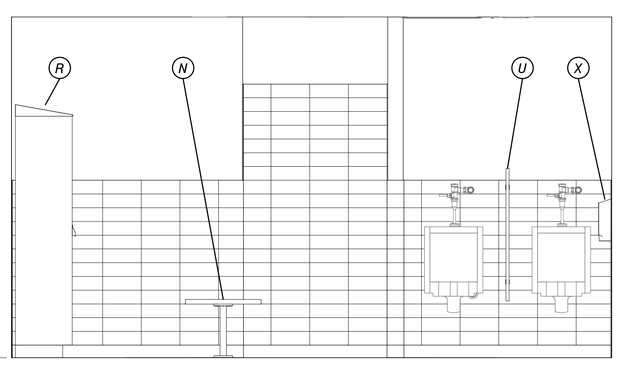

D MENS LOCKERROOM WEST ELEVATION
95-A-403 1/2" = 1'-0"

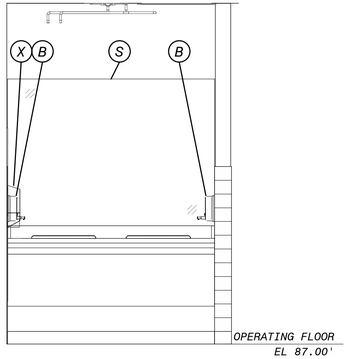

E MENS LOCKER ROOM EAST ELEVATION @ SINK
95-A-403 1/2" = 1'-0"

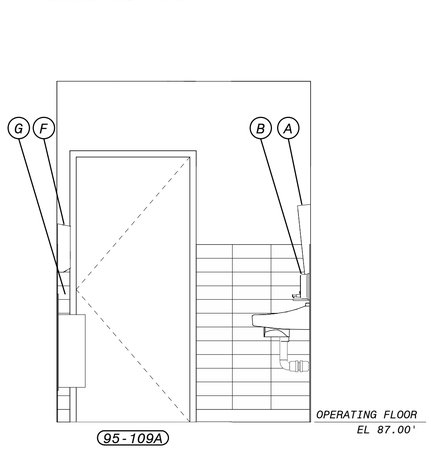

F UNISEX RESTROOM WEST ELEVATION
95-A-403 1/2" = 1'-0"

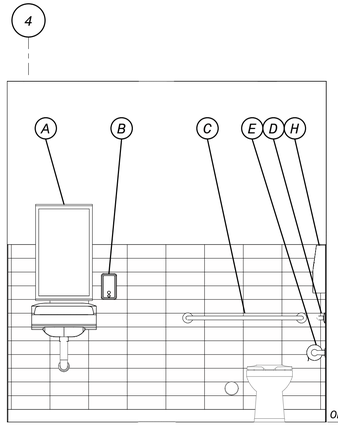

G UNISEX RESTROOM NORTH ELEVATION
95-A-403 1/2" = 1'-0"

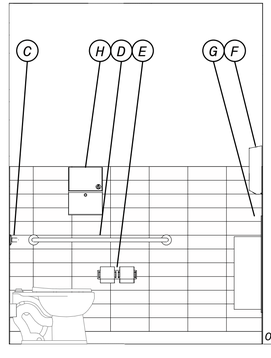

H UNISEX RESTROOM EAST ELEVATION
95-A-403 1/2" = 1'-0"

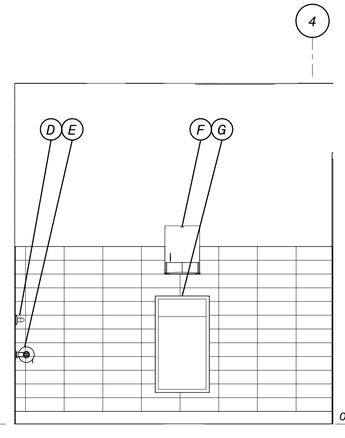

J UNISEX RESTROOM SOUTH ELEVATION
95-A-403 1/2" = 1'-0"

12' 6' 0' 1' 2' 3' 4' 5'
1/2" = 1'-0"

90% SUBMITTAL - NOT FOR CONSTRUCTION

NO.	BY	CHK	APP'D	DATE	REVISIONS AND RECORD OF USE
B	EVB	BDF	EVB	7/30/2019	60% SUBMITTAL

LICENSED ARCHITECT
BRUCE DOUGLAS FRASER
C 9787
STATE OF CALIFORNIA

FRASER SEMPLE ARCHITECTS
JOINT VENTURE
BLACK & VEATCH
FILANC

CITY OF MORRO BAY
MORRO BAY WATER
RECLAMATION FACILITY (WRF)

OPERATIONS BUILDING
ARCHITECTURAL
RESTROOM AND LOCKER ROOM ELEVATIONS

DESIGNED: BDF
DETAILED: ANH
CHECKED: -
APPROVED: -
DATE:

0 1/2 1
IF THIS BAR DOES NOT MEASURE 1" THEN DRAWING IS NOT TO FULL SCALE

PROJECT NO.
400530

95-A-404
SHEET
OF

PLOTTED: 3/16/2020 11:05:31 AM
D400530

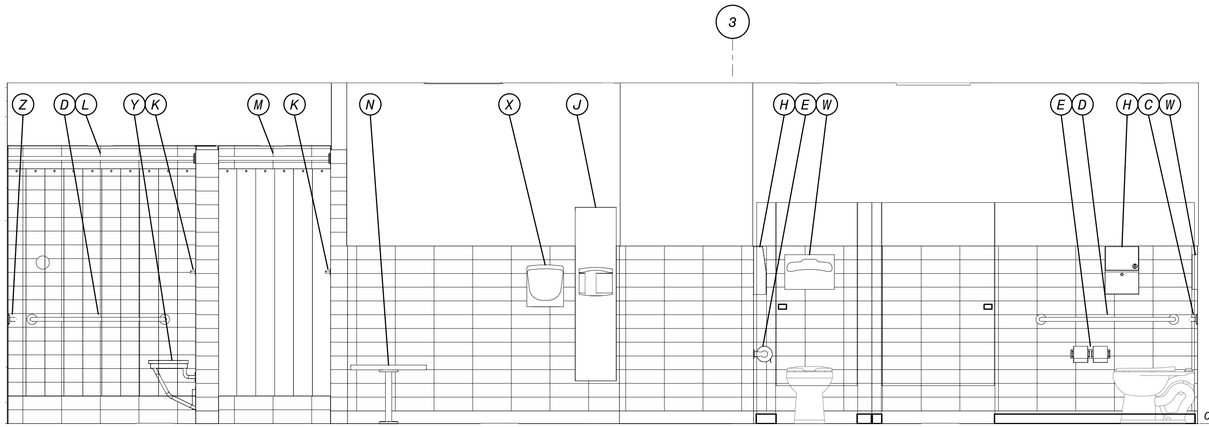

A WOMENS LOCKER ROOM NORTH ELEVATION
95-A-403 1/2" = 1'-0"

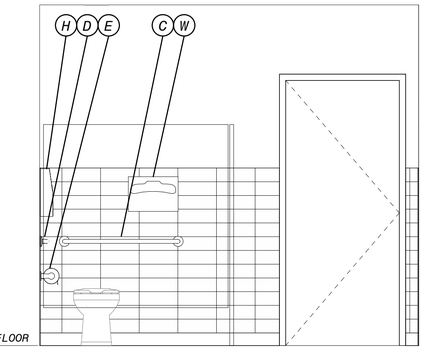

B WOMENS LOCKER ROOM EAST ELEVATION
95-A-403 1/2" = 1'-0"

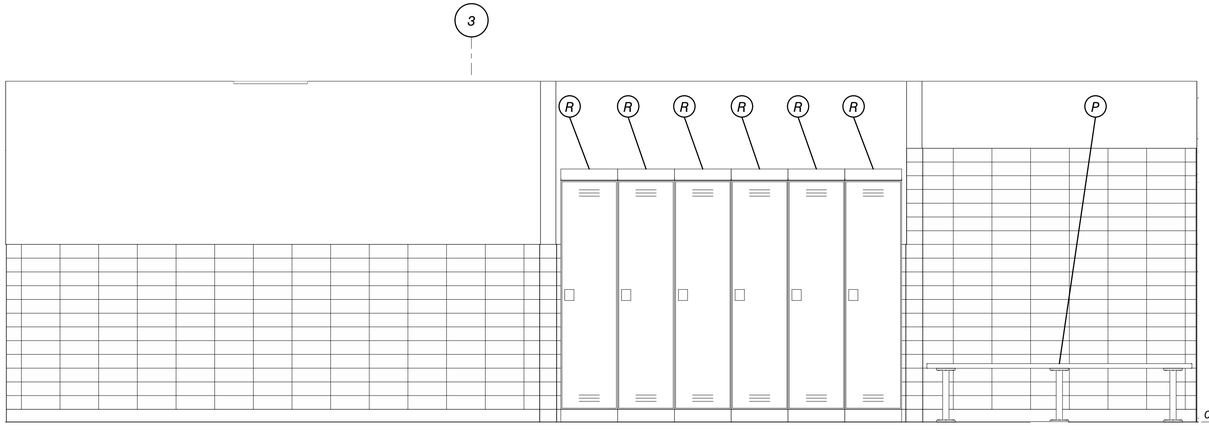

C WOMENS LOCKER ROOM SOUTH ELEVATION
95-A-403 1/2" = 1'-0"

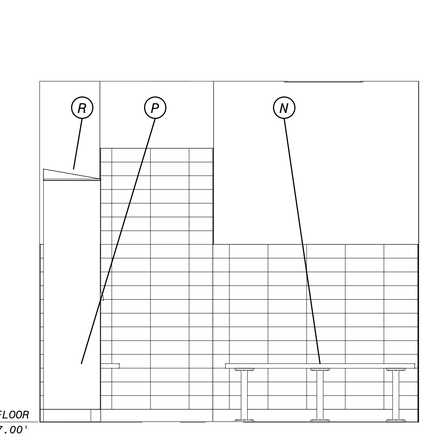

D WOMENS LOCKERROOM WEST ELEVATION
95-A-403 1/2" = 1'-0"

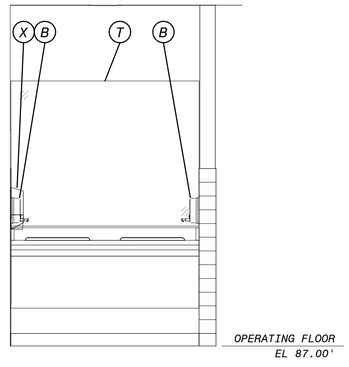

E WOMENS LOCKER ROOM EAST ELEVATION @ SINK
95-A-403 1/2" = 1'-0"

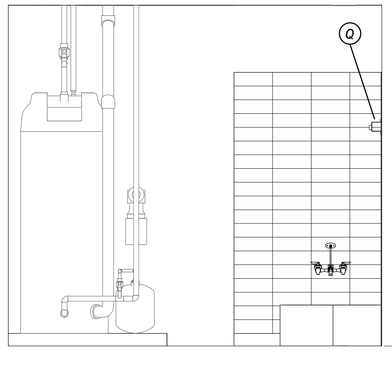

F JANITORS CLOSET ELEVATION - WEST
95-A-403 1/2" = 1'-0"

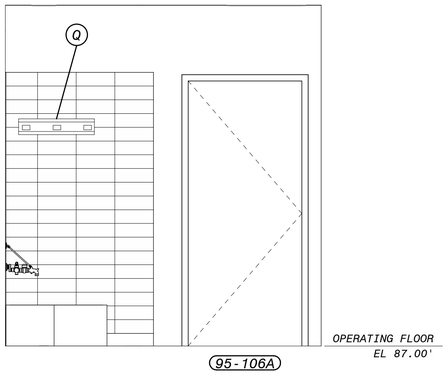

G JANITORS CLOSET ELEVATION - NORTH
95-A-403 1/2" = 1'-0"

12' 6' 0' 1' 2' 3' 4' 5'
1/2" = 1'-0"

90% SUBMITTAL - NOT FOR CONSTRUCTION

GENERAL SHEET NOTES

SHEET KEYNOTES

NO.	BY	CHK	APP
B	EVB	BDF	EVB

60% SUBMITTAL — REVISIONS AND RECORD OF USE

DATE: 7/30/2019

LICENSED ARCHITECT — BRUCE DOUGLAS FRASER — C 9787 — STATE OF CALIFORNIA

FRASER SEMPLE ARCHITECTS

JOINT VENTURE

BLACK & VEATCH

FILANC

CITY OF MORRO BAY
MORRO BAY WATER
RECLAMATION FACILITY (WRF)

OPERATIONS BUILDING
ARCHITECTURAL
RESTOOM AND LOCKER ROOM ELEVATIONS

DESIGNED: BDF
DETAILED: ANH
CHECKED: -
APPROVED: -
DATE:

0 1/2 1
IF THIS BAR DOES NOT MEASURE 1" THEN DRAWING IS NOT TO FULL SCALE

PROJECT NO. 400530

95-A-405
SHEET
OF

PLOTTED: 3/16/2020 11:05:36 AM
D400530

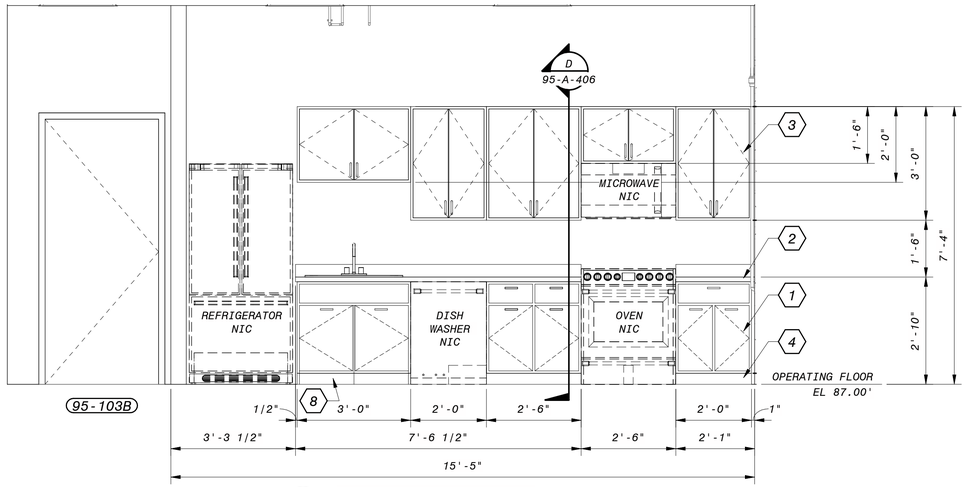

A BREAKROOM ELEVATION
95-A-406 1/2" = 1'-0"

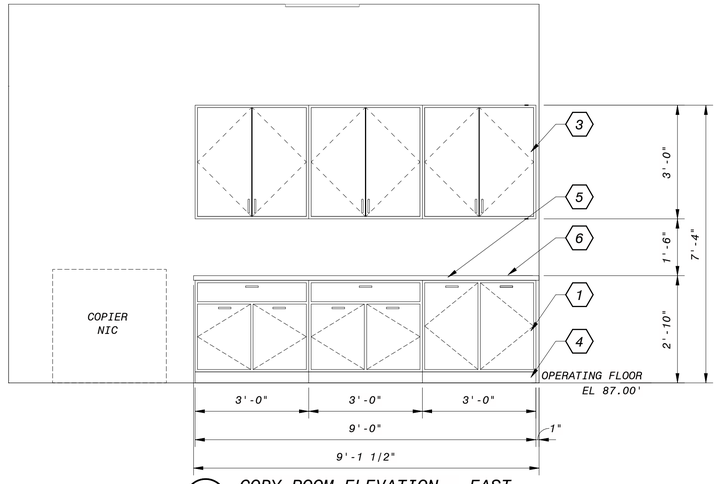

B COPY ROOM ELEVATION - EAST
95-A-406 1/2" = 1'-0"

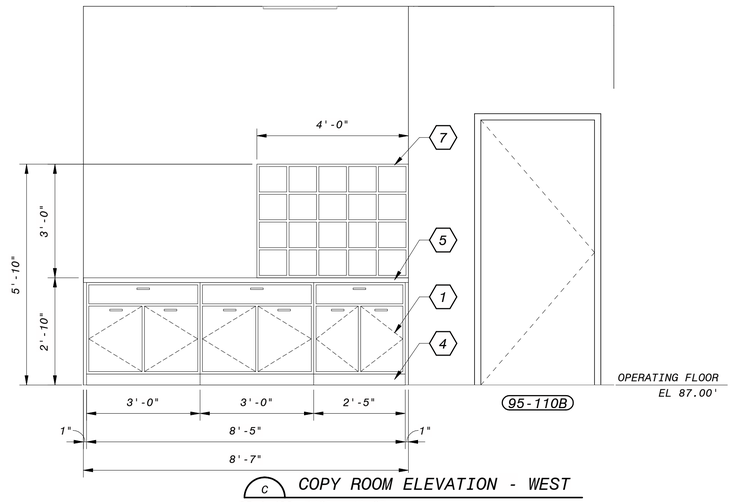

C COPY ROOM ELEVATION - WEST
95-A-406 1/2" = 1'-0"

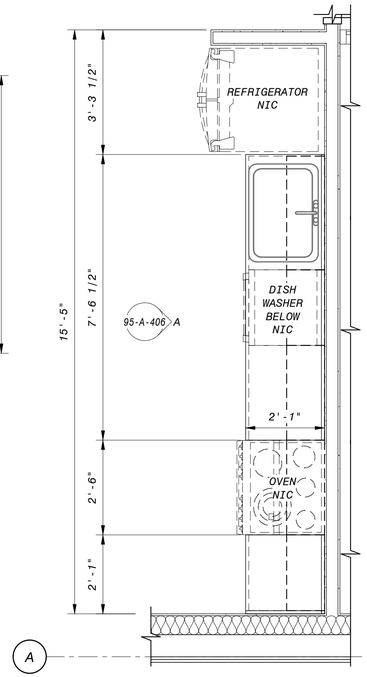

1 ENLARGED BREAKROOM PLAN
95-A-401 1/2" = 1'-0"

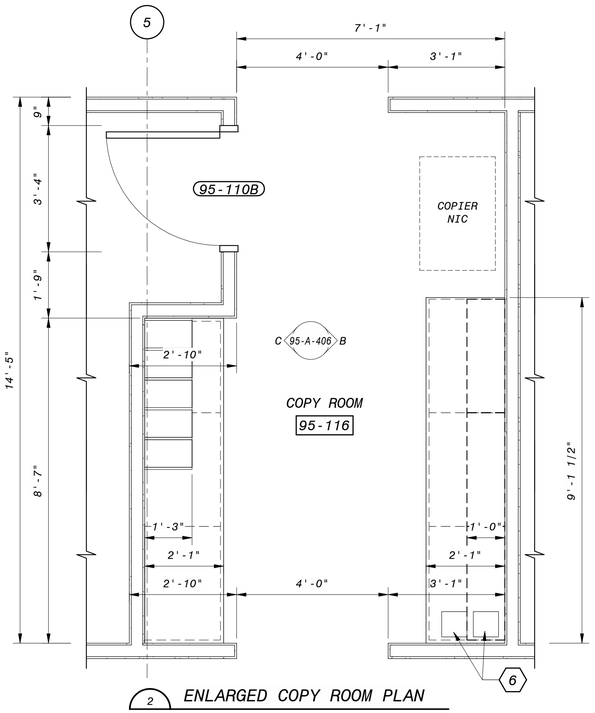

2 ENLARGED COPY ROOM PLAN
95-A-401 1/2" = 1'-0"

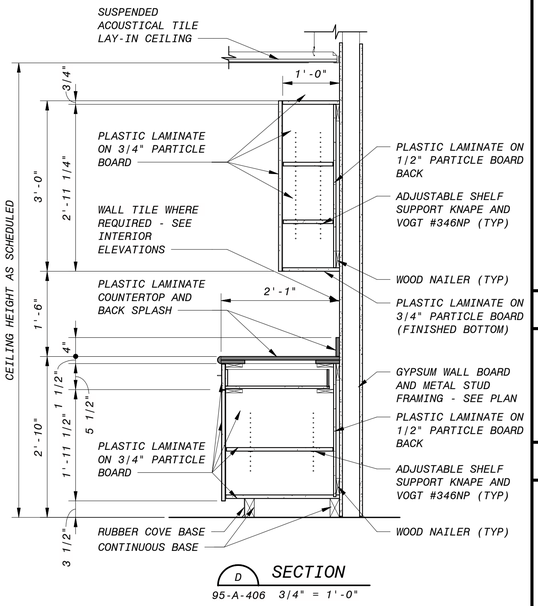

D SECTION
95-A-406 3/4" = 1'-0"

GENERAL SHEET NOTES

SHEET KEYNOTES

1. LAMINATE BASE CABINET
2. LAMINATE COUNTERTOP AND BACKSPLASH
3. LAMINATE WALL CABINET
4. TOE KICK WITH RESILIENT BASE
5. LAMINATE COUNTERTOP W/O BACKSPLASH
6. HOLES FOR TRASH AND RECYCLING CONTAINERS BELOW COUNTERTOP
7. LAMINATE MAIL SORTER
8. ATTACHED BASE FOR ACCESSIBLE APPROACH

NO.	BY	CHK	APP	DATE	REVISIONS AND RECORD OF USE
B	EVB	BDF	EVB	7/30/2019	60% SUBMITTAL

LICENSED ARCHITECT
BRUCE DOUGLAS FRASER
C 9787
STATE OF CALIFORNIA

FRASER SEIPLE ARCHITECTS
JOINT VENTURE
BLACK & VEATCH
FILANC

CITY OF MORRO BAY
MORRO BAY WATER
RECLAMATION FACILITY (WRF)

OPERATIONS BUILDING
ARCHITECTURAL
ENLARGED CASEWORK PLANS AND ELEVATIONS

DESIGNED: BDF
DETAILED: ANH
CHECKED: -
APPROVED: -
DATE:

0 1/2 1
IF THIS BAR DOES NOT MEASURE 1" THEN DRAWING IS NOT TO FULL SCALE

PROJECT NO.
400530

95-A-406
SHEET
OF

12' 6' 0' 1' 2' 3' 4' 5'
1/2" = 1'-0"

90% SUBMITTAL - NOT FOR CONSTRUCTION

PLOTTED: 3/16/2020 11:05:40 AM
D400530

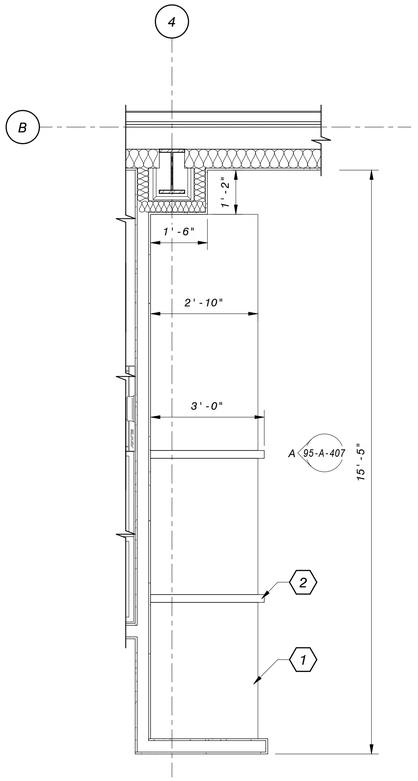

1 ENLARGED CONTROL ROOM - WEST PLAN
95-A-401 1/2" = 1'-0"

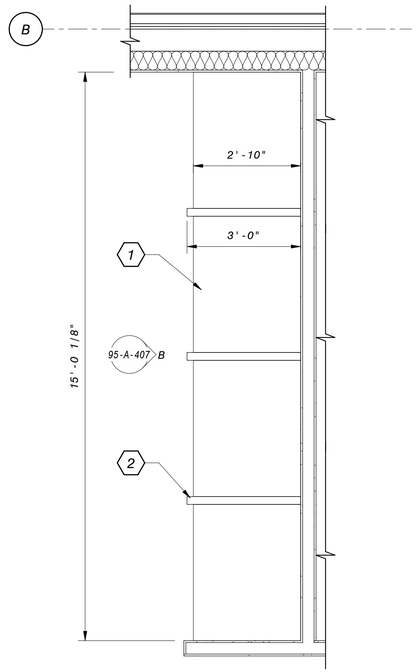

2 ENLARGED CONTROL ROOM - EAST PLAN
95-A-401 1/2" = 1'-0"

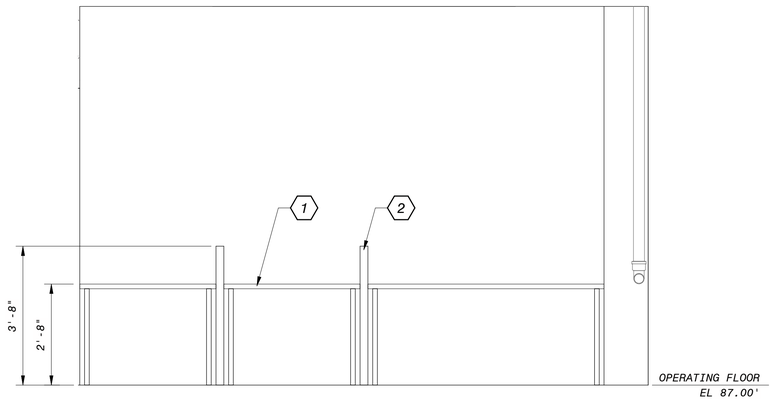

A CONTROL ROOM ELEVATION - WEST
95-A-407 1/2" = 1'-0"

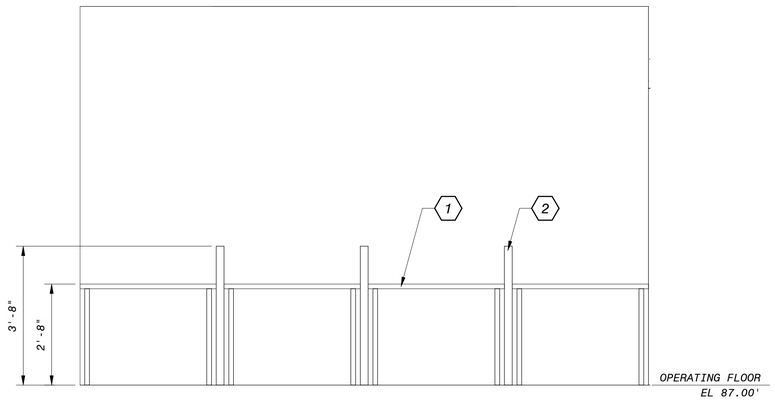

B CONTROLE ROOM ELEVATION - EAST
95-A-407 1/2" = 1'-0"

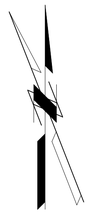

GENERAL SHEET NOTES

SHEET KEYNOTES

1. FREESTANDING HEIGHT ADJUSTABLE WORKSTATION
2. FABRIC WRAPPED WORKSTATON DIVIDER

NO.	BY	CHK	APP	DATE	REVISIONS AND RECORD OF USE
B	EVB	BDF	EVB	7/30/2019	60% SUBMITTAL

LICENSED ARCHITECT
BRUCE DOUGLAS FRASER
C 9787
REGISTERED PROFESSIONAL
STATE OF CALIFORNIA

FRASER SEMPLE ARCHITECTS
JOINT VENTURE
BLACK & VEATCH
FILANC

CITY OF MORRO BAY
MORRO BAY WATER
RECLAMATION FACILITY (WRF)

OPERATIONS BUILDING
ARCHITECTURAL
ENLARGED CASEWORK PLANS AND ELEVATIONS

DESIGNED: BDF
DETAILED: ANH
CHECKED: -
APPROVED: -
DATE:

0 1/2 1
IF THIS BAR DOES NOT MEASURE 1" THEN DRAWING IS NOT TO FULL SCALE

PROJECT NO.
400530

95-A-407
SHEET
OF

12' 6' 0' 1' 2' 3' 4' 5'
1/2" = 1'-0"

90% SUBMITTAL - NOT FOR CONSTRUCTION

PLOTTED: 3/16/2020 11:05:42 AM
D400530

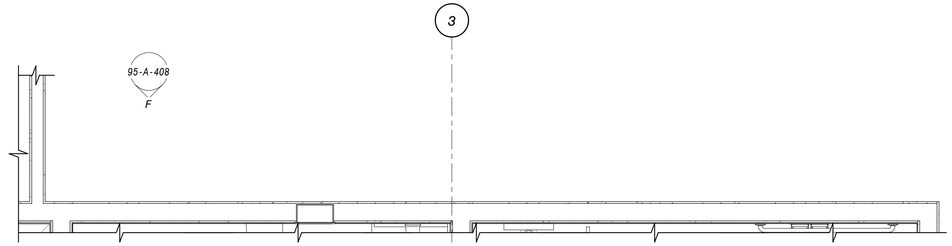

3 ENLARGED LAUNDRY/UNIFORM ROOM - SOUTH PLAN
95-A-402 1/2" = 1'-0"

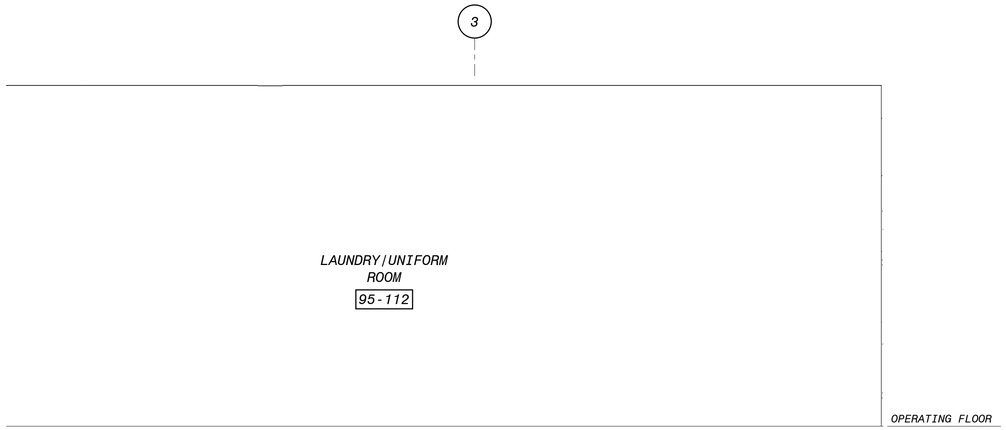

F LAUNDRY/UNIFORM ROOM - SOUTH
95-A-408 1/2" = 1'-0"

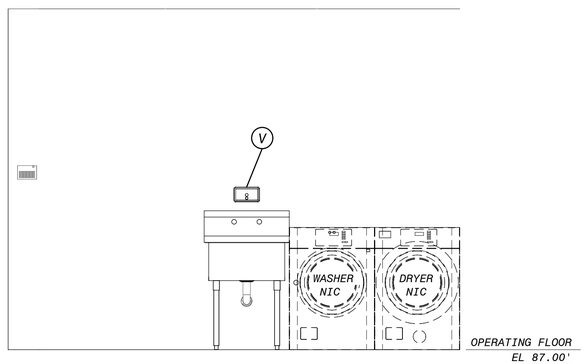

G LAUNDRY/UNIFORM ROOM - EAST
95-A-408 1/2" = 1'-0"

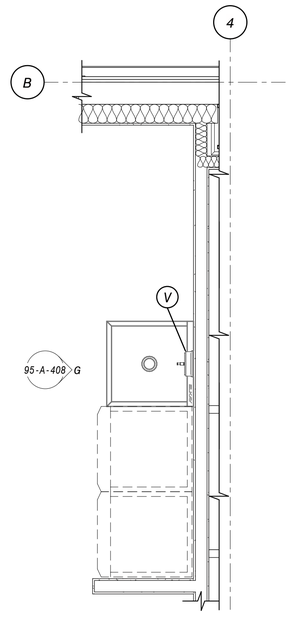

6 ENLARGED LAUNDRY/UNIFORM ROOM - EAST PLAN
95-A-402 1/2" = 1'-0"



GENERAL SHEET NOTES

SHEET KEYNOTES

NO.	BY	CHK	APP
B	EVB	BDF	EVB

60% SUBMITTAL
REVISIONS AND RECORD OF USE
DATE 7/30/2019

LICENSED ARCHITECT
BRUCE DOUGLAS FRASER
C 9787
REGISTERED PROFESSIONAL
STATE OF CALIFORNIA

FRASER SEIPLE ARCHITECTS
JOINT VENTURE
BLACK & VEATCH
FILANC

CITY OF MORRO BAY
MORRO BAY WATER
RECLAMATION FACILITY (WRF)

OPERATIONS BUILDING
ARCHITECTURAL
ENLARGED CASEWORK PLANS AND ELEVATIONS

DESIGNED: BDF
DETAILED: ANH
CHECKED: -
APPROVED: -
DATE:

0 1/2 1
IF THIS BAR DOES NOT MEASURE 1" THEN DRAWING IS NOT TO FULL SCALE

PROJECT NO.
400530

95-A-408
SHEET
OF

12' 6' 0' 1' 2' 3' 4' 5'
1/2" = 1'-0"

90% SUBMITTAL - NOT FOR CONSTRUCTION

PLOTTED: 3/16/2020 11:05:45 AM
D400530

ROOM FINISH SCHEDULE

ROOM No.	ROOM NAME	FLOOR		WALLS												CEILING			REMARKS
				NORTH			EAST			SOUTH			WEST						
		MATERIAL	FINISH	MATERIAL	FINISH	BASE	MATERIAL	FINISH	BASE	MATERIAL	FINISH	BASE	MATERIAL	FINISH	BASE	MATERIAL	FINISH	HEIGHT	
OPERATIONS BUILDING																			
95-101	LOBBY	CO	CSS	SF	ALUM	NO	SF	ALUM	NO	SF	ALUM	NO	GWB	PT	RB	GWB	PT	9'-0"	
95-102	CONFERENCE ROOM	CO	CSS	SF	ALUM	NO	GWB	PT	RB	GWB	PT	RB	GWB	PT	RB	SB	FF	9'-0"	
95-103	BREAK ROOM	CO	CSS	GWB	PT	RB	GWB	PT	RB	SF	ALUM	NO	GWB	PT	RB	SB	FF	10'-0"	
95-104	TABLE/CHAIR STORAGE	CO	CSS	GWB	PT	RB	GWB	PT	RB	GWB	PT	RB	GWB	PT	RB	GWB	PT	9'-0"	
95-105	HALL 2	CO	CS	GWB	PT	RB	GWB	PT	RB	SF	ALUM	NO	GWB	PT	RB	GWB	PT	9'-0"	
95-106	JANITORS CLOSET	CO	CS	CT/GWB	PT	CC/RB	GWB	PT	RB	GWB	PT	RB	CT/GWB	PT	CC/RB	GWB	PT	9'-0"	
95-107	ELECTRICAL SERVER ROOM	CO	CS	GWB	PT	RB	GWB	PT	RB	GWB	PT	RB	GWB	PT	RB	GWB	PT	10'-0"	
95-108	WOMENS LOCKER ROOM	CO	CS	CT/GWB	PT	CC	CT/GWB	PT	CC	CT/GWB	PT	CC	CT/GWB	PT	CC	GWB	PT	9'-0"	
95-109	UNISEX RESTROOM	CO	CS	CT/GWB	PT	CC	CT/GWB	PT	CC	CT/GWB	PT	CC	CT/GWB	PT	CC	GWB	PT	9'-0"	
95-110	MAP ROOM	CO	CSS	GWB	PT	RB	GWB	PT	RB	GWB	PT	RB	GWB	PT	RB	SB	FF	9'-0"	
95-111	MENS LOCKER ROOM	CO	CS	CT/GWB	PT	CC	CT/GWB	PT	CC	CT/GWB	PT	CC	CT/GWB	PT	CC	GWB	PT	9'-0"	
95-112	LAUNDRY/UNIFORM ROOM	CO	CS	SF/GWB	PT	RB	GWB	PT	RB	GWB	PT	RB	GWB	PT	RB	GWB	PT	9'-0"	
95-113	ON CALL ROOM	CO	CS	GWB	PT	RB	GWB	PT	RB	GWB	PT	RB	GWB	PT	RB	GWB	PT	9'-0"	
95-114	HALL 1	CO	CSS	GWB	PT	RB	SF	ALUM	NO	GWB	PT	RB	-	-	-	GWB	PT	9'-0"	
95-115	CONTROL ROOM	CO	CSS	GWB	PT	RB	GWB	PT	RB	GWB	PT	RB	GWB	PT	RB	SB	FF	10'-0"	
95-116	COPY ROOM	CO	CSS	GWB	PT	RB	GWB	PT	RB	GWB	PT	RB	GWB	PT	RB	SB	FF	10'-0"	
95-117	OFFICE 3	CO	CSS	GWB	PT	RB	GWB	PT	RB	GWB	PT	RB	GWB	PT	RB	SB	FF	9'-0"	
95-118	OFFICE 5	CO	CSS	GWB	PT	RB	GWB	PT	RB	GWB	PT	RB	GWB	PT	RB	SB	FF	9'-0"	
95-119	OFFICE 2	CO	CSS	GWB	PT	RB	GWB	PT	RB	GWB	PT	RB	GWB	PT	RB	SB	FF	9'-0"	
95-120	OFFICE 4	CO	CSS	GWB	PT	RB	GWB	PT	RB	GWB	PT	RB	GWB	PT	RB	SB	FF	9'-0"	
95-121	MANAGER OFFICE	CO	CSS	GWB	PT	RB	GWB	PT	RB	GWB	PT	RB	GWB	PT	RB	SB	FF	9'-0"	
95-122	SPRINKLER ROOM	CO	CSS	GWB	PT	NO	GWB	PT	NO	GWB	PT	NO	GWB	PT	NO	GWB	PT	9'-0"	
95-123	SAMPLE ROOM	CO	CSS	GWB	PT	RB	GWB	PT	RB	GWB	PT	RB	GWB	PT	RB	GWB	PT	9'-0"	

DOOR SCHEDULE

DOOR ID		DOOR SIZE		DOOR				TYPE (D)			FRAME				REMARKS
No. (D)		WIDTH	HEIGHT	MATERIAL	HEAD	JAMB	SILL		HARDWARE	RATING	MATERIAL	HEAD	JAMB	DEPTH	
OPERATIONS BUILDING															
95-101A		3'-0"	7'-0"	ALUM	22/00-A-001	-	23/00-A-001	C	-	-	ALUM	2"	2"	4 1/2"	SEE FRAME TYPE A - GLASS - 1" INSULATED
95-102A		3'-0"	7'-0"	ALUM	-	-	-	C	-	-	ALUM	2"	2"	4 1/2"	SEE FRAME TYPE J - GLASS - 1/4" CLEAR TEMPERED
95-103A	PR	3'-2"	7'-0"	ALUM	22/00-A-001	-	23/00-A-001	C/C	-	-	ALUM	0"	8"	4 1/2"	SEE FRAME TYPE D - GLASS - 1" INSULATED
95-103B		3'-0"	7'-0"	HM	-	-	-	A	-	-	HM	2"	2"	5 3/4"	
95-104A	PR	3'-0"	7'-0"	HM	-	-	-	A/A	-	-	HM	2"	2"	5 3/4"	
95-105A		3'-0"	7'-0"	ALUM	22/00-A-001	-	23/00-A-001	C	-	-	ALUM	2"	2"	4 1/2"	SEE FRAME TYPE E - GLASS - 1" INSULATED
95-106A		3'-0"	7'-0"	HM	-	-	-	A	-	-	HM	2"	2"	5 3/4"	
95-107A		3'-0"	7'-0"	HM	-	-	-	A	-	90 MIN	HM	2"	2"	5 3/4"	
95-108A		3'-0"	7'-0"	HM	-	-	-	A	-	-	HM	2"	2"	5 3/4"	
95-109A		3'-0"	7'-0"	HM	-	-	-	A	-	-	HM	2"	2"	5 3/4"	
95-110A		3'-0"	7'-0"	HM	-	-	-	A	-	-	HM	2"	2"	5 3/4"	
95-110B		3'-0"	7'-0"	HM	-	-	-	A	-	-	HM	2"	2"	5 3/4"	
95-111A		3'-0"	7'-0"	HM	-	-	-	A	-	-	HM	2"	2"	5 3/4"	
95-112A		3'-0"	7'-0"	ALUM	22/00-A-001	-	23/00-A-001	C	-	-	ALUM	2"	2"	4 1/2"	SEE FRAME TYPE E - GLASS - 1" INSULATED
95-113A		3'-0"	7'-0"	HM	-	-	-	A	-	-	HM	2"	2"	5 3/4"	
95-114A		3'-0"	7'-0"	ALUM	-	-	-	C	-	-	ALUM	2"	2"	4 1/2"	SEE FRAME TYPE K - GLASS - 1/4" CLEAR TEMPERED
95-117A		3'-0"	7'-0"	HM	-	-	-	B	-	-	HM	2"	2"	5 3/4"	
95-118A		3'-0"	7'-0"	HM	-	-	-	B	-	-	HM	2"	2"	5 3/4"	
95-119A		3'-0"	7'-0"	HM	-	-	-	B	-	-	HM	2"	2"	5 3/4"	
95-120A		3'-0"	7'-0"	HM	-	-	-	B	-	-	HM	2"	2"	5 3/4"	
95-121A		3'-0"	7'-0"	HM	-	-	-	B	-	-	HM	2"	2"	5 3/4"	
95-122A		3'-0"	7'-0"	FRP	10/00-A-001	31 AND 32/00-A-001	40/00-A-001	A	-	-	FRP	2"	2"	5 3/4"	
95-123A		3'-0"	7'-0"	FRP	10/00-A-001	31 AND 32/00-A-001	40/00-A-001	A	-	-	FRP	2"	2"	5 3/4"	

WINDOW SYSTEM AND FRAME TYPE SCHEDULE

QTY	TYPE (WS)	OPENING		WINDOW							REMARKS
		WIDTH	HEIGHT	MATERIAL	HEAD	JAMB	MULLION	SILL	GLASS	TOP ELEV	
OPERATIONS BUILDING											
1	A	22'-8"	9'-0"	ALUM	10/00-A-001	11 AND 12/00-A-001	-	21/00-A-001	1" INSULATED	96.00'	SEE DOOR 95-101A
1	B	4'-8"	9'-0"	ALUM	10/00-A-001	11 AND 12/00-A-001	-	21/00-A-001	1" INSULATED	96.00'	
1	C	14'-0"	9'-0"	ALUM	-	12/00-A-001	-	20/00-A-001	1" INSULATED	96.00'	
1	D	6'-8"	9'-0"	ALUM	10/00-A-001	-	22/00-A-001	23/00-A-001	1" INSULATED	96.00'	SEE DOOR 95-103A
2	E	5'-4"	9'-0"	ALUM	10/00-A-001	11 AND 12/00-A-001	-	21/00-A-001	1" INSULATED	96.00'	
5	H	3'-0"	5'-6"	ALUM	10/00-A-001	11/00-A-001	-	20/00-A-001	1" INSULATED	96.00'	3'-6" HIGH OPERABLE LIT W/ FIXED TRANSOM
1	I	9'-6"	5'-6"	ALUM	10/00-A-001	12/00-A-001	-	20/00-A-001	1" INSULATED	96.00'	FIXED
1	J	8'-9 1/8"	9'-0"	ALUM	-	-	-	-	1/4" TEMPERED	96.00'	SEE DOOR 95-102A
1	K	9'-3 3/4"	9'-0"	ALUM	-	-	-	-	1/4" TEMPERED	96.00'	SEE DOOR 95-114A

WINDOW SCHEDULE

QTY	TYPE (W)	OPENING		WINDOW							REMARKS
		WIDTH	HEIGHT	MATERIAL	HEAD	JAMB	MULLION	SILL	GLASS	TOP ELEV	
OPERATIONS BUILDING											
2	F	3'-0"	3'-6"	ALUM	50/00-A-001	51/00-A-001	-	52/00-A-001	1" INSULATED	94.17'	FIXED
2	G	3'-0"	3'-6"	ALUM	-	-	-	-	1" INSULATED	94.17'	OPERABLE

LOUVER SCHEDULE

LOUVER ID	OPENING		LOUVER					REMARKS
No. (L)	WIDTH	HEIGHT	TYPE	HEAD	JAMB	SILL	TOP ELEV	
OPERATIONS BUILDING								
95-201A	4'-0"	4'-0"	ALUM	30/00-A-002	31/00-A-002	33/00-A-002	103.00'	
95-201B	4'-0"	4'-0"	ALUM	30/00-A-002	31/00-A-002	33/00-A-002	113.67'	
95-201C	4'-0"	4'-0"	ALUM	30/00-A-002	31/00-A-002	33/00-A-002	113.67'	
95-201D	2'-0"	2'-0"	ALUM	30/00-A-002	31/00-A-002	33/00-A-002	99.00'	
95-201E	4'-0"	4'-0"	ALUM	30/00-A-002	31/00-A-002	33/00-A-002	113.67'	
95-201F	4'-0"	4'-0"	ALUM	30/00-A-002	31/00-A-002	33/00-A-002	113.67'	

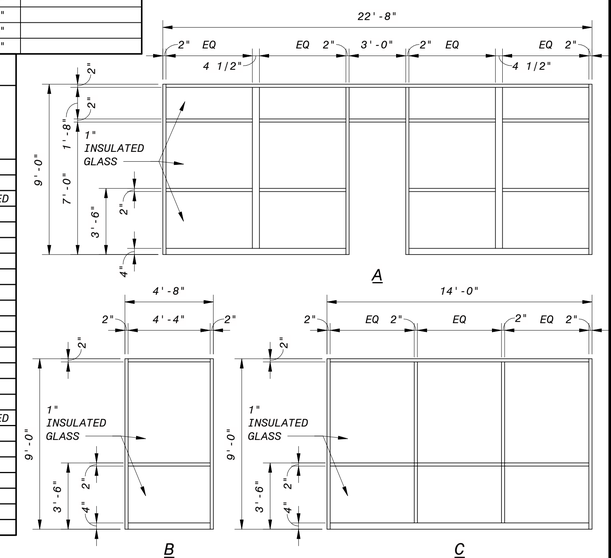

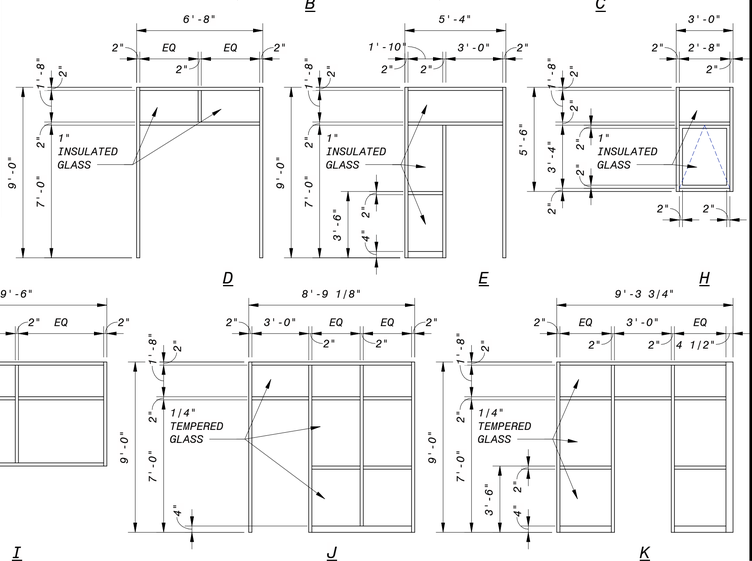

FRAME TYPES

SCHEDULE LEGEND

ALUM	-	ALUMINUM
CB	-	CONCRETE BLOCK (?)
CC	-	CERAMIC COVE BASE
CO	-	CONCRETE
CP	-	CARPET (?)
CS	-	SEALED CONCRETE
CSS	-	STAINED AND SEALED CONCRETE
CT	-	CERAMIC TILE (WALL)
EXP	-	EXPOSED CONSTRUCTION (?)
FF	-	FACTORY FINISH
FRP	-	FIBER REINFORCED PLASTIC
FS	-	FLOOR SEALER (?)
GWB	-	GYPSUM WALLBOARD
HM	-	HOLLOW METAL
MT	-	MOSAIC TILE (?)
NO	-	NONE
PP	-	PORCELAIN PAVER TILE (?)
PT	-	PAINTED
RB	-	RUBBER BASE
RT	-	RUBBER TILE (?)
SA	-	SUSPENDED ACOUSTICAL PANEL (24"x 24") (?)
SB	-	SUSPENDED ACOUSTICAL PANEL (24"x 48")
SF	-	GLAZED STOREFRONT
WD	-	WOOD (?)

DOOR TYPES

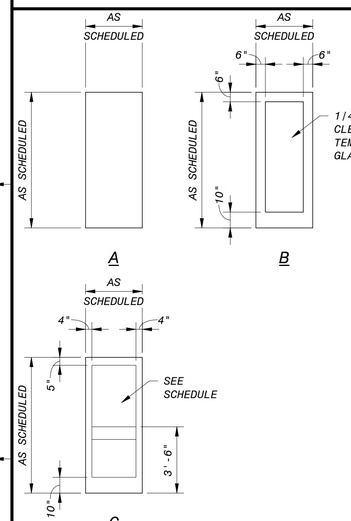

WINDOW TYPES

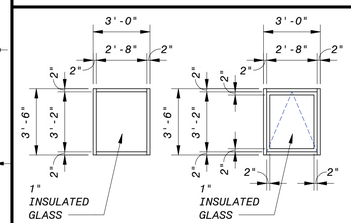

90% SUBMITTAL - NOT FOR CONSTRUCTION

NO.	BY	CHK'D	APP'D	DATE	REVISIONS AND RECORD OF USE

LICENSED ARCHITECT — BRUCE DOUGLAS FRASER — C 9787 — REGISTERED PROFESSIONAL — STATE OF CALIFORNIA

FRASER SEMPLE ARCHITECTS

JOINT VENTURE

BLACK & VEATCH

FILANC

CITY OF MORRO BAY
MORRO BAY WATER
RECLAMATION FACILITY (WRF)

OPERATIONS BUILDING
ARCHITECTURAL
SCHEDULES

DESIGNED: BDF
DETAILED: ANH
CHECKED: -
APPROVED: -
DATE:

0 1/2 1
IF THIS BAR DOES NOT MEASURE 1" THEN DRAWING IS NOT TO FULL SCALE

PROJECT NO. 400530

95-A-601
SHEET
OF

PLOTTED: 3/16/2020 11:05:50 AM
D400530

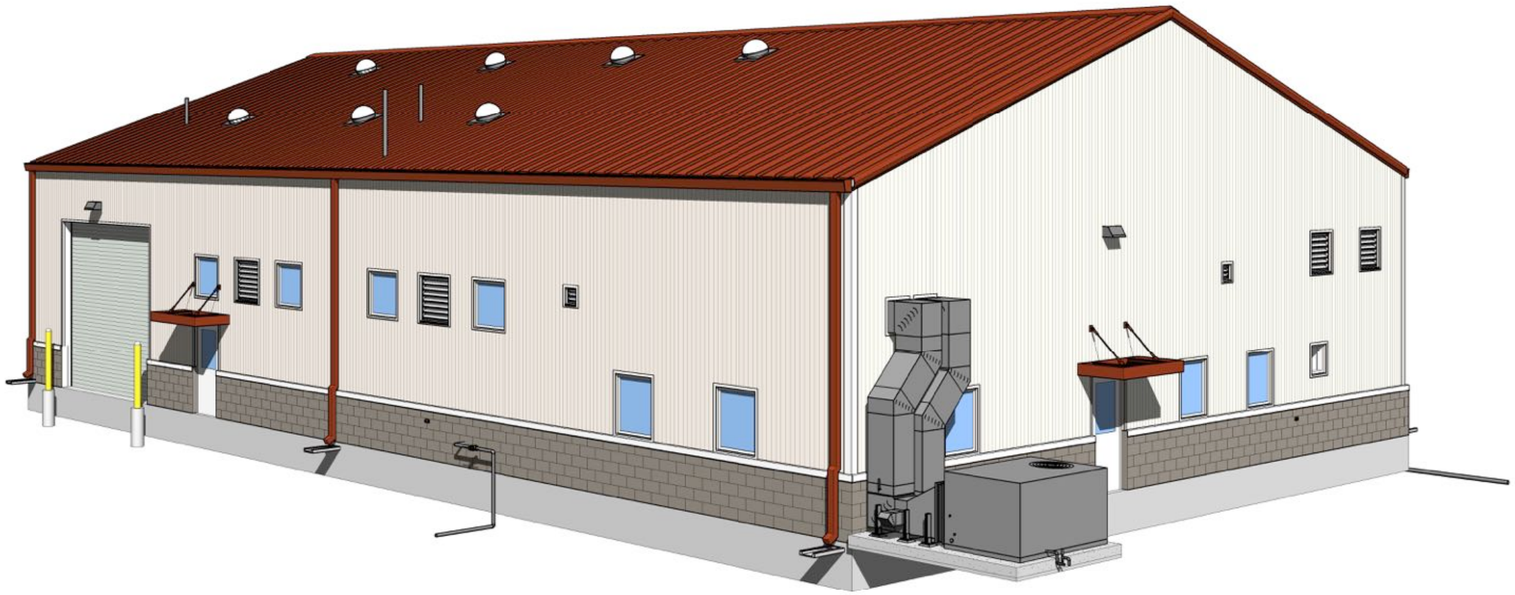

NORTHEAST PERSPECTIVE



SOUTHWEST PERSPECTIVE

90% SUBMITTAL - NOT FOR CONTRUCTION

NO.	BY	CHK	APP	DATE	REVISIONS AND RECORD OF USE
B	BDF	EVB		7/30/2019	60% SUBMITTAL
A	BDF	EVB		3/5/2019	30% SUBMITTAL

LICENSED ARCHITECT
BRUCE DOUGLAS FRASER
C 9787
EXPIRES 12/31/21
STATE OF CALIFORNIA

FRASER SEIPLE ARCHITECTS

JOINT VENTURE

BLACK & VEATCH

FILANC

CITY OF MORRO BAY
MORRO BAY WATER
RECLAMATION FACILITY (WRF)

MAINTENANCE BUILDING
ARCHITECTURAL
PERSPECTIVES

DESIGNED: BDF
DETAILED: ANH
CHECKED: -
APPROVED: -
DATE:

0 1/2 1
IF THIS BAR DOES NOT MEASURE 1" THEN DRAWING IS NOT TO FULL SCALE

PROJECT NO.
400530

96-A-001
SHEET
OF

PLOTTED: 3/17/2020 4:20:12 PM
D400530

STATE OF CALIFORNIA
ENVELOPE COMPONENT APPROACH
CEC-NRCC-ENV-01-E (Revised 01/16) CALIFORNIA ENERGY COMMISSION

CERTIFICATE OF COMPLIANCE	NRCC-ENV-01-E
Envelope Component Approach	Page 1 of 5
Project Name: Morro Bay Water Reclamation Facility Maintenance Building	Date Prepared: March 24, 2020

A. GENERAL INFORMATION

01	Project Location:	555 South Bay Boulevard	06	Compliance Method:	☑ Component ☐ Unconditioned (file Affidavit)
02	CA City and Zip Code:	Morro Bay 93442	07	Building Front Orientation:	East
03	Climate Zone:	5	08	Phase of Construction:	☑ New Construction ☐ Additions ☐ Alteration
04	Total Conditioned Floor Area:	1,126 S.F.	09	Building Occupancy:	☑ Nonresidential ☐ High Rise Residential ☐ Hotel/Motel Guest Room
05	Building Type:	☐ Schools (Public Schools) ☐ Relocatable Public School Building ☑ Conditioned Spaces ☐ Unconditioned Spaces ☐ Skylight Area for Large Enclosed Space > 5000 ft² (If checked, include the NRCC-ENV-04-E with submittal)			

B. ENVELOPE DETAILS - FRAMED

01	02	03	04	05	06	07	08		09	10	11
							Appendix JA4 Reference				
Tag/ID	Assembly Type	Frame Material	Frame Depth	Frame Spacing	Cavity R-value	Continuous Insulation R-value	Table	Cell	Proposed U-Factor	Required U-Factor from Tables 140.3-B, C, or D	Field Inspection Comments
ROOF 01	Roof	Metal	8"	60"	30	NA	4.2.7	F15	0.034	0.041	
ROOF 02	Roof	Metal	8"	60"	24	NA	4.2.7	F15	0.042	0.041	
WALL 05	Wall	Metal	15.75"	24"	21	NA	4.3.3	A26	0.045	0.061	
WALL 06	Wall	Metal	14"	24"	21	NA	4.3.3	A26	0.048	0.061	
PART 10	Wall	Metal	4.875"	24"	13	NA	4.3.3	A26	0.038	0.061	wall between conditioned and tempered spaces

Add Row | Remove Last

C. ENVELOPE DETAILS - NON-FRAMED

01	02	03	04	05	06	07	08	09	10

STATE OF CALIFORNIA
ENVELOPE COMPONENT APPROACH
CEC-NRCC-ENV-01-E (Revised 01/16) CALIFORNIA ENERGY COMMISSION

CERTIFICATE OF COMPLIANCE	NRCC-ENV-01-E
Envelope Component Approach	Page 2 of 5
Project Name: Morro Bay Water Reclamation Facility Maintenance Building	Date Prepared: March 24, 2020

Tag/ID	Assembly Type	Assembly Materials	Thickness (inches)	Interior or Core Insulation R-Value	Continuous Insulation R-Value	Appendix JA4 Reference Table	Appendix JA4 Reference Cell	Proposed U-Factor	Required U-Factor from Tables 140.3-B, C, or D	Field Inspection Comments

Add Row | Remove Last

D. ENVELOPE DETAILS - MASS

01	02	03	04	05	06	07	08		09	10	11
							Appendix JA4 Reference				
Tag/ID	Mass Type	Density (lb/ft³)	Mass Thickness (inches)	Furring Strip Thickness (inches)	Interior Insulation R-Value	Exterior Insulation R-Value	Table	Cell	Proposed U-Factor	Required U-Factor from Tables 140.3-B, C, or D	Field Inspection Comments

Add Row | Remove Last

E. ROOFING PRODUCTS (COOL ROOF)

01	02	03	04	05	06	07	08	09	10	11
				Proposed			Minimum Required			
Mass Roof 25 lb/ft² or Greater	Roof Pitch	CRRC Product ID Number	Product Type	Aged Solar Reflectance[1]	Thermal Emittance	SRI[2] (Optional)	Aged Solar Reflectance	Thermal Emittance	SRI (Optional)	Comments
☐	4:12	BN5R143B	metal	☑ 0.34	0.85		0.63	0.75		

Add Row | Remove Last

- An aged solar reflectance less than 0.63 is allowed provided the maximum roof/ceiling U-factor in TABLE 140.3 is not exceeded	
- High-rise residential buildings and Hotels and Motels with low-sloped roofs in Climate Zones 1 through 8, 12, and 16 are exempted from aged Solar Reflectance and thermal emittance requirements	
- High-rise residential and Hotels/Motels with steep-sloped roofs in Climate Zones 1 and 16 are exempt from aged Solar Reflectance and thermal emittance requirements	
- The roof area covered by building integrated photovoltaic panels and building integrated solar thermal panels are exempt from aged Solar Reflectance and thermal emittance requirements	

STATE OF CALIFORNIA
ENVELOPE COMPONENT APPROACH
CEC-NRCC-ENV-01-E (Revised 01/16) CALIFORNIA ENERGY COMMISSION

CERTIFICATE OF COMPLIANCE	NRCC-ENV-01-E
Envelope Component Approach	Page 3 of 5
Project Name: Morro Bay Water Reclamation Facility Maintenance Building	Date Prepared: March 24, 2020

- To apply Liquid Field Applied Coatings, the coating must be applied across the entire roof surface and meet the dry mil thickness or coverage recommended by the coatings manufacturer and meet minimum performance requirements listed in §110.8(j)4. Select the applicable coating:	
☐ Aluminum-Pigmented Asphalt Roof Coating ☐ Cement-Based Roof Coating ☐ Other	

NOTES:
1. Check the box if the aged Solar Reflectance was not available in the Cool Roof Council's Rated Product Directory, then use the equation in Section 110.8(i)2: Paged = 0.2 + 0.7(Rinitial - 0.2) to obtain a calculated aged solar reflectance value. Where Rinitial is the Initial Solar Reflectance found in the directory and 0.7 is either 0.65 for Field-applied coatings or 0.70 for all other roofing products other than Field-Applied Coating.
2. Calculate the SRI Value by using the SRI-Worksheet and enter the resulting value in the SRI column above and attach a copy of the SRI-Worksheet (NRCC-ENV-03-E) to this compliance document.

F. AIR BARRIER

01	02	03	04	05
Name	Air Barrier Material Type	Air Barrier Assembly Type	Whole Building Air Leakage Testing	Comments

Add Row | Remove Last

G. FENESTRATION PROPOSED AREAS AND EFFICIENCIES

01	02	03	04	05	06	07	08	09	10	11	12
					Proposed						
Tag/ID	Fenestration Type	Surface Area	Orientation	# of Panes	Max U-Factor	Max (R)SHGC	Min VT	Label	Overhang	Condition Status	Comments
WIN 04	projected aluminum window	21.0	North	2	0.48	0.22	0.32	NFRC	no	new	
WIN 05	projected aluminum window	35.5	West	2	0.48	0.22	0.32	NFRC	no	new	

Add Row | Remove Last

STATE OF CALIFORNIA
ENVELOPE COMPONENT APPROACH
CEC-NRCC-ENV-01-E (Revised 01/16) CALIFORNIA ENERGY COMMISSION

CERTIFICATE OF COMPLIANCE	NRCC-ENV-01-E
Envelope Component Approach	Page 4 of 5
Project Name: Morro Bay Water Reclamation Facility Maintenance Building	Date Prepared: March 24, 2020

H. ENVELOPE MANDATORY MEASURES

Indicate location on building plans of Mandatory Envelope Measures Note Block: _____

INSTRUCTIONS TO APPLICANT ENVELOPE COMPLIANCE & WORKSHEETS (check box if worksheet are included)

For detailed instructions on the use of this and all Energy Efficiency Standards compliance documents, please refer to the Energy Commission website.

☑	NRCC-ENV-01-E	Certificate of Compliance. Required on plans for all submittals.
☐	NRCC-ENV-04-E	Use when minimum skylight requirements for large enclosed spaces are required in climate zones 2 through 15. Optional on plans.

STATE OF CALIFORNIA
ENVELOPE COMPONENT APPROACH
CEC-NRCC-ENV-01-E (Revised 01/16) CALIFORNIA ENERGY COMMISSION

CERTIFICATE OF COMPLIANCE	NRCC-ENV-01-E
Envelope Component Approach	Page 5 of 5
Project Name: Morro Bay Water Reclamation Facility Maintenance Building	Date Prepared: March 24, 2020

DOCUMENTATION AUTHOR'S DECLARATION STATEMENT

1. I certify that this Certificate of Compliance documentation is accurate and complete.

Documentation Author Name: Bruce Fraser	Documentation Author Signature: Bruce Fraser — Digitally signed by Bruce Fraser Date: 2020.03.24 09:16:02 -07'00'
Company: Fraser Seiple Architects	Signature Date: March 24, 2020
Address: 971 Osos Street	CEA/HERS Certification Identification (if applicable):
City/State/Zip: San Luis Obispo, CA 93401	Phone: 805 544-6161

RESPONSIBLE PERSON'S DECLARATION STATEMENT

I certify the following under penalty of perjury, under the laws of the State of California:
1. The information provided on this Certificate of Compliance is true and correct.
2. I am eligible under Division 3 of the Business and Professions Code to accept responsibility for the building design or system design identified on this Certificate of Compliance (responsible designer).
3. The energy features and performance specifications, materials, components, and manufactured devices for the building design or system design identified on this Certificate of Compliance conform to the requirements of Title 24, Part 1 and Part 6 of the California Code of Regulations.
4. The building design features or system design features identified on this Certificate of Compliance are consistent with the information provided on other applicable compliance documents, worksheets, calculations, plans and specifications submitted to the enforcement agency for approval with this building permit application.
5. I will ensure that a completed signed copy of this Certificate of Compliance shall be made available with the building permit(s) issued for the building, and made available to the enforcement agency for all applicable inspections. I understand that a completed signed copy of this Certificate of Compliance is required to be included with the documentation the builder provides to the building owner at occupancy.

Responsible Designer Name: Bruce Fraser	Responsible Designer Signature: Bruce Fraser — Digitally signed by Bruce Fraser Date: 2020.03.24 09:16:25 -07'00'
Company: Fraser Seiple Architects	Date Signed: March 24, 2020
Address: 971 Osos Street	License: CA Architect #C9787
City/State/Zip: San Luis Obispo, CA 93401	Phone: 805 544-6161

NO.	BY	CHK	APP	DATE

REVISIONS AND RECORD OF USE

LICENSED ARCHITECT BRUCE DOUGLAS FRASER C 9787 RENEWAL 08-31-21 STATE OF CALIFORNIA

FRASER SEIPLE ARCHITECTS

JOINT VENTURE

BLACK & VEATCH

FILANC

CITY OF MORRO BAY
MORRO BAY WATER
WATER RECLAMATION FACILITY (WRF)

ARCHITECTURAL
MAINTENANCE BUILDING
ENERGY CODE COMPLIANCE

DESIGNED: BDF
DETAILED: SS
CHECKED:
APPROVED:
DATE:

0 1/2 1
IF THIS BAR DOES NOT MEASURE 1" THEN DRAWING IS NOT TO FULL SCALE

PROJECT NO.
400530

96-A-002
SHEET
OF

PLOTTED: 3/27/2020 4:22 PM

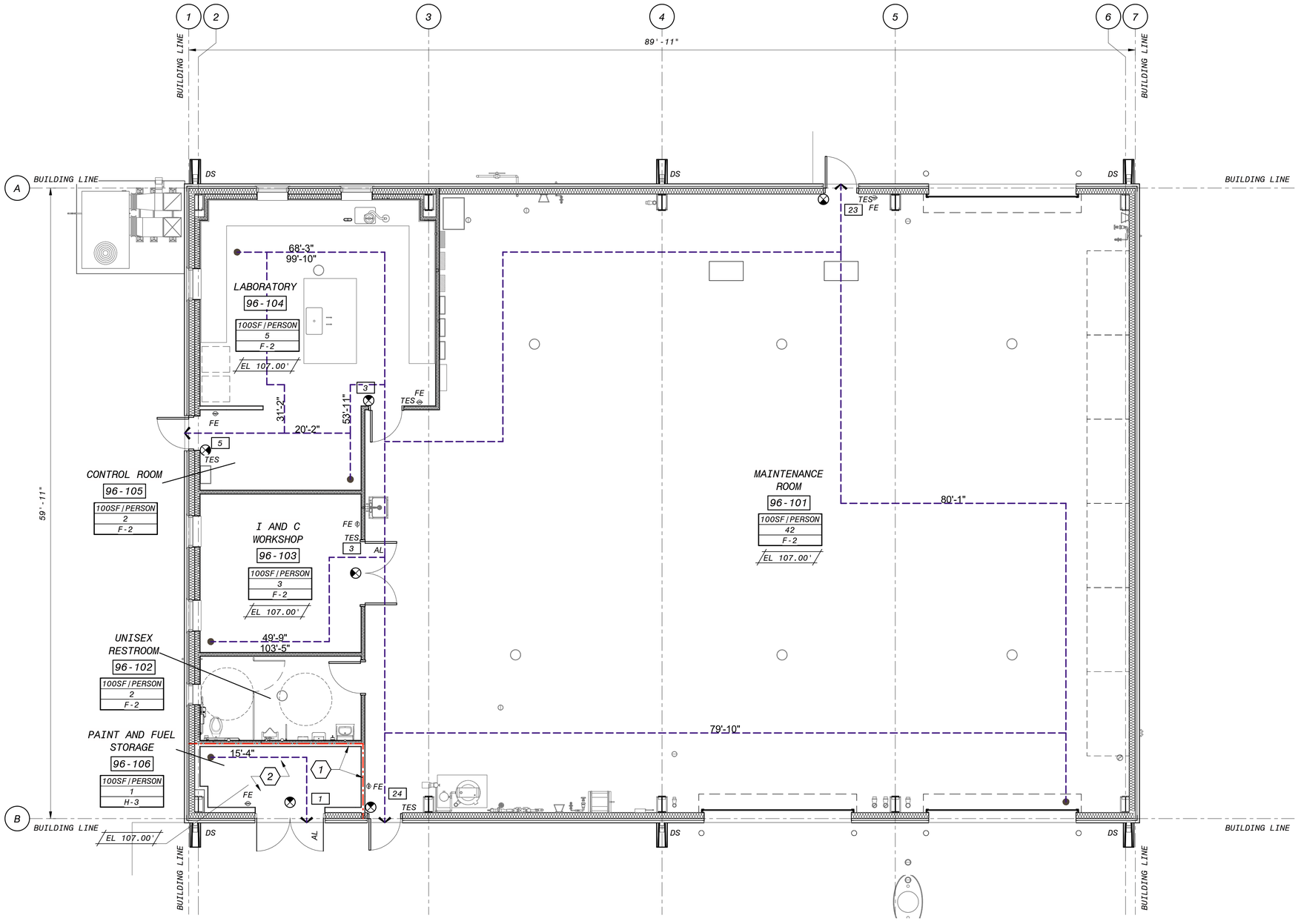

LIFE SAFETY PLAN

3/16" = 1'-0"

GENERAL SHEET NOTES

1. BUILDING CONSTRUTION TYPE IS II-B; OCCUPANCY IS H-3 (HIGH HAZARD) AT PAINT AND FUEL STORAGE, F-2 (LOW HAZARD INDUSTRIAL) ELSEWHERE.
2. WALLS, CEILINGS AND ROOFS NOT OTHERWISE IDENTIFIED ARE NON-FIRE-RATED.

SHEET KEYNOTES

1. 1 HOUR VERTICAL FIRE BARRIER
2. 1 HOUR HORIZONTAL FIRE BARRIER

LIFE SAFETY LEGEND

FE	FIRE EXTINGUISHER (FE)
X'-X" / X'-X"	COMMON PATH OF TRAVEL / PATH OF EGRESS TRAVEL
100SF/PERSON / 10 / F-2	OCCUPANTS PER SF / OCCUPANT LOAD / OCCUPANCY CLASSIFICATION
1	CUMULATIVE OCCUPANT LOAD AT EXIT
	EXIT SYMBOL
TES	TACTILE EXIT SIGN
AL	ACTIVE LEAF
DN	DOWN
DS	DOWNSPOUT

BUILDING CODE ANALYSIS

MAINTENANCE BUILDING	
APPLICABLE BUILDING CODES: 2016 CALIFORNIA BUILDING STANDARDS CODE	
OCCUPANCY	F-2, H-3
ACTUAL FLOOR AREA	5,501 SF TOTAL
ACTUAL HEIGHT	1 STORY (29.17 FT)
TYPE OF CONSTRUCTION	TYPE II-B
ALLOWABLE AREA	92,000 SF
ALLOWABLE HEIGHT	2 STORIES (55 FT)
DESIGN OCCUPANT LOAD	55 PERSONS
ADA ACCESSIBILITY	YES
OCCUPANCY SEPARATION	YES - F-2/H-3 BARRIER
FIRE SPRINKLERS	YES

6" 4' 2' 0' 5' 10'

3/16" = 1'-0"

90% SUBMITTAL - NOT FOR CONTRUCTION

NO.	BY	CHK	APP
B	BDF	EVB	

60% SUBMITTAL — REVISIONS AND RECORD OF USE

DATE: 7/30/2019

LICENSED ARCHITECT — BRUCE DOUGLAS FRASER — C 9787 — STATE OF CALIFORNIA

FRASER SEMPLE ARCHITECTS

JOINT VENTURE

BLACK & VEATCH

FILANC

CITY OF MORRO BAY
MORRO BAY WATER RECLAMATION FACILITY (WRF)

MAINTENANCE BUILDING ARCHITECTURAL
LIFE SAFETY PLAN

DESIGNED: BDF
DETAILED: ANH
CHECKED: -
APPROVED: -
DATE:

0 1/2 1

IF THIS BAR DOES NOT MEASURE 1" THEN DRAWING IS NOT TO FULL SCALE

PROJECT NO. 400530

96-A-101
SHEET
OF

PLOTTED: 3/17/2020 4:20:14 PM
D400530

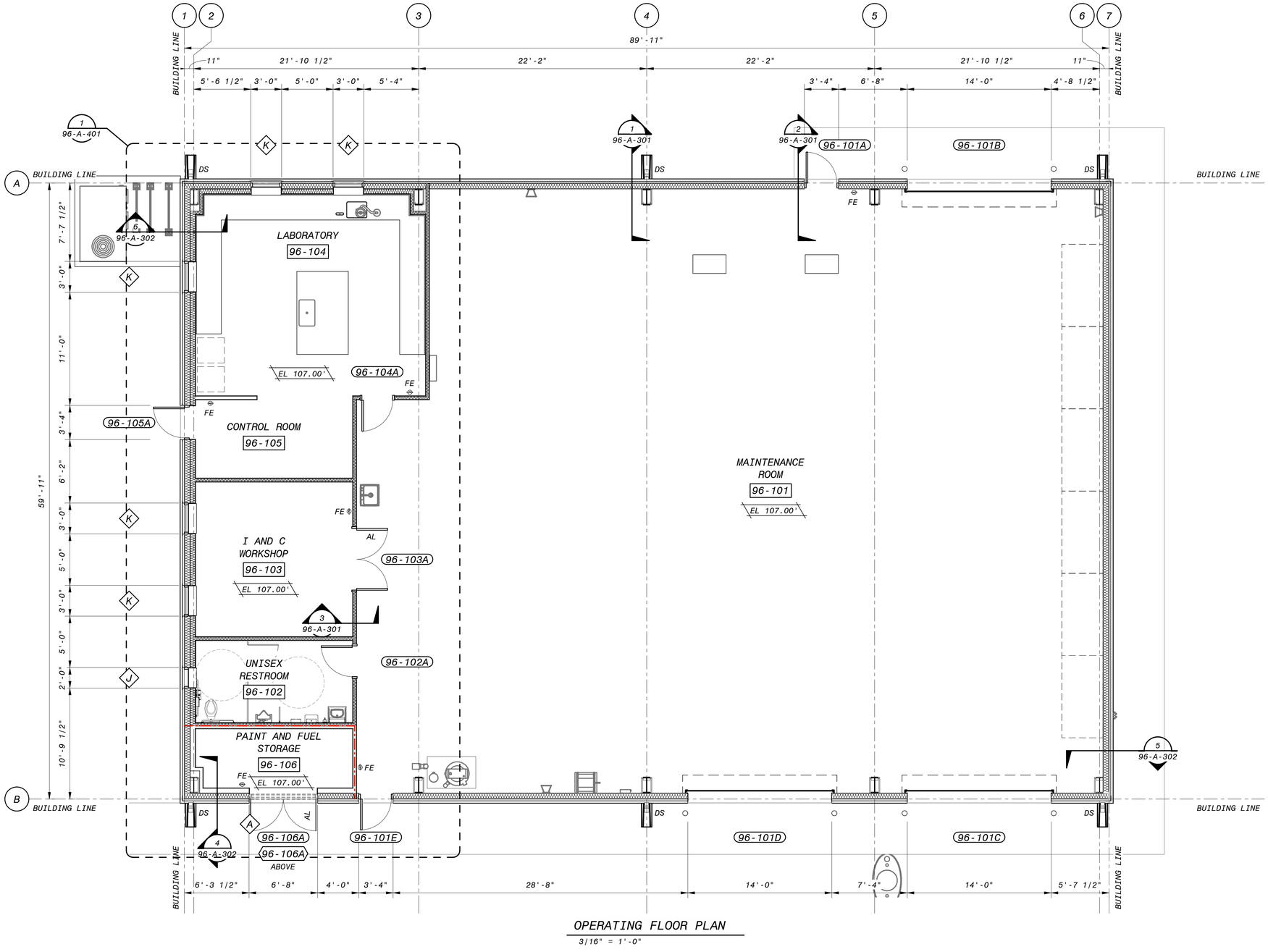

OPERATING FLOOR PLAN

3/16" = 1'-0"

GENERAL SHEET NOTES

SHEET KEYNOTES

LEGEND

X	ACCESSORY ITEM
101A	DOOR
H1	ACCESS HATCH
00	LABORATORY CABINET
101A	LOUVER
A	WALL or WALL PANEL TYPE
W	WINDOW
WS	WINDOW SYSTEM or FRAME TYPE
ROOM NAME 101	ROOM NAME & NUMBER

6" 4' 2' 0' 5' 10'

3/16" = 1'-0"

90% SUBMITTAL - NOT FOR CONTRUCTION

NO.	BY	CHK	APP	DATE	REVISIONS AND RECORD OF USE
B	BDF	BDF	EVB	7/30/2019	60% SUBMITTAL
A	BDF	BDF	EVB	3/5/2019	30% SUBMITTAL

LICENSED ARCHITECT
BRUCE DOUGLAS FRASER
C 9787
STATE OF CALIFORNIA

FRASER SEMPLE ARCHITECTS
JOINT VENTURE
BLACK & VEATCH
FILANC

CITY OF MORRO BAY
MORRO BAY WATER
RECLAMATION FACILITY (WRF)

MAINTENANCE BUILDING
ARCHITECTURAL
OPERATING FLOOR PLAN

DESIGNED: BDF
DETAILED: ANH
CHECKED: -
APPROVED: -
DATE:

0 1/2 1
IF THIS BAR DOES NOT MEASURE 1" THEN DRAWING IS NOT TO FULL SCALE

PROJECT NO.
400530

96-A-102
SHEET
OF

PLOTTED: 3/17/2020 4:20:17 PM
D400530

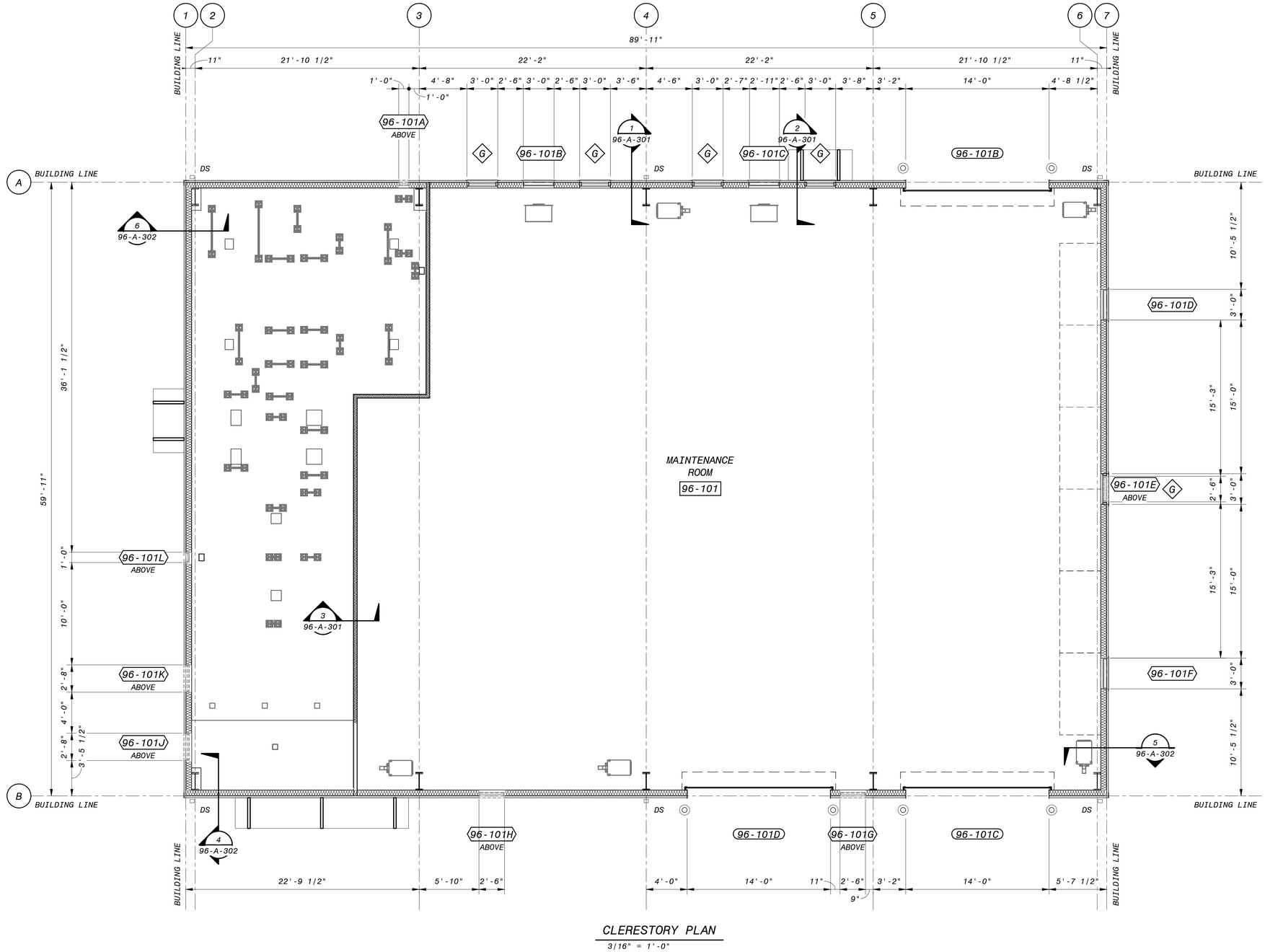

CLERESTORY PLAN

3/16" = 1'-0"

GENERAL SHEET NOTES

SHEET KEYNOTES

NO.	BY	CHK	APP
B	BDF	BDF	EVB

60% SUBMITTAL — REVISIONS AND RECORD OF USE

DATE: 7/30/2019

LICENSED ARCHITECT — BRUCE DOUGLAS FRASER — C 9787 — STATE OF CALIFORNIA

FRASER SEMPLE ARCHITECTS

JOINT VENTURE

BLACK & VEATCH

FILANC

CITY OF MORRO BAY
MORRO BAY WATER
RECLAMATION FACILITY (WRF)

MAINTENANCE BUILDING
ARCHITECTURAL
CLERESTORY PLAN

DESIGNED: BDF
DETAILED: ANH
CHECKED: -
APPROVED: Approver
DATE:

0 1/2 1

IF THIS BAR DOES NOT MEASURE 1" THEN DRAWING IS NOT TO FULL SCALE

PROJECT NO. 400530

96-A-103

SHEET OF

6" 4' 2' 0' 5' 10'

3/16" = 1'-0"

90% SUBMITTAL - NOT FOR CONTRUCTION

PLOTTED: 3/17/2020 4:20:19 PM

D400530

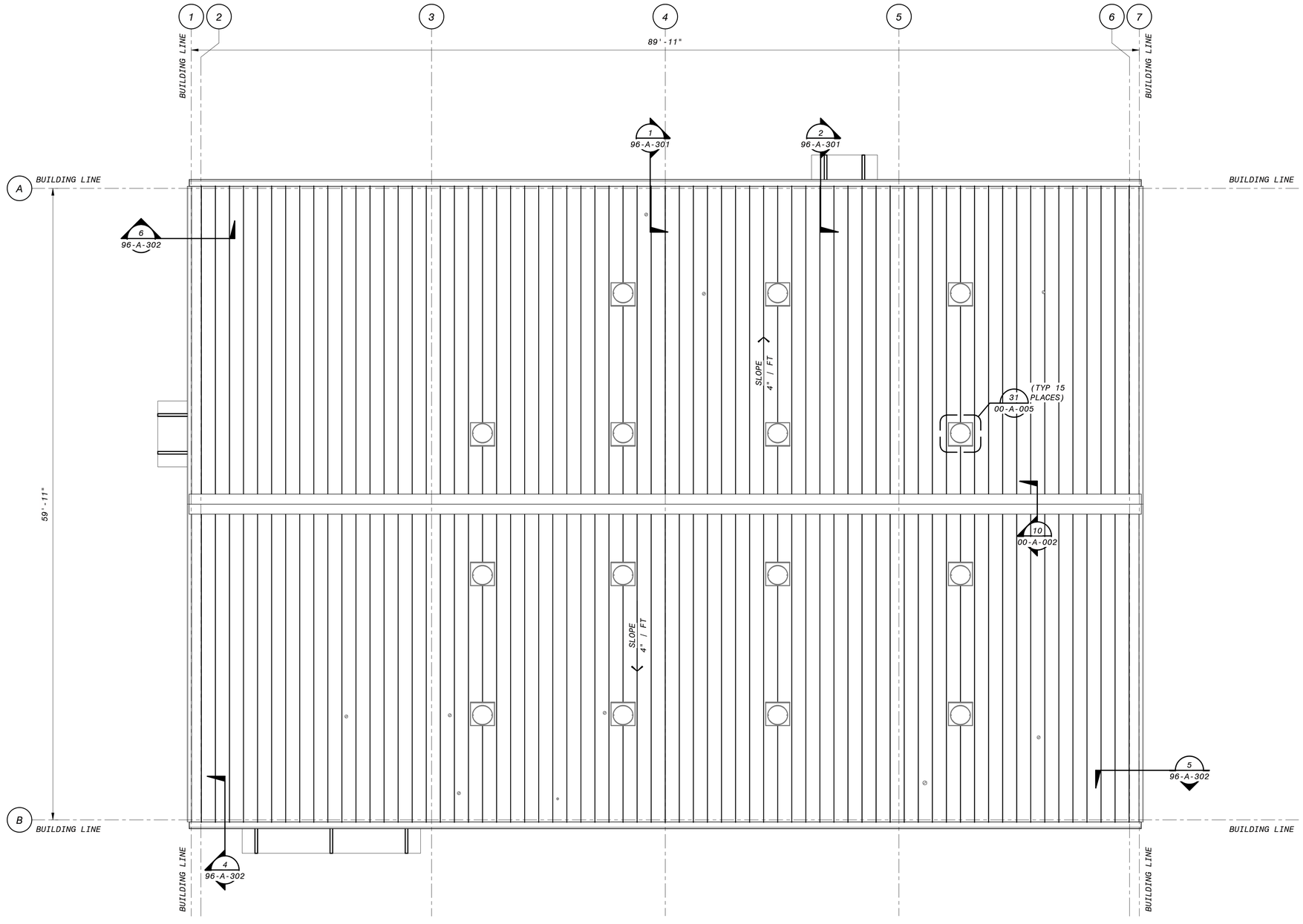

ROOF PLAN

3/16" = 1'-0"

GENERAL SHEET NOTES

SHEET KEYNOTES

6" 4' 2' 0' 5' 10'

3/16" = 1'-0"

90% SUBMITTAL - NOT FOR CONTRUCTION

NO.	BY	CHK	APP
B	BDF	EVB	

60% SUBMITTAL

REVISIONS AND RECORD OF USE

DATE 7/30/2019

LICENSED ARCHITECT
BRUCE DOUGLAS FRASER
C 9787
STATE OF CALIFORNIA

FRASER SEMPLE ARCHITECTS

BLACK & VEATCH

JOINT VENTURE

FILANC

CITY OF MORRO BAY
MORRO BAY WATER
RECLAMATION FACILITY (WRF)

MAINTENANCE BUILDING
ARCHITECTURAL
ROOF PLAN

DESIGNED: BDF
DETAILED: ANH
CHECKED: -
APPROVED: -
DATE:

0 1/2 1

IF THIS BAR DOES NOT MEASURE 1" THEN DRAWING IS NOT TO FULL SCALE

PROJECT NO.
400530

96-A-104
SHEET
OF

PLOTTED: 3/17/2020 4:20:20 PM
D400530

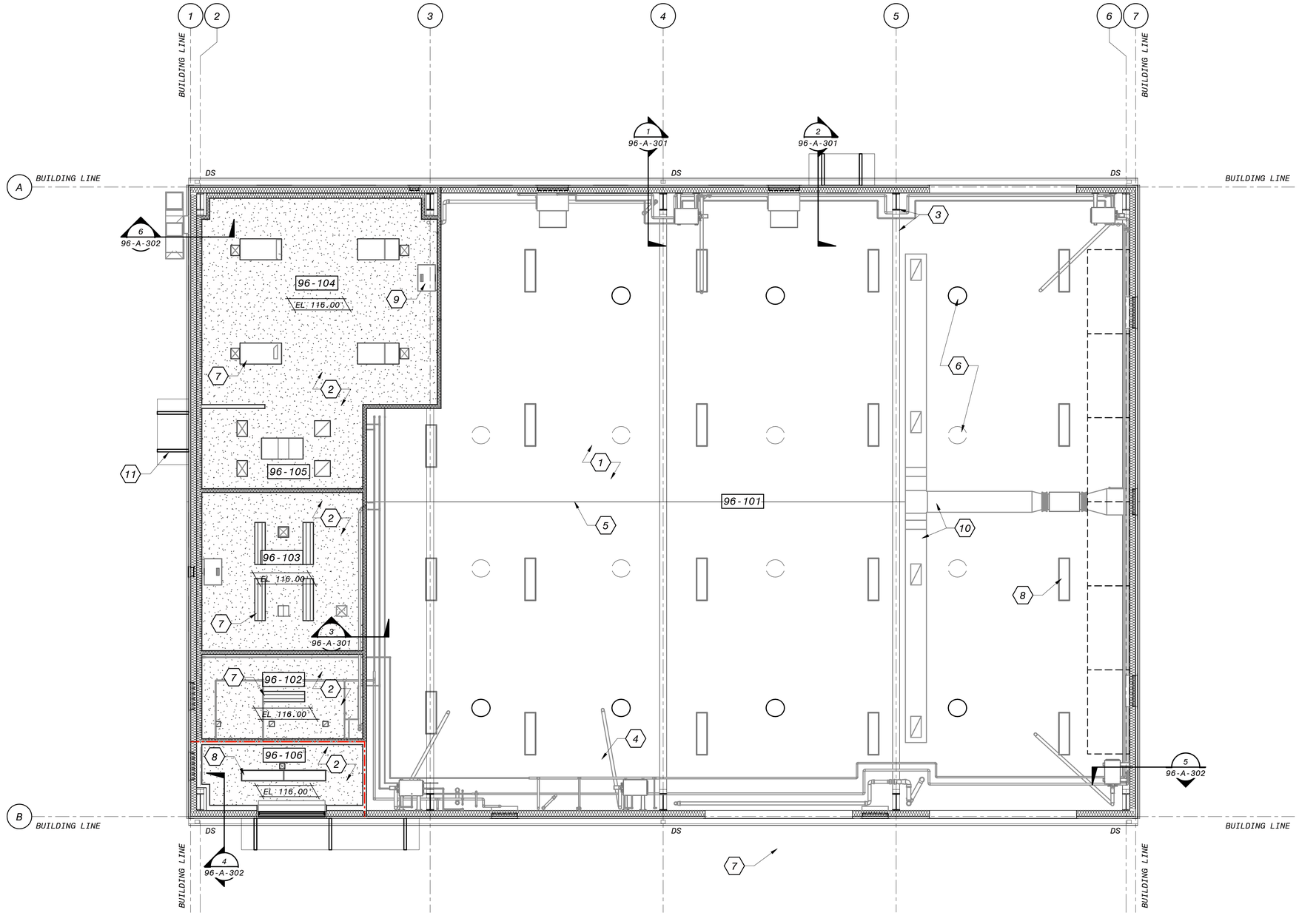

REFLECTED CEILING PLAN

3/16" = 1'-0"

GENERAL SHEET NOTES

SHEET KEYNOTES

1. EXPOSED INSULATION LINER AT ROOF ABOVE
2. PAINTED GYPSUM CEILING
3. PRE-ENGINEERED FRAME (TYP)
4. BRIDGE CRANE TRACK (TYP)
5. RIDGE LINE ABOVE
6. SKYLIGHT ABOVE (TYP)
7. SURFACE LIGHT FIXTURE
8. SUSPENDED LIGHT FIXTURE (TYP)
9. FUME HOOD EXHAUST DUCT
10. EXHAUST AIR DUCT ABOVE
11. METAL WALK DOOR CANOPY (TYP)

CEILING PLAN LEGEND

LIGHT FIXTURES

EXHAUST DIFFUSER OR RETURN DIFFUSER

SUPPLY DIFFUSER

6" 4' 2' 0' 5' 10'

3/16" = 1'-0"

90% SUBMITTAL - NOT FOR CONTRUCTION

NO.	BY	CHK	APP
B	BDF	BDF	EVB

7/30/2019 DATE — 60% SUBMITTAL — REVISIONS AND RECORD OF USE

LICENSED ARCHITECT BRUCE DOUGLAS FRASER C 9787 STATE OF CALIFORNIA

FRASER SEMPLE ARCHITECTS

JOINT VENTURE

BLACK & VEATCH

FILANC

CITY OF MORRO BAY
MORRO BAY WATER
RECLAMATION FACILITY (WRF)

MAINTENANCE BUILDING
ARCHITECTURAL
REFLECTED CEILING PLAN

DESIGNED: BDF
DETAILED: ANH
CHECKED: -
APPROVED: -
DATE:

0 1/2 1
IF THIS BAR DOES NOT MEASURE 1" THEN DRAWING IS NOT TO FULL SCALE

PROJECT NO.
400530

96-A-105
SHEET
OF

PLOTTED: 3/17/2020 4:20:23 PM
D400530

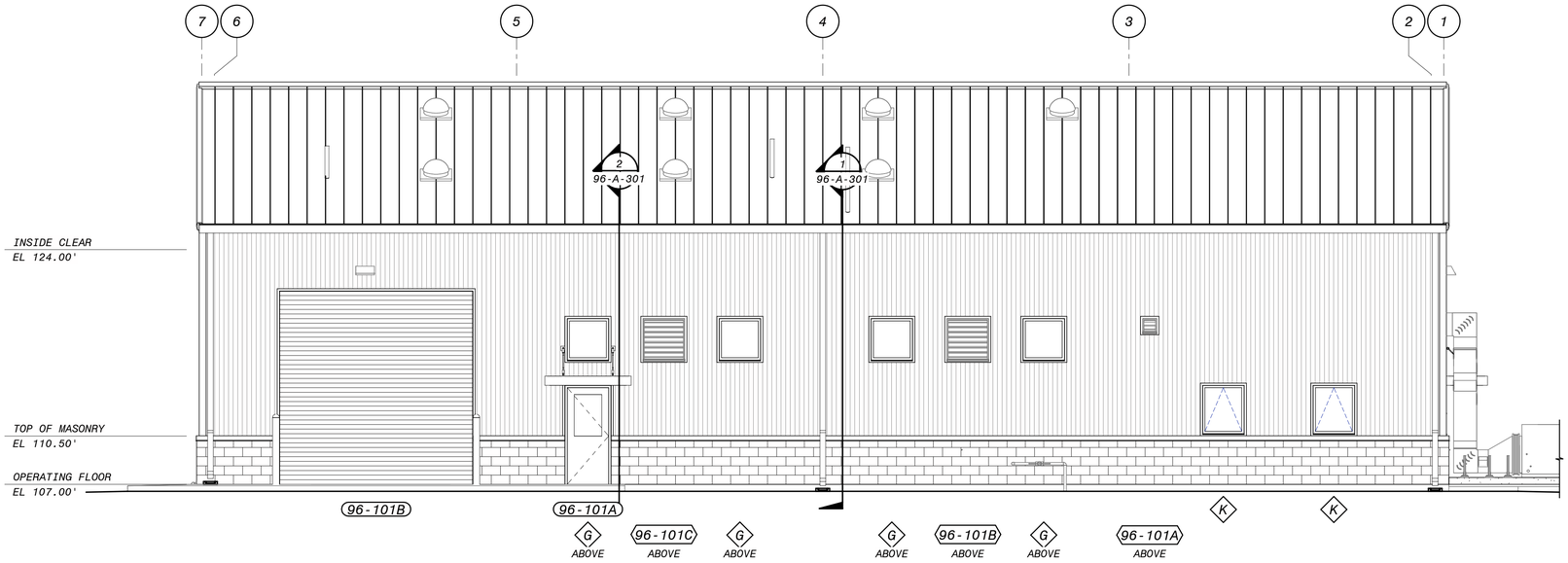

NORTH ELEVATION

3/16" = 1'-0"

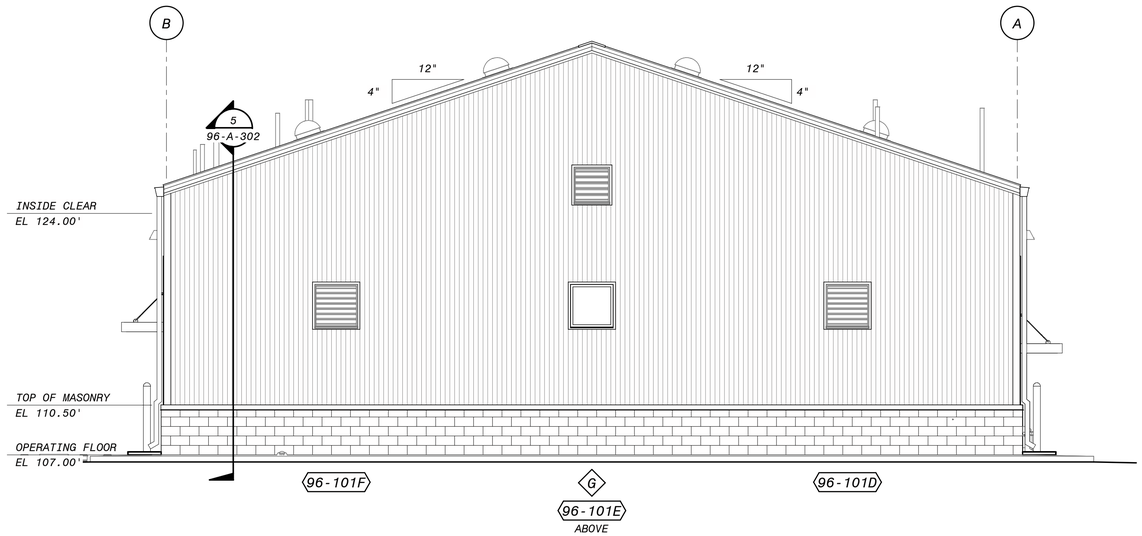

EAST ELEVATION

3/16" = 1'-0"

GENERAL SHEET NOTES

SHEET KEYNOTES

6" 4' 2' 0' 5' 10'

3/16" = 1'-0"

90% SUBMITTAL - NOT FOR CONTRUCTION

NO.	BY	CHK	APP	DATE	REVISIONS AND RECORD OF USE
B	BDF	BDF	EVB	7/30/2019	60% SUBMITTAL
A	BDF	BDF	EVB	3/5/2019	30% SUBMITTAL

LICENSED ARCHITECT
BRUCE DOUGLAS FRASER
C 9787
STATE OF CALIFORNIA

FRASER SEMPLE ARCHITECTS
JOINT VENTURE
BLACK & VEATCH
FILANC

CITY OF MORRO BAY
MORRO BAY WATER
RECLAMATION FACILITY (WRF)

MAINTENANCE BUILDING
ARCHITECTURAL
ELEVATIONS

DESIGNED: BDF
DETAILED: ANH
CHECKED: -
APPROVED: -
DATE:

0 1/2 1
IF THIS BAR DOES NOT MEASURE 1" THEN DRAWING IS NOT TO FULL SCALE

PROJECT NO.
400530

96-A-201
SHEET
OF

PLOTTED: 3/17/2020 4:20:26 PM
D400530

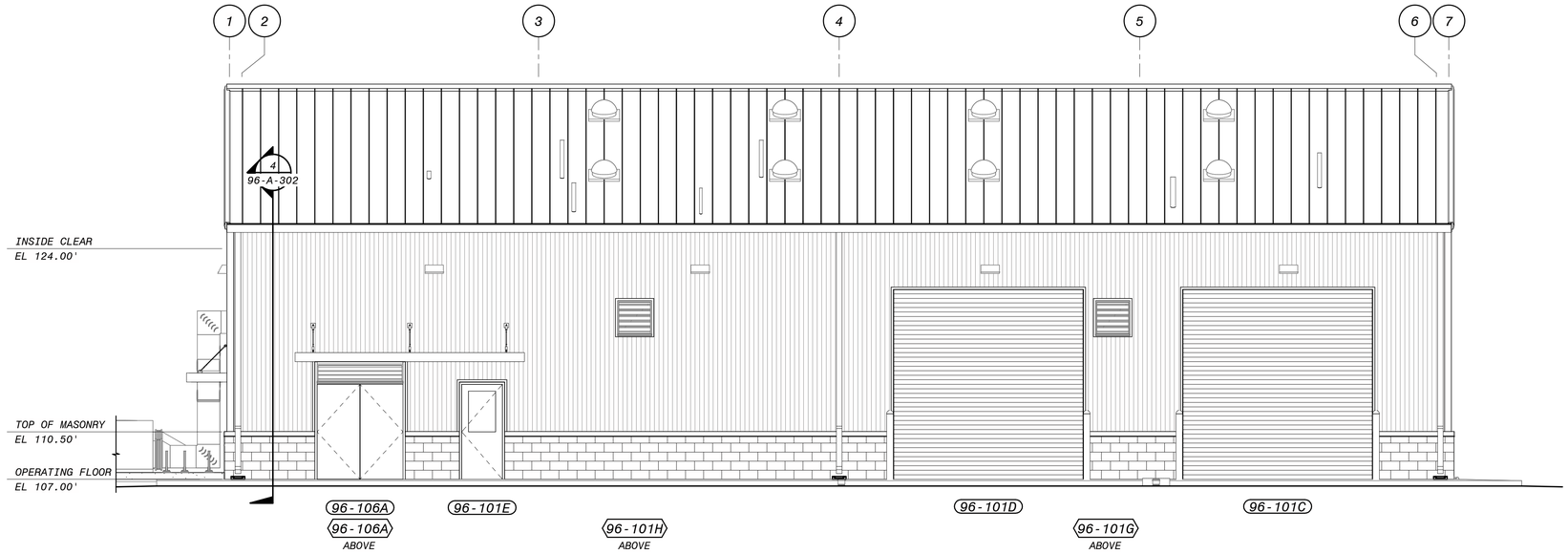

SOUTH ELEVATION

3/16" = 1'-0"

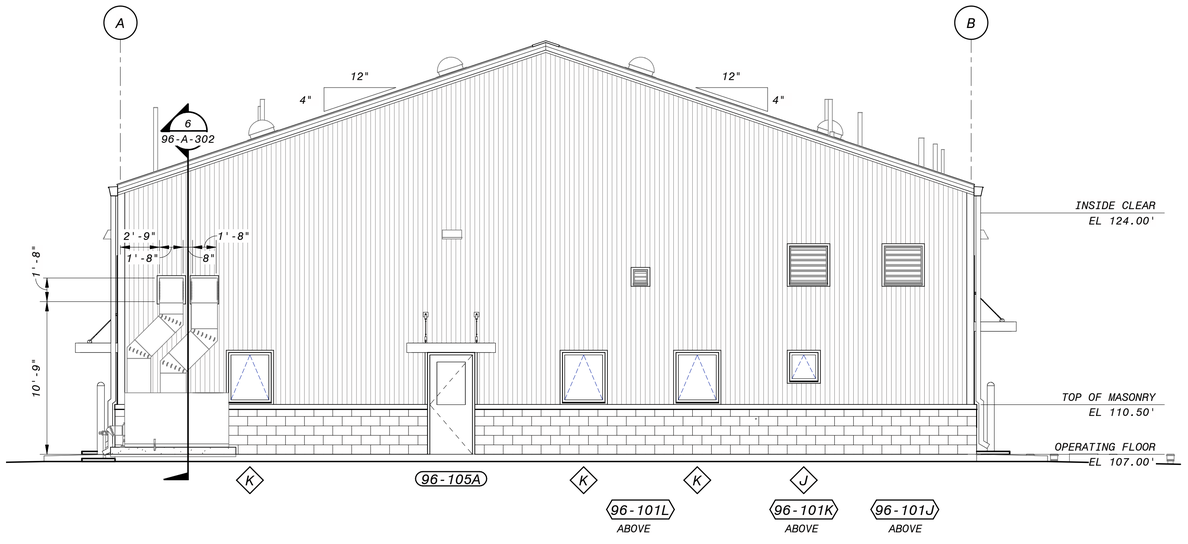

WEST ELEVATION

3/16" = 1'-0"

GENERAL SHEET NOTES

SHEET KEYNOTES

6" 4' 2' 0' 5' 10'

3/16" = 1'-0"

90% SUBMITTAL - NOT FOR CONTRUCTION

NO.	BY	CHK	APP
B	BDF	EVB	

DATE	REVISIONS AND RECORD OF USE
7/30/2019	60% SUBMITTAL

LICENSED ARCHITECT
BRUCE DOUGLAS FRASER
C 9787
EXPIRES 12/31/21
STATE OF CALIFORNIA

FRASER SEIPLE ARCHITECTS

JOINT VENTURE

BLACK & VEATCH

FILANC

CITY OF MORRO BAY
MORRO BAY WATER
RECLAMATION FACILITY (WRF)

MAINTENANCE BUILDING
ARCHITECTURAL
ELEVATIONS

DESIGNED: BDF
DETAILED: ANH
CHECKED: -
APPROVED: -
DATE:

0 1/2 1

IF THIS BAR DOES NOT MEASURE 1" THEN DRAWING IS NOT TO FULL SCALE

PROJECT NO.
400530

96-A-202
SHEET
OF

PLOTTED: 3/17/2020 4:20:30 PM
D400530

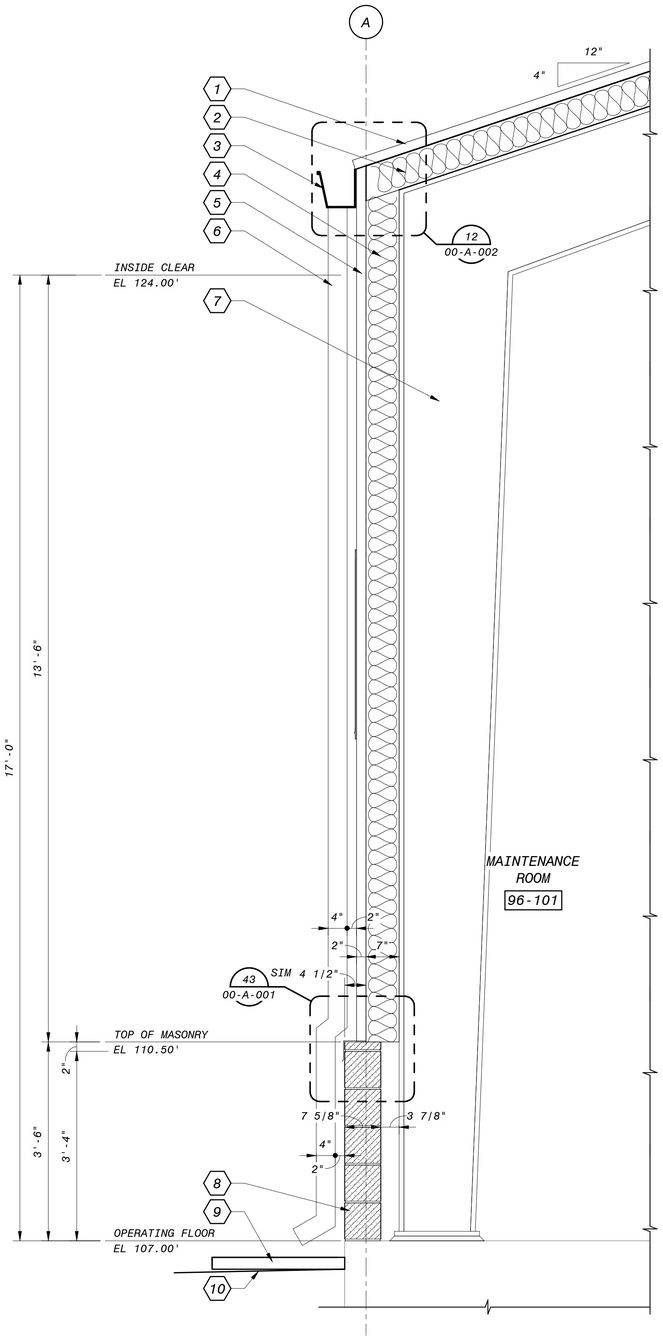

1 SECTION
96-A-102 3/4" = 1'-0"

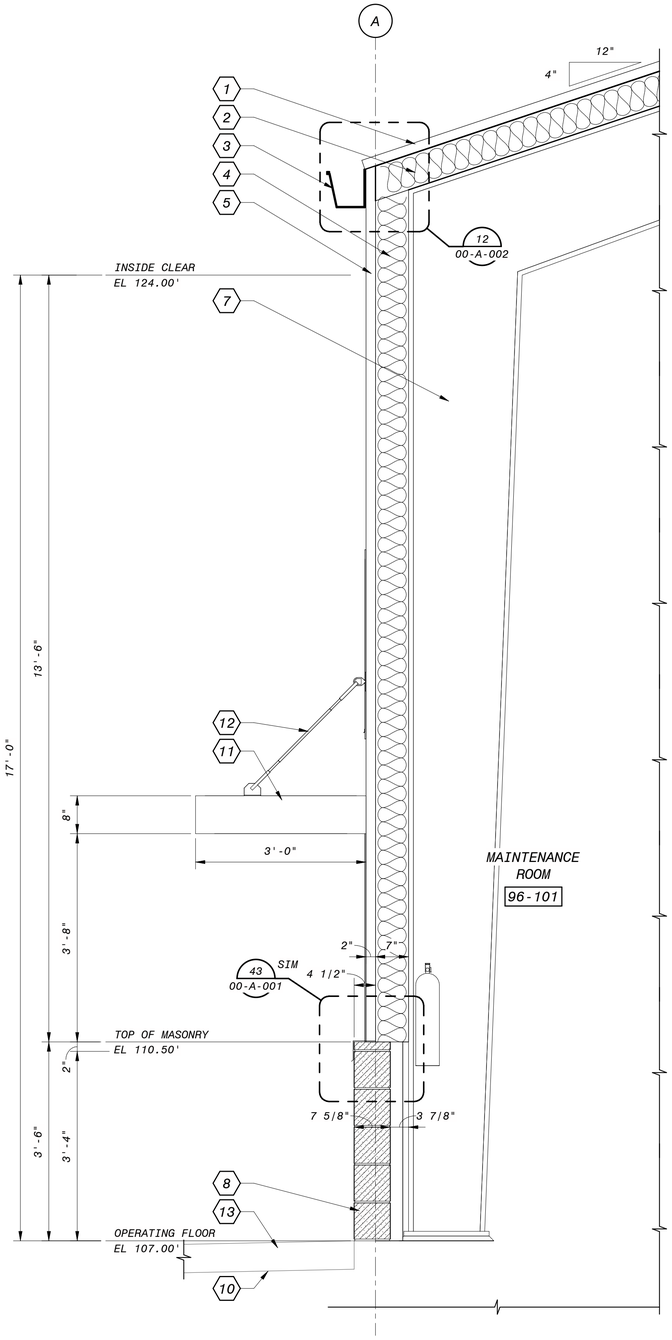

2 SECTION
96-A-102 3/4" = 1'-0"

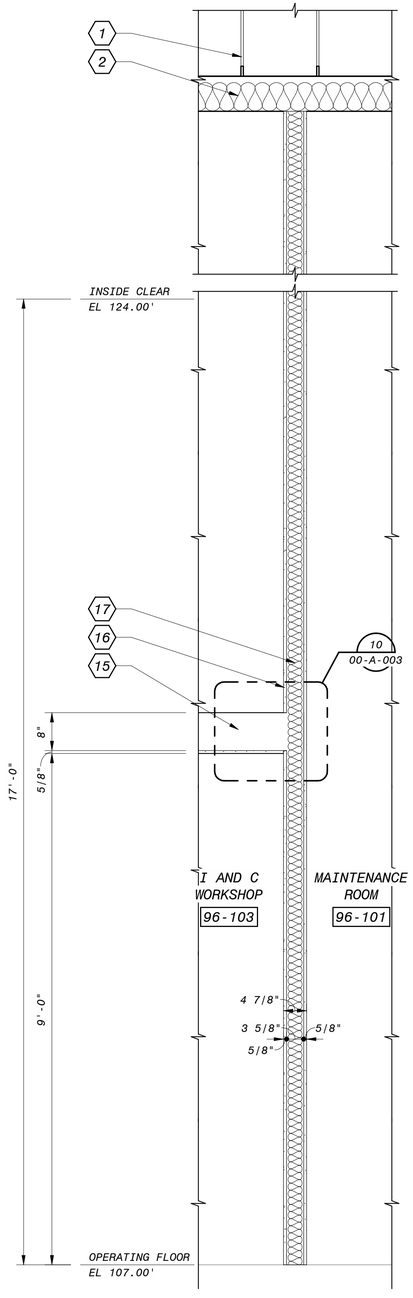

3 SECTION
96-A-102 3/4" = 1'-0"

GENERAL SHEET NOTES

1. FOR VERTICAL REINFORCING AND BOND BEAMS IN MASONRY DESIGN - SEE STRUCTURAL DRAWINGS
2. FOR HORIZONTAL JOINT REINFORCING - SEE SPECIFICATION SECTION 04200

SHEET KEYNOTES

1. METAL ROOFING PANELS
2. PURLIN SPACE WITH PINCH INSULATION
3. PRE-FINISHED METAL FASCIA GUTTER
4. WALL GIRT SPACE WITH PINCH INSULATION
5. PRE-FINISHED RIBBED METAL SIDING
6. PRE-FINISHED METAL DOWNSPOUT
7. PRE-ENGINEERED FRAME PER METAL BUILDING MANUFACTURER
8. BURNISHED 8X8X16 CONCRETE BLOCK
9. PRECAST CONCRETE SPLASH BLOCK
10. FINISHED GRADE
11. METAL CANOPY PER METAL BUILDING MANUFACTURER
12. CANOPY SUSPENSION RODS
13. PAVEMENT - SEE CIVIL DRAWINGS
14. NOT USED
15. METAL C-JOIST CEILING FRAMING WITH GYPSUM BOARD
16. METAL STUD WALL FRAMING WITH GYPSUM BOARD
17. FIBERGLASS BATT INSULATION

NO.	BY	CHK	APP
B	BDF	EVB	

60% SUBMITTAL — REVISIONS AND RECORD OF USE

DATE: 7/30/2019

LICENSED ARCHITECT
BRUCE DOUGLAS FRASER
C 9787
STATE OF CALIFORNIA

FRASER SEMPLE ARCHITECTS
JOINT VENTURE
BLACK & VEATCH
FILANC

CITY OF MORRO BAY
MORRO BAY WATER
RECLAMATION FACILITY (WRF)

MAINTENANCE BUILDING
ARCHITECTURAL
WALL SECTIONS

DESIGNED: BDF
DETAILED: ANH
CHECKED: -
APPROVED: -
DATE:

0 1/2 1
IF THIS BAR DOES NOT MEASURE 1" THEN DRAWING IS NOT TO FULL SCALE

PROJECT NO.
400530

96-A-301
SHEET
OF

12" 6" 0' 1' 2' 3'
3/4" = 1'-0"

90% SUBMITTAL - NOT FOR CONTRUCTION

PLOTTED: 3/17/2020 4:20:31 PM
D400530

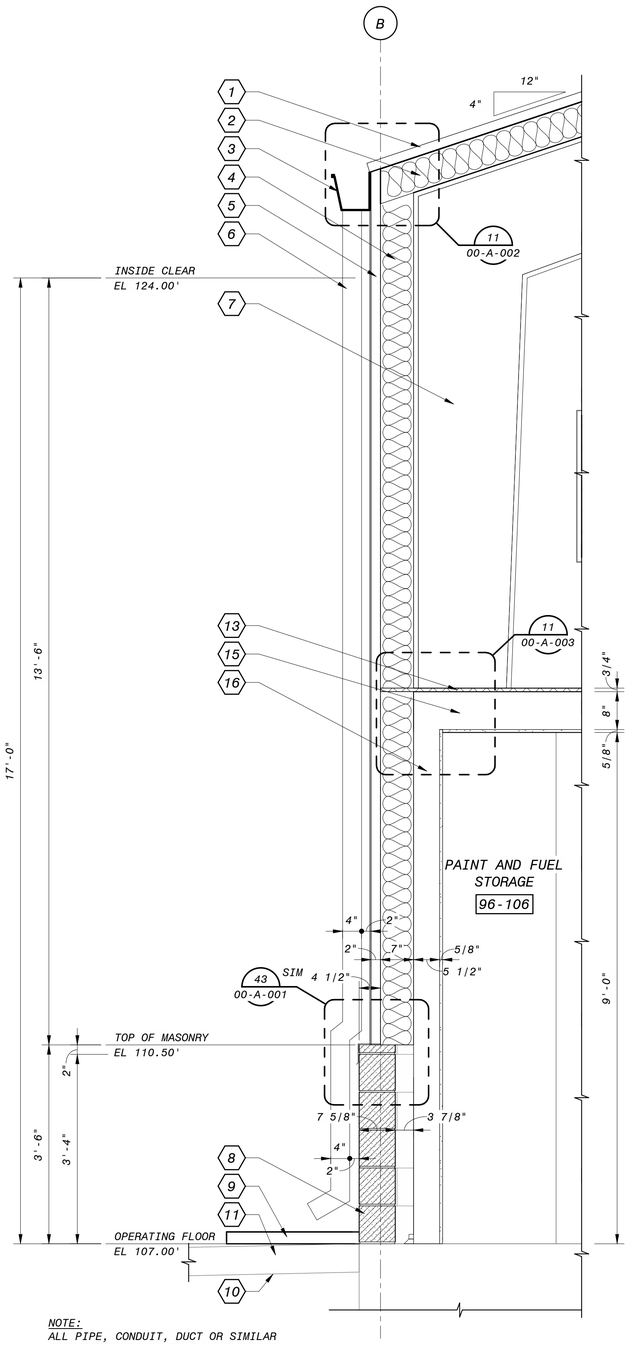

NOTE:
ALL PIPE, CONDUIT, DUCT OR SIMILAR PENETRATIONS THROUGH 2-HOUR RATED WALL OR CEILING ASSEMBLIES SHALL COMPLY WITH THE APPLICABLE DETAIL ON SHEET 00-A-003

4 SECTION
96-A-102 3/4" = 1'-0"

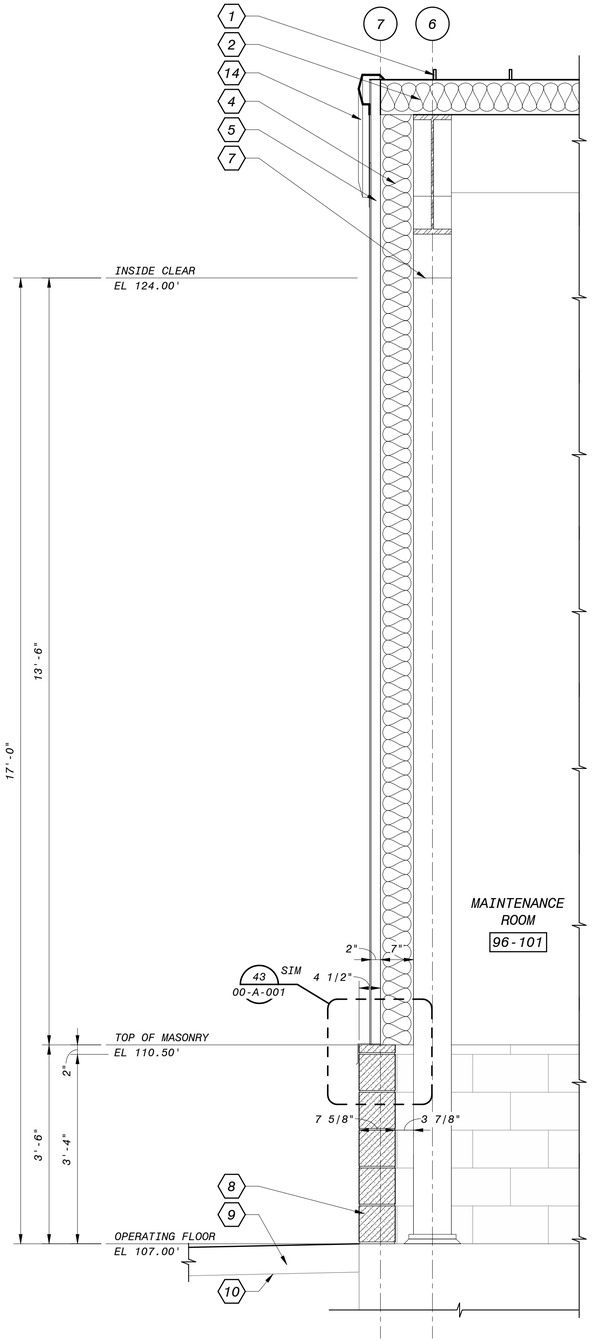

5 SECTION
96-A-102 3/4" = 1'-0"

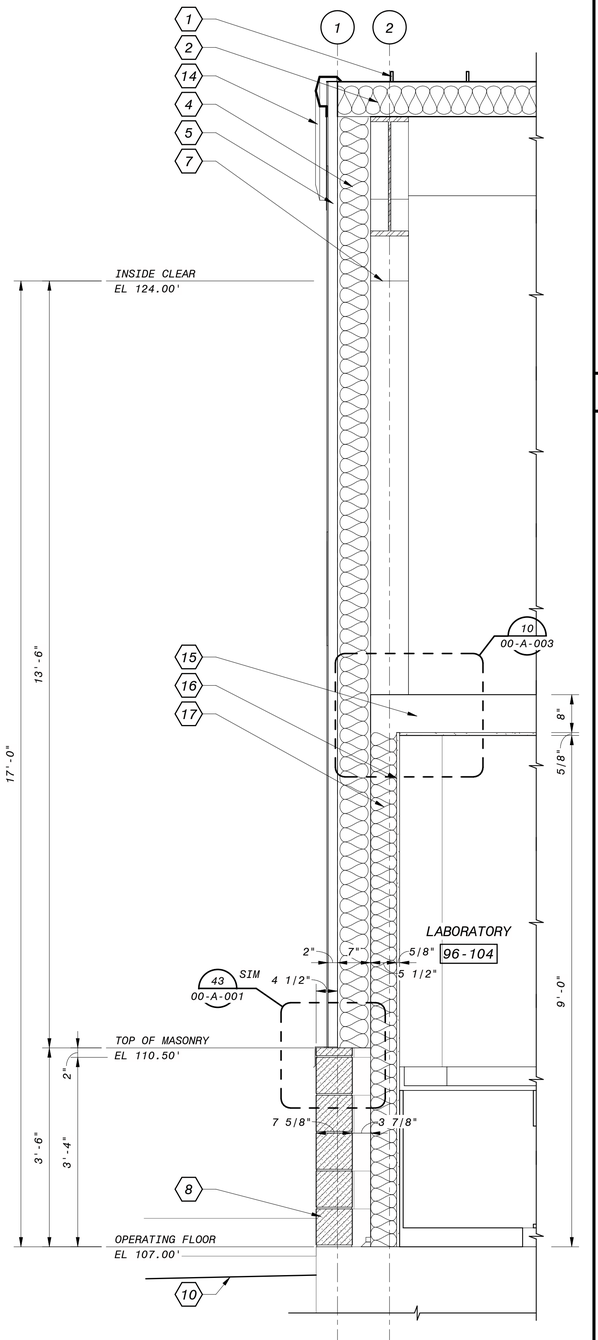

6 SECTION
96-A-102 3/4" = 1'-0"

12" 6" 0' 1' 2' 3'
3/4" = 1'-0"

90% SUBMITTAL - NOT FOR CONTRUCTION

GENERAL SHEET NOTES

1. FOR VERTICAL REINFORCING AND BOND BEAMS IN MASONRY DESIGN - SEE STRUCTURAL DRAWINGS
2. FOR HORIZONTAL JOINT REINFORCING - SEE SPECIFICATION SECTION 04200

SHEET KEYNOTES

1. METAL ROOFING PANELS
2. PURLIN SPACE WITH PINCH INSULATION
3. PRE-FINISHED METAL FASCIA GUTTER
4. WALL GIRT SPACE WITH PINCH INSULATION
5. PRE-FINISHED RIBBED METAL SIDING
6. PRE-FINISHED METAL DOWNSPOUT
7. PRE-ENGINEERED FRAME PER METAL BUILDING MANUFACTURER
8. BURNISHED 8X8X16 CONCRETE BLOCK
9. PRECAST CONCRETE SPLASH BLOCK
10. FINISHED GRADE
11. PAVEMENT - SEE CIVIL DRAWINGS
12. NOT USED
13. CEMENT PANELS AT 1-HOUR CEILING EXTENDED TO METAL SIDING
14. PRE-FINISHED METAL RAKE TRIM
15. METAL C-JOIST CEILING FRAMING WITH GYPSUM BOARD
16. METAL STUD WALL FRAMING WITH GYPSUM BOARD
17. FIBERGLASS BATT INSULATION

NO.	BY	CHK	APP
B	BDF	EVB	

60% SUBMITTAL
REVISIONS AND RECORD OF USE
DATE 7/30/2019

LICENSED ARCHITECT
BRUCE DOUGLAS FRASER
C 9787
STATE OF CALIFORNIA

FRASER SEMPLE ARCHITECTS
BLACK & VEATCH
JOINT VENTURE
FILANC

CITY OF MORRO BAY
MORRO BAY WATER
RECLAMATION FACILITY (WRF)

MAINTENANCE BUILDING
ARCHITECTURAL
WALL SECTIONS

DESIGNED: BDF
DETAILED: ANH
CHECKED: -
APPROVED: -
DATE:

0 1/2 1
IF THIS BAR DOES NOT MEASURE 1" THEN DRAWING IS NOT TO FULL SCALE

PROJECT NO.
400530

96-A-302
SHEET
OF

PLOTTED: 3/17/2020 4:20:33 PM
D400530

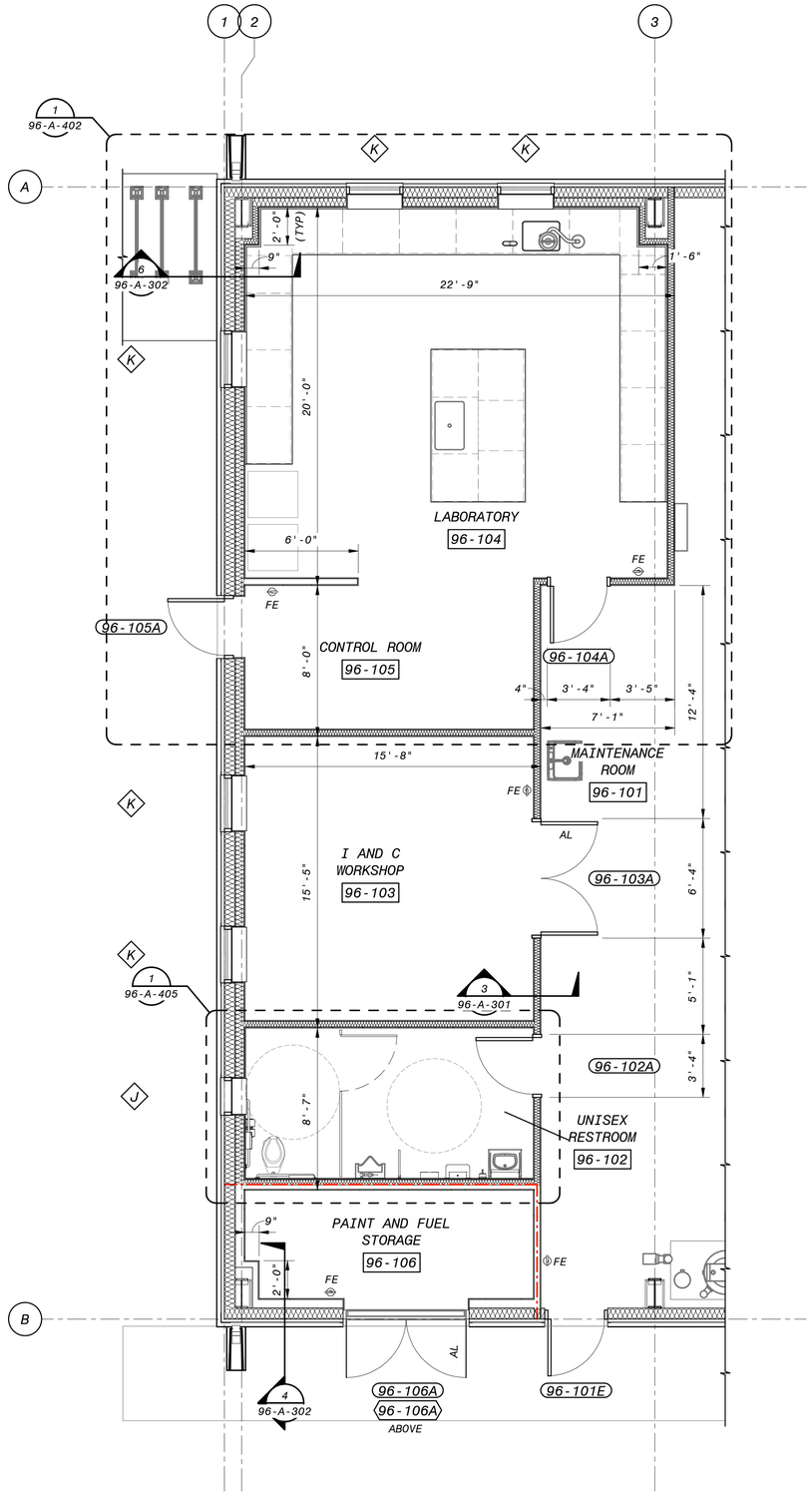

1 ENLARGED - OPERATING FLOOR PLAN
96-A-102 1/4" = 1'-0"

GENERAL SHEET NOTES

SHEET KEYNOTES

6" 4' 2' 0' 5' 10'
3/16" = 1'-0"

90% SUBMITTAL - NOT FOR CONTRUCTION

NO.	BY	CHK	APP
B	BDF	EVB	

60% SUBMITTAL
REVISIONS AND RECORD OF USE
DATE 7/30/2019

LICENSED ARCHITECT
BRUCE DOUGLAS FRASER
C 9787
STATE OF CALIFORNIA

FRASER SEMPLE ARCHITECTS
JOINT VENTURE
BLACK & VEATCH
FILANC

CITY OF MORRO BAY
MORRO BAY WATER
RECLAMATION FACILITY (WRF)

MAINTENANCE BUILDING
ARCHITECTURAL
INTERMEDIATE FLOOR PLAN

DESIGNED: BDF
DETAILED: ANH
CHECKED: -
APPROVED: -
DATE:

0 1/2 1
IF THIS BAR DOES NOT MEASURE 1" THEN DRAWING IS NOT TO FULL SCALE

PROJECT NO.
400530

96-A-401
SHEET
OF

PLOTTED: 3/17/2020 4:20:34 PM
D400530

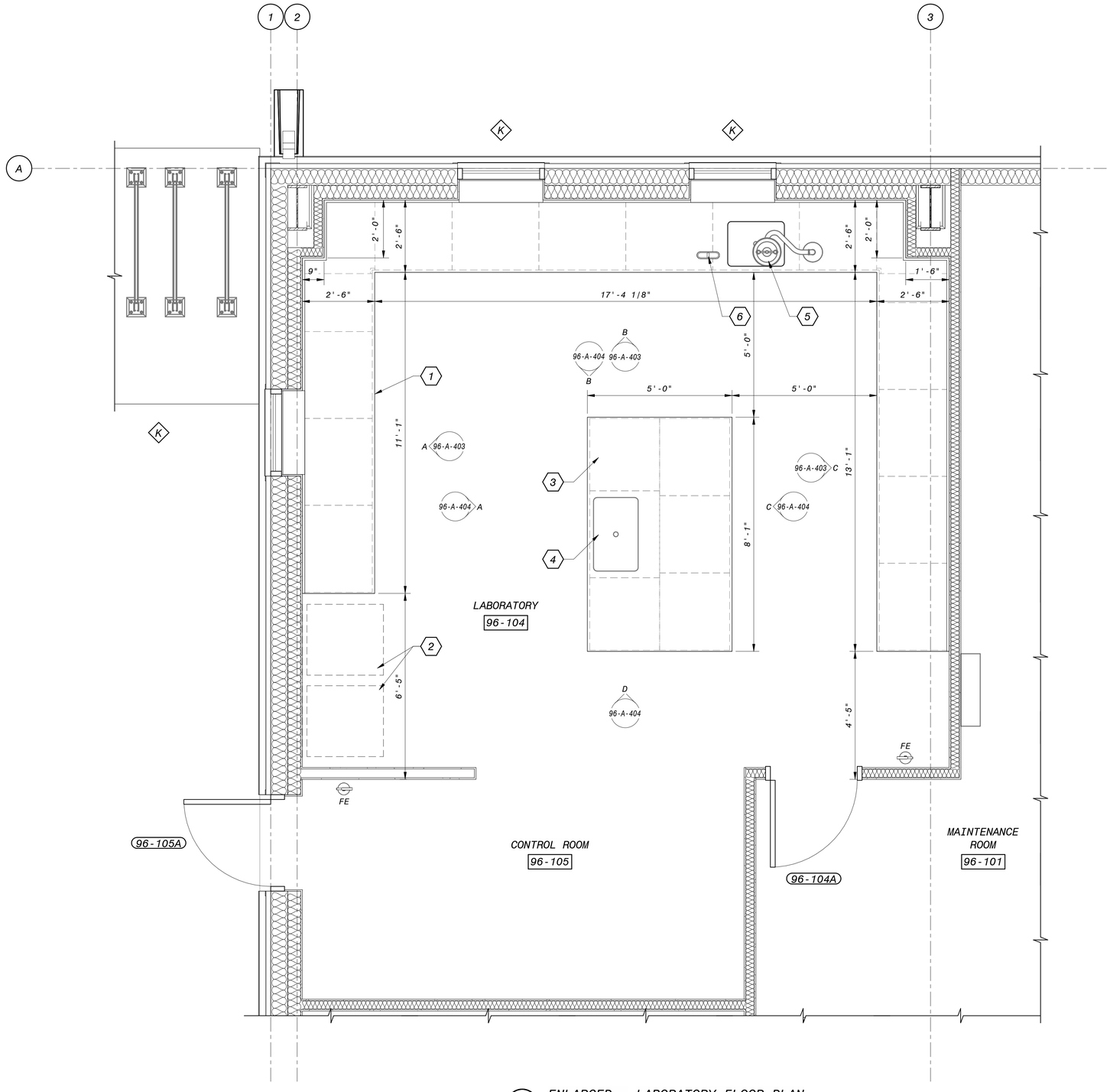

1 ENLARGED - LABORATORY FLOOR PLAN
96-A-401 1/2" = 1'-0"

GENERAL SHEET NOTES

SHEET KEYNOTES

1. 1" THICK LAB TOP - 30" DEEP (TYP)
2. REFRIGERATORS (NIC)
3. 1" THICK LAB TOP AT ISLAND
4. 30-1/2"x18-1/2"x11-1/2"D STAINLESS STEEL UNDERMOUNT SINK
5. 23-1/2"x18-1/2"x7-1/2"D STAINLESS STEEL UNDERMOUNT SINK
6. COUNTERTOP EYEWASH

12' 6' 0' 1' 2' 3' 4' 5'
1/2" = 1'-0"

90% SUBMITTAL - NOT FOR CONTRUCTION

NO.	BY	CHK	APP	DATE	REVISIONS AND RECORD OF USE

LICENSED ARCHITECT
BRUCE DOUGLAS FRASER
C 9787
REGISTERED PROFESSIONAL
STATE OF CALIFORNIA

FRASER SEMPLE ARCHITECTS
JOINT VENTURE
BLACK & VEATCH
FILANC

CITY OF MORRO BAY
MORRO BAY WATER
RECLAMATION FACILITY (WRF)

MAINTENANCE BUILDING
ARCHITECTURAL
ENLARGED LABORITORY PLAN AND ELEVATIONS

DESIGNED: BDF
DETAILED: ANH
CHECKED: -
APPROVED: -
DATE:

0 1/2 1
IF THIS BAR DOES NOT MEASURE 1" THEN DRAWING IS NOT TO FULL SCALE

PROJECT NO.
400530

96-A-402
SHEET
OF

PLOTTED: 3/17/2020 4:20:35 PM
D400530

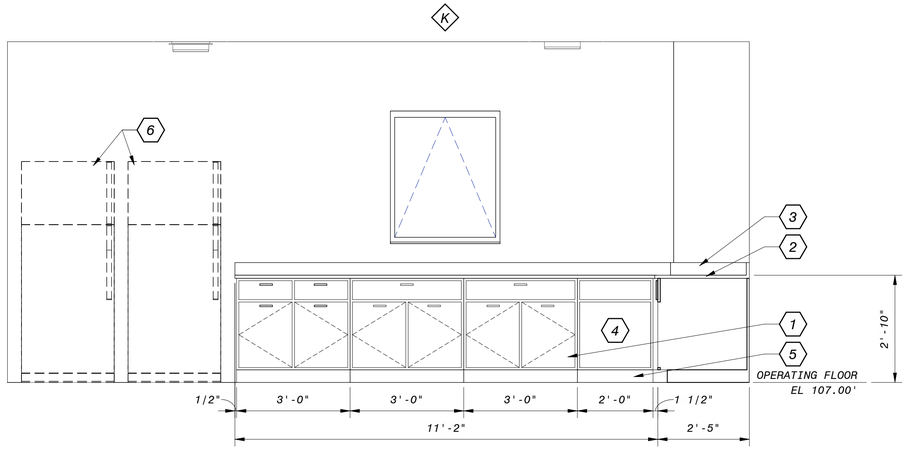

A LABORATORY WALL ELEVATION - WEST
96-A-402 1/2" = 1'-0"

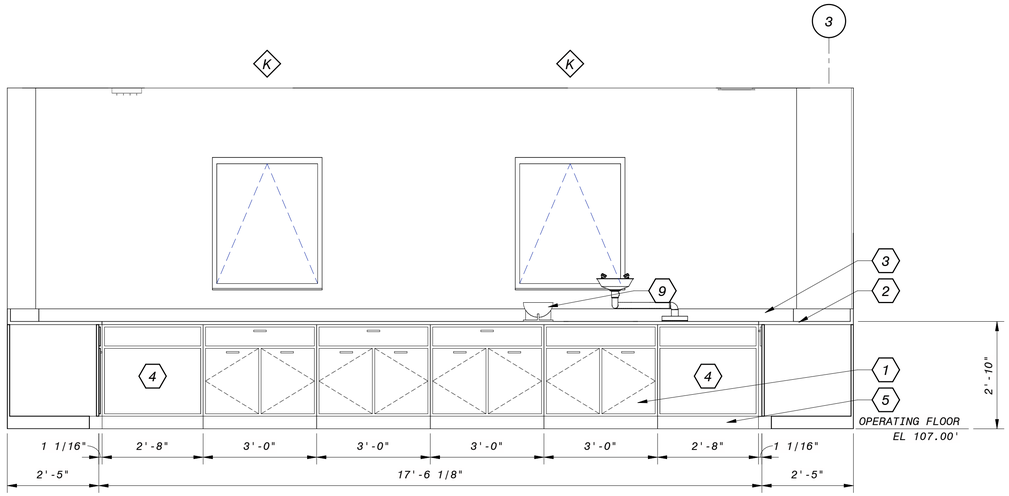

B LABORATORY WALL ELEVATION - NORTH
96-A-402 1/2" = 1'-0"

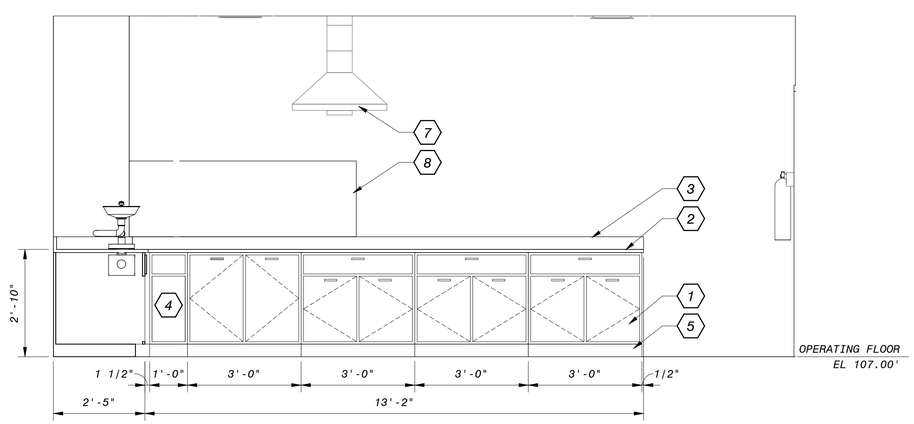

C LABORATORY WALL ELEVATION - EAST
96-A-402 1/2" = 1'-0"

GENERAL SHEET NOTES

SHEET KEYNOTES

1. LAMINATE BASE CABINET
2. 1" THICK LAB TOP - 30" DEEP
3. 6" LAB TOP BACKSPLASH
4. OPEN CORNER STORAGE
5. 4" TOE KICK WITH RESILIENT BASE
6. REFRIGERATORS (NIC)
7. STAINLESS STEEL EXHAUST HOOD
8. 24"H X 72"W STAINLESS STEEL WALL PANEL
9. COUNTERTOP EYEWASH

12' 6' 0' 1' 2' 3' 4' 5'
1/2" = 1'-0"

90% SUBMITTAL - NOT FOR CONTRUCTION

NO.	BY	CHK	APP	DATE	REVISIONS AND RECORD OF USE

LICENSED ARCHITECT
BRUCE DOUGLAS FRASER
C 9787
REGISTERED PROFESSIONAL
STATE OF CALIFORNIA

FRASER SEMPLE ARCHITECTS

JOINT VENTURE

BLACK & VEATCH

FILANC

CITY OF MORRO BAY
MORRO BAY WATER
RECLAMATION FACILITY (WRF)

MAINTENANCE BUILDING
ARCHITECTURAL
ENLARGED LABORITORY ELEVATIONS

DESIGNED: BDF
DETAILED: ANH
CHECKED: -
APPROVED: -
DATE:

0 1/2 1
IF THIS BAR DOES NOT MEASURE 1" THEN DRAWING IS NOT TO FULL SCALE

PROJECT NO.
400530

96-A-403
SHEET
OF

PLOTTED: 3/17/2020 4:20:37 PM
D400530

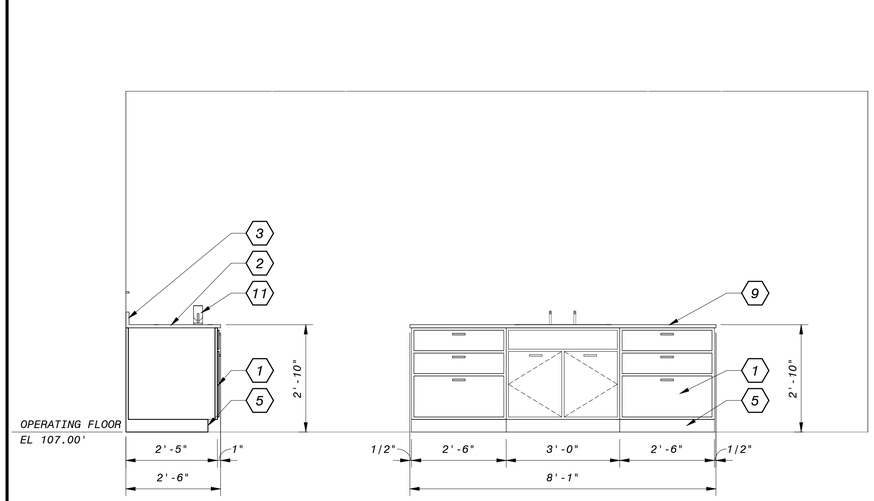

A LABORATORY ISLAND ELEVATION - WEST
96-A-402 1/2" = 1'-0"

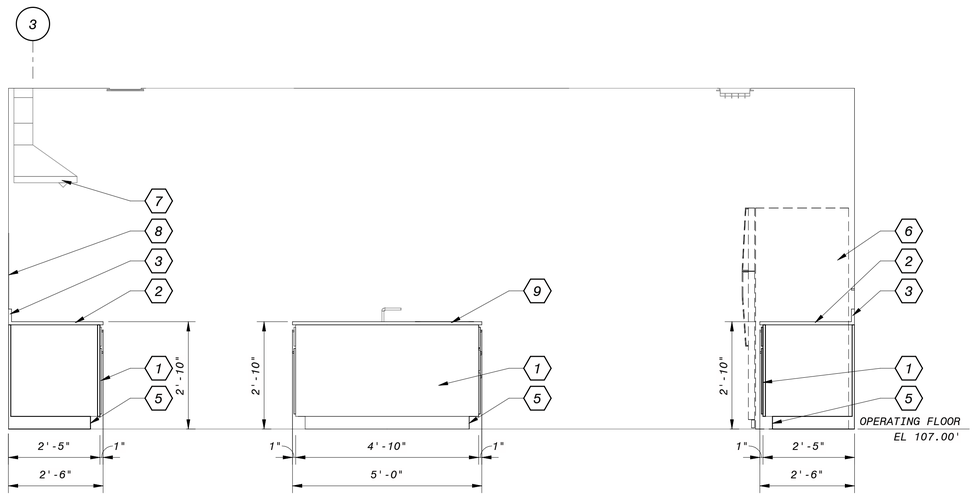

B LABORATORY ISLAND ELEVATION - NORTH
96-A-402 1/2" = 1'-0"

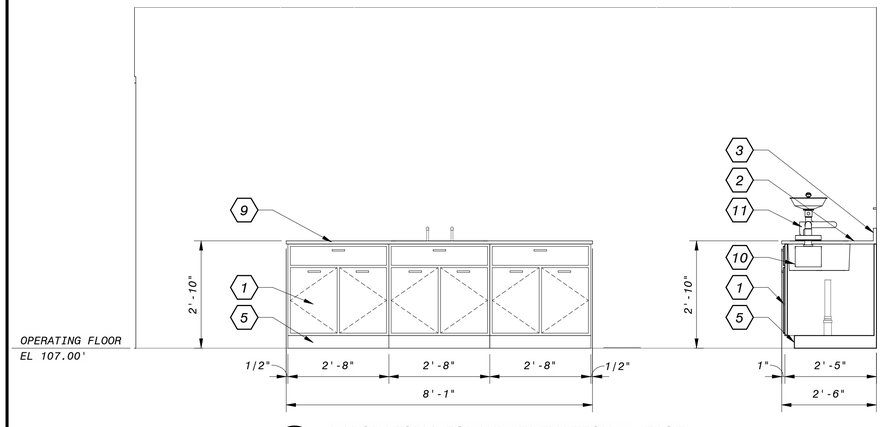

C LABORATORY ISLAND ELEVATION - EAST
96-A-402 1/2" = 1'-0"

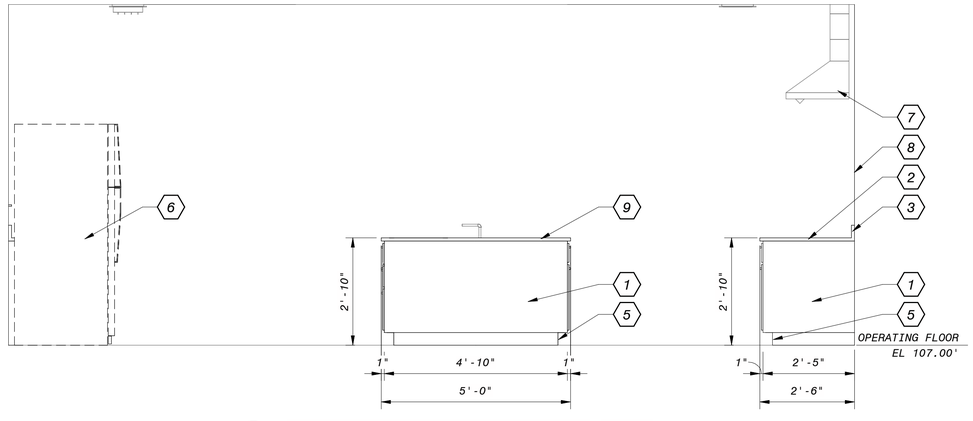

D LABORATORY ISLAND ELEVATION - SOUTH
96-A-402 1/2" = 1'-0"

GENERAL SHEET NOTES

SHEET KEYNOTES

1. LAMINATE BASE CABINET
2. 1" THICK LAB TOP - 30" DEEP
3. 4" LAB TOP BACKSPLASH
5. 4" TOE KICK WITH RESILIENT BASE
6. REFRIGERATORS (NIC)
7. STAINLESS STEEL EXHAUST HOOD
8. 24"H X 72"W STAINLESS STEEL WALL PANEL
9. 1" THICK LAB TOP AT ISLAND.
10. 23-1/2" X 18-1/2" X 7-1/2"D STAINLESS STEEL UNDERMOUNT SINK
11. COUNTERTOP EYEWASH

12' 6' 0' 1' 2' 3' 4' 5'
1/2" = 1'-0"

90% SUBMITTAL - NOT FOR CONTRUCTION

NO.	BY	CHK	APP	DATE	REVISIONS AND RECORD OF USE

LICENSED ARCHITECT
BRUCE DOUGLAS FRASER
C 9787
REGISTERED PROFESSIONAL
STATE OF CALIFORNIA

FRASER SEIPLE ARCHITECTS
JOINT VENTURE
BLACK & VEATCH
FILANC

CITY OF MORRO BAY
MORRO BAY WATER
RECLAMATION FACILITY (WRF)

MAINTENANCE BUILDING
ARCHITECTURAL
ENLARGED LABORITORY ELEVATIONS

DESIGNED: BDF
DETAILED: ANH
CHECKED: -
APPROVED: -
DATE:

0 1/2 1
IF THIS BAR DOES NOT MEASURE 1" THEN DRAWING IS NOT TO FULL SCALE

PROJECT NO.
400530

96-A-404
SHEET
OF

PLOTTED: 3/17/2020 4:20:40 PM
D400530

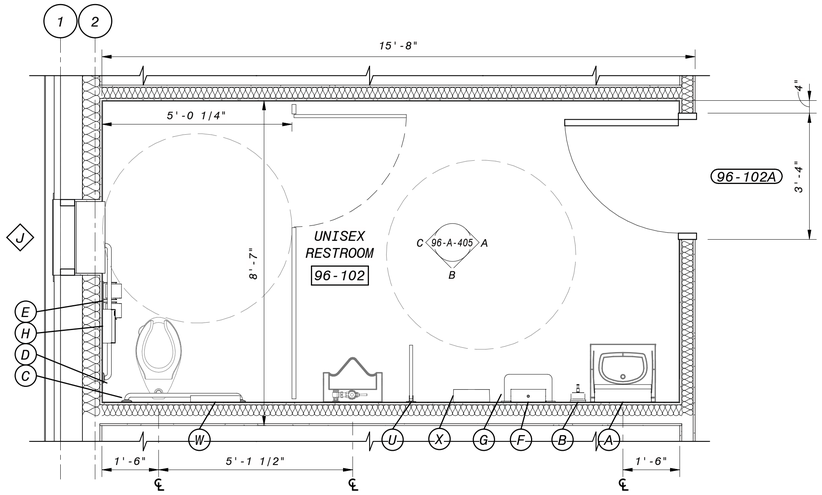

1 ENLARGED - UNISEX RESTROOM PLAN
96-A-401 1/2" = 1'-0"

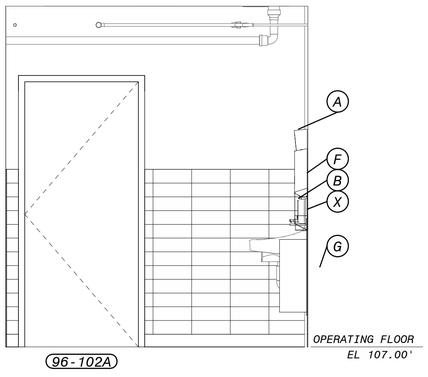

A UNISEX RESTROOM ELEVATION - EAST
96-A-405 1/2" = 1'-0"

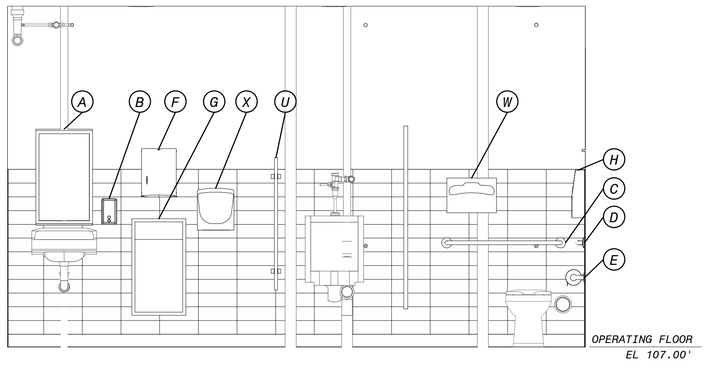

B UNISEX RESTROOM ELEVATION - SOUTH
96-A-405 1/2" = 1'-0"

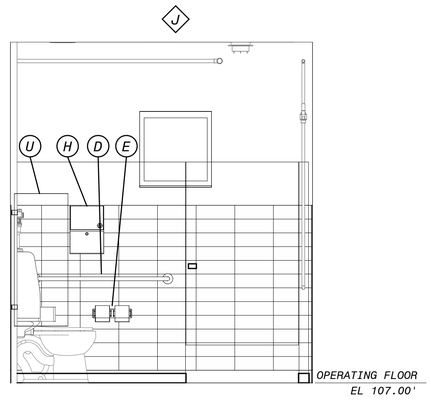

C UNISEX RESTROOM ELEVATION - WEST
96-A-405 1/2" = 1'-0"

ACCESSORY SCHEDULE			
QTY	TYPE	DESCRIPTION	MOUNTING HEIGHT
1	A	FIXED TILT MIRROR, WITH SHELF, XX by XX inches	
1	B	SOAP DISPENSER	
1	C	36" GRAB BAR	
1	D	42" GRAB BAR	
1	E	TOILET TISSUE DISPENSER	
1	F	TOWEL DISPENSER	
1	G	WASTE RECEPTACLE, 18 GALLON, RECESSED	
1	H	NAPKIN DISPOSAL, 1.5 GALLONS, SURFACE-MOUNTED	
1	U	RESTROOM PARTITIONS, URINAL SCREEN	
1	W	SURFACE MOUNTED SEAT COVER DISPENSER	
1	X	ELECTRIC HAND DRYER	

4' 2' 0' 4' 8'
1/4" = 1'-0"

90% SUBMITTAL - NOT FOR CONTRUCTION

GENERAL SHEET NOTES

SHEET KEYNOTES

NO.	BY	CHK	APP
B	BDF	BDF	EVB

60% SUBMITTAL
REVISIONS AND RECORD OF USE
DATE 7/30/2019

LICENSED ARCHITECT
BRUCE DOUGLAS FRASER
C 9787
STATE OF CALIFORNIA

FRASER SEMPLE ARCHITECTS
JOINT VENTURE
BLACK & VEATCH
FILANC

CITY OF MORRO BAY
MORRO BAY WATER
RECLAMATION FACILITY (WRF)

MAINTENANCE BUILDING
ARCHITECTURAL
ENLARGED RESTROOM PLAN AND ELEVATIONS

DESIGNED: BDF
DETAILED: ANH
CHECKED: -
APPROVED: -
DATE:

0 1/2 1
IF THIS BAR DOES NOT MEASURE 1" THEN DRAWING IS NOT TO FULL SCALE

PROJECT NO.
400530

96-A-405
SHEET
OF

PLOTTED: 3/17/2020 4:20:43 PM
D400530

ROOM FINISH SCHEDULE

ROOM No.	ROOM NAME	FLOOR		WALLS												CEILING			REMARKS
				NORTH			EAST			SOUTH			WEST						
		MATERIAL	FINISH	MATERIAL	FINISH	BASE	MATERIAL	FINISH	BASE	MATERIAL	FINISH	BASE	MATERIAL	FINISH	BASE	MATERIAL	FINISH	HEIGHT	
MAINTENANCE BUILDING																			
96-101	MAINTENANCE ROOM	CO	FS	GWB	PT	RB	EXP/CB	FF	NO	EXP/CB	FF	NO	EXP/CB	FF	NO	EXP	FF	17'-0"	
96-102	UNISEX RESTROOM	CO	FS	CT/GWB	PT	CC	CT/GWB	PT	CC	CT/GWB	PT	CC	CT/GWB	PT	CC	GWB	PT	9'-0"	
96-103	I AND C WORKSHOP	CO	FS	GWB	PT	RB	GWB	PT	RB	GWB	PT	RB	GWB	PT	RB	GWB	PT	9'-0"	
96-104	LABORATORY	CO	FS	GWB	PT	RB	GWB	PT	RB	GWB	PT	RB	GWB	PT	RB	GWB	PT	9'-0"	
96-105	CONTROL ROOM	CO	FS	GWB	PT	RB	GWB	PT	RB	GWB	PT	RB	GWB	PT	RB	GWB	PT	9'-0"	
96-106	PAINT AND FUEL STORAGE	CO	FS	GWB	PT	RB	GWB	PT	RB	GWB	PT	RB	GWB	PT	RB	GWB	PT	9'-0"	

DOOR SCHEDULE

DOOR ID		DOOR SIZE		DOOR							FRAME				REMARKS
No. (D)		WIDTH	HEIGHT	MATERIAL	HEAD	JAMB	SILL	TYPE (D)	HARDWARE	RATING	MATERIAL	HEAD	JAMB	DEPTH	
MAINTENANCE BUILDING															
96-101A		3'-0"	7'-0"	FRP	30/00-A-001	31 AND 33/00-A-001	40/00-A-001	B	14	-	FRP	2"	2"	5 3/4"	
96-101B		14'-0"	14'-0"	RS	41 SIM/00-A-001	41 AND 42/00-A-001	-	-	-	-	RS			0"	
96-101C		14'-0"	14'-0"	RS	41 SIM/00-A-001	41 AND 42/00-A-001	-	-	-	-	RS			0"	
96-101D		14'-0"	14'-0"	RS	41 SIM/00-A-001	41 AND 42/00-A-001	-	-	-	-	RS			0"	
96-101E		3'-0"	7'-0"	FRP	30/00-A-001	31 AND 33/00-A-001	40/00-A-001	B	14	-	FRP	2"	2"	5 3/4"	
96-102A		3'-0"	7'-0"	HM	-	-	-	A	8	-	HM	2"	2"	5 3/4"	
96-103A	PR	3'-0"	7'-0"	HM	-	-	-	B/B	15	-	HM	2"	2"	5 3/4"	
96-104A		3'-0"	7'-0"	HM	-	-	-	B	4	-	HM	2"	2"	5 3/4"	
96-105A		3'-0"	7'-0"	FRP	30/00-A-001	31 AND 33/00-A-001	40/00-A-001	B	14	-	FRP	2"	2"	5 3/4"	
96-106A	PR	3'-2"	7'-0"	FRP	30/00-A-001	31 AND 33/00-A-001	40/00-A-001	A/A	16	-	FRP	0"	0"	5 3/4"	SEE FRAME TYPE A

WINDOW SYSTEM & FRAME TYPE SCHEDULE

QTY	TYPE (WS)	OPENING		WINDOW							COMMENTS
		WIDTH	HEIGHT	MATERIAL	HEAD	JAMB	MULLION	SILL	GLASS	TOP ELEV	
MAINTENANCE BUILDING											
1	A	6'-8"	8'-8"	FRP	40 SIM/00-A-001	33 SIM/00-A-001	-	-	SEE LOUVER 96-106A	115.67'	SEE DOOR 96-106A

WINDOW SCHEDULE

QTY	TYPE (W)	OPENING		WINDOW							COMMENTS
		WIDTH	HEIGHT	MATERIAL	HEAD	JAMB	MULLION	SILL	GLASS	TOP ELEV	
MAINTENANCE BUILDING											
5	G	3'-0"	3'-0"	ALUM	50/00-A-001	51/00-A-001	-	53/00-A-001	1" INSULATED	119.00'	FIXED
1	J	2'-0"	2'-0"	ALUM	50/00-A-001	51/00-A-001	-	53/00-A-001	1" INSULATED	114.17'	PROJECTED
5	K	3'-0"	3'-6"	ALUM	50/00-A-001	51/00-A-001	-	52/00-A-001	1" INSULATED	114.17'	PROJECTED

LOUVER SCHEDULE

LOUVER ID	OPENING		LOUVER					REMARKS
No. (L)	WIDTH	HEIGHT	TYPE	HEAD	JAMB	SILL	TOP ELEV	
MAINTENANCE BUILDING								
96-101A	1'-0"	1'-0"	ALUM	30/00-A-002	31/00-A-002	33/00-A-002	119.00'	
96-101B	3'-0"	3'-0"	ALUM	30/00-A-002	31/00-A-002	33/00-A-002	119.00'	
96-101C	3'-0"	3'-0"	ALUM	30/00-A-002	31/00-A-002	33/00-A-002	119.00'	
96-101D	3'-0"	3'-0"	ALUM	30/00-A-002	31/00-A-002	33/00-A-002	119.00'	
96-101E	2'-6"	2'-6"	ALUM	30/00-A-002	31/00-A-002	33/00-A-002	127.33'	
96-101F	3'-0"	3'-0"	ALUM	30/00-A-002	31/00-A-002	33/00-A-002	119.00'	
96-101G	2'-6"	2'-6"	ALUM	30/00-A-002	31/00-A-002	33/00-A-002	120.17'	
96-101H	2'-6"	2'-6"	ALUM	30/00-A-002	31/00-A-002	33/00-A-002	120.17'	
96-101J	2'-8"	2'-8"	ALUM	30/00-A-002	31/00-A-002	33/00-A-002	121.67'	
96-101K	2'-8"	2'-8"	ALUM	30/00-A-002	31/00-A-002	33/00-A-002	121.67'	
96-101L	1'-0"	1'-0"	ALUM	30/00-A-002	31/00-A-002	33/00-A-002	120.00'	
96-106A	6'-4"	1'-4"	ALUM	-	-	-	115.50'	SEE FRAME TYPE A

SCHEDULE LEGEND

ALUM - ALUMINUM
CB - CONCRETE BLOCK
CO - CONCRETE
CT - CERAMIC TILE (WALL)
CC - CERAMIC COVE BASE
EXP - EXPOSED CONSTRUCTION
FF - FACTORY FINISH
FRP - FIBER REINFORCED PLASTIC
FS - FLOOR SEALER
GWB - GYPSUM WALLBOARD
HM - HOLLOW METAL
NO - NONE
PR - PAIR
PT - PAINTED
RB - RUBBER BASE
RS - ROLLING STEEL

DOOR TYPES

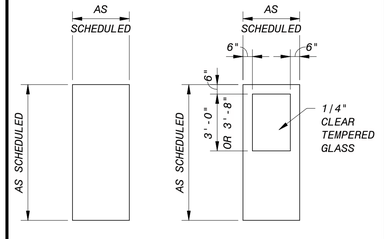

WINDOW TYPES

90% SUBMITTAL - NOT FOR CONTRUCTION

NO.	BY	CHK'D/APP'D	DATE

REVISIONS AND RECORD OF USE

LICENSED ARCHITECT BRUCE DOUGLAS FRASER C 9787 STATE OF CALIFORNIA

FRASER SEMPLE ARCHITECTS JOINT VENTURE BLACK & VEATCH FILANC

CITY OF MORRO BAY
MORRO BAY WATER RECLAMATION FACILITY (WRF)

MAINTENANCE BUILDING
ARCHITECTURAL
SCHEDULES

DESIGNED: BDF
DETAILED: ANH
CHECKED: -
APPROVED: -
DATE:

0 1/2 1
IF THIS BAR DOES NOT MEASURE 1" THEN DRAWING IS NOT TO FULL SCALE

PROJECT NO. 400530

96-A-601
SHEET OF

PLOTTED: 3/17/2020 4:20:47 PM
D400530

GENERAL ABBREVIATIONS

A	
A	ALARM, COMPRESSED AIR OUTLET
AC	AIR COMPRESSOR
AD	ACCESS DOOR, AIR DRYER
AFD	ADJUSTABLE FREQUENCY DRIVE
AFF	ABOVE FINISH FLOOR
ALUM	ALUMINUM
AP	ACCESS PANEL
APPROX	APPROXIMATE
AR	AIR RECEIVER
AUTO	AUTOMATIC
AVG	AVERAGE
AVS	AUTOMATIC VALVE STATION
B	
BF	BLIND FLANGE
BFF	BELOW FINISH FLOOR
BFP	BACKFLOW PREVENTER
BLDG	BUILDING
BOT	BOTTOM
BTUH	BRITISH THERMAL UNITS PER HOUR
BU	BELL-UP
BV	BALL VALVE
C	
C	CHANNEL
CENTR	CENTRIFUGAL
CF	CABINET FAN
C/L	CENTERLINE
CO	CLEANOUT
CONC	CONCRETE
CONN	CONNECTION
CONT	CONTINUATION
CP	CIRCULATING PUMP
CS	CONTROL STATION
CV	CHECK VALVE, CONTROL VALVE
CWW	CLEAR WATER WASTE
D	
D	DIRECT DRIVE
DEH	DEHUMIDIFIER
DF	DRINKING FOUNTAIN
DIA	DIAMETER
DN	DOWN
DSN	DOWNSPOUT NOZZLE
E	
E	ELECTRIC
EA	EACH
EEW	EMERGENCY EYE WASH
EFF	EFFICIENCY
EL	ELEVATION
EP	EXPLOSION PROOF
EQUIP	EQUIPMENT
ES	EMERGENCY SHOWER
ES/EEW	EMERGENCY SHOWER AND EYEWASH
ET	EXPANSION TANK
EWC	ELECTRIC WATER COOLER
EWH	ELECTRIC WATER HEATER
EWT	ENTERING WATER TEMPERATURE
EXIST	EXISTING
F	
F	DEGREES FAHRENHEIT
FCO	FLOOR CLEANOUT
FD	FLOOR DRAIN
FDB	DEGREES FAHRENHEIT DRY BULB
FLEX	FLEXIBLE
FM	FLOW METER
FPM	FEET PER MINUTE
FR	FUNNEL RECEPTOR
FS	FLOOR SINK, FLOW SWITCH
FSW	FILTER SURFACE WASH
FT	FEET
G	
G	GAS OUTLET
GA	GAUGE
GALV	GALVANIZED
GCO	GRADE CLEANOUT
GD	GARBAGE DISPOSER
GIH	GAS INFRARED HEATER
GPM	GALLONS PER MINUTE
GUH	GAS UNIT HEATER
GV	GATE VALVE
GW	GLASS WASHER
GWH	GAS WATER HEATER
H	
H	HAND OPERATOR, HEIGHT, HORIZONTAL
HE	HEAT EXCHANGER, HELIUM
HF	HOSE FAUCET
HO	HAND-OFF
HOA	HAND-OFF-AUTO
HP	HORSEPOWER
HR	HOUR, HOSE REEL
HUM	HUMIDIFIER
HV	HOSE VALVE
HWB	HEATING WATER BOILER
HZ	HERTZ
I	
I	INTAKE
ID	INSIDE DIAMETER
IN	INCHES
INV	INVERT
J	
JS	JANITOR'S SINK
K	
KS	KITCHEN SINK
KW	KILOWATT
L	
LAV	LAVATORY
LBS	POUNDS
LI	LEVEL INDICATOR
LS	LABORATORY SINK, LEVEL SWITCH
LWT	LEAVING WATER TEMPERATURE
M	
MAU	MAKEUP AIR UNIT
MAX	MAXIMUM
MCA	MINIMUM CIRCUIT AMPS
MFR	MANUFACTURER
MIN	MINIMUM
MOD	MODULATING
MS	MOP SINK
N	
NC	NORMALLY CLOSED
NO	NORMALLY OPEN, NUMBER
NPSHR	NET POSITIVE SUCTION HEAD REQUIRED
NT	NEUTRALIZATION TANK
O	
OD	OUTSIDE DIAMETER
ORD	OVERFLOW ROOF DRAIN
P	
PD	PRESSURE DROP (FEET OF WATER)
PAC	PACKAGED AIR CONDITIONING UNIT
PDI	PLUMBING AND DRAINAGE INSTITUTE
PDS	PRESSURE DIFFERENTIAL SWITCH
PL	PLATE
POS	POSITION
PPM	PARTS PER MILLION
PRS	PRESSURE REDUCING STATION
PRV	PRESSURE REDUCING VALVE
PS	PRESSURE SWITCH
PSI	POUNDS PER SQUARE INCH
PSIA	POUNDS PER SQUARE INCH ABSOLUTE
PSIG	POUNDS PER SQUARE INCH GAUGE
R	
RCS	REMOTE CONTROL STATION
RD	ROOF DRAIN
REQD	REQUIRED
S	
SF	SQUARE FEET, SUPPLY FAN
SH	SHEET, SHOWER
SIM	SIMILAR
SS	STAINLESS STEEL
SSK	SERVICE SINK
SSP	SUBMERSIBLE SUMP PUMP
STD	STANDARD
SV	SERVICE VALVE, SHUTOFF VALVE, SUPPLY VALVE, SOLENOID VALVE
T	
TD	TRENCH DRAIN
TP	TRAP PRIMER
TS	TAMPER SWITCH
TYP	TYPICAL
U	
UR	URINAL
V	
V	VERTICAL
VAC	VACUUM OUTLET
VB	VACUUM BREAKER
VCD	VOLUME CONTROL DAMPER
VF	VANEAXIAL FAN
VP	VACUUM PUMP
VSP	VERTICAL COLUMN SUMP PUMP
VTR	VENT THRU ROOF
W	
W	WIDE FLANGE, WIDTH
WBP	WATER BOOSTER PUMP
WC	WATER CLOSET, WATER COLUMN
WCO	WALL CLEANOUT
WG	WATER GAUGE
WH	WALL HYDRANT
WHA	WATER HAMMER ARRESTOR
WM	WALL MOUNTED
WST	WATER STORAGE TANK
WT	WEIGHT

SYSTEM ABBREVIATIONS

WATER		WASTE		SPECIAL	
NPW	COLD WATER (NON-POTABLE)	CRV	CHEMICAL RESISTANT VENT	A	COMPRESSED AIR
CW, PW	COLD WATER (POTABLE)	CRW	CHEMICAL RESISTANT WASTE	ACET	ACETYLENE
DE	DEIONIZED WATER	CWW	CLEAR WATER WASTE	AR	ARGON
DW	DISTILLED WATER	D	INDIRECT DRAIN	H	HYDROGEN
F	FIRE PROTECTION WATER	PD	SUMP PUMP DISCHARGE	HE	HELIUM
HWC	HOT WATER CIRCULATING (POTABLE)	SAN	SANITARY DRAIN	ME	METHANE
NPHW	HOT WATER (NON-POTABLE)	ST	STORM DRAIN	N	NITROGEN
HW	HOT WATER (POTABLE)	V	VENT	NO	NITROUS OXIDE
PEW	PLANT EFFLUENT WATER			OX	OXYGEN
SW	SOFTENED WATER	FUEL GAS		VAC	VACUUM
TNPW	TEMPERED NON-POTABLE WATER	NG	NATURAL GAS		
TW	TEMPERED OR BLENDED WATER	PG	PROPANE GAS		

SCHEMATIC VALVES

- ANGLE VALVE
- BACKFLOW PREVENTER W/STRAINER (2" AND SMALLER)
- BACKFLOW PREVENTER
- BACKWATER VALVE
- BALL VALVE
- BUTTERFLY VALVE
- CHECK VALVE
- GATE VALVE
- GLOBE VALVE
- PLUG VALVE
- PRESSURE REDUCING VALVE
- THREE WAY VALVE

PLUMBING SCHEMATICS

- BELL-UP DRAIN OR FUNNEL RECEPTOR W/ TRAP
- FCO CLEANOUT (FLOOR)
- CO CLEANOUT (PIPE)
- HW / CW BLENDING VALVE
- DOWNSPOUT NOZZLE OR SHOWER
- EMERGENCY SHOWER/EYEWASH
- FLOOR DRAIN
- P-TRAP
- ROOF DRAIN
- SPLASHBLOCK
- A WATER HAMMER ARRESTOR W/ PDI SIZE DESIGNATION

SCHEMATICS SPECALTIES

- AUTOMATIC VALVE STATION
- S BASKET STRAINER
- COMBINATION PUMP DISCHARGE VALVE
- FLEXIBLE CONNECTION
- FLOW CONTROL VALVE
- FLOW SENSOR METER
- HF HOSE FAUCET
- HF HOSE FAUCET W/ VACUUM BREAKER
- HOSE VALVE W/ HOSE NIPPLE
- AIR VENT
- PRS PRESSURE REDUCING STATION
- PRESSURE RELIEF VALVE
- PRESSURE/TEMPERATURE RELIEF VALVE
- Q QUICK COUPLING
- ROTAMETER
- SIGHT FLOW INDICATOR
- SUCTION DIFFUSER (SCHEMATIC)
- TP TRAP PRIMER
- WH WALL HYDRANT W/ VACUUM BREAKER
- M METER
- S WYE STRAINER
- S WYE STRAINER W/ BLOWOFF
- VACUUM BREAKER

SCHEMATICS

- AIR-GAP FITTING
- BELL-UP DRAIN OR FUNNEL RECEPTOR
- FLOOR CLEANOUT
- FLOOR DRAIN
- FLOOR DRAIN W/ FUNNEL

CONTROLS AND INSTRUMENTATION

- FS FLOW SWITCH
- GAUGE ACTIVATOR/ISOLATOR
- LS LEVEL SWITCH
- P PRESSURE GAUGE W/ SHUTOFF VALVE
- S SOLENOID OPERATOR
- THERMOMETER - DIAL TYPE
- THERMOMETER - STEM TYPE
- V VACUUM GAUGE W/ SHUTOFF VALVE

VALVE LEGEND

PLAN	SECTION	
		ANGLE VALVE
		BACKFLOW PREVENTER W/ STRAINER (2" AND SMALLER)
		BACKFLOW PREVENTER
		BACKWATER VALVE
		BALL VALVE
		BUTTERFLY VALVE
		CHECK VALVE
		GATE VALVE
		GLOBE VALVE
		PLUG VALVE
		PRESSURE REDUCING VALVE
		THREE WAY VALVE

PIPING ACCESSORIES LEGEND

- FLEXIBLE CONNECTION
- HF HOSE FAUCET W/O VACUUM BREAKER
- HFVB HOSE FAUCET W/ VACUUM BREAKER
- HV HOSE VALVE W/ HOSE NIPPLE
- PRS PRESSURE REDUCING STATION
- PRESSURE RELIEF VALVE
- T PRESSURE / TEMPERATURE RELIEF VALVE
- Q QUICK COUPLING
- WH WALL HYDRANT W/ VACUUM BREAKER
- METER
- WYE STRAINER
- WYE STRAINER W/ BLOWOFF
- VACUUM BREAKER

PIPING LEGEND

- PIPING ABOVE FLOOR OR GRADE
- PIPING BELOW FLOOR OR GRADE
- PIPE TURNING UP
- PIPE TURNING DOWN

PIPE FITTINGS LEGEND

- BLIND FLANGE
- CAP
- REDUCER
- SLEEVE
- TP TEST PLUG
- UNION
- P-TRAP
- VTR

PLUMBING LEGEND

- BELL-UP DRAIN OR FUNNEL RECEPTOR W/ TRAP
- CLEANOUT (FLOOR)
- CLEANOUT (PIPE)
- BLENDING VALVE
- DOWNSPOUT NOZZLE
- EMERGENCY SHOWER / EYEWASH
- FLOOR DRAIN
- HOSE RACK
- HOSE REEL
- ROOF DRAIN
- SHOWER
- SPLASH BLOCK
- WATER HAMMER ARRESTOR W/ PDI SIZE DESIGNATION

SCHEMATIC FITTINGS

- BLIND FLANGE
- CAP
- REDUCER
- SLEEVE
- TP TEST PLUG
- UNION
- P-TRAP
- VENT THROUGH ROOF (VTR)

GENERAL PLUMBING NOTES

1. THIS IS GENERAL LEGEND AND ABBREVIATION SHEET FOR THE PLUMBING DRAWINGS. SOME ITEMS CONTAINED ON THIS SHEET MAY NOT BE USED ON THIS SPECIFIC PROJECT.
2. ALL MECHANICAL PLUMBING WORK SHALL BE IN ACCORDANCE WITH THE FOLLOWING APPLICABLE CODES:
   - 2016 CALIFORNIA BUILDING CODE
   - 2016 CALIFORNIA FIRE PROTECTION CODE
   - 2015 CALIFORNIA FUEL GAS CODE
   - 2016 CALIFORNIA PLUMBING BUILDING CODE
   - 2016 CALIFORNIA ENERGY CODE
3. FOR ROOFTOP EQUIPMENT CURBS, FLUES, AND FLASHING DETAILS, SEE ARCHITECTURAL DRAWINGS.
4. SEE ARCHITECTURAL AND STRUCTURAL DRAWINGS FOR ALL EQUIPMENT BASE DETAILS.
5. "SCREENED" DELINEATION DENOTES EXISTING AND NEW FACILITIES AND IS FOR REFERENCE ONLY. "LIGHT" LINE DELINEATION DEMOTES EXISTING MECHANICAL EQUIPMENT AND SYSTEMS. EXISTING FACILITY AND MECHANICAL SYSTEMS INFORMATION WAS TAKEN FROM PREVIOUS DRAWINGS, CONSTRUCTION RECORDS, DATA, AND FIELD SURVEY INFORMATION. ACTUAL LOCATION, ARRANGEMENT, AND DIMENSIONS SHALL BE FIELD VERIFIED AND WORK INSTALLED TO MEET ACTUAL CONDITIONS AND LOCATIONS ENCOUNTERED. "BOLD" (DARK) DELINEATION IS NEW WORK TO BE CONSTRUCTED UNDER THIS CONTRACT.
6. ALL PIPE PENETRATIONS THROUGH FIRE RESISTANCE RATED ASSEMBLIES SHALL BE PROVIDED WITH FIRESTOP SYSTEMS, EQUIPMENT AND ACCESSORIES TO RESIST THE PASSAGE OF FIRE, SMOKE AND OTHER GASES. THE ORIGINAL FIRE RESISTANCE RATING OF THE ASSEMBLY PENETRATED SHALL BE MAINTAINED FOR ALL TYPES OF PENETRATIONS. SEE ARCHITECTURAL DRAWINGS FOR RATED ASSEMBLY LOCATIONS.
7. METAL ROOF DECKING OR BOTTOM CHORD OF BAR JOISTS SHALL NOT BE USED FOR THE SUPPORT OF EQUIPMENT OR PIPING.
8. ALL HANGERS, BRACKETS, OR BRACES FOR EQUIPMENT AND PIPING ARE NOT INDICATED ON THE DRAWINGS. REFER TO THE SPECIFICATIONS FOR SUPPORT REQUIREMENTS NOT SHOWN ON THE PLANS.
9. ALL EQUIPMENT AND PIPING FINAL LOCATIONS SHALL BE COORDINATED TO AVOID INTERFERENCES WITH STRUCTURE, OTHER PIPING, EQUIPMENT, DUCTWORK, AND CONDUIT. UNLESS SPECIFICALLY DIMENSIONED, THE PIPE ROUTING SHOWN IS INTENDED TO INDICATE GENERAL LOCATION ONLY.
10. ALL PIPING SHALL BE ROUTED AS HIGH AS POSSIBLE WITH A MINIMUM HEIGHT OF 8'-0" ABOVE THE WALKING SURFACE UNLESS OTHERWISE INDICATED BY A CENTERLINE OR INVERT ELEVATION.
11. PIPING INSTALLED ABOVE SUSPENDED CEILINGS SHALL BE INSTALLED TO ALLOW A MINIMUM 8'-0" INCH CLEARANCE BETWEEN THE CEILING AND PIPING.
12. ALL HOSE FAUCETS AND HOSE VALVES SHALL BE INSTALLED 3'-0" ABOVE FINISHED FLOOR UNLESS OTHERWISE NOTED. WALL HYDRANTS SHALL BE INSTALLED 2'-0" ABOVE GRADE UNLESS OTHERWISE NOTED.
13. ALL HOSE FAUCETS AND WALL HYDRANTS SHALL BE NOMINAL 3/4" PIPE SIZE UNLESS OTHERWISE NOTED. ALL HOSE VALVES SHALL BE 1 1/2" NOMINAL PIPE SIZE UNLESS OTHERWISE NOTED.
14. ALL HOSE FAUCETS, WALL HYDRANTS, AND OTHER OUTLETS ON NON-POTABLE WATER LINES WHICH COULD BE USED FOR DRINKING OR DOMESTIC USE SHALL BE POSTED AS REQUIRED BY THE APPLICABLE CODES. IN ABSENCE OF A CODE REQUIREMENT, THE OUTLETS SHALL BE POSTED WITH A TAG IN THE SHAPE OF A 4" EQUILATERAL TRIANGLE BEARING THE LEGEND "DANGER: UNSAFE WATER" IN LETTERS NOT LESS THAN 1/2" IN HEIGHT. THIS TAG SHALL BE SECURELY ATTACHED IN A VISIBLE LOCATION DIRECTLY ABOVE OUTLET. THE TAG SHALL BE PAINTED ORANGE AND THE LETTERS BLACK.
15. ALL RELIEF VALVES SHALL BE PIPED TO FLOOR OR BELL-UP DRAINS.
16. SEISMIC RESTRAINTS/BRACING SHALL BE PROVIDED FOR ALL EQUIPMENT, PIPING AND ACCESSORIES IN ACCORDANCE WITH THE LATEST SMACNA SEISMIC RESTRAINT MANUAL AND LOCAL BUILDING CODES. CONTRACTOR SHALL BE RESPONSIBLE FOR ALL SEISMIC SUPPORTS AND ADDITIONAL/MISCELLANEOUS STEEL REQUIRED FOR PROPER INSTALLATION OF SUPPORTS. SUPPORTS AND SEISMIC RESTRAINTS DESIGN SUBMITTALS SHALL BEAR THE STAMP AND SIGNATURE OF AN ENGINEER LICENSED IN STATE OF CALIFORNIA.
17. INSULATION SHALL BE PROVIDED FOR EQUIPMENT AND PIPING SYSTEMS AS INDICATED IN THE SPECIFICATIONS.
18. PLUMBING VENTS OUTLETS SHALL BE LOCATED A MINIMUM OF 10' AWAY FROM ANY OUTSIDE AIR INLET.
19. PIPING SIZES TO EQUIPMENT AND EQUIPMENT SUPPORTS SHALL BE VERIFIED AND ADJUSTED TO MATCH ACTUAL EQUIPMENT FURNISHED.
20. ALL MATERIALS, FITTINGS, COVERS, AND EQUIPMENT INSTALLED IN RETURN AIR PLENUMS SHALL BE NONCOMBUSTIBLE AND UL LISTED FOR USE IN RETURN AIR PLENUMS.

90% SUBMITTAL - NOT FOR CONSTRUCTION

NO.	BY	CHK	APP	DATE	REVISIONS AND RECORD OF USE
C	RKS	AEC	RWC		
B	MDS	AEC	RWC	3/31/2020	90% SUBMITTAL
A	MDS	AEC	RWC	7/30/2019	60% SUBMITTAL
				3/5/2019	30% SUBMITTAL

REGISTERED PROFESSIONAL ENGINEER — RANDY W. CANTRELL — No. M36207 — MECHANICAL — STATE OF CALIFORNIA

BLACK & VEATCH

JOINT VENTURE

BLACK & VEATCH

FILANC

CITY OF MORRO BAY
MORRO BAY WRF
RECLAMATION FACILITY (WRF)

PLUMBING
LEGEND, ABBREVIATIONS AND GENERAL NOTES

DESIGNED: SAM
DETAILED: MDS
CHECKED: AEC
APPROVED: RWC
DATE: 3/31/2020

0 1/2 1
IF THIS BAR DOES NOT MEASURE 1" THEN DRAWING IS NOT TO FULL SCALE

PROJECT NO.
400530

00-P-001
SHEET
OF

PLOTTED: 3/26/2020 7:30:16 PM
D400530

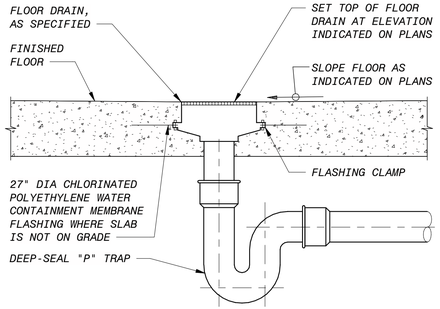

A FLOOR DRAIN - NEW FLOOR

NO SCALE

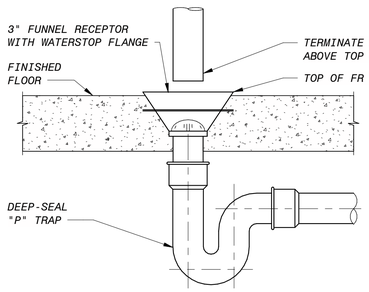

B FUNNEL DRAIN - NEW FLOOR

NO SCALE

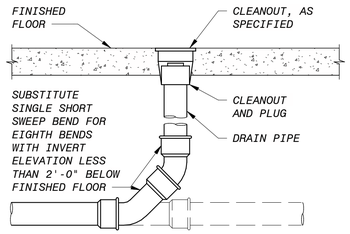

C FLOOR CLEANOUT - NEW FLOOR

NO SCALE

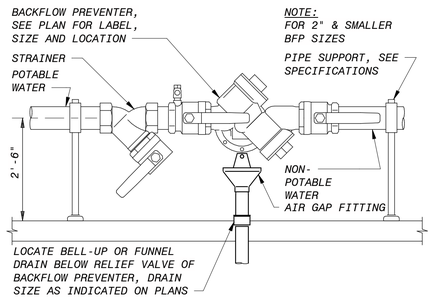

D BACKFLOW PREVENTER

NO SCALE

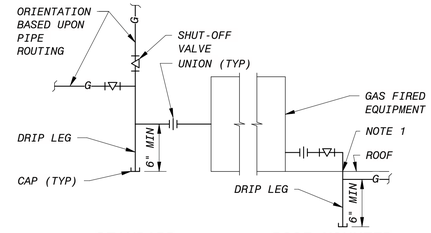

STANDARD ROOF-MOUNTED

NOTES:
1. SEE ARCHITECTURAL DRAWINGS AND THE SPECIFICATIONS FOR FLASHING REQUIREMENTS.

E FUEL GAS PIPING CONNECTION AT EQUIPMENT

NO SCALE

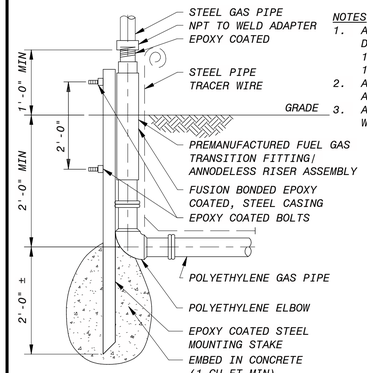

NOTES
1. ASSEMBLY SHALL MEET DEPT. OF TRANSPORTATION 192.281, 192.283 AND 192.375.
2. ASSEMBLY SHALL MEET ASTM-D2513 CAT-1.
3. ASSEMBLY SHALL BE LISTED WITH IAPMO/UPC AND CSA.

F FUEL GAS TRANSITION FITTING

NO SCALE

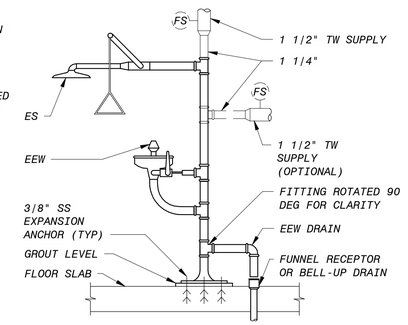

G EMERGENCY SHOWER AND EYE WASH

NO SCALE

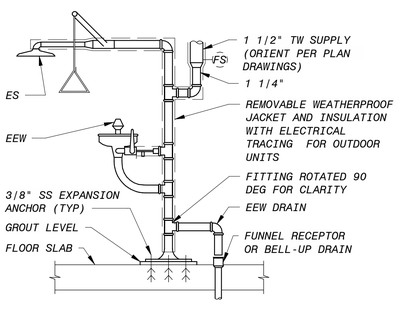

H EMERGENCY SHOWER AND EYE WASH

NO SCALE

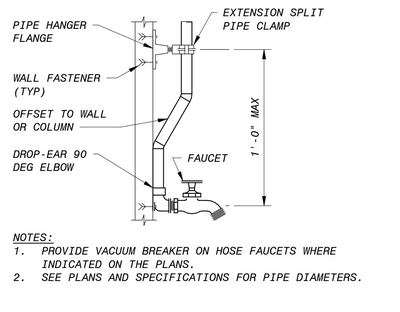

NOTES:
1. PROVIDE VACUUM BREAKER ON HOSE FAUCETS WHERE INDICATED ON THE PLANS.
2. SEE PLANS AND SPECIFICATIONS FOR PIPE DIAMETERS.

J HOSE FAUCET PIPE MOUNTING

NO SCALE

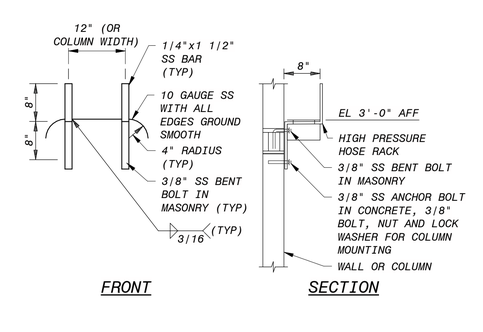

FRONT SECTION

K WALL OR COLUMN MOUNTED HOSE RACK

NO SCALE

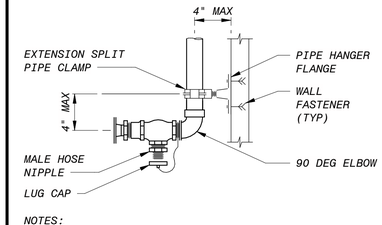

NOTES:
1. SEE PLANS AND SPECIFICATIONS FOR PIPE DIAMETERS.
2. LUG CAPS AND CHAINS SHALL BE PROVIDED ON HOSE VALVES LOCATED OUTDOORS.

L HOSE VALVE PIPE MOUNTING

NO SCALE

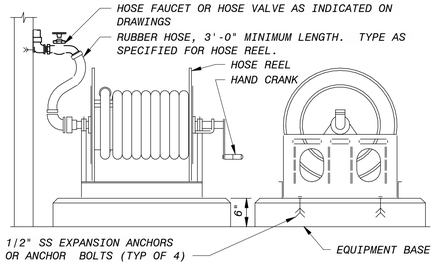

FRONT SIDE

NOTE:
THE EXACT ORIENTATION OF WATER SUPPLY PIPE AND HOSE VALVE SHOULD BE AS REQUIRED TO SUIT THE SPECIFIC INSTALLATION.

M HOSE REEL

NO SCALE

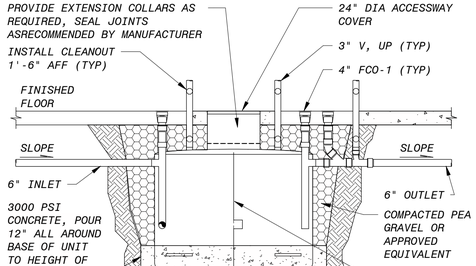

N OIL INTERCEPTOR

NO SCALE

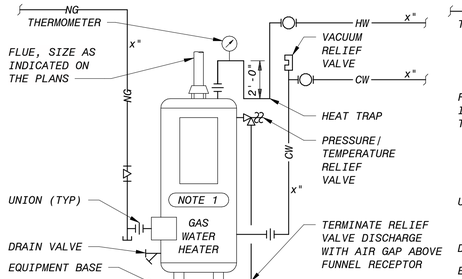

NOTES:
1. SEE PLANS FOR ELECTRIC WATER HEATER TAG NUMBERS.

P GAS WATER HEATER PIPING SCHEMATIC

NO SCALE

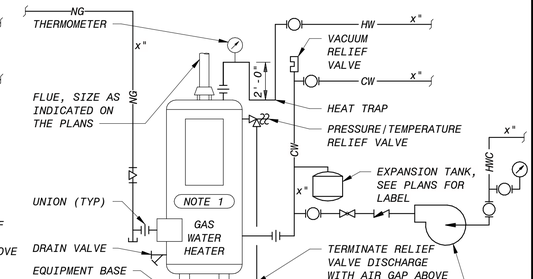

NOTES:
1. SEE PLANS FOR ELECTRIC WATER HEATER TAG NUMBERS.

Q GAS WATER HEATER PIPING SCHEMATIC

NO SCALE

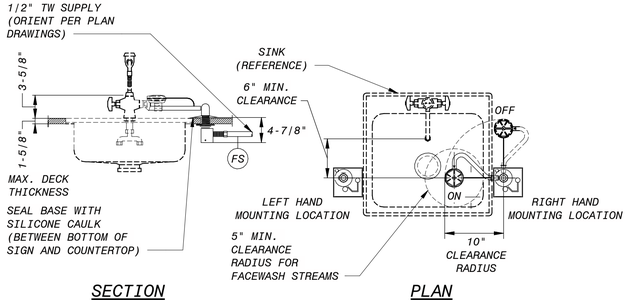

SECTION PLAN

R EMERGENCY EYE WASH

NO SCALE

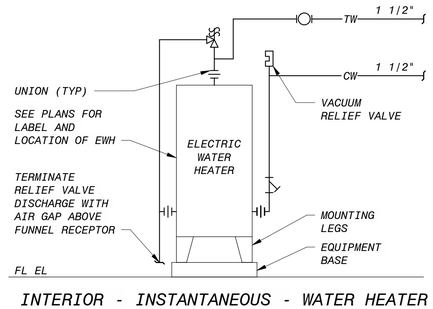

INTERIOR - INSTANTANEOUS - WATER HEATER WATER HEATER PIPING SCHEMATIC

S

NO SCALE

90% SUBMITTAL - NOT FOR CONSTRUCTION

NO.	BY	CHK	APP
C	RKS	AEC	RWC
B	MDS	AEC	RWC
A	MDS	AEC	RWC

REVISIONS AND RECORD OF USE

DATE
3/31/2020
7/30/2019
3/5/2019

REGISTERED PROFESSIONAL ENGINEER
RANDY W. CANTRELL
No. M36207
MECHANICAL
STATE OF CALIFORNIA

BLACK & VEATCH

JOINT VENTURE

BLACK & VEATCH

FILANC

CITY OF MORRO BAY
MORRO BAY WRF
RECLAMATION FACILITY (WRF)

PLUMBING DETAILS

DESIGNED: SAM
DETAILED: MDS
CHECKED: AEC
APPROVED: RWC
DATE: 3/31/2020

0 1/2 1
IF THIS BAR DOES NOT MEASURE 1" THEN DRAWING IS NOT TO FULL SCALE

PROJECT NO.
400530

00-P-501
SHEET
OF

PLOTTED: 3/26/2020 7:30:17 PM
D400530

BACKFLOW PREVENTER SCHEDULE

UNIT NUMBER	SERVICE	BODY SIZE (IN)	MAXIMUM FLOW (GPM)	MAXIMUM PD (PSI)	MANUFACTURER / MODEL	NOTES
16-PLUM-BFP-0001	WATER AND COLLECTION SUPPLIES STORAGE SHED	1.0	60	13	WATTS/FEBCO LF860/1 LF860-QT RP	---
50-PLUM-BFP-0001	RO & UV BUILDING	1.0	60	13	WATTS/FEBCO LF860/1 LF860-QT RP	---
90-PLUM-BFP-0001	CHEMICAL BUILDING	1.5	120	13	WATTS/FEBCO LF860/1 1/2 LF860-QT RP	---
95-PLUM-BFP-0001	OPERATIONS BUILDING	1.0	60	13	WATTS/FEBCO LF860/1 LF860-QT RP	---
96-PLUM-BFP-0001	MAINTENANCE BUILDING	2.0	120	13	WATTS/FEBCO LF860/2 LF860-QT RP	---

PIPING ACCESSORIES SCHEDULE

UNIT NUMBER	DESCRIPTION	MANUFACTURER / MODEL	NOTES
50-PLUM-MV-0001	THERMOSTATIC MIXING VALVE, 1 GPM MINIMUM FLOW, 25 GPM FLOW AT 20 PSI MAXIMUM DIFFERENTIAL PRESSURE, INITIAL SETPOINT 85 F.	HAWS 9201E	---
96-PLUM-MV-0001	THERMOSTATIC MIXING VALVE, 1 GPM MINIMUM FLOW, 5 GPM FLOW AT 5 PSI MAXIMUM DIFFERENTIAL PRESSURE, INITIAL SETPOINT 85 F.	HAWS 9201EFE	---
FCO-1	HEAVY DUTY FLOOR CLEANOUT, SECURED ROUND ADJUSTABLE NICKEL BRONZE TOP.	SMITH 4111 SERIES	---
FD-1	MEDIUM DUTY CAST IRON FLOOR DRAIN, ADJUSTABLE TOP, LOOSE SET CAST IRON GRATE.	SMITH 2310 SERIES	---
FD-8	HEAVY DUTY CAST IRON FLOOR DRAIN, 12" DIAMETER TRACTOR GRATE.	SMITH 2141 SERIES	---
FR-1	MEDIUM DUTY CAST IRON FUNNEL RECEPTOR, WATERSTOP FLANGE, THREADED OR NO HUB CONNECTION.	SMITH 3800 SERIES	
FS-1	CAST IRON FLOOR SINK, 8" DIAMETER TOP, DOME BOTTOM STRAINER.	SMITH 3030 SERIES	---
MV-1	THERMOSTATIC MIXING VALVE, 1/2" BODY, 0.5 GPM MINIMUM FLOW, 7.5 GPM FLOW AT 20 PSI MAXIMUM DIFFERENTIAL PRESSURE, INITIAL SETPOINT 110 F.	SYMMONS MAXLINE 5-225-CK	---

PLUMBING EQUIPMENT SCHEDULE

UNIT NUMBER	DESCRIPTION	MANUFACTURER	NOTES
50-PLUM-ET-0001	EXPANSION TANK, PIPELINE MOUNTED, 14 GALLON, PRECHARGE TO 80 PSIG.	AMTROL THERM-X-TROL ST-C SERIES	---
50-PLUM-GWH-0001	NATURAL GAS FIRED WATER HEATER, COMMERCIAL GRADE, 100 GALLONS STORAGE, 178 GPH RECOVERY AT 100 F RISE, 150 MBTUH INPUT, 120 VOLT, 1 PHASE, 60 HZ, 6-10 IN WC GAS SUPPLY PRESSURE. INITIAL SETPOINT 120 F.	AO SMITH BTH-150	1
50-PLUM-TP-0001	ELECTRONIC TRAP PRIMING MANIFOLD, SURFACE MOUNTED, 3/4" NPT INLET, 1/2" TUBE CONNECTIONS, 120 VOLT, 1 PHASE, 60 HZ. SERVE FLOOR DRAIN IN RO/UV ROOM (22 CONNECTION)	PRECISION PLUMBING PRODUCTS, INC. PRIME-TIME PT-22	---
72-PLUM-EWH-0001	INSTANTANEOUS ELECTRIC WATER HEATER, NEMA 4X ENCLOSURE, WITH MOUNTING LEGS, 63 KW, 480 VOLT, 3 PHASE, 60 HZ. INITIAL SETPOINT 85 F.	KELTECH SNA SERIES	2
90-PLUM-EWH-0001	ELECTRIC WATER HEATER, TANKLESS WITH MOUNTING LEGS, 108 KW,480 VOLT, 3 PHASE, 60 HZ. OUTDOOR UNIT SHALL BE PROVIDED WITH FREEZE PROTECTION PACKAGE.	KELTECH SNA SERIES	2
95-PLUM-CP-0001	IN-LINE HOT WATER CIRCULATING PUMP, 1 GPM, 7 FEET HEAD, 120 VOLT, 1 PHASE, 60 HZ.	BELL & GOSSETT NBF-22	---
95-PLUM-ET-0001	EXPANSION TANK, PIPELINE MOUNTED, 14 GALLON, PRECHARGE TO 80 PSIG.	AMTROL THERM-X-TROL ST-C SERIES	---
95-PLUM-GWH-0001	NATURAL GAS FIRED WATER HEATER, COMMERCIAL GRADE, 119 GALLONS STORAGE, 349 GPH RECOVERY AT 100 F RISE, 300 MBTUH INPUT, 120 VOLT, 1 PHASE, 60 HZ, 6-10 IN WC GAS SUPPLY PRESSURE. INITIAL SETPOINT 120 F.	AO SMITH BTH-300	1
95-PLUM-TP-0001	ELECTRONIC TRAP PRIMING MANIFOLD, SURFACE MOUNTED, 3/4" NPT INLET, 1/2" TUBE CONNECTIONS, 120 VOLT, 1 PHASE, 60 HZ. SERVE FLOOR DRAIN IN MENS LOCKER ROOM (12 CONNECTION)	PRECISION PLUMBING PRODUCTS, INC. PRIME-TIME PT-12	---
96-PLUM-CP-0001	IN-LINE HOT WATER CIRCULATING PUMP, 1 GPM, 7 FEET HEAD, 120 VOLT, 1 PHASE, 60 HZ.	BELL & GOSSETT NBF-22	---
96-PLUM-ET-0001	EXPANSION TANK, PIPELINE MOUNTED, 8 GALLON, PRECHARGE TO 80 PSIG.	AMTROL THERM-X-TROL ST-C SERIES	---
96-PLUM-GWH-0001	NATURAL GAS FIRED WATER HEATER, COMMERCIAL GRADE, 100 GALLONS STORAGE, 178 GPH RECOVERY AT 100 F RISE, 150 MBTUH INPUT, 120 VOLT, 1 PHASE, 60 HZ, 6-10 IN WC GAS SUPPLY PRESSURE. INITIAL SETPOINT 120 F.	AO SMITH BTH-150	1
96-PLUM-OL-0001	OIL INTERCEPTOR, MULTI-STAGE BASIN TYPE, 200 GALLONS, 2 STAGE, 4" INLET AND OUTLET, 3" VENT.	PROCEPTOR	3
96-PLUM-TP-0001	ELECTRONIC TRAP PRIMING MANIFOLD, SURFACE MOUNTED, 3/4" NPT INLET, 1/2" TUBE CONNECTIONS, 120 VOLT, 1 PHASE, 60 HZ. SERVE FLOOR DRAIN IN MAINTENANCE ROOM (12 CONNECTION)	PRECISION PLUMBING PRODUCTS, INC. PRIME-TIME PT-12	---
HR-1	HOSE REEL WITH 1 1/2" SWIVEL WATER SUPPLY AND 100 FEET TYPE 1 HOSE.	HANNAY 3528-25-26	---

PLUMBING FIXTURE SCHEDULE

LABEL	DESCRIPTION	MANUFACTURER / MODEL	WATER		SANITARY		NOTES
			HOT	COLD	WASTE	VENT	
WC-1	WATER CLOSET, FLOOR MOUNT, FLUSH VALVE, 1.28 GALLON/FLUSH MAX.	AMERICAN STANDARD 3517A.101 RIGHT HEIGHT ELONGATED BOWL	---	1"	4"	2"	---
UR-1	URINAL, WALL MOUNT, FLUSH VALVE, 0.5 GALLON/FLUSH MAX.	AMERICAN STANDARD 6590.005 WASHBROOK FLOWISE	---	3/4"	2"	1 1/2"	---
L-1	LAVATORY, COUNTERTOP 20"x17", OVAL, 4" CENTER, WITH 0.5 GPM AERATED FAUCET AND GRID DRAIN.	LAV: AMERICAN STANDARD 0476.028 AQUALYN FAUCET: AMERICAN STANDARD 7385.003 RELIANT 3	1/2"	1/2"	1 1/2"	1 1/2"	1
L-2	LAVATORY, WALL HUNG 21"x18", WITH [1.5] [0.5] GPM AERATED FAUCET AND POP-UP DRAIN.	LAV: AMERICAN STANDARD 0355.012 LUCERNE FAUCET: AMERICAN STANDARD 7385.000 RELIANT 3	1/2"	1/2"	1 1/2"	1 1/2"	1
MS-1	MOP SINK, 24"x24", 12" DEEP, FLOOR MOUNTED, THREE SPLASH PANELS.	SINK: STERN-WILLIAMS HL-1810-BP3 FAUCET: AMERICAN STANDARD 8354.112	1/2"	1/2"	3"	2"	---
EWC-1	ELECTRIC WATER COOLER, WALL MOUNTED, 8 GPH, 120 VOLT, 1 PHASE, 60 HZ.	ELKAY EZS8	---	1/2"	1 1/2"	1 1/2"	1
S-1	SAMPLE SINK, 24"x24", FREE STANDING, 14" DEEP, 14 GAUGE STAINLESS STEEL, 2" DRAIN, 24" RIGHT & LEFT DRAIN BOARD, STAINLESS STEEL LEGS.	SINK: ELKAY WNSF8124 DRAIN: ELKAY LK25 RT	---	---	2"	2"	---
S-2	KITCHEN SINK, 21"x33", DOUBLE BOWL, 7 1/2" DEEP, 20 GAUGE STAINLESS STEEL, THREE HOLE PUNCHED, SINGLE LEVER FAUCET.	SINK: ELKAY ELV2219CS FAUCET: AMERICAN STANDARD 4175.500 COLONY SOFT	1/2"	1/2"	1 1/2"	1 1/2"	---
S-5	SAMPLE SINK, 24"x24", FREE STANDING, 14" DEEP, 14 GAUGE STAINLESS STEEL, 2" DRAIN, STAINLESS STEEL LEGS.	SINK: ELKAY WNSF8124 DRAIN: ELKAY LK25 RT	---	---	2"	2"	---
SS-1	SERVICE SINK, 24"x20", WALL MOUNTED,CAST IRON,SINGLE BOWL,BLANK BACK,WALL MOUNTED FAUCET FOR EXPOSED OVERHEAD SUPPLIES	SINK: AMERICAN STANDARD 7695.000 AKRON FAUCET: CHICAGO FAUCET 835	1/2"	1/2"	3"	1 1/2"	---
LS	LAB SINK, SEE LAB SPEC SECTION FOR DETAILS.	---	1/2"	1/2"	1 1/2"	1 1/2"	---
CS	CUP SINK, SEE LAB SPEC SECTION FOR DETAILS.	---	1/2"	1/2"	1 1/2"	1 1/2"	---
EEW-1	EMERGENCY EYE/FACE WASH, FROST-PROOF TO 30 F, COUNTER TOP RIGHT MOUNTED, 1/2" IPS SUPPLY.	HAWS 7611	---	1/2"	---	---	2,3
ES/EEW-1	EMERGENCY SHOWER/EYE/FACE WASH COMBINATION, PEDESTAL MOUNTED, 1 1/4" IPS SUPPLY.	HAWS 8300-8309	---	1 1/4"	---	---	2,3,4
ES/EEW-2	EMERGENCY SHOWER/EYE/FACE WASH COMBINATION, FROST-PROOF TO -30 F, PEDESTAL MOUNTED, 1 1/4" IPS SUPPLY, 120 VOLT. WITH FREEZE PROTECTION BLEED VALVE AND SCALD PROTECTION BLEED VALVE.	HAWS 8317 CTFP	---	1 1/4"	---	---	2,3,4

GENERAL SHEET NOTES

PLUMBING EQUIPMENT SCHEDULE:
ACCESSORIES: NONE

NOTES:
1. PROVIDE CONDENSATE ACID NEUTRALIZATION AND CONCENTRIC VENT KITS.
2. ANSI Z358.1 COMPLIANT.
3. PROVIDE EXTENSIONS FOR ACCESS TO GRADE, WITH TRAFFIC RATED COVER.

PLUMBING FIXTURE SCHEDULE:
ACCESSORIES: NONE

NOTES:
1. FIXTURE AND INSTALLATION SHALL BE ADA COMPLIANT.
2. TEMPERED WATER SUPPLY.
3. LOCAL AND REMOTE ALARM SYSTEM.
4. SCALD PROTECTION BLEED VALVE.

NO.	BY	CHK	APP	DATE	REVISIONS AND RECORD OF USE
C	RKS	AEC	RWC	3/31/2020	90% SUBMITTAL
B	MDS	AEC	RWC	7/30/2019	60% SUBMITTAL
A	MDS	AEC	RWC	3/5/2019	30% SUBMITTAL

REGISTERED PROFESSIONAL ENGINEER
RANDY W. CANTRELL
No. M36207
MECHANICAL
STATE OF CALIFORNIA

BLACK & VEATCH
JOINT VENTURE
BLACK & VEATCH
FILANC

CITY OF MORRO BAY
MORRO BAY WRF
RECLAMATION FACILITY (WRF)

PLUMBING SCHEDULE

DESIGNED: SAM
DETAILED: MDS
CHECKED: AEC
APPROVED: RWC
DATE: 3/31/2020

0 1/2 1
IF THIS BAR DOES NOT MEASURE 1" THEN DRAWING IS NOT TO FULL SCALE

PROJECT NO.
400530

00-P-601
SHEET
OF

90% SUBMITTAL - NOT FOR CONSTRUCTION

PLOTTED: 3/26/2020 7:30:17 PM
D400530

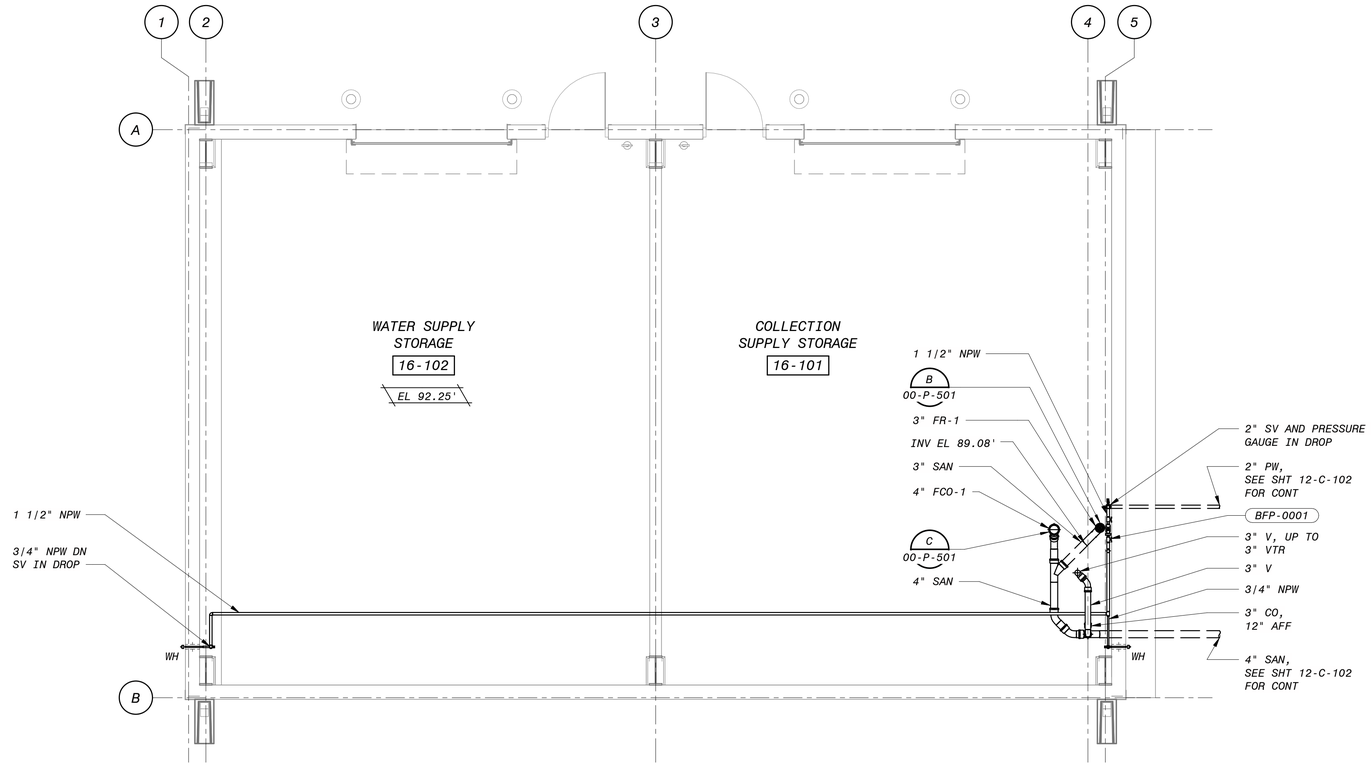

PLAN

1/4" = 1'-0"

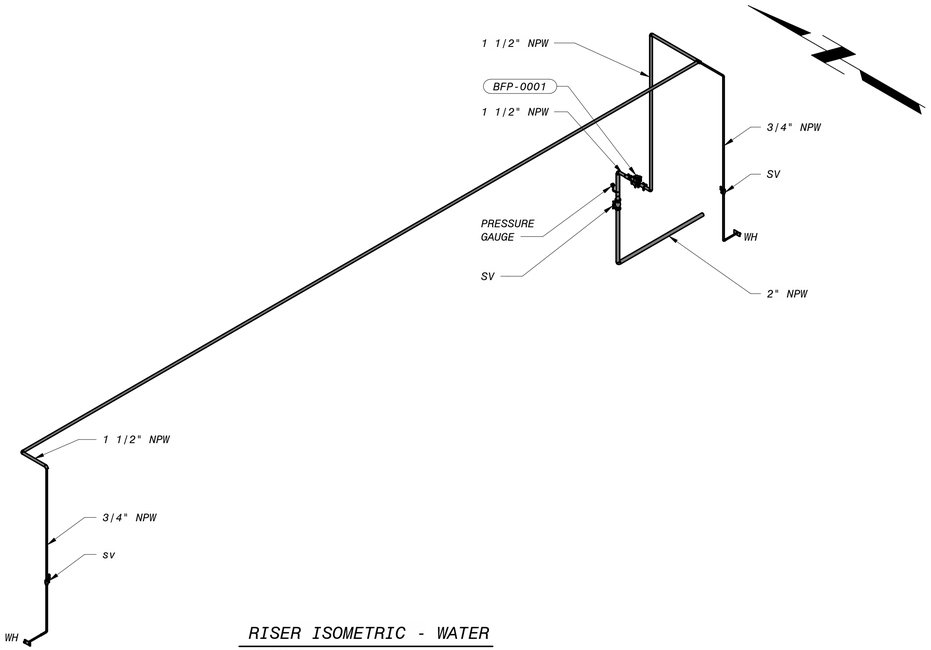

RISER ISOMETRIC - WATER

NO SCALE

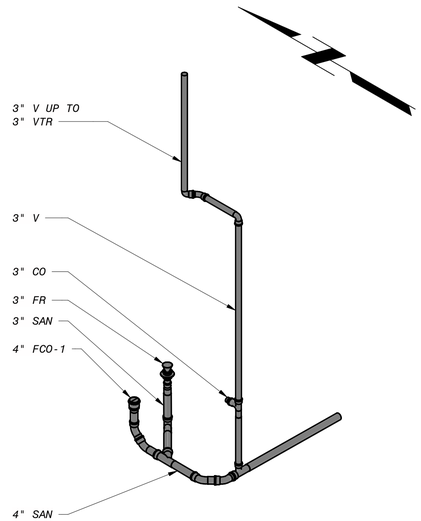

RISER ISOMETRIC - SANITARY

NO SCALE



GENERAL SHEET NOTES

1. PLUMBING EQUIPMENT TAGS FOR EVERYTHING ON THIS SHEET BEGINS WITH 16-PLUM.

4' 2' 0' 4' 8'

1/4" = 1'-0"

90% SUBMITTAL - NOT FOR CONSTRUCTION

NO.	BY	CHK	APP	DATE	REVISIONS AND RECORD OF USE
C	YBM	AEC	RWC	3/31/2020	90% SUBMITTAL
B	YBM	AEC	RWC	7/30/2019	60% SUBMITTAL
A	YBM	AEC	RWC	3/5/2019	30% SUBMITTAL

REGISTERED PROFESSIONAL ENGINEER
RANDY W. CANTRELL
No. M36207
MECHANICAL
STATE OF CALIFORNIA

BLACK & VEATCH
JOINT VENTURE
BLACK & VEATCH
FILANC

CITY OF MORRO BAY
MORRO BAY WRF

WATER AND COLLECTION SUPPLIES STORAGE SHED
PLUMBING
PLAN AND RISER ISOMETRICS

DESIGNED: VAP
DETAILED: YBM
CHECKED: AEC
APPROVED: RWC
DATE: 3/31/2020

0 1/2 1
IF THIS BAR DOES NOT MEASURE 1" THEN DRAWING IS NOT TO FULL SCALE

PROJECT NO.
400530

16-P-101
SHEET
OF

PLOTTED: 3/26/2020 7:53:30 PM
D400530

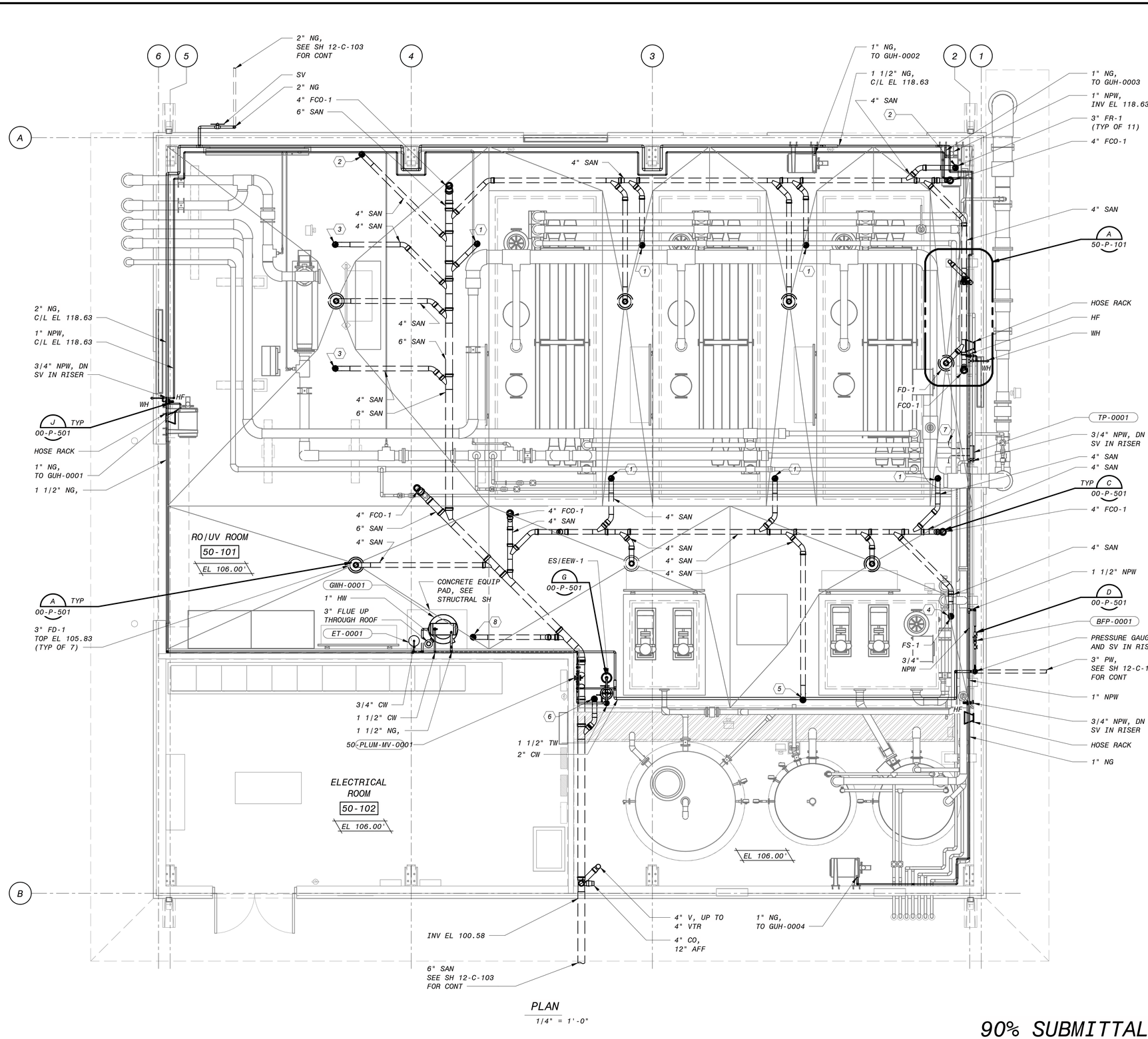

PLAN
1/4" = 1'-0"

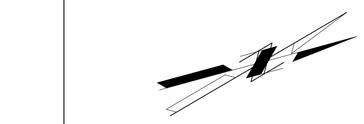

GENERAL SHEET NOTES

1. PLUMBING EQUIPMENT TAGS FOR EVERYTHING ON THIS SHEET BEGINS WITH 50-PLUM.

SHEET KEYNOTES

1. 3" FR FOR SKID EQUIPMENT DRAIN. FOR CONT SEE SHT 50-I-001.
2. 3" FR FOR ANALYZER PANEL DRAIN. FOR CONT SEE SHT 52-I-001.
3. 3" FR FOR UV EQUIPMENT DRAIN. FOR CONT SEE SHT 52-I-001.
4. 3" FS-1 FOR CIP CARTRIDGE FILTER DRAIN. FOR CONT SEE SHT 51-I-010.
5. 3" FR FOR NEUTRALIZATION TANK DRAIN. FOR CONT SEE SHT 51-I-011.
6. 3" FR FOR ES-EEW-1 DRAIN.
7. 1/2" TRAP PRIMER PIPING TO ALL FD, FS AND FR.
8. 3" FR FOR WATER HEATER DRAIN.

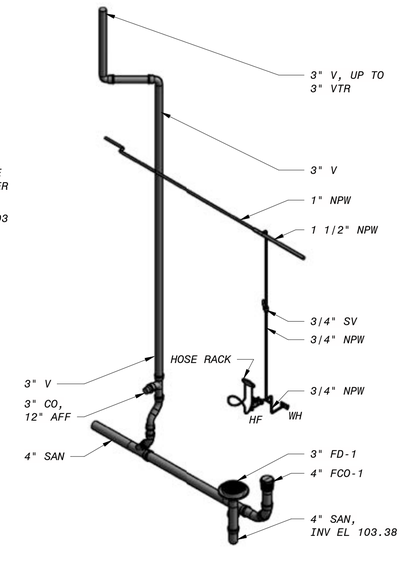

A DETAIL - ENLARGED ISOMETRIC
NO SCALE

4' 2' 0' 4' 8'
1/4" = 1'-0"

90% SUBMITTAL - NOT FOR CONSTRUCTION

NO.	BY	CHK	APP	DATE	REVISIONS AND RECORD OF USE
C	YBM	AEC	RWC	3/31/2020	90% SUBMITTAL
B	YBM	AEC	RWC	7/30/2019	60% SUBMITTAL
A	YBM	AEC	RWC	3/5/2019	30% SUBMITTAL

REGISTERED PROFESSIONAL ENGINEER
RANDY W. CANTRELL
No. M36207
MECHANICAL
STATE OF CALIFORNIA

BLACK & VEATCH
JOINT VENTURE
BLACK & VEATCH
FILANC

CITY OF MORRO BAY
MORRO BAY WRF
RECLAMATION FACILITY (WRF)

RO/UV BUILDING
PLUMBING
PLAN AND ENLARGED ISOMETRIC

DESIGNED: VAP
DETAILED: YBM
CHECKED: AEC
APPROVED: RWC
DATE: 3/31/2020

0 1/2 1
IF THIS BAR DOES NOT MEASURE 1" THEN DRAWING IS NOT TO FULL SCALE

PROJECT NO.
400530

50-P-101
SHEET
OF

PLOTTED: 3/26/2020 8:13:54 PM
D400530

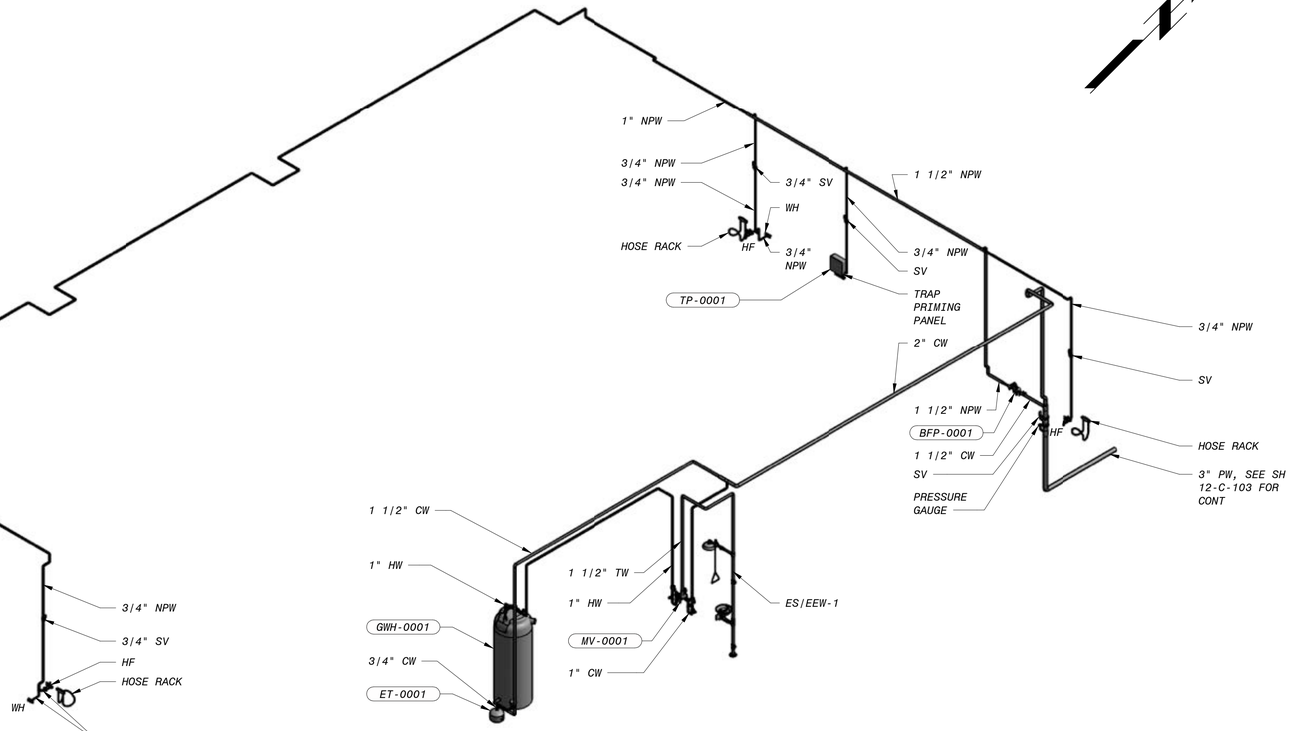

RISER ISOMETRIC - WATER

NO SCALE

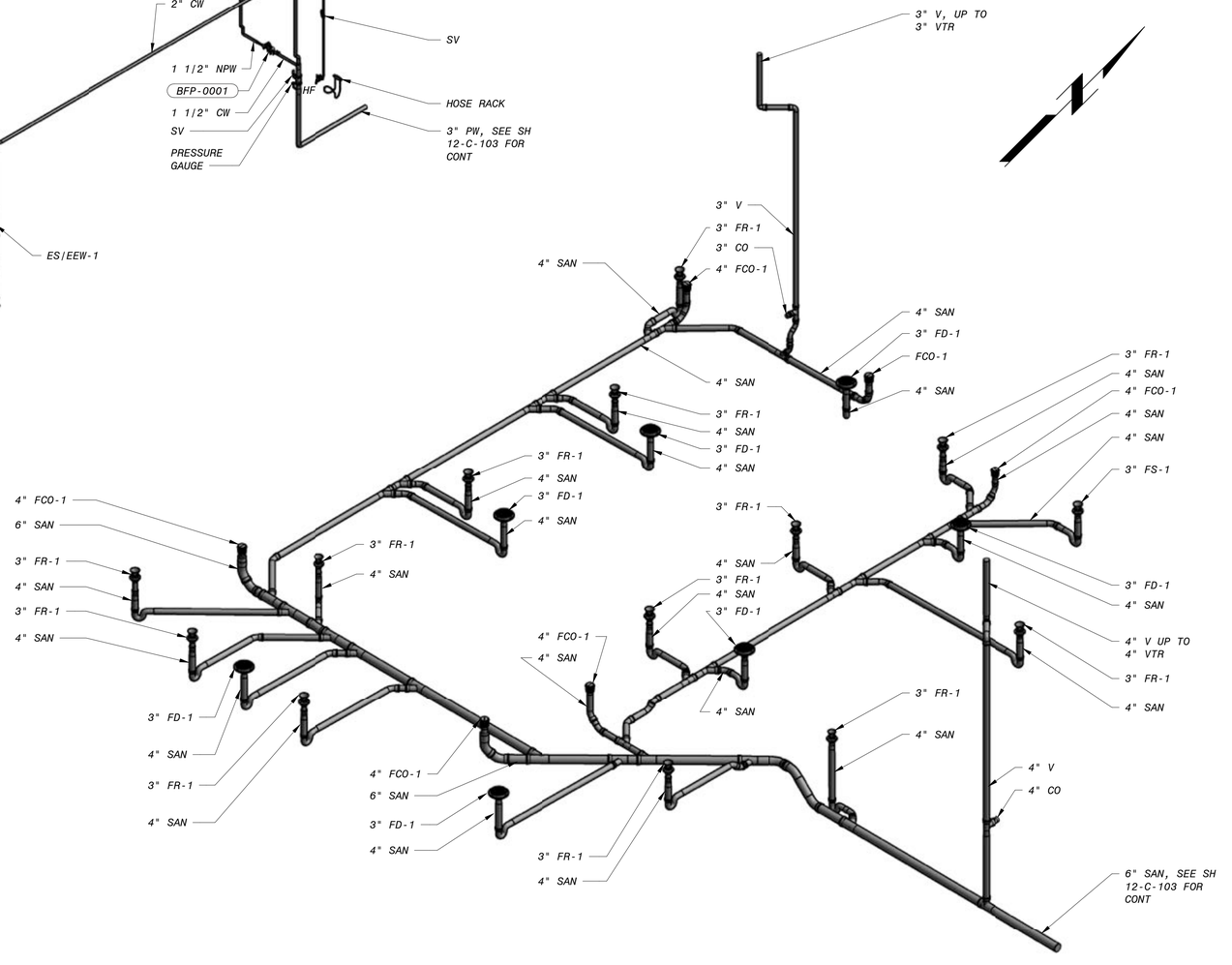

RISER ISOMETRIC - SANITARY

NO SCALE

90% SUBMITTAL- NOT FOR CONSTRUCTION

NO.	BY	CHK	APP	DATE	REVISIONS AND RECORD OF USE
C	YBM	AEC	RWC	3/31/2020	90% SUBMITTAL
B	YBM	AEC	RWC	7/30/2019	60% SUBMITTAL
A	YBM	AEC	RWC	3/5/2019	30% SUBMITTAL

REGISTERED PROFESSIONAL ENGINEER
RANDY W. CANTRELL
No. M36207
MECHANICAL
STATE OF CALIFORNIA

BLACK & VEATCH

JOINT VENTURE

BLACK & VEATCH

FILANC

CITY OF MORRO BAY
MORRO BAY WRF
RECLAMATION FACILITY (WRF)

RO/UV BUILDING
PLUMBING
RISER ISOMETRICS

DESIGNED: VAP
DETAILED: YBM
CHECKED: AEC
APPROVED: RWC
DATE: 3/31/2020

0 1/2 1
IF THIS BAR DOES NOT MEASURE 1" THEN DRAWING IS NOT TO FULL SCALE

PROJECT NO.
400530

50-P-701
SHEET
OF

PLOTTED: 3/26/2020 8:13:57 PM
D400530

SHEET KEYNOTES

1. 3" FR FOR SKID EQUIPMENT DRAIN. FOR CONT SEE SHT 50-I-001.
2. 3" FR FOR ANALYZER PANEL DRAIN. FOR CONT SEE SHT 52-I-001.
3. 3" FR FOR UV EQUIPMENT DRAIN. FOR CONT SEE SHT 52-I-001.
4. 3" FS-1 FOR CIP CARTRIDGE FILTER DRAIN. FOR CONT SEE SHT 51-I-010.
5. 3" FR FOR NEUTRALIZATION TANK DRAIN. FOR CONT SEE SHT 51-I-011.
6. 3" FR FOR ES-EEW-1 DRAIN.
7. 1/2" TRAP PRIMER PIPING TO ALL FD AND FR.
8. 3/4" NPW TO POLYMER BLENDER.
9. INSULATE AND HEAT TRACE EXPOSED LINE. REFERENCE SPEC 404211 AND 260511 FOR ADDITIONAL REQUIREMENTS.

GENERAL SHEET NOTES

1. PLUMBING EQUIPMENT TAGS FOR EVERYTHING ON THIS SHEET BEGINS WITH 72-PLUM.

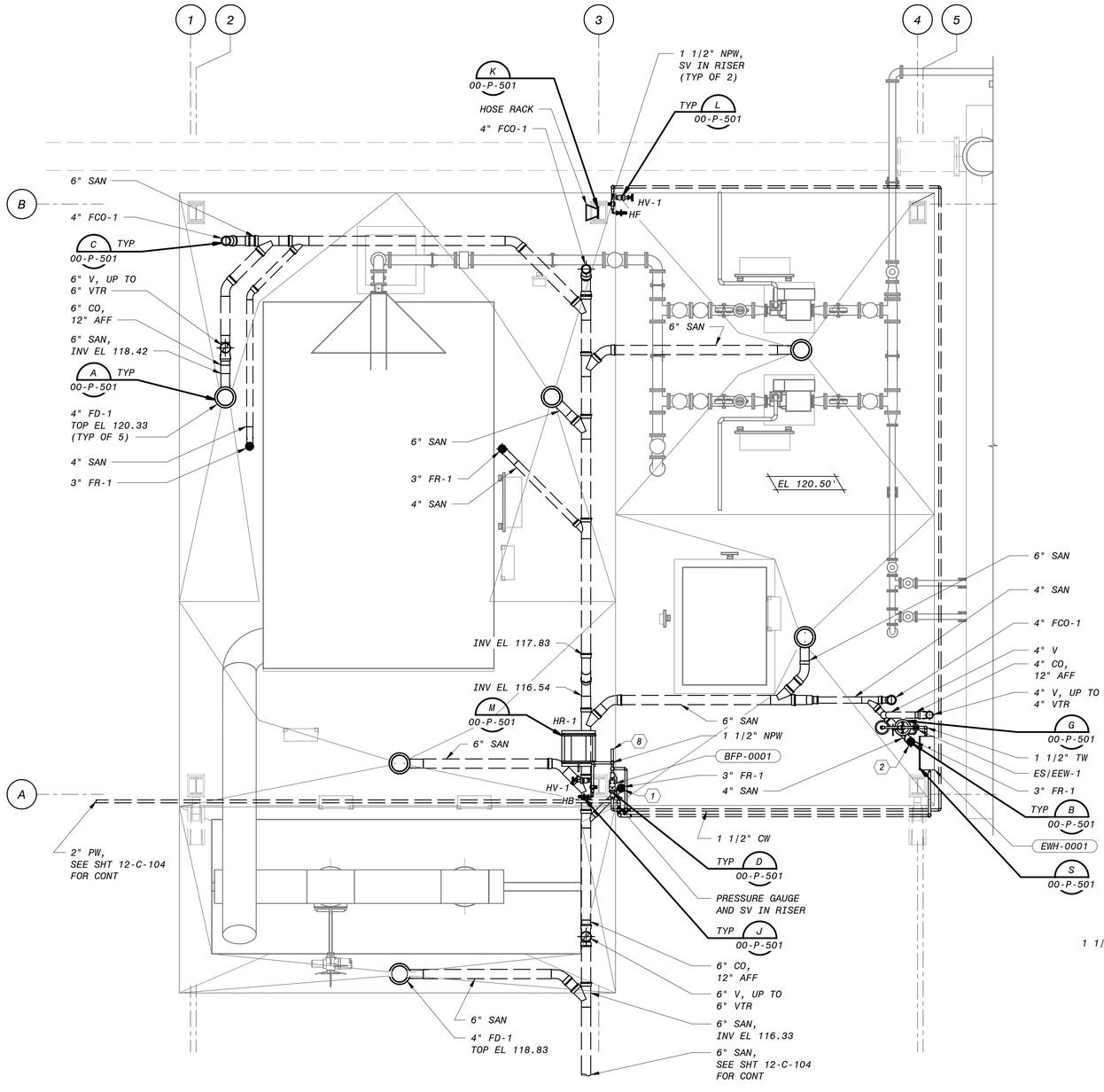

OPERATING LEVEL - PLUMBING PLAN

1/4" = 1'-0"

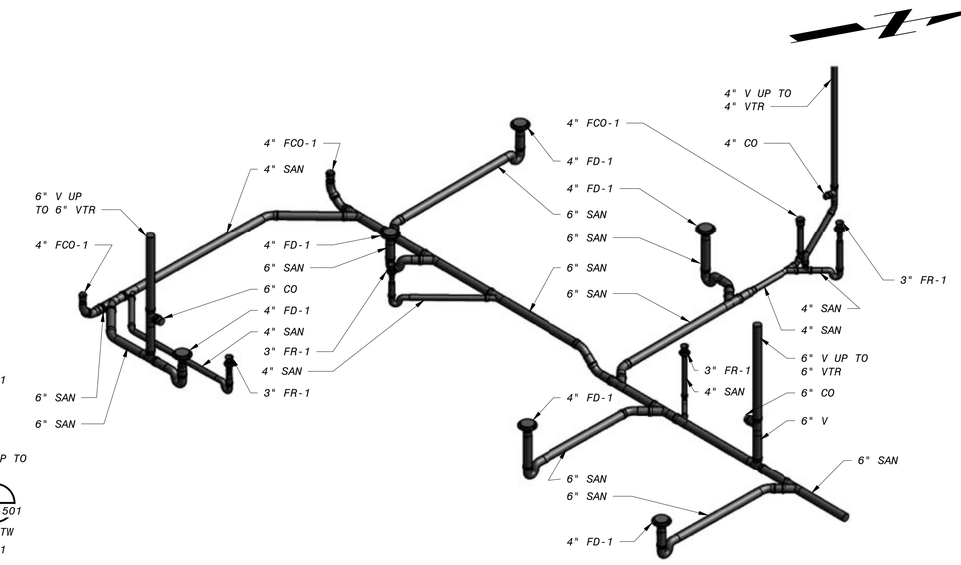

RISER ISOMETRIC - SANITARY

NO SCALE

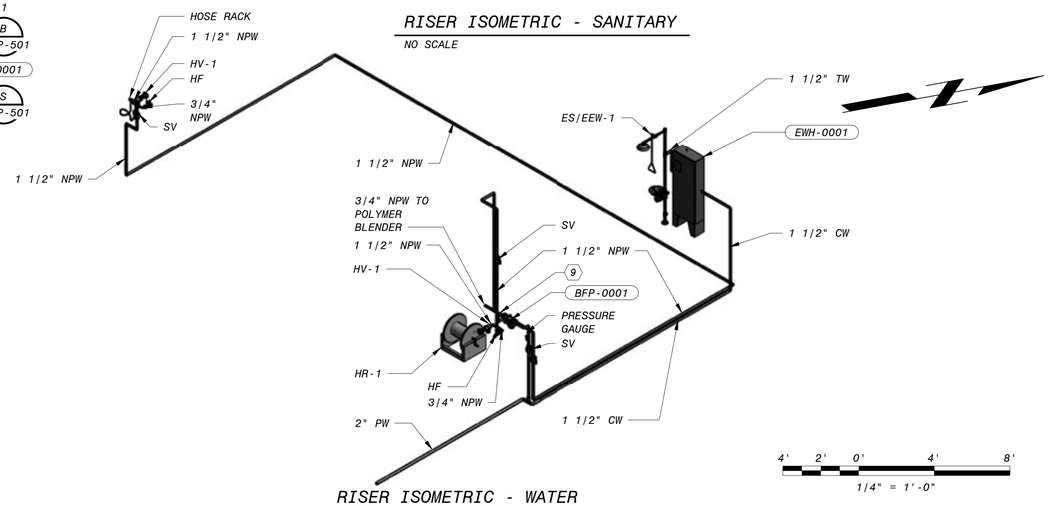

RISER ISOMETRIC - WATER

NO SCALE

4' 2' 0' 4' 8'

1/4" = 1'-0"

90% SUBMITTAL - NOT FOR CONSTRUCTION

NO.	BY	CHK	APP	DATE	REVISIONS AND RECORD OF USE
C	YBM	AEC	RWC	3/31/2020	90% SUBMITTAL
B	YBM	AEC	RWC	7/30/2019	60% SUBMITTAL
A	YBM	AEC	RWC	3/5/2019	30% SUBMITTAL

REGISTERED PROFESSIONAL ENGINEER
RANDY W. CANTRELL
No. M36207
MECHANICAL
STATE OF CALIFORNIA

BLACK & VEATCH
JOINT VENTURE
BLACK & VEATCH
FILANC

CITY OF MORRO BAY
MORRO BAY WRF
RECLAMATION FACILITY (WRF)

RESIDUALS AREA DEWATERING FACILITY
PLUMBING
PLAN AND RISER ISOMETRICS

DESIGNED:	VAP
DETAILED:	YBM
CHECKED:	AEC
APPROVED:	RWC
DATE:	3/31/2020

0 1/2 1

IF THIS BAR DOES NOT MEASURE 1" THEN DRAWING IS NOT TO FULL SCALE

PROJECT NO. 400530

72-P-101

SHEET OF

PLOTTED: 3/26/2020 8:26:23 PM

D400530

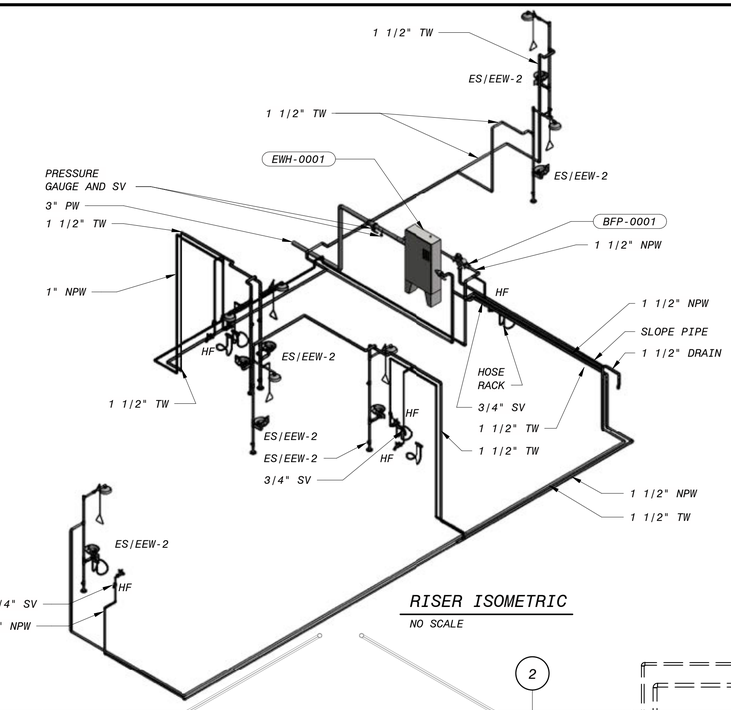

RISER ISOMETRIC

NO SCALE

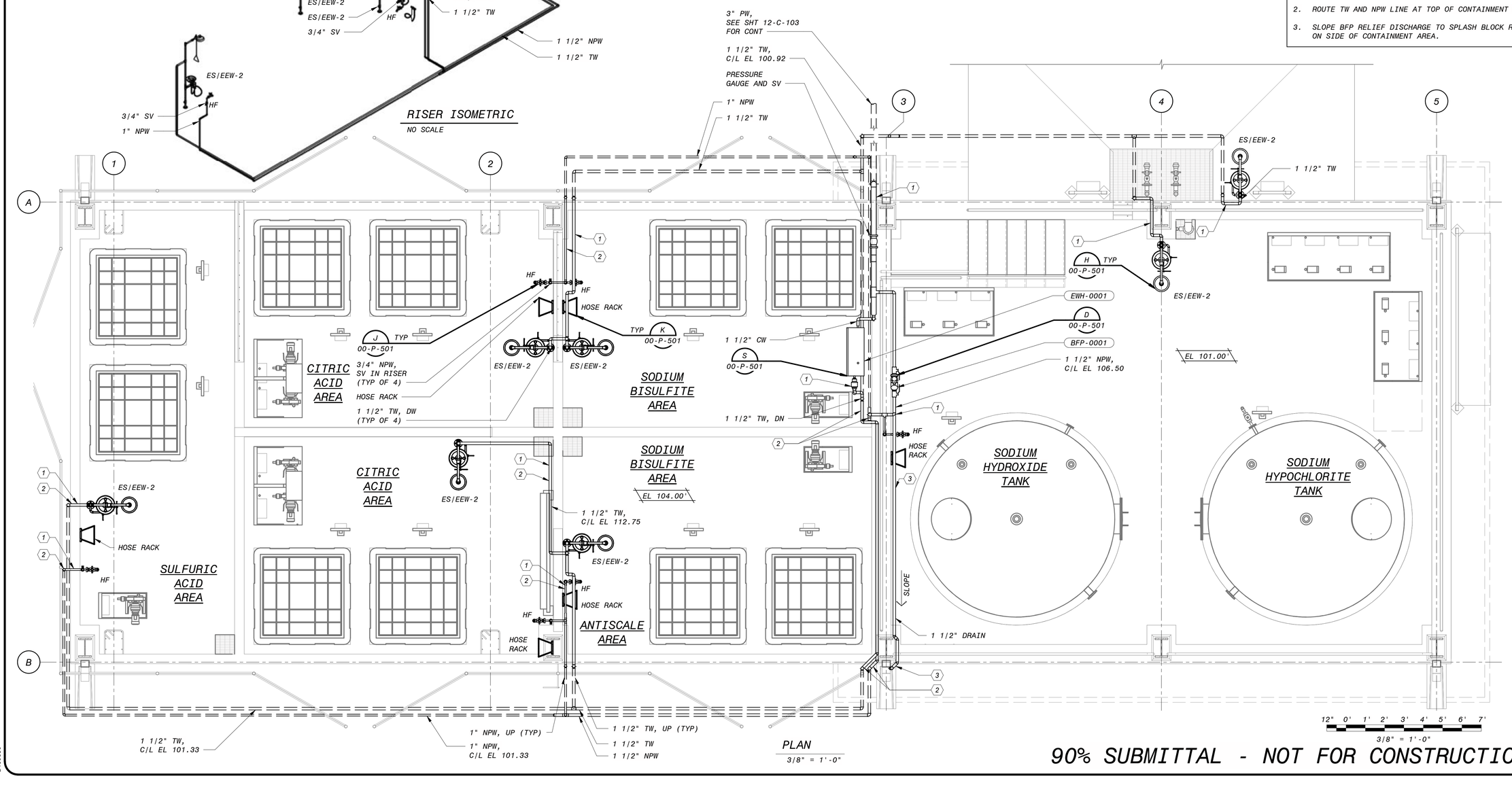

PLAN

3/8" = 1'-0"

GENERAL SHEET NOTES

1. PLUMBING EQUIPMENT TAGS FOR EVERYTHING ON THIS SHEET BEGINS WITH 90-PLUM.

SHEET KEYNOTES

1. INSULATE AND HEAT TRACE EXPOSED LINE, SET TEMP AT 60F. REFERENCE SPEC 200511 AND 260511 FOR ADDITIONAL REQUIREMENTS.
2. ROUTE TW AND NPW LINE AT TOP OF CONTAINMENT WALL.
3. SLOPE BFP RELIEF DISCHARGE TO SPLASH BLOCK ROUTE ON SIDE OF CONTAINMENT AREA.

NO.	BY	CHK	APP	DATE	REVISIONS AND RECORD OF USE
C	RKS	AEC	RWC		
B	MDS	AEC	RWC	3/31/2020	90% SUBMITTAL
A	MDS	AEC	RWC	7/30/2019	60% SUBMITTAL
				3/5/2019	30% SUBMITTAL

REGISTERED PROFESSIONAL ENGINEER
RANDY W. CANTRELL
No. M36207
MECHANICAL
STATE OF CALIFORNIA

BLACK & VEATCH

JOINT VENTURE

BLACK & VEATCH

FILANC

CITY OF MORRO BAY
MORRO BAY WRF
RECLAMATION FACILITY (WRF)

CHEMICAL FACILITY
PLUMBING
PLAN AND RISER ISOMETRIC

DESIGNED: SAM
DETAILED: MDS
CHECKED: AEC
APPROVED: RWC
DATE: 3/31/2020

0 1/2 1
IF THIS BAR DOES NOT MEASURE 1" THEN DRAWING IS NOT TO FULL SCALE

PROJECT NO.
400530

90-P-101
SHEET
OF

PLOTTED: 3/26/2020 8:32:16 PM
D400530

90% SUBMITTAL - NOT FOR CONSTRUCTION

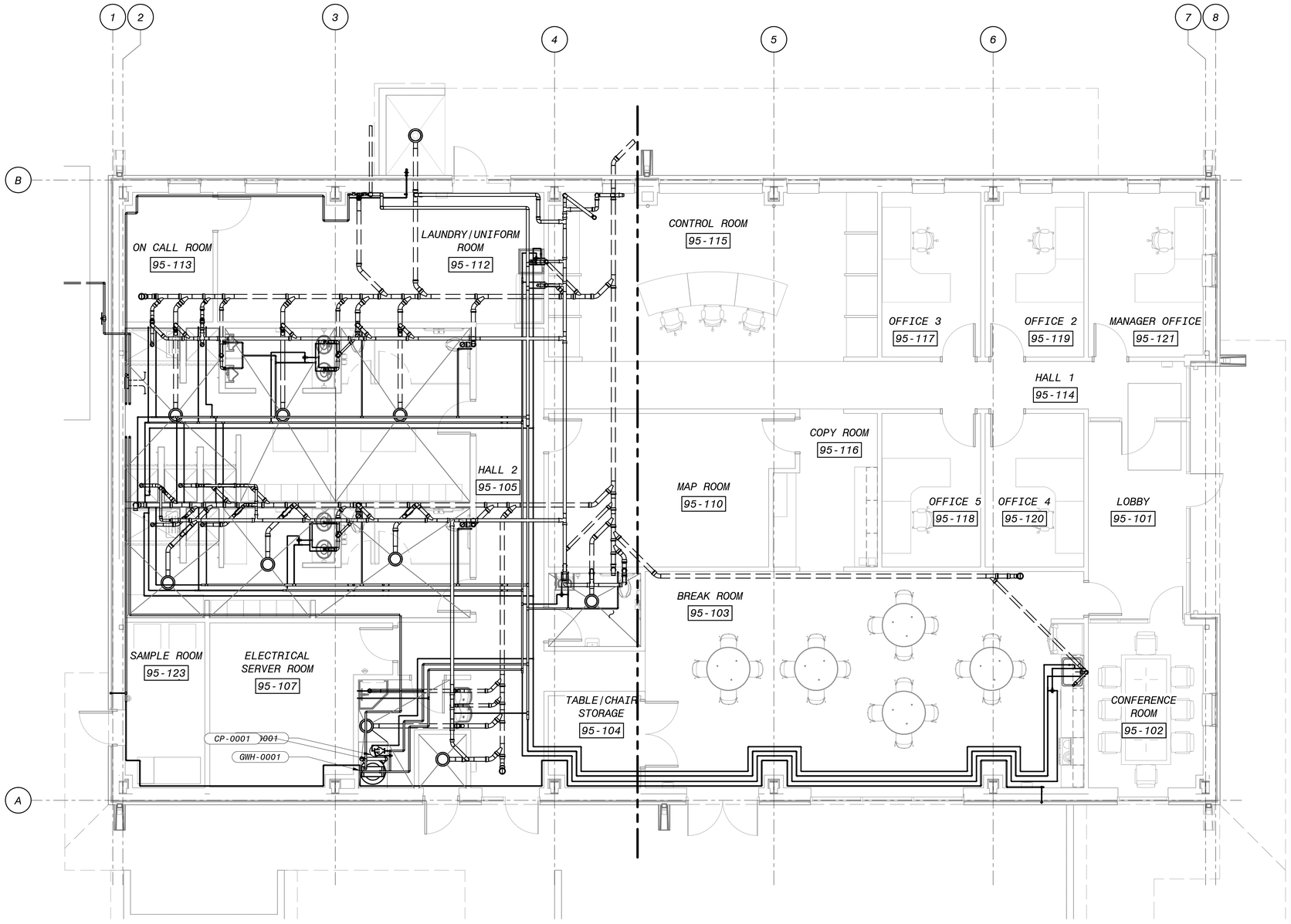

OVERALL OPERATING FLOOR PLAN

3/16" = 1'-0"

GENERAL SHEET NOTES

SHEET KEYNOTES

6" 4' 2' 0' 5' 10'

3/16" = 1'-0"

90% SUBMITTAL - NOT FOR CONSTRUCTION

NO.	BY	CHK	APP	DATE	REVISIONS AND RECORD OF USE
C	YBM	AEC	RWC	3/31/2020	90% SUBMITTAL
B	YBM	AEC	RWC	7/30/2019	60% SUBMITTAL
A	YBM	AEC	RWC	3/5/2019	30% SUBMITTAL

REGISTERED PROFESSIONAL ENGINEER
RANDY W. CANTRELL
No. M36207
MECHANICAL
STATE OF CALIFORNIA

BLACK & VEATCH

JOINT VENTURE

BLACK & VEATCH

FILANC

CITY OF MORRO BAY
MORRO BAY WRF
RECLAMATION FACILITY (WRF)

OPERATIONS BUILDING
PLUMBING
OVERALL OPERATING FLOOR PLAN

DESIGNED: SAM
DETAILED: YBM
CHECKED: AEC
APPROVED: RWC
DATE: 3/31/2020

0 1/2 1
IF THIS BAR DOES NOT MEASURE 1" THEN DRAWING IS NOT TO FULL SCALE

PROJECT NO.
400530

95-P-101
SHEET
OF

PLOTTED: 3/26/2020 8:48:48 PM
D400530

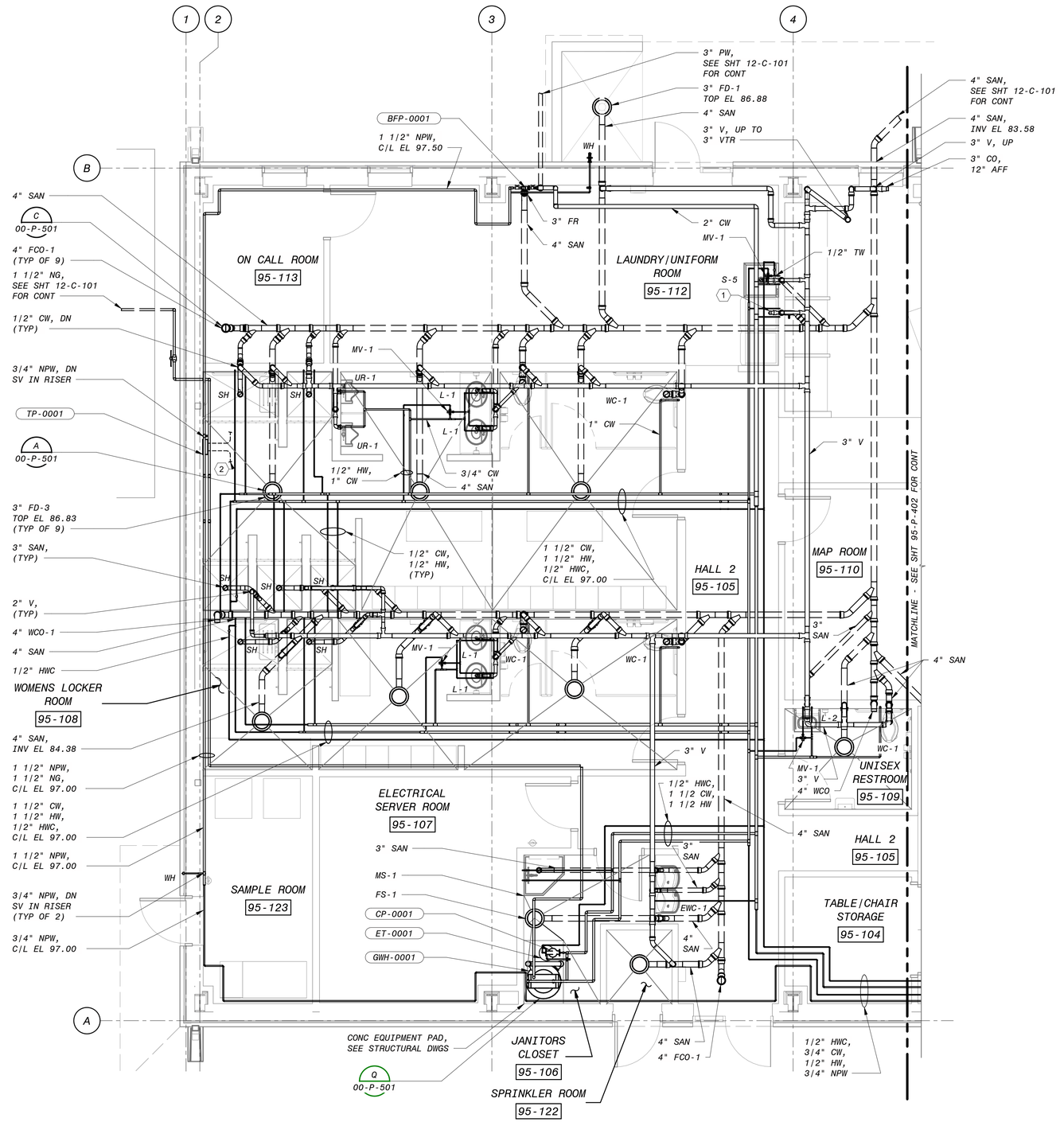

ENLARGED OPERATING FLOOR PLAN - WEST

1/4" = 1'-0"

GENERAL SHEET NOTES

1. PLUMBING EQUIPMENT TAGS FOR EVERYTHING ON THIS SHEET BEGINS WITH 95-PLUM.

SHEET KEYNOTES

1. 2" SAN PIPE CAPPED AT 12" AFF FOR WASHING MACHINE. 1/2"HW AND CW VALVED AND CAPPED FOR WASHING MACHINE.
2. 1/2" TRAP PRIMER PIPING TO FD, FS AND FR LOCATED IN ROOM 95-106, 95-108, 95-109, 95-111, 95-112 AND 95-122 FROM TRAP PRIMING PANEL LOCATED IN ROOM 95-111.

4' 2' 0' 4' 8'

1/4" = 1'-0"

90% SUBMITTAL - NOT FOR CONSTRUCTION

NO.	BY	CHK	APP	DATE	REVISIONS AND RECORD OF USE
C	YBM	RWC	AEC	3/31/2020	90% SUBMITTAL
B	YBM	RWC	AEC	7/30/2019	60% SUBMITTAL
A	YBM	RWC	AEC	3/5/2019	30% SUBMITTAL

REGISTERED PROFESSIONAL ENGINEER
RANDY W. CANTRELL
No. M36207
MECHANICAL
STATE OF CALIFORNIA

BLACK & VEATCH

JOINT VENTURE

BLACK & VEATCH

FILANC

CITY OF MORRO BAY
MORRO BAY WRF
RECLAMATION FACILITY (WRF)

OPERATIONS BUILDING
PLUMBING
ENLARGED OPERATING FLOOR PLAN - WEST

DESIGNED: VAP
DETAILED: YBM
CHECKED: AEC
APPROVED: RWC
DATE: 3/31/2020

0 1/2 1

IF THIS BAR DOES NOT MEASURE 1" THEN DRAWING IS NOT TO FULL SCALE

PROJECT NO.
400530

95-P-401
SHEET
OF

PLOTTED: 3/26/2020 8:45:28 PM
D400530

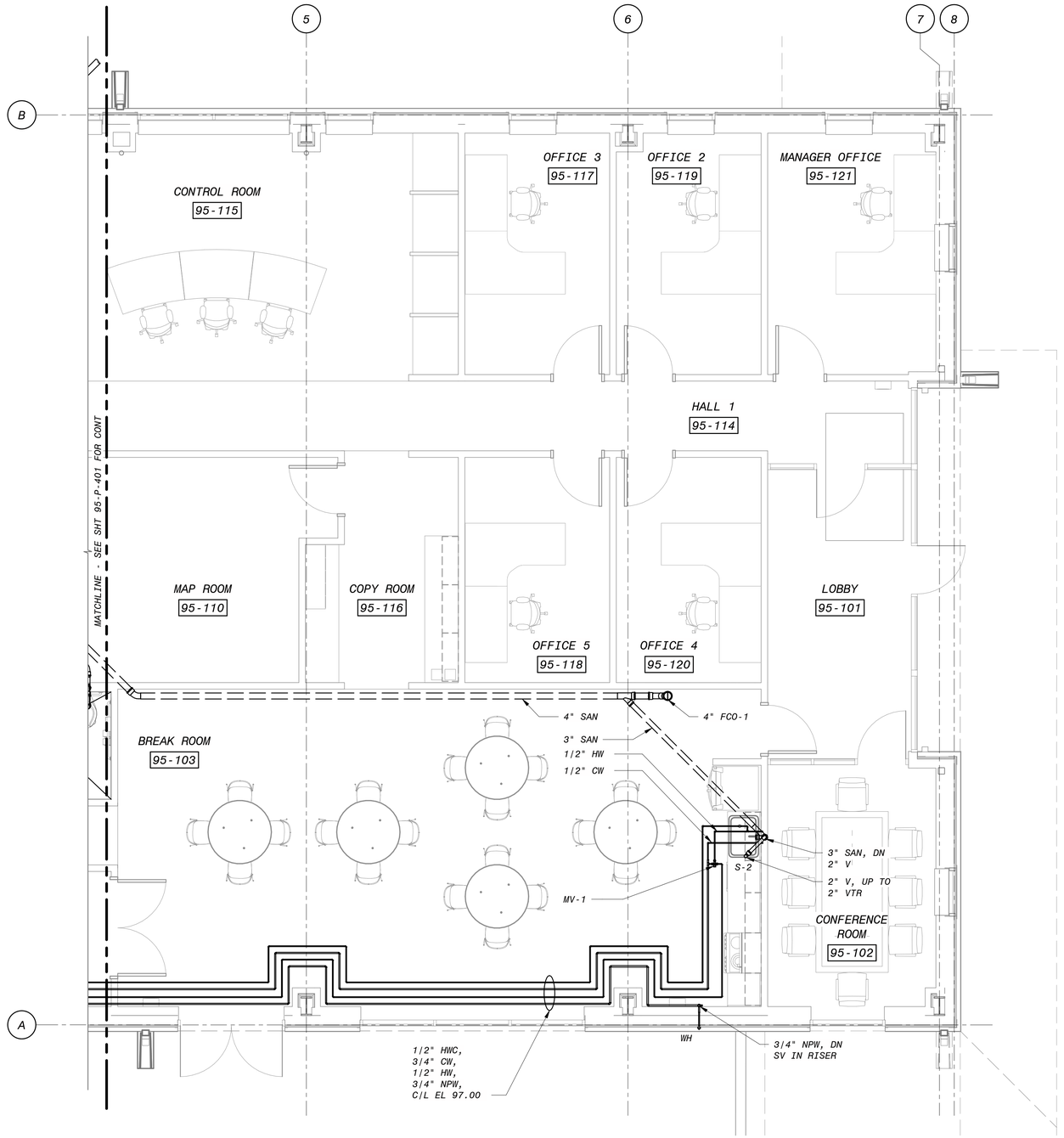

ENLARGED OPERATING FLOOR PLAN - EAST

1/4" = 1'-0"

GENERAL SHEET NOTES

1. PLUMBING EQUIPMENT TAGS FOR EVERYTHING ON THIS SHEET BEGINS WITH 95-PLUM.

SHEET KEYNOTES

4' 2' 0' 4' 8'

1/4" = 1'-0"

90% SUBMITTAL - NOT FOR CONSTRUCTION

NO.	BY	CHK	APP	DATE	REVISIONS AND RECORD OF USE
C	YBM	AEC	RWC	3/31/2020	90% SUBMITTAL
B	YBM	AEC	RWC	7/30/2019	60% SUBMITTAL
A	YBM	AEC	RWC	3/5/2019	30% SUBMITTAL

REGISTERED PROFESSIONAL ENGINEER
RANDY W. CANTRELL
No. M36207
MECHANICAL
STATE OF CALIFORNIA

BLACK & VEATCH
JOINT VENTURE
BLACK & VEATCH
FILANC

CITY OF MORRO BAY
MORRO BAY WRF
RECLAMATION FACILITY (WRF)

OPERATIONS BUILDING
PLUMBING
ENLARGED OPERATING FLOOR PLAN - EAST

DESIGNED: VAP
DETAILED: YBM
CHECKED: AEC
APPROVED: RWC
DATE: 3/31/2020

0 1/2 1
IF THIS BAR DOES NOT MEASURE 1" THEN DRAWING IS NOT TO FULL SCALE

PROJECT NO.
400530

95-P-402
SHEET
OF

PLOTTED: 3/26/2020 8:45:29 PM
D400530

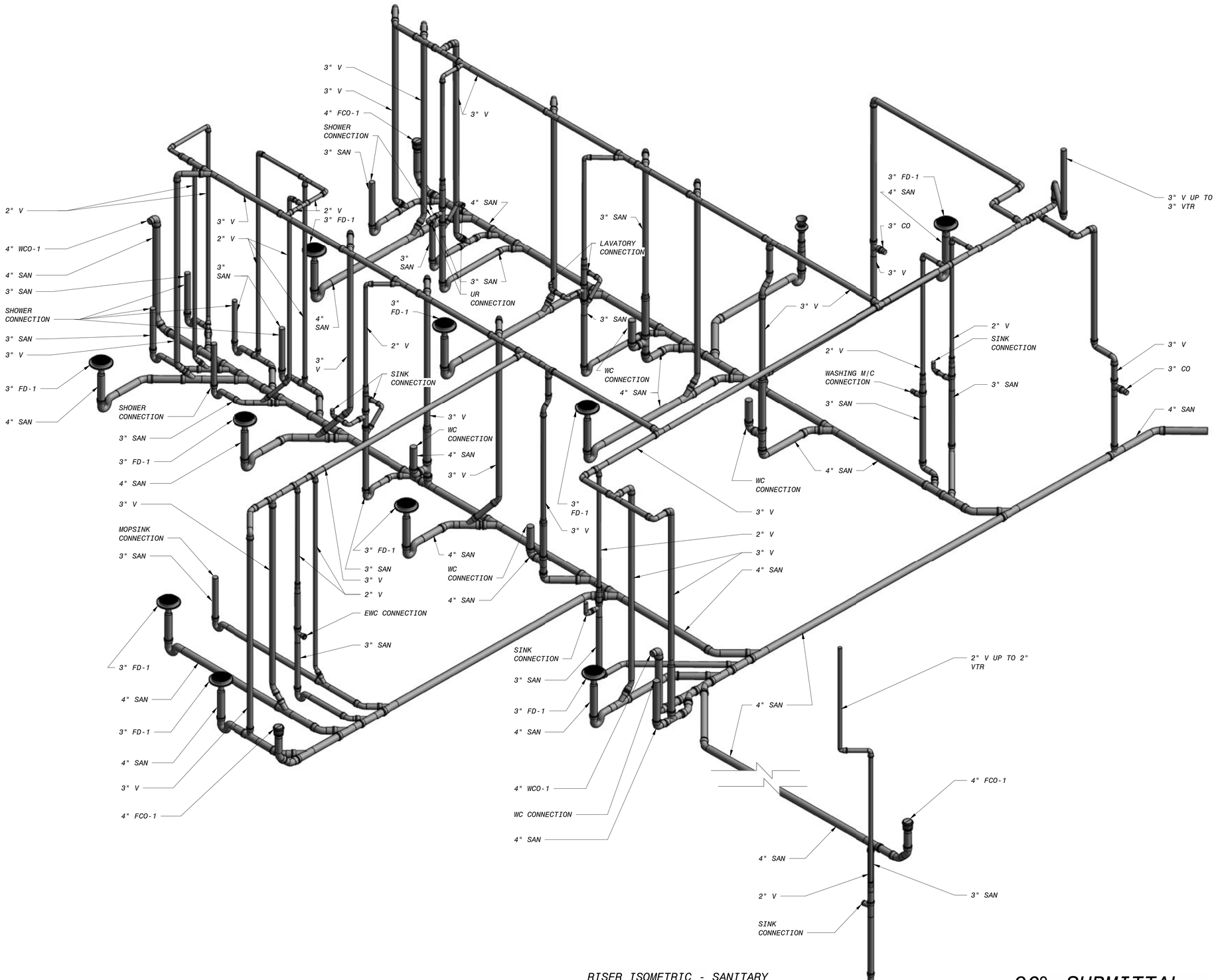

RISER ISOMETRIC - SANITARY

NO SCALE

90% SUBMITTAL - NOT FOR CONSTRUCTION

NO.	BY	CHK	APP	DATE	REVISIONS AND RECORD OF USE
C	YBM	AEC	RWC	3/31/2020	90% SUBMITTAL
B	YBM	AEC	RWC	7/30/2019	60% SUBMITTAL
A	YBM	AEC	RWC	3/5/2019	30% SUBMITTAL

REGISTERED PROFESSIONAL ENGINEER
RANDY W. CANTRELL
No. M36207
MECHANICAL
STATE OF CALIFORNIA

BLACK & VEATCH
JOINT VENTURE
BLACK & VEATCH
FILANC

CITY OF MORRO BAY
MORRO BAY WRF
RECLAMATION FACILITY (WRF)

OPERATIONS BUILDING
PLUMBING
RISER ISOMETRIC - SANITARY

DESIGNED: VAP
DETAILED: YBM
CHECKED: AEC
APPROVED: RWC
DATE: 3/31/2020

0 1/2 1
IF THIS BAR DOES NOT MEASURE 1" THEN DRAWING IS NOT TO FULL SCALE

PROJECT NO.
400530

95-P-701
SHEET
OF

PLOTTED: 3/26/2020 8:45:33 PM
D400530

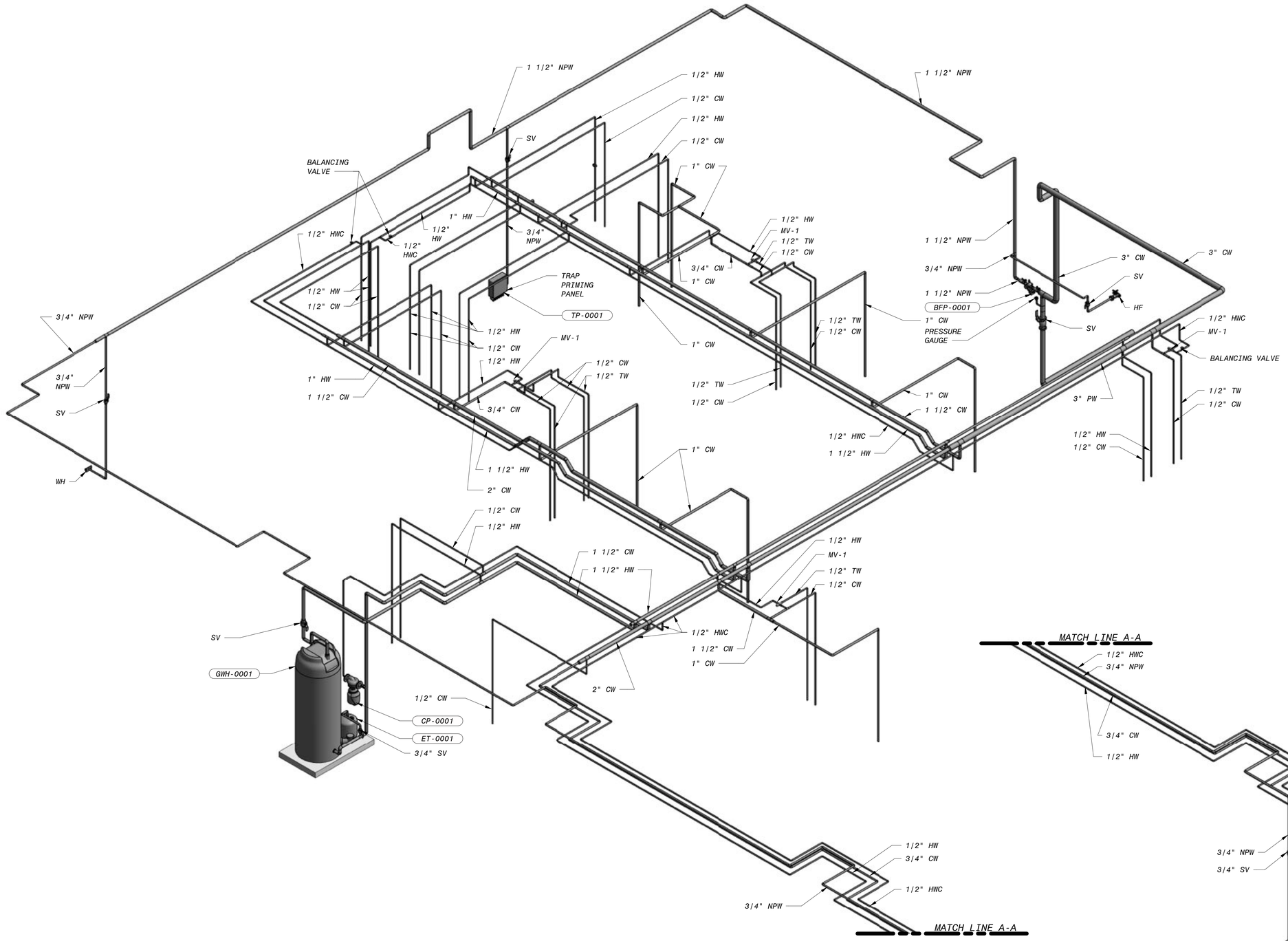

RISER ISOMETRIC - WATER

NO SCALE

90% SUBMITTAL - NOT FOR CONSTRUCTION

NO.	BY	CHK	APP	DATE	REVISIONS AND RECORD OF USE
C	YBM	AEC	RWC	3/31/2020	90% SUBMITTAL
B	YBM	AEC	RWC	7/30/2019	60% SUBMITTAL
A	YBM	AEC	RWC	3/5/2019	30% SUBMITTAL

REGISTERED PROFESSIONAL ENGINEER
RANDY W. CANTRELL
No. M36207
MECHANICAL
STATE OF CALIFORNIA

BLACK & VEATCH
JOINT VENTURE
BLACK & VEATCH
FILANC

CITY OF MORRO BAY
MORRO BAY WRF
RECLAMATION FACILITY (WRF)

OPERATIONS BUILDING
PLUMBING
RISER ISOMETRIC - WATER

DESIGNED: VAP
DETAILED: YBM
CHECKED: AEC
APPROVED: RWC
DATE: 3/31/2020

0 1/2 1
IF THIS BAR DOES NOT MEASURE 1" THEN DRAWING IS NOT TO FULL SCALE

PROJECT NO.
400530

95-P-702
SHEET
OF

PLOTTED: 3/26/2020 8:45:36 PM
D400530

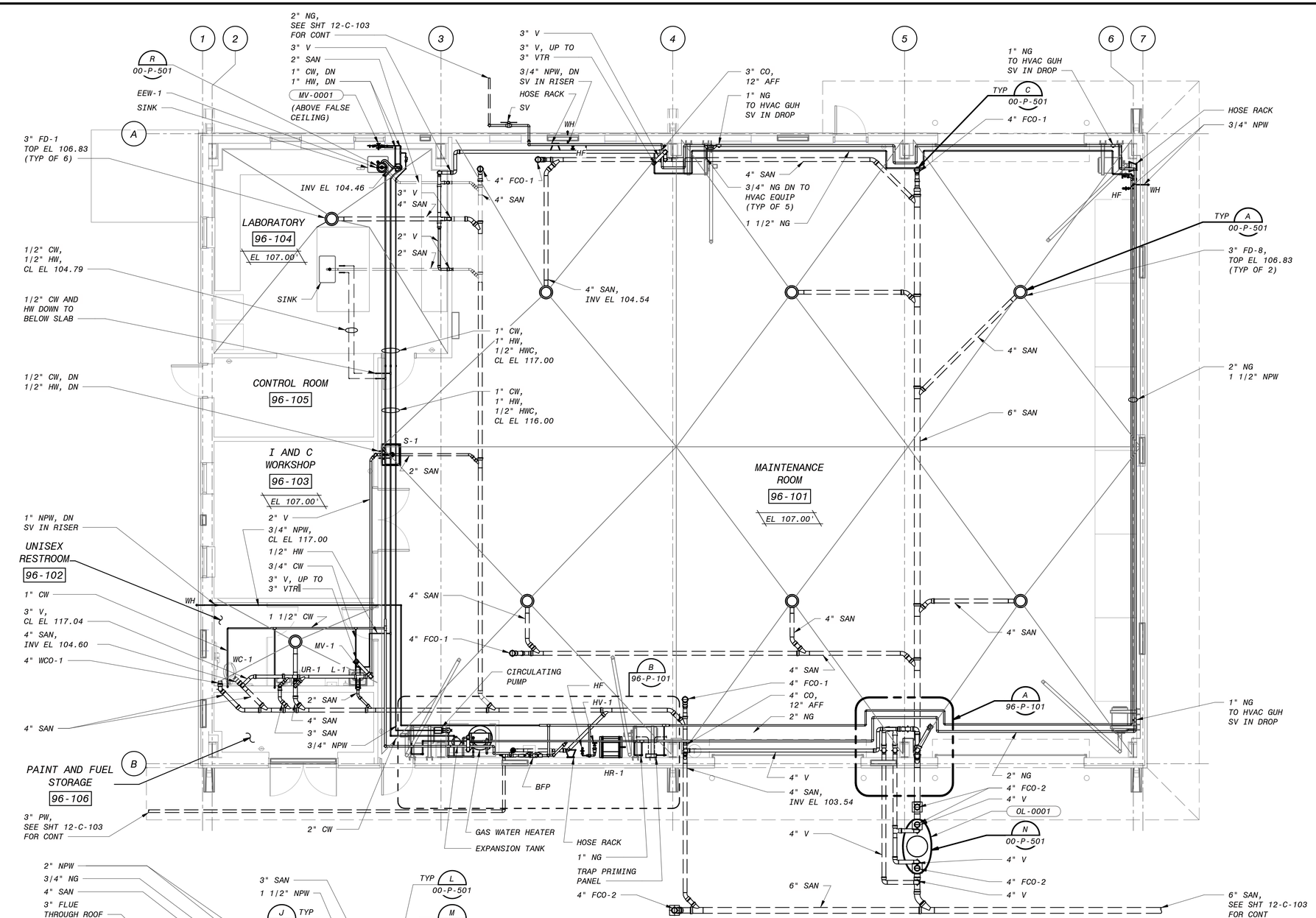

GENERAL SHEET NOTES

1. SEE LAB FURNITURE SPECIFICATION FOR SINKS AND FAUCETS IN LABORATORY.
2. PLUMBING EQUIPMENT TAGS FOR EVERYTHING ON THIS SHEET BEGINS WITH 96-PLUM.

SHEET KEYNOTES

1. 2" FR FOR BFP-0001 AND GWH-0001.
2. 1/2" TRAP PRIMER PIPING TO FD AND FR LOCATED IN ROOM 60-103, 96-104, 96-105 AND 96-106. FROM TRAP PRIMING PANEL LOCATED IN ROOM 96-101.

NO.	BY	CHK	APP	DATE	REVISIONS AND RECORD OF USE
C	YBM	AEC	RWC	3/31/2020	90% SUBMITTAL
B	YBM	AEC	RWC	7/30/2019	60% SUBMITTAL
A	YBM	AEC	RWC	3/5/2019	30% SUBMITTAL

REGISTERED PROFESSIONAL ENGINEER
RANDY W. CANTRELL
No. M36207
MECHANICAL
STATE OF CALIFORNIA

BLACK & VEATCH
JOINT VENTURE
BLACK & VEATCH
FILANC

CITY OF MORRO BAY
MORRO BAY WRF
RECLAMATION FACILITY (WRF)

MAINTENANCE BUILDING
PLUMBING
PLAN AND ENLARGED PLAN

DESIGNED: VAP
DETAILED: YBM
CHECKED: AEC
APPROVED: RWC
DATE: 3/31/2020

4' 2' 0' 4' 8'
1/4" = 1'-0"
0 1/2 1
IF THIS BAR DOES NOT MEASURE 1" THEN DRAWING IS NOT TO FULL SCALE
6" 4' 2' 0' 5' 10'
3/16" = 1'-0"

PROJECT NO.
400530

96-P-101
SHEET
OF

90% SUBMITTAL- NOT FOR CONSTRUCTION

PLOTTED: 3/26/2020 8:55:44 PM
D400530

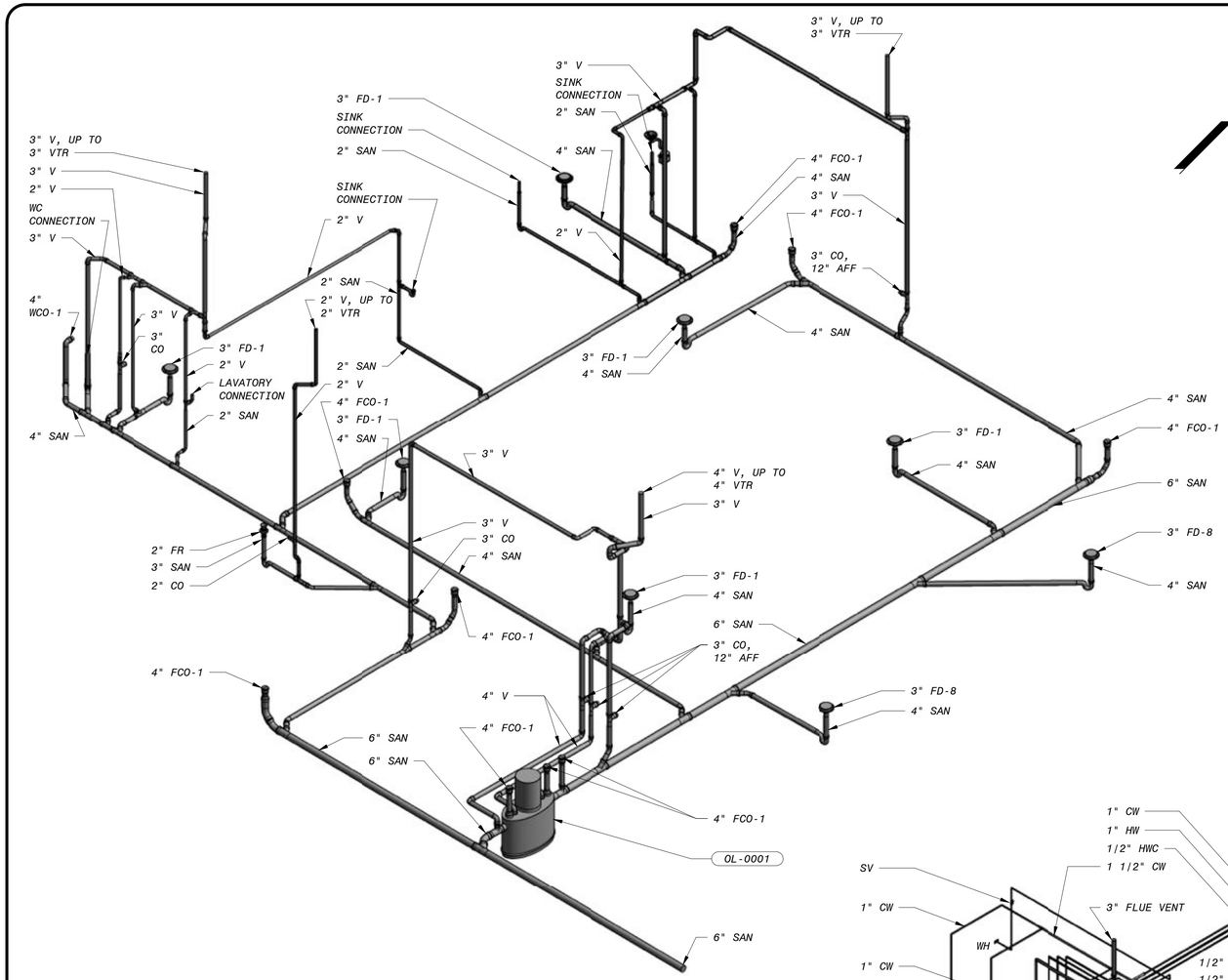

RISER ISOMETRIC - SANITARY

NO SCALE

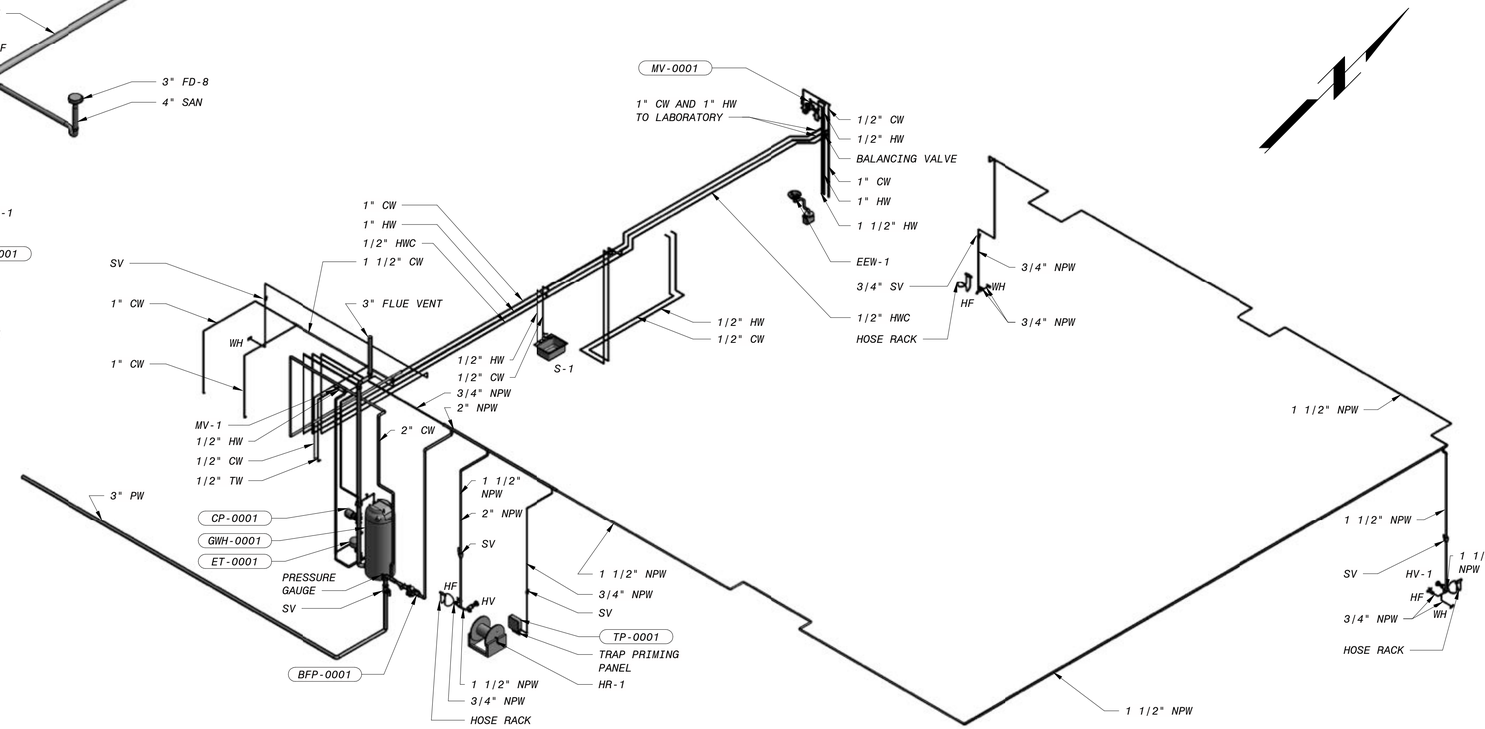

RISER ISOMETRIC - WATER SUPPLY

NO SCALE

90% SUBMITTAL- NOT FOR CONSTRUCTION

NO.	BY	CHK	APP	DATE	REVISIONS AND RECORD OF USE
C	YBM	AEC	RWC	3/31/2020	90% SUBMITTAL
B	YBM	AEC	RWC	7/30/2019	60% SUBMITTAL
A	YBM	AEC	RWC	3/5/2019	30% SUBMITTAL

REGISTERED PROFESSIONAL ENGINEER
RANDY W. CANTRELL
No. M36207
MECHANICAL
STATE OF CALIFORNIA

BLACK & VEATCH

JOINT VENTURE

BLACK & VEATCH

FILANC

CITY OF MORRO BAY
MORRO BAY WRF
RECLAMATION FACILITY (WRF)

MAINTENANCE BUILDING
PLUMBING
RISER ISOMETRICS

DESIGNED: VAP
DETAILED: YBM
CHECKED: AEC
APPROVED: RWC
DATE: 3/31/2020

0 1/2 1
IF THIS BAR DOES NOT MEASURE 1" THEN DRAWING IS NOT TO FULL SCALE

PROJECT NO.
400530

96-P-701
SHEET
OF

PLOTTED: 3/20/2020 8:55:48 PM
D400530

SYSTEM ABBREVIATIONS

CWR	CHILLED WHATER RETURN
CWS	CHILLED WATER SUPPLY
C	CONDENSATE DRAIN
CDWR	CONDENSER WATER RETURN
CDWS	CONDENSER WATER SUPPLY
HWR	HEATING WATER RETURN
HWS	HEATING WATER SUPPLY
LPC	LOW PRESSURE CONDENSATE
LPS	LOW PRESSURE STEAM (<15 PSIG)
R	REFRIGERANT

HVAC LEGEND

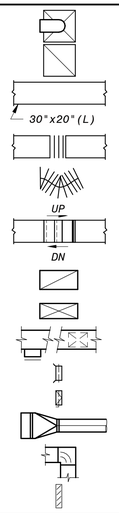

DIFFUSER FOR FLEXIBLE DUCT

RETURN DIFFUSER

DUCTWORK DIMENSIONS, THE FIRST DIMENSION IS THE SIDE SEEN OR SIDE THE LEADER LINE TOUCHES. SEE GENERAL MECHANICAL NOTES.

FLEXIBLE CONNECTION

FLEXIBLE DUCTWORK

INCLINED RISE (UP) OR DROP (DN) IN RESPECT TO DIRECTION OF AIRFLOW

NEGATIVE PRESSURE DUCT

POSITIVE PRESSURE DUCT

REGISTER, GRILLE OR DIFFUSER

ROUND OR FLEXIBLE DUCT TAKEOFF

VOLUME CONTROL DAMPER

ROUND TO SQUARE TRANSITION

TURNING VANES

LOUVER

AIR INLET & OUTLET IDENTIFICATIONS

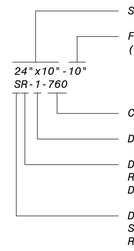

SIZE-LENGTH BY WIDTH (INCHES)

FLEXIBLE DUCT DIAMETER (INCHES, IF USED)

CFM THRU DEVICE

DEVICE DESIGNATION

DEVICE GROUP:
R-REGISTER, G-GRILLE,
D-DIFFUSER

DEVICE TYPE:
S-SUPPLY, E-EXHAUST,
R-RETURN, T-TRANSFER

CONTROLS & INSTRUMENTATION LEGEND

CS	CONTROL STATION
DG	DRAFT GAUGE
E E	ELECTRIC OPERATOR (EXPLOSION PROOF)
E M	ELECTRIC OPERATOR (MODULATING)
E	ELECTRIC OPERATOR (2 POSITION)
EVS 1	EMERGENCY VENTILATION SWITCH W/ NUMBER
FS	FLOW SWITCH
	GAUGE ACTIVATOR/ISOLATOR
	SUPPLY AIR DIFFUSER
	RETURN AIR DIFFUSER
H 1	HUMIDISTAT W/ NUMBER
LS	LEVEL SWITCH
PDS 1	PRESSURE DIFFERENTIAL SWITCH W/ NUMBER
P	PRESSURE GAUGE W/ SHUTOFF VALVE
PS	PRESSURE SWITCH
SMD 1	SMOKE DETECTOR W/ NUMBER
S	SOLENOID OPERATOR
	THERMOMETER - DIAL TYPE
	THERMOMETER - STEM TYPE
	VOLUME CONTROL DAMPER
TS 1	TEMPERATURE SENSOR WITH NUMBER
T 1	THERMOSTAT WITH NUMBER
V	VACUUM GAUGE W/ SHUTOFF VALVE

MECHANICAL ABBREVIATIONS

A

A	ALARM
AC	AIR COMPRESSOR
ACCU	AIR COOLED CONDENSING UNIT
AD	ACCESS DOOR
AF	AIR FLOW, AIRFOIL
AFD	ADJUSTABLE FREQUENCY DRIVE
AFF	ABOVE FINISH FLOOR
AFM	AIR FLOW MONITOR
AHU	AIR HANDLING UNIT
ALUM	ALUMINUM
AP	ACCESS PANEL
APPROX	APPROXIMATE
AS	AIR SEPARATOR
ATU	AIR TERMINAL UNIT
AUTO	AUTOMATIC
AVG	AVERAGE

B

B	BELT DRIVE, BLOW THROUGH
BDD	BACKDRAFT DAMPER
BF	BLIND FLANGE
BFF	BELOW FINISH FLOOR
BFP	BACKFLOW PREVENTER
BH	BASEBOARD HEATER
BI	BACKWARD INCLINED, BUILT-IN
	THERMOSTAT
BL	BOTTOM LEVEL
BLDG	BUILDING
BLR	BLOWER
BOD	BOTTOM OF DUCT ELEVATION
BOT	BOTTOM
BTUH	BRITISH THERMAL UNITS PER HOUR
BU	BELL-UP
BV	BALL VALVE

C

C	CHANNEL, CONVECTOR, COOLING, COOLING (MAKE ON RISE)
CB	CENTRIFUGAL BLOWER
CBD	COUNTERBALANCE BACKDRAFT DAMPER
CC	COOLING COIL
CD	CONTROL DAMPER
CDWP	CONDENSER WATER PUMP
CENTR	CENTRIFUGAL
CF	CABINET FAN
CFM	CUBIC FEET PER MINUTE
CH	CONVECTION HEATER
C/L	CENTERLINE
CO	CLEANOUT
CONC	CONCRETE
CONN	CONNECTION
CONT	CONTINUATION
CS	CONTROL STATION
CT	COOLING TOWER
CU	CONDENSING UNIT
CV	CHECK VALVE, CONTROL VALVE
CWP	CHILLED WATER PUMP

D

D	DIRECT DRIVE, DRAW-THRU
DB	DRY BULB
DDC	DIRECT DIGITAL CONTROL
DEH	DEHUMIDIFIER
DF	DUCT FAN
DIA	DIAMETER
DM	DUCT MOUNTED
DN	DOWN
DX	DIRECT EXPANSION

E

E	ELECTRIC, ELECTRIC OPERATOR, EXHAUST
EA	EACH, EXHAUST AIR
EAT	ENTERING AIR TEMPERATURE
EC	ECONOMIZER, EVAPORATIVE COOLER
ECH	ELECTRIC CABINET HEATER
ECP	EQUIPMENT CONTROL PANEL
EDH	ELECTRIC DUCT HEATER
EF	EXHAUST FAN
EFF	EFFICIENCY
EGS	EMERGENCY GAS SCRUBBER
EIH	ELECTRIC INFRARED HEATER
EL	ELEVATION
EP	EXPLOSION PROOF
EQUIP	EQUIPMENT
ES	EMERGENCY SWITCH
ESP	EXTERNAL STATIC PRESSURE
ET	EXPANSION TANK
EUH	ELECTRIC UNIT HEATER
EV	EXHAUST VALVE
EVS	EMERGENCY VENTILATION SWITCH
EWT	ENTERING WATER TEMPERATURE
EXIST	EXISTING

F

F	DEGREES FAHRENHEIT
FBD	FACE AND BYPASS DAMPER
FC	FORWARD CURVE, FAN COIL
FCU	FAN COIL UNIT
FD	FIRE DAMPER
FDB	DEGREES FAHRENHEIT DRY BULB
FEF	FUME EXHAUST FAN
FLEX	FLEXIBLE
FM	FLOW METER
FPM	FEET PER MINUTE
FR	FUNNEL RECEPTOR
FRP	FIBERGLASS REINFORCED PLASTIC PIPE
FS	FLOW SWITCH
FSD	COMBINATION FIRE/SMOKE DAMPER
FT	FEET, FIN TUBE HEATER
FUR	FURNACE
FWB	DEGREES FAHRENHEIT WET BULB

G

GA	GAUGE
GALV	GALVANIZED
GIH	GAS INFRARED HEATER
GPM	GALLONS PER MINUTE
GUH	GAS UNIT HEATER
GV	GATE VALVE

H

H	HAND OPERATOR, HEATING, HEATING (MAKE ON FALL), HEIGHT, HORIZONTAL, HUMIDISTAT
HC	HEATING COIL
HCH	HEATING WATER CABINET HEATER
HE	HEAT EXCHANGER
HO	HAND-OFF
HOA	HAND-OFF-AUTO
HP	HEAT PUMP, HORSEPOWER
HR	HEAT RECOVERY UNIT
HUH	HEATING WATER UNIT HEATER
HUM	HUMIDIFIER
HWB	HEATING WATER BOILER
HWP	HEATING WATER PUMP
HZ	HERTZ

I

I	INTAKE
ID	INSIDE DIAMETER
IN	INCHES
INV	INVERT

K

KW	KILOWATT

L

L	LINED DUCT, LOUVER
LAT	LEAVING AIR TEMPERATURE
LBS	POUNDS
LD	COMBINATION LOUVER/DAMPER
LI	LEVEL INDICATOR
LS	LEVEL SWITCH
LWT	LEAVING WATER TEMPERATURE

M

MAU	MAKEUP AIR UNIT
MAX	MAXIMUM
MCA	MINIMUM CIRCUIT AMPS
ME	MIST ELIMINATOR
MFR	MANUFACTURER
MOCP	MAXIMUM OVERCURRENT PROTECTION
MIN	MINIMUM
MOD	MODULATING

N

NC	NORMALLY CLOSED
NO	NORMALLY OPEN, NUMBER
NPSHR	NET POSITIVE SUCTION HEAD REQUIRED

O

OA	OUTSIDE AIR
OD	OUTSIDE DIAMETER

P

P	PNEUMATIC
PD	PRESSURE DROP (INCHES OF WATER FOR AIR, FEET OF WATER FOR FLUIDS)
PAC	PACKAGED AIR CONDITIONING UNIT
PAH	PACKAGED AIR HANDLING UNIT
PDS	PRESSURE DIFFERENTIAL SWITCH
PF	PROPELLER FAN
PHP	PACKAGED HEAT PUMP
PL	PLATE
POS	POSITION
PPM	PARTS PER MILLION
PROP	PROPELLER
PRS	PRESSURE REDUCING STATION
PRV	POWER ROOF VENTILATOR, PRESSURE REDUCING VALVE
PS	PRESSURE SWITCH
PSI	POUNDS PER SQUARE INCH
PSIA	POUNDS PER SQUARE INCH ABSOLUTE
PSIG	POUNDS PER SQUARE INCH GAUGE
PTAC	PACKAGED TERMINAL AIR CONDITIONER

R

RA	REACTIVATION AIR, RETURN AIR
RAC	ROOM AIR CONDITIONER
RCS	REMOTE CONTROL STATION
REQD	REQUIRED
RD	RETURN DIFFUSER
RH	RELATIVE HUMIDITY, ROOF HOOD
RSF	ROOF SUPPLY FAN

S

SA	SUPPLY AIR
SCD	SMOKE CONTROL DAMPER
SCFM	STANDARD CUBIC FEET PER MINUTE
SD	SUPPLY DIFFUSER
SF	SQUARE FEET, SUPPLY FAN
SH	SHEET
SIM	SIMILAR
SMD	SMOKE DETECTOR
SP	STATIC PRESSURE (INCHES OF WATER)
SPS	STATIC PRESSURE SENSOR
SS	STAINLESS STEEL
STD	STANDARD
SV	SERVICE VALVE, SHUTOFF VALVE, SOLENOID VALVE

T

T	THERMOSTAT
TCP	TEMPERATURE CONTROL PANEL
TCV	TEMPERATURE CONTROL VALVE
TE	TEMPERATURE ELEMENT
TL	TOP LEVEL
TS	TIP SPEED
TYP	TYPICAL

V

V	VERTICAL
VAC	VACUUM OUTLET
VANE	VANEAXIAL
VAV	VARIABLE AIR VOLUME
VCD	VOLUME CONTROL DAMPER
VF	VANEAXIAL FAN

W

W	WIDE FLANGE, WIDTH
WB	WET BULB
WC	WATER CHILLER WATER COLUMN
WF	WALL FAN
WG	WATER GAUGE
WH	WALL HEATER
WM	WALL MOUNTED
WPHP	WALL MOUNTED PACKAGED HEAT PUMP
WST	WATER STORAGE TANK
WT	WEIGHT
WV	WATER CONTROL VALVE

Z

ZD	ZONE DAMPER

GENERAL HVAC NOTES

1. THIS IS GENERAL LEGEND AND ABBREVIATION SHEET FOR HVAC DRAWINGS. SOME ITEMS CONTAINED ON THIS SHEET MAY NOT BE USED ON THIS SPECIFIC PROJECT.
2. ALL MECHANICAL HVAC WORK SHALL BE IN ACCORDANCE WITH THE FOLLOWING APPLICABLE CODES:
   2016 CALIFORNIA BUILDING CODE
   2016 CALIFORNIA MECHANICAL CODE
   2016 CALIFORNIA ENERGY CONSERVATION CODE
3. FOR ROOFTOP EQUIPMENT CURBS, FLUES, AND FLASHING DETAILS, SEE ARCHITECTURAL DRAWINGS.
4. SEE ARCHITECTURAL AND STRUCTURAL DRAWINGS FOR ALL EQUIPMENT BASE DETAILS.
5. "SCREENED" DELINEATION DENOTES EXISTING AND NEW FACILITIES AND IS FOR REFERENCE ONLY. "LIGHT" LINE DELINEATION DENOTES EXISTING MECHANICAL EQUIPMENT AND SYSTEMS. EXISTING FACILITY AND MECHANICAL SYSTEMS INFORMATION WAS TAKEN FROM PREVIOUS DRAWINGS, CONSTRUCTION RECORDS, DATA, AND FIELD SURVEY INFORMATION. ACTUAL LOCATION, ARRANGEMENT, AND DIMENSIONS SHALL BE FIELD VERIFIED AND WORK INSTALLED TO MEET ACTUAL CONDITIONS AND LOCATIONS ENCOUNTERED. "BOLD" (DARK) DELINEATION IS NEW WORK TO BE CONSTRUCTED UNDER THIS CONTRACT.
6. ALL MATERIALS, FITTINGS, COVERS, AND EQUIPMENT INSTALLED IN RETURN AIR PLENUMS SHALL BE NONCOMBUSTIBLE AND UL LISTED FOR USE IN RETURN AIR PLENUMS.
7. ALL PIPE AND DUCT PENETRATIONS THROUGH FIRE RESISTANCE RATED ASSEMBLIES SHALL BE PROVIDED WITH FIRESTOP SYSTEMS, EQUIPMENT AND ACCESSORIES TO RESIST THE PASSAGE OF FIRE, SMOKE AND OTHER GASES. THE ORIGINAL FIRE RESISTANCE RATING OF THE ASSEMBLY PENETRATED SHALL BE MAINTAINED FOR ALL TYPES OF PENETRATIONS.
8. METAL ROOF DECKING OR BOTTOM CHORD OF BAR JOISTS SHALL NOT BE USED FOR THE SUPPORT OF EQUIPMENT, PIPING, OR DUCTWORK.
9. ALL HANGERS, BRACKETS, OR BRACES FOR PIPING, DUCTWORK AND EQUIPMENT ARE NOT INDICATED ON THE DRAWINGS. REFER TO THE SPECIFICATIONS FOR SUPPORT REQUIREMENTS NOT SHOWN ON THE PLANS.
10. OUTSIDE AIR INLETS SHALL BE LOCATED A MINIMUM OF 10' AWAY FROM ANY EXHAUST AIR OR PLUMBING VENT OUTLET.
11. ALL EQUIPMENT, PIPING AND DUCTWORK FINAL LOCATIONS SHALL BE COORDINATED TO AVOID INTERFERENCES WITH STRUCTURE, OTHER PIPING, EQUIPMENT, DUCTWORK, AND CONDUIT. UNLESS SPECIFICALLY DIMENSIONED, THE PIPE AND DUCTWORK ROUTING SHOWN IS INTENDED TO INDICATE GENERAL LOCATION ONLY. INSTALL DUCTWORK TO ALLOW FOR PIPING TO BE ROUTED NEAR WALLS.
12. ALL PIPING AND DUCTWORK SHALL BE ROUTED AS HIGH AS POSSIBLE WITH A MINIMUM HEIGHT OF 8'-0" ABOVE THE WALKING SURFACE UNLESS OTHERWISE INDICATED BY A CENTERLINE OR BOTTOM OF DUCT ELEVATION.
13. DUCTWORK SHALL BE FABRICATED, REINFORCED, SUPPORTED AND SEALED FOR OPERATING PRESSURES INDICATED IN THE SCHEDULES FOR THE EQUIPMENT IT SERVES. ALL DUCTWORK SHALL HAVE A MINIMUM SMACNA PRESSURE CLASSIFICATION OF ONE INCH.
14. DUCT SIZES INDICATED ARE CLEAR DIMENSIONS INSIDE THE DUCT OR DUCT LINING. SHEET METAL SIZES ARE LARGER FOR INTERNALLY LINED DUCTWORK.
15. MINIMUM INSULATION THICKNESSES FOR DUCTWORK SHALL BE AS INDICATED IN THE SPECIFICATIONS UNLESS OTHERWISE INDICATED ON THE PLANS WITH A "L" OR "W" DESIGNATION. WHERE AN INSULATION THICKNESS IS INDICATED ON THE DRAWINGS, IT SHALL GOVERN. THE FOLLOWING DENOTES THE DIFFERENT INSULATION THICKNESSES INDICATED ON THE DRAWINGS:
    L,L1 - 1 INCH INTERNALLY LINED W,W1 - 1 INCH EXTERNALLY WRAPPED
    L15 - 1.5 INCH INTERNALLY LINED W15 - 1.5 INCH EXTERNALLY WRAPPED
    L2 - 2 INCH INTERNALLY LINED W2 - 2 INCH EXTERNALLY WRAPPED
16. DUCT CONNECTIONS TO EQUIPMENT, PIPING SIZES TO EQUIPMENT, AND EQUIPMENT SUPPORTS SHALL BE VERIFIED AND ADJUSTED TO MATCH ACTUAL EQUIPMENT FURNISHED.
17. THE LOCATION OF PIPING AND VALVES TO THE AIR HANDLING EQUIPMENT SHALL NOT INTERFERE WITH FILTER REMOVAL OR AIR HANDLING EQUIPMENT SERVICING.
18. ROOFTOP EQUIPMENT SHALL NOT BE LOCATED SUCH THAT ACCESS TO CONTROLS AND TO PERFORM SERVICE FOR EQUIPMENT IS LOCATED WITHIN 10 FEET OF THE BUILDING EDGE.
19. CONTROL DAMPER SIZES SHALL MATCH DIMENSIONS OF ASSOCIATED LOUVER UNLESS OTHERWISE INDICATED.
20. SEISMIC RESTRAINTS/BRACING SHALL BE PROVIDED FOR ALL EQUIPMENT, DUCTWORK, AND ACCESSORIES IN ACCORDANCE WITH THE LATEST SMACNA SEISMIC RESTRAINT MANUAL AND LOCAL BUILDING CODES. CONTRACTOR SHALL BE RESPONSIBLE FOR ALL SEISMIC SUPPORTS AND ADDITIONAL/MISCELLANEOUS STEEL REQUIRED FOR PROPER INSTALLATION OF SUPPORTS. SUPPORTS AND SEISMIC RESTRAINTS DESIGN SUBMITTALS SHALL BEAR THE STAMP AND SIGNATURE OF A AN ENGINEER LICENSED IN THE STATE OF CALIFORNIA.
21. INSULATION SHALL BE PROVIDED FOR EQUIPMENT, PIPING AND DUCT SYSTEMS AS INDICATED IN THE SPECIFICATIONS.

90% SUBMITTAL- NOT FOR CONSTRUCTION

NO.	BY	CHK	APP	DATE
C	RKS	LDA	RWC	3/31/2020
B	RKS	LDA	RWC	7/30/2019
A	RKS	LDA	RWC	3/5/2019

REVISIONS AND RECORD OF USE

REGISTERED PROFESSIONAL ENGINEER
RANDY W. CANTRELL
No. M36207
MECHANICAL
STATE OF CALIFORNIA

BLACK & VEATCH
JOINT VENTURE
BLACK & VEATCH
FILANC

CITY OF MORRO BAY
MORRO BAY WRF
RECLAMATION FACILITY (WRF)

HVAC
LEGENDS, ABBREVIATIONS AND GENERAL NOTES

DESIGNED: SAM
DETAILED: RKS
CHECKED: LDA
APPROVED: RWC
DATE: 3/31/2020

0 1/2 1
IF THIS BAR DOES NOT MEASURE 1" THEN DRAWING IS NOT TO FULL SCALE

PROJECT NO.
400530

00-H-001
SHEET
OF

PLOTTED: 3/20/2020 9:24:50 AM
D400530

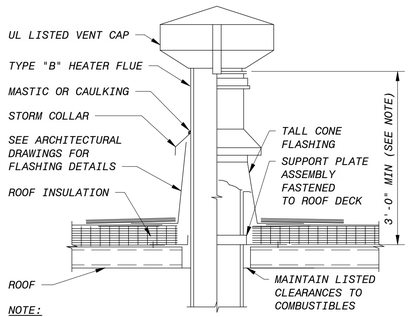

NOTE:
FLUE HEIGHT SHALL BE INCREASED SUCH THAT VENT CAP IS NOT LESS THAN 2' HIGHER THAN ANY PORTION OF THE BUILDING WITHIN 10'.

A FLUE
NO SCALE

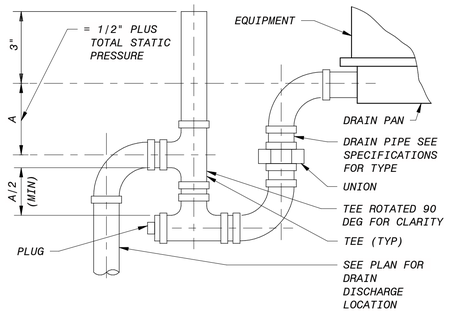

B DRAIN PAN TRAP - DRAW THROUGH
NO SCALE

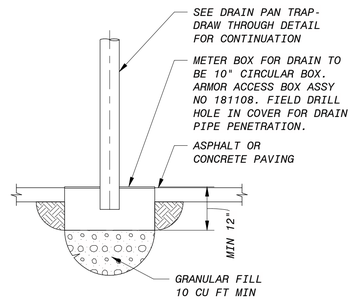

C CONDENSATE DRAIN SUMP
NO SCALE

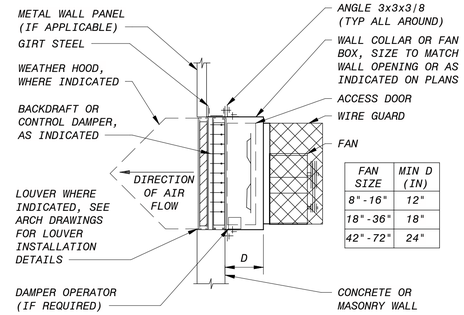

FAN SIZE	MIN D (IN)
8"-16"	12"
18"-36"	18"
42"-72"	24"

D PROPELLER FAN
NO SCALE

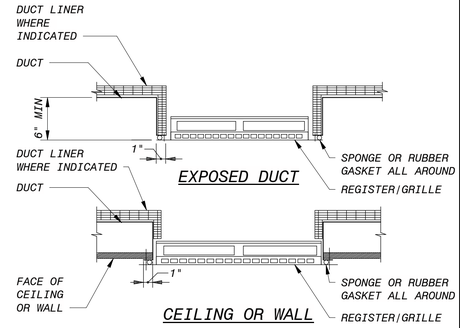

E REGISTER/GRILLE
NO SCALE

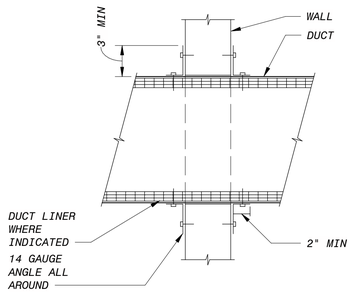

F WALL PENETRATION - INTERIOR
NO SCALE

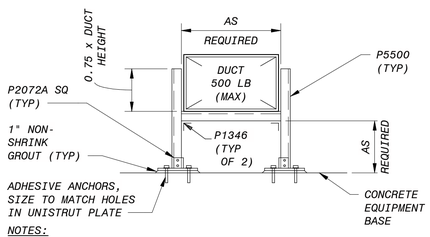

NOTES:
1. DISTANCE BETWEEN SUPPORTS APPROXIMATELY 10 FEET OR AS INDICATED ON PLANS.
2. USE HVAC DUCT CONSTRUCTION STANDARDS (SMACNA) TO DETERMINE WEIGHT OF DUCT.
3. PART NUMBERS USED REFLECT UNISTRUT PRODUCTS. USE UNISTRUT EQUAL PRODUCTS.
4. UNISTRUT MATERIAL TO MATCH DUCT MATERIAL.

G DUCT SUPPORT
NO SCALE

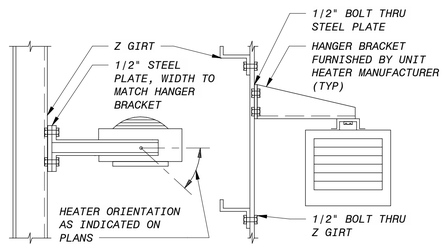

H ELECTRIC UNIT HEATER SUPPORT
NO SCALE

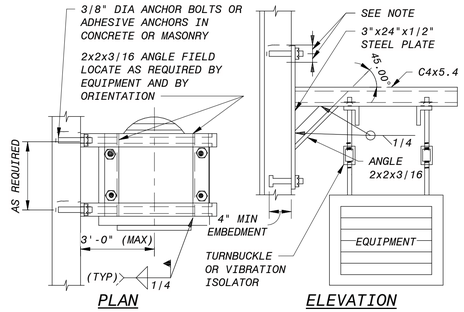

NOTES:
MASONRY WALLS SHALL BE SOLIDLY GROUTED 4" MIN, ALL SIDES OF ANCHORS.

J WALL HANGER - 4 ROD - EQUIPMENT SUPPORT - STRUCT MEMBERS
NO SCALE

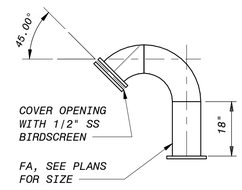

K GOOSENECK INTAKE/EXHAUST
NO SCALE

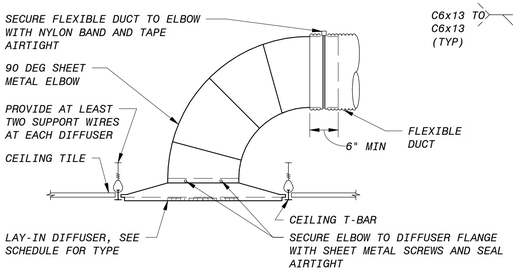

L CEILING DIFFUSER - HORIZONTAL DUCT CONNECTION
NO SCALE

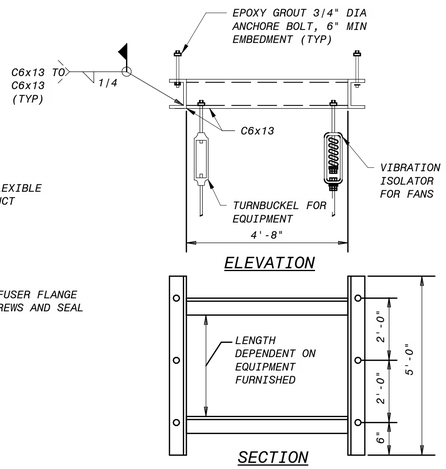

M DUCT FAN SUPPORT
NO SCALE

NO.	BY	CHK	APP	DATE	REVISIONS AND RECORD OF USE
C	RKS	LDA	RWC	3/31/2020	90% SUBMITTAL
B	RKS	LDA	RWC	7/30/2019	60% SUBMITTAL
A	RKS	LDA	RWC	3/5/2019	30% SUBMITTAL

REGISTERED PROFESSIONAL ENGINEER
RANDY W. CANTRELL
No. M36207
MECHANICAL
STATE OF CALIFORNIA

BLACK & VEATCH JOINT VENTURE
BLACK & VEATCH
FILANC

CITY OF MORRO BAY
MORRO BAY WRF
RECLAMATION FACILITY (WRF)

HVAC DETAILS

DESIGNED: SAM
DETAILED: RKS
CHECKED: LDA
APPROVED: RWC
DATE: 3/31/2020

0 1/2 1
IF THIS BAR DOES NOT MEASURE 1" THEN DRAWING IS NOT TO FULL SCALE

PROJECT NO.
400530

00-H-501
SHEET
OF

90% SUBMITTAL - NOT FOR CONSTRUCTION

PLOTTED: 3|26|2020 9:24:50 AM
D400530

AIR HANDLING UNIT SCHEDULE

UNIT NUMBER	LOCATION	MANUFACTURER	MODEL	AIRFLOW (CFM)	ESP (IN WC)	ORIENTATION	INDOOR FAN MOTOR HP	DRIVE	POWER SUPPLY		COOLING				HEATING			FILTER DATA		VIBRATION ISOLATION	APPROX WEIGHT (LBS)	NOTES
									VOLTS	PHASE	EAT (FDB)	EAT (FWB)	CAPACITY (BTUH) SENSIBLE	CAPACITY (BTUH) TOTAL	EAT (FDB)	TYPE	CAPACITY (BTUH) / (KW)	TYPE	THICKNESS (IN)			
95-HVAC-AHU-0001	95-OPERATION BUILDING	AAON	---	1480	1	HORIZONTAL	1	DIRECT	480	3	88	64	43600	93900	88	ELECTRIC	62300 (28)	PLEATED	2	INTERNAL	873	1,2

CONDENSING UNIT/HEAT PUMP SCHEDULE

UNIT NUMBER	LOCATION	MANUFACTURER	MODEL	COOLING				HEATING OUTPUT CAPACITY (BTUH)/KW	POWER SUPPLY		MINIMUM CIRCUIT AMPACITY	ARI MINIMUM EFFICIENCY	MATCHED WITH INDOOR UNIT	APPROX WEIGHT (LBS)	NOTES
				CAPACITY (BTUH)	MINUMUM CAPACITY	SUCTION TEMPERATURE (F) MINIMUM	SUCTION TEMPERATURE (F) MAXIMUM		VOLTS	PHASE					
95-HVAC-HP-0001	95-OPERATION BUILDING	---	HR_MULTI V 5	240000	1	45	50	204098/22.1	480	3	41.4	22.5	95-HVAC-FCU-0001 TO 0012	312	1,2
95-HVAC-HP-0002	95-OPERATION BUILDING	---	---	93900	1	45	50	62300/28	480	3	44	11.4	95-HVAC-AHU-0001	873	1,2
95-HVAC-HP-0003	95-OPERATION BUILDING	---	MULTI V S	38000	1	45	50	34408/3.7	208	1	25	17	95-HVAC-FCU-0013	873	1,2
95-HVAC-HP-0004	95-OPERATION BUILDING	---	MULTI V S	38000	1	45	50	34408/3.7	208	1	25	17	95-HVAC-FCU- 0014	873	1,2

FAN COIL UNIT SCHEDULE

UNIT NUMBER	LOCATION	MODEL	TYPE	AIRFLOW (CFM)	AIR PD (IN WC)	EAT (FDB)	EAT (FWB)	LAT (FDB)	COOLING CAPACITY (BTUH) SENSIBLE	COOLING CAPACITY (BTUH) TOTAL	HEATING CAPACITY (BTUH) TOTAL	HEATING CAPACITY (BTUH) HEATING DB	POWER VOLTS	POWER PHASE	POWER Hz	POWER RLA	PIPING CONNECTION (IN) LIQUID	PIPING CONNECTION (IN) GAS	NOTES
95-HVAC-FCU-0001	AREA 95 OPERATION BUILDING - BREAK ROOM	ARNU543M3A4	DUCT_HIGH_STATIC	1482	0.5	79.8	69.6	62.3	28100	32300	44400	72	208	1	60	2.5	3/8	3/4	1,2
95-HVAC-FCU-0002	AREA 95 OPERATION BUILDING - CONFERENCE ROOM	ARNU183TQD4	CASSETTE_4WAY	396	---	85.8	69.6	60.8	10700	12400	14100	72	208	1	60	0.2	1/4	1/2	1
95-HVAC-FCU-0003	AREA 95 OPERATION BUILDING-LOBBY	ARNU183TNA4	CASSETTE_4WAY	565	---	83.7	69.6	65.1	11400	11700	20500	72	208	1	60	0.6	3/8	5/8	1
95-HVAC-FCU-0004	AREA 95 OPERATION BUILDING - ON CALL & LAUNDRY	ARNU123BHA4	DUCT_HIGH_STATIC	230	0.375	82.3	69.6	60.3	5500	5900	5600	72	208	1	60	1.1	1/4	1/2	1,2
95-HVAC-FCU-0005	AREA 95 OPERATION BUILDING - MANAGER OFFICE	ARNU123TRD4	CASSETTE_4WAY	247	---	89.6	69.6	66.3	6300	6500	10600	72	208	1	60	0.2	1/4	1/2	1
95-HVAC-FCU-0006	AREA 95 OPERATION BUILDING - OFFICE 2 & 3	ARNU123M2A4	DUCT_HIGH_STATIC	512	0.375	66.5	69.6	66.5	6700	7100	14500	72	208	1	60	2.3	1/4	1/2	1,2
95-HVAC-FCU-0007	AREA 95 OPERATION BUILDING - MAP ROOM AND COPY ROOM	ARNU183M2A4	DUCT_HIGH_STATIC	512	0.375	84.6	69.6	64.8	11000	11000	17000	72	208	1	60	2.3	1/4	1/2	1,2
95-HVAC-FCU-0008	AREA 95 OPERATION BUILDING - MAP ROOM AND COPY ROOM	ARNU153M2A4	DUCT_HIGH_STATIC	512	0.375	80.2	69.6	64.9	8500	8900	14500	72	208	1	60	2.3	1/4	1/2	1,2
95-HVAC-FCU-0009	AREA 95 OPERATION BUILDING - MAP ROOM AND COPY ROOM	ARNU283M2A4	DUCT_HIGH_STATIC	845	0.375	86.1	69.6	66.7	17500	17500	30800	72	208	1	60	2.3	1/4	1/2	1,2
95-HVAC-FCU-0010	AREA 95 OPERATION BUILDING - CONTROL ROOM & HALL1	ARNU363M2A4	DUCT_HIGH_STATIC	1031	0.5	83.7	69.6	64.2	21800	22400	32700	72	208	1	60	2.3	3/8	5/8	1,2
95-HVAC-FCU-0011	AREA 95 OPERATION BUILDING - LAUNDRY AND ON CALL ROOM	ARNU183M2A4	DUCT_HIGH_STATIC	673	0.375	86.5	69.6	69.3	12400	12700	22500	72	208	1	60	2.3	1/4	1/2	1,2
95-HVAC-FCU-0012	AREA 95 OPERATION BUILDING - SAMPLE STORAGE	ARNU093TRD4	CASSETTE_4WAY	283	---	86.8	69.6	70.6	5000	5000	9700	72	208	1	60	0.2	1/4	1/2	1
95-HVAC-FCU-0013	AREA 95 OPERATION BUILDING - ELECTRICAL/SERVER ROOM	ARNU363SVA4	WALL_MOUNTED	671	---	91.5	69.6	54.9	26500	26500	16600	72	208	1	60	0.8	3/8	5/8	1
95-HVAC-FCU-0014	AREA 95 OPERATION BUILDING - ELECTRICAL/SERVER ROOM	ARNU363SVA4	WALL_MOUNTED	671	---	91.5	69.6	54.9	26500	26500	16600	72	208	1	60	0.8	3/8	5/8	1

FAN SCHEDULE

UNIT NUMBER	LOCATION	FAN TYPE	AIRFLOW (CFM)	ESP (IN WC)	MOTOR HP	POWER SUPPLY VOLTS	POWER SUPPLY PHASE	MINIMUM WHEEL DIAMETER (IN)	WHEEL TYPE	DRIVE	FILTER DATA TYPE	FILTER DATA THICKNESS (IN)	VIBRATION ISOLATION	APPROX WEIGHT (LBS)	NOTES
50-HVAC-EF-0001	AREA 50 RO/UV BUILDING	PF	5400	0.375	3/4	480	3	24	P	BELT	---	---	INTERNAL	145	2
50-HVAC-EF-0002	AREA 50 RO/UV BUILDING	PF	5400	0.375	3/4	480	3	24	P	BELT	---	---	INTERNAL	145	2
95-HVAC-DF-0001	AREA 95-OPERATION - MENS AND WOMENS LOCKER ROOM	DF	1480	0.75	3/4	480	3	10	C	BELT	---	---	SPRING HANGER	145	1,2
96-HVAC-DF-0001	AREA 96 MAINTENACE BUILDING-SERVICE TRUCKBAY	DF	2800	0.625	1.5	480	3	13	C	BELT	---	---	SPRING HANGER	113	1,2
96-HVAC-DF-0002	AREA 96 MAINTENACE BUILDING UNISEX ROOM	DF	270	0.125	1/4	120	1	7	P	DIRECT	---	---	INTERNAL	145	1,2
96-HVAC-DF-0003	AREA 96 MAINTENACE PAINT AND FUEL STORAGE ROOM	DF	100	0.125	1/4	120	1	7	P	DIRECT	---	---	INTERNAL	145	1,2
96-HVAC-EF-0001	AREA 96 MAINTENACE BUILDING	PF	6000	0.625	1	480	3	30	P	BELT	---	---	INTERNAL	101	1,2
96-HVAC-EF-0002	AREA 96 MAINTENACE BUILDING	PF	6000	0.625	1	480	3	30	P	BELT	---	---	INTERNAL	101	1,2

HEATER SCHEDULE

UNIT NUMBER	LOCATION	TYPE	UNIT ORIENTATION	AIR FLOW (CFM)	AIR PD (IN WC)	OUTPUT CAPACITY (BTUH)	OUTPUT CAPACITY (KW)	WATER FLOW (GPM)	WATER PD (FT)	MOTOR HP	POWER SUPPLY VOLTS	POWER SUPPLY PHASE	APPROX WEIGHT (LBS)	NOTES
50-HVAC-EUH-0001	AREA 50 RO/UV BUILDING-ELECTRICAL ROOM	EUHHD	HORIZONTAL	410	---	---	2.6	---	---	1/40	208	1	32	2,3
50-HVAC-GUH-0001	AREA 50 RO/UV BUILDING	GUH	HORIZONTAL	550	---	37350	-	---	---	1/20	120	1	100	2,4
50-HVAC-GUH-0002	AREA 50 RO/UV BUILDING	GUH	HORIZONTAL	550	---	37350	-	---	---	1/20	120	1	100	2,4
50-HVAC-GUH-0003	AREA 50 RO/UV BUILDING	GUH	HORIZONTAL	550	---	37350	-	---	---	1/20	120	1	100	2,4
50-HVAC-GUH-0004	AREA 50 RO/UV BUILDING	GUH	HORIZONTAL	550	---	37350	-	---	---	1/20	120	1	100	2,4
96-HVAC-GUH-0001	AREA 96 MAINTENACE BUILDING	GUH	HORIZONTAL	550	---	37350	---	---	---	1/20	120	1	100	2,4
96-HVAC-GUH-0002	AREA 96 MAINTENACE BUILDING	GUH	HORIZONTAL	550	---	37350	---	---	---	1/20	120	1	100	2,4
96-HVAC-GUH-0003	AREA 96 MAINTENACE BUILDING	GUH	HORIZONTAL	550	---	37350	---	---	---	1/20	120	1	100	2,4
96-HVAC-GUH-0004	AREA 96 MAINTENACE BUILDING	GUH	HORIZONTAL	550	---	37350	---	---	---	1/20	120	1	100	2,4
96-HVAC-GUH-0005	AREA 96 MAINTENACE BUILDING	GUH	HORIZONTAL	550	---	37350	---	---	---	1/20	120	1	100	2,4

PACKAGED AIR CONDITIONING UNIT/HEAT PUMP SCHEDULE

UNIT NUMBER	LOCATION	MANUFACTURER	INDOOR FAN AIRFLOW (CFM)	INDOOR FAN ESP (IN WG)	INDOOR FAN MOTOR HP	INDOOR FAN DRIVE	POWER SUPPLY VOLTS	POWER SUPPLY PHASE	MINIMUM CIRCUIT AMPACITY	COOLING EAT (FDB)	COOLING EAT (FWB)	COOLING CAPACITY (BTUH) SENSIBLE	COOLING CAPACITY (BTUH) TOTAL	MIN CAPACITY STAGES	HEATING EAT	HEATING TYPE	HEATING CAPACITY (BTUH)	HEATING MINIMUM HEAT STAGES	DISCHARGE DIRECTION	ARI MINIMUM EFFICIENCY	OA (CFM)	FILTER DATA TYPE	FILTER DATA THICKNESS (IN)	ECONOMIZER DATA TYPE	ECONOMIZER DATA CONTROLS	APPROX WEIGHT (LBS)	NOTES
50-HVAC-PHP-0001	50-ELECTRICAL ROOM	TRANE	2500	0.75	1	BELT	480	3	15	89.7	---	72700	75000	1	72	AUXILIARY ELECTRIC	23700	1	HORIZONTAL	11	100	PLEATED	2	POWER EXHAUST	DIFFERENTIAL DRY BULB	1218	1
80-HVAC-WPHP-0001	80-ELECTRICAL ROOM	BARD	1000	0.375	1/2	BELT	480	3	14	89.2	---	36100	38400	1	72	AUXILIARY ELECTRIC	40400	1	HORIZONTAL	10	100	PLEATED	2	---	---	340	1,2
80-HVAC-WPHP-0002	80-ELECTRICAL ROOM	BARD	1000	0.375	1/2	BELT	480	3	14	89.2	---	36100	38400	1	72	AUXILIARY ELECTRIC	40400	1	HORIZONTAL	10	100	PLEATED	2	---	---	340	1,2
80-HVAC-WPHP-0003	80-ELECTRICAL ROOM	BARD	1000	0.375	1/2	BELT	480	3	14	89.2	---	36100	38400	1	72	AUXILIARY ELECTRIC	40400	1	HORIZONTAL	10	100	PLEATED	2	---	---	340	1,2
80-HVAC-WPHP-0004	80-ELECTRICAL ROOM	BARD	1000	0.375	1/2	BELT	480	3	14	89.2	---	36100	38400	1	72	AUXILIARY ELECTRIC	40400	1	HORIZONTAL	10	100	PLEATED	2	---	---	340	1,2
96-HVAC-PHP-0001	96-LABOROTORY, CONTROL ROOM AND I & C WORKSHOP	TRANE	3150	1.375	1	BELT	480	3	15	85.3	---	65600	79700	1	72	AUXILIARY ELECTRIC	39800	1	HORIZONTAL	11	400	PLEATED	2	POWER EXHAUST	DIFFERENTIAL DRY BULB	1185	1,2

AIR DEVICE SCHEDULE

SYMBOL	MANUFACTURER	MODEL	FRAME/BORDER	MODULE SIZE	MATERIAL	FINISH	DAMPER TYPE	NOTES
SD-1	TITUS	PAS-AA	SURFACE MOUNT	24"x24"	ALUMINUM	BAKED WHITE ENAMEL	---	1
SR-1	TITUS	272FS	SURFACE MOUNT	---	ALUMINUM	BAKED WHITE ENAMEL	OPPOSED BLADE	1
RD-1	TITUS	PAR-AA	SURFACE MOUNT	24"x24"	ALUMINUM	BAKED WHITE ENAMEL	---	1
RG-1	TITUS	50F	SURFACE MOUNT	---	ALUMINUM	BAKED WHITE ENAMEL	---	1
ER-1	TITUS	3FL	SURFACE MOUNT	---	ALUMINUM	BAKED WHITE ENAMEL	OPPOSED BLADE	1

MULTI V HR BOXES SCHEDULE

LOCATION	UNIT NUMBER	MODEL	QUANTITY	POWER VOLTS	POWER PHASE	POWER Hz	POWER RLA
96-HVAC-HP-0001	95-HVAC-HR-0001	PRHR083A	1	208	1	60	0.2
95-HVAC-HP-0001	95-HVAC-HR-0002	PRHR083A	1	208	1	60	0.2

90% SUBMITTAL - NOT FOR CONSTRUCTION

GENERAL SHEET NOTES

SEE DRAWINGS 00-H-001 FOR LEGEND, ABBREVIATIONS AND GENERAL NOTES.

SCHEDULE LEGEND:

AIR HANDLING UNIT (PACKAGED) / FURNACE SCHEDULE:

ACCESSORIES: NONE

CAPACITY NOTE: CAPACITIES LISTED IN PARENTHESES ARE IN UNITS OF "KW". CAPACITIES LISTED WITHOUT PARENTHESES ARE IN UNITS OF "BTUH".

NOTES:
1. UNIT IS SUBJECT TO CORROSION FROM A HYDROGEN SULFIDE LADEN ATMOSPHERE. ALL AIRSTREAM COMPONENTS AND EXPOSED HEAT TRANSFER COMPONENTS SHALL BE GIVEN A PROTECTIVE SPECIAL COATING OF HERESITE OR APPROVED EQUAL. CONTROLS PANELS, WIRING CONNECTIONS AND OTHER SENSITIVE ELECTRONICS SHALL HAVE A CONFORMAL COATING APPLIED.
2. VARIABLE REFRIGERANT FLOW.

CONDENSING UNIT/HEAT PUMP SCHEDULE:

ACCESSORIES: NONE

OUTDOOR COIL ENTERING AIR TEMPERATURE:
COOLING – 88° F DESIGN / 0° F MIN
HEATING – 31° F (HEAT PUMP)

NOTES:
1. UNIT IS SUBJECT TO CORROSION FROM A HYDROGEN SULFIDE LADEN ATMOSPHERE. ALL AIRSTREAM COMPONENTS AND EXPOSED HEAT TRANSFER COMPONENTS SHALL BE GIVEN A PROTECTIVE SPECIAL COATING OF HERESITE OR APPROVED EQUAL. CONTROLS PANELS, WIRING CONNECTIONS AND OTHER SENSITIVE ELECTRONICS SHALL HAVE A CONFORMAL COATING APPLIED.
2. VARIABLE REFERGINANT FLOW.

FAN COIL UNIT SCHEDULE:

ACCESSORIES: NONE

NOTES:
1. MANUFACTURER USED AS THE BASIS OF DESIGN IS L.G.
2. DUCTABLE FAN COIL UNIT TO BE SELECTED HIGH STATIC PRESSURE.

FAN SCHEDULE:

ACCESSORIES: NONE

FAN TYPE NOTES:
DF - DUCT FAN
PF - PROPELLER FAN
CF- CEILING FAN

WHEEL TYPE NOTES:
A - AXIAL
C - CENTRIFUGAL
P - PROPELLER

NOTES:
1. UNIT SURFACES SUBJECT TO CORROSION FROM A LABORATORY ATMOSPHERE SHALL BE GIVEN A PROTECTIVE COATING.
2. MANUFACTURER USED AS THE BASIS OF DESIGN IS GREENHECK.

HEATER SCHEDULE:

ACCESSORIES: NONE

TYPE NOTES:
EUHHD - HEAVY-DUTY ELECTRIC UNIT HEATER
GUH - GAS UNIT HEATER

NOTES:
1. ELECTRIC DUCT HEATER ELEMENT TYPE A) FINNED TUBE B) OPEN COIL.
2. PROVIDED WITH WALL MOUNTED THERMOSTAT.
3. MANUFACTURER USED AS THE BASIS OF DESIGN IS CHROMALOX LVH.
4. MANUFACTURER USED AS THE BASIS OF DESIGN IS STERLING GG.

PACKAGED AIR CONDITIONING UNIT/HEAT PUMP SCHEDULE:

ACCESSORIES: NONE

CAPACITY NOTE: CAPACITIES LISTED IN PARENTHESES ARE IN UNITS OF "KW". CAPACITIES LISTED WITHOUT PARENTHESES ARE IN UNITS OF "BTUH".

OUTDOOR COIL ENTERING AIR TEMPERATURE:
COOLING - 98°F DESIGN/ 0°F MIN
HEATING - 31°F DESIGN (HEAT PUMP)

NOTES:
1. UNIT IS SUBJECT TO CORROSION FROM A HYDROGEN SULFIDE LADEN ATMOSPHERE. ALL AIRSTREAM COMPONENTS AND EXPOSED HEAT TRANSFER COMPONENTS SHALL BE GIVEN A PROTECTIVE SPECIAL COATING OF HERESITE OR APPROVED EQUAL. CONTROLS PANELS, WIRING CONNECTIONS AND OTHER SENSITIVE ELECTRONICS SHALL HAVE A CONFORMAL COATING APPLIED.
2. SUPPLY AND RETURN GRILLES TO BE PROVIDED BY EQUIPMENT MANUFACTURER.

AIR DEVICE SCHEDULE:

ACCESSORIES: NONE
NOTES:
1. EQIPMENT SCHEDULE MODEL NUMBERS BASED ON TITUS.

MULTI V HR BOXES SCHEDULE:

NOTES: NONE

NO.	BY	CHK	APP	DATE	REVISIONS AND RECORD OF USE
C	RKS	LDA	RWC	3/31/2020	90% SUBMITTAL
B	RKS	LDA	RWC	7/30/2019	60% SUBMITTAL
A	RKS	LDA	RWC	3/5/2019	30% SUBMITTAL

REGISTERED PROFESSIONAL ENGINEER
RANDY W. CANTRELL
No. M36207
MECHANICAL
STATE OF CALIFORNIA

BLACK & VEATCH JOINT VENTURE

BLACK & VEATCH

FILANC

CITY OF MORRO BAY
MORRO BAY WRF
RECLAMATION FACILITY (WRF)

HVAC SCHEDULE

DESIGNED: SAM
DETAILED: RKS
CHECKED: LDA
APPROVED: RWC
DATE: 3/31/2020

0 1/2 1
IF THIS BAR DOES NOT MEASURE 1" THEN DRAWING IS NOT TO FULL SCALE

PROJECT NO. 400530

00-H-601
SHEET
OF

PLOTTED: 3|26|2020 9:24:50 AM
D400530

HVAC SEQUENCE OF OPERATIONS:

1. GENERAL SYSTEM OPERATIONS.

1.1. TEMPERATURE CONTROL PANEL(S). TEMPERATURE CONTROL PANELS (TCP) AND EQUIPMENT CONTROL PANEL(S) IDENTIFIED IN THE SEQUENCE OF OPERATION SHALL BE PROVIDED WITH THE INDICATING LIGHTS, RUNNING LIGHTS, ALARM LIGHTS, AUDIBLE ALARMS, TIMERS, AND SELECTOR SWITCHES FOR CONTROL AND STATUS INDICATION OF THE EQUIPMENT SERVED. RUNNING LIGHTS SHALL BE PROVIDED TO INDICATE BOTH ENERGIZED AND DE-ENERGIZED STATUS FOR THE EQUIPMENT AND SHALL POSITIVELY INDICATE EQUIPMENT STATUS FROM THE MOTOR STARTER OR CURRENT SENSOR. SWITCH POSITION SHALL NOT BE USED FOR LIGHT ILLUMINATION. INDICATING AND RUNNING LIGHTS SHALL BE LOCATED DIRECTLY ABOVE EACH RESPECTIVE SELECTOR SWITCH WITH LIGHT COLORS AS FOLLOWS:

RED	-	DE-ENERGIZED
GREEN	-	ENERGIZED
AMBER	-	ALARM
WHITE	-	STATUS

INDICATING LIGHTS AND SELECTOR SWITCHES SHALL BE LOCATED ON THE FACE OF THE TEMPERATURE CONTROL PANEL OR EQUIPMENT CONTROL PANEL SERVING THE RESPECTIVE EQUIPMENT. IN ADDITION TO THE LIGHTS, TIMERS, AND SELECTOR SWITCHES DESCRIBED IN THE SEQUENCE OF OPERATION FOR THE INDIVIDUAL EQUIPMENT, EACH CONTROL PANEL SHALL BE PROVIDED WITH THE FOLLOWING:

"CONTROL POWER ON"	STATUS LIGHT
"INDICATING LIGHT TEST"	PUSHBUTTON
ALARM SILENCE	PUSHBUTTON
"ALARM RESET"	PUSHBUTTON (WHERE APPLICABLE)

TEMPERATURE CONTROL PANELS AND EQUIPMENT CONTROL PANELS SPECIFIED TO BE PROVIDED WITH ALARM CONDITION INDICATING LIGHTS SHALL BE PROVIDED WITH AN ELECTRICALLY ISOLATED CONTACT TO PROVIDE REMOTE INDICATION OF THE ALARM TO THE PLANT CONTROL SYSTEM (PCS). EACH EQUIPMENT CONTROL PANEL SHALL BE PROVIDED WITH A MINIMUM OF ONE ALARM OUTPUT POINT TO THE PCS AND ADDITIONAL POINTS AS INDICATED BELOW.

TEMPERATURE AND EQUIPMENT CONTROL PANELS SHALL BE PROVIDED WITH PHENOLIC NAMEPLATES FOR EACH CONTROL SWITCH INDICATING SWITCH TYPE, EQUIPMENT CONTROLLED, ROOM OR AREA SERVED, AND SWITCH AUTOMATIC POSITION EQUIPMENT INTERLOCK.

1.2. SYSTEM INTERLOCKS AND ALARMS

ALL EQUIPMENT INTERLOCKING DEVICES AS DESCRIBED HEREIN SHALL BE PROVIDED WITHIN THE RESPECTIVE TEMPERATURE/EQUIPMENT CONTROL PANEL (TCP/ECP).

1.2.1. SMOKE DETECTION SYSTEMS

1.2.1.1. SMOKE DETECTION (AREA SMOKE DETECTION). A SMOKE DETECTED SIGNAL SHALL BE SENT FROM THE FIRE ALARM PANEL TO THE RESPECTIVE TEMPERATURE/EQUIPMENT CONTROL PANEL IN THE EVENT SMOKE IS DETECTED BY THE BUILDING SMOKE DETECTION SYSTEM. THE EQUIPMENT BELOW AND ANY INTERLOCKED EQUIPMENT SHALL BE DE-ENERGIZED AND OUTSIDE AIR DAMPERS ASSOCIATED WITH THE DE-ENERGIZED EQUIPMENT SHALL CLOSE.

EQUIPMENT
095-HVAC-FCU-0001
095-HVAC-FCU 0002
095-HVAC-FCU 0003
095-HVAC-FCU 0004
095-HVAC-FCU 0005
095-HVAC-FCU 0006
095-HVAC-FCU 0007
095-HVAC-FCU 0008
095-HVAC-FCU 0009
095-HVAC-FCU 0010
095-HVAC-FCU 0011
095-HVAC-FCU 0012
095-HVAC-FCU 0013
095-HVAC-FCU 0014
095-HVAC-AHU-0001

1.2.1.2. HIGH FILTER PRESSURE LOSS. A HIGH LIMIT PRESSURE DIFFERENTIAL FLOW SWITCH SHALL BE LOCATED ACROSS THE FILTER BANK OF THE EQUIPMENT INDICATED BELOW. IN THE EVENT THE PRESSURE DIFFERENTIAL ACROSS THE FILTER EXCEEDS THE PRESET VALUE, A "HIGH FILTER PRESSURE LOSS" ALARM LIGHT ON THE FACE OF THE RESPECTIVE TEMPERATURE/EQUIPMENT CONTROL PANEL OR THERMOSTAT (WHERE FURNISHED WITH LIGHTS) SHALL BE ILLUMINATED.

EQUIPMENT	PRESSURE SWITCH	EQUIPMENT CONTROL PANEL
50-PHP-101	----------	50-T-0001
95-AHU-101	----------	95-T-0001
96-PHP-101	----------	96-T-0001

2. HEATING SYSTEMS.

2.1. UNIT HEATERS. UNIT HEATERS SHALL BE CONTROLLED BY THEIR RESPECTIVE THERMOSTATS, LOCATED ADJACENT TO THE HEATERS ON THE DRAWINGS.

3. VENTILATING/EXHAUST SYSTEMS.

3.1.1. "ON-OFF-AUTO" EQUIPMENT CONTROL. EQUIPMENT INDICATED FOR "ON-OFF-AUTO" CONTROL SHALL EACH BE CONTROLLED BY AN INDIVIDUAL "ON-OFF-AUTO" FAN SELECTOR SWITCH. THE SWITCH LOCATION SHALL BE AS INDICATED BELOW. WHEN THE SWITCH IS PLACED IN THE "AUTO" POSITION, THE FAN SHALL BE INTERLOCKED AND CONTROLLED BY THE FAN INTERLOCK. WHEN THE SWITCH IS PLACED IN THE "ON" POSITION, THE FAN SHALL BE ENERGIZED. BEFORE A FAN CAN OPERATE, THE CONTROL DAMPER(S) SHALL BE PROVEN OPEN. WHEN THE FAN IS DE-ENERGIZED, THE CONTROL DAMPER(S) SHALL RETURN TO THE NORMALLY CLOSED POSITION UNLESS OTHERWISE INDICATED.

EQUIPMENT	SWITCH LOCATION	FAN INTERLOCK	CONTROL DAMPER(S)
EF-50-0001	50-TCP-0001	50-T-0001	50-CD-0001, 0002,0003,0004
EF-50-0002	50-TCP-0001	50-T-0001	50- CD-0001, 0002,0003,0004
DF-95-0001	95-TCP-0001	95-T-0001	95-CD-0002

3.1.2. "ON-OFF" EQUIPMENT CONTROL. EQUIPMENT INDICATED FOR "ON-OFF" CONTROL SHALL EACH BE CONTROLLED BY AN INDIVIDUAL "ON-OFF" FAN SELECTOR SWITCH. THE SWITCH LOCATION SHALL BE AS INDICATED BELOW. WHEN THE SWITCH IS PLACED IN THE "ON" POSITION, THE RESPECTIVE EQUIPMENT FAN SHALL BE EERGIZED. BEFORE THE FAN CAN OPERATE, THE CONTROL DAMPER'S WHEN THE SWITCH IS PLACED IN THE "ON" POSITION, THE FAN SHALL BE ENERGIZED. BEFORE A FAN CAN OPERATE, THE CONTROL DAMPER(S) SHALL BE PROVEN OPEN. WHEN THE FAN IS DE-ENERGIZED, THE CONTROL DAMPER(S) SHALL RETURN TO THE NORMALLY CLOSED POSITION UNLESS OTHERWISE INDICATED.

EQUIPMENT	SWITCH LOCATION	CONTROL DAMPER(S)
EF-96-0001	MCC	CD-0002,0003,0004,0005,0007,0008
EF-96-0002	MCC	CD-0002,0003,0004,0005,0007,0008
DF-96-0001	MCC	CD-0002,0003,0004,0005,0007,0008
DF-96-0003	MCC	CD-0001.

4. AIR CONDITIONING SYSTEMS.

4.1. PACKAGED SYSTEMS. PACKAGED SYSTEMS SHALL BE CONTROLLED BY THEIR RESPECTIVE THERMOSTAT. HEAT PUMPS SHALL HAVE AN “HEAT-OFF-COOL” (PROGRAMMABLE) SYSTEM SWITCH. HEAT PUMPS SHALL ALSO HAVE AN “EMERGENCY HEAT” SYSTEM SWITCH POSITION TO ENERGIZE THE HEATING AND DE-ENERGIZE THE COMPRESSORS. AN “AUTO-ON” FAN SWITCH SHALL BE LOCATED ON THE THERMOSTAT SUB-BASE.

EQUIPMENT	THERMOSTAT
50-PHP-0001	50-T-0001
96-PHP-0001	96-T-0001
80-WPHP-0001,0002,0003,0004	80-T-0001

4.1.1. MIXED AIR/ECONOMIZER. THE SYSTEM SHALL BE IN THE ECONOMIZER MODE WHEN THE SYSTEM IS IN THE OCCUPIED MODE, COOLING IS REQUIRED, AND THE OUTSIDE AIR IS SUITABLE FOR COOLING. OUTSIDE AIR IS SUITABLE FOR COOLING WHEN THE OUTSIDE AIR TEMPERATURE IS BELOW THE CHANGEOVER TEMPERATURE ON SYSTEMS EQUIPPED WITH DRY BULB TEMPERATURE CONTROL, OR BELOW THE CHANGEOVER ENTHALPY ON SYSTEMS EQUIPPED WITH ENTHALPY CONTROL, OR WHEN THE OUTSIDE AIR ENTHALPY IS LESS THAN THE RETURN AIR ENTHALPY ON SYSTEMS EQUIPPED WITH DIFFERENTIAL ENTHALPY CONTROL. IN THIS MODE, THE OUTSIDE AIR CONTROLS SHALL MODULATE THE OUTSIDE AIR, RETURN AIR, AND RELIEF AIR DAMPERS TO SATISFY THE MIXED AIR THERMOSTAT/SENSOR SETPOINT. THE COOLING CONTROLS SHALL BE LOCKED OUT. THE HEATING CONTROLS SHALL BE LOCKED OUT EXCEPT FOR ZONE CONTROLS ASSOCIATED WITH VARIABLE VOLUME SYSTEMS.

EQUIPMENT	SWITCH LOCATION	THERMOSTAT
50-PHP-0001	------	50-T-0001
96-PHP-0001	------	96-T-0001

4.1.2. CANOPY HOOD EXHAUST FANS SHALL BE CONTROLLED BY AN ON-OFF SWITCH.WHEN THE FAN SWITICH IS PLACED IN THE ON POSITION, THE FAN SHALL BE ENEGIZED.WHEN THE FAN SWITCH IS PLACED IN OFF POSTION, THE FAN SHALL BE DEENERGIZED.

4.2. VARIABLE REFGERIANT FLOW (VRF) SYSTEMS. THE VRF SYSTEM FOR THE BUILDING WILL BE CONTROLLED BY THE MANUFACTURER’S DIGITAL VRF CONTROLLER INTERFACE. ALL VRF EQUIPMENT AND THERMOSTATS WILL CONNECT TO AND COMMUNICATE WITH THE VRF CONTROLLER. FAN COIL UNITS (FCU) SHALL EACH BE CONTROLLED BY A ROOM THERMOSTAT/CONTROLLER.THE THERMOSTAT CONTROLLER SHALL ENERGIZE THE UNIT TO PROVIDE HEATING OR COOLING AND COMMUNICATE DEMAND TO THE VRF CONTROLLER.

OPERATION OF THE SYSTEM SHALL PERMIT EITHER INDIVIDUAL COOLING OR HEATING OF EACH INDOOR UNIT SIMULTANEOUSLY. ALL INDOOR UNITS SHALL BE CAPABLE OF BEING IN HEATING MODE SIMULTANEOUSLY. ALL INDOOR UNITS SHALL BE CAPABLE OF BEING IN COOLING MODE SIMULTANEOUSLY.

OUTDOOR CONDENSING UNITS SHALL BE ENERGIZED AS REQUIRED BY THE VRF SYSTEM TO MAINTAIN SPACE TEMPRATURE SETPOINTS. BRANCH SELLECTORS SHALL DIVERT THE FLOW OF REFRIGERANT AS REQUIRED BY THE VRF SYSTEM TO MAINTAIN SPACE TEMPRATURE SET POINTS.

EQUIPMENT	THERMOSTAT
095-HVAC-FCU-0001	095-HVAC-T- 0001
095-HVAC-FCU 0002	095-HVAC-T- 0002
095-HVAC-FCU 0003	095-HVAC-T- 0003
095-HVAC-FCU 0004	095-HVAC-T- 0004
095-HVAC-FCU 0005	095-HVAC-T- 0005
095-HVAC-FCU 0006	095-HVAC-T- 0006
095-HVAC-FCU 0007	095-HVAC-T- 0007
095-HVAC-FCU 0008	095-HVAC-T- 0008
095-HVAC-FCU 0009	095-HVAC-T- 0009
095-HVAC-FCU 0010	095-HVAC-T- 0010
095-HVAC-FCU 0011	095-HVAC-T- 0011
095-HVAC-FCU 0012	095-HVAC-T- 0012
095-HVAC-FCU 0013	095-HVAC-T- 0013
095-HVAC-FCU 0014	095-HVAC-T- 0014

4.2.1. OCCUPANCY MODE DETERMINATION

FOR ROOMS SPECIFIED TO HAVE OCCUPANCY CONTROL BASED ON DATE AND TIME, AN OWNER PROVIDED, TIME-OF-DAY SCHEDULE (ADJUSTABLE THROUGH THE BUILDING AUTOMATION SYSTEM (BAS) GRAPHICAL USER INTERFACE) SHALL BE USED TO SET THE OCCUPANCY MODE (OCCUPIED OR UNOCCUPIED) OF THE RESPECTIVE INDOOR UNIT(S) (IDU). THE ABILITY TO CREATE SPECIAL EVENTS AND HOLIDAYS SHALL BE AVAILABLE THROUGH THE VRF CONTROLLER GRAPHICAL USER INTERFACE.

FOR ROOMS SPECIFIED TO HAVE OCCUPANCY CONTROL BASED ON AN OCCUPANCY SENSOR OF A REMOTE CONTROLLER OR SOME OTHER FORM OF REMOTE OCCUPANCY DETERMINATION, A REMOTE CONTROLLER OCCUPANCY SENSOR OR A HARDWIRED INPUT SHALL BE USED TO SET THE OCCUPANCY MODE (OCCUPIED OR UNOCCUPIED) OF THE RESPECTIVE FCU(S).

WHEN THE FCU IS IN THE UNOCCUPIED MODE, AN OVERRIDE AT THE REMOTE CONTROLLER SHALL PLACE THE FCU INTO THE OCCUPIED MODE FOR A CERTAIN AMOUNT OF TIME (ADJUSTABLE THROUGH THE REMOTE CONTROLLER SETTINGS) AND TAKE PRIORITY OVER ALL OTHER OCCUPANCY MODE COMMANDS. THE STATUS OF OVERRIDE(M) SHALL BE TRACKED BY THE VRF CONTROLLER AND TOTALIZED PER FCU TO GENERATE AN AFTER-HOURS USAGE REPORT.

4.2.2. OCCUPIED MODE OF OPERATION

THE VRF CONTROLLER SHALL COMMAND THE FCU OPERATION TO ON. THE VRF CONTROLLER SHALL MANAGE THE ABILITY OF THE REMOTE CONTROLLER TO ADJUST THE FCU OPERATION COMMAND PER THE OWNER’S SPECIFICATIONS.

THE VRF CONTROLLER SHALL COMMAND THE FCU MODE TO AUTO. PER ITS INTERNAL CONTROLS, THE FCU SHALL DETERMINE WHETHER TO BE IN AUTOHEAT OR AUTOCOOL BASED ON ROOM TEMPERATURE AND TEMPERATURE SET POINTS. THE VRF CONTROLLER SHALL MANAGE THE ABILITY OF THE REMOTE CONTROLLER TO ADJUST THE FCU MODE COMMAND PER THE OWNER’S SPECIFICATIONS. IF THE FCU MODE IS COMMANDED TO HEAT OR COOL AT THE REMOTE CONTROLLER, IT SHALL OPERATE ON ITS INTERNAL CONTROLS TO MAINTAIN ROOM TEMPERATURE AT EITHER THE OCCUPIED HEATING TEMPERATURE SET POINT OR OCCUPIED COOLING TEMPERATURE SET POINT.

THE VRF CONTROLLER SHALL SET THE FCU OCCUPIED HEATING TEMPERATURE SET POINT TO 65 °F AND THE OCCUPIED COOLING TEMPERATURE SET POINT TO 75 ° F (ADJUSTABLE THROUGH THE VRF CONTROLLER GRAPHICAL USER INTERFACE). THE VRF CONTROLLER SHALL MANAGE THE ABILITY OF THE REMOTE CONTROLLER TO ADJUST THE OCCUPIED HEATING TEMPERATURE SET POINT AND OCCUPIED COOLING TEMPERATURE SET POINT WITHIN THE UPPER/LOWER HEATING/COOLING TEMPERATURE SET POINT RANGE LIMITS (ADJUSTABLE THROUGH THE VRF CONTROLLER GRAPHICAL USER INTERFACE)

THE VRF CONTROLLER SHALL MANAGE THE ABILITY OF THE REMOTE CONTROLLER TO PERMIT/PROHIBIT SET POINT ADJUSTMENTS PER THE OWNER’S SPECIFICATIONS.

PER ITS INTERNAL CONTROLS, FCU SHALL MAINTAIN ROOM TEMPERATURE BETWEEN THE OCCUPIED HEATING TEMPERATURE SET POINT AND OCCUPIED COOLING TEMPERATURE SET POINT.

4.2.3. UNOCCUPIED MODE OF OPERATION

THE VRF CONTROLLER SHALL COMMAND THE FCU OPERATION TO ON. PER ITS INTERNAL CONTROLS, THE ABILITY OF THE REMOTE CONTROLLER TO ADJUST THE FCU OPERATION COMMAND SHALL BE PROHIBITED.

THE VRF CONTROLLER SHALL COMMAND THE FCU MODE TO AUTO. PER ITS INTERNAL CONTROLS, THE FCU SHALL DETERMINE WHETHER TO BE IN AUTOHEAT OR AUTOCOOL BASED ON ROOM TEMPERATURE AND UNOCCUPIED TEMPERATURE SET POINTS. PER ITS INTERNAL CONTROLS, THE ABILITY OF THE REMOTE CONTROLLER TO ADJUST THE IDU MODE COMMAND SHALL BE PROHIBITED.

THE VRF CONTROLLER SHALL SET THE FCU UNOCCUPIED HEATING TEMPERATURE SET POINT TO 60 °F AND THE UNOCCUPIED COOLING TEMPERATURE SET POINT TO 80 °F (ADJUSTABLE THROUGH THE VRF CONTROLLER GRAPHICAL USER INTERFACE). PER ITS INTERNAL CONTROLS, THE ABILITY OF THE REMOTE CONTROLLER TO ADJUST THE IDU UNOCCUPIED TEMPERATURE SET POINTS SHALL BE PROHIBITED.

PER ITS INTERNAL CONTROLS, THE FCU SHALL MAINTAIN ROOM TEMPERATURE BETWEEN THE UNOCCUPIED HEATING TEMPERATURE SET POINT AND UNOCCUPIED COOLING TEMPERATURE SET POINT.

4.2.4. ERRORS AND ALARMS

IN THE EVENT OF AN EQUIPMENT ERROR, AN ALARM POINT SHALL BE TOGGLED TO ACTIVE AND AN EQUIPMENT ERROR CODE SHALL BE GENERATED. THE FOLLOWING ALARM POINTS GENERATED BY THE EQUIPMENT SHALL HAVE ALARM EXTENSIONS AND GENERATE AND ROUTE ALARMS PER THE OWNERS REQUIREMENTS:

1. ERROR CODE (M). THIS SHALL BE ROUTED THROUGH AN ENUMERATED BLOCK THAT TRANSLATES THE CODE INTO AN ENGLISH ALARM DESCRIPTION.
2. FILTER SIGN (M)
3. UNIT IN ALARM (M)

4.3. 100% OUTDOOR AIR HANDLING UNIT. OPERATE AS A SYSTEM TO PROVIDE TEMPERED 100% OUTSIDE AIR TO THE OPERATION BUILDING AREAS. AIR HANDLING UNIT AND ITS ASSOCIATED HEAT PUMP UNIT PAH-95-0001/HP-95-0001 SHALL BE CONTROLLED BY ITS RESPECTIVE THERMOSTAT LOCATED IN THE DISCHARGE AIR DUCT. SYSTEM OPERATION SHALL BE CONTROLLED BY AN “OFF-HEAT-AUTO-COOL” (AUTOMATIC CHANGEOVER, PROGRAMMABLE) SYSTEM SWITCH AND AN “AUTO-ON” FAN SWITCH LOCATED ON THE SWITCH LOCATED ON THE FACE TEMPRATURE CONTROL PANEL 95-TCP-001. HEAT PUMPS SHALL ALSO HAVE AN “EMERGENCY HEAT” SYSTEM SWITCH POSITION TO ENERGIZE THE HEATING AND DE-ENERGIZE THE COMPRESSORS. WHEN THE SYSTEM SWITCH IS PLACED IN THE “AUTO” POSITION, THE SYSTEM WILL OPERATE TO MAINTAIN THE LEAVING AIR TEMPERATURE SETPOINT AS SENSED BY THE THERMOSTAT. WHEN THE SYSTEM SWITCH IS PLACED IN THE “COOL” POSITIION, COOLING WILL BE ENABLED AND HEATING LOCKED OUT, WHEN PLACES IN THE “HEAT” POSITION, HEATING IS ENABLED AND COOLING IS LOCKED OUT. WHEN THE FAN SWITCH IS PLACED IN THE “AUTO” POSITION, THE RESPECTIVE EQUIPMENT FAN SHALL BE ENERGIZED WHEN THE VRF SYSTEM IS IN OCCUPIED MODE, AND IT SHALL BE DE-ENERGIZED WHEN THE VRF SYSTEM IS IN THE UNOCCUPIED MODE.. WHEN THE FAN SWITCH IS PLACED IN THE “ON” POSITION, THE FAN SHALL BE ENERGIZED. BEFORE THE FAN CAN OPERATE, THE CONTROL DAMPER(S) SHALL BE PROVEN OPEN. WHEN THE FAN IS DE-ENERGIZED, THE CONTROL DAMPER(S) SHALL CLOSE.

EQUIPMENT	THERMOSTAT	CONTROL DAMPER(S)	CONTROL PANEL
95-AHU-0001	T-0014	95-CD-0008	95-TCP-0001

4.4. DUCTLESS SPLIT SYSTEMS. DUCTLESS SPLIT SYSTEMS SHALL BE CONTROLLED BY ROOM THERMOSTATS PROVIDED WITH THE UNITS WITH AUOMATIC SWITCHOVER BETWEEN HEATING AND COOLING.THE UNITS SHALL BE MATCHED AS FOLLOWS:

EQUIPMENT	SWITCH LOCATION	THERMOSTAT
95-FCU-0013	----------	95-T-0013
95-FCU-0014	----------	95-T-0013

5. THERMOSTAT SETPOINTS

5.1. THERMOSTAT SETPOINTS SHALL BE AS INDICATED BELOW, UNLESS THE SETPOINT HAS BEEN DESCRIBED PREVIOUSLY IN THIS SEQUENCE OF OPERATIONS.

HEATERS	- 54 F
VENTILATING EQUIPMENT	- 90 F
AIR CONDITIONED AREAS	- 75 F

90% SUBMITTAL- NOT FOR CONSTRUCTION

NO.	BY	CHK	APP	DATE	REVISIONS AND RECORD OF USE
C	RKS	LDA	RWC	3/31/2020	90% SUBMITTAL
B	RKS	LDA	RWC	7/30/2019	60% SUBMITTAL
A	RKS	LDA	RWC	3/5/2019	30% SUBMITTAL

REGISTERED PROFESSIONAL ENGINEER
RANDY W. CANTRELL
No. M36207
MECHANICAL
STATE OF CALIFORNIA

BLACK & VEATCH
JOINT VENTURE
BLACK & VEATCH
FILANC

CITY OF MORRO BAY
MORRO BAY WRF
RECLAMATION FACILITY (WRF)

HVAC
HVAC SEQUENCE OF OPERATIONS

DESIGNED: SAM
DETAILED: RKS
CHECKED: LDA
APPROVED: RWC
DATE: 3/31/2020

0 1/2 1
IF THIS BAR DOES NOT MEASURE 1" THEN DRAWING IS NOT TO FULL SCALE

PROJECT NO.
400530

00-H-602
SHEET
OF

PLOTTED: 3/26/2020 9:24:51 AM
D400530

STATE OF CALIFORNIA
HVAC DRY & WET SYSTEM REQUIREMENTS
CEC-NRCC-MCH-02-E (Revised 01/16) — CALIFORNIA ENERGY COMMISSION

CERTIFICATE OF COMPLIANCE	NRCC-MCH-02-E
HVAC Dry System Requirements	(Page 1 of 3)
Project Name: CITY OF MORRO BAY WRF RECLAMATION FACILITY (WRF)	Date Prepared: 31/12/2019

A. Equipment Tags and System Description[1]- Dry Systems		HP-0002/AHU-0001	HP-FCU-0001 TO 0012	HP-FCU-0013, 0014
MANDATORY MEASURES	*T-24 Sections*	*Reference to the Requirements in the Contract Documents[2]*		
Heating Equipment Efficiency[3]	110.1 or 110.2(a)	N/A	N/A	N/A
Cooling Equipment Efficiency[3]	110.1 or 110.2(a)	00-H-601	00-H-601	00-H-601
HVAC or Heat Pump Thermostats	110.2(b), 110.2(c)	N/A	N/A	N/A
Furnace Standby Loss Control	110.2(d)	N/A	N/A	N/A
Low Leakage AHUs	110.2(f)	N/A	N/A	N/A
Ventilation[4]	120.1(b)	N/A	0.27 CFM/SF	100 CFM
Demand Control Ventilation[5]	120.1(c)4	N/A	N/A	N/A
Occupant Sensor Ventilation Control[6]	120.1(c)5, 120.2(e)3	N/A	N/A	N/A
Shutoff and Reset Controls[7]	120.2(e)	00-H-601	00-H-601	00-H-601
Outdoor Air and Exhaust Damper Control	120.2(f)	N/A	N/A	N/A
Isolation Zones	120.2(g)	N/A	N/A	N/A
Automatic Demand Shed Controls	120.2(h)	N/A	N/A	N/A
Economizer FDD	120.2(i)	N/A	N/A	N/A
Duct Insulation	120.4	23 30 13 -3-3.06	23 30 13 -3-3.06	23 30 13 -3-3.06
PRESCRIPTIVE MEASURES				
Equipment is sized in conformance with 140.4 (a & b)	140.4(a & b)	◉ Yes ○ No	◉ Yes ○ No	◉ Yes ○ No
Supply Fan Pressure Control	140.4(c)	N/A	N/A	N/A
Simultaneous Heat/Cool[8]	140.4(d)	N/A	N/A	N/A
Economizer	140.4(e)	YES	YES	YES
Heat and Cool Air Supply Reset	140.4(f)	N/A	N/A	N/A
Electric Resistance Heating[9]	140.4(g)	N/A	N/A	N/A
Duct Leakage Sealing and Testing.[10]	140.4(l)	N/A	N/A	N/A

Notes:
1. *Provide equipment tags (e.g. AHU 1 to 10) and system description (e.g. Single Duct VAV reheat) as appropriate. Multiple units with common requirements can be grouped together.*
2. *Provide references to plans (i.e. Drawing Sheet Numbers) and/or specifications (including Section name/number and relevant paragraphs) where each requirement is specified. Enter "N/A" if the requirement is not applicable to this system.*
3. *The referenced plans and specifications must include all of the following information: equipment tag, equipment nominal capacity, Title 24 minimum efficiency requirements, and actual rated equipment efficiencies. Where multiple efficiency requirements are applicable (e.g. full- and part-load) include all. Where appliance standards apply (110.1), identify where equipment is required to be listed per Title 20 1601 et seq.*
4. *Identify where the ventilation requirements are documented for each central HVAC system. Include references to both central unit schedules and sequences of operation. If one or more spaces is naturally ventilated identify where this is documented in the plans and specifications. Multiple zone central air systems must also provide a MCH-03-E compliance document.*
5. *If one or more spaces has demand controlled ventilation identify where it is specified including the sensor specifications and the sequence of operation.*
6. *If one or more space has occupant sensor ventilation control identify where it is specified including the sensor specifications and the sequence of operation*
7. *If the system is DDC identify the sequences for the system start/stop, setback (if required) and setup (if required). For all systems identify the specification for the thermostats and time clocks (if applicable).*
8. *Identify where the heating, cooling and deadband airflows are scheduled for this system. Include a reference to the specification of the zone controls. Provide a MCH-03-E compliance document.*
9. *Enter N/A if there is no electric heating. If the system has electric heating indicate which exception to 140.4(g) applies.*
10. *If duct leakage sealing and testing is required, a MCH-04-A compliance document must be submitted.*

STATE OF CALIFORNIA
HVAC DRY & WET SYSTEM REQUIREMENTS
CEC-NRCC-MCH-02-E (Revised 01/16) — CALIFORNIA ENERGY COMMISSION

CERTIFICATE OF COMPLIANCE	NRCC-MCH-02-E
HVAC Dry & Wet System Requirements	(Page 2 of 3)
Project Name: CITY OF MORRO BAY WRF RECLAMATION FACILITY (WRF)	Date Prepared: 31/12/2019

B. Equipment Tags and System Description[1]- Wet Systems		N/A	N/A	N/A
MANDATORY MEASURES	*T-24 Sections*	*Reference to the Requirements in the Contract Documents[2]*		
Heating Hot Water Equipment Efficiency[3]	110.1			
Cooling Chilled and Condenser Water Equipment Efficiency[3]	110.1, 140.4(i)			
Open and Closed Circuit Cooling Towers conductivity or flow-based controls	110.2(e) 1			
Open and Closed Circuit Cooling Towers Maximum Achievable Cycles of Concentration (LSI)[4]	110.2(e) 2			
Open and Closed Circuit Cooling Towers Flow Meter with analog output	110.2(e) 3			
Open and Closed Circuit Cooling Towers Overflow Alarm	110.2(e) 4			
Open and Closed Circuit Cooling Towers Efficient Drift Eliminators	110.2(e) 5			
Pipe Insulation	120.3			
PRESCRIPTIVE MEASURES				
Cooling Tower Fan Controls	140.4(h)2, 140.4(h)5	○ Yes ○ No	○ Yes ○ No	○ Yes ○ No
Cooling Tower Flow Controls	140.4(h)3			
Centrifugal Fan Cooling Towers[4]	140.4(h)4			
Air-Cooled Chiller Limitation[5]	140.4(j)			
Variable Flow System Design	140.4(k)			
Chiller and Boiler Isolation	140.4(k)			
CHW and HHW Reset Controls	140.4(k)			
WLHP Isolation Valves	140.4(k)			
VSD on CHW, CW & WLHP Pumps >5HP	140.4(k)			
DP Sensor Location	140.4(k)			

Notes:
1. *Provide equipment tags (e.g. CH 1 to 3) or system description (e.g. CHW loop) as appropriate. Multiple units with common requirements can be grouped together.*
2. *Provide references to plans (i.e. Drawing Sheet Numbers) and/or specifications (including Section name/number and relevant paragraphs) where each requirement is specified. Enter "N/A" if the requirement is not applicable to this system.*
3. *The referenced plans and specifications must include all of the following information: equipment tag, equipment nominal capacity, Title 24 minimum efficiency requirements, and actual rated equipment efficiencies. Where multiple efficiency requirements are applicable (e.g. full- and part-load) include all. For chillers operating at non-standard efficiencies provide the Kadj values. For chillers also note whether the efficiencies are Path A or Path B.*
4. *Identify if cooling towers have propeller fans. If towers use centrifugal fans document which exception is used.*
5. *If air-cooled chillers are used, document which exceptions have been used to comply with 140.4(j) and the total installed design capacity of the air-cooled chillers in the chilled water plant.*
6. *Identify the existence of a completed MCH-06-E when open or closed circuit cooling towers are specified to be installed, otherwise enter "N/A".*

STATE OF CALIFORNIA
HVAC SYSTEM REQUIREMENTS
CEC-NRCC-MCH-02-E (Revised 01/16) — CALIFORNIA ENERGY COMMISSION

CERTIFICATE OF COMPLIANCE	NRCC-MCH-02-E
HVAC Wet System Requirements	(Page 3 of 3)
Project Name: CITY OF MORRO BAY WRF RECLAMATION FACILITY (WRF)	Date Prepared: 31/12/2019

DOCUMENTATION AUTHOR'S DECLARATION STATEMENT

1. I certify that this Certificate of Compliance documentation is accurate and complete.

Documentation Author Name: Randy W Cantrell	Documentation Author Signature:
Company: Black & Veatch	Signature Date:
Address: 8400 Ward Parkway	CEA/ HERS Certification Identification (if applicable):
City/State/Zip: Kansas City / MO / 64114	Phone: (913) 458 - 2000

RESPONSIBLE PERSON'S DECLARATION STATEMENT

I certify the following under penalty of perjury, under the laws of the State of California:
1. The information provided on this Certificate of Compliance is true and correct.
2. I am eligible under Division 3 of the Business and Professions Code to accept responsibility for the building design or system design identified on this Certificate of Compliance (responsible designer).
3. The energy features and performance specifications, materials, components, and manufactured devices for the building design or system design identified on this Certificate of Compliance conform to the requirements of Title 24, Part 1 and Part 6 of the California Code of Regulations.
4. The building design features or system design features identified on this Certificate of Compliance are consistent with the information provided on other applicable compliance documents, worksheets, calculations, plans and specifications submitted to the enforcement agency for approval with this building permit application.
5. I will ensure that a completed signed copy of this Certificate of Compliance shall be made available with the building permit(s) issued for the building, and made available to the enforcement agency for all applicable inspections. I understand that a completed signed copy of this Certificate of Compliance is required to be included with the documentation the builder provides to the building owner at occupancy.

Responsible Designer Name: Randy W Cantrell	Responsible Designer Signature:
Company: Black & Veatch	Date Signed:
Address: 8400 Ward Parkway	License: M36207
City/State/Zip: Kansas City, MO 64114	Phone: 913-458-3172

NO.	BY	CHK	APP	DATE	REVISIONS AND RECORD OF USE
C	RKS	LDA	RWC	3/31/2020	90% SUBMITTAL
B	RKS	LDA	RWC	7/30/2019	60% SUBMITTAL
A	RKS	LDA	RWC	3/5/2019	30% SUBMITTAL

REGISTERED PROFESSIONAL ENGINEER — RANDY W. CANTRELL — No. M36207 — MECHANICAL — STATE OF CALIFORNIA

BLACK & VEATCH JOINT VENTURE — BLACK & VEATCH — FILANC

CITY OF MORRO BAY
MORRO BAY WRF
RECLAMATION FACILITY (WRF)

HVAC
TITLE 24 - COMPLIANCE FORM

DESIGNED: SAM
DETAILED: RKS
CHECKED: LDA
APPROVED: RWC
DATE: 3/31/2020

0 1/2 1
IF THIS BAR DOES NOT MEASURE 1" THEN DRAWING IS NOT TO FULL SCALE

PROJECT NO. 400530

00-H-603
SHEET OF

90% SUBMITTAL- NOT FOR CONSTRUCTION

PLOTTED: 3/26/2020 9:24:51 AM
D400530

STATE OF CALIFORNIA
HVAC DRY & WET SYSTEM REQUIREMENTS
CEC-NRCC-MCH-02-E (Revised 01/16) — CALIFORNIA ENERGY COMMISSION

CERTIFICATE OF COMPLIANCE	NRCC-MCH-02-E
HVAC Dry System Requirements	(Page 1 of 3)
Project Name: CITY OF MORRO BAY WRF RECLAMATION FACILITY (WRF)	Date Prepared: 31/12/2019

A. Equipment Tags and System Description[1]- Dry Systems		50-HVAC-PHP-0001	96-HVAC-PHP-0001	80-HVAC-WPHP-0001
MANDATORY MEASURES	*T-24 Sections*	*Reference to the Requirements in the Contract Documents[2]*		
Heating Equipment Efficiency[3]	110.1 or 110.2(a)	N/A	N/A	N/A
Cooling Equipment Efficiency[3]	110.1 or 110.2(a)	00-H-601	00-H-601	00-H-601
HVAC or Heat Pump Thermostats	110.2(b), 110.2(c)	N/A	N/A	N/A
Furnace Standby Loss Control	110.2(d)	N/A	N/A	N/A
Low Leakage AHUs	110.2(f)	N/A	N/A	N/A
Ventilation[4]	120.1(b)	0.17 CFM/SF	0.51 CFM/SF	N/A
Demand Control Ventilation[5]	120.1(c)4	N/A	N/A	N/A
Occupant Sensor Ventilation Control[6]	120.1(c)5, 120.2(e)3	N/A	N/A	N/A
Shutoff and Reset Controls[7]	120.2(e)	00-H-601	00-H-601	00-H-601
Outdoor Air and Exhaust Damper Control	120.2(f)	N/A	N/A	N/A
Isolation Zones	120.2(g)	N/A	N/A	N/A
Automatic Demand Shed Controls	120.2(h)	N/A	N/A	N/A
Economizer FDD	120.2(i)	N/A	N/A	N/A
Duct Insulation	120.4	23 30 13 -3-3.06	23 30 13 -3-3.06	23 30 13 -3-3.06
PRESCRIPTIVE MEASURES				
Equipment is sized in conformance with 140.4 (a & b)	140.4(a & b)	(•) Yes ( ) No	(•) Yes ( ) No	(•) Yes ( ) No
Supply Fan Pressure Control	140.4(c)	N/A	N/A	N/A
Simultaneous Heat/Cool[8]	140.4(d)	N/A	N/A	N/A
Economizer	140.4(e)	YES	YES	YES
Heat and Cool Air Supply Reset	140.4(f)	N/A	N/A	N/A
Electric Resistance Heating[9]	140.4(g)	N/A	N/A	N/A
Duct Leakage Sealing and Testing.[10]	140.4(l)	N/A	N/A	N/A

Notes:
1. *Provide equipment tags (e.g. AHU 1 to 10) and system description (e.g. Single Duct VAV reheat) as appropriate. Multiple units with common requirements can be grouped together.*
2. *Provide references to plans (i.e. Drawing Sheet Numbers) and/or specifications (including Section name/number and relevant paragraphs) where each requirement is specified. Enter "N/A" if the requirement is not applicable to this system.*
3. *The referenced plans and specifications must include all of the following information: equipment tag, equipment nominal capacity, Title 24 minimum efficiency requirements, and actual rated equipment efficiencies. Where multiple efficiency requirements are applicable (e.g. full- and part-load) include all. Where appliance standards apply (110.1), identify where equipment is required to be listed per Title 20 1601 et seq.*
4. *Identify where the ventilation requirements are documented for each central HVAC system. Include references to both central unit schedules and sequences of operation. If one or more spaces is naturally ventilated identify where this is documented in the plans and specifications. Multiple zone central air systems must also provide a MCH-03-E compliance document.*
5. *If one or more spaces has demand controlled ventilation identify where it is specified including the sensor specifications and the sequence of operation.*
6. *If one or more space has occupant sensor ventilation control identify where it is specified including the sensor specifications and the sequence of operation*
7. *If the system is DDC identify the sequences for the system start/stop, setback (if required) and setup (if required). For all systems identify the specification for the thermostats and time clocks (if applicable).*
8. *Identify where the heating, cooling and deadband airflows are scheduled for this system. Include a reference to the specification of the zone controls. Provide a MCH-03-E compliance document.*
9. *Enter N/A if there is no electric heating. If the system has electric heating indicate which exception to 140.4(g) applies.*
10. *If duct leakage sealing and testing is required, a MCH-04-A compliance document must be submitted.*

STATE OF CALIFORNIA
HVAC DRY & WET SYSTEM REQUIREMENTS
CEC-NRCC-MCH-02-E (Revised 01/16) — CALIFORNIA ENERGY COMMISSION

CERTIFICATE OF COMPLIANCE	NRCC-MCH-02-E
HVAC Dry & Wet System Requirements	(Page 2 of 3)
Project Name: CITY OF MORRO BAY WRF RECLAMATION FACILITY (WRF)	Date Prepared: 31/12/2019

B. Equipment Tags and System Description[1]- Wet Systems		N/A	N/A	N/A
MANDATORY MEASURES	*T-24 Sections*	*Reference to the Requirements in the Contract Documents[2]*		
Heating Hot Water Equipment Efficiency[3]	110.1			
Cooling Chilled and Condenser Water Equipment Efficiency[3]	110.1, 140.4(i)			
Open and Closed Circuit Cooling Towers conductivity or flow-based controls	110.2(e) 1			
Open and Closed Circuit Cooling Towers Maximum Achievable Cycles of Concentration (LSI)[6]	110.2(e) 2			
Open and Closed Circuit Cooling Towers Flow Meter with analog output	110.2(e) 3			
Open and Closed Circuit Cooling Towers Overflow Alarm	110.2(e) 4			
Open and Closed Circuit Cooling Towers Efficient Drift Eliminators	110.2(e) 5			
Pipe Insulation	120.3			
PRESCRIPTIVE MEASURES				
Cooling Tower Fan Controls	140.4(h)2, 140.4(h)5	( ) Yes ( ) No	( ) Yes ( ) No	( ) Yes ( ) No
Cooling Tower Flow Controls	140.4(h)3			
Centrifugal Fan Cooling Towers[4]	140.4(h)4			
Air-Cooled Chiller Limitation[5]	140.4(j)			
Variable Flow System Design	140.4(k)			
Chiller and Boiler Isolation	140.4(k)			
CHW and HHW Reset Controls	140.4(k)			
WLHP Isolation Valves	140.4(k)			
VSD on CHW, CW & WLHP Pumps >5HP	140.4(k)			
DP Sensor Location	140.4(k)			

Notes:
1. *Provide equipment tags (e.g. CH 1 to 3) or system description (e.g. CHW loop) as appropriate. Multiple units with common requirements can be grouped together.*
2. *Provide references to plans (i.e. Drawing Sheet Numbers) and/or specifications (including Section name/number and relevant paragraphs) where each requirement is specified. Enter "N/A" if the requirement is not applicable to this system.*
3. *The referenced plans and specifications must include all of the following information: equipment tag, equipment nominal capacity, Title 24 minimum efficiency requirements, and actual rated equipment efficiencies. Where multiple efficiency requirements are applicable (e.g. full- and part-load) include all. For chillers operating at non-standard efficiencies provide the Kadj values. For chillers also note whether the efficiencies are Path A or Path B.*
4. *Identify if cooling towers have propeller fans. If towers use centrifugal fans document which exception is used.*
5. *If air-cooled chillers are used, document which exceptions have been used to comply with 140.4(j) and the total installed design capacity of the air-cooled chillers in the chilled water plant.*
6. *Identify the existence of a completed MCH-06-E when open or closed circuit cooling towers are specified to be installed, otherwise enter "N/A".*

STATE OF CALIFORNIA
HVAC SYSTEM REQUIREMENTS
CEC-NRCC-MCH-02-E (Revised 01/16) — CALIFORNIA ENERGY COMMISSION

CERTIFICATE OF COMPLIANCE	NRCC-MCH-02-E
HVAC Wet System Requirements	(Page 3 of 3)
Project Name: CITY OF MORRO BAY WRF RECLAMATION FACILITY (WRF)	Date Prepared: 31/12/2019

DOCUMENTATION AUTHOR'S DECLARATION STATEMENT

1. I certify that this Certificate of Compliance documentation is accurate and complete.

Documentation Author Name: Randy W Cantrell	Documentation Author Signature:
Company: Black & Veatch	Signature Date:
Address: 8400 Ward Parkway	CEA/ HERS Certification Identification (if applicable):
City/State/Zip: Kansas City / MO / 64114	Phone: (913) 458 - 2000

RESPONSIBLE PERSON'S DECLARATION STATEMENT

I certify the following under penalty of perjury, under the laws of the State of California:
1. The information provided on this Certificate of Compliance is true and correct.
2. I am eligible under Division 3 of the Business and Professions Code to accept responsibility for the building design or system design identified on this Certificate of Compliance (responsible designer).
3. The energy features and performance specifications, materials, components, and manufactured devices for the building design or system design identified on this Certificate of Compliance conform to the requirements of Title 24, Part 1 and Part 6 of the California Code of Regulations.
4. The building design features or system design features identified on this Certificate of Compliance are consistent with the information provided on other applicable compliance documents, worksheets, calculations, plans and specifications submitted to the enforcement agency for approval with this building permit application.
5. I will ensure that a completed signed copy of this Certificate of Compliance shall be made available with the building permit(s) issued for the building, and made available to the enforcement agency for all applicable inspections. I understand that a completed signed copy of this Certificate of Compliance is required to be included with the documentation the builder provides to the building owner at occupancy.

Responsible Designer Name: Randy W Cantrell	Responsible Designer Signature:
Company: Black & Veatch	Date Signed:
Address: 8400 Ward Parkway	License: M36207
City/State/Zip: Kansas City, MO 64114	Phone: 913-458-3172

90% SUBMITTAL - NOT FOR CONSTRUCTION

NO.	BY	CHK	APP	DATE	REVISIONS AND RECORD OF USE
C	RKS	LDA	RWC	3/31/2020	90% SUBMITTAL
B	RKS	LDA	RWC	7/30/2019	60% SUBMITTAL
A	RKS	LDA	RWC	3/5/2019	30% SUBMITTAL

REGISTERED PROFESSIONAL ENGINEER — RANDY W. CANTRELL — No. M36207 — MECHANICAL — STATE OF CALIFORNIA

BLACK & VEATCH JOINT VENTURE — BLACK & VEATCH — FILANC

CITY OF MORRO BAY
MORRO BAY WRF
RECLAMATION FACILITY (WRF)

HVAC
TITLE 24 - COMPLIANCE FORM

DESIGNED: SAM
DETAILED: RKS
CHECKED: LDA
APPROVED: RWC
DATE: 3/31/2020

0 1/2 1
IF THIS BAR DOES NOT MEASURE 1" THEN DRAWING IS NOT TO FULL SCALE

PROJECT NO. 400530

00-H-604
SHEET OF

PLOTTED: 3/26/2020 9:24:51 AM
D400530

STATE OF CALIFORNIA
HVAC DRY & WET SYSTEM REQUIREMENTS
CEC-NRCC-MCH-02-E (Revised 01/16) — CALIFORNIA ENERGY COMMISSION

CERTIFICATE OF COMPLIANCE — NRCC-MCH-02-E
HVAC Dry System Requirements — (Page 1 of 3)
Project Name: CITY OF MORRO BAY WRF RECLAMATION FACILITY (WRF) — Date Prepared: 31/12/2019

A. Equipment Tags and System Description[1]- Dry Systems		80-HVAC-WPHP-0002	80-HVAC-WPHP-0003	80-HVAC-WPHP-0004
MANDATORY MEASURES	*T-24 Sections*	*Reference to the Requirements in the Contract Documents[2]*		
Heating Equipment Efficiency[3]	110.1 or 110.2(a)	N/A	N/A	N/A
Cooling Equipment Efficiency[3]	110.1 or 110.2(a)	00-H-601	00-H-601	00-H-601
HVAC or Heat Pump Thermostats	110.2(b), 110.2(c)	N/A	N/A	N/A
Furnace Standby Loss Control	110.2(d)	N/A	N/A	N/A
Low Leakage AHUs	110.2(f)	N/A	N/A	N/A
Ventilation[4]	120.1(b)	N/A	N/A	N/A
Demand Control Ventilation[5]	120.1(c)4	N/A	N/A	N/A
Occupant Sensor Ventilation Control[6]	120.1(c)5, 120.2(e)3	N/A	N/A	N/A
Shutoff and Reset Controls[7]	120.2(e)	00-H-601	00-H-601	00-H-601
Outdoor Air and Exhaust Damper Control	120.2(f)	N/A	N/A	N/A
Isolation Zones	120.2(g)	N/A	N/A	N/A
Automatic Demand Shed Controls	120.2(h)	N/A	N/A	N/A
Economizer FDD	120.2(i)	N/A	N/A	N/A
Duct Insulation	120.4	23 30 13 -3-3.06	23 30 13 -3-3.06	23 30 13 -3-3.06
PRESCRIPTIVE MEASURES				
Equipment is sized in conformance with 140.4 (a & b)	140.4(a & b)	(•) Yes ( ) No	(•) Yes ( ) No	(•) Yes ( ) No
Supply Fan Pressure Control	140.4(c)	N/A	N/A	N/A
Simultaneous Heat/Cool[8]	140.4(d)	N/A	N/A	N/A
Economizer	140.4(e)	YES	YES	YES
Heat and Cool Air Supply Reset	140.4(f)	YES	YES	YES
Electric Resistance Heating[9]	140.4(g)	N/A	N/A	N/A
Duct Leakage Sealing and Testing.[10]	140.4(l)	N/A	N/A	N/A

Notes:
1. *Provide equipment tags (e.g. AHU 1 to 10) and system description (e.g. Single Duct VAV reheat) as appropriate. Multiple units with common requirements can be grouped together.*
2. *Provide references to plans (i.e. Drawing Sheet Numbers) and/or specifications (including Section name/number and relevant paragraphs) where each requirement is specified. Enter "N/A" if the requirement is not applicable to this system.*
3. *The referenced plans and specifications must include all of the following information: equipment tag, equipment nominal capacity, Title 24 minimum efficiency requirements, and actual rated equipment efficiencies. Where multiple efficiency requirements are applicable (e.g. full- and part-load) include all. Where appliance standards apply (110.1), identify where equipment is required to be listed per Title 20 1601 et seq.*
4. *Identify where the ventilation requirements are documented for each central HVAC system. Include references to both central unit schedules and sequences of operation. If one or more spaces is naturally ventilated identify where this is documented in the plans and specifications. Multiple zone central air systems must also provide a MCH-03-E compliance document.*
5. *If one or more spaces has demand controlled ventilation identify where it is specified including the sensor specifications and the sequence of operation.*
6. *If one or more space has occupant sensor ventilation control identify where it is specified including the sensor specifications and the sequence of operation*
7. *If the system is DDC identify the sequences for the system start/stop, setback (if required) and setup (if required). For all systems identify the specification for the thermostats and time clocks (if applicable).*
8. *Identify where the heating, cooling and deadband airflows are scheduled for this system. Include a reference to the specification of the zone controls. Provide a MCH-03-E compliance document.*
9. *Enter N/A if there is no electric heating. If the system has electric heating indicate which exception to 140.4(g) applies.*
10. *If duct leakage sealing and testing is required, a MCH-04-A compliance document must be submitted.*

STATE OF CALIFORNIA
HVAC DRY & WET SYSTEM REQUIREMENTS
CEC-NRCC-MCH-02-E (Revised 01/16) — CALIFORNIA ENERGY COMMISSION

CERTIFICATE OF COMPLIANCE — NRCC-MCH-02-E
HVAC Dry & Wet System Requirements — (Page 2 of 3)
Project Name: CITY OF MORRO BAY WRF RECLAMATION FACILITY (WRF) — Date Prepared: 31/12/2019

B. Equipment Tags and System Description[1]- Wet Systems		N/A	N/A	N/A
MANDATORY MEASURES	*T-24 Sections*	*Reference to the Requirements in the Contract Documents[2]*		
Heating Hot Water Equipment Efficiency[3]	110.1			
Cooling Chilled and Condenser Water Equipment Efficiency[3]	110.1, 140.4(i)			
Open and Closed Circuit Cooling Towers conductivity or flow-based controls	110.2(e) 1			
Open and Closed Circuit Cooling Towers Maximum Achievable Cycles of Concentration (LSI)[6]	110.2(e) 2			
Open and Closed Circuit Cooling Towers Flow Meter with analog output	110.2(e) 3			
Open and Closed Circuit Cooling Towers Overflow Alarm	110.2(e) 4			
Open and Closed Circuit Cooling Towers Efficient Drift Eliminators	110.2(e) 5			
Pipe Insulation	120.3			
PRESCRIPTIVE MEASURES				
Cooling Tower Fan Controls	140.4(h)2, 140.4(h)5	( ) Yes ( ) No	( ) Yes ( ) No	( ) Yes ( ) No
Cooling Tower Flow Controls	140.4(h)3			
Centrifugal Fan Cooling Towers[4]	140.4(h)4			
Air-Cooled Chiller Limitation[5]	140.4(j)			
Variable Flow System Design	140.4(k)			
Chiller and Boiler Isolation	140.4(k)			
CHW and HHW Reset Controls	140.4(k)			
WLHP Isolation Valves	140.4(k)			
VSD on CHW, CW & WLHP Pumps >5HP	140.4(k)			
DP Sensor Location	140.4(k)			

Notes:
1. *Provide equipment tags (e.g. CH 1 to 3) or system description (e.g. CHW loop) as appropriate. Multiple units with common requirements can be grouped together.*
2. *Provide references to plans (i.e. Drawing Sheet Numbers) and/or specifications (including Section name/number and relevant paragraphs) where each requirement is specified. Enter "N/A" if the requirement is not applicable to this system.*
3. *The referenced plans and specifications must include all of the following information: equipment tag, equipment nominal capacity, Title 24 minimum efficiency requirements, and actual rated equipment efficiencies. Where multiple efficiency requirements are applicable (e.g. full- and part-load) include all. For chillers operating at non-standard efficiencies provide the Kadj values. For chillers also note whether the efficiencies are Path A or Path B.*
4. *Identify if cooling towers have propeller fans. If towers use centrifugal fans document which exception is used.*
5. *If air-cooled chillers are used, document which exceptions have been used to comply with 140.4(j) and the total installed design capacity of the air-cooled chillers in the chilled water plant.*
6. *Identify the existence of a completed MCH-06-E when open or closed circuit cooling towers are specified to be installed, otherwise enter "N/A".*

STATE OF CALIFORNIA
HVAC SYSTEM REQUIREMENTS
CEC-NRCC-MCH-02-E (Revised 01/16) — CALIFORNIA ENERGY COMMISSION

CERTIFICATE OF COMPLIANCE — NRCC-MCH-02-E
HVAC Wet System Requirements — (Page 3 of 3)
Project Name: CITY OF MORRO BAY WRF RECLAMATION FACILITY (WRF) — Date Prepared: 31/12/2019

DOCUMENTATION AUTHOR'S DECLARATION STATEMENT

1. I certify that this Certificate of Compliance documentation is accurate and complete.

Documentation Author Name: Randy W Cantrell	Documentation Author Signature:
Company: Black & Veatch	Signature Date:
Address: 8400 Ward Parkway	CEA/ HERS Certification Identification (if applicable):
City/State/Zip: Kansas City / MO / 64114	Phone: (913) 458 - 2000

RESPONSIBLE PERSON'S DECLARATION STATEMENT

I certify the following under penalty of perjury, under the laws of the State of California:
1. The information provided on this Certificate of Compliance is true and correct.
2. I am eligible under Division 3 of the Business and Professions Code to accept responsibility for the building design or system design identified on this Certificate of Compliance (responsible designer).
3. The energy features and performance specifications, materials, components, and manufactured devices for the building design or system design identified on this Certificate of Compliance conform to the requirements of Title 24, Part 1 and Part 6 of the California Code of Regulations.
4. The building design features or system design features identified on this Certificate of Compliance are consistent with the information provided on other applicable compliance documents, worksheets, calculations, plans and specifications submitted to the enforcement agency for approval with this building permit application.
5. I will ensure that a completed signed copy of this Certificate of Compliance shall be made available with the building permit(s) issued for the building, and made available to the enforcement agency for all applicable inspections. I understand that a completed signed copy of this Certificate of Compliance is required to be included with the documentation the builder provides to the building owner at occupancy.

Responsible Designer Name: Randy W Cantrell	Responsible Designer Signature:
Company: Black & Veatch	Date Signed:
Address: 8400 Ward Parkway	License: M36207
City/State/Zip: Kansas City, MO 64114	Phone: 913-458-3172

90% SUBMITTAL - NOT FOR CONSTRUCTION

NO.	BY	CHK	APP	DATE	REVISIONS AND RECORD OF USE
C	RKS	LDA	RWC	3/31/2020	90% SUBMITTAL
B	RKS	LDA	RWC	7/30/2019	60% SUBMITTAL
A	RKS	LDA	RWC	3/5/2019	30% SUBMITTAL

REGISTERED PROFESSIONAL ENGINEER — RANDY W. CANTRELL — No. M36207 — MECHANICAL — STATE OF CALIFORNIA

BLACK & VEATCH JOINT VENTURE — BLACK & VEATCH — FILANC

CITY OF MORRO BAY
MORRO BAY WRF
RECLAMATION FACILITY (WRF)

HVAC
TITLE 24 - COMPLIANCE FORM

DESIGNED: SAM
DETAILED: RKS
CHECKED: LDA
APPROVED: RWC
DATE: 3/31/2020

0 1/2 1
IF THIS BAR DOES NOT MEASURE 1" THEN DRAWING IS NOT TO FULL SCALE

PROJECT NO. 400530

00-H-605
SHEET OF

PLOTTED: 3/26/2020 9:24:52 AM
D400530

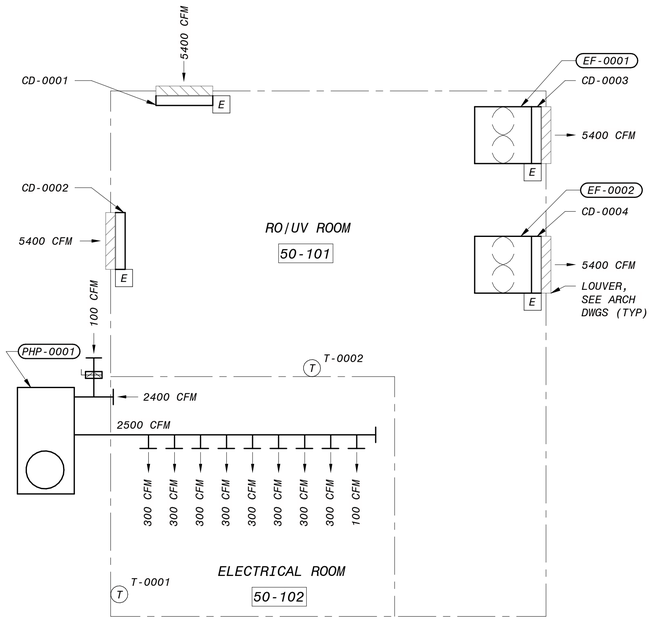

HVAC AIR FLOW DIAGRAM - RO/UV BUILDING 050

NO SCALE

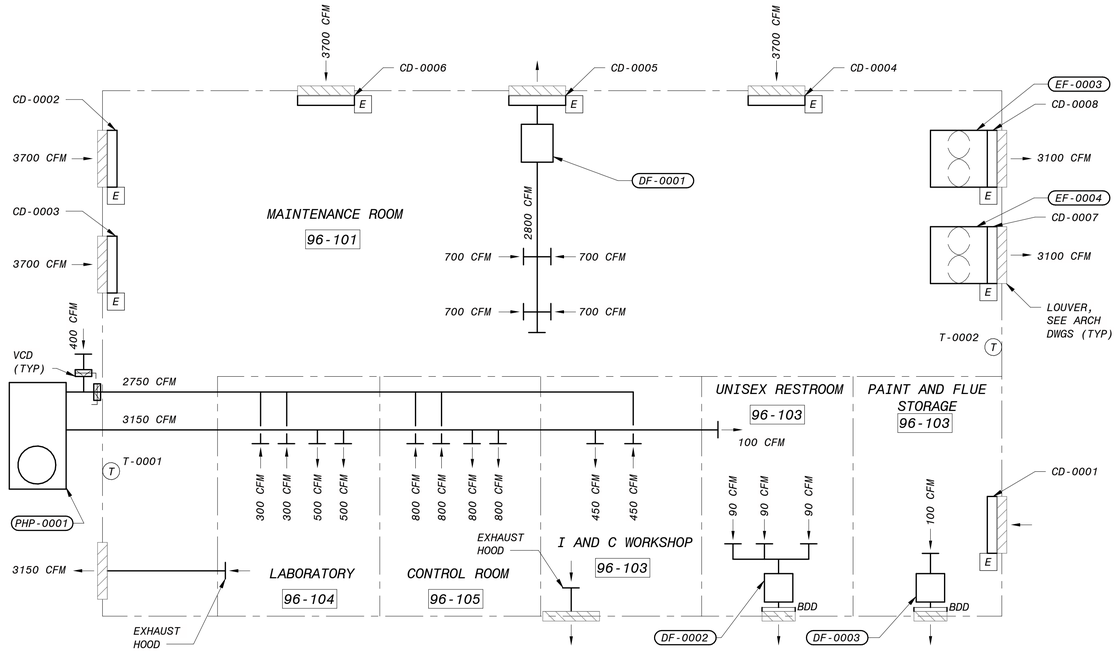

HVAC AIR FLOW DIAGRAM - MAINTENANCE BUILDING 096

NO SCALE

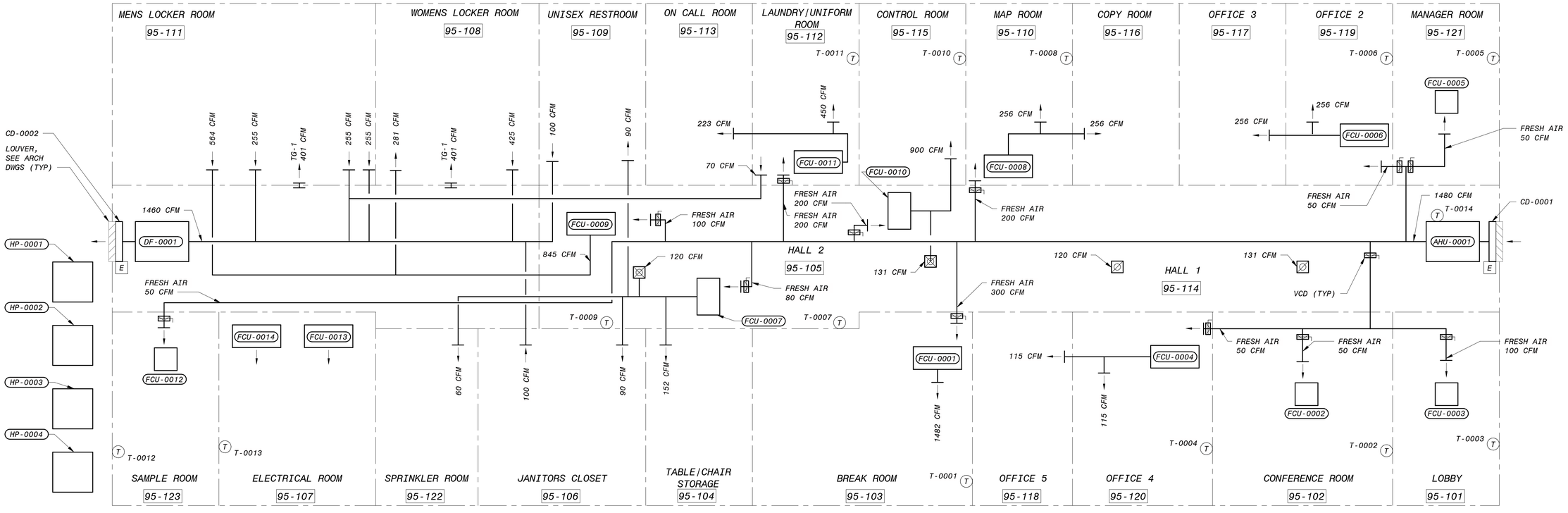

HVAC AIR FLOW DIAGRAM - OPERATIONS BUILDING 095

NO SCALE

90% SUBMITTAL - NOT FOR CONSTRUCTION

NO.	BY	CHK	APP	DATE	REVISIONS AND RECORD OF USE
C	RKS	LDA	RWC	3/31/2020	90% SUBMITTAL
B	RKS	LDA	RWC	7/30/2019	60% SUBMITTAL
A	RKS	LDA	RWC	3/5/2019	30% SUBMITTAL

REGISTERED PROFESSIONAL ENGINEER
RANDY W. CANTRELL
No. M36207
MECHANICAL
STATE OF CALIFORNIA

BLACK & VEATCH
JOINT VENTURE
FILANC

CITY OF MORRO BAY
MORRO BAY WRF
RECLAMATION FACILITY (WRF)

HVAC SCHEMATICS

DESIGNED: SAM
DETAILED: RKS
CHECKED: LDA
APPROVED: RWC
DATE: 3/31/2020

0 1/2 1
IF THIS BAR DOES NOT MEASURE 1" THEN DRAWING IS NOT TO FULL SCALE

PROJECT NO. 400530

00-H-701
SHEET OF

PLOTTED: 3/26/2020 9:24:52 AM
D400530

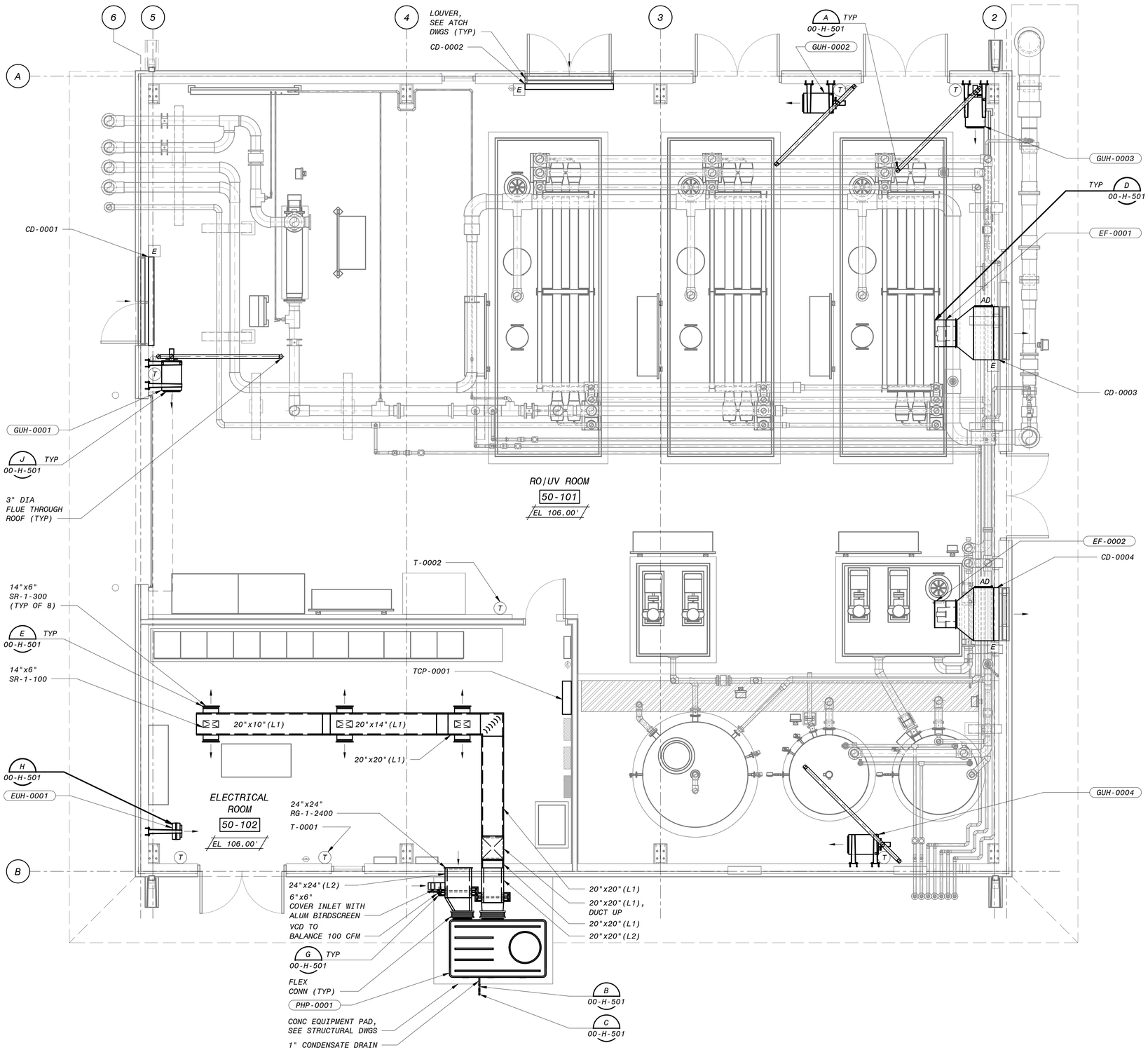

OPERATING FLOOR PLAN - EL 106'

1/4" = 1'-0"

GENERAL NOTES

1. EQUIPMENT TAGS FOR EVERYTHING ON SHEET BEGINS WITH 50-HVAC.

NO.	BY	CHK	APP	DATE	REVISIONS AND RECORD OF USE
C	RKS	LDA	RWC	3/31/2020	90% SUBMITTAL
B	RKS	LDA	RWC	7/30/2019	60% SUBMITTAL
A	RKS	LDA	RWC	3/5/2019	30% SUBMITTAL

REGISTERED PROFESSIONAL ENGINEER
RANDY W. CANTRELL
No. M36207
MECHANICAL
STATE OF CALIFORNIA

BLACK & VEATCH

JOINT VENTURE

BLACK & VEATCH

FILANC

CITY OF MORRO BAY
MORRO BAY WRF
RECLAMATION FACILITY (WRF)

RO/UV BUILDING
HVAC
PLAN

DESIGNED: SAM
DETAILED: RKS
CHECKED: LDA
APPROVED: RWC
DATE: 3/31/2020

0 1/2 1
IF THIS BAR DOES NOT MEASURE 1" THEN DRAWING IS NOT TO FULL SCALE

PROJECT NO.
400530

50-H-101
SHEET
OF

4' 2' 0' 4' 8'
1/4" = 1'-0"

90% SUBMITTAL - NOT FOR CONSTRUCTION

PLOTTED: 3/26/2020 9:37:07 AM
D400530

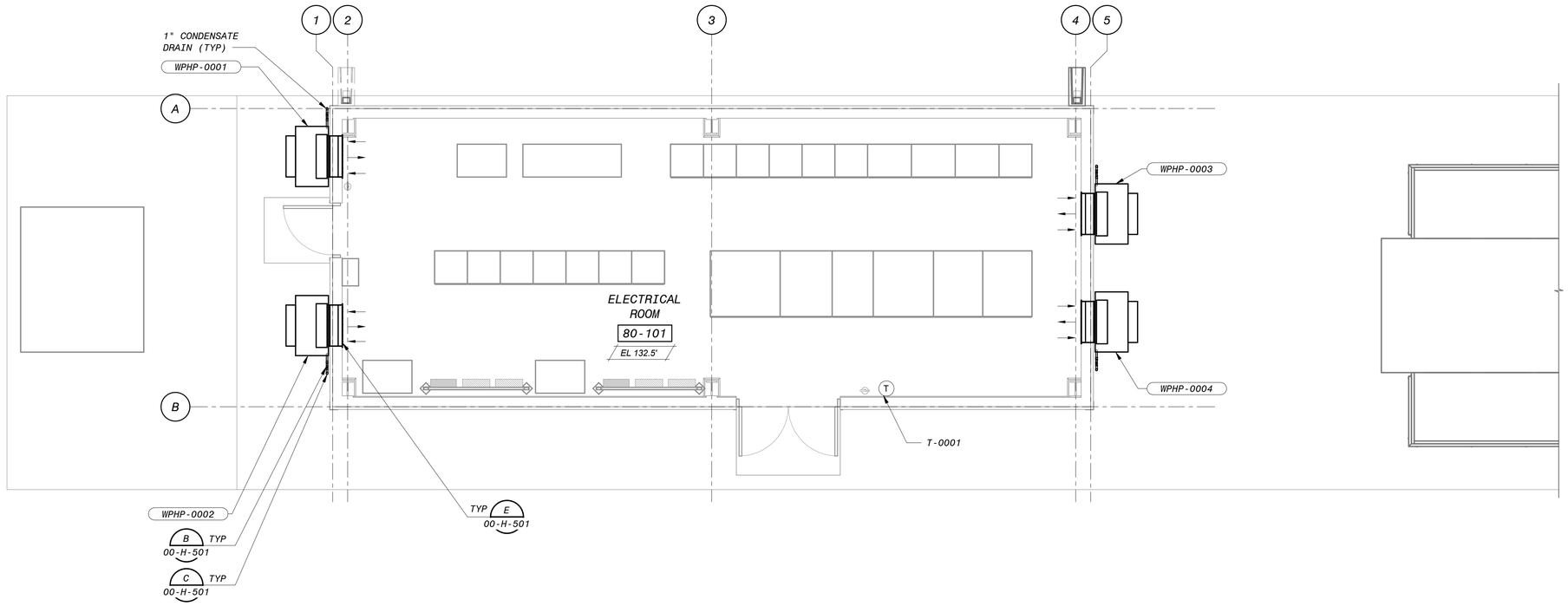

OPERATING LEVEL

1/4" = 1'-0"

GENERAL NOTES

1. EQUIPMENT TAGS FOR EVERYTHING ON SHEET BEGINS WITH 80-HVAC.

4' 2' 0' 4' 8'

1/4" = 1'-0"

90% SUBMITTAL -NOT FOR CONSTRUCTION

NO.	BY	CHK	APP	DATE	REVISIONS AND RECORD OF USE
A	RKS	LDA	RWC	3/31/2020	90% SUBMITTAL

REGISTERED PROFESSIONAL ENGINEER
RANDY W. CANTRELL
No. M36207
MECHANICAL
STATE OF CALIFORNIA

BLACK & VEATCH

JOINT VENTURE

BLACK & VEATCH

FILANC

CITY OF MORRO BAY
MORRO BAY WRF
RECLAMATION FACILITY (WRF)

ELECTRICAL BUILDING
HVAC
PLAN

DESIGNED: SAM
DETAILED: RKS
CHECKED: LDA
APPROVED: RWC
DATE: 3/31/2020

0 1/2 1
IF THIS BAR DOES NOT MEASURE 1" THEN DRAWING IS NOT TO FULL SCALE

PROJECT NO.
400530

80-H-101
SHEET
OF

PLOTTED: 3/26/2020 9:04:46 PM
D400530

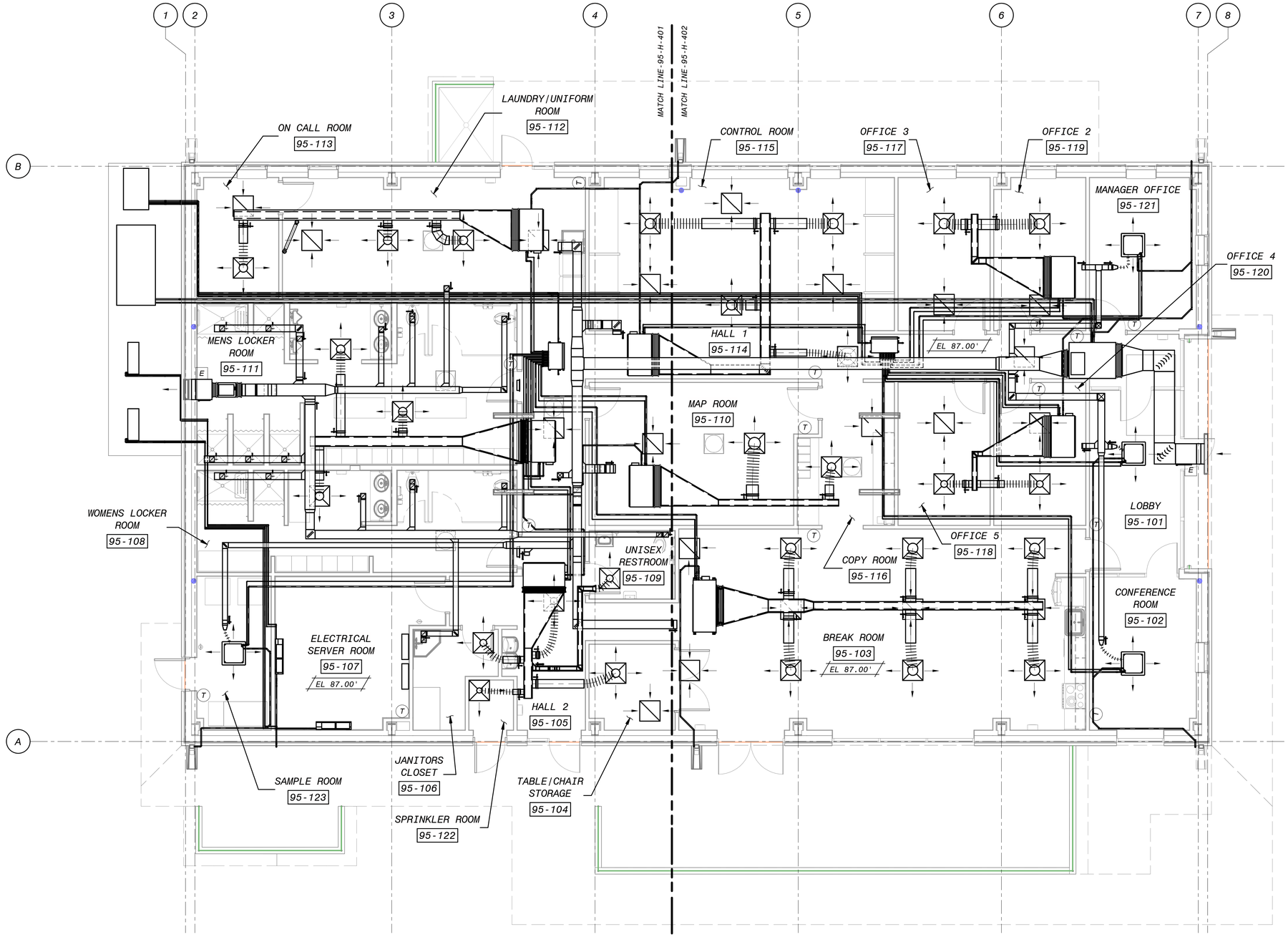

OPERATING FLOOR PLAN - OVERALL

3/16" = 1'-0"

6" 4' 2' 0' 5' 10'

3/16" = 1'-0"

90% SUBMITTAL- NOT FOR CONSTRUCTION

NO.	BY	CHK	APP	DATE	REVISIONS AND RECORD OF USE
C	RKS	LDA	RWC	3/31/2020	90% SUBMITTAL
B	RKS	LDA	RWC	7/30/2019	60% SUBMITTAL
A	RKS	LDA	RWC	3/5/2019	30% SUBMITTAL

REGISTERED PROFESSIONAL ENGINEER
RANDY W. CANTRELL
No. M36207
MECHANICAL
STATE OF CALIFORNIA

BLACK & VEATCH
JOINT VENTURE
BLACK & VEATCH
FILANC

CITY OF MORRO BAY
MORRO BAY WRF
RECLAMATION FACILITY (WRF)

OPERATIONS BUILDING
HVAC
OVERALL OPERATING FLOOR PLAN

DESIGNED: SAM
DETAILED: RKS
CHECKED: LDA
APPROVED: RWC
DATE: 3/31/2020

0 1/2 1
IF THIS BAR DOES NOT MEASURE 1" THEN DRAWING IS NOT TO FULL SCALE

PROJECT NO.
400530

95-H-101
SHEET
OF

PLOTTED: 3/26/2020 9:52:19 AM
D400530

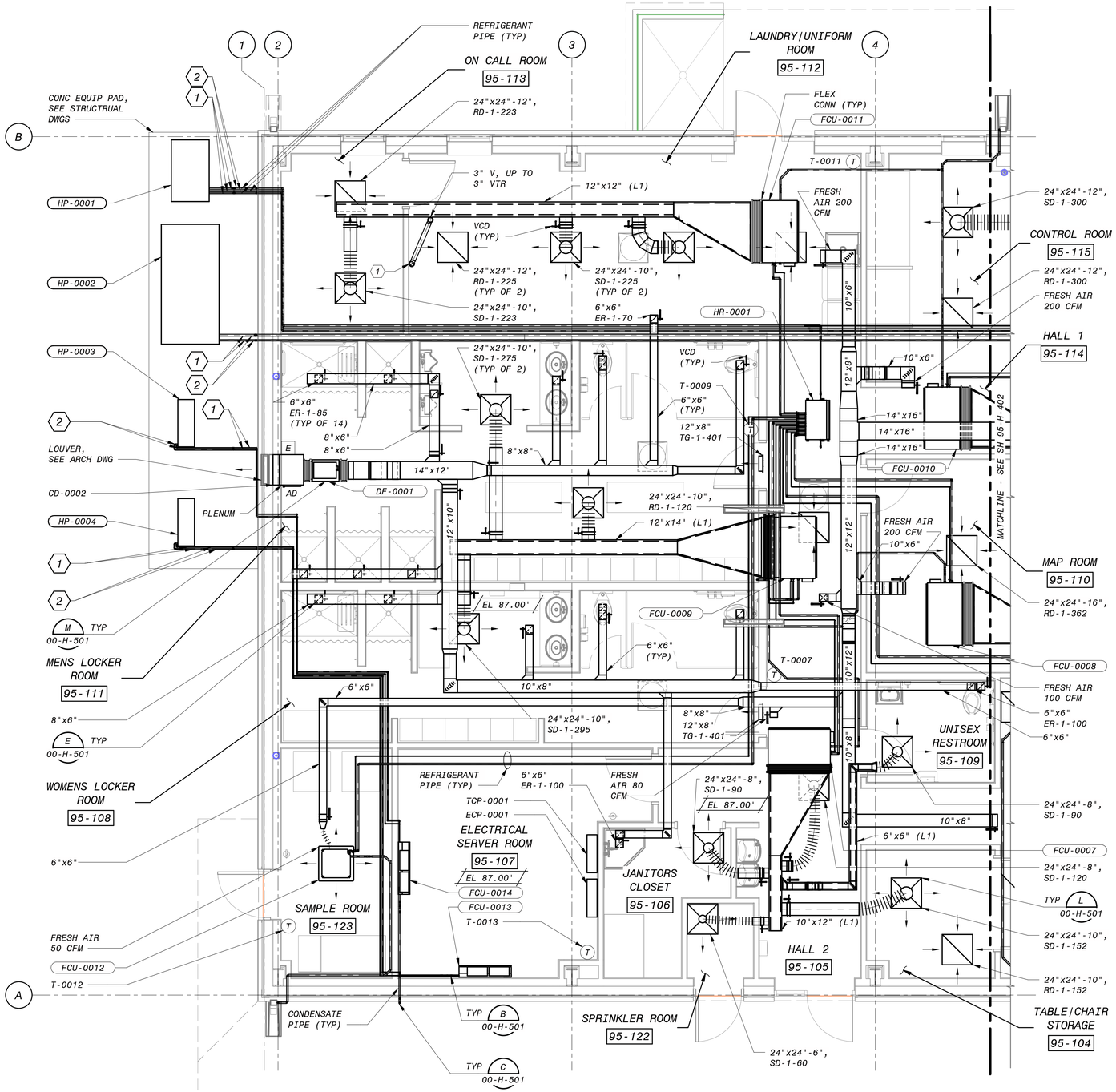

ENLARGED PLAN - WEST - EL 87.00'

1/4" = 1'-0"

GENERAL NOTES

1. HR - BRANCH SELECTOR BOX SHOWN AS TENTATIVE REPRESENTATION. ACTUAL SIZES SHALL BE AS PER VENDOR SUBMITTALS.
2. ALL THERMOSTATS ARE ROOM CONTROLLERS THAT SHALL BE PROVIDED AS AN ACCESSORY TO THE VARIABLE REFRIGERANT FLOW SYSTEM.
3. EQUIPMENT TAGS FOR EVERYTHING ON SHEET BEGINS WITH 95-HVAC.

SHEET KEYNOTES

1. REFRIGERANT PIPES TO BE SUPPORTED ON GRADE WITH DURA-BLOCK™ PIPE SUPPORT OUT SIDE THE BUILDING.
2. SIZE REFRIGERANT SUCTION AND LIQUID LINE SETS PER MANUFACTURERS INSTRUCTION. PROVIDE ALL APPURTENANCES FOR A FULLY FUNCTIONAL SYSTEM.

4' 2' 0' 4' 8'

1/4" = 1'-0"

NO.	BY	CHK	APP	DATE	REVISIONS AND RECORD OF USE
C	RKS	LDA	RWC	3/31/2020	90% SUBMITTAL
B	RKS	LDA	RWC	7/30/2019	60% SUBMITTAL
A	RKS	LDA	RWC	3/5/2019	30% SUBMITTAL

REGISTERED PROFESSIONAL ENGINEER
RANDY W. CANTRELL
No. M36207
MECHANICAL
STATE OF CALIFORNIA

BLACK & VEATCH
JOINT VENTURE
BLACK & VEATCH
FILANC

CITY OF MORRO BAY
MORRO BAY WRF
RECLAMATION FACILITY (WRF)

OPERATIONS BUILDING
HVAC
ENLARGED OPERATING FLOOR PLAN - WEST

DESIGNED:	SAM
DETAILED:	RKS
CHECKED:	LDA
APPROVED:	RWC
DATE:	3/31/2020

0 1/2 1

IF THIS BAR DOES NOT MEASURE 1" THEN DRAWING IS NOT TO FULL SCALE

PROJECT NO. 400530

95-H-401
SHEET
OF

90% SUBMITTAL - NOT FOR CONSTRUCTION

PLOTTED: 3/26/2020 9:52:23 AM
D400530

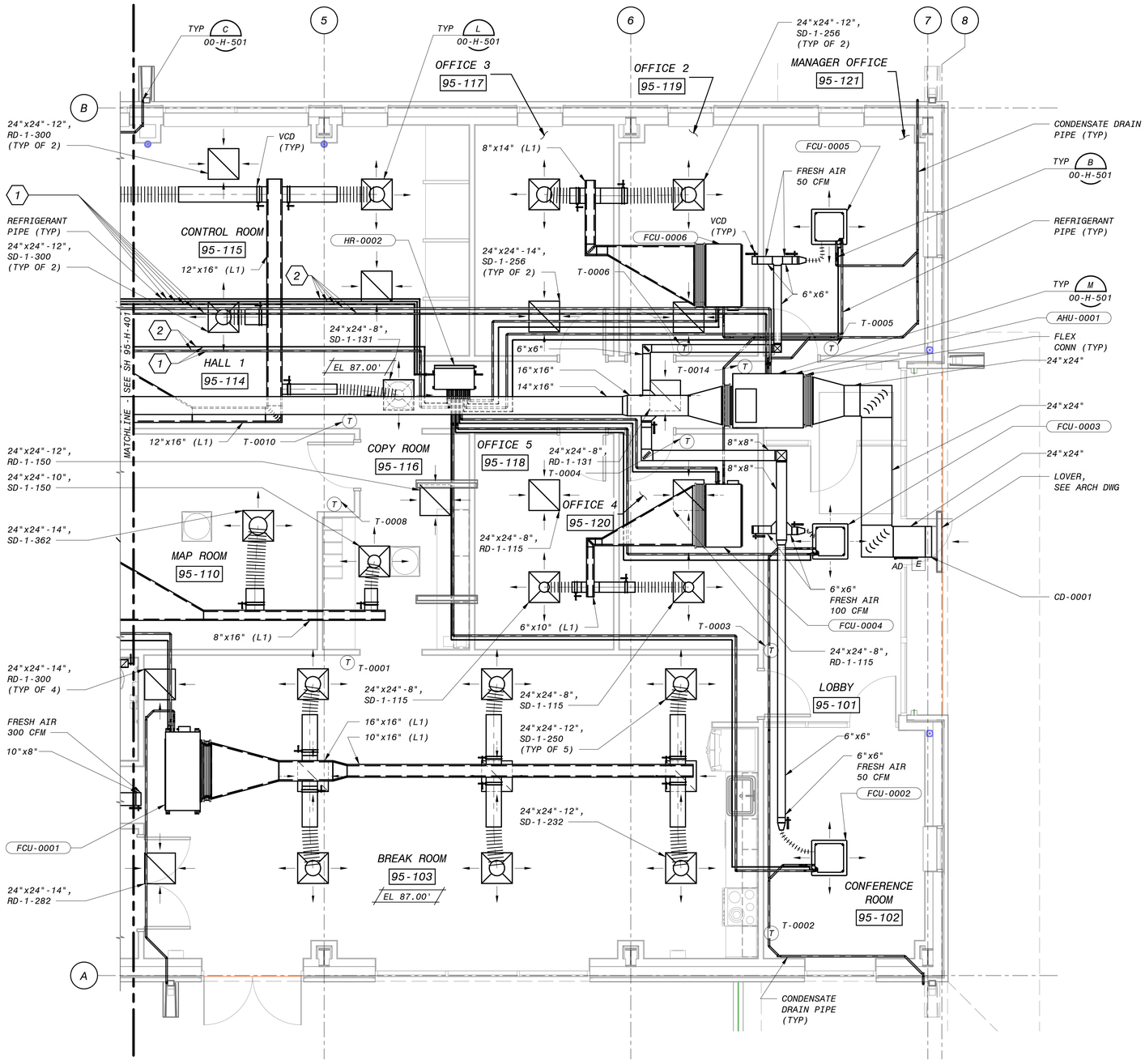

ENLARGED PLAN - EAST - EL 87.00'

1/4" = 1'-0"

GENERAL NOTES

1. HR - BRANCH SELECTOR BOX SHOWN AS TENTATIVE REPRESENTATION. ACTUAL SIZES SHALL BE AS PER VENDOR SUBMITTALS.
2. ALL THERMOSTATS ARE ROOM CONTROLLERS THAT SHALL BE PROVIDED AS AN ACCESSORY TO THE VERIABLE REFRIGERANT FLOW SYSTEM.
3. EQUIPMENT TAGS FOR EVERYTHING ON SHEET BEGINS WITH 95-HVAC.

SHEET KEYNOTES

1. REFRIGERANT PIPES TO BE SUPPORTED ON GRADE WITH DURA-BLOCK™ PIPE SUPPORT OUT SIDE THE BUILDING.
2. SIZE REFRIGERANT SUCTION AND LIQUID LINE SETS PER MANUFACTURERS INSTRUCTION. PROVIDE ALL APPURTENANCES FOR A FULLY FUNCTIONAL SYSTEM.

4' 2' 0' 4' 8'

1/4" = 1'-0"

90% SUBMITTAL - NOT FOR CONSTRUCTION

NO.	BY	CHK	APP	DATE	REVISIONS AND RECORD OF USE
C	RKS	LDA	RWC	3/31/2020	90% SUBMITTAL
B	RKS	LDA	RWC	7/30/2019	60% SUBMITTAL
A	RKS	LDA	RWC	3/5/2019	30% SUBMITTAL

REGISTERED PROFESSIONAL ENGINEER
RANDY W. CANTRELL
No. M36207
MECHANICAL
STATE OF CALIFORNIA

BLACK & VEATCH JOINT VENTURE
BLACK & VEATCH
FILANC

CITY OF MORRO BAY
MORRO BAY WRF
RECLAMATION FACILITY (WRF)

OPERATIONS BUILDING
HVAC
ENLARGED OPERATING FLOOR PLAN - EAST

DESIGNED:	SAM
DETAILED:	RKS
CHECKED:	LDA
APPROVED:	RWC
DATE:	3/31/2020

0 1/2 1
IF THIS BAR DOES NOT MEASURE 1" THEN DRAWING IS NOT TO FULL SCALE

PROJECT NO. 400530

95-H-402
SHEET OF

PLOTTED: 3/26/2020 9:52:24 AM
D400530

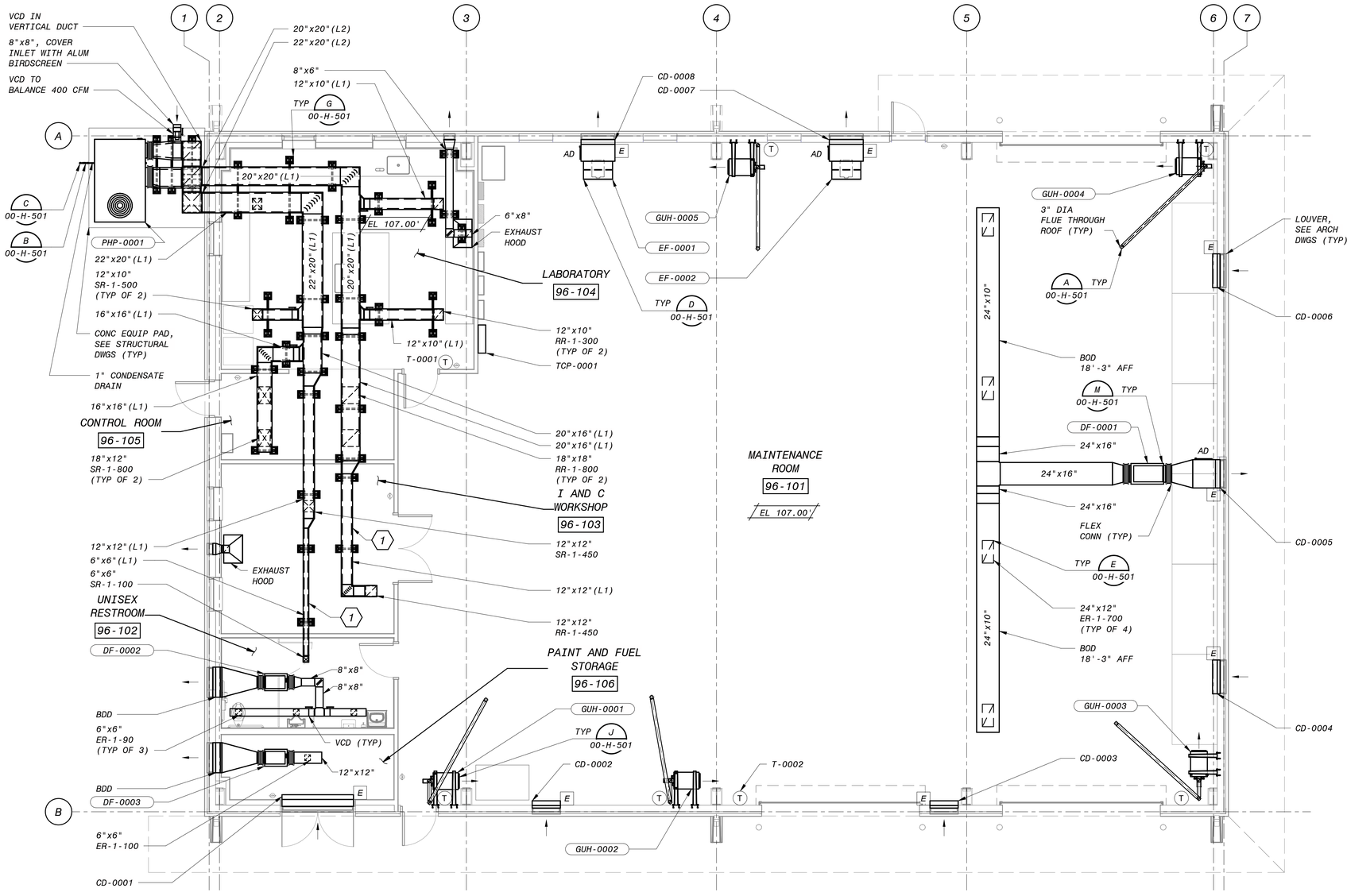

OPERATING FLOOR PLAN - EL 107.00'

3/16" = 1'-0"

GENERAL SHEET NOTES

1. EQUIPMENT TAGS FOR EVERYTHING ON THIS SHEET BEGINS WITH 96-HVAC.

SHEET KEYNOTES

1. ALL SUPPLY AND RETURN DUCTWORK SHALL BE ABOVE THE LABORATORY, CONTROL ROOM AND I & C WORKSHOP.

NO.	BY	CHK	APP	DATE	REVISIONS AND RECORD OF USE
C	RKS	LDA	RWC	3/31/2020	90% SUBMITTAL
B	RKS	LDA	RWC	7/30/2019	60% SUBMITTAL
A	MDS	LDA	RWC	3/5/2019	30% SUBMITTAL

REGISTERED PROFESSIONAL ENGINEER
RANDY W. CANTRELL
No. M36207
MECHANICAL
STATE OF CALIFORNIA

BLACK & VEATCH JOINT VENTURE
BLACK & VEATCH
FILANC

CITY OF MORRO BAY
MORRO BAY WRF
RECLAMATION FACILITY (WRF)

MAINTENANCE BUILDING
HVAC
PLAN

DESIGNED: SAM
DETAILED: RKS
CHECKED: LDA
APPROVED: RWC
DATE: 3/31/2020

0 1/2 1
IF THIS BAR DOES NOT MEASURE 1" THEN DRAWING IS NOT TO FULL SCALE

PROJECT NO. 400530

96-H-101
SHEET OF

6" 4' 2' 0' 5' 10'
3/16" = 1'-0"

90% SUBMITTAL - NOT FOR CONTRUCTION

PLOTTED: 3/26/2020 10:18:07 AM
D400530

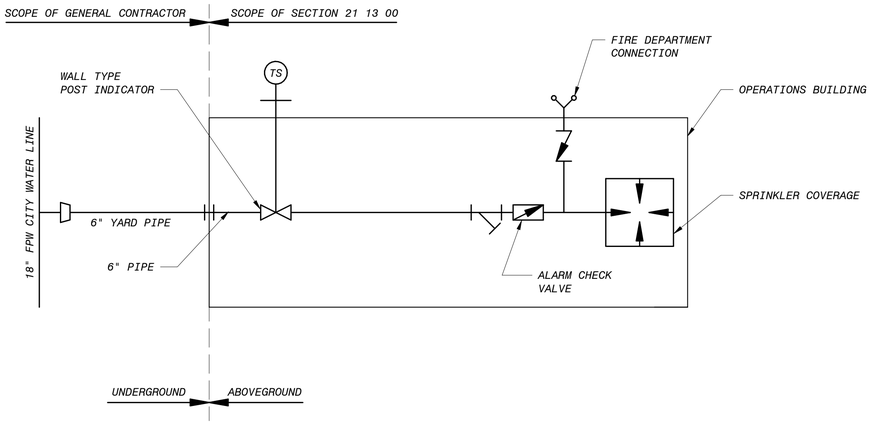

FIRE SUPPRESSION SYSTEM SCHEMATIC

NO SCALE



GENERAL SHEET NOTES

1. WET AUTOMATIC SPRINKLER SYSTEM TO BE DESIGNED AND INSTALLED PER NFPA 13.
2. SPRINKLER SYSTEM SHALL BE DESIGNED FOR LIGHT HAZARD OCCUPANCY.
3. FIRE DEPARTMENT CONNECTION FOR SPRINKLER SYSTEM WILL BE PROVIDED OUTSIDE OF THE BUILDING.
4. SPRINKLER SUBCONTRACTOR SHALL BE RESPONSIBLE FOR EVERYTHING SHOWN ON THIS DWG.
5. WATER SUPPLY TO BUILDING SPRINKLER RISER LOCATION WILL BE PROVIDED BY GENERAL CONTRACTOR. A FLANGED 6 INCH DUCTILE IRON CEMENT LINED PIPE (CLASS 350) CONNECTION 1 FT ABOVE FINISHED GRADE WILL BE PROVIDED BY GENERAL CONTRACTOR.
6. FIRE CONTROL PANEL (FACP), SMOKE DETECTION, AND NOTIFICATION DEVICES TO BE INSTALLED BY OTHERS IN ACCORDANCE WITH NFPA 72.
7. WALL PENETRATION BY FIRE PROTECTION SYSTEM SHALL MAINTAIN FIRE RATING OF THE PENETRATED WALL PER ACCEPTED UL RATED SYSTEM.
8. WALL TYPE POST INDICATOR VALVE UPSTREAM OF SPRINKLER ALARM VALVE INSIDE THE BUILDING SHALL BE PROVIDED BY SPRINKLER SUBCONTRACTOR.

NO.	BY	CHK	APP	DATE	REVISIONS AND RECORD OF USE
C	BAR	RWC	RWC	3/31/2020	90% SUBMITTAL
B	BAR	RWC	RWC	7/30/2019	60% SUBMITTAL
A	BAR	RWC	RWC	3/5/2019	30% SUBMITTAL

REGISTERED PROFESSIONAL ENGINEER
RANDY W. CANTRELL
No. M36207
MECHANICAL
STATE OF CALIFORNIA

BLACK & VEATCH

JOINT VENTURE

BLACK & VEATCH

FILANC

CITY OF MORRO BAY
MORRO BAY WRF
RECLAMATION FACILITY (WRF)

OPERATIONS BUILDING
FIRE SUPPRESSION SYSTEM
SCHEMATIC

DESIGNED: TA
DETAILED: BAR
CHECKED: RWC
APPROVED: RWC
DATE: 3/31/2020

0 1/2 1
IF THIS BAR DOES NOT MEASURE 1" THEN DRAWING IS NOT TO FULL SCALE

PROJECT NO.
400530

95-F-001
SHEET
OF

90% SUBMITTAL - NOT FOR CONSTRUCTION

PLOTTED: 3/26/2020 9:11:25 PM
D400530

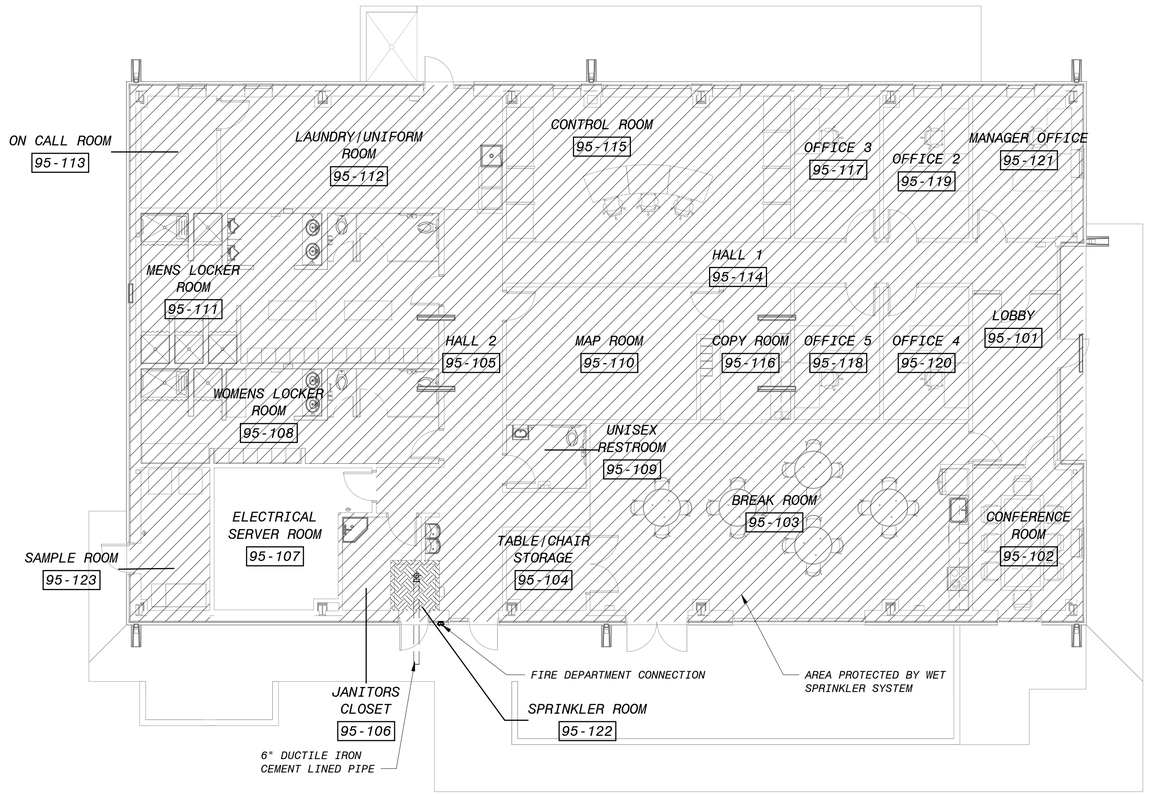

FIRE SUPPRESSION SYSTEM PLAN

1/8" = 1'-0"

GENERAL SHEET NOTES

1. WET AUTOMATIC SPRINKLER SYSTEM TO BE DESIGNED AND INSTALLED PER NFPA 13.
2. SPRINKLER SYSTEM SHALL BE DESIGNED FOR LIGHT HAZARD OCCUPANCY.
3. FIRE DEPARTMENT CONNECTION FOR SPRINKLER SYSTEM WILL BE PROVIDED OUTSIDE OF THE BUILDING.
4. SPRINKLER SUBCONTRACTOR SHALL BE RESPONSIBLE FOR EVERYTHING SHOWN ON THIS DWG.
5. WATER SUPPLY TO BUILDING SPRINKLER RISER LOCATION WILL BE PROVIDED BY GENERAL CONTRACTOR. A FLANGED 6 INCH DUCTILE IRON CEMENT LINED PIPE (CLASS 350) CONNECTION 1 FT ABOVE FINISHED GRADE WILL BE PROVIDED BY GENERAL CONTRACTOR.
6. FIRE CONTROL PANEL (FACP), SMOKE DETECTION, AND NOTIFICATION DEVICES TO BE INSTALLED BY OTHERS IN ACCORDANCE WITH NFPA 72.
7. WALL PENETRATION BY FIRE PROTECTION SYSTEM SHALL MAINTAIN FIRE RATING OF THE PENETRATED WALL PER ACCEPTED UL RATED SYSTEM.
8. WALL TYPE POST INDICATOR VALVE UPSTREAM OF SPRINKLER ALARM VALVE INSIDE THE BUILDING SHALL BE PROVIDED BY SPRINKLER SUBCONTRACTOR.

8' 4' 0' 8' 16'

1/8" = 1'-0"

90% SUBMITTAL - NOT FOR CONSTRUCTION

NO.	BY	CHK	APP	DATE	REVISIONS AND RECORD OF USE
C	BAR	RWC	RWC	3/31/2020	90% SUBMITTAL
B	BAR	RWC	RWC	7/30/2019	60% SUBMITTAL
A	BAR	RWC	RWC	3/5/2019	30% SUBMITTAL

REGISTERED PROFESSIONAL ENGINEER
RANDY W. CANTRELL
No. M36207
MECHANICAL
STATE OF CALIFORNIA

BLACK & VEATCH JOINT VENTURE
BLACK & VEATCH
FILANC

CITY OF MORRO BAY
MORRO BAY WRF
RECLAMATION FACILITY (WRF)

OPERATIONS BUILDING
FIRE SUPRESSION SYSTEM
PLAN

DESIGNED: TA
DETAILED: BAR
CHECKED: RWC
APPROVED: RWC
DATE: 3/31/2020

0 1/2 1
IF THIS BAR DOES NOT MEASURE 1" THEN DRAWING IS NOT TO FULL SCALE

PROJECT NO.
400530

95-F-101
SHEET
OF

PLOTTED: 3/26/2020 9:08:59 PM
D400530

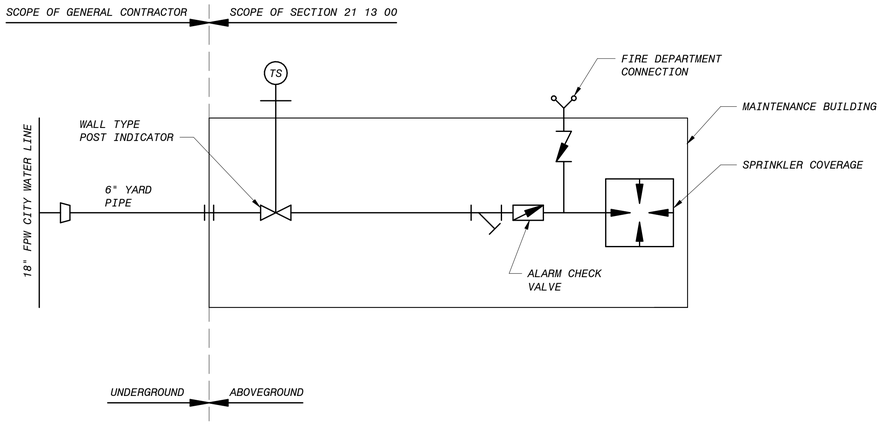

SCHEMATIC OF FIRE SUPPRESSION SYSTEM

NO SCALE

GENERAL SHEET NOTES

1. WET AUTOMATIC SPRINKLER SYSTEM TO BE DESIGNED AND INSTALLED PER NFPA 13.
2. SPRINKLER SYSTEM SHALL BE DESIGNED FOR ORDINARY HAZARD GROUP 2 OCCUPANCY.
3. FIRE DEPARTMENT CONNECTION FOR SPRINKLER SYSTEM WILL BE PROVIDED OUTSIDE OF THE BUILDING.
4. SPRINKLER SUBCONTRACTOR SHALL BE RESPONSIBLE FOR EVERYTHING SHOWN ON THIS DWG.
5. WATER SUPPLY TO BUILDING SPRINKLER RISER LOCATION WILL BE PROVIDED BY GENERAL CONTRACTOR. A FLANGED 6 INCH DUCTILE IRON CEMENT LINED PIPE (CLASS 350) CONNECTION 1 FT ABOVE FINISHED GRADE WILL BE PROVIDED BY GENERAL CONTRACTOR.
6. FIRE CONTROL PANEL (FACP), SMOKE DETECTION, AND NOTIFICATION DEVICES TO BE INSTALLED BY OTHERS IN ACCORDANCE WITH NFPA 72.
7. WALL PENETRATION BY FIRE PROTECTION SYSTEM SHALL MAINTAIN FIRE RATING OF THE PENETRATED WALL PER ACCEPTED UL RATED SYSTEM.
8. WALL TYPE POST INDICATOR VALVE UPSTREAM OF SPRINKLER ALARM VALVE INSIDE THE BUILDING SHALL BE PROVIDED BY SPRINKLER SUBCONTRACTOR.

NO.	BY	CHK	APP	DATE	REVISIONS AND RECORD OF USE
C	BAR	RWC	RWC	3/31/2020	90% SUBMITTAL
B	BAR	RWC	RWC	7/30/2019	60% SUBMITTAL
A	BAR	RWC	RWC	3/5/2019	30% SUBMITTAL

REGISTERED PROFESSIONAL ENGINEER
RANDY W. CANTRELL
No. M36207
MECHANICAL
STATE OF CALIFORNIA

BLACK & VEATCH
JOINT VENTURE
BLACK & VEATCH
FILANC

CITY OF MORRO BAY
MORRO BAY WRF
RECLAMATION FACILITY (WRF)

MAINTENANCE BUILDING
FIRE SUPPRESSION SYSTEM
SCHEMATIC

DESIGNED: TA
DETAILED: BAR
CHECKED: RWC
APPROVED: RWC
DATE: 3/31/2020

0 1/2 1
IF THIS BAR DOES NOT MEASURE 1" THEN DRAWING IS NOT TO FULL SCALE

PROJECT NO.
400530

96-F-001
SHEET
OF

90% SUBMITTAL - NOT FOR CONSTRUCTION

PLOTTED: 3/26/2020 9:15:52 PM
D400530

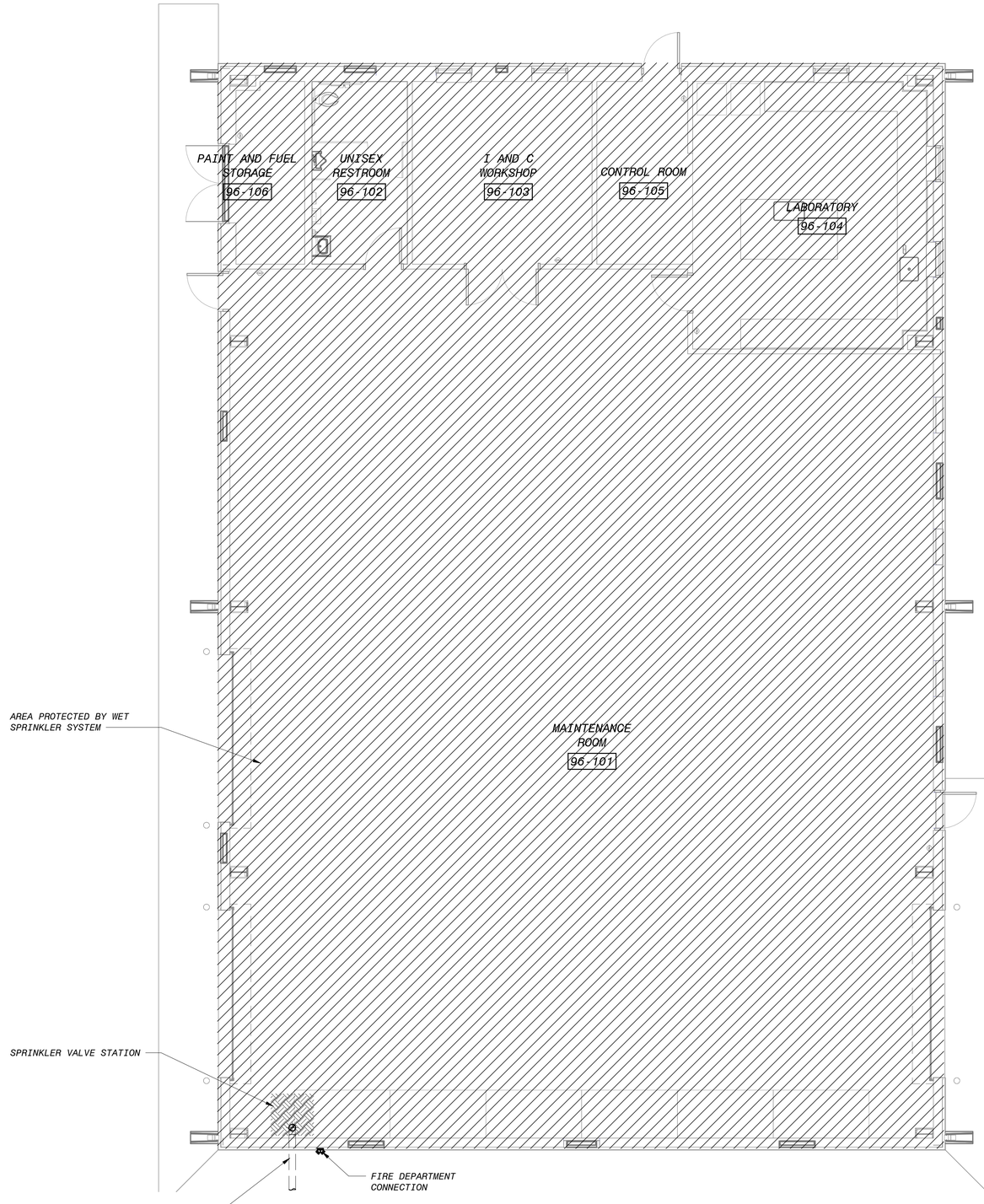

FIRE SUPPRESSION SYSTEM PLAN

3/16" = 1'-0"

GENERAL SHEET NOTES

1. WET AUTOMATIC SPRINKLER SYSTEM TO BE DESIGNED AND INSTALLED PER NFPA 13.
2. SPRINKLER SYSTEM SHALL BE DESIGNED FOR ORDINARY HAZARD GROUP 2 OCCUPANCY.
3. FIRE DEPARTMENT CONNECTION FOR SPRINKLER SYSTEM WILL BE PROVIDED OUTSIDE OF THE BUILDING.
4. SPRINKLER SUBCONTRACTOR SHALL BE RESPONSIBLE FOR EVERYTHING SHOWN ON THIS DWG.
5. WATER SUPPLY TO BUILDING SPRINKLER RISER LOCATION WILL BE PROVIDED BY GENERAL CONTRACTOR. A FLANGED 6 INCH DUCTILE IRON CEMENT LINED PIPE (CLASS 350) CONNECTION 1 FT ABOVE FINISHED GRADE WILL BE PROVIDED BY GENERAL CONTRACTOR.
6. FIRE CONTROL PANEL (FACP), SMOKE DETECTION, AND NOTIFICATION DEVICES TO BE INSTALLED BY OTHERS IN ACCORDANCE WITH NFPA 72.
7. WALL PENETRATION BY FIRE PROTECTION SYSTEM SHALL MAINTAIN FIRE RATING OF THE PENETRATED WALL PER ACCEPTED UL RATED SYSTEM.
8. WALL TYPE POST INDICATOR VALVE UPSTREAM OF SPRINKLER ALARM VALVE INSIDE THE BUILDING SHALL BE PROVIDED BY SPRINKLER SUBCONTRACTOR.

6" 4' 2' 0' 5' 10'

3/16" = 1'-0"

90% SUBMITTAL - NOT FOR CONSTRUCTION

NO.	BY	CHK	APP	DATE	REVISIONS AND RECORD OF USE
C	BAR	RWC		3/31/2020	90% SUBMITTAL
B	BAR	RWC		7/30/2019	60% SUBMITTAL
A	BAR	RWC		3/5/2019	30% SUBMITTAL

REGISTERED PROFESSIONAL ENGINEER
RANDY W. CANTRELL
No. M36207
MECHANICAL
STATE OF CALIFORNIA

BLACK & VEATCH

JOINT VENTURE

BLACK & VEATCH

FILANC

CITY OF MORRO BAY
MORRO BAY WRF
RECLAMATION FACILITY (WRF)

MAINTENANCE BUILDING
FIRE SUPPRESSION SYSTEM
PLAN

DESIGNED: TA
DETAILED: BAR
CHECKED: RWC
APPROVED: RWC
DATE: 3/31/2020

0 1/2 1

IF THIS BAR DOES NOT MEASURE 1" THEN DRAWING IS NOT TO FULL SCALE

PROJECT NO.
400530

96-F-101
SHEET
OF

PLOTTED: 3/26/2020 9:15:52 PM
D400530

ONE-LINE DIAGRAM LEGEND

1500KVA
2.4KV Δ-480Y/277V
3%Z, 60HZ
TRANSFORMER WITH PRIMARY AND SECONDARY VOLTAGE, AND KVA RATING AS NOTED

CS, 4#14,3/4", 20, 3P-60, 22:3#8,#10G, 4#14,2"
CIRCUIT NO.22 WITH #8 INSULATED CONDUCTORS AND 1#10 GROUND WIRE FOR A 20HP MOTOR WITH 3 POLE, 60A, MOTOR DISCONNECT SWITCH AND #14 INSULATED CONDUCTORS FOR AUXILIARY ITEM, AS FOR EXAMPLE A CONTROL STATION, ALL IN 2" CONDUIT.

AUXILIARY ITEMS MAY NOT BE COMPLETELY SHOWN
HS, 20, 3P-60, 22:3#8,#10G, 4#14,2"
CONDUCTORS FOR AUXILIARY ITEM SHALL NOT PASS THROUGH MOTOR DISCONNECT SWITCH.

AUXILIARY ITEMS MAY NOT BE COMPLETELY SHOWN
15
ONE-LINE SHOWING POWER AND CONTROL TO A PACKAGE UNIT, AS FOR EXAMPLE A STEAM GENERATOR OR AN AIR HANDLING UNIT, SHALL IMPLY THAT ANY AND ALL ASSOCIATED EQUIPMENT SHALL ALSO BE INSTALLED AND WIRED AS REQUIRED BY THE EQUIPMENT FURNISHED.

INDICATES THAT ALL OR PART OF CIRCUIT MAY BE ROUTED IN DUCT BANK OR UNDERGROUND. CONDUIT SIZE SHOWN ON ONE-LINE IS ABOVE GROUND AND/OR INSIDE OF STRUCTURE. SEE DUCT BANK SCHEDULE AND SECTIONS FOR CONDUIT SIZE OF UNDERGROUND PORTION OF CIRCUIT.

HIGH VOLTAGE DRAWOUT AIR OR VACUUM CIRCUIT BREAKER

3P-20
LOW VOLTAGE AIR CIRCUIT BREAKER, 3 POLE, 20 AMPERE

S4
SIZE 4 COMBINATION MAGNETIC MOTOR STARTER

LOW VOLTAGE DRAWOUT AIR CIRCUIT BREAKER

HIGH VOLTAGE DRAWOUT CONTACTOR

FUSE AND DISCONNECT SWITCH

S2
SIZE 2 COMBINATION MAGNETIC MOTOR STARTER, REVERSING OR 2 SPEED

S1
SIZE 1 COMBINATION REDUCED VOLTAGE AUTOTRANSFORMER

POTENTIAL TRANSFORMER

CURRENT TRANSFORMER

CURRENT OR POTENTIAL TEST SWITCH

G — GENERATOR

K — KIRK KEY INTERLOCK

E — ELECTRICAL INTERLOCK

R — RESISTOR

59G — PROTECTION RELAY WITH IEEE DEVICE FUNCTION AS SHOWN

V — SINGLE-FUNCTION METER

SURGE OR LIGHTNING ARRESTER

SURGE ARRESTER WITH SURGE CAPACITOR

GROUND CONNECTION

CABLE BUS

SCHEMATIC SYMBOLS

- WIRE CONNECTION POINT
- EXTERNAL CONNECTION POINT
- NORMALLY OPEN CONTACT
- NORMALLY CLOSED CONTACT
- STARTER, CONTACTOR OR RELAY COIL
- NORMALLY OPEN PUSH BUTTON
- NORMALLY CLOSED PUSH BUTTON
- MAINTAINED PUSH BUTTON
- NORMALLY CLOSED GEARED LIMIT SWITCH
- NORMALLY OPEN GEARED LIMIT SWITCH
- INDICATING LIGHT
- INDICATING LIGHT WITH PUSH-TO-TEST
- FUSE
- POTENTIOMETER
- CAPACITOR
- DIODE
- RESISTOR
- CONTROL POWER TRANSFORMER
- SWITCH
- MS — MANUAL STARTER
- OL — OVERLOAD
- OVERLOAD
- ELECTRODE
- FLOAT SWITCH (CLOSING ON RISING LEVEL)
- FLOAT SWITCH (OPENING ON RISING LEVEL)
- P — PRESSURE SWITCH (CLOSING ON RISING PRESSURE)
- P — PRESSURE SWITCH (OPENING ON RISING PRESSURE)
- V — VACUUM SWITCH (CLOSING ON INCREASING VACUUM)
- V — VACUUM SWITCH (OPENING ON INCREASING VACUUM)
- TEMPERATURE SWITCH (CLOSING ON RISING TEMPERATURE)
- TEMPERATURE SWITCH (OPENING ON RISING TEMPERATURE)
- FLOW ACTUATED SWITCH (CLOSING ON INCREASE IN FLOW)
- FLOW ACTUATED SWITCH (OPENING ON INCREASE IN FLOW)
- ON TIME DELAY CONTACT (NORMALLY OPEN, WHEN THE COIL IS ENERGIZED THE CONTACT WILL CLOSE AFTER A TIME DELAY)
- ON TIME DELAY CONTACT (NORMALLY CLOSED, WHEN THE COIL IS ENERGIZED THE CONTACT WILL OPEN AFTER A TIME DELAY)
- OFF TIME DELAY CONTACT (NORMALLY OPEN, WHEN THE COIL IS DE-ENERGIZED THE CONTACT WILL OPEN AFTER A TIME DELAY)
- OFF TIME DELAY CONTACT (NORMALLY CLOSED, WHEN THE COIL IS DE-ENERGIZED THE CONTACT WILL CLOSE AFTER A TIME DELAY)
- TORQUE SWITCH (NORMALLY OPEN)
- TORQUE SWITCH (NORMALLY CLOSED)
- LIMIT SWITCH (NORMALLY OPEN)
- LIMIT SWITCH (NORMALLY OPEN, HELD CLOSED)
- LIMIT SWITCH (NORMALLY CLOSED)
- LIMIT SWITCH (NORMALLY CLOSED, HELD OPEN)
- DIFFERENTIAL PRESSURE SWITCH (NORMALLY OPEN, CLOSING ON INCREASING DIFF.)
- DIFFERENTIAL PRESSURE SWITCH (NORMALLY CLOSED, OPENING ON INCREASING DIFF.)

SWITCH & OUTLET SYMBOLS

- S — SINGLE POLE SWITCH
- S_2 — TWO POLE SWITCH
- S_{3A} — THREE-WAY SWITCH CONTROLLING LIGHTS WITH "A" DESIGNATION
- S_4 — FOUR-WAY SWITCH
- S_M^{C1} — MOMENTARY SWITCH CONTROLLING CONTACTOR C1
- DUPLEX RECEPTACLE 120 VOLT
- SIMPLEX RECEPTACLE
- RANGE RECEPTACLE
- TWISTLOCK RECEPTACLE
- 30 — 240V, 1Ø RECEPTACLE, TYPICAL AMPERE RATING NOTED
- 60 — 480V, 3Ø WELDING RECEPTACLE, TYPICAL AMPERE RATING NOTED
- 120 VOLT DUPLEX RECEPTACLE (UPS)
- DUPLEX FLOOR OUTLET
- TELEPHONE OUTLET
- TELEPHONE FLOOR OUTLET
- CX — COAXIAL CABLE OUTLET
- DATA NETWORK OUTLET
- CAM TYPE RECEPTACLES
- CABLES WITH CAM TYPE PLUGS

MISCELLANEOUS SYMBOLS

- STROBE
- HORN & STROBE
- HORN
- T — THERMOSTAT
- J — JUNCTION BOX
- GROUND ROD
- GROUND ROD WITH TEST WELL
- GROUND CONNECTION
- DISCONNECT SWITCH
- COMBINATION STARTER
- POWER PANEL
- LIGHTING PANEL
- MISCELLANEOUS PANEL
- LIGHTING CONTACTOR
- CAMERA
- GLASS BREAK DETECTOR

BREAKER DETAILS

DETAIL A

52 — 5KV, 1200A, 49KA
A 5KV CLASS MEDIUM-VOLTAGE, DRAWOUT, VACUUM OR AIR INSULATED CIRCUIT BREAKER WITH A 1,200 AMPERE FRAME. BREAKER HAS A 49,000 AMPERE MAXIMUM FAULT CURRENT INTERRUPTING RATING.

DETAIL B

3P 50
A LOW VOLTAGE FIXED MOUNTED MOLDED CASE CIRCUIT BREAKER WITH A 50 AMPERE TRIP RATING.TRIP UNIT IS NON-ADJUSTABLE THERMAL-MAGNETIC TYPE.

1000AT, 1200AF, SST, LSIG, AFRD
A LOW VOLTAGE FIXED MOUNTED MOLDED CASE CIRCUIT BREAKER WITH A 1200 AMPERE FRAME AND A 1000 AMPERE TRIP RATING.
TRIP UNIT IS ADJUSTABLE SOLID-STATE TYPE WITH LONG-TIME, SHORT-TIME, INSTANTANEOUS, GROUND FAULT AND ARC-FLASH REDUCTION PROTECTION FEATURES.

DETAIL C

800AT, 1000AS, 1600AF, AFRD
A LOW VOLTAGE, DRAWOUT, POWER OR INSULATED CASE CIRCUIT BREAKER WITH A 1600A FRAME AND SOLID-STATE TRIP UNIT.
TRIP UNIT HAS A SENSOR MODULE RATED FOR 1000 AMPERES AND WITH A TRIP RATING OF 800 AMPERES AND ARC-FLASH REDUCTION PROTECTION FEATURES.

CONDUIT & WIRING INSTALLATION LEGEND

- CONDUIT EXPOSED
- CONDUIT CONCEALED
- CONDUIT TURNING UP. CONDUIT TURNING DOWN.
- CONDUIT PLUGGED FLUSH. CONDUIT CAPPED.
- L2 - 5 — TYPICAL FOR HOME RUN TO BE ROUTED TO LIGHTING PANEL L2 & CONNECTED TO CIRCUIT #5 (MINIMUM NO. 12 AWG CONDUCTORS AND 3/4" CONDUIT)
- A — LIGHTING FIXTURE. REFER TO NUMBER OR LETTER IN FIXTURE SCHEDULE
- 11 — LINEAR FIXTURE. REFER TO NUMBER OR LETTER IN FIXTURE SCHEDULE.
- LP1-3 — RECEPTACLE POWERED FROM LIGHTING PANEL LP1, CIRCUIT 3
- A LP2-2 — LIGHTING FIXTURE POWERED FROM LIGHTING PANEL LP2, CIRCUIT 2 (NON-SWITCHED)
- LPA-4 A / 11 — LIGHTING FIXTURE POWERED FROM LIGHTING PANEL LPA, CIRCUIT 4, VIA SWITCH A
- E — UNDERGROUND CONCRETE ENCASED ELECTRICAL DUCT BANK
- UNDERGROUND CONCRETE ENCASED ELECTRICAL BANK ROUTED BENEATH SLAB-ON-GRADE
- EE — DIRECT BURIED CONDUIT
- GROUND CONDUCTOR
- UE — UE — UNDERGROUND ELECTRIC
- OH — OH — OVERHEAD CIRCUIT

COMMUNICATION SYMBOLS

- HORN SPEAKER
- DUAL HORN SPEAKER
- WALL MOUNTED CONE SPEAKER
- SK — CEILING MOUNTED CONE SPEAKER

PROTECTION/RELAY DEVICE NUMBERS

25 - SYNCHRONIZING OR SYNCHRONISM-CHECK DEVICE
27 - UNDERVOLTAGE RELAY
32 - DIRECTIONAL POWER RELAY
37 - UNDERCURRENT OR UNDERPOWER RELAY
46 - REV. PHASE OR PHASE-BAL. CURRENT RELAY
47 - PHASE SEQ. OR PHASE BAL. VOLTAGE RELAY
49 - MACHINE OR TRANSFORMER THERMAL RELAY
50 - INSTANTANEOUS OVERCURRENT
51 - AC TIME OVERCURRENT RELAY
52 - AC CIRCUIT BREAKER
59 - OVERVOLTAGE RELAY
63 - PRESSURE SWITCH
64 - GROUND DETECTOR RELAY
67 - AC DIRECTIONAL OVERCURRENT RELAY
71 - LIQUID OR GAS LEVEL RELAY
81 - FREQUENCY RELAY
83 - AUTOMATIC SELECTIVE CONTROL OR TRANSFER RELAY
86 - LOCKOUT RELAY
87 - DIFFERENTIAL PROTECTIVE RELAY

CONTROL SCHEMATIC LEGEND

- PS — FIRE ALARM PULL STATION
- F — FIRE ALARM HORN/STROBE LIGHT
- F — FIRE ALARM BEACON
- S — FIRE ALARM STROBE LIGHT
- SD — FIRE ALARM SYSTEM SMOKE DETECTOR
- HT — FIRE ALARM SYSTEM HEAT SENSOR
- SFS — FIRE ALARM SYSTEM SPRINKLER FLOW SWITCH
- STS — FIRE ALARM SYSTEM SPRINKLER TAMPER SWITCH
- SPS — FIRE ALARM SYSTEM SPRINKLER PRESSURE SWITCH
- FACP — FIRE ALARM CONTROL PANEL
- FAAP — FIRE ALARM ANNUNCIATOR PANEL
- FATC# — FIRE ALARM TERMINAL CABINET
- DSD — FIRE ALARM SYSTEM DUCT SMOKE DETECTOR
- PIV — FIRE ALARM SYSTEM POST INDICATOR VALVE SWITCH
- PET — PHOTO ELECTRIC BEAM TRANSMITTER (SECURITY SYSTEM). ARROW INDICATES DIRECTION OF BEAM.
- PER — PHOTO ELECTRIC BEAM RECEIVER. (SECURITY SYSTEM). ARROW INDICATES DIRECTION OF BEAM.
- SSCP — SECURITY SYSTEM CONTROL PANEL
- MS — MOTION SENSOR
- CS — CONTACT SWITCH (DOOR)
- DS — DOOR SWITCH
- KC — CARD READER

NO.	BY	CHK	APP	DATE	REVISIONS AND RECORD OF USE
C	JSL	MAS	MJK	3/31/2020	90% SUBMITTAL
B	JSL	MJK	EVB	7/30/2019	60% SUBMITTAL
A	AM	MJK	EVB	3/5/2019	30% SUBMITTAL

No. E 17748

BLACK & VEATCH
JOINT VENTURE
BLACK & VEATCH
FILANC

CITY OF MORRO BAY
MORRO BAY WRF
RECLAMATION FACILITY (WRF)

GENERAL ELECTRICAL LEGENDS

DESIGNED: JSL
DETAILED: SBC
CHECKED: MAS
APPROVED: MJK
DATE: 3/31/2020

0 1/2 1
IF THIS BAR DOES NOT MEASURE 1" THEM DRAWING IS NOT TO FULL SCALE

PROJECT NO.
400530

00-E-001
SHEET
OF

90% SUBMITTAL - NOT FOR CONSTRUCTION

F0900A
D400530
PLOTTED: 3/27/2020 7:42 AM FILE: C:\PWBatchPDF\Process\400530 - Morro Bay WRF\400530-00-E-001.dwg

ELECTRICAL GENERAL NOTES

1. SOLID LINES (————————) INDICATE NEW WORK OR EQUIPMENT.
2. SCREENED LINES (————————) INDICATE EXISTING WORK OR EQUIPMENT.
3. DASHED LINES (- - - - - - - -) INDICATE FUTURE WORK OR EQUIPMENT.
4. REFER TO INDIVIDUAL DISCIPLINE CONTRACT DRAWINGS FOR ADDITIONAL ABBREVIATIONS, DETAILS, AND GENERAL DESIGN NOTES.
5. LEGEND SHEETS ARE GENERAL. SOME SYMBOLS AND ABBREVIATIONS MAY NOT BE UTILIZED ON THIS SPECIFIC PROJECT.
6. INFORMATION RELATED TO CIRCUIT IDENTIFICATION, WIRE & CONDUIT SIZES, AND ROUTING, IS ON THE FOLLOWING DRAWING TYPES.
   - A. ONE-LINE DIAGRAMS SHOW CIRCUIT IDENTIFICATION, WIRE QUANTITY AND SIZES, AND CONDUIT SIZE WITHIN STRUCTURES. ONE-LINE DIAGRAMS ALSO INDICATE ORIGIN AND DESTINATION OF CIRCUITS, AND IDENTIFY CIRCUITS ROUTED UNDERGROUND.
   - B. FOR CIRCUITS WITHOUT UNDERGROUND PORTIONS, BUILDING FLOOR PLANS SHOW LOCATION OF EQUIPMENT FOR DETERMINING CIRCUIT LENGTH WITHIN THE STRUCTURE. FOR CIRCUITS WITH UNDERGROUND PORTIONS, ANTICIPATED PENETRATION OF UNDERGROUND CONDUITS ARE SHOWN ON STRUCTURE PLANS FOR DETERMINING THE LENGTH OF THE IN-STRUCTURE PORTIONS OF CIRCUITS. BUILDING FLOOR PLANS MAY ALSO SHOW HOME RUNS FOR LIGHTING, RECEPTACLE, AND OTHER MISCELLANEOUS EQUIPMENT CIRCUITS.
   - C. SITE PLANS INDICATE THE GENERAL ROUTING OF UNDERGROUND CONDUITS AND DUCT BANKS. CIRCUITS ROUTED IN UNDERGROUND CONDUITS OR DUCT BANKS ARE INDICATED IN DUCT BANK SECTIONS REFERENCED ON THE SITE PLAN.
   - D. DUCT BANK SECTIONS AND SCHEDULES IDENTIFY CONDUIT SIZE, CONDUIT MATERIAL, ARRANGEMENT OF THE UNDERGROUND CONDUITS, AND CIRCUITS ROUTED IN EACH UNDERGROUND CONDUIT.

AREA DESIGNATIONS

THE SPECIAL AREA DESIGNATION BOXES, AS DEFINED BELOW, ARE LOCATED ON THE PLAN DRAWINGS TO DEFINE ELECTRICAL INSTALLATION REQUIREMENTS. DESIGNATION BOXES ARE LOCATED WITHIN ROOM OR BELOW ROOM NUMBER. ALL INDOOR AREAS NOT INDICATED OTHERWISE ARE AREA TYPE 1 AND MINIMUM NEMA TYPE 1 ENCLOSURES.

NEMA 3R	INTENDED FOR OUTDOOR USE, PROVIDES A DEGREE OF PROTECTION AGAINST FALLING RAIN AND ICE FORMATION. MEETS ROD ENTRY, RAIN, EXTERNAL ICING AND RUST RESISTANCE DESIGN TESTS.
NEMA 4X	CORROSIVE CHEMICAL FEED AND STORAGE ROOMS. CONDUIT SYSTEM SHALL BE EXPOSED SCHEDULE 80 PVC RIGID NON-METALLIC CONDUIT WITH PVC FITTINGS, BOXES AND ACCESSORIES.
NEMA 4	INDOOR WET LOCATIONS SUCH AS VAULTS, HOSEDOWN AREAS, BASEMENTS, ETC. MINIMUM NEMA TYPE 4 ENCLOSURE FOR EQUIPMENT AND GASKETED FITTINGS IN A CONDUIT SYSTEM.
NEMA 7A	CLASS I, DIVISION 1 AREA AS DEFINED BY NEC. ALL EQUIPMENT AND CONDUIT SYSTEMS SHALL BE RATED FOR USE IN THIS AREA.
NEMA 7B	CLASS I, DIVISION 2, GROUP C AND D (METHANE, GASOLINE) AS DEFINED BY NEC. EQUIPMENT AND CONDUITS SYSTEMS SHALL BE RATED FOR USE IN THIS AREA.
NEMA 12	INDOOR, DRY, DIRTY AREA. REQUIRES MINIMUM NEMA TYPE 12 GASKETED ENCLOSURES FOR ALL EQUIPMENT AND GASKETED FITTINGS IN CONDUIT SYSTEMS.

GENERAL REQUIREMENTS

1. THE SUBCONTRACTOR SHALL BE RESPONSIBLE FOR ROUTING ALL CONDUITS NOT SHOWN ON THE PLANS. THIS SHALL INCLUDE ALL CONDUITS SHOWN ON THE ONE-LINES AND HOME-RUNS SHOWN ON THE PLAN DRAWINGS. CONDUITS SHALL BE ROUTED AS DEFINED IN THE SPECIFICATION. CONDUITS SHALL BE PROVIDED BETWEEN THE CABLE TRAYS AND THE EQUIPMENT.
2. SPARE WIRES SHALL BE TAPED AND COILED AND LABELED TO INDICATE WHERE OTHER END OF SPARE WIRE IS LOCATED.
3. IF EQUIPMENT SUPPLIED BY MANUFACTURER HAS A LARGER LOAD THAN VALUE SHOWN, THE SUBCONTRACTOR SHALL ENLARGE THE CABLE CONDUIT AND ELECTRICAL EQUIPMENT, AS REQUIRED, TO ACCOMMODATE THE HIGHER VALUE.
4. THE SUBCONTRACTOR SHALL BE RESPONSIBLE FOR FURNISHING PROPERLY SIZED STARTER OVERLOADS FOR EQUIPMENT FURNISHED.
5. LIGHTING AND RECEPTACLE CIRCUITS DESIGNATED ON THE FLOOR PLANS ARE NOT SHOWN ON THE ONE-LINES. CONDUCTORS FOR LIGHTING, RECEPTACLES, AND MISCELLANEOUS 120VAC CIRCUITS SHALL BE MINIMUM NO. 12AWG. CONDUIT FOR LIGHTING, RECEPTACLES, AND MISCELLANEOUS 120VAC CIRCUITS SHALL BE MINIMUM 3/4".
6. IN AREAS WHERE THERE ARE OVERHEAD BRIDGE CRANES, HOISTS, ETC. NO CONDUITS SHALL BE RUN OVERHEAD THAT WILL INTERFERE WITH THE OPERATION OF THE EQUIPMENT.
7. THE SUBCONTRACTOR SHALL BE RESPONSIBLE FOR COORDINATING WITH OTHER SUBCONTRACTORS AND WITH THE EQUIPMENT FOR THE FINAL DUCKBANK CONDUIT STUBUP LOCATIONS.

ELECTRICAL ABBREVIATIONS

A

A	AMBER, AMPERE, ALARM
AC	ALTERNATING CURRENT
ACB	AIR CIRCUIT BREAKER
ACR	ACCESS CARD READER
AF	AMPERE FRAME
AFD	ADJUSTABLE FREQUENCY DRIVE
AFRD	ARC-FLASH REDUCTION DEVICE
AM	AMMETER
ANN	ANNUNCIATOR
AR	ALARM RELAY
AS	AMMETER SWITCH, AMPERE SENSOR
AT	AMPERE TRIP
ATS	AUTOMATIC TRANSFER SWITCH
AUX	AUXILIARY
AWG	AMERICAN WIRE GAUGE

B

B	BUS
BC	BATTERY CHARGER
BKR	BREAKER
BR	BRAKE
BT	BEARING TEMPERATURE

C

C	CLOSE, COUNTER, CONTACTOR, CONTROL, CCTV CAMERA
CAP	CAPACITOR
CB	CIRCUIT BREAKER
CB"A"	CIRCUIT BREAKER AUXILIARY CONTACT (OPEN WHEN BREAKER IS OPEN)
CB"B"	CIRCUIT BREAKER AUXILIARY CONTACT (CLOSED WHEN BREAKER IS OPEN)
CD	CONTROL DAMPER
CHH	CONTROL HANDHOLE
CI	CELL INTERLOCK
CKT	CIRCUIT
CL2	CHLORINE
CMH	CONTROL MANHOLE
COS	CABLE OPERATED SWITCH
CP	CONTROL PANEL
CPT	CONTROL POWER TRANSFORMER
CR	CURRENT OF CONTROL RELAY, CARD READER
CS	CONTROL STATION
CT	CYCLE TIMER OR CURRENT TRANSFORMER
CTC	CYCLE TIMER CLUTCH
CTM	CYCLE TIMER MONITOR
2/C	2 CONDUCTOR
4"C	4" CONDUIT

D

DC	DIRECT CURRENT, DOOR CONTACT
DI	DOOR INTERLOCK
DM	DAMPER MOTOR, DEMAND METER, DIMMER SWITCH
DPDT	DOUBLE POLE DOUBLE THROW
DPST	DOUBLE POLE SINGLE THROW
DPR	DIFFERENTIAL PRESSURE REGULATOR
DPS	DIFFERENTIAL PRESSURE SWITCH
DS	DISCONNECT SWITCH, DOOR SWITCH, DESKTOP STATION
DVLS	DISCHARGE VALVE LIMIT SWITCH

E

E	ELECTRIC OPERATOR FOR CONTROL DAMPER OR VALVE
EC	EMPTY CONDUIT
EDS	ELECTRICAL DOOR STRIKE
EG	ENGINE GENERATOR
EGCP	ENGINE GENERATOR CONTROL PANEL
EL	ELEVATION, EMERGENCY LIGHT
EMH	ELECTRICAL MANHOLE
ER	ELECTRODE RELAY
ES	END SWITCH, REQUEST TO EXIT SENSOR
E-STOP	EMERGENCY STOP
ETM	ELAPSED TIME METER
EX	EXISTING
EXP	EXPLOSION PROOF

F

F	FORWARD, FIELD
FO	FIBER OPTIC
FPR	FEEDER PROTECTION RELAY
FS	FLOW SWITCH

G

G	GREEN, GROUND, GENERATOR, GROUND FAULT
GAC	GRANULAR ACTIVE CARBON
GD	GROUND DETECTOR
GEN	GENERATOR
GFI	GROUND FAULT INTERRUPTOR
GLS	GEARED LIMIT SWITCH
GPR	GENERATOR PROTECTION RELAY
GND	GROUND
#8G	#8 GROUND WIRE

H

H	HIGH, HUMIDISTAT
HH	HANDHOLE
HMT	HIGH MOTOR TEMPERATURE
HOA	HAND-OFF-AUTO
HOR	HAND-OFF-REMOTE
HP	HORSEPOWER
HS	HAND STATION
HWCO	HIGH WATER CUTOFF
HZ	HERTZ (CYCLE)

I

I/O	INPUT/OUTPUT
I	INSTANTANEOUS
IJB	INTERCOM JUNCTION BOX

J

J,JB	JUNCTION BOX

K

K	KEY INTERLOCK
KAIC	THOUSAND AMPERES INTERRUPTING CURRENT
KCMIL	THOUSAND CIRCULAR MIL
KO	KEY OPERATED
KV	KILOVOLT
KVA	KILOVOLT AMPERE
KVAR	KILOVAR
KW	KILOWATT
KWH	KILOWATT HOUR

L

L	LOW, LEVEL, LONG-TIME
LA	LIGHTNING ARRESTER
LAN	LOCAL AREA NETWORK
LC	LIGHTING CONTACTOR
LCP	LOCAL CONTROL PANEL
LCS	LOCAL CONTROL STATION
LOA	LOCAL-OFF-AUTO
LOR	LOCAL-OFF-REMOTE
LOS	LOCK OUT STOP
LP	LIGHTING PANEL
LS	LIMIT OR LEVEL SWITCH
LTG	LIGHTING
LVHH	LOW VOLTAGE HANDHOLE
LVMH	LOW VOLTAGE MANHOLE
LWCO	LOW WATER CUTOFF

M

M	MAGNETIC MOTOR STARTER
MA	MILLIAMPERE
MCB	MAIN CIRCUIT BREAKER
MCC	MOTOR CONTROL CENTER
MCLU	MOTOR CONTROL LINEUP
MD	MOISTURE DETECTOR, MOTION DETECTOR
MDL	MAGNETIC DOOR LOCK
MFR	MANUFACTURER
MH	MANHOLE, MOUNTING HEIGHT
MOV	MOTOR OPERATED VALVE
MPR	MOTOR PROTECTION RELAY
MS	MANUAL MOTOR STARTER
MSH	MOISTURE SWITCH HIGH
MTS	MANUAL TRANSFER SWITCH
MV	MILLIVOLT, MEDIUM VOLTAGE
MVA	MEGAVOLT AMPERE
MVHH	MEDIUM VOLTAGE HANDHOLE

N

N	NEUTRAL
NGR	NEUTRAL GROUNDING RESISTOR
NGT	NEUTRAL GROUNDING TRANSFORMER
NC	NORMALLY CLOSED
NO	NORMALLY OPEN, NUMBER

O

O	OPEN
OL	OVERLOAD
OOA	ON-OFF-AUTO
OOR	ON-OFF-REMOTE
O/U	OVER/UNDER

P

P	PRIMARY, POWER, POLE
PCS	PLANT CONTROL SYSTEM
PB	PUSH BUTTON, PULL BOX
PF	POWER FACTOR
PFCC	POWER FACTOR CORRECTION CAPACITOR
PH	PHASE
PL	PILOT LIGHT
PLC	PROGRAMMABLE LOGIC CONTROLLER
PP	POWER PANEL
PR	PAIR
PRS	PROXIMITY SWITCH
PS	PRESSURE SWITCH
PT	POTENTIAL TRANSFORMER, PROGRAM TIMER

Q

	NOT USED

R

R	RED, RAISE, RELAY, REVERSE
RECP	RECEPTACLE
RES	RESISTOR
RH	REMOTE HANDSET
RT	REPEATING TIMER
RTD	RESISTANCE TEMPERATURE DETECTOR
RTU	REMOTE TERMINAL UNIT
RVSS	REDUCED VOLTAGE SOLID STATE STARTER
ROSS	RO SYSTEM SUPPLIER

S

S	SHORT-TIME, SHIELDED, STARTER
SA	SURGE ARRESTER, SPEAKER AMPLIFIER
SCADA	SUPERVISORY CONTROL AND DATA ACQUISITION
SF6	SULFUR HEXAFLOURIDE
SH	SPACE HEATER
SN	SOLID NEUTRAL
SO	SOLENOID OILER
SP	SINGLE POLE
SPD	SURGE PROTECTION DEVICE
SPDT	SINGLE POLE DOUBLE THROW
SPST	SINGLE POLE SINGLE THROW
SS	SELECTOR SWITCH, START/STOP
SSM	SOLID-STATE METERING
SSS	SOLID STATE STARTER
SST	SOLID-STATE TRIP
SUPV	SUPERVISORY CONTROL
SV	SOLENOID VALVE
SWB,SWBD	SWITCHBOARD
SWG,SWGR	SWITCHGEAR

T

T	THERMOSTAT, TIMER, TOTALIZER, TRANSFORMER
TACH	TACHOMETER
TB	TERMINAL BLOCK
TC	TIMER CLUTCH
TD	TIME DELAY RELAY
TEMP	TEMPERATURE
TM	TIMER MOTOR
TQ	TORQUE
TR	TIMER RELAY, TRIAD
TSH	TEMPERATURE SWITCH HIGH
TTB	TELEPHONE TERMINAL BOARD

U

UG	UNDERGROUND
UPS	UNINTERRUPTIBLE POWER SUPPLY
UTS	UP TO SPEED

V

V	VOLTS, VOLTAGE RESTRAINED
VA	VOLT AMPERE
VAR	VARMETER
VFD	VARIABLE FREQUENCY DRIVE
VI	VACUUM INTERRUPTER
VLS	VALVE LIMIT SWITCH
VM	VOLTMETER
VPI	VALVE POSITION INDICATOR
VS	VOLTMETER SWITCH

W

W	WHITE, WATTS
WH	WATTHOUR METER
WM	WATT METER
WP	WEATHERPROOF
WPI	WEATHERPROOF IN-USE
WS	WALL STATION

X

X	AUXILIARY RELAY
XFMR	TRANSFORMER
XP	EXPLOSION PROOF

Y

Y	YELLOW

Z

Z	AUXILIARY RELAY, IMPEDANCE
ZS	POSITION SWITCH
ZSS	ZERO SPEED SWITCH

1-1PR#16S	ONE, SINGLE PAIR, TWISTED SHIELDED #16 CABLE
3-7/C#14	THREE, SINGLE, SEVEN CONDUCTOR #14 MULTICONDUCTOR CONTROL CABLES
1-1TR#16S	ONE, TRIAD, TWISTED SHIELDED #16 CABLE

NO.	BY	CHK	APP	DATE	REVISIONS AND RECORD OF USE
C	JSL	MAS	MJK	3/31/2020	90% SUBMITTAL
B	JSL	MJK	EVB	7/30/2019	60% SUBMITTAL
A	AM	MJK	EVB	3/5/2019	30% SUBMITTAL

No. E 17748

BLACK & VEATCH

JOINT VENTURE

BLACK & VEATCH

FILANC

CITY OF MORRO BAY
MORRO BAY WRF
RECLAMATION FACILITY (WRF)

GENERAL
ELECTRICAL
ABBREVIATION AND GENERAL NOTES

DESIGNED: JSL
DETAILED: SBC
CHECKED: MAS
APPROVED: MJK
DATE: 3/31/2020

0 1/2 1
IF THIS BAR DOES NOT MEASURE 1" THEN DRAWING IS NOT TO FULL SCALE

PROJECT NO.
400530

00-E-002
SHEET
OF

90% SUBMITTAL - NOT FOR CONSTRUCTION

FD9000A
D400330
PLOTTED: 3/27/2020 7:43 AM FILE: C:\PWBatchPDF\Process\400530 - Morro Bay WRF\400530-00-E-002.dwg

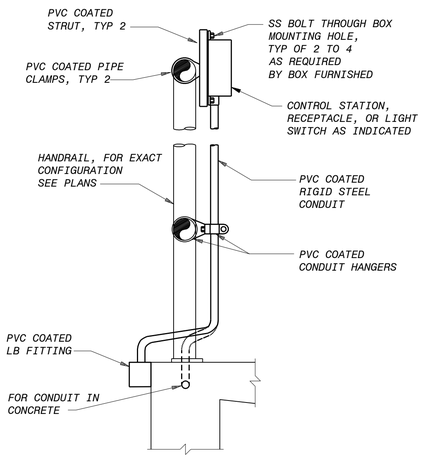

TYPICAL HANDRAIL MOUNTING DETAIL
NO SCALE

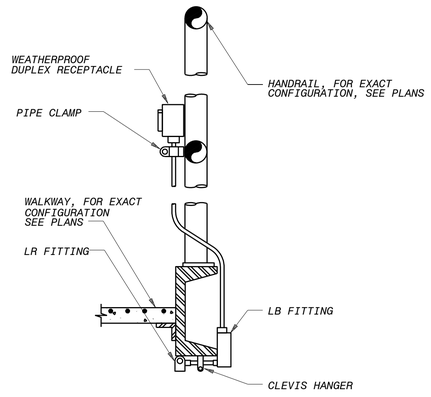

TYPICAL RECEPTACLE MOUNTING AT METAL WALKWAY DETAIL
NO SCALE

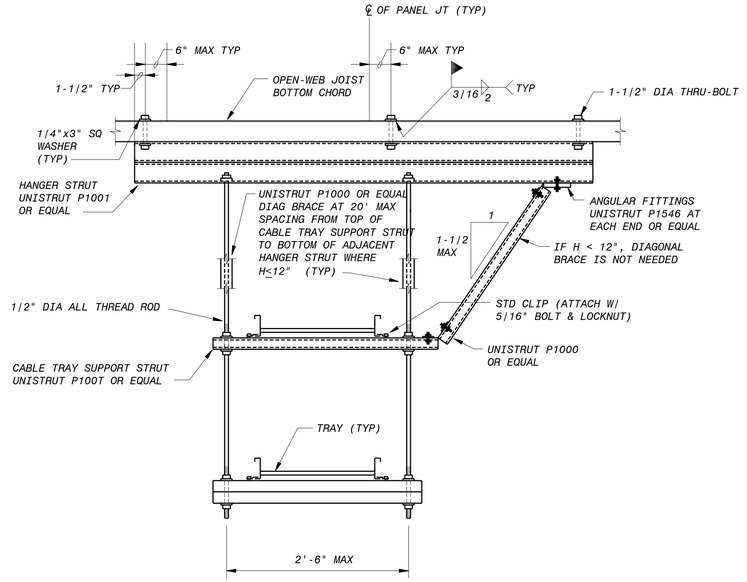

METAL FRAMING CHANNEL TRAY SUPPORT
NO SCALE

NOTES:

1. SEE DRAWINGS 00-E-001 AND 00-E-002 FOR ELECTRICAL LEGEND, ABBREVIATIONS AND NOTES.

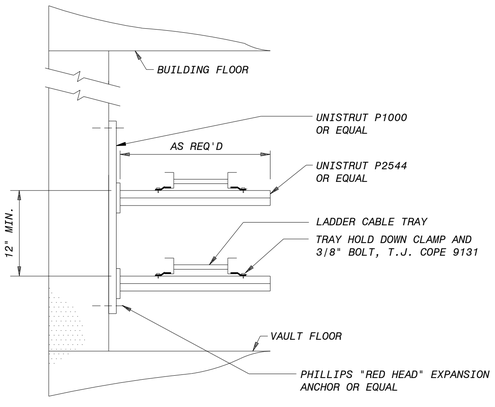

TRAY WALL SUPPORT DETAIL
NO SCALE

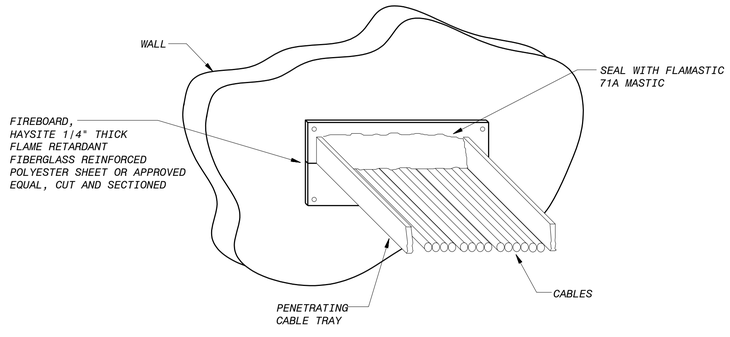

TYPICAL CABLE TRAY PENETRATION FIRE BARRIER
NO SCALE

90% SUBMITTAL - NOT FOR CONSTRUCTION

NO.	BY	CHK	APP
B	JSL	MAS	MJK
A	JSL	MJK	EVB

DATE	REVISIONS AND RECORD OF USE
3/31/2020	90% SUBMITTAL
7/30/2019	60% SUBMITTAL

No. E 17748

BLACK & VEATCH
JOINT VENTURE
FILANC
BLACK & VEATCH

CITY OF MORRO BAY
MORRO BAY WRF
RECLAMATION FACILITY (WRF)

GENERAL ELECTRICAL INSTALLATION DETAILS

DESIGNED: JSL
DETAILED: SBC
CHECKED: MAS
APPROVED: MJK
DATE: 3/31/2020

0 1/2 1
IF THIS BAR DOES NOT MEASURE 1" THEN DRAWING IS NOT TO FULL SCALE

PROJECT NO. 400530

00-E-501
SHEET
OF

FD9000A
D400530
PLOTTED: 3/27/2020 7:43 AM FILE: C:\PWBatchPDF\Process\400530 - Morro Bay WRF\400530-00-E-501.dwg

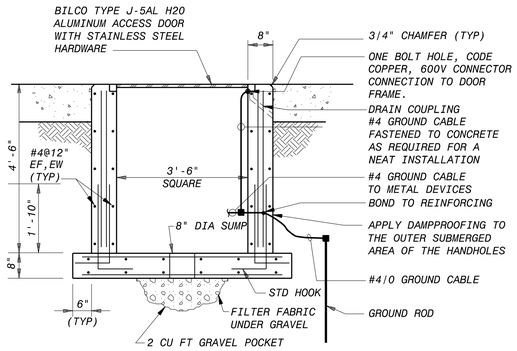

TYPICAL TRAFFIC RATED ELECTRICAL HANDHOLE DETAIL

NO SCALE

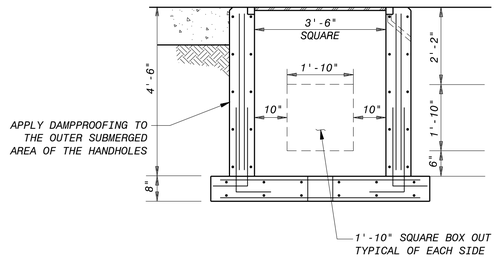

TRAFFIC RATED HANDHOLE DUCTBANK BOX OUT LOCATION DETAIL

NO SCALE

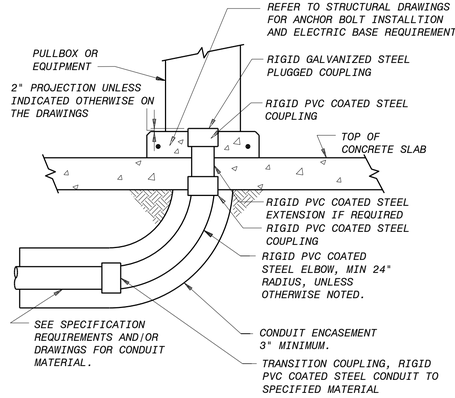

TYPICAL CONDUIT RISER TERMINATING IN CONCRETE SLAB WITH EQUIPMENT BASE

NO SCALE

NOTE:

1. SEE DRAWINGS 00-E-001 AND 00-E-002 FOR ELECTRICAL LEGEND, ABBREVIATIONS AND NOTES.

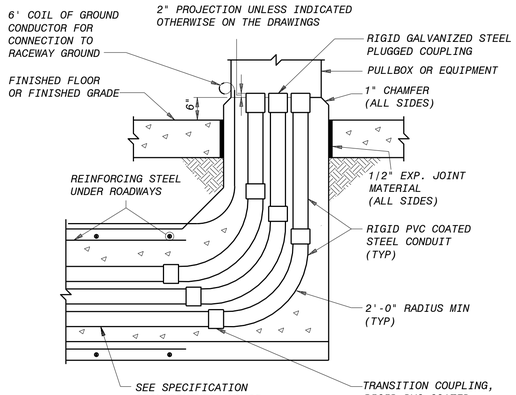

TYPICAL DUCT BANK RISER CONSTRUCTION

NO SCALE

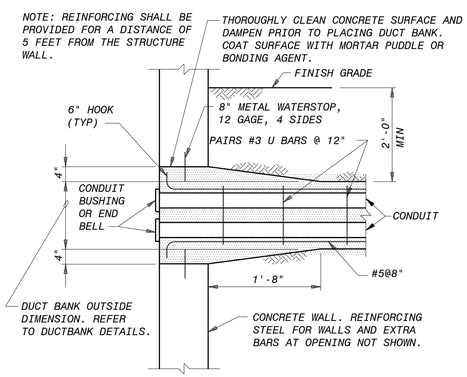

TYPICAL UNDERGROUND DUCT BANK ENTRANCE DETAIL

NO SCALE

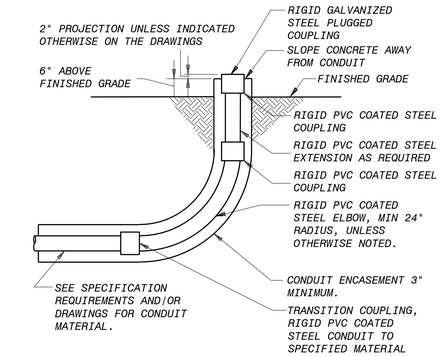

TYPICAL CONDUIT RISER TERMINATING IN SOIL

NO SCALE

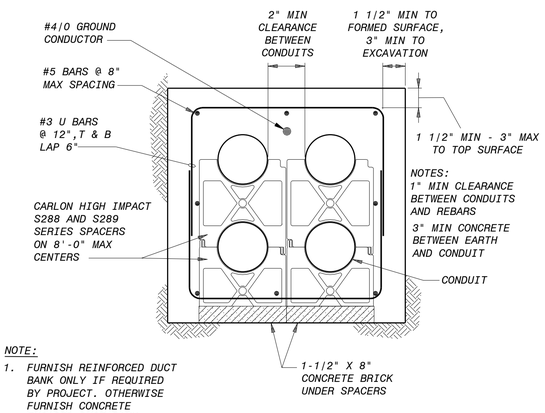

TYPICAL REINFORCED DUCT BANK SECTION

NO SCALE

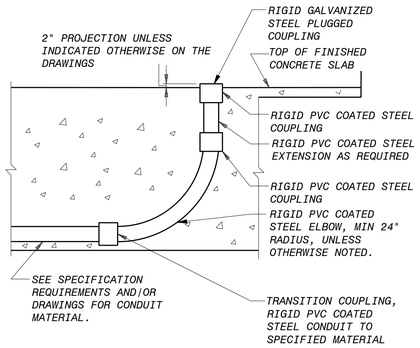

TYPICAL EMBEDDED CONDUIT RISER TERMINATING IN FOUNDATION

NO SCALE

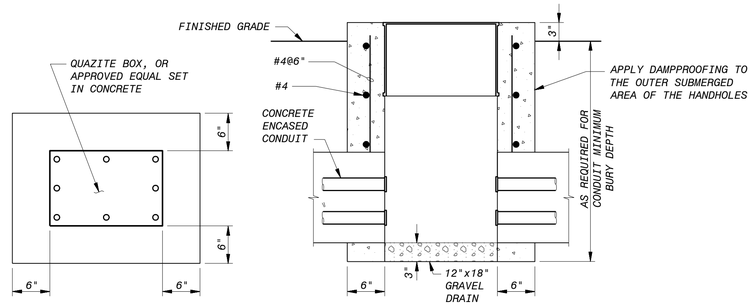

TYPICAL UNDERGROUND (UG) PULL BOX DETAIL

NO SCALE

90% SUBMITTAL - NOT FOR CONSTRUCTION

NO.	BY	CHK	APP	DATE	REVISIONS AND RECORD OF USE
B	JSL	MAS	MJK	3/31/2020	90% SUBMITTAL
A	JSL	MJK	EVB	7/30/2019	60% SUBMITTAL

BLACK & VEATCH JOINT VENTURE — BLACK & VEATCH — FILANC

CITY OF MORRO BAY
MORRO BAY WRF
RECLAMATION FACILITY (WRF)

GENERAL
ELECTRICAL
INSTALLATION DETAILS

DESIGNED: JSL
DETAILED: SBC
CHECKED: MAS
APPROVED: MJK
DATE: 3/31/2020

0 1/2 1
IF THIS BAR DOES NOT MEASURE 1" THEN DRAWING IS NOT TO FULL SCALE

PROJECT NO. 400530

00-E-502
SHEET
OF

FD9000A
D400530
PLOTTED: 3/27/2020 7:43 AM FILE: C:\PWBatchPDF\Process\400530 - Morro Bay WRF\400530-00-E-502.dwg

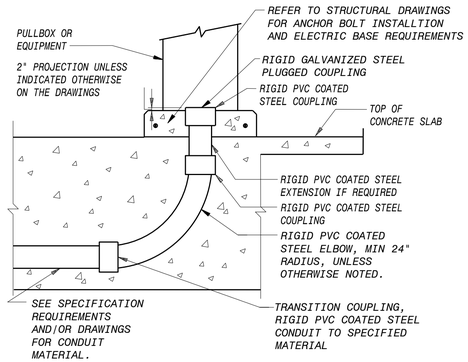

TYPICAL EMBEDDED CONDUIT RISER TERMINATING IN FOUNDATION WITH EQUIPMENT BASE

NO SCALE

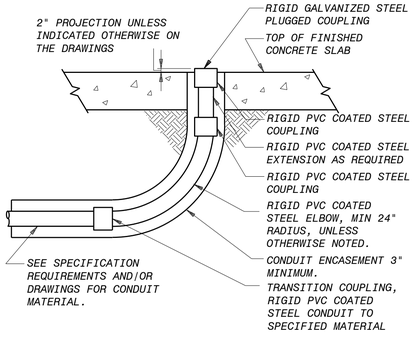

TYPICAL CONDUIT RISER TERMINATING IN CONCRETE SLAB

NO SCALE

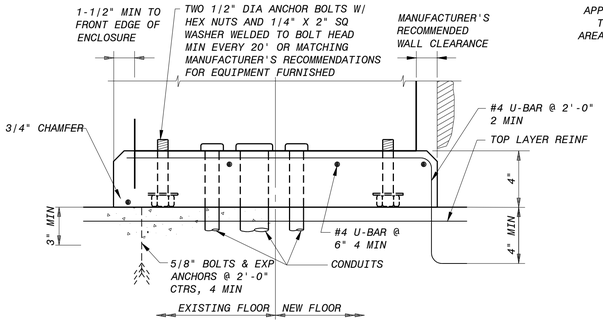

ELECTRICAL EQUIPMENT BASE

NO SCALE

NOTE: UNLESS OTHERWISE NOTED, ALL INDOOR FLOOR-MOUNTED ELECTRICAL EQUIPMENT, INCLUDING SWITCHGEAR, SWITCHBOARDS, MOTOR CONTROL CENTERS, ADJUSTABLE FREQUENCY DRIVES, INSTRUMENT CABINETS, ETC., SHALL BE PROVIDED WITH EQUIPMENT BASES.

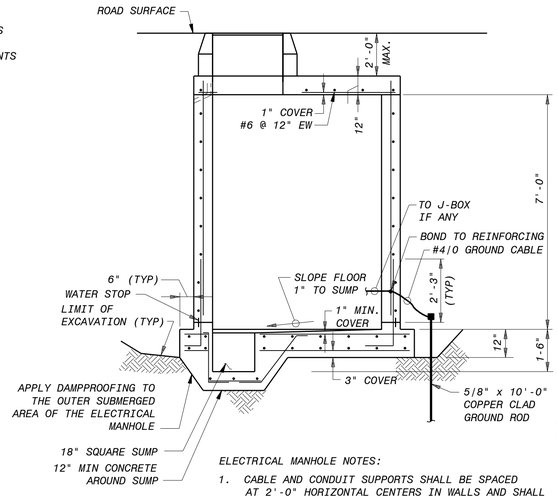

ELECTRICAL MANHOLE NOTES:

1. CABLE AND CONDUIT SUPPORTS SHALL BE SPACED AT 2'-0" HORIZONTAL CENTERS IN WALLS AND SHALL BEGIN 2'-0" FROM FLOOR.
2. SUPPORTS IN CEILINGS SHALL RUN FROM WALL TO WALL.
3. OPENING SHALL BE PROVIDED IN MANHOLE WALLS FOR CONDUIT BANK ENTRANCE AS REQUIRED.
4. ALL REINFORCING ON THIS DETAIL SHALL BE #6@12" UNLESS NOTED OTHERWISE. CENTER VERTICAL REINFORCING IN THE WALLS.
5. CONCRETE TO BE ROUGH AND CLEAN AT CONSTRUCTION JOINT FACES.

TRAFFIC RATED ELECTRICAL MANHOLE SECTION (2)

NO SCALE SUITABLE FOR ROADWAY LOCATIONS

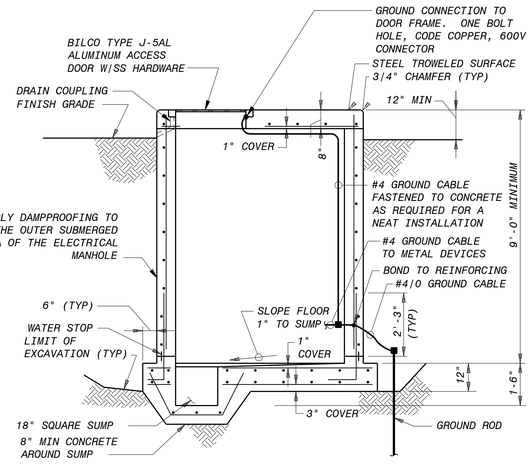

ELECTRICAL MANHOLE NOTES:

1. CABLE AND CONDUIT SUPPORTS SHALL BE SPACED AT 2'-0" HORIZONTAL CENTERS IN WALLS AND SHALL BEGIN 2'-0" FROM FLOOR.
2. SUPPORTS IN CEILINGS SHALL RUN FROM WALL TO WALL.
3. OPENING SHALL BE PROVIDED IN MANHOLE WALLS FOR CONDUIT BANK ENTRANCE AS REQUIRED.
4. ALL REINFORCING ON THIS DETAIL SHALL BE #5@12" ON CENTER UNLESS NOTED OTHERWISE. CENTER VERTICAL REINFORCING IN THE WALLS.
5. CONCRETE TO BE ROUGH AND CLEAN AT CONSTRUCTION JOINT FACES.

ELECTRICAL MANHOLE SECTION (1)

NO SCALE NOT SUITABLE FOR ROADWAY LOCATIONS

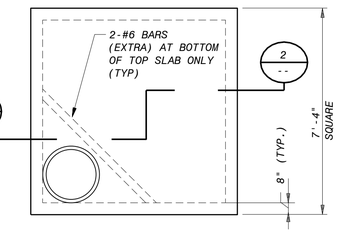

TYPICAL TRAFFIC RATED ELECTRICAL MANHOLE

NO SCALE SUITABLE FOR ROADWAY LOCATIONS

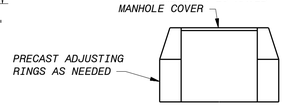

MANHOLE COVER

NO SCALE

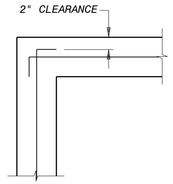

CORNER REINFORCING PLAN

NO SCALE

NOTE: 10% OF LENGTH PLUS 3'

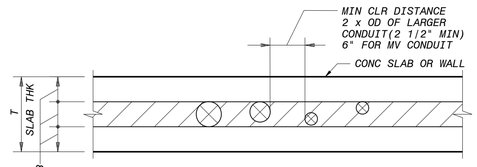

CONDUIT PLACING DETAIL

NO SCALE

NOTES:

1. PLACE CONDUIT ONLY IN SHADED AREA
2. FOR CONDUIT REQUIREMENTS SEE THE ELECTRICAL DRAWINGS AND SPECIFICATIONS.

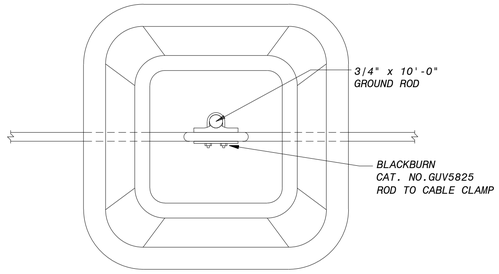

PLAN

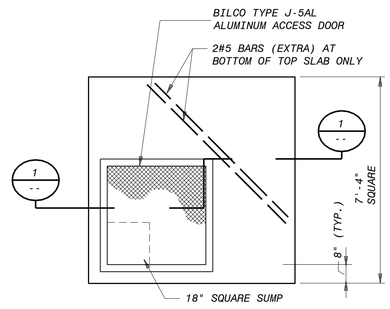

TYPICAL ELECTRICAL MANHOLE (SINGLE CHAMBER)

NO SCALE NOT SUITABLE FOR ROADWAY LOCATIONS

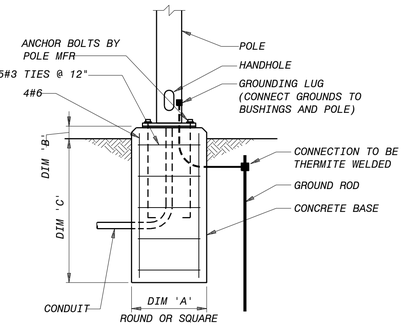

TYPICAL POLE MOUNTING DETAIL

NO SCALE

A	B	C	POLE LENGTH
1'-0"	2"	SEE NOTE	10' TO 12'
1'-6"	2"		12' TO 20'

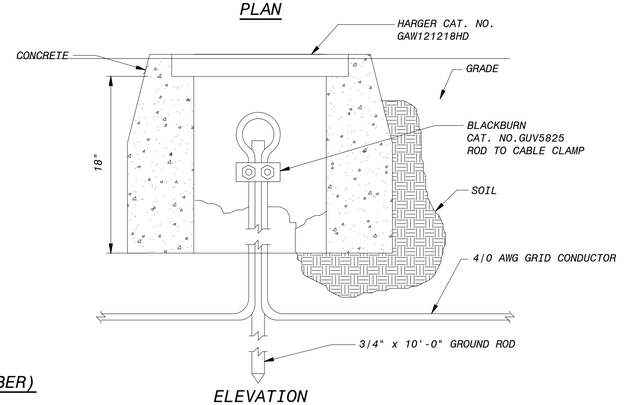

ELEVATION

TYPICAL GROUND TEST STATION

NO SCALE

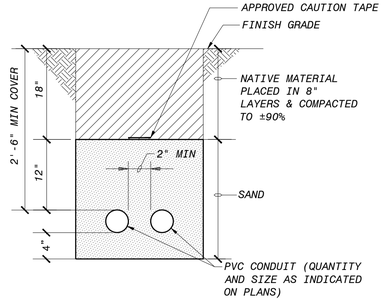

TYPICAL DIRECT BURIED CONDUIT SECTION

NO SCALE

NOTE:

1. SEE DRAWINGS 00-E-001 AND 00-E-002 FOR ELECTRICAL LEGEND, ABBREVIATIONS AND NOTES.

90% SUBMITTAL - NOT FOR CONSTRUCTION

NO.	BY	CHK	APP	DATE	REVISIONS AND RECORD OF USE
B	JSL	MAS	MJK	3/31/2020	90% SUBMITTAL
A	JSL	MJK	EVB	7/30/2019	60% SUBMITTAL

No. E 17748

BLACK & VEATCH
JOINT VENTURE
BLACK & VEATCH
FILANC

CITY OF MORRO BAY
MORRO BAY WRF
RECLAMATION FACILITY (WRF)

GENERAL
ELECTRICAL
INSTALLATION DETAILS

DESIGNED: JSL
DETAILED: SBC
CHECKED: MAS
APPROVED: MJK
DATE: 3/31/2020

0 1/2 1
IF THIS BAR DOES NOT MEASURE 1" THEN DRAWING IS NOT TO FULL SCALE

PROJECT NO.
400530

00-E-503
SHEET
OF

F09000A
D400530
PLOTTED: 3/27/2020 7:44 AM FILE: C:\PWBatchPDF\Process\400530 - Morro Bay WRF\400530-00-E-503.dwg

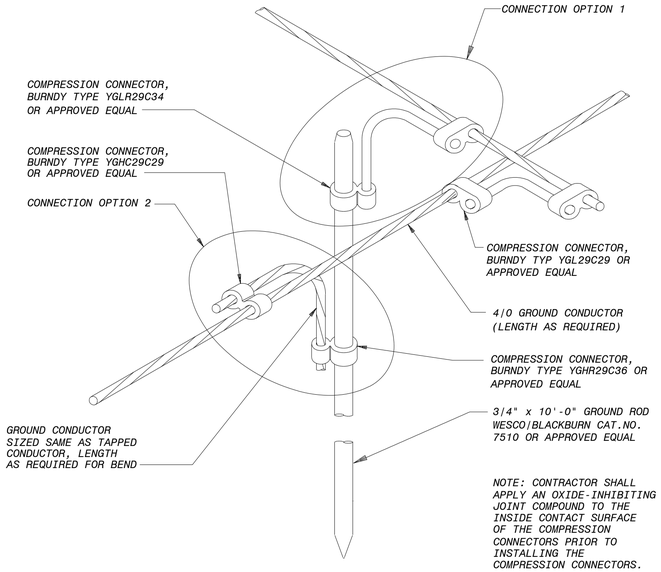

TYPICAL COMPRESSION FITTING GROUND ROD TO CONNECTION AT CROSS OR TEE

(TWO CONNECTION OPTIONS SHOWN)
NO SCALE

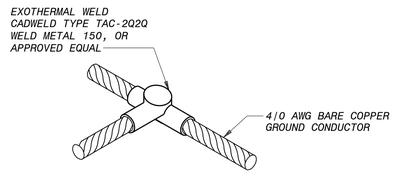

TYPICAL EXOTHERMAL WELD TEE CONNECTION

NO SCALE

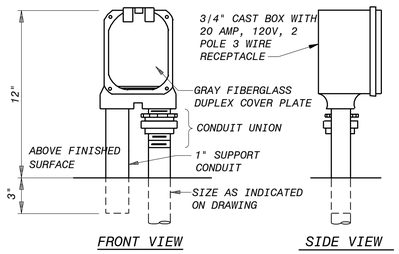

NOTE: ALL EXPOSED CONDUIT SHALL BE PVC COATED RIGID STEEL.

TYPICAL WEATHERPROOF RECEPTACLE MOUNTING DETAIL

NO SCALE

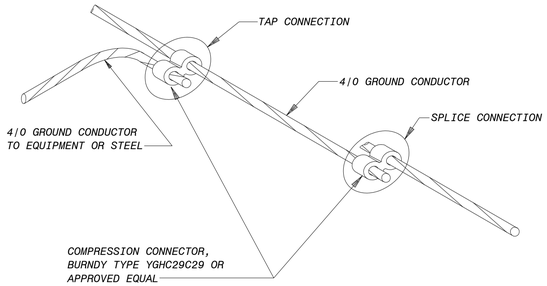

NOTE: CONTRACTOR SHALL APPLY AN OXIDE-INHIBITING JOINT COMPOUND TO THE INSIDE CONTACT SURFACE OF THE COMPRESSION CONNECTOR PRIOR TO INSTALLING THE COMPRESSION CONNECTOR.

TYPICAL COMPRESSION FITTING TEE CONNECTION

NO SCALE

NOTE:

1. SEE DRAWINGS 00-E-001 AND 00-E-002 FOR ELECTRICAL LEGEND, ABBREVIATIONS AND NOTES.

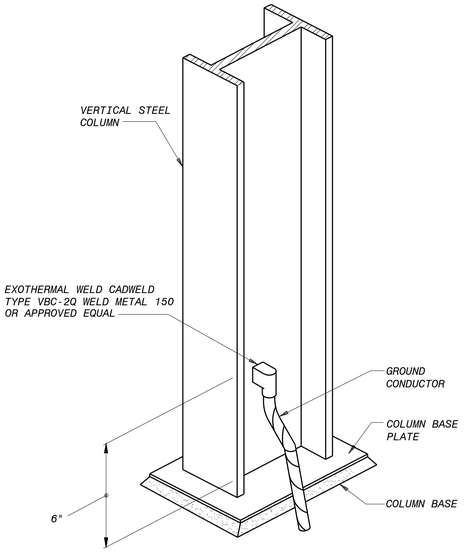

TYPICAL EXOTHERMAL WELD STRUCTURE COLUMN GROUNDING

NO SCALE

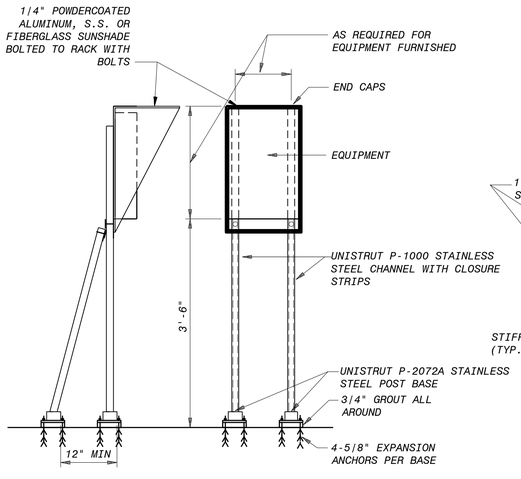

TYPICAL EQUIPMENT MOUNTING DETAIL

NO SCALE

NOTE: IN OUTDOOR OR WET LOCATIONS, USE STAINLESS STEEL BOLTS, NUTS, WASHERS, ANCHOR BOLTS, AND SUNSHADE.

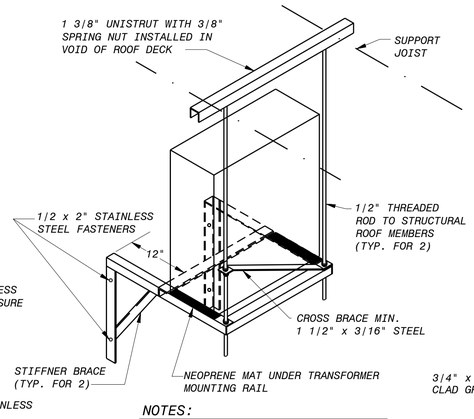

NOTES:

1. FRAME TO BE MINIMUM 2"x 2"x 1/4"
2. FULL WELD AT ALL JOINTS.
3. EPOXY ENAMEL PAINT ASSEMBLY PRIOR TO INSTALLATION

TYPICAL WALL MOUNTED TRANSFORMER SUPPORT FOR UP TO 50KVA UNITS

NO SCALE

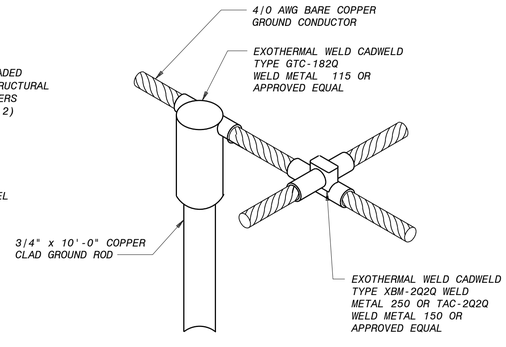

TYPICAL EXOTHERMAL WELD GROUND ROD AT CROSS OR TEE CONNECTION

NO SCALE

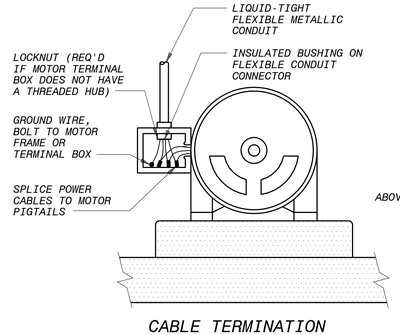

CABLE TERMINATION AT MOTOR

NO SCALE

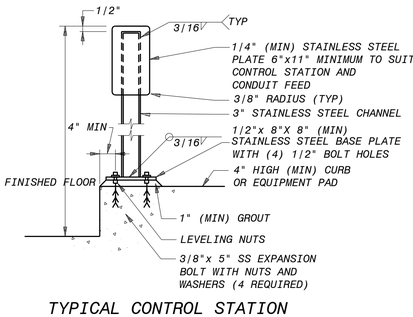

TYPICAL CONTROL STATION MOUNTING DETAIL

NO SCALE

NOTE: IN OUTDOOR OR WET LOCATIONS, USE STAINLESS STEEL BOLTS, NUTS, WASHERS, ANCHOR BOLTS, AND SUNSHADE.

NO.	BY	CHK	APP	DATE	REVISIONS AND RECORD OF USE
B	JSL	MAS	MJK	3/31/2020	90% SUBMITTAL
A	JSL	MJK	EVB	7/30/2019	60% SUBMITTAL

BLACK & VEATCH
JOINT VENTURE
BLACK & VEATCH
FILANC

CITY OF MORRO BAY
MORRO BAY WRF
RECLAMATION FACILITY (WRF)

GENERAL
ELECTRICAL
INSTALLATION DETAILS

DESIGNED:	JSL
DETAILED:	SBC
CHECKED:	MAS
APPROVED:	MJK
DATE:	3/31/2020

0 1/2 1
IF THIS BAR DOES NOT MEASURE 1" THEN DRAWING IS NOT TO FULL SCALE

PROJECT NO.
400530

00-E-504
SHEET
OF

90% SUBMITTAL - NOT FOR CONSTRUCTION

FB0000A
D400530
PLOTTED: 3/27/2020 7:44 AM FILE: C:\PWBatchPDF\Process\400530 - Morro Bay WRF\400530-00-E-504.dwg

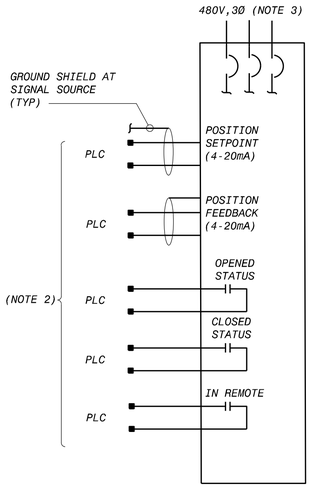

TYPICAL
MODULATING VALVE ACTUATOR
(480V,3PH)

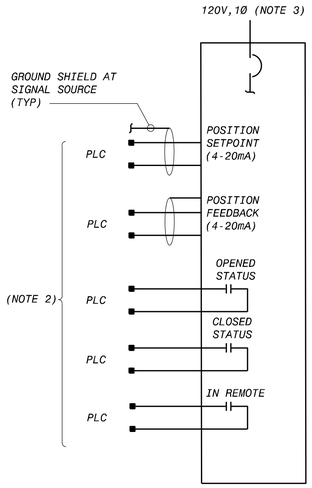

TYPICAL
MODULATING VALVE ACTUATOR
(120V,1PH)

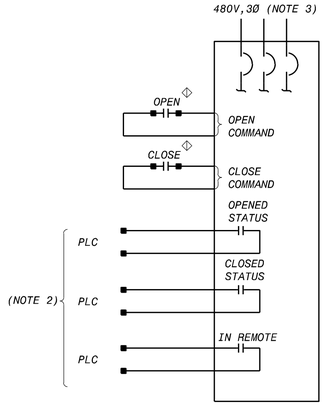

TYPICAL
OPEN/CLOSE VALVE ACTUATOR
(480V,3PH)

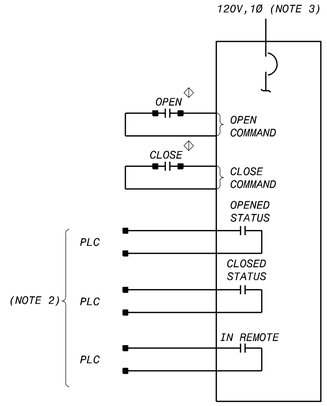

TYPICAL
OPEN/CLOSE VALVE ACTUATOR
(120V,1PH)

LEGENDS:

- ◇ AT VALVE
- ◇ AT DRIVEN EQUIPMENT
- ◇ AT PLC/RIO PANEL
- ◆ REMOTE FROM STARTER AND DRIVEN EQUIPMENT
- ● AT CONTROL STATION
- ◇ AT DRIVE
- ◇ AT TCP

NOTES:

1. SEE DRAWINGS 00-E-001 AND 00-E-002 FOR ELECTRICAL LEGEND, ABBREVIATIONS AND NOTES.
2. REFER TO P&ID'S FOR PLC TAGS.
3. REFER TO PANEL SCHEDULES FOR CIRCUIT NUMBER.
4. THESE ARE TYPICAL SCHEMATICS FOR ACTUATED/OPEN/CLOSE VALVES. REFER TO P&IDs AND ELECTRICAL DRAWINGS FOR VALVE TAGS.

90% SUBMITTAL - NOT FOR CONSTRUCTION

NO.	BY	CHK	APP
B	JSL	MAS	MJK
A	JSL	MJK	EVB

REVISIONS AND RECORD OF USE

DATE	
3/31/2020	90% SUBMITTAL
7/30/2019	60% SUBMITTAL

No. E 17748

BLACK & VEATCH
JOINT VENTURE
FILANC
BLACK & VEATCH

CITY OF MORRO BAY
MORRO BAY WRF
RECLAMATION FACILITY (WRF)

GENERAL
ELECTRICAL
TYPICAL ELECTRICAL VALVE SCHEMATICS

DESIGNED: JSL
DETAILED: SBC
CHECKED: MAS
APPROVED: MJK
DATE: 3/31/2020

0 1/2 1
IF THIS BAR DOES NOT MEASURE 1" THEN DRAWING IS NOT TO FULL SCALE

PROJECT NO.
400530

00-E-721
SHEET
OF

FB9000A
D400530
PLOTTED: 3/31/2020 9:40 AM FILE: C:\pw_working\bvw_americas\d0683637\400530-00-E-721.dwg

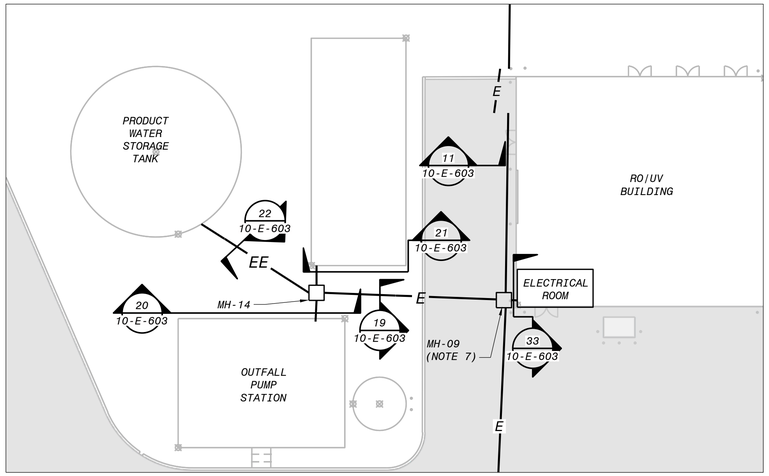

A DETAIL
10-E-100 1" = 20'

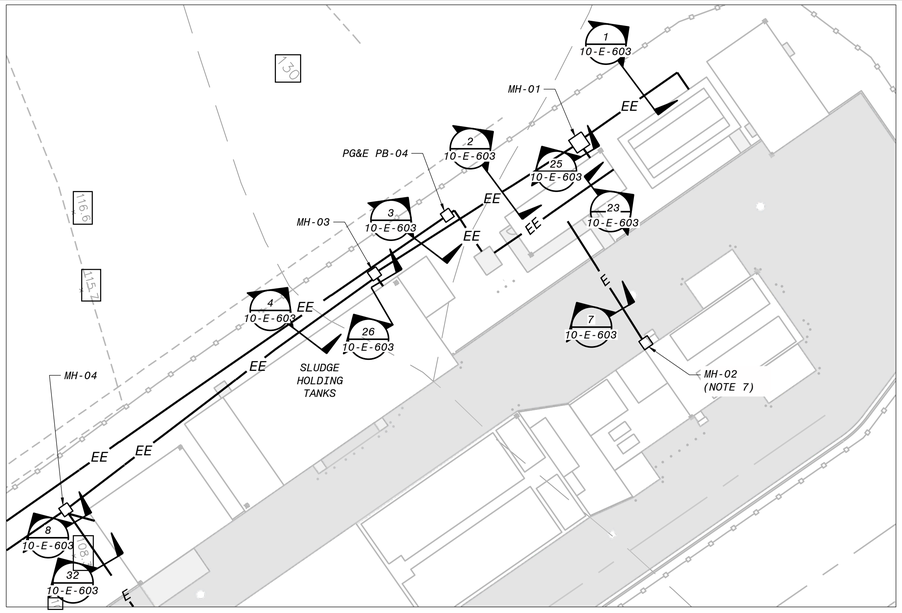

B DETAIL
10-E-100 1" = 30'

NOTES:

1. INCOMING PG&E POWER FEED TO BE DIRECT-BURIED, SCHEDULE 80 PVC.
2. THE SITE DUCT BANK WILL BE DIRECT-BURIED EXCEPT LOCATIONS WITH TRAFFIC WHICH WILL BE REINFORCED CONCRETE.
3. DUCT BANK LOCATED WITHIN ROADWAYS TO BE REINFORCED FOR TRAFFIC LOADING.
4. REMOVABLE AND FIXED BOLLARD PROTECTION ON OPEN SIDES OF PAD SHALL BE PROVIDED. A WORKING CLEARANCE SPACE OF 96" IN FRONT AND 36" CLEAR SPACE ON SIDES AND BACK OF THE TRANSFORMER SHALL BE PROVIDED.
5. REFER TO DRAWINGS 10-E-601 AND 10-E-602 FOR DUCT BANK SCHEDULE.
6. SEE DRAWING 10-E-603 FOR DUCT BANK SECTIONS.
7. THIS IS A TRAFFIC RATED MANHOLE.

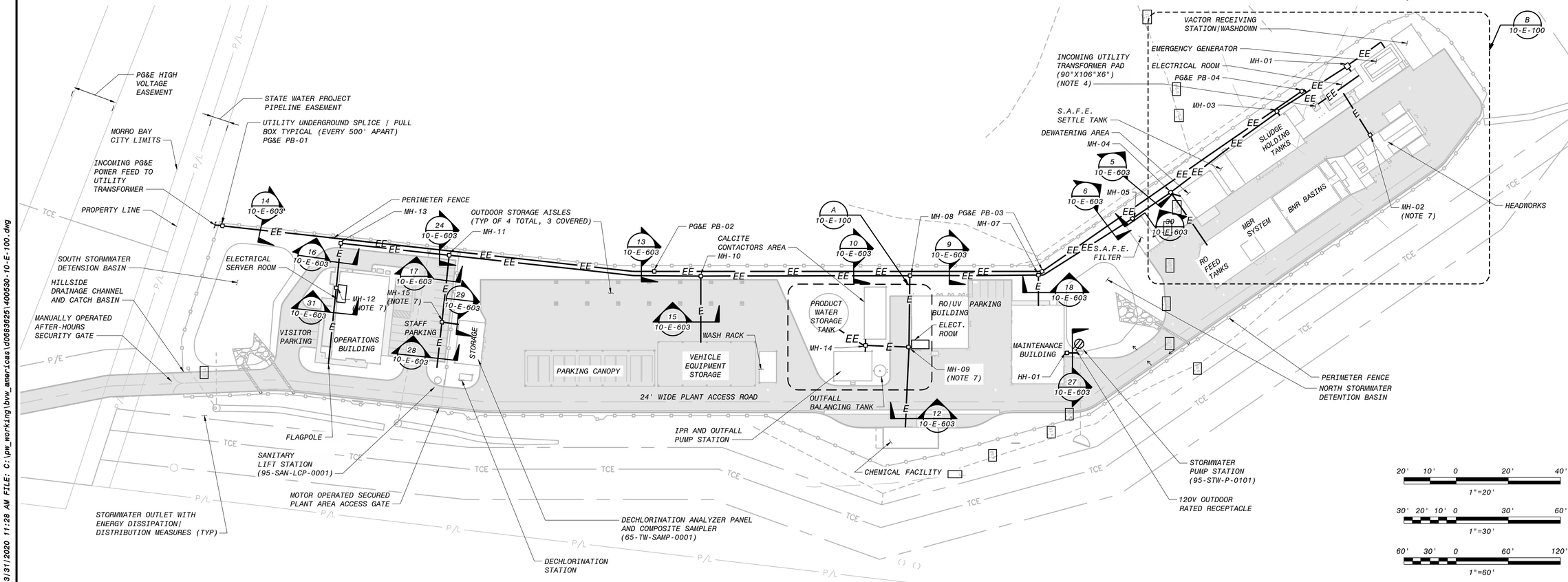

ELECTRICAL POWER PLAN
1"=60'

90% SUBMITTAL - NOT FOR CONSTRUCTION

NO.	BY	CHK	APP
C	JSL	MAS	MJK
B	JSL	MJK	EVB
A	AM	MJK	EVB

REVISIONS AND RECORD OF USE

DATE	
3/31/2020	90% SUBMITTAL
7/30/2019	60% SUBMITTAL
3/5/2019	30% SUBMITTAL

No. E 17748

BLACK & VEATCH
JOINT VENTURE
FILANC
BLACK&VEATCH

CITY OF MORRO BAY
MORRO BAY WRF
RECLAMATION FACILITY (WRF)

SITE - OVERALL ELECTRICAL POWER PLAN

DESIGNED: JSL
DETAILED: SBC
CHECKED: MAS
APPROVED: MJK
DATE: 3/31/2020

20' 10' 0 20' 40'
1"=20'

30' 20' 10' 0 30' 60'
1"=30'

60' 30' 0 60' 120'
1"=60'

0 1/2 1
IF THIS BAR DOES NOT MEASURE 1" THEN DRAWING IS NOT TO FULL SCALE

PROJECT NO.
400530

00-E-001
SHEET
OF

FD9000A
D400530
PLOTTED: 3/31/2020 11:28 AM FILE: C:\pw_working\bvw_americas\d0683825\400530-10-E-100.dwg

NO.	LOCATION	FOOT CANDLE	FIXTURE TYPE
INTERIOR LOCATION			
A1	RO/UV BUILDING	30	F1, F1E, F3, F3E, EXIT
A2	WATER VEHICLES EQUIPMENT STORAGE	15	F1, F1E, F3, F3E, EXIT
A3	ELECTRICAL BUILDING	35	F1, F1E, F3, F3E, EXIT
A4	EMERGENCY POWER FACILITY	35	F1, F1E, F3, F3E, EXIT
A5	CHEMICAL FACILITY	30	F2, F2E, F3, F3E, EXIT
A6	OPERATIONS & CONTROL BUILDING	30	NOTE 2
A7	MAINTENANCE BUILDING	50	F1, F1E, F3, F3E, EXIT
	GENERAL INTERIOR LOCATION		
	OFFICE	70	
	WORKSHOP AREA	75	
	TOILETS/LOCKER ROOM/ LOBBY/CORRIDORS	15	
	LABORATORIES	75	
	LUNCH ROOM	35	

NO.	LOCATION	FOOT CANDLE	FIXTURE TYPE
EXTERIOR LOCATION			
B1	WASH RACK	5	F3, F3E
B2	WRF PARKING CANOPY	1	F1, F1E
B3	COLLECTION VEHICLES EQUIPMENT STORAGE	1	F1, F1E
B4	PLANT DRAIN/SEWER PUMP STATION	30	F1, F1E
B5	HEADWORKS AREA	5	P1, P2, P3
	HEADWORKS AREA - FINE SCREENS	5	
	HEADWORKS AREA - ODOR CONTROL SCREENS	5	
	HEADWORKS AREA - VACTOR WASHDOWN AREA	5	
B6	TREATMENT AREA - BNR BASINS	5	P1, P2, P3
	TREATMENT AREA - MBR SYSTEM	5	
	TREATMENT AREA - RO FEED TANKS	5	
	TREATMENT AREA - RECYCLED WATER PUMPS	5	
B7	EFFLUENT AREA - CALCITE CONTACTOR AREA	5	P1, P2, P3
	EFFLUENT AREA - IPR PRODUCT WATER STORAGE TANK	5	
	EFFLUENT AREA - PRODUCT WATER IPR PUMPS	5	
	EFFLUENT AREA - OUTFALL TANK AND PUMPS	5	
	EFFLUENT AREA - DISINFECTION SYSTEM	5	
B8	RESIDUALS AREA - SLUDGE HOLDING TANKS & SAFE SETTLE TANK AREA	5	P1, P2, P3
	RESIDUALS AREA - DEWATERING FACILITY	5	
	RESIDUALS AREA - SAFE FILTER	5	
B9	STORMWATER PUMP STATION	5	P1, P2, P3
B10	SANITARY LIFT STATION	5	P1, P2, P3
		5	
	GENERAL EXTERIOR LOCATION		
	GENERAL SITE AREA	1	
	WALKWAY	5	
	SECURITY FENCE	0.5	
	VEHICLE GATE	5	
	ROADWAY	0.5	
	MAIN BUILDING ENTRANCES	5	
	SIDE BUILDING ENTRANCES	1	
	PROCESS AREA	5	
	PARKING AREA	1	

FIXTURE	LAMP	DESCRIPTION	TYPE OF MOUNTING
	LIGHTING FIXTURE SCHEDULE (NOTE 2,3)		
F1	LED 53 WATT 5955 LUMENS 4000K	53 WATTS SUSPENDED MOUNTED LED FIXTURE	PENDANT MOUNT
F1E	LED 53 WATT 5955 LUMENS 4000K	53 WATTS SUSPENDED MOUNTED LED FIXTURE WITH EMERGENCY BATTERY	PENDANT MOUNT
F2	LED 53 WATT 5955 LUMENS 4000K	53 WATTS SUSPENDED MOUNTED VAPOR TIGHT LED FIXTURE	SUSPENDED/PENDANT MOUNT VAPOR TIGHT
F2E	LED 53 WATT 5955 LUMENS 4000K	53 WATTS SUSPENDED MOUNTED VAPOR TIGHT LED FIXTURE WITH EMERGENCY BATTERY	SUSPENDED/PENDANT MOUNT VAPOR TIGHT
F3	LED 25 WATT 3201 LUMENS 4000K	25 WATT LED FIXTURE 3201 LUMENS 4000K WALL MOUNTED	WALL MOUNTED, 10' ABOVE GRADE
F3E	LED 25 WATT 3201 LUMENS 4000K	25 WATT LED FIXTURE 3201 LUMENS 4000K WALL MOUNTED WITH EMERGENCY BATTERY	WALL MOUNTED, 10' ABOVE GRADE
P1	LED 52 WATT 5862 LUMENS 4000K	52 WATTS, POLE MOUNTED LED FIXTURE, OUTDOOR USE, PHOTO CELL CONTROLLED	10' POLE MOUNTED , PHOTO CELL CONTROLLED
P2	LED 52 WATT 5862 LUMENS 4000K	52 WATTS, STANCHION MOUNTED LED FIXTURE, OUTDOOR USE, PHOTO CELL CONTROLLED	STANCHION MOUNTED 10' ABOVE PLATFORM PHOTO CELL CONTROLLED
P3	LED 140 WATT 19677 LUMENS 4000K	140 WATT LED FLOOD LIGHT, POLE MOUNTED, OUTDOOR USE, PHOTO CELL CONTROLLED	FLOODLIGHT POLE MOUNTED 10', PHOTO CELL CONTROL
EXIT	LED LAMPS FURNISHED WITH UNIT	INDUSTRIAL EMERGENCY EXIT SIGN, NI-CAD BATTERY	EXIT DOORS, WALL MOUNTED 1' ABOVE DOOR

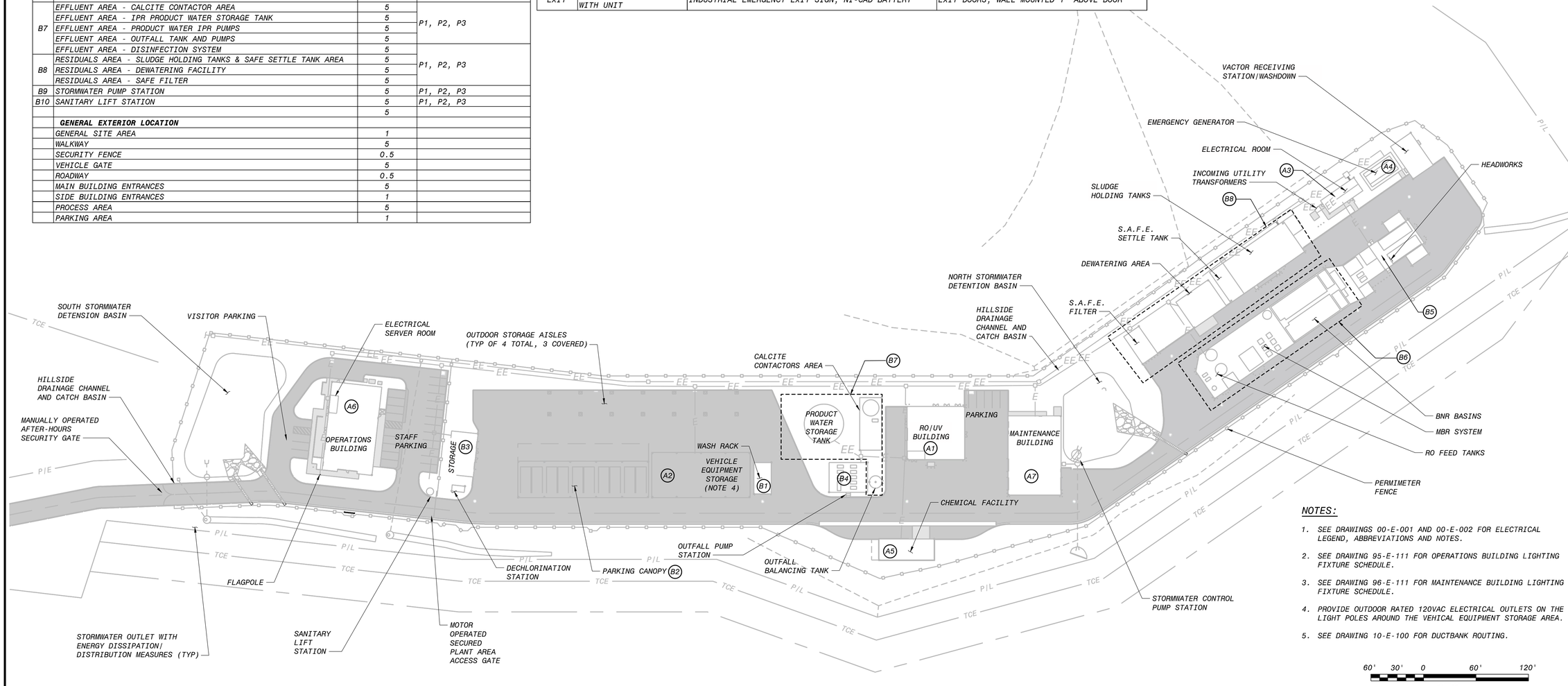

ELECTRICAL LIGHTING PLAN
1"=60'

NOTES:

1. SEE DRAWINGS 00-E-001 AND 00-E-002 FOR ELECTRICAL LEGEND, ABBREVIATIONS AND NOTES.
2. SEE DRAWING 95-E-111 FOR OPERATIONS BUILDING LIGHTING FIXTURE SCHEDULE.
3. SEE DRAWING 96-E-111 FOR MAINTENANCE BUILDING LIGHTING FIXTURE SCHEDULE.
4. PROVIDE OUTDOOR RATED 120VAC ELECTRICAL OUTLETS ON THE LIGHT POLES AROUND THE VEHICAL EQUIPMENT STORAGE AREA.
5. SEE DRAWING 10-E-100 FOR DUCTBANK ROUTING.

90% SUBMITTAL - NOT FOR CONSTRUCTION

NO.	BY	CHK	APP	DATE	REVISIONS AND RECORD OF USE
B	JSL	MAS	MJK	3/31/2020	90% SUBMITTAL
A	JSL	MJK	EVB	7/30/2019	60% SUBMITTAL

BLACK & VEATCH
JOINT VENTURE
BLACK & VEATCH
FILANC

CITY OF MORRO BAY
MORRO BAY WRF
RECLAMATION FACILITY (WRF)

SITE - OVERALL
ELECTRICAL
LIGHTING PLAN

DESIGNED: JSL
DETAILED: SBC
CHECKED: MAS
APPROVED: MJK
DATE: 3/31/2020

0 1/2 1
IF THIS BAR DOES NOT MEASURE 1" THEN DRAWING IS NOT TO FULL SCALE

PROJECT NO.
400530

10-E-111
SHEET
OF

FD9000A
D400530
PLOTTED: 3/31/2020 11:33 AM FILE: C:\pw_working\bvw_americas\d0683637\400530-10-E-111.dwg

CONDUIT #	CONDUIT SIZE	CIRCUIT(S)	ORIGIN	DESTINATION	THROUGH SECTION CUTS
1	3	80ELECGEN0001-1	ELECTRICAL BUILDING	EMERGENCY GENERATOR	25,1
2	3	80ELECGEN0001-1	ELECTRICAL BUILDING	EMERGENCY GENERATOR	25,1
3	3	80ELECGEN0001-1	ELECTRICAL BUILDING	EMERGENCY GENERATOR	25,1
4	3	80ELECSWB0001-5	ELECTRICAL BUILDING	INCOMING UTILITY TRANSFORMER PAD	23
5	3	80ELECSWB0001-5	ELECTRICAL BUILDING	INCOMING UTILITY TRANSFORMER PAD	23
6	3	80ELECSWB0001-5	ELECTRICAL BUILDING	INCOMING UTILITY TRANSFORMER PAD	23
7	3	80ELECSWB0001-5	ELECTRICAL BUILDING	INCOMING UTILITY TRANSFORMER PAD	23
8	3	80ELECSWB0001-5	ELECTRICAL BUILDING	INCOMING UTILITY TRANSFORMER PAD	23
9	3	80ELECSWB0001-5	ELECTRICAL BUILDING	INCOMING UTILITY TRANSFORMER PAD	23
10	3	80ELECSWB0001-5	ELECTRICAL BUILDING	INCOMING UTILITY TRANSFORMER PAD	23
11	3	80ELECSWB0001-5	ELECTRICAL BUILDING	INCOMING UTILITY TRANSFORMER PAD	23
12	2	80ELECMCC0001-10	ELECTRICAL BUILDING	RESIDUAL AREA (DEWATERING AREA)	25,2,3,4,8
13	3	80ELECMCC0002-11A,11B,11C,11D 80ELECMCC0002-12A,12B,12C,12D	ELECTRICAL BUILDING	TREATMENT AREA (BNR,MBR & RO FEED TANKS)	7
14	3	80ELECPP0002-13, 14, 15, 16	ELECTRICAL BUILDING	RESIDUAL AREA (SAFE FILTER AREA)	25,2,3,4,5,30
15	2	80ELECMCC0001-8	ELECTRICAL BUILDING	RESIDUAL AREA (SLUDGE HOLDING TANKS AND SAFE SETTLE TANK)	25,2,3,26
16	2	80CTRLLCP0001-27	ELECTRICAL BUILDING	OPERATIONS BUILDING	25,2,3,4,5,6,9,10,13,24,16
17	3	80ELECMCC0001-8A,8B,8C, 9A,9B,9C	ELECTRICAL BUILDING	RESIDUAL AREA (SLUDGE HOLDING TANKS AND SAFE SETTLE TANK)	25,2,3,26
18	2	21CTRLRI00001-25	RESIDUAL AREA (DEWATERING AREA)	HEADWORKS AREA	8,4,3,2,25,7
19	2	31CTRLCP0001-90	TREATMENT AREA (BNR,MBR & RO FEED TANKS)	CHEMICAL FACILITY	12,11,9,6,5,8
20	3	80ELECSWB0001-3	ELECTRICAL BUILDING	RO/UV BUILDING	33,11,9,6,5,4,3,2,25
21	3	80ELECSWB0001-3	ELECTRICAL BUILDING	RO/UV BUILDING	33,11,9,6,5,4,3,2,25
22	3	80ELECSWB0001-3	ELECTRICAL BUILDING	RO/UV BUILDING	33,11,9,6,5,4,3,2,25
23	3	80ELECSWB0001-3	ELECTRICAL BUILDING	RO/UV BUILDING	33,11,9,6,5,4,3,2,25
24	3	80ELECSWB0001-3	ELECTRICAL BUILDING	RO/UV BUILDING	33,11,9,6,5,4,3,2,25
25	2	80ELECMCC0001-17	ELECTRICAL BUILDING	RESIDUAL AREA (SLUDGE HOLDING TANKS AND SAFE SETTLE TANK)	25,2,3,26
26	2	80ELECMCC0002-10	ELECTRICAL BUILDING	TREATMENT AREA (BNR,MBR & RO FEED TANKS)	7
27	2	80ELECMCC0001-15	ELECTRICAL BUILDING	RESIDUAL AREA (SAFE FILTER AREA)	25,2,3,4,5,30
28	3	80ELECMCC0002-13A,13B,13C,13D 80ELECMCC0002-14A,14B,14C,14D	ELECTRICAL BUILDING	TREATMENT AREA (BNR,MBR & RO FEED TANKS)	7
29	2	80ELECMCC0001-22	ELECTRICAL BUILDING	RESIDUAL AREA (DEWATERING AREA)	25,2,3,4,8
30	2	51CTRLLCP0001-51	RO/UV BUILDING	MAINTENANCE BUILDING	33,11,9,18
31	2	51CTRLLCP0001-49	RO/UV BUILDING	ELECTRICAL BUILDING	33,11,9,6,5,4,3,2,25
32	3	80ELECMCC0001-13, 19,20,21	ELECTRICAL BUILDING	RESIDUAL AREA (DEWATERING AREA)	25,2,3,4,8
33	3	80ELECMCC0001-1, 2,3	ELECTRICAL BUILDING	HEADWORKS AREA	7
34	3	80ELECMCC0002-1, 80ELECMCC0002-2, 80ELECMCC0002-3	ELECTRICAL BUILDING	TREATMENT AREA (BNR,MBR & RO FEED TANKS)	7
35	3	80ELECMCC0002-4, 80ELECMCC0002-5	ELECTRICAL BUILDING	TREATMENT AREA (BNR,MBR & RO FEED TANKS)	7
36	2	80ELECMCC0002-11	ELECTRICAL BUILDING	TREATMENT AREA (BNR,MBR & RO FEED TANKS)	7
37	2	80ELECMCC0002-12	ELECTRICAL BUILDING	TREATMENT AREA (BNR,MBR & RO FEED TANKS)	7
38	2	80ELECMCC0002-13	ELECTRICAL BUILDING	TREATMENT AREA (BNR,MBR & RO FEED TANKS)	7
39	2	80ELECMCC0002-14,	ELECTRICAL BUILDING	TREATMENT AREA (BNR,MBR & RO FEED TANKS)	7
40	2	80ELECMCC0002-7,	ELECTRICAL BUILDING	TREATMENT AREA (BNR,MBR & RO FEED TANKS)	7
41	2	80ELECPP0001-4,6,7	ELECTRICAL BUILDING	HEADWORKS AREA	7
42	3	80ELECPP0002- 1, 3, 5, 7	ELECTRICAL BUILDING	HEADWORKS AREA	7
43	3	80ELECMCC0001-4, 5,6	ELECTRICAL BUILDING	HEADWORKS AREA	7
44	3	80ELECPP0003-1, 2, 3, 5,	ELECTRICAL BUILDING	TREATMENT AREA (BNR,MBR & RO FEED TANKS)	7
45	3	80ELECPP0003-4, 11, 19, 21	ELECTRICAL BUILDING	TREATMENT AREA (BNR,MBR & RO FEED TANKS)	7
46	3	80ELECPP0004- 1, 3, 5, 9	ELECTRICAL BUILDING	TREATMENT AREA (BNR,MBR & RO FEED TANKS)	7
47	3	80ELECPP0004- 11, 13, 15	ELECTRICAL BUILDING	TREATMENT AREA (BNR,MBR & RO FEED TANKS)	7

DUCT BANK SCHEDULE

NOTES:

1. SEE DRAWINGS 00-E-001 AND 00-E-002 FOR ELECTRICAL LEGEND, ABBREVIATIONS AND NOTES.
2. SEE DRAWING 10-E-100 FOR ELECTRICAL SITE PLAN.
3. SEE DRAWING 10-E-602 FOR DUCT BANK SCHEDULE.
4. SEE DRAWING 10-E-603 FOR DUCT BANK SECTIONS.

90% SUBMITTAL- NOT FOR CONSTRUCTION

NO.	BY	CHK	APP	DATE	REVISIONS AND RECORD OF USE
B	JSL	MAS	MJK	3/31/2020	90% SUBMITTAL
A	JSL	MJK	EVB	7/30/2019	60% SUBMITTAL

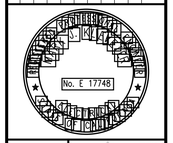

BLACK & VEATCH JOINT VENTURE FILANC BLACK & VEATCH

MJK
MORRO BAY WRF
RECLAMATION FACILITY (WRF)

SITE - OVERALL ELECTRICAL DUCT BANK SCHEDULE

DESIGNED: JSL
DETAILED: SBC
CHECKED: MAS
APPROVED: MJK
DATE: 3/31/2020

0 1/2 1
IF THIS BAR DOES NOT MEASURE 1" THEN DRAWING IS NOT TO FULL SCALE

PROJECT NO.
400530

10-E-601
SHEET
OF

FD9000A
0400530
PLOTTED: 3/31/2020 3:04 PM FILE: C:\pw_working\bvw_americas\d0683637\400530-10-E-601.dwg

CONDUIT #	CONDUIT SIZE	CIRCUIT(S)	ORIGIN	DESTINATION	THROUGH SECTION CUTS
48	3	80ELECMCC0002-1A,1B,1C,1D 80ELECMCC0002-2A,2B,2C,2D 80ELECMCC0002-3A, 3B,3C,3D	ELECTRICAL BUILDING	TREATMENT AREA (BNR,MBR & RO FEED TANKS)	7
49	3	80ELECMCC0002-4A, 4B,4C,4D,4E 80ELECMCC0002-5A,5B,5C,5D,5E 80ELECMCC0002-6A,6B,6C,6D	ELECTRICAL BUILDING	TREATMENT AREA (BNR,MBR & RO FEED TANKS)	7
50	2	50ELECMCC0001-20	RO/UV BUILDING	PRODUCT WATER AREA (OUTFALL PUMPS AND IPR PUMPS)	33,19,20
51	2	80CTRLLCP0001-29	HEADWORKS AREA	ELECTRICAL BUILDING	7
52	2	80ELECMCC0002-6	ELECTRICAL BUILDING	TREATMENT AREA (BNR,MBR & RO FEED TANKS)	7
53	2	80ELECMCC0001-18	ELECTRICAL BUILDING	RESIDUAL AREA (SLUDGE HOLDING TANKS AND SAFE SETTLE TANK)	25,2,3,26
54	2	50ELECMCC0001-11	RO/UV BUILDING	MAINTENANCE BUILDING	33,11,9,18
55	2	50ELECMCC0001-1	RO/UV BUILDING	PRODUCT WATER AREA (OUTFALL PUMPS AND IPR PUMPS)	33,19,20
56	2	50ELECMCC0001-2	RO/UV BUILDING	PRODUCT WATER AREA (OUTFALL PUMPS AND IPR PUMPS)	33,19,20
57	2	50ELECMCC0001-6	RO/UV BUILDING	PRODUCT WATER AREA (OUTFALL PUMPS AND IPR PUMPS)	33,19,20
58	3	50ELECMCC0001-4	RO/UV BUILDING	OPERATIONS BUILDING	33,11,10,13,24,16
59	2	50ELECMCC0001-21	RO/UV BUILDING	PRODUCT WATER AREA (OUTFALL PUMPS AND IPR PUMPS)	33,19,20
60	2	50ELECMCC0001-22	RO/UV BUILDING	PRODUCT WATER AREA (OUTFALL PUMPS AND IPR PUMPS)	33,19,20
61	3	50ELECPP0001- 13, 14	RO/UV BUILDING	CHEMICAL FACILITY	33,12
62	3	50ELECPP0001-18, 19, 20, 21, 22	RO/UV BUILDING	CHEMICAL FACILITY	33,12
63	2	80ELECPP0001-1	ELECTRICAL BUILDING	EMERGENCY GENERATOR	25,1
64	2	51CRTLLCP0001-38,39,40 64TWLCP0001-1	RO/UV BUILDING	PRODUCT WATER AREA (OUTFALL PUMPS AND IPR PUMPS)	33,19,20
65	2	80ELECGEN0001-1	ELECTRICAL BUILDING	EMERGENCY GENERATOR	25,1
66	2	80ELECGEN0001-1	ELECTRICAL BUILDING	EMERGENCY GENERATOR	25,1
67	2	80ELECGEN0001-1	ELECTRICAL BUILDING	EMERGENCY GENERATOR	25,1
68	3	50ELECMCC0001-14 50ELECPP0002 - 7	RO/UV BUILDING	PRODUCT WATER AREA (CALCITE CONTACTORS)	33,19,21
69	2	50ELECMCC0001-19	RO/UV BUILDING	CHEMICAL FACILITY	33,12
70	2	50ELECMCC0001-23	RO/UV BUILDING	PRODUCT WATER AREA (OUTFALL PUMPS AND IPR PUMPS)	33,19,20
71	2	50ELECMCC0001-5	RO/UV BUILDING	SANITARY LIFT STATION	33,11,10,13,17,28
72	3	80ELECMCC0001-17A,17B,17C, 18A,18B,18C	ELECTRICAL BUILDING	RESIDUAL AREA (SLUDGE HOLDING TANKS AND SAFE SETTLE TANK)	25,2,3,26
73	3	50ELECMCC0001-1A,1B, 1C, 2A,2B,2C, 6A,6B, 6C	RO/UV BUILDING	PRODUCT WATER AREA (OUTFALL PUMPS AND IPR PUMPS)	33,19,20
74	3	50ELECMCC0001- 20A,20B,20C, 21A,21B,21C	RO/UV BUILDING	PRODUCT WATER AREA (OUTFALL PUMPS AND IPR PUMPS)	33,19,20
75	2	CABLES TO VEHICLE EQUIPMENT STORAGE	RO/UV BUILDING	VEHICLE EQUIPMENT STORAGE	33,11,10,15
76	3	80ELECPP0001-8,9,12,14,16	ELECTRICAL BUILDING	RESIDUAL AREA (DEWATERING AREA)	25,2,3,4,8
77	3	80ELECPP0002-11, 12	ELECTRICAL BUILDING	RESIDUAL AREA (DEWATERING AREA)	25,2,3,4,8
78	2	80CTRLLCP0001-24	ELECTRICAL BUILDING	EMERGENCY GENERATOR	25,1
79	2	96ELECPP0001-11	MAINTENANCE BUILDING	STORMWATER PUMP STATION	27
80	2	95ELECPP0002-39	OPERATIONS BUILDING	STORAGE BUILDING (DECHLORINATION ANALYZER PANEL AND COMPOSITE SAMPLER)	16,24,17,29
81	3	80ELECPP0002-17, 18, 19, 20, 21	ELECTRICAL BUILDING	RESIDUAL AREA (SAFE FILTER AREA)	25,2,3,4,5,30
82	3	80ELECPP0002- 6, 8, 9, 10	ELECTRICAL BUILDING	HEADWORKS AREA	7
83	3	80ELECPP0004- 14, 18, 21	ELECTRICAL BUILDING	TREATMENT AREA (BNR,MBR & RO FEED TANKS)	7
84	3	50ELECPP0001-31, 32,10	RO/UV BUILDING	CHEMICAL FACILITY	33,12
85	2	31CTRLCP0001-89	TREATMENT AREA (BNR,MBR & RO FEED TANKS)	RESIDUAL AREA (DEWATERING AREA)	30, 8
86	3	51CRTLLCP0001-1,2,3,4,5,6,7	RO/UV BUILDING	PRODUCT WATER AREA (CALCITE CONTACTORS)	33,19,21
87	3	51CRTLLCP0001-8,11 62TWLCP0001-1	RO/UV BUILDING	PRODUCT WATER AREA (STORAGE TANKS)	33,19,22
88	3	51CRTLLCP0001-24,25,26	RO/UV BUILDING	PRODUCT WATER AREA (OUTFALL PUMPS AND IPR PUMPS)	33,19,20
89	3	50ELECMCC0001- 22A,22B,22C, 23A,23B,23C	RO/UV BUILDING	PRODUCT WATER AREA (OUTFALL PUMPS AND IPR PUMPS)	33,19,20
90	3	51CRTLLCP0001-41,42,43,44,45	RO/UV BUILDING	STORAGE BUILDING (DECHLORINATION ANALYZER PANEL AND COMPOSITE SAMPLER)	33,11,10,13,17,29
91	2	51CRTLLCP0001-55	RO/UV BUILDING	SANITARY LIFT STATION	33,11,10,13,17,28
92	2	72CRTLLCP0001-21	RESIDUAL AREA (DEWATERING AREA)	RESIDUAL AREA (SAFE FILTER AREA)	30,5,8
93	2	LIGHTING CABLE TO FLAGPOLE	OPERATIONS BUILDING	FLAGPOLE	31
94	2	80ELECMCC0001-16	ELECTRICAL BUILDING	RESIDUAL AREA (DEWATERING AREA)	25,2,3,4,8
95	2	80ELECMCC0001-9	ELECTRICAL BUILDING	RESIDUAL AREA (SLUDGE HOLDING TANKS AND SAFE SETTLE TANK)	25,2,3,26
96	2	95ELECPP0002-37	OPERATIONS BUILDING	MOTOR OPERATED SECURED PLANT AREA ACCESS GATE	16,24,17,28
97	3	50ELECPP0001- 15, 16, 17,12	RO/UV BUILDING	CHEMICAL FACILITY	33,12
98	3	50ELECPP0001-23, 24,34, 35	RO/UV BUILDING	CHEMICAL FACILITY	33,12
99	3	50ELECMCC0001-4	RO/UV BUILDING	OPERATIONS BUILDING	33,11,10,13,24,16

DUCT BANK SCHEDULE

NOTES:

1. SEE DRAWINGS 00-E-001 AND 00-E-002 FOR ELECTRICAL LEGEND, ABBREVIATIONS AND NOTES.
2. SEE DRAWING 10-E-100 FOR ELECTRICAL SITE PLAN.
3. SEE DRAWING 10-E-601 FOR DUCT BANK SCHEDULE.
4. SEE DRAWING 10-E-603 FOR DUCT BANK SECTIONS.

90% SUBMITTAL - NOT FOR CONSTRUCTION

NO.	BY	CHK	APP	DATE	REVISIONS AND RECORD OF USE
B	JSL	MAS	MJK	3/31/2020	90% SUBMITTAL
A	JSL	MJK	EVB	7/30/2019	60% SUBMITTAL

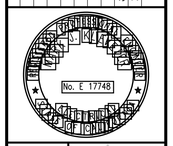

BLACK & VEATCH

JOINT VENTURE

BLACK & VEATCH

FILANC

MJK
MORRO BAY WRF
RECLAMATION FACILITY (WRF)

SITE - OVERALL
ELECTRICAL
DUCT BANK SCHEDULE

DESIGNED: JSL
DETAILED: SBC
CHECKED: MAS
APPROVED: MJK
DATE: 3/31/2020

0 1/2 1
IF THIS BAR DOES NOT MEASURE 1" THEN DRAWING IS NOT TO FULL SCALE

PROJECT NO.
400530

10-E-602
SHEET
OF

FB9000A
D400530
PLOTTED: 3/31/2020 3:07 PM FILE: C:\pw_working\bvw_americas\d0683637\400530-10-E-602.dwg

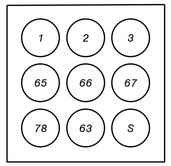

1 SECTION
10-E-100

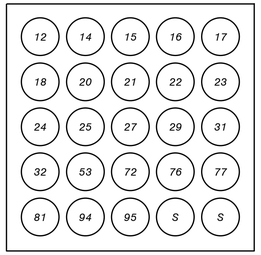

2 SECTION
10-E-100

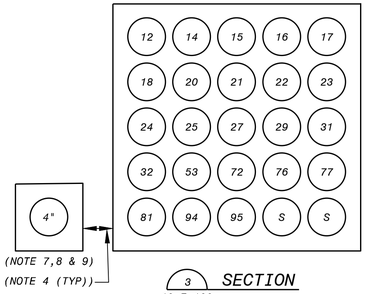

3 SECTION
10-E-100

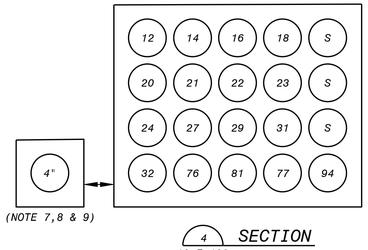

4 SECTION
10-E-100

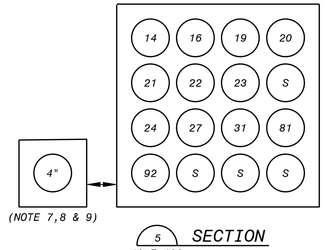

5 SECTION
10-E-100

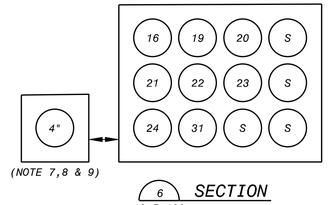

6 SECTION
10-E-100

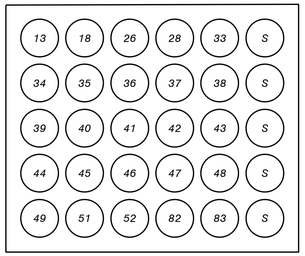

7 SECTION
10-E-100

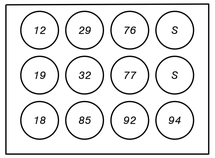

8 SECTION
10-E-100

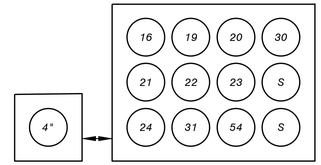

9 SECTION
10-E-100

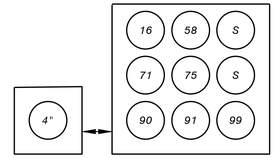

10 SECTION
10-E-100

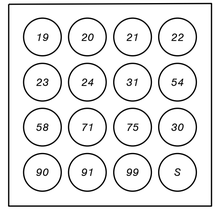

11 SECTION
10-E-100

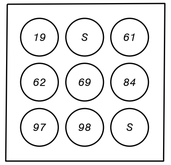

12 SECTION
10-E-100

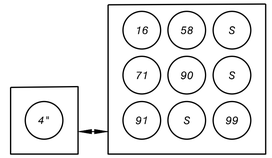

13 SECTION
10-E-100

(NOTE 7,8 & 9)

14 SECTION
10-E-100

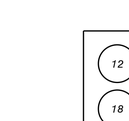

15 SECTION
10-E-100

16 SECTION
10-E-100

17 SECTION
10-E-100

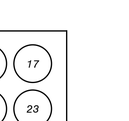

18 SECTION
10-E-100

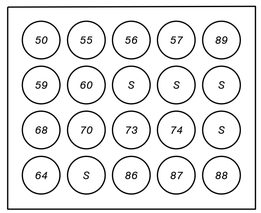

19 SECTION
10-E-100

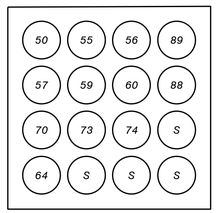

20 SECTION
10-E-100

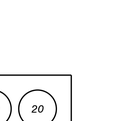

21 SECTION
10-E-100

22 SECTION
10-E-100

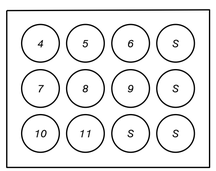

23 SECTION
10-E-100

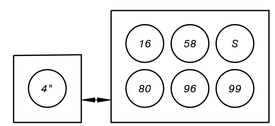

24 SECTION
10-E-100

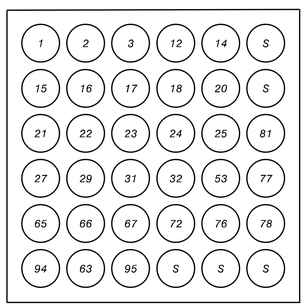

25 SECTION
10-E-100

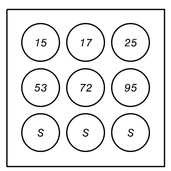

26 SECTION
10-E-100

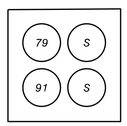

27 SECTION
10-E-100

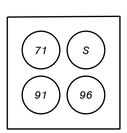

28 SECTION
10-E-100

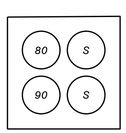

29 SECTION
10-E-100

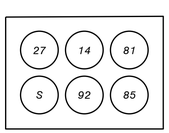

30 SECTION
10-E-100

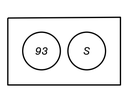

31 SECTION
10-E-100

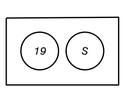

32 SECTION
10-E-100

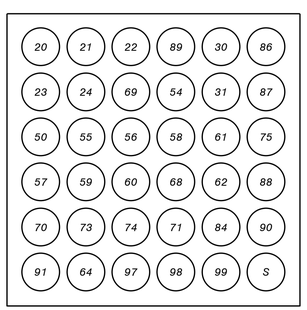

33 SECTION
10-E-100

NOTES:

1. SEE DRAWINGS 00-E-001 AND 00-E-002 FOR ELECTRICAL LEGENDS, ABBREVIATIONS AND GENERAL REQUIREMENTS.
2. SEE DRAWING 10-E-100 FOR ELECTRICAL SITE PLAN.
3. 'S' INDICATES A SPARE 3" CONDUIT.
4. PROVIDE 12" MINIMUM SEPARATION BETWEEN PRIMARY FEED AND LOW VOLTAGE TRENCHES.
5. SEE DRAWINGS 10-E-601 AND 10-E-602 FOR DUCT BANK SCHEDULES.
6. SEE DRAWINGS E-00-502 AND E-00-503 FOR TYPICAL DUCT BANK DETAILS.
7. THE PG & E PRIMARY TRENCH SIZE SHALL BE 18" x 43".
8. 36" OF COVER SHALL BE REQUIRED ABOVE THE PG & E PRIMARY FEED DUCT.
9. CIVIL SUBCONTRACTOR SHALL CONSTRUCT TRENCH AS PER PG & E REQUIREMENT.

90% SUBMITTAL - NOT FOR CONSTRUCTION

NO.	BY	CHK	APP	DATE	REVISIONS AND RECORD OF USE
B	JSL	MAS	MJK	3/31/2020	90% SUBMITTAL
A	JSL	MJK	EVB	7/30/2019	60% SUBMITTAL

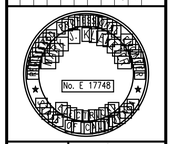

BLACK & VEATCH

JOINT VENTURE

FILANC

BLACK & VEATCH

CITY OF MORRO BAY
MORRO BAY WRF
RECLAMATION FACILITY (WRF)

SITE - OVERALL
ELECTRICAL
DUCT BANK SECTIONS

DESIGNED:	JSL
DETAILED:	SBC
CHECKED:	MAS
APPROVED:	MJK
DATE:	3/31/2020

0 1/2 1

IF THIS BAR DOES NOT MEASURE 1" THEN DRAWING IS NOT TO FULL SCALE

PROJECT NO.
400530

10-E-603
SHEET
OF

FD9000A
D400530
PLOTTED: 3/30/2020 6:05 PM FILE: C:\pw_working\bvw_americas\d0683637\400530-10-E-603.dwg

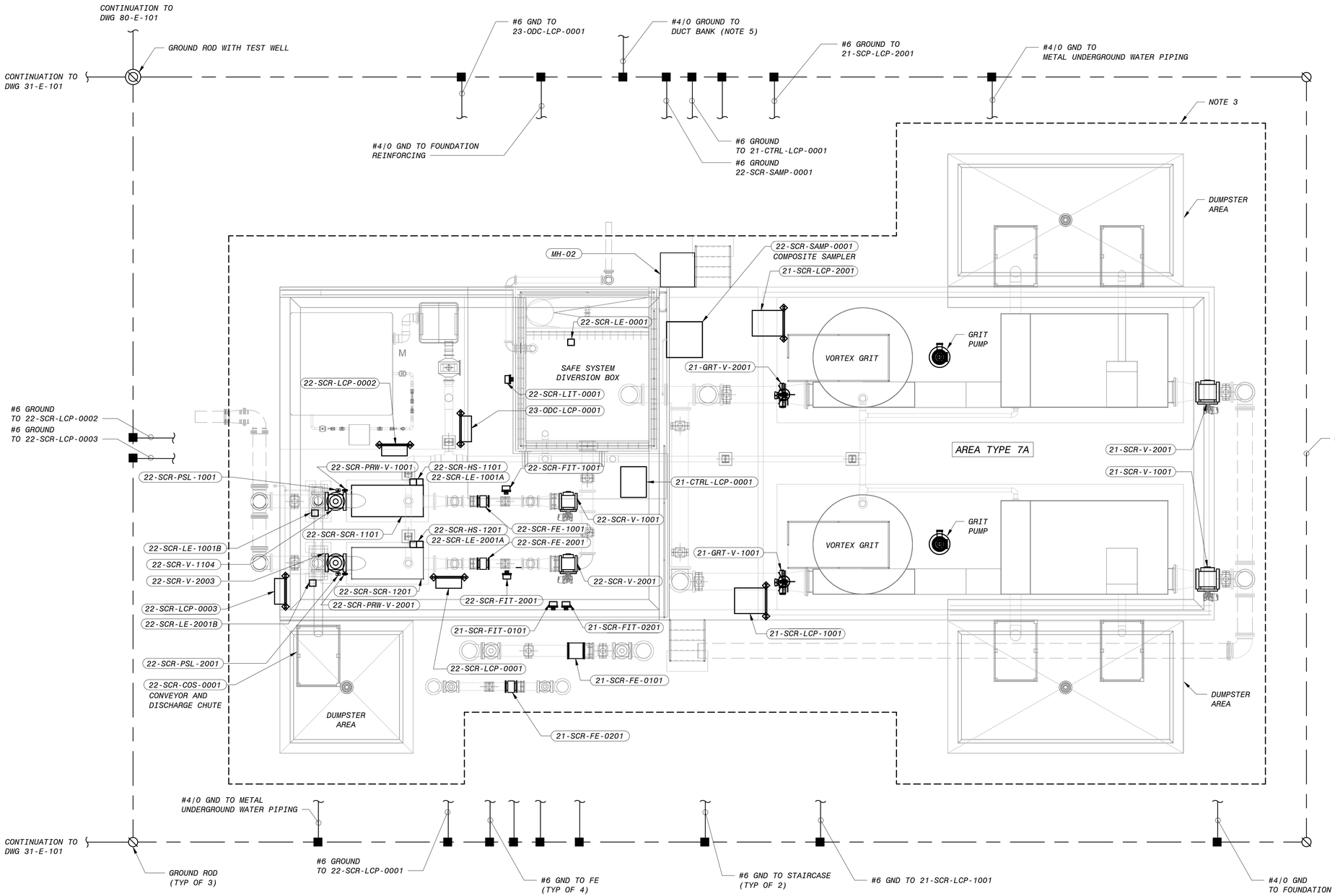

HEADWORKS AREA POWER AND GROUNDING PLAN

3/16" = 1'-0"

6" 4' 2' 0' 5' 10'

3/16" = 1'-0"

NOTES:

1. SEE DRAWING 00-E-001 AND 00-E-002 FOR ELECTRICAL LEGENDS, ABBREVIATIONS AND NOTES.
2. SEE DRAWING 10-E-100 FOR OVERALL ELECTRICAL SITE PLAN.
3. THE AREA SHOWN BY DASH BOUNDARY IS CLASSIFIED CLASS 1 DIVISION 1 AS PER NFPA 820, TABLE 5.2.2,2a.
4. PROVIDE AT LEAST TWO #4/0 GROUND TO EACH OF THE METAL TANKS.
5. FOR CABLE DUCT BANK ENTRY REFER TO SITE OVERALL POWER PLAN (10-E-100).
6. SEE DRAWING 10-E-603 FOR DUCT BANK SECTION.

NO.	BY	CHK	APP	DATE	REVISIONS AND RECORD OF USE
A	JSL	MJK	EVB	3/31/2020	90% SUBMITTAL
B	JSL	TJZ	MJK	7/30/2019	60% SUBMITTAL

REGISTERED PROFESSIONAL ENGINEER MARK J. KLEVEN No. E 17748 ELECTRICAL STATE OF CALIFORNIA

BLACK & VEATCH

JOINT VENTURE

BLACK & VEATCH

FILANC

CITY OF MORRO BAY
MORRO BAY WATER RECLAMATION FACILITY (WRF)

HEADWORKS AREA ELECTRICAL POWER AND GROUNDING PLAN

DESIGNED:	JSL
DETAILED:	SBC
CHECKED:	TJZ
APPROVED:	MJK
DATE:	3/31/2020

0 1/2 1

IF THIS BAR DOES NOT MEASURE 1" THEN DRAWING IS NOT TO FULL SCALE

PROJECT NO. 400530

21-E-101 SHEET OF

PLOTTED: 27-03-2020 18:11:15

D400530

90% SUBMITTAL- NOT FOR CONSTRUCTION

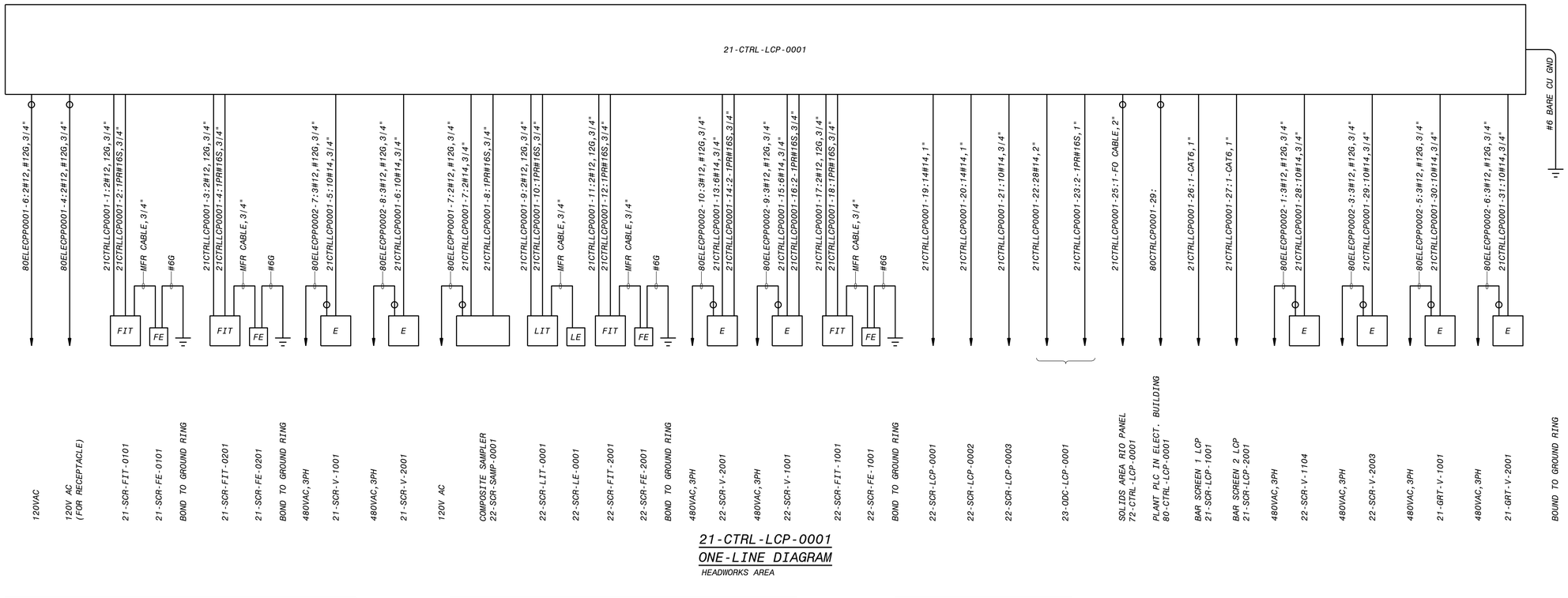

21-CTRL-LCP-0001 ONE-LINE DIAGRAM

HEADWORKS AREA

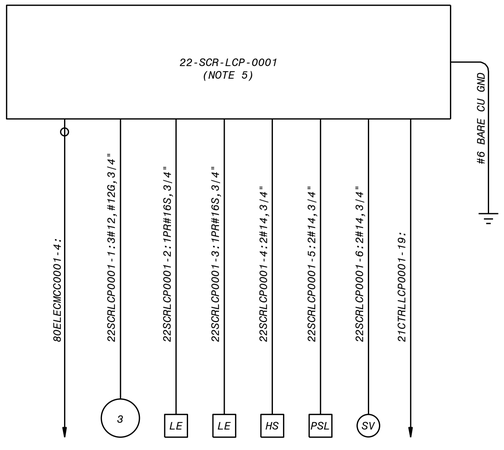

22-SCR-LCP-0001 ONE-LINE DIAGRAM

HEADWORKS AREA

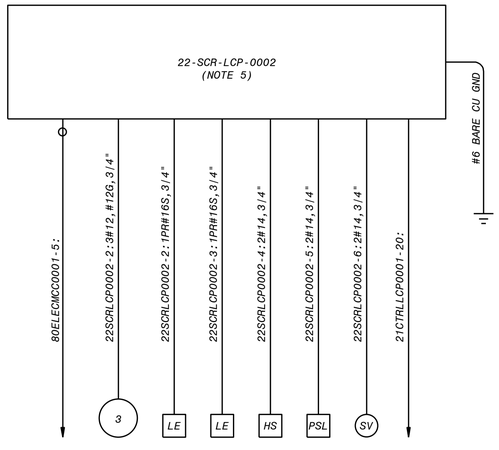

22-SCR-LCP-0002 ONE-LINE DIAGRAM

HEADWORKS AREA

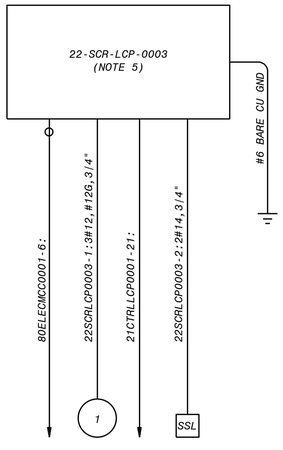

22-SCR-LCP-0003 ONE-LINE DIAGRAM

HEADWORKS AREA

NOTES:

1. SEE DRAWINGS 00-E-001 AND 00-E-002 FOR ELECTRICAL LEGEND, ABBREVIATIONS AND NOTES.
2. SEE DRAWING 00-I-701 FOR FIBRE OPTIC CABLE REQUIREMENTS.
3. ALL CIRCUITS SHOWN ON THIS DRAWING WITHOUT THE DUCT SYMBOL SHALL BE FIELD ROUTED BY ELECTRICAL CONTRACTOR. ELECTRICAL CONTRACTOR TO DETERMINE IF THE CONDUITS SHALL BE BELOW GROUND OR ABOVE GROUND.
4. 24V DC POWER CIRCUIT, 24V DC DIGITAL CIRCUITS AND 24V DC ANALOG CIRCUITS MAY BE COMBINED INTO THE SAME CONDUIT AS LONG AS THE CONDUIT FILL MEETS THE NEC REQUIREMENTS.
5. SEE VENDOR DRAWINGS FOR ADDITIONAL FIELD WIRING.

90% SUBMITTAL- NOT FOR CONSTRUCTION

NO.	BY	CHK	APP
B	JSL	TJZ	MJK
A	JSL	MJK	EVB

REVISIONS AND RECORD OF USE

7/30/2019 60% SUBMITTAL
3/31/2020 90% SUBMITTAL

DATE

No. E 17748

BLACK & VEATCH

JOINT VENTURE

FILANC

BLACK & VEATCH

CITY OF MORRO BAY
MORRO BAY WRF
RECLAMATION FACILITY (WRF)

HEADWORKS AREA
ELECTRICAL
21-CTRL-LCP-0001 ONE-LINE DIAGRAM

DESIGNED: JSL
DETAILED: SBC
CHECKED: TJZ
APPROVED: MJK
DATE: 3/31/2020

0 1/2 1
IF THIS BAR DOES NOT MEASURE 1" THEN DRAWING IS NOT TO FULL SCALE

PROJECT NO.
400530

21-E-711
SHEET
OF

FB9000A
D400530
PLOTTED: 3/27/2020 9:06 PM FILE: C:\pw_working\bvw_americas\d0683637\400530-21-E-711.dwg

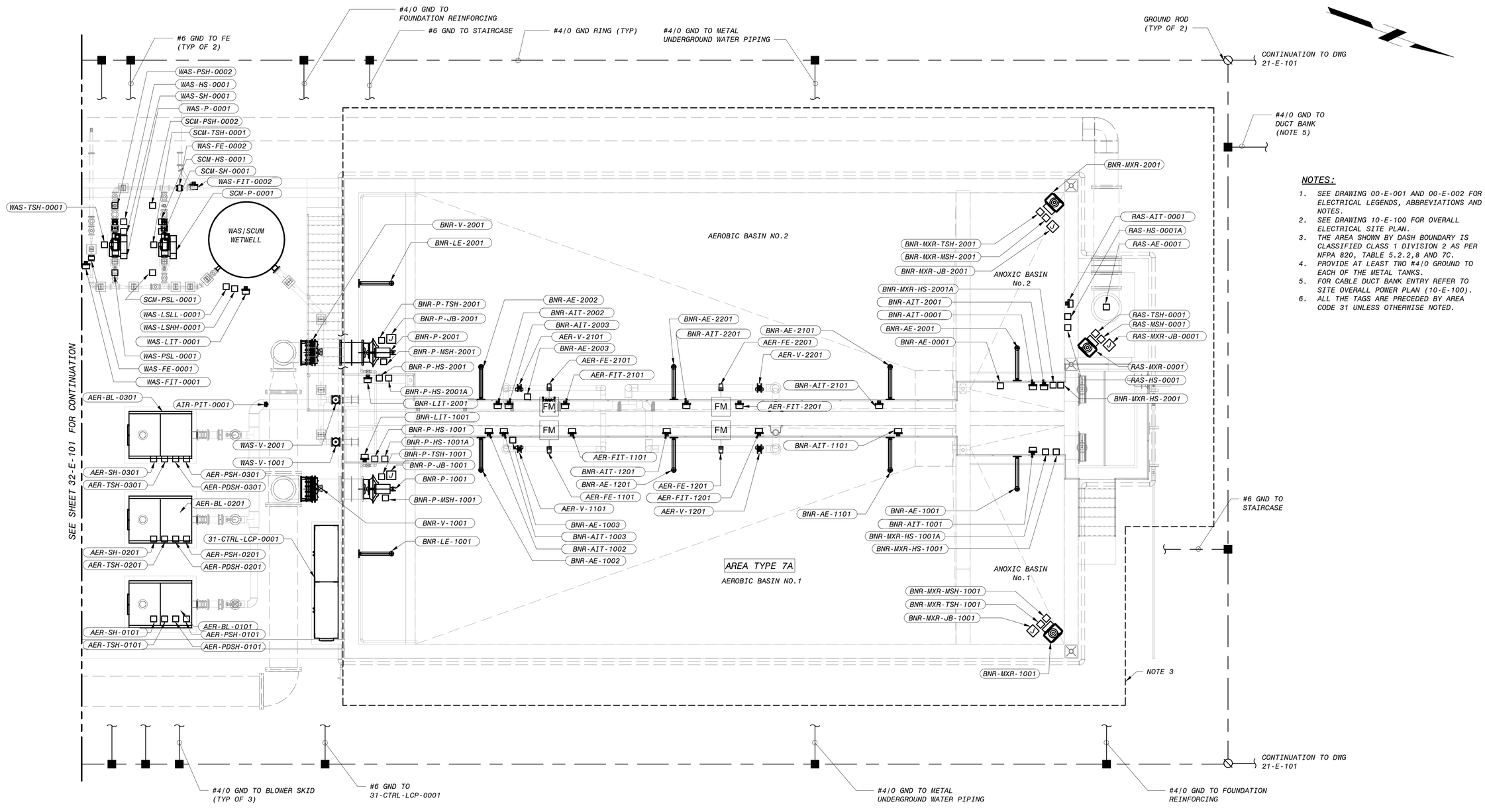

TREATMENT AREA - BNR BASIN POWER AND GROUNDING PLAN

3/16" = 1'-0"

NOTES:

1. SEE DRAWING 00-E-001 AND 00-E-002 FOR ELECTRICAL LEGENDS, ABBREVIATIONS AND NOTES.
2. SEE DRAWING 10-E-100 FOR OVERALL ELECTRICAL SITE PLAN.
3. THE AREA SHOWN BY DASH BOUNDARY IS CLASSIFIED CLASS 1 DIVISION 2 AS PER NFPA 820, TABLE 5.2.2,8 AND 7C.
4. PROVIDE AT LEAST TWO #4/0 GROUND TO EACH OF THE METAL TANKS.
5. FOR CABLE DUCT BANK ENTRY REFER TO SITE OVERALL POWER PLAN (10-E-100).
6. ALL THE TAGS ARE PRECEDED BY AREA CODE 31 UNLESS OTHERWISE NOTED.

NO.	BY	CHK	APP	DATE	REVISIONS AND RECORD OF USE
B	JSL	TJZ	MJK	3/31/2020	90% SUBMITTAL
A	JSL	MJK	EVB	7/30/2019	60% SUBMITTAL

REGISTERED PROFESSIONAL ENGINEER — MARK J. KLEVEN — No. E 17748 — ELECTRICAL — STATE OF CALIFORNIA

BLACK & VEATCH

JOINT VENTURE

BLACK & VEATCH

FILANC

CITY OF MORRO BAY
MORRO BAY WATER
RECLAMATION FACILITY (WRF)

TREATMENT AREA - BNR BASIN
ELECTRICAL
POWER AND GROUNDING PLAN

DESIGNED: JSL
DETAILED: SBC
CHECKED: TJZ
APPROVED: MJK
DATE: 3/31/2020

0 1/2 1
IF THIS BAR DOES NOT MEASURE 1" THEN DRAWING IS NOT TO FULL SCALE

PROJECT NO. 400530

6" 4' 2' 0' 5' 10'
3/16" = 1'-0"

31-E-101
SHEET OF

90% SUBMITTAL- NOT FOR CONSTRUCTION

PLOTTED: 27-03-2020 18:06:43
D400530

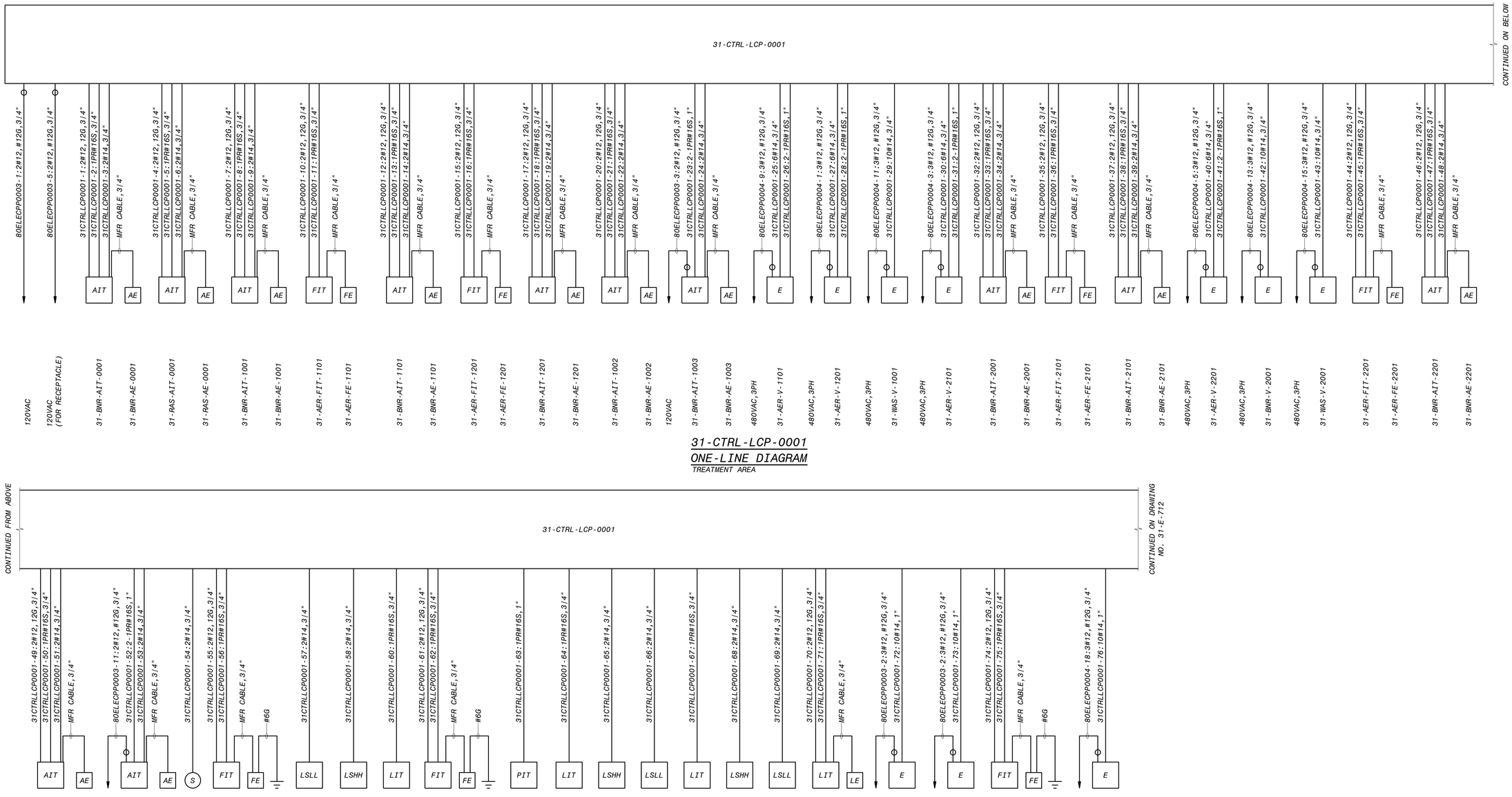

31-CTRL-LCP-0001
ONE-LINE DIAGRAM
TREATMENT AREA

31-CTRL-LCP-0001
ONE-LINE DIAGRAM
TREATMENT AREA

NOTES:

1. SEE DRAWINGS 00-E-001 AND 00-E-002 FOR ELECTRICAL LEGEND, ABBREVIATIONS AND NOTES.
2. ALL CIRCUITS SHOWN ON THIS DRAWING WITHOUT THE DUCT SYMBOL SHALL BE FIELD ROUTED BY ELECTRICAL CONTRACTOR. ELECTRICAL CONTRACTOR TO DETERMINE IF THE CONDUITS SHALL BE BELOW GROUND OR ABOVE GROUND.
3. 24V DC POWER CIRCUIT, 24V DC DIGITAL CIRCUITS AND 24V DC ANALOG CIRCUITS MAY BE COMBINED INTO THE SAME CONDUIT AS LONG AS THE CONDUIT FILL MEETS THE NEC REQUIREMENTS.

90% SUBMITTAL - NOT FOR CONSTRUCTION

NO.	BY	CHK	APP
B	JSL	TJZ	MJK
A	JSL	MJK	EVB

DATE	REVISIONS AND RECORD OF USE
3/31/2020	90% SUBMITTAL
7/30/2019	60% SUBMITTAL

BLACK & VEATCH

JOINT VENTURE

FILANC

BLACK & VEATCH

CITY OF MORRO BAY
MORRO BAY WRF
RECLAMATION FACILITY (WRF)

TREATMENT AREA
ELECTRICAL
31-CTRL-LCP-0001 ONE-LINE DIAGRAM

DESIGNED:	JSL
DETAILED:	SBC
CHECKED:	TJZ
APPROVED:	MJK
DATE:	3/31/2020

0 1/2 1
IF THIS BAR DOES NOT MEASURE 1" THEN DRAWING IS NOT TO FULL SCALE

PROJECT NO.
400530

31-E-711
SHEET
OF

FB0000A
D400530
PLOTTED: 3/27/2020 7:47 AM FILE: C:\PWBatchPDF\Process\400530 - Morro Bay WRF\400530-31-E-711.dwg

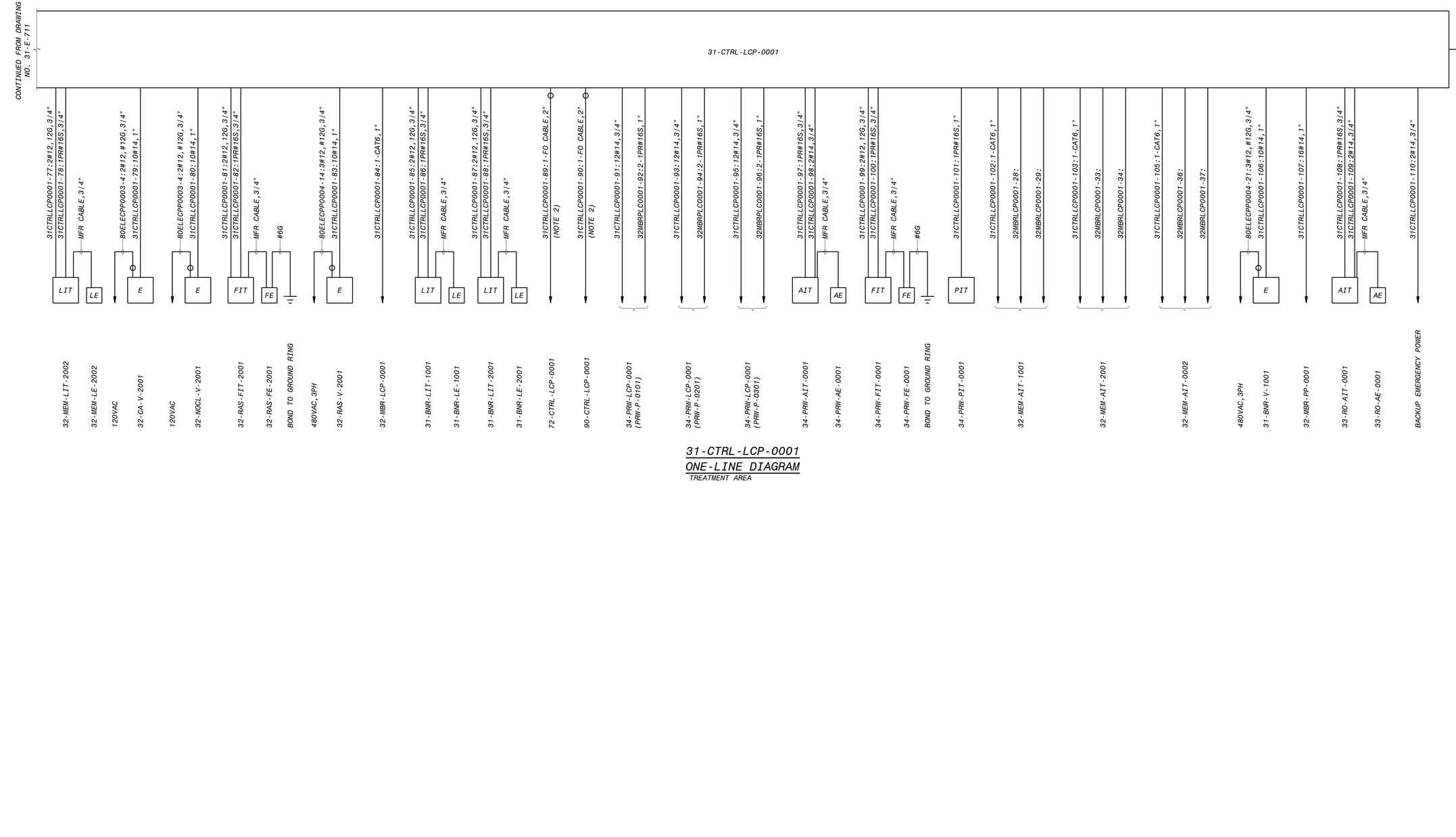

31-CTRL-LCP-0001
ONE-LINE DIAGRAM
TREATMENT AREA

NOTES:

1. SEE DRAWINGS 00-E-001 AND 00-E-002 FOR ELECTRICAL LEGEND, ABBREVIATIONS AND NOTES.
2. SEE DRAWING 00-I-701 FOR FIBRE OPTIC CABLE REQUIREMENT.
3. ALL CIRCUITS SHOWN ON THIS DRAWING WITHOUT THE DUCT SYMBOL SHALL BE FIELD ROUTED BY ELECTRICAL CONTRACTOR. ELECTRICAL CONTRACTOR TO DETERMINE IF THE CONDUITS SHALL BE BELOW GROUND OR ABOVE GROUND.
4. 24V DC POWER CIRCUIT, 24V DC DIGITAL CIRCUITS AND 24V DC ANALOG CIRCUITS MAY BE COMBINED INTO THE SAME CONDUIT AS LONG AS THE CONDUIT FILL MEETS THE NEC REQUIREMENTS.

90% SUBMITTAL - NOT FOR CONSTRUCTION

NO.	BY	CHK	APP	DATE	REVISIONS AND RECORD OF USE
B	JSL	TJZ	MJK	3/31/2020	90% SUBMITTAL
A	JSL	MJK	EVB	7/30/2019	60% SUBMITTAL

No. E 17748

BLACK & VEATCH
JOINT VENTURE
FILANC
BLACK & VEATCH

CITY OF MORRO BAY
MORRO BAY WRF
RECLAMATION FACILITY (WRF)

TREATMENT AREA
ELECTRICAL
31-CTRL-LCP-0001 ONE-LINE DIAGRAM

DESIGNED: JSL
DETAILED: SBC
CHECKED: TJZ
APPROVED: MJK
DATE: 3/31/2020

0 1/2 1
IF THIS BAR DOES NOT MEASURE 1" THEN DRAWING IS NOT TO FULL SCALE

PROJECT NO.
400530

31-E-712
SHEET
OF

FB9000A
D400530
PLOTTED: 3/27/2020 7:47 AM FILE: C:\PWBatchPDF\Process\400530 - Morro Bay WRF\400530-31-E-712.dwg

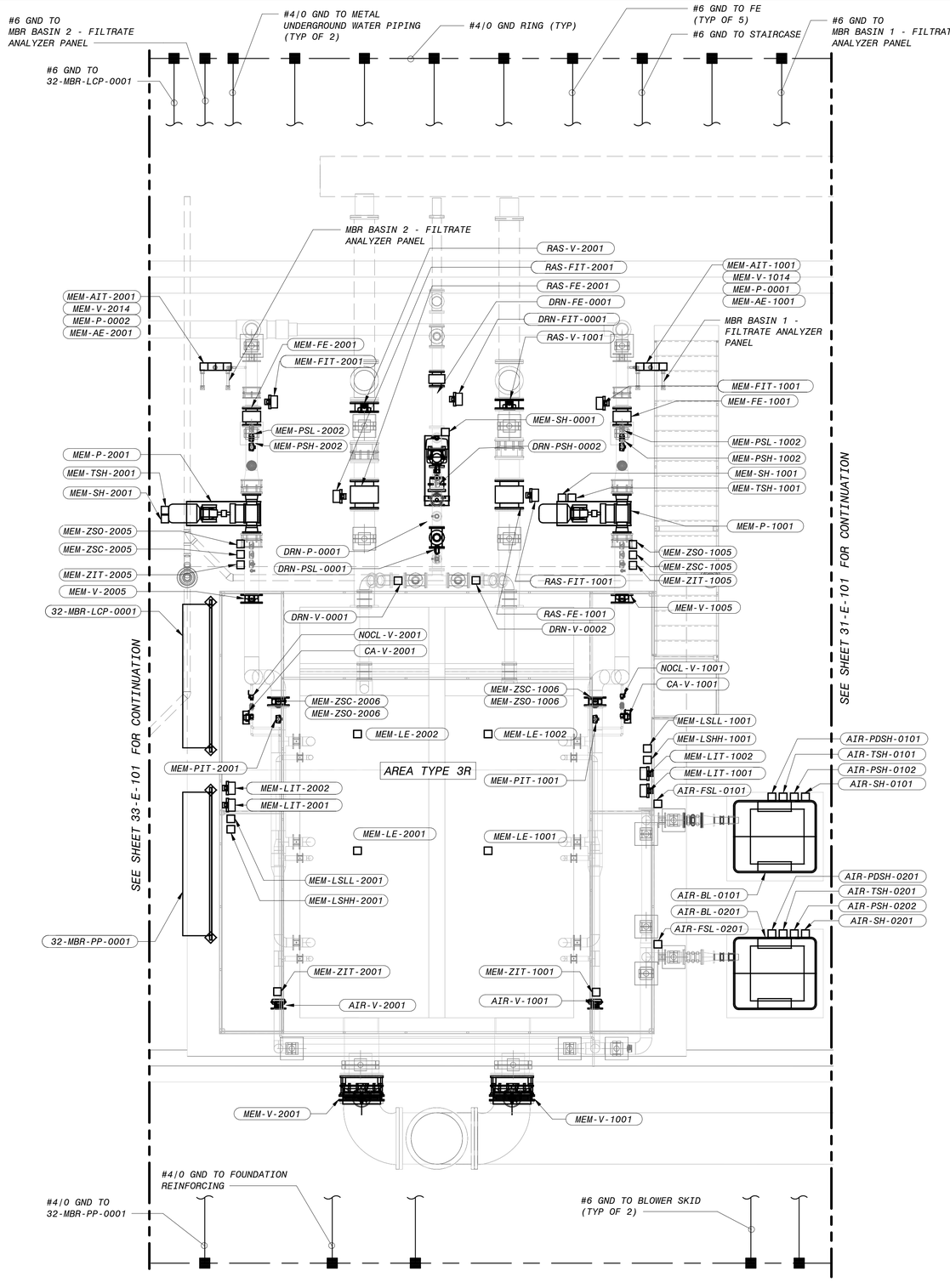

TREATMENT AREA - MBR SYSTEM POWER AND GROUNDING PLAN

1/4" = 1'-0"

NOTES:

1. SEE DRAWING 00-E-001 AND 00-E-002 FOR ELECTRICAL LEGENDS, ABBREVIATIONS AND NOTES.
2. SEE DRAWING 10-E-100 FOR OVERALL ELECTRICAL SITE PLAN.
3. PROVIDE AT LEAST TWO #4/0 GROUND TO EACH OF THE METAL TANKS.
4. FOR CABLE DUCT BANK ENTRY REFER TO SITE OVERALL POWER PLAN (10-E-100).
5. ALL THE TAGS ARE PRECEDED BY AREA CODE 32 UNLESS OTHERWISE NOTED.

NO.	BY	CHK	APP	DATE	REVISIONS AND RECORD OF USE
B	JSL	TJZ	MJK	3/31/2020	90% SUBMITTAL
A	JSL	MJK	EVB	7/30/2019	60% SUBMITTAL

REGISTERED PROFESSIONAL ENGINEER
MARK J. KLEVEER
No. E 17748
ELECTRICAL
STATE OF CALIFORNIA

BLACK & VEATCH

JOINT VENTURE

BLACK & VEATCH

FILANC

CITY OF MORRO BAY
MORRO BAY WATER
RECLAMATION FACILITY (WRF)

TREATMENT AREA - MBR SYSTEM
ELECTRICAL
POWER AND GROUNDING PLAN

DESIGNED:	JSL
DETAILED:	SBC
CHECKED:	TJZ
APPROVED:	MJK
DATE:	3/31/2020

0 1/2 1

IF THIS BAR DOES NOT MEASURE 1" THEN DRAWING IS NOT TO FULL SCALE

PROJECT NO.
400530

32-E-101
SHEET
OF

4' 2' 0' 4' 8'

1/4" = 1'-0"

90% SUBMITTAL- NOT FOR CONSTRUCTION

PLOTTED: 27-03-2020 18:06:45
D400530

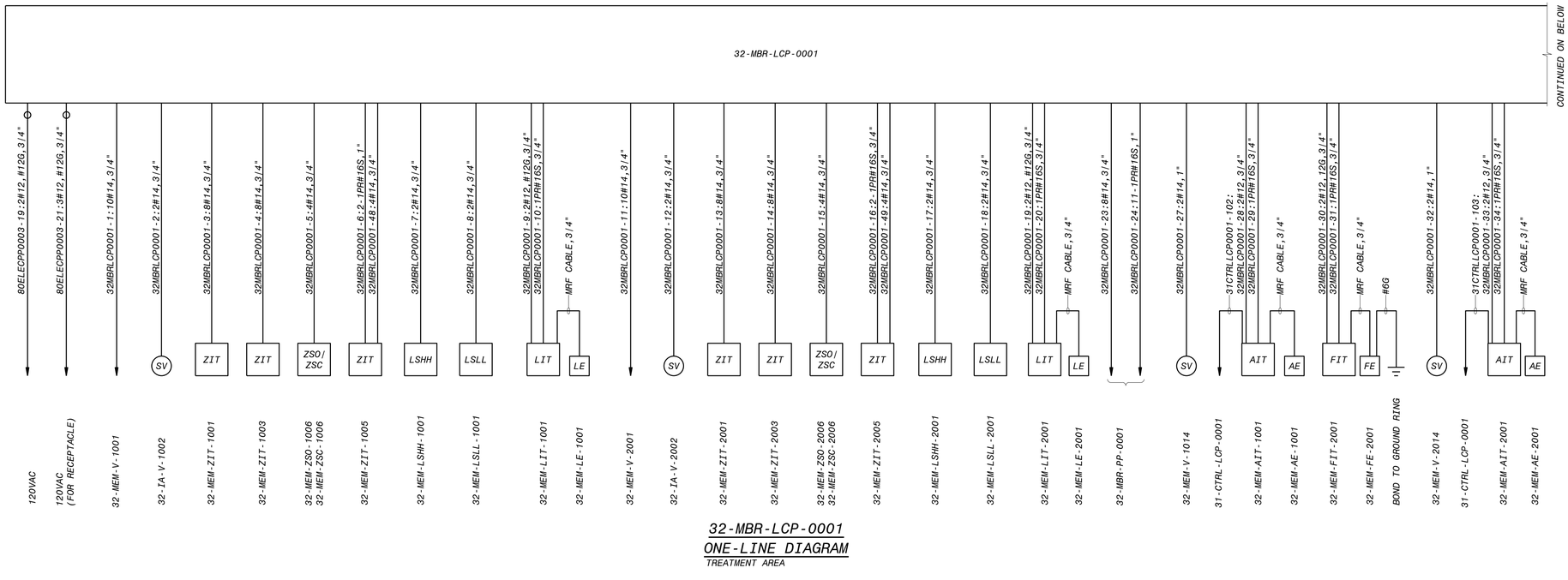

32-MBR-LCP-0001
ONE-LINE DIAGRAM
TREATMENT AREA

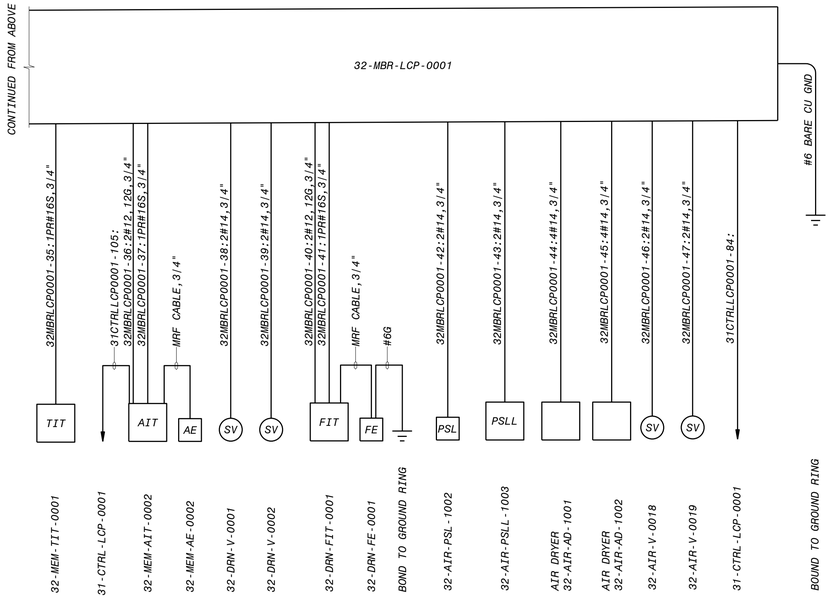

32-MBR-LCP-0001
ONE-LINE DIAGRAM
TREATMENT AREA

NOTES:

1. SEE DRAWINGS 00-E-001 AND 00-E-002 FOR ELECTRICAL LEGEND, ABBREVIATIONS AND NOTES.
2. ALL CIRCUITS SHOWN ON THIS DRAWING WITHOUT THE DUCT SYMBOL SHALL BE FIELD ROUTED BY ELECTRICAL CONTRACTOR. ELECTRICAL CONTRACTOR TO DETERMINE IF THE CONDUITS SHALL BE BELOW GROUND OR ABOVE GROUND.
3. POWER SUPPLY TO SHALL BE DERIVED FROM 32-MBR-PP-0001.
4. 24V DC POWER CIRCUIT, 24V DC DIGITAL CIRCUITS AND 24V DC ANALOG CIRCUITS MAY BE COMBINED INTO THE SAME CONDUIT AS LONG AS THE CONDUIT FILL MEETS THE NEC REQUIREMENTS.

90% SUBMITTAL - NOT FOR CONSTRUCTION

NO.	BY	CHK	APP	DATE	REVISIONS AND RECORD OF USE
A	JSL	TJZ	MJK	3/31/2020	90% SUBMITTAL

No. E 17748

BLACK & VEATCH

JOINT VENTURE

FILANC

BLACK & VEATCH

CITY OF MORRO BAY
MORRO BAY WRF
RECLAMATION FACILITY (WRF)

TREATMENT AREA
ELECTRICAL
32-MBR-PLC-0001 ONE-LINE DIAGRAM

DESIGNED: JSL
DETAILED: SBC
CHECKED: TJZ
APPROVED: MJK
DATE: 3/31/2020

0 1/2 1
IF THIS BAR DOES NOT MEASURE 1" THEN DRAWING IS NOT TO FULL SCALE

PROJECT NO.
400530

32-E-711
SHEET
OF

FB9000A
D400530
PLOTTED: 3/27/2020 7:47 AM FILE: C:\PWBatchPDF\Process\400530 - Morro Bay WRF\400530-32-E-711.dwg

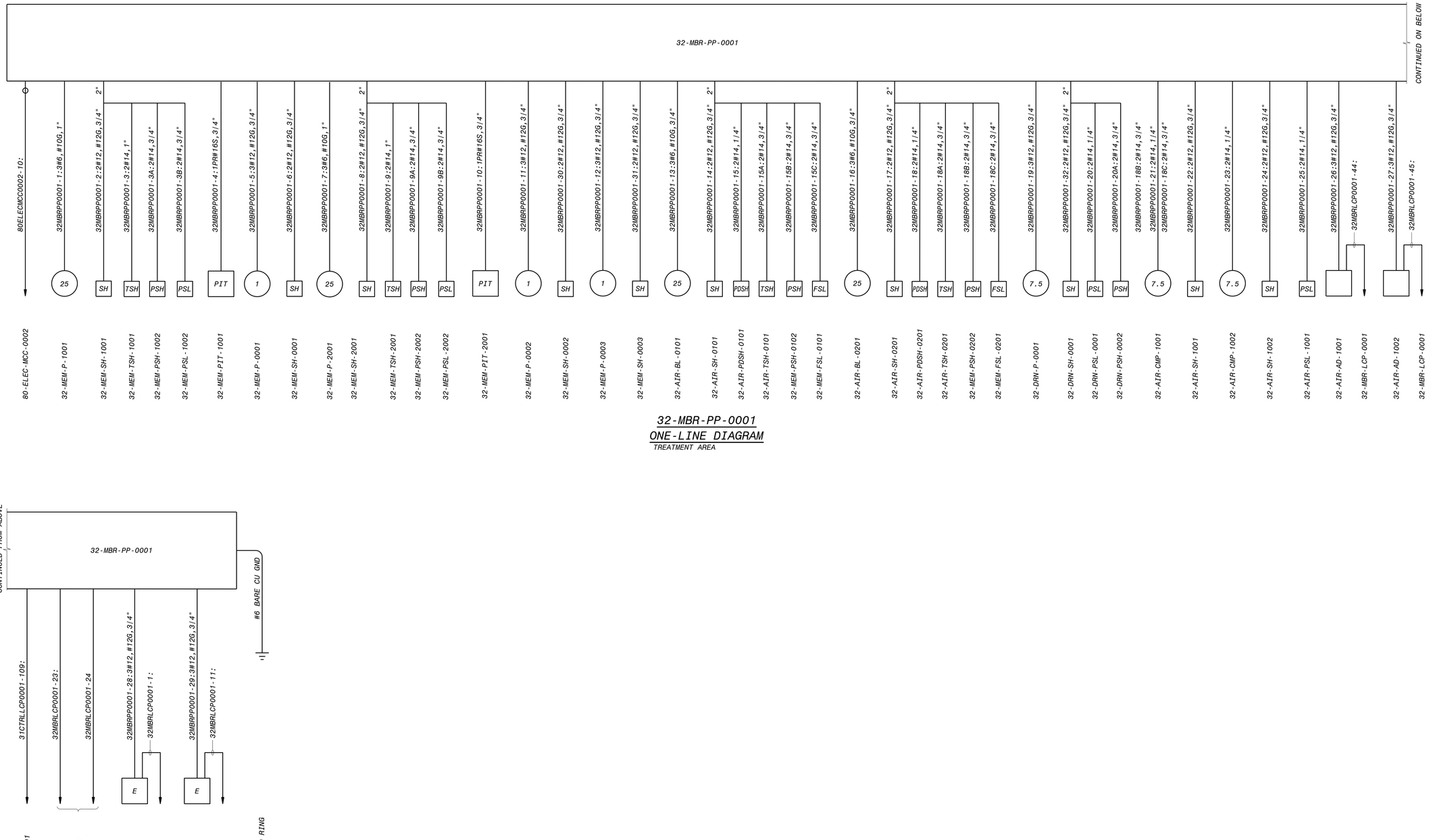

32-MBR-PP-0001
ONE-LINE DIAGRAM
TREATMENT AREA

32-MBR-PP-0001
ONE-LINE DIAGRAM
TREATMENT AREA

NOTES:

1. SEE DRAWINGS 00-E-001 AND 00-E-002 FOR ELECTRICAL LEGEND, ABBREVIATIONS AND NOTES.
2. SEE DRAWING 00-I-701 FOR FIBRE OPTIC CABLE REQUIREMENT.
3. ALL CIRCUITS SHOWN ON THIS DRAWING WITHOUT THE DUCT SYMBOL SHALL BE FIELD ROUTED BY ELECTRICAL CONTRACTOR. ELECTRICAL CONTRACTOR TO DETERMINE IF THE CONDUITS SHALL BE BELOW GROUND OR ABOVE GROUND.
4. 24V DC POWER CIRCUIT, 24V DC DIGITAL CIRCUITS AND 24V DC ANALOG CIRCUITS MAY BE COMBINED INTO THE SAME CONDUIT AS LONG AS THE CONDUIT FILL MEETS THE NEC REQUIREMENTS.

90% SUBMITTAL - NOT FOR CONSTRUCTION

NO.	BY	CHK	APP'D	DATE	REVISIONS AND RECORD OF USE
A	JSL	TJZ	MJK	3/31/2020	90% SUBMITTAL

No. E 17748

BLACK & VEATCH
JOINT VENTURE
BLACK & VEATCH
FILANC

CITY OF MORRO BAY
MORRO BAY WRF
RECLAMATION FACILITY (WRF)

TREATMENT AREA
ELECTRICAL
32-MBR-PP-0001 ONE-LINE DIAGRAM

DESIGNED: JSL
DETAILED: SBC
CHECKED: TJZ
APPROVED: MJK
DATE: 3/31/2020

0 1/2 1
IF THIS BAR DOES NOT MEASURE 1" THEN DRAWING IS NOT TO FULL SCALE

PROJECT NO.
400530

32-E-712
SHEET
OF

FB9000A
D400530
PLOTTED: 3/27/2020 7:48 AM FILE: C:\PWBatchPDF\Process\400530 - Morro Bay WRF\400530-32-E-712.dwg

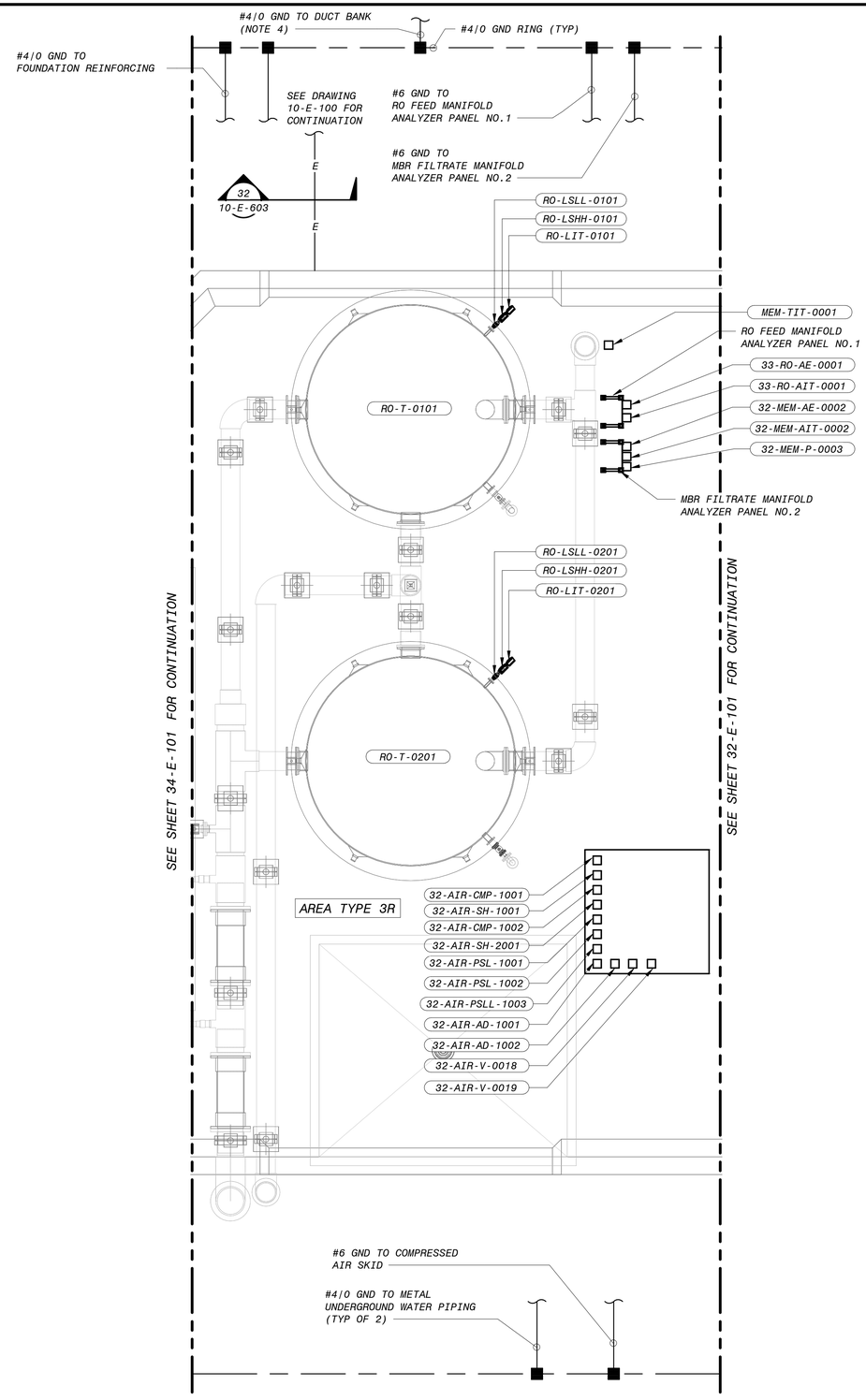

TREATMENT AREA - RO FEED TANKS POWER AND GROUNDING PLAN

1/4" = 1'-0"

NOTES:

1. SEE DRAWING 00-E-001 AND 00-E-002 FOR ELECTRICAL LEGENDS, ABBREVIATIONS AND NOTES.
2. SEE DRAWING 10-E-100 FOR OVERALL ELECTRICAL SITE PLAN.
3. PROVIDE AT LEAST TWO #4/0 GROUND TO EACH OF THE METAL TANKS.
4. FOR CABLE DUCT BANK ENTRY REFER TO SITE OVERALL POWER PLAN (10-E-100).
5. ALL THE TAGS ARE PRECEDED BY AREA CODE 33 UNLESS OTHERWISE NOTED.
6. SEE DRAWING 10-E-603 FOR DUCT BANK SECTION.

4' 2' 0' 4' 8'

1/4" = 1'-0"

90% SUBMITTAL - NOT FOR CONSTRUCTION

NO.	BY	CHK	APP	DATE	REVISIONS AND RECORD OF USE
B	JSL	TJZ	MJK	3/31/2020	90% SUBMITTAL
A	JSL	MJK	EVB	7/30/2019	60% SUBMITTAL

REGISTERED PROFESSIONAL ENGINEER
MARK J. KLEVETER
No. E 17748
ELECTRICAL
STATE OF CALIFORNIA

BLACK & VEATCH

JOINT VENTURE

FILANC

BLACK & VEATCH

CITY OF MORRO BAY
MORRO BAY WATER
RECLAMATION FACILITY (WRF)

TREATMENT AREA - RO FEED TANKS
ELECTRICAL
POWER AND GROUNDING PLAN

DESIGNED: JSL
DETAILED: SBC
CHECKED: TJZ
APPROVED: MJK
DATE: 3/31/2020

0 1/2 1
IF THIS BAR DOES NOT MEASURE 1" THEN DRAWING IS NOT TO FULL SCALE

PROJECT NO.
400530

33-E-101
SHEET
OF

PLOTTED: 27-03-2020 18:06:46
D400530

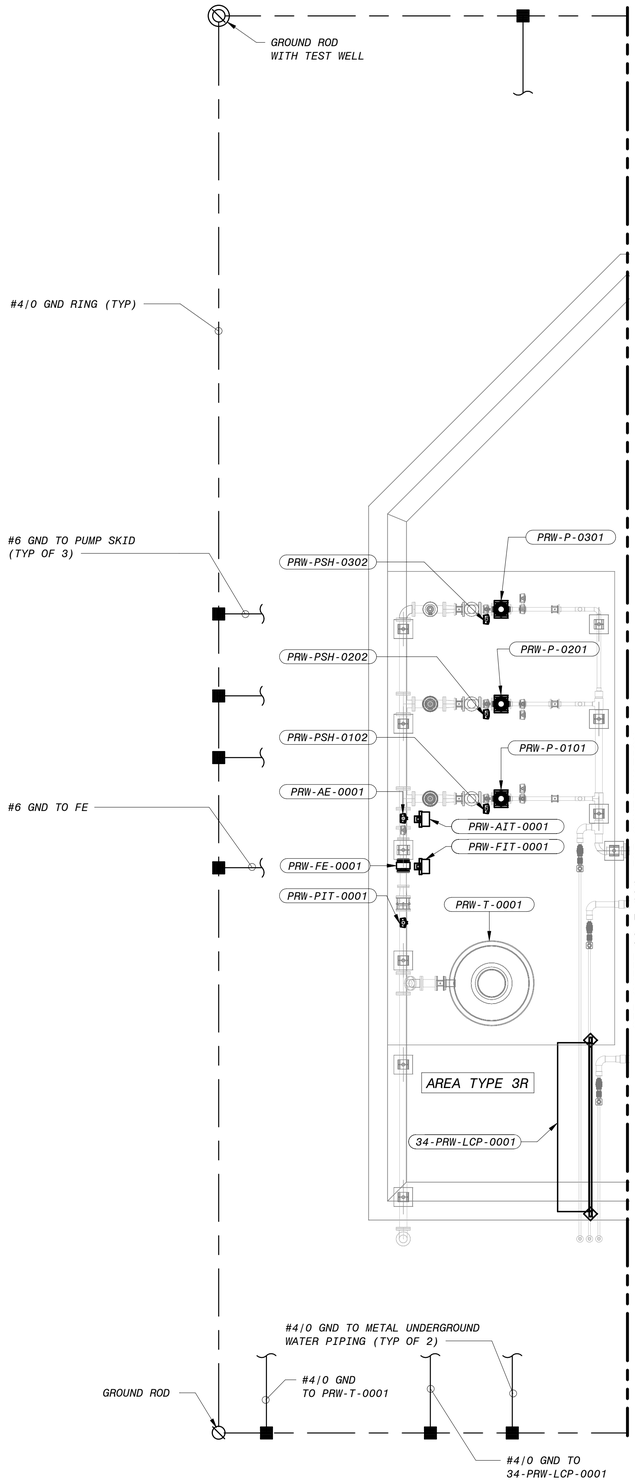

TREATMENT AREA - RECYCLED WATER PUMPS POWER AND GROUNDING PLAN

1/4" = 1'-0"

NOTES:

1. SEE DRAWING 00-E-001 AND 00-E-002 FOR ELECTRICAL LEGENDS, ABBREVIATIONS AND NOTES.
2. SEE DRAWING 10-E-100 FOR OVERALL ELECTRICAL SITE PLAN.
3. PROVIDE AT LEAST TWO #4/0 GROUND TO EACH OF THE METAL TANKS.
4. FOR CABLE DUCT BANK ENTRY REFER TO SITE OVERALL POWER PLAN (10-E-100).
5. ALL THE TAGS ARE PRECEDED BY AREA CODE 34 UNLESS OTHERWISE NOTED.

4' 2' 0' 4' 8'

1/4" = 1'-0"

90% SUBMITTAL- NOT FOR CONSTRUCTION

NO.	BY	CHK	APP	DATE	REVISIONS AND RECORD OF USE
A	JSL	MJK	EVB	7/30/2019	60% SUBMITTAL
B	JSL	TJZ	MJK	3/31/2020	90% SUBMITTAL

REGISTERED PROFESSIONAL ENGINEER
MARK J. KLEVETER
No. E 17748
ELECTRICAL
STATE OF CALIFORNIA

BLACK & VEATCH
JOINT VENTURE
BLACK & VEATCH
FILANC

CITY OF MORRO BAY
MORRO BAY WATER
RECLAMATION FACILITY (WRF)

TRAETMENT AREA - RECYCLED WATER PUMPS
ELECTRICAL
POWER AND GROUNDING PLAN

DESIGNED: JSL
DETAILED: SBC
CHECKED: TJZ
APPROVED: MJK
DATE: 3/31/2020

0 1/2 1
IF THIS BAR DOES NOT MEASURE 1" THEN DRAWING IS NOT TO FULL SCALE

PROJECT NO.
400530

34-E-101
SHEET
OF

PLOTTED: 27-03-2020 18:06:47
D400530

			PANELBOARD: 50-ELEC-PP-0001		BUS: COPPER				MAINS: 3P-100A MAIN BREAKER			
PHASE			SERVICE: 120/208V, 3PH, 4W		RATING: 100A				LOCATION: RO ELECTRICAL ROOM	PHASE		
"A"	"B"	"C"	MOUNTING: SURFACE							"A"	"B"	"C"
V.A.	V.A.	V.A.	LOAD	P	BKR	CKT #		BKR	P	LOAD	V.A.	V.A.	V.A.
2000			51-CTRL-LCP-0001	1	30	1	2	20	1	51-RO-TCP-0001	500		
	500		51-RO-P-0001 - RO SAMPLE PUMP LCP	1	20	3	4	20	1	51-RO-LCP-0101		250	
		250	51-RO-LCP-0201	1	20	5	6	20	1	51-RO-LCP-0301			250
500			50-PLUM-GWH-0001	1	20	7	8	30	1	51-RO-LCP-0001	2000		
	500		52-UV-LCP-0001	1	20	9	10	20	1	SODIUM HYPOCHLORITE UNLOADING PANEL		500	
		500	64-TW-LCP-0001	1	20	11	12	20	1	SODIUM HYPDROXIDE UNLOADING PANEL			500
2000			90-CTRL-LCP-0001	1	30	13	14	20	1	90-NOCL-LCP-0101, 90-NOCL-LCP-0201	500		
	500		90-NOCL-LCP-0301, 90-NOCL-LCP-0401	1	20	15	16	20	1	90-NOCL-LCP-0501, 90-NOCL-LCP-0601		500	
		250	90-NOCL-LCP-0701	1	20	17	18	20	1	90-NAOH-LCP-0101, 90-NAOH-LCP-0201			500
350			90-NAOH-LCP-0301, 90-NAOH-FSH-0001	1	20	19	20	20	1	90-NHS-LCP-0001, 90-NHS-FSH-0001	350		
	350		90-ANTI-LCP-0001, 90-ANTI-FSH-0001	1	20	21	22	20	1	90-CA-LCP-0101, 90-CA-LCP-0201, 90-CA-FSH-0001		600	
		600	90-HSO4-LCP-0101, 90-HSO4-LCP-0201, 90-HSO4-FSH-0001	1	20	23	24	20	1	90-LAS-LCP-0001,90-LAS-FSH-0001			350
1036			50-HVAC-GUH-0001, 50-HVAC-GUH-0002	1	20	25	26	20	1	OPERATOR HMI	500		
	1036		50-HVAC-GUH-0003, 50-HVAC-GUH-0004	1	20	27	28	20	1	IPR PRODUCT WATER ANALYZER PANEL		500	
		500	RO FEED ANALYZER PANEL	1	20	29	30	20	1	51-CTRL-LCP-0001 (RECEPTACLE)			500
500			90-CTRL-LCP-0001(RECEPTACLE)	1	20	31	32	20	1	90-NOCL-FSH-0001	100		
	250		50-PLUM-TP-0001	1	20	33	34	20	1	90-NPW-V-0001, 90-NPW-V-0002		1036	
		1036	90-NPW-V-0003, 90-NPW-V-0004	1	20	35	36	20	1	RO FLUSH PUMPS LCP (51-RO-LCP-0002)			250
250			RO CIP PUMPS LCP (51-RO-LCP-0003)	1	20	37	38	20	2	50-HVAC-EUH-0001	259		
	100		51-CIP-FSH-0001	1	20	39	40	20	-			259	
		500	51-RO-LCP-0001 (RECEPTACLE)	1	20	41	42	20	1	62-TW-LCP-0001			500
6636			TOTAL "A"			10845				TOTAL "A"	4209		
	3236		TOTAL "B"			6881				TOTAL "B"		3645	
		3636	TOTAL "C"			6486				TOTAL "C"			2850
			TOTAL			24213							

50-ELEC-PP-0001
POWER PANEL SCHEDULE
RO/UV BUILDING

			PANELBOARD: 50-ELEC-PP-0002		BUS: COPPER				MAINS: 3P-100A MAIN BREAKER			
PHASE			SERVICE: 480V 3PH, 3W		RATING: 100A				LOCATION: RO ELECTRICAL ROOM	PHASE		
"A"	"B"	"C"	MOUNTING: SURFACE							"A"	"B"	"C"
V.A.	V.A.	V.A.	LOAD	P	BKR	CKT #		BKR	P	LOAD	V.A.	V.A.	V.A.
345	345	345	51-RO-V-0012	3	20	1	2	20	3	SPARE	0	0	0
0	0	0	SPARE	3	20	3	4	20	3	50-HVAC-EF-0001	259	259	259
0	0	0	SPARE	3	20	5	6	20	3	50-HVAC-EF-0002	259	259	259
345	345	345	61-CAL-V-0001	3	20	7	8	30	3	50-HVAC-PHP-0001	4157	4157	4157
0	0	0	SPARE	3	20	9	10	20	3	SPARE	0	0	0
345	345	345	51-CIP-V-0103	3	20	11	12	20	3	51-RO-V-0013	345	345	345
0	0	0	SPARE	3	20	13	14	20	3	SPARE	0	0	0
0	0	0	SPARE	3	20	15	16	20	3	SPARE	0	0	0
0	0	0	SPARE	3	20	17	18	20	3	SPARE	0	0	0
0	0	0	SPARE	3	20	19	20	20	3	SPARE	0	0	0
0	0	0	SPARE	3	20	21	22	20	3	SPARE	0	0	0
0	0	0	SPARE	3	20	23	24	20	3	SPARE	0	0	0
0	0	0	SPARE	3	30	25	26	20	3	SPARE	0	0	0
0	0	0	SPARE	3	30	27	28	20	3	SPARE	0	0	0
1035			TOTAL "A"			6055				TOTAL "A"	5020		
	1035		TOTAL "B"			6055				TOTAL "B"		5020	
		1035	TOTAL "C"			6055				TOTAL "C"			5020
			TOTAL			18166							

50-ELEC-PP-0002
POWER PANEL SCHEDULE
RO/UV BUILDING

NOTES:

1. SEE DRAWINGS 00-E-001 AND 00-E-002 FOR ELECTRICAL LEGEND, ABBREVIATIONS AND NOTES.
2. PROVIDE MINIMUM #12, #12G CABLE AND 3/4" CONDUIT FOR 20A CIRCUIT; MINIMUM #8, #10G CABLE AND 3/4" CONDUIT FOR 30A CIRCUIT.

90% SUBMITTAL - NOT FOR CONSTRUCTION

NO.	BY	CHK	APP'D
B	JSL	MAS	MJK
A	JSL	MJK	EVB

REVISIONS AND RECORD OF USE

DATE	
3/31/2020	90% SUBMITTAL
7/30/2019	60% SUBMITTAL

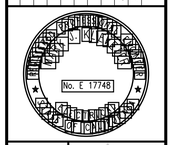

BLACK & VEATCH
JOINT VENTURE
BLACK & VEATCH
FILANC

CITY OF MORRO BAY
MORRO BAY WRF
RECLAMATION FACILITY (WRF)

RO/UV BUILDING
ELECTRICAL
POWER PANEL SCHEDULES

DESIGNED: JSL
DETAILED: SBC
CHECKED: MAS
APPROVED: MJK
DATE: 3/31/2020

0 1/2 1
IF THIS BAR DOES NOT MEASURE 1" THEN DRAWING IS NOT TO FULL SCALE

PROJECT NO.
400530

50-E-601
SHEET
OF

FB9000A
D400530
PLOTTED: 3/31/2020 9:45 AM FILE: C:\pw_working\bvw_americas\d0683637\400530-50-E-601.dwg

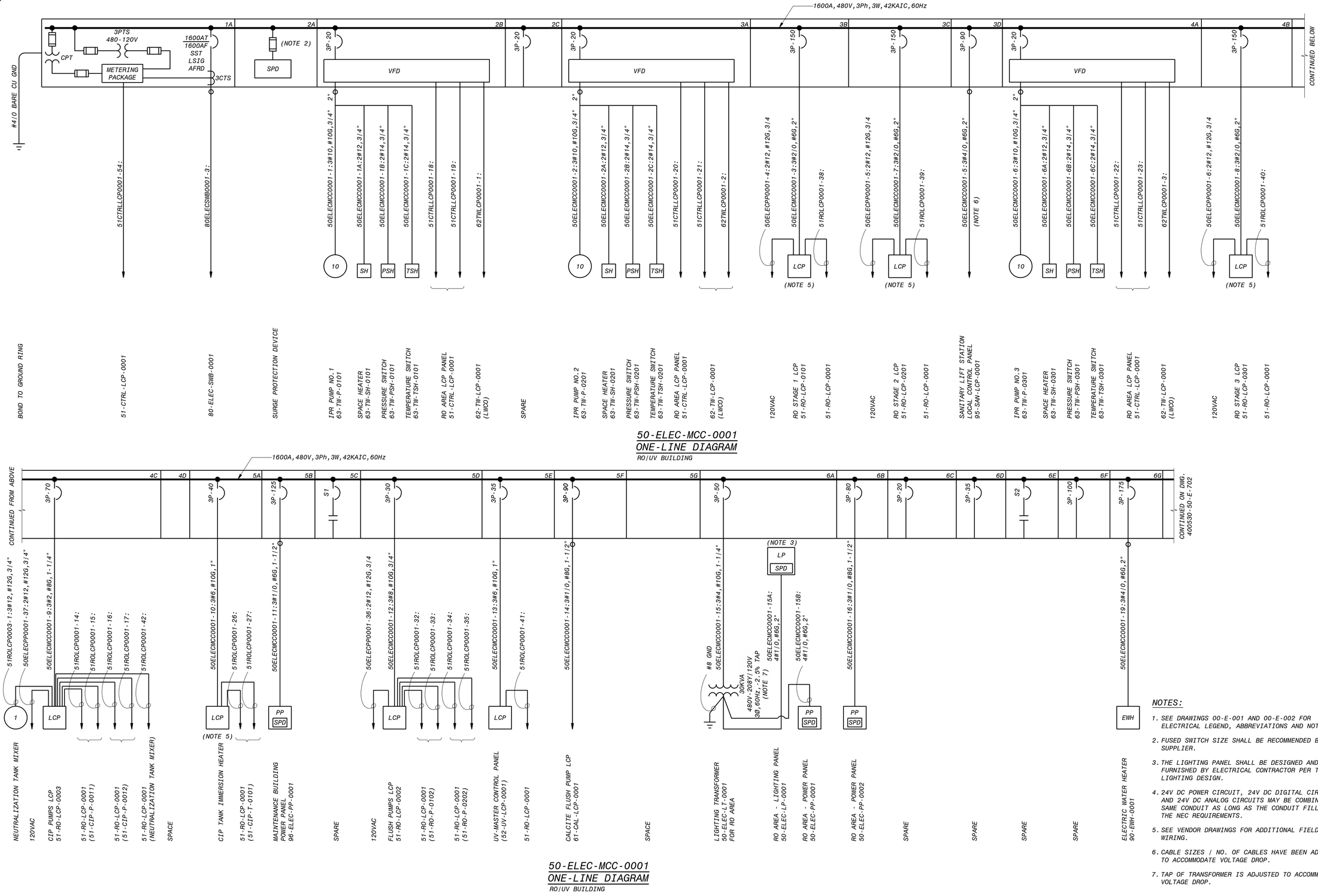

50-ELEC-MCC-0001 ONE-LINE DIAGRAM

RO/UV BUILDING

50-ELEC-MCC-0001 ONE-LINE DIAGRAM

RO/UV BUILDING

NOTES:

1. SEE DRAWINGS 00-E-001 AND 00-E-002 FOR ELECTRICAL LEGEND, ABBREVIATIONS AND NOTES.
2. FUSED SWITCH SIZE SHALL BE RECOMMENDED BY MCC SUPPLIER.
3. THE LIGHTING PANEL SHALL BE DESIGNED AND FURNISHED BY ELECTRICAL CONTRACTOR PER THEIR LIGHTING DESIGN.
4. 24V DC POWER CIRCUIT, 24V DC DIGITAL CIRCUITS AND 24V DC ANALOG CIRCUITS MAY BE COMBINED INTO SAME CONDUIT AS LONG AS THE CONDUIT FILL MEETS THE NEC REQUIREMENTS.
5. SEE VENDOR DRAWINGS FOR ADDITIONAL FIELD WIRING.
6. CABLE SIZES / NO. OF CABLES HAVE BEEN ADJUSTED TO ACCOMMODATE VOLTAGE DROP.
7. TAP OF TRANSFORMER IS ADJUSTED TO ACCOMMODATE VOLTAGE DROP.

90% SUBMITTAL - NOT FOR CONSTRUCTION

NO.	BY	CHK	APP	DATE	REVISIONS AND RECORD OF USE
B	JSL	MAS	MJK	3/31/2020	90% SUBMITTAL
A	JSL	MJK	EVB	7/30/2019	60% SUBMITTAL

BLACK & VEATCH

JOINT VENTURE

FILANC

BLACK & VEATCH

CITY OF MORRO BAY
MORRO BAY WRF
RECLAMATION FACILITY (WRF)

RO/UV BUILDING
ELECTRICAL
50-ELEC-MCC-0001 ONE-LINE DIAGRAM

DESIGNED: JSL
DETAILED: SBC
CHECKED: MAS
APPROVED: MJK
DATE: 3/31/2020

0 1/2 1
IF THIS BAR DOES NOT MEASURE 1" THEN DRAWING IS NOT TO FULL SCALE

PROJECT NO. 400530

50-E-701
SHEET OF

FB0000A
D400530
PLOTTED: 3/30/2020 11:45 AM FILE: C:\pw_working\bvw_americas\d068363\400530-50-E-701.dwg

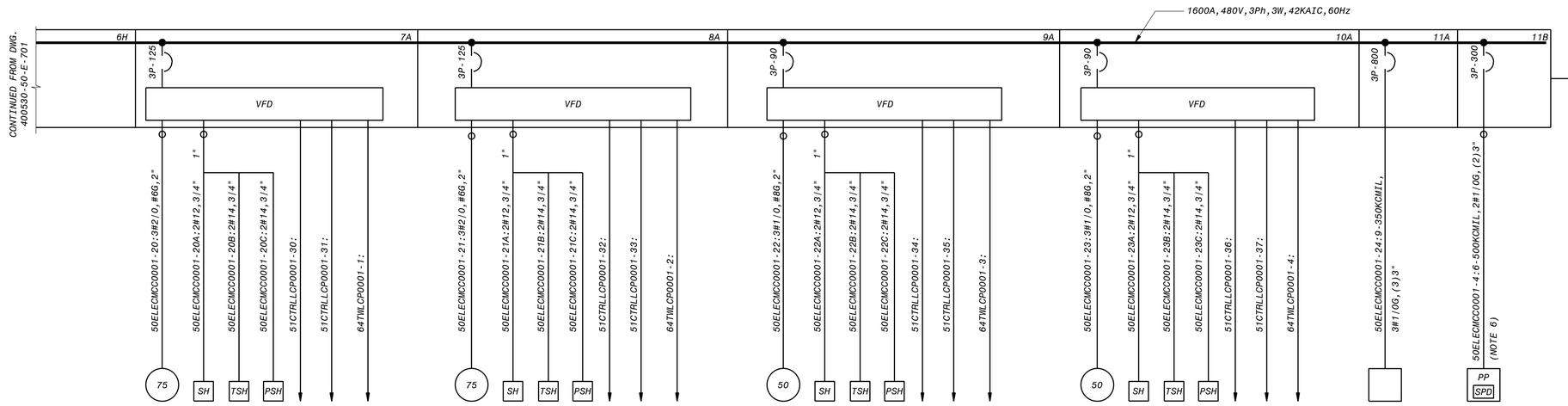

50-ELEC-MCC-0001
ONE-LINE DIAGRAM
RO/UV BUILDING

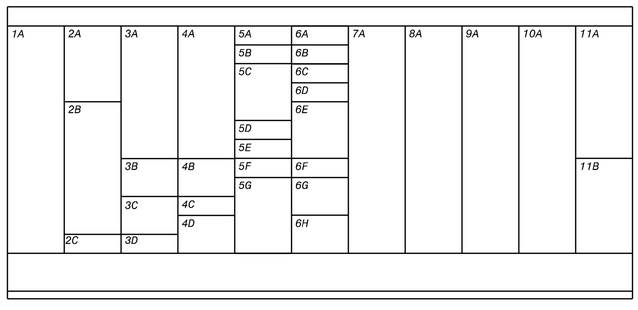

50-ELEC-MCC-0001
FRONT ELEVATION
RO/UV BUILDING

NOTES:

1. SEE DRAWINGS 00-E-001 AND 00-E-002 FOR ELECTRICAL LEGEND, ABBREVIATIONS AND NOTES.
2. FUSED SWITCH SIZE SHALL BE RECOMMENDED BY MCC SUPPLIER.
3. THE LIGHTING PANEL SHALL BE DESIGNED AND FURNISHED BY ELECTRICAL CONTRACTOR PER THEIR LIGHTING DESIGN.
4. 24V DC POWER CIRCUIT, 24V DC DIGITAL CIRCUITS AND 24V DC ANALOG CIRCUITS MAY BE COMBINED INTO SAME CONDUIT AS LONG AS THE CONDUIT FILL MEETS THE NEC REQUIREMENTS.
5. SEE VENDOR DRAWINGS FOR ADDITIONAL FIELD WIRING.
6. CABLE SIZES / NO. OF CABLES HAVE BEEN ADJUSTED TO ACCOMMODATE VOLTAGE DROP.
7. TAP OF TRANSFORMER IS ADJUSTED TO ACCOMMODATE VOLTAGE DROP.

90% SUBMITTAL - NOT FOR CONSTRUCTION

NO.	BY	CHK	APP
B	JSL	MAS	MJK
A	JSL	MJK	EVB

DATE	REVISIONS AND RECORD OF USE
3/31/2020	90% SUBMITTAL
7/30/2019	60% SUBMITTAL

No. E 17748

BLACK & VEATCH

JOINT VENTURE

FILANC

BLACK & VEATCH

CITY OF MORRO BAY
MORRO BAY WRF
RECLAMATION FACILITY (WRF)

RO/UV BUILDING
ELECTRICAL
50-ELEC-MCC-0001 ONE-LINE DIAGRAM

DESIGNED:	JSL
DETAILED:	SBC
CHECKED:	MAS
APPROVED:	MJK
DATE:	3/31/2020

0 1/2 1
IF THIS BAR DOES NOT MEASURE 1" THEN DRAWING IS NOT TO FULL SCALE

PROJECT NO.
400530

50-E-702
SHEET
OF

FB0000A
D400530
PLOTTED: 3/30/2020 11:48 AM FILE: C:\pw_working\bvw_americas\d0683637\400530-50-E-702.dwg

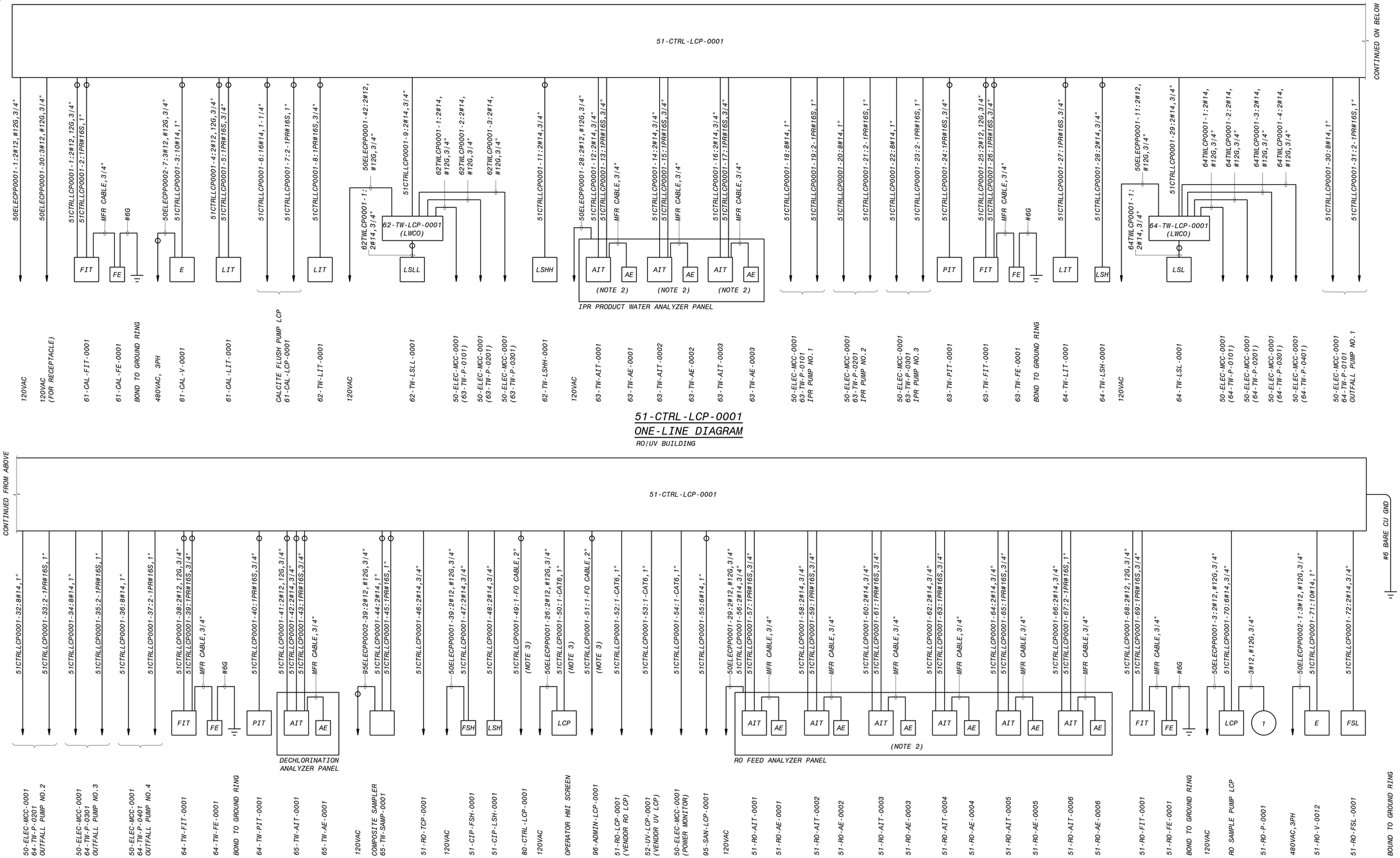

51-CTRL-LCP-0001
ONE-LINE DIAGRAM
RO/UV BUILDING

51-CTRL-LCP-0001
ONE-LINE DIAGRAM
RO/UV BUILDING

NOTES:

1. SEE DRAWINGS 00-E-001 AND 00-E-002 FOR ELECTRICAL LEGEND, ABBREVIATIONS AND NOTES.
2. POWER SUPPLY TO THE ANALYZERS SHALL BE DERIVED FROM ANALYZER PANEL.
3. SEE 00-I-701 FOR FIBER OPTIC CABLE REQUIREMENT.
4. ALL CIRCUITS SHOWN ON THIS DRAWING WITHOUT THE DUCT SYMBOL SHALL BE FIELD ROUTED BY ELECTRICAL CONTRACTOR. ELECTRICAL CONTRACTOR TO DETERMINE IF THE CONDUITS SHALL BE BELOW GROUND OR ABOVE GROUND.

90% SUBMITTAL - NOT FOR CONSTRUCTION

NO.	BY	CHK	APP	DATE	REVISIONS AND RECORD OF USE
B	JSL	MAS	MJK	3/31/2020	90% SUBMITTAL
A	JSL	MJK	EVB	7/30/2019	60% SUBMITTAL

No. E 17748

BLACK & VEATCH

JOINT VENTURE

FILANC

BLACK & VEATCH

CITY OF MORRO BAY
MORRO BAY WRF
RECLAMATION FACILITY (WRF)

RO/UV BUILDING
ELECTRICAL
51-CTR-LCP-0001 ONE-LINE DIAGRAM

DESIGNED: JSL
DETAILED: SBC
CHECKED: MAS
APPROVED: MJK
DATE: 3/31/2020

0 1/2 1
IF THIS BAR DOES NOT MEASURE 1" THEN DRAWING IS NOT TO FULL SCALE

PROJECT NO.
400530

50-E-711
SHEET
OF

FB0000A
D400530
PLOTTED: 3/27/2020 7:49 AM FILE: C:\PWBatchPDF\Process\400530 - Morro Bay WRF\400530-50-E-711.dwg

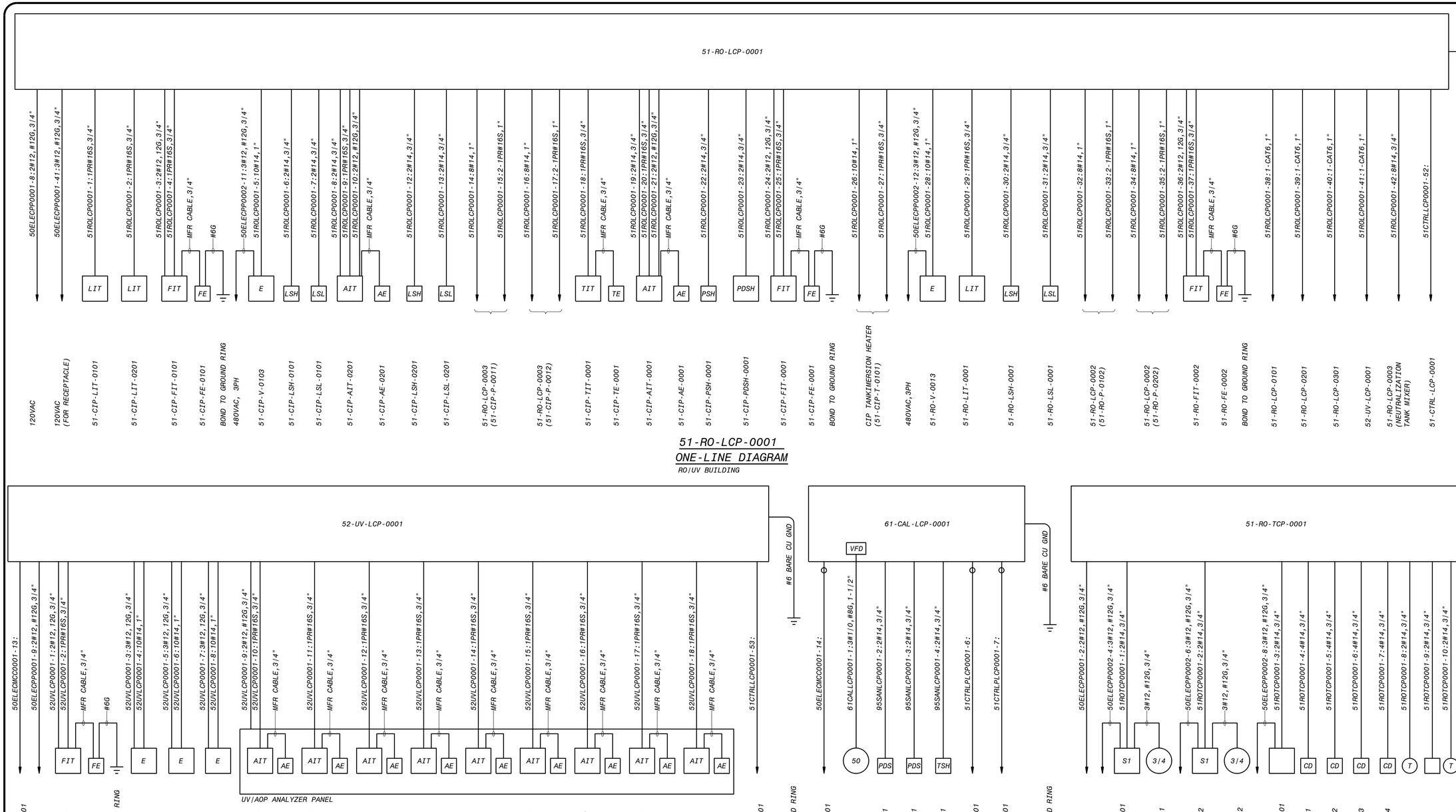

51-RO-LCP-0001
ONE-LINE DIAGRAM
RO/UV BUILDING

52-UV-LCP-0001
ONE-LINE DIAGRAM
RO/UV BUILDING

61-CAL-LCP-0001
ONE-LINE DIAGRAM
RO/UV BUILDING

51-RO-TCP-0001
ONE-LINE DIAGRAM
RO/UV BUILDING

NOTES:

1. SEE DRAWINGS 00-E-001 AND 00-E-002 FOR ELECTRICAL LEGEND, ABBREVIATIONS AND NOTES.
2. ALL CIRCUITS SHOWN ON THIS DRAWING WITHOUT THE DUCT SYMBOL SHALL BE FIELD ROUTED BY ELECTRICAL CONTRACTOR. ELECTRICAL CONTRACTOR TO DETERMINE IF THE CONDUITS SHALL BE BELOW GROUND OR ABOVE GROUND.
3. 24V DC POWER CIRCUIT, 24V DC DIGITAL CIRCUITS AND 24V DC ANALOG CIRCUITS MAY BE COMBINED INTO THE SAME CONDUIT AS LONG AS THE CONDUIT FILL MEETS THE NEC REQUIREMENTS.

90% SUBMITTAL - NOT FOR CONSTRUCTION

NO.	BY	CHK	APP
B	JSL	MAS	MJK
A	JSL	MJK	EVB

DATE	REVISIONS AND RECORD OF USE
3/31/2020	90% SUBMITTAL
7/30/2019	60% SUBMITTAL

No. E 17748

BLACK & VEATCH

JOINT VENTURE

FILANC

BLACK & VEATCH

CITY OF MORRO BAY
MORRO BAY WRF
RECLAMATION FACILITY (WRF)

RO/UV BUILDING
ELECTRICAL - 51-RO-LCP-0001 AND MISCELLANEOUS ONE-LINE DIAGRAMS

DESIGNED: JSL
DETAILED: SBC
CHECKED: MAS
APPROVED: MJK
DATE: 3/31/2020

0 1/2 1
IF THIS BAR DOES NOT MEASURE 1" THEN DRAWING IS NOT TO FULL SCALE

PROJECT NO.
400530

50-E-712
SHEET
OF

FB9000A
D400530
PLOTTED: 3/31/2020 10:55 AM FILE: C:\pw_working\bvw_americas\d068363\\400530-50-E-712.dwg

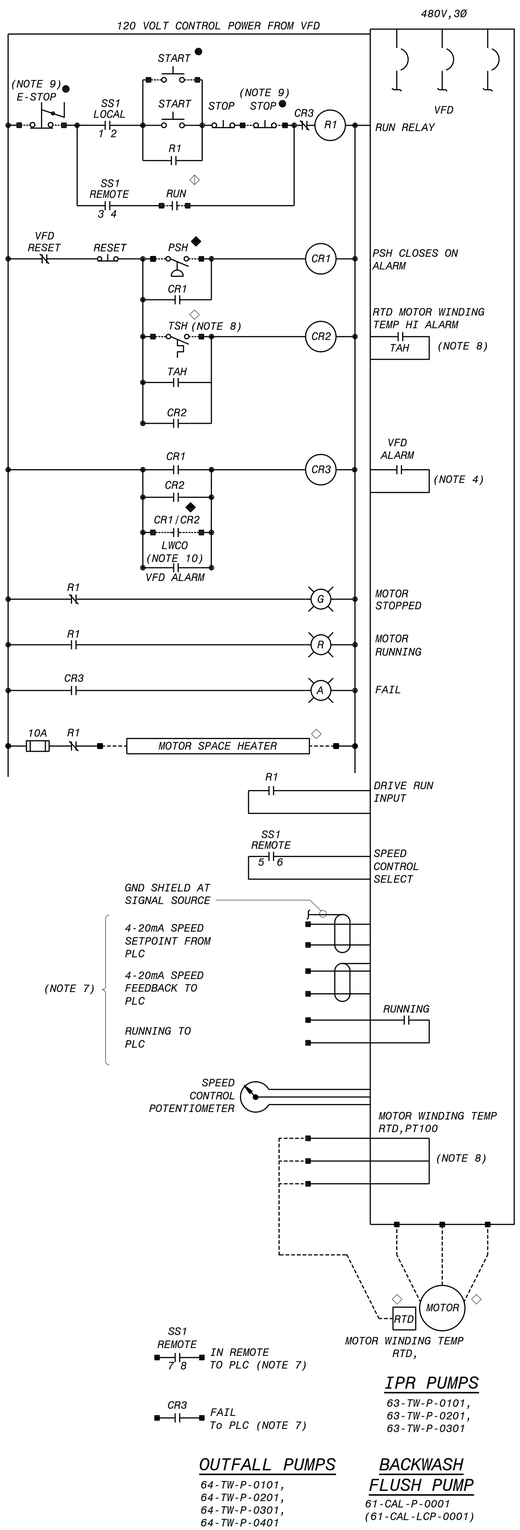

IPR PUMPS

63-TW-P-0101,
63-TW-P-0201,
63-TW-P-0301

OUTFALL PUMPS

64-TW-P-0101,
64-TW-P-0201,
64-TW-P-0301,
64-TW-P-0401

BACKWASH FLUSH PUMP

61-CAL-P-0001
(61-CAL-LCP-0001)

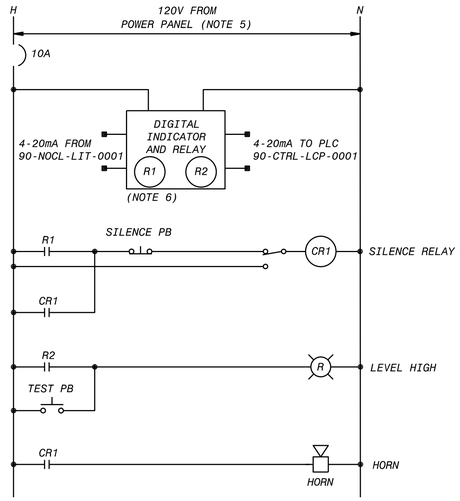

SODIUM HYPOCHLORITE UNLOADING PANEL

(SIMILAR FOR SODIUM HYDROXIDE UNLOADING PANEL)

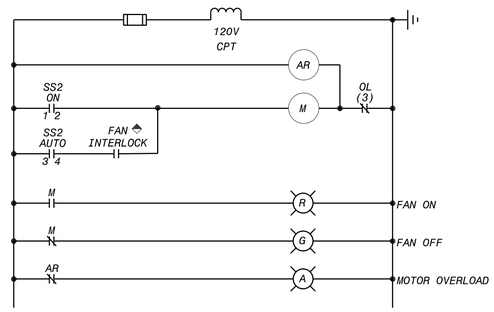

EXHAUST FANS

50-HVAC-EF-0001,
50-HVAC-EF-0002,
96-HVAC-EF-0003,
96-HVAC-EF-0004

DUCT FAN

95-HVAC-DF-0001,
96-HVAC-DF-0001

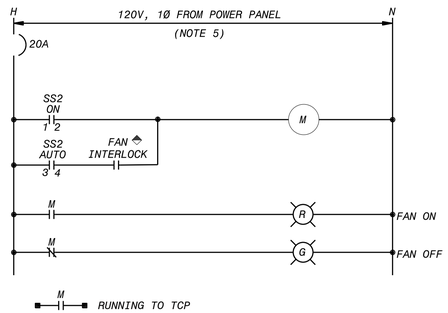

EXHAUST FANS

96-HVAC-DF-0002,
96-HVAC-DF-0003

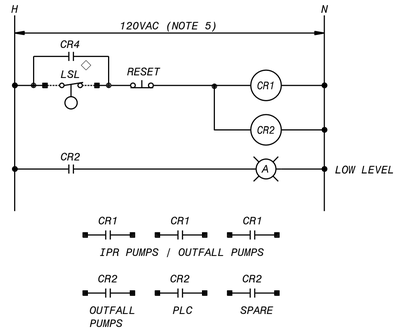

LWCO

62-TW-LCP-0001
64-TW-LCP-0001

SS1 SWITCH DEVELOPMENT

CONTACTS	POSITION		
	LOCAL	OFF	REMOTE
1-2	X		
3-4			X
5-6			X
7-8			X

SS2 SWITCH DEVELOPMENT

CONTACTS	POSITION		
	ON	OFF	AUTO
1-2	X		
3-4			X

LEGEND:

- AT VALVE
- AT DRIVEN EQUIPMENT
- AT PLC/RIO PANEL
- REMOTE FROM STARTER AND DRIVEN EQUIPMENT
- AT CONTROL STATION
- AT DRIVE
- AT TCP

NOTES:

1. SEE DRAWINGS 00-E-001 AND 00-E-002 FOR ELECTRICAL LEGEND, ABBREVIATIONS AND NOTES.
2. DEVICES SHOWN IN SCHEMATICS WITHOUT A SYMBOL ARE LOCATED AT THE MOTOR STARTER OR CONTROLLER.
3. PROVIDE ONE N.O AND N.C SPARE INTERLOCKS WITH EACH MOTOR STARTER.
4. ALL ALARM INPUTS SHALL STOP THE PUMP IN ALL CONTROL MODES.
5. REFER TO PANEL SCHEDULES FOR CIRCUIT NUMBER.
6. R1 SHALL BE A PROGRAMMABLE HIGH LEVEL ALARM RELAY WITH MOMENTARY CONTACT AND R2 SHALL BE A PROGRAMMABLE HIGH LEVEL ALARM RELAY WITH MAINTAINED CONTACT.
7. REFER TO P&ID'S FOR PLC TAGS.
8. IF THE MOTOR COMES WITH WINDING RTD THEN USE THE VFD HIGH TEMPERATURE CONTACT FOR THE CR2 RELAY IN LIEU OF THE TSH. VFD SHALL BE PROVIDED WITH MOTOR WINDING RTD INPUT OR THERMOSTAT INTERLOCKS AS PER THE MOTOR SHOP DRAWINGS SUBMITTAL.
9. THE SCHEMATIC SHOWN IS TYPICAL. REFER TO P&IDs OR OTHER ELECTRICAL DRAWINGS FOR E-STOP/START/STOP REQUIREMENTS. IF NO ESTOP AND LOCAL STOP ARE PROVIDED, PROVIDE A JUMPER FOR THE INPUT.
10. TRIP FROM LWCO IS NOT APPLICABLE FOR BACKWASH FLUSH PUMP.

NO.	BY	CHK	APP	DATE	REVISIONS AND RECORD OF USE
B	JSL	MAS	MJK	3/31/2020	90% SUBMITTAL
A	JSL	MJK	EVB	7/30/2019	60% SUBMITTAL

No. E 17748

BLACK & VEATCH
JOINT VENTURE
BLACK & VEATCH
FILANC

CITY OF MORRO BAY
MORRO BAY WRF
RECLAMATION FACILITY (WRF)

RO/UV BUILDING
ELECTRICAL
SCHEMATIC

DESIGNED:	JSL
DETAILED:	SBC
CHECKED:	MAS
APPROVED:	MJK
DATE:	3/31/2020

0 1/2 1
IF THIS BAR DOES NOT MEASURE 1" THEN DRAWING IS NOT TO FULL SCALE

PROJECT NO.
400530

50-E-721
SHEET
0F

90% SUBMITTAL - NOT FOR CONSTRUCTION

FD9000A
D400330
PLOTTED: 3/27/2020 7:50 AM FILE: C:\PWBatchPDF\Process\400530 - Morro Bay WRF\400530-50-E-721.dwg

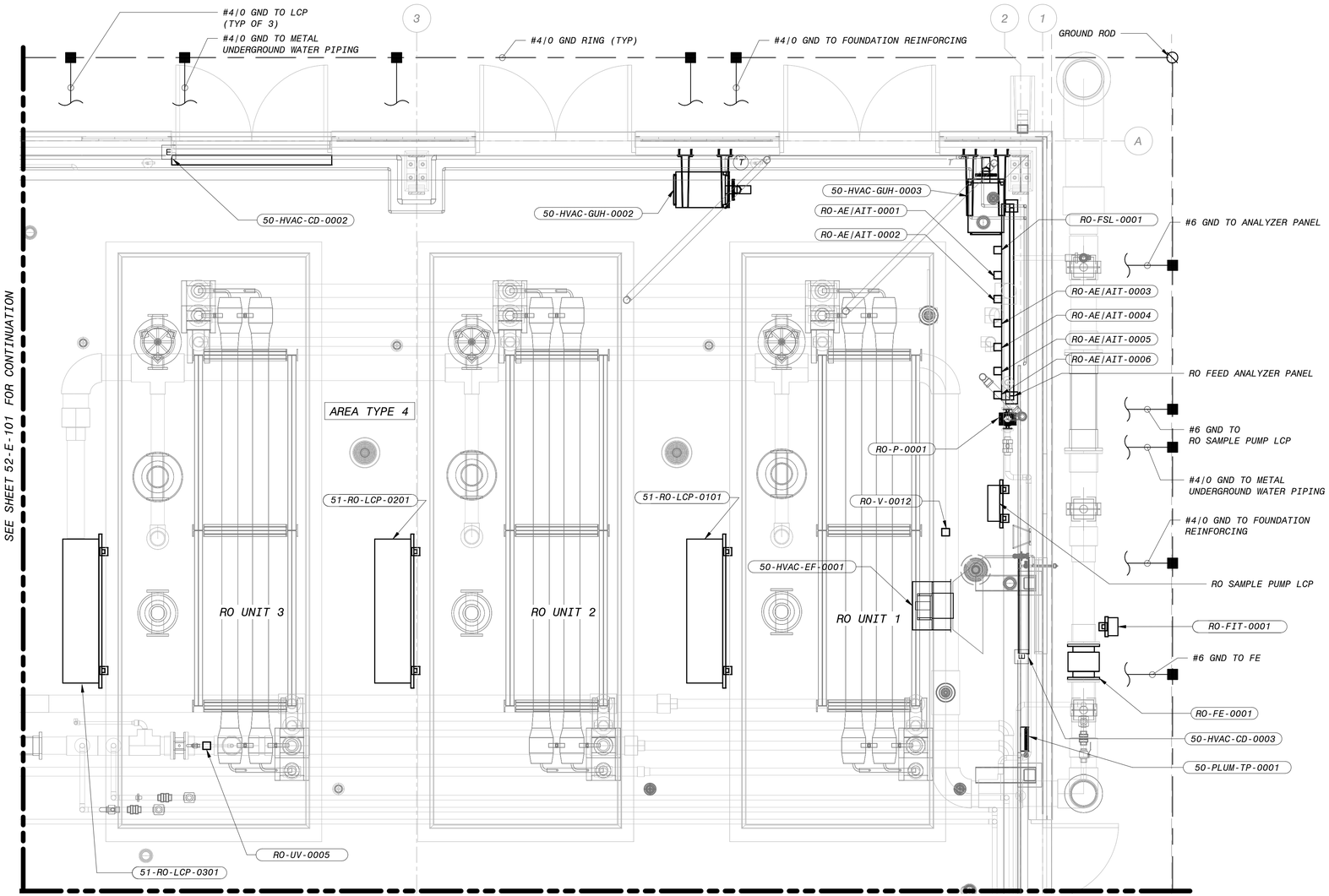

RO/UV BUILDING - RO SYSTEM POWER AND GROUNDING PLAN

3/8" = 1'-0"

NOTES:

1. SEE DRAWING 00-E-001 AND 00-E-002 FOR ELECTRICAL LEGENDS, ABBREVIATIONS AND NOTES.
2. SEE DRAWING 10-E-100 FOR OVERALL ELECTRICAL SITE PLAN.
3. ALL THE TAGS ARE PRECEDED BY AREA CODE 51 UNLESS OTHERWISE NOTED.

NO.	BY	CHK	APP	DATE	REVISIONS AND RECORD OF USE
B	JSL	MAS	MJK	3/31/2020	90% SUBMITTAL
A	JSL	MJK	EVB	7/30/2019	60% SUBMITTAL

REGISTERED PROFESSIONAL ENGINEER
MARK J. KLEVEN
No. E 17748
ELECTRICAL
STATE OF CALIFORNIA

BLACK & VEATCH

JOINT VENTURE

BLACK & VEATCH

FILANC

CITY OF MORRO BAY
MORRO BAY WRF
RECLAMATION FACILITY (WRF)

RO/UV BUILDING - RO SYSTEM
ELECTRICAL
POWER AND GROUNDING PLAN

DESIGNED: JSL
DETAILED: SBC
CHECKED: MAS
APPROVED: MJK
DATE: 3/31/2020

0 1/2 1
IF THIS BAR DOES NOT MEASURE 1" THEN DRAWING IS NOT TO FULL SCALE

12" 0' 1' 2' 3' 4' 5' 6' 7'
3/8" = 1'-0"

PROJECT NO.
400530

51-E-101
SHEET
OF

90% SUBMITTAL- NOT FOR CONSTRUCTION

PLOTTED: 27-03-2020 18:14:27
D400530

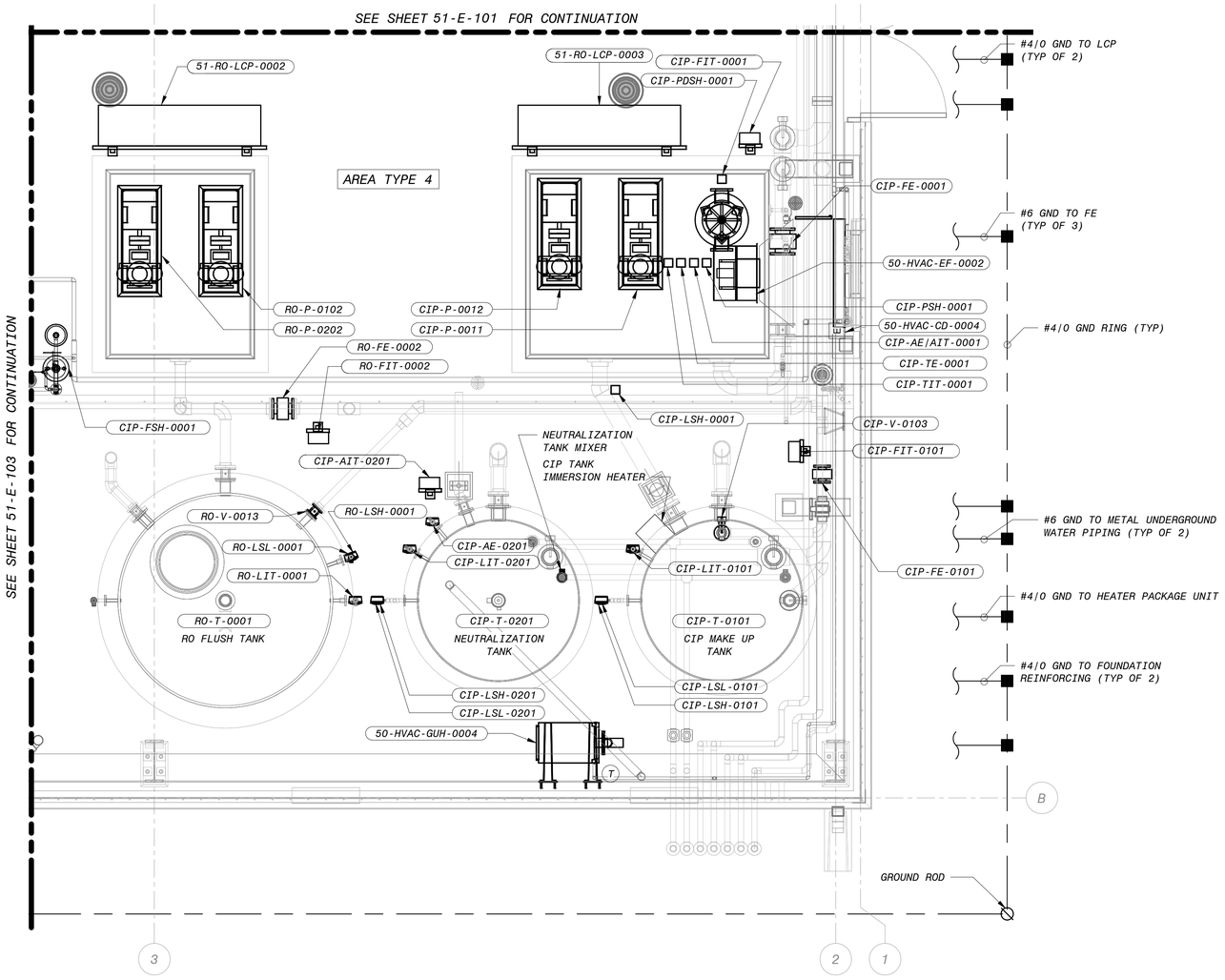

RO/UV BUILDING - RO CIP & FLUSH SYSTEMS POWER & GROUNDING PLAN

3/8" = 1'-0"

NOTES:

1. SEE DRAWING 00-E-001 AND 00-E-002 FOR ELECTRICAL LEGENDS, ABBREVIATIONS AND NOTES.
2. SEE DRAWING 10-E-100 FOR OVERALL ELECTRICAL SITE PLAN.
3. PROVIDE AT LEAST TWO #4/0 GROUND TO EACH OF THE METAL TANKS.
4. ALL THE TAGS ARE PRECEDED BY AREA CODE 51 UNLESS OTHERWISE NOTED.

NO.	BY	CHK	APP	DATE	REVISIONS AND RECORD OF USE
A	JSL	MJK	EVB	7/30/2019	60% SUBMITTAL
B	JSL	MAS	MJK	3/31/2020	90% SUBMITTAL

REGISTERED PROFESSIONAL ENGINEER
MARK J. KLEVEN
No. E 17748
ELECTRICAL
STATE OF CALIFORNIA

BLACK & VEATCH
JOINT VENTURE
BLACK & VEATCH
FILANC

CITY OF MORRO BAY
MORRO BAY WRF
RECLAMATION FACILITY (WRF)

RO/UV BUILDING - RO CIP & FLUSH SYSTEMS
ELECTRICAL
POWER AND GROUNDING PLAN

DESIGNED: JSL
DETAILED: SBC
CHECKED: MAS
APPROVED: MJK
DATE: 3/31/2020

0 1/2 1
IF THIS BAR DOES NOT MEASURE 1" THEN DRAWING IS NOT TO FULL SCALE

12" 0' 1' 2' 3' 4' 5' 6' 7'
3/8" = 1'-0"

PROJECT NO.
400530

51-E-102
SHEET
OF

90% SUBMITTAL- NOT FOR CONSTRUCTION

PLOTTED: 27-03-2020 18:14:28
D400530

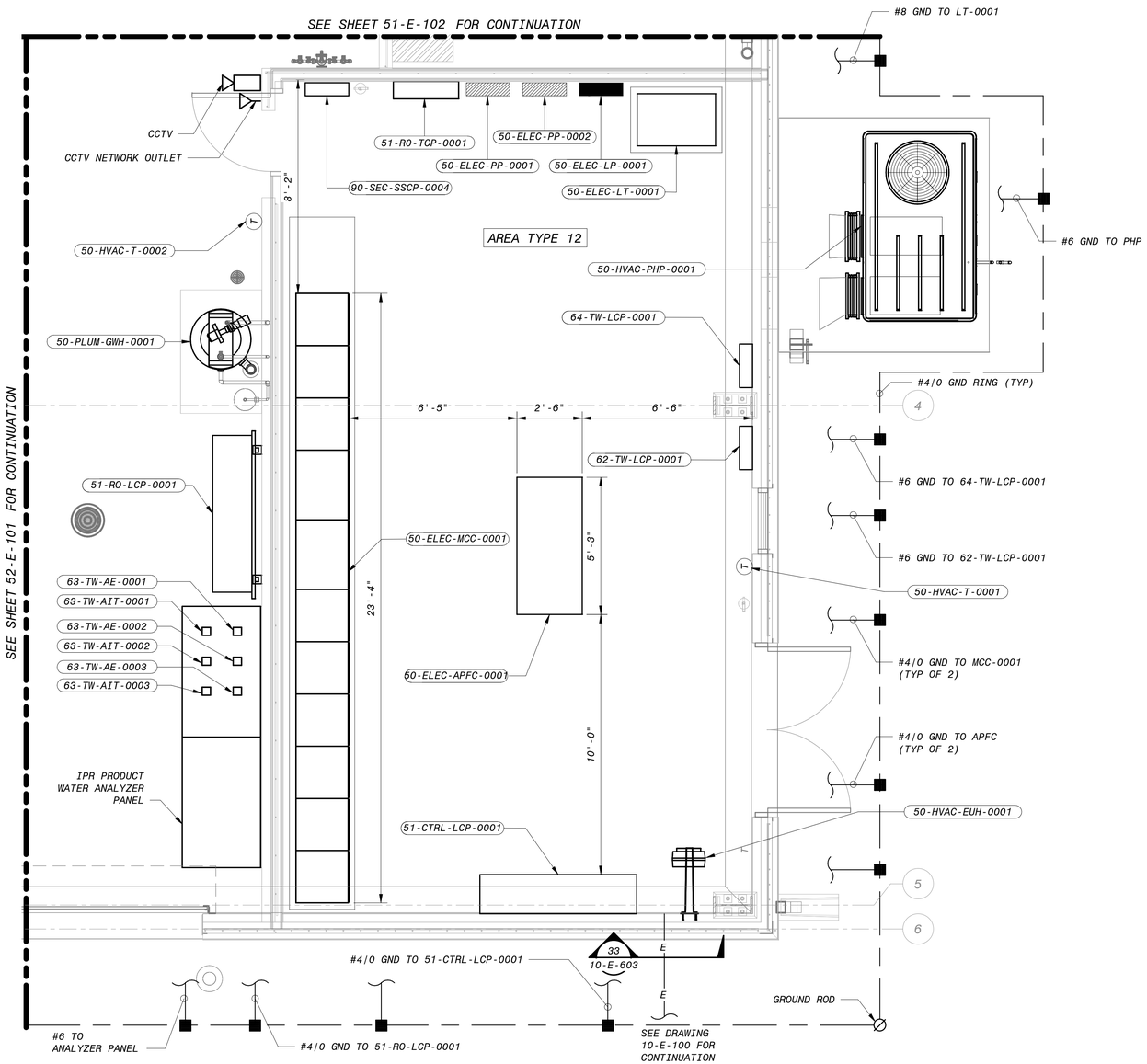

RO ELECTRICAL ROOM POWER AND GROUNDING PLAN

3/8" = 1'-0"

NOTES:

1. SEE DRAWING 00-E-001 AND 00-E-002 FOR ELECTRICAL LEGENDS, ABBREVIATIONS AND NOTES.
2. SEE DRAWING 10-E-100 FOR OVERALL ELECTRICAL SITE PLAN.
3. SEE DRAWING 10-E-603 FOR DUCT BANK SECTION.

NO.	BY	CHK	APP	DATE	REVISIONS AND RECORD OF USE
B	JSL	MAS	MJK	3/31/2020	90% SUBMITTAL
A	JSL	MJK	EVB	7/30/2019	60% SUBMITTAL

REGISTERED PROFESSIONAL ENGINEER
MARK J. KLEVETER
No. E 17748
ELECTRICAL
STATE OF CALIFORNIA

BLACK & VEATCH

JOINT VENTURE

BLACK & VEATCH

FILANC

CITY OF MORRO BAY
MORRO BAY WRF
RECLAMATION FACILITY (WRF)

RO/UV BUILDING - ELECTRICAL ROOM
ELECTRICAL
POWER AND GROUNDING PLAN

DESIGNED: JSL
DETAILED: SBC
CHECKED: MAS
APPROVED: MJK
DATE: 3/31/2020

0 1/2 1
IF THIS BAR DOES NOT MEASURE 1" THEN DRAWING IS NOT TO FULL SCALE

PROJECT NO.
400530

51-E-103
SHEET
OF

12" 0' 1' 2' 3' 4' 5' 6' 7'
3/8" = 1'-0"

90% SUBMITTAL- NOT FOR CONSTRUCTION

PLOTTED: 27-03-2020 18:14:30
D400530

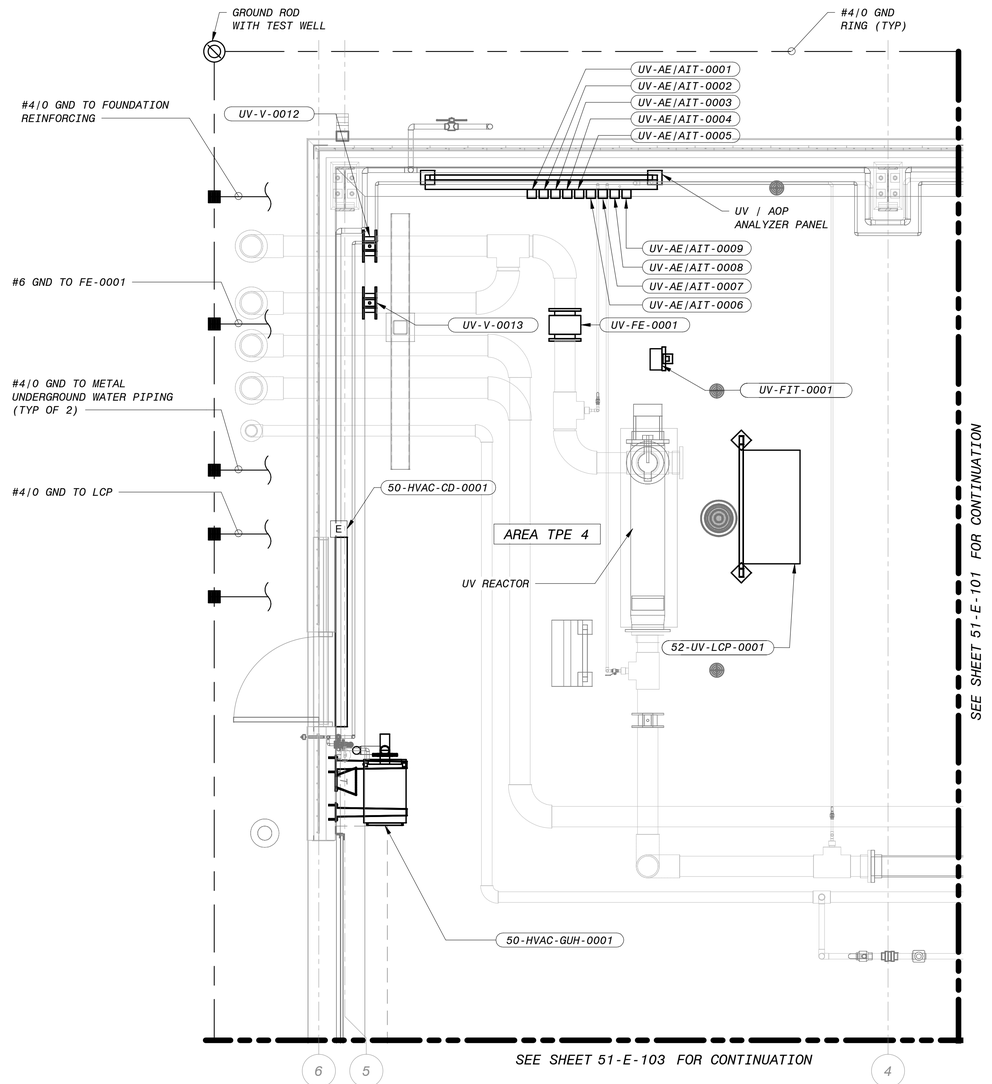

RO/UV BUILDING - UV SYSTEM - REACTOR SYSTEM PLAN

3/8" = 1'-0"

NOTES:

1. SEE DRAWING 00-E-001 AND 00-E-002 FOR ELECTRICAL LEGENDS, ABBREVIATIONS AND NOTES.
2. SEE DRAWING 10-E-100 FOR OVERALL ELECTRICAL SITE PLAN.
3. ALL THE TAGS ARE PRECEDED BY AREA CODE 52 UNLESS OTHERWISE NOTED.

NO.	BY	CHK	APP	DATE	REVISIONS AND RECORD OF USE
				3/31/2020	90% SUBMITTAL
B	JSL	MAS	MJK	7/30/2019	60% SUBMITTAL
A	JSL	MJK	EVB		

REGISTERED PROFESSIONAL ENGINEER
MARK J. KLEVETER
No. E 17748
ELECTRICAL
STATE OF CALIFORNIA

BLACK & VEATCH

JOINT VENTURE

FILANC

BLACK & VEATCH

CITY OF MORRO BAY
MORRO BAY WRF
RECLAMATION FACILITY (WRF)

RO/UV BUILDING - UV SYSTEM
ELECTRICAL
POWER AND GROUNDING PLAN

DESIGNED: JSL
DETAILED: SBC
CHECKED: MAS
APPROVED: MJK
DATE: 3/31/2020

0 1/2 1
IF THIS BAR DOES NOT MEASURE 1" THEN DRAWING IS NOT TO FULL SCALE

PROJECT NO.
400530

52-E-101
SHEET
OF

12" 0' 1' 2' 3' 4' 5' 6' 7'
3/8" = 1'-0"

90% SUBMITTAL- NOT FOR CONSTRUCTION

PLOTTED: 27-03-2020 18:14:30
D400530

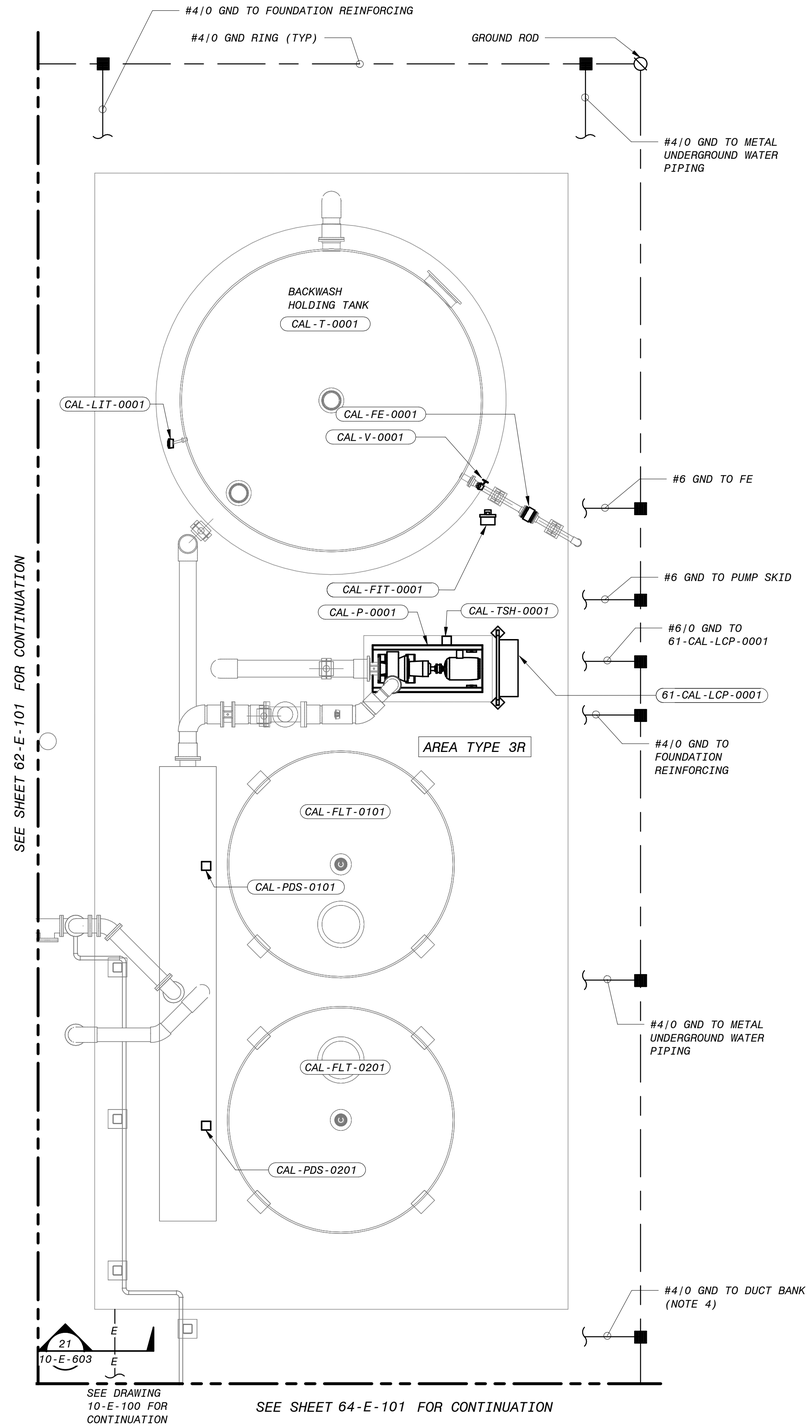

PRODUCT WATER AREA - CALCITE CONTACTOR POWER AND GROUNDING PLAN

1/4" = 1'-0"

KEY PLAN

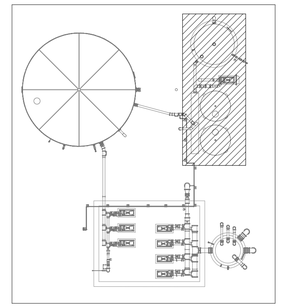

NOTES:

1. SEE DRAWING 00-E-001 AND 00-E-002 FOR ELECTRICAL LEGENDS, ABBREVIATIONS AND NOTES.
2. SEE DRAWING 10-E-100 FOR OVERALL ELECTRICAL SITE PLAN.
3. PROVIDE AT LEAST TWO #4/0 GROUND TO THE METAL TANK.
4. FOR CABLE DUCT BANK ENTRY REFER TO SITE OVERALL POWER PLAN (10-E-100).
5. ALL THE TAGS ARE PRECEDED BY AREA CODE 61 UNLESS OTHERWISE NOTED.
6. SEE DRAWING 10-E-603 FOR DUCT BANK SECTION.

4' 2' 0' 4' 8'

1/4" = 1'-0"

90% SUBMITTAL- NOT FOR CONSTRUCTION

NO.	BY	CHK	APP	DATE	REVISIONS AND RECORD OF USE
B	JSL	MAS	MJK	3/31/2020	90% SUBMITTAL
A	JSL	MJK	EVB	7/30/2019	60% SUBMITTAL

REGISTERED PROFESSIONAL ENGINEER MARK J. KLEVEN No. E 17748 ELECTRICAL CALIFORNIA

BLACK & VEATCH

JOINT VENTURE

BLACK & VEATCH

FILANC

CITY OF MORRO BAY
MORRO BAY WATER RECLAMATION FACILITY (WRF)

PRODUCT WATER AREA - CALCITE CONTACTOR ELECTRICAL POWER AND GROUNDING PLAN

DESIGNED:	JSL
DETAILED:	SBC
CHECKED:	MAS
APPROVED:	MJK
DATE:	3/31/2020

0 1/2 1

IF THIS BAR DOES NOT MEASURE 1" THEN DRAWING IS NOT TO FULL SCALE

PROJECT NO. 400530

61-E-101

SHEET OF

PLOTTED: 27-03-2020 20:47:27
D400530

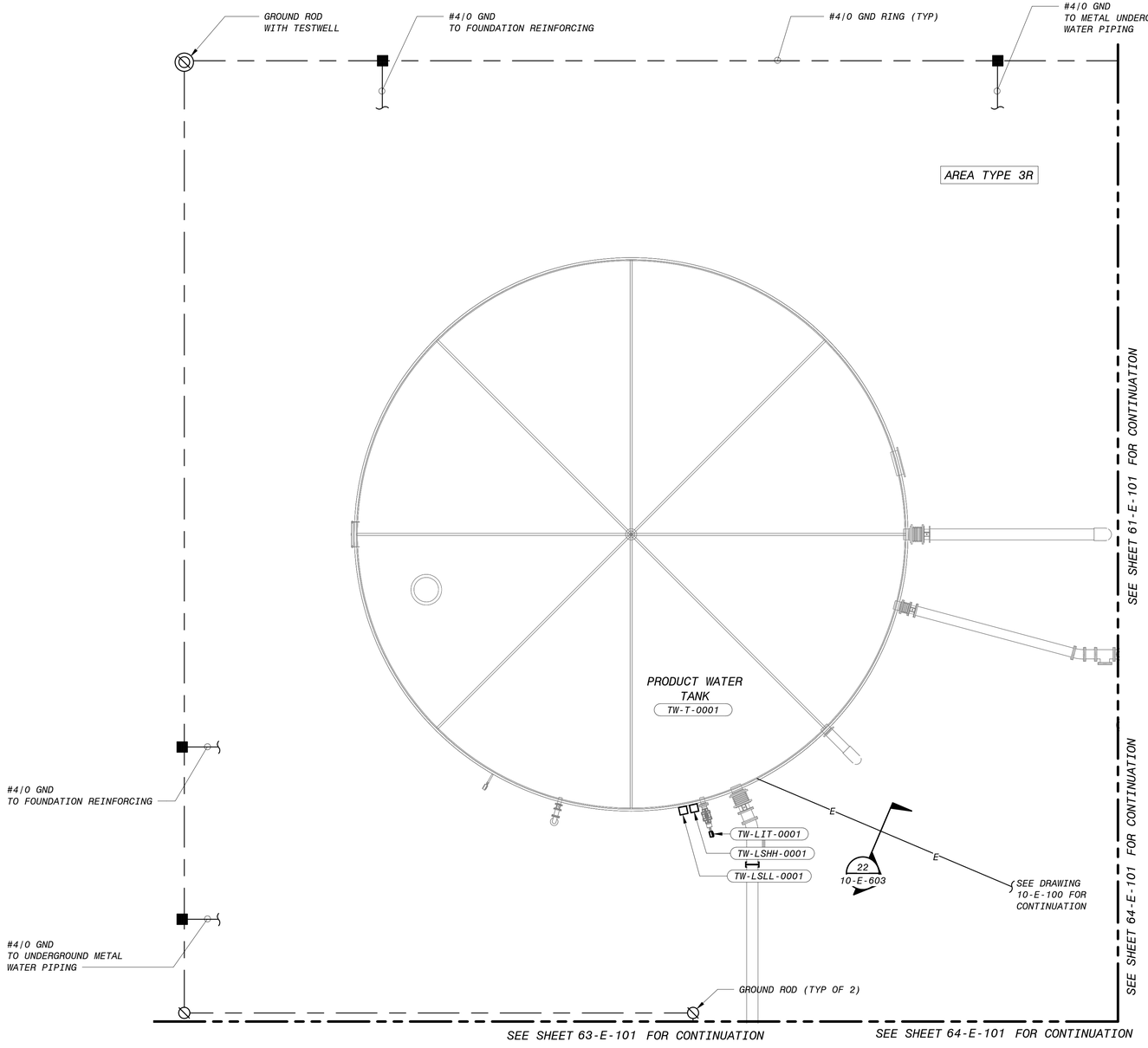

PRODUCT WATER AREA - PRODUCT WATER STORAGE TANK POWER AND GROUNDING PLAN

3/16" = 1'-0"

KEY PLAN

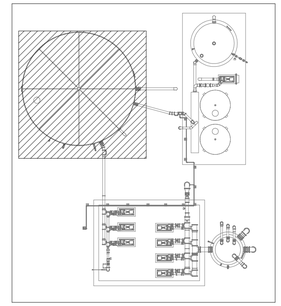

NOTES:

1. SEE DRAWING 00-E-001 AND 00-E-002 FOR ELECTRICAL LEGENDS, ABBREVIATIONS AND NOTES.
2. SEE DRAWING 10-E-100 FOR OVERALL ELECTRICAL SITE PLAN.
3. PROVIDE AT LEAST TWO #4/0 GROUND TO THE METAL TANK.
4. FOR CABLE DUCT BANK ENTRY REFER TO SITE OVERALL POWER PLAN (10-E-100).
5. ALL THE TAGS ARE PRECEDED BY AREA CODE 62 UNLESS OTHERWISE NOTED.

6" 4' 2' 0' 5' 10'

3/16" = 1'-0"

90% SUBMITTAL- NOT FOR CONSTRUCTION

NO.	BY	CHK	APP	DATE	REVISIONS AND RECORD OF USE
B	JSL	MAS	MJK	3/31/2020	90% SUBMITTAL
A	JSL	MJK	EVB	7/30/2019	60% SUBMITTAL

REGISTERED PROFESSIONAL ENGINEER
MARK J. KLEVETER
No. E 17748
ELECTRICAL
STATE OF CALIFORNIA

BLACK & VEATCH

JOINT VENTURE

FILANC

BLACK & VEATCH

CITY OF MORRO BAY
MORRO BAY WATER
RECLAMATION FACILITY (WRF)

PRODUCT WATER AREA
PRODUCT WATER STORAGE TANK - ELECTRICAL
POWER AND GROUNDING PLAN

DESIGNED: JSL
DETAILED: SBC
CHECKED: MAS
APPROVED: MJK
DATE: 3/31/2020

0 1/2 1

IF THIS BAR DOES NOT MEASURE 1" THEN DRAWING IS NOT TO FULL SCALE

PROJECT NO.
400530

62-E-101
SHEET
OF

PLOTTED: 27-03-2020 20:51:17
D400530

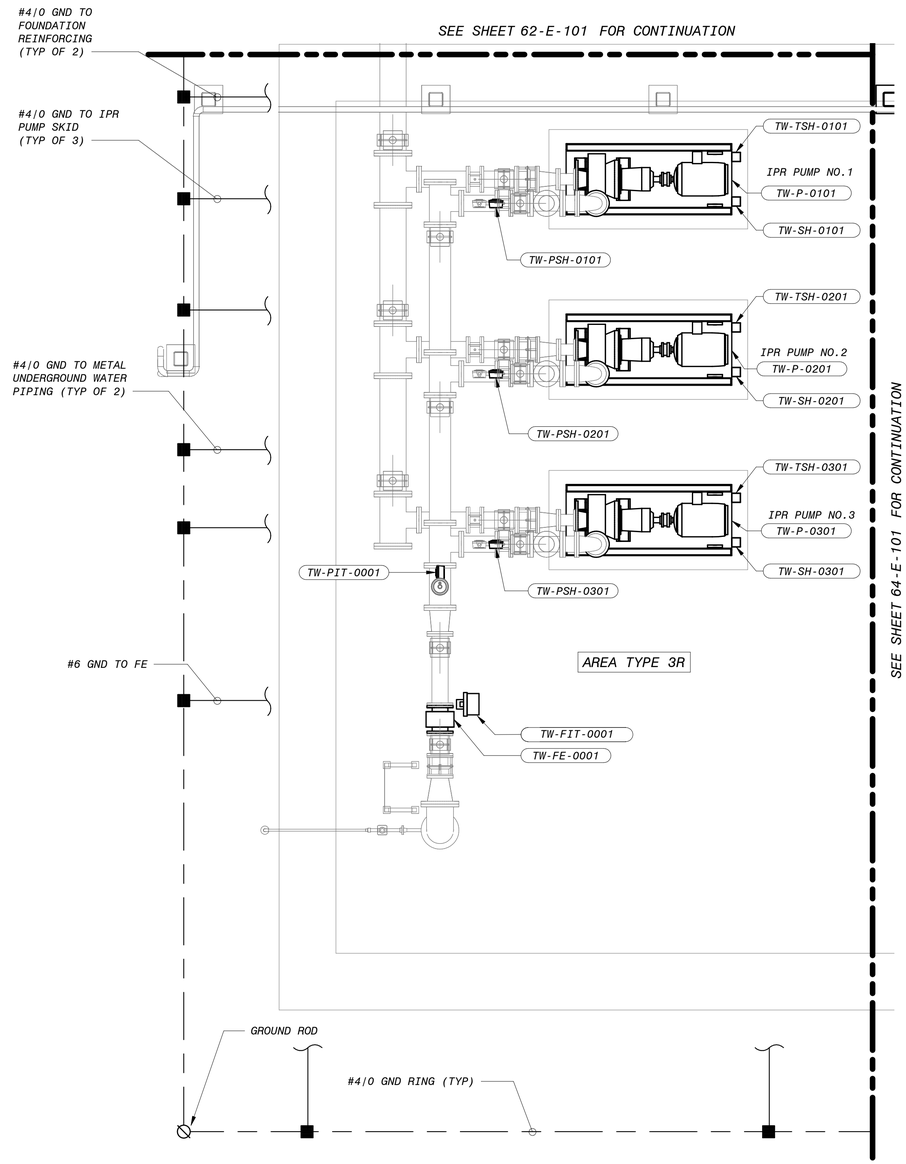

PRODUCT WATER AREA - IPR PRODUCT WATER PUMP STATION POWER AND GROUNDING PLAN

3/8" = 1'-0"

KEY PLAN

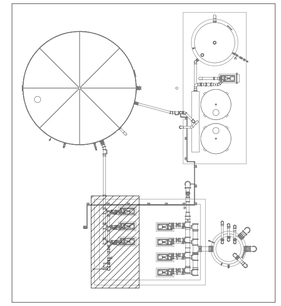

NOTES:

1. SEE DRAWING 00-E-001 AND 00-E-002 FOR ELECTRICAL LEGENDS, ABBREVIATIONS AND NOTES.
2. SEE DRAWING 10-E-100 FOR OVERALL ELECTRICAL SITE PLAN.
3. PROVIDE AT LEAST TWO #4/0 GROUND TO THE METAL TANK.
4. ALL THE TAGS ARE PRECEDED BY AREA CODE 63 UNLESS OTHERWISE NOTED.

12" 0' 1' 2' 3' 4' 5' 6' 7'

3/8" = 1'-0"

90% SUBMITTAL - NOT FOR CONSTRUCTION

NO.	BY	CHK	APP	DATE	REVISIONS AND RECORD OF USE
B	JSL	MAS	MJK	3/31/2020	90% SUBMITTAL
A	JSL	MJK	EVB	7/30/2019	60% SUBMITTAL

REGISTERED PROFESSIONAL ENGINEER
MARK J. KLEVETER
No. E 17748
ELECTRICAL
STATE OF CALIFORNIA

BLACK & VEATCH

JOINT VENTURE

BLACK & VEATCH

FILANC

CITY OF MORRO BAY
MORRO BAY WATER RECLAMATION FACILITY (WRF)

PRODUCT WATER AREA
IPR PRODUCT WATER PUMP STATION - ELECTRICAL
POWER AND GROUNDING PLAN

DESIGNED: JSL
DETAILED: SBC
CHECKED: MAS
APPROVED: MJK
DATE: 3/31/2020

0 1/2 1

IF THIS BAR DOES NOT MEASURE 1" THEN DRAWING IS NOT TO FULL SCALE

PROJECT NO.
400530

63-E-101
SHEET
OF

PLOTTED: 27-03-2020 20:47:33
D400530

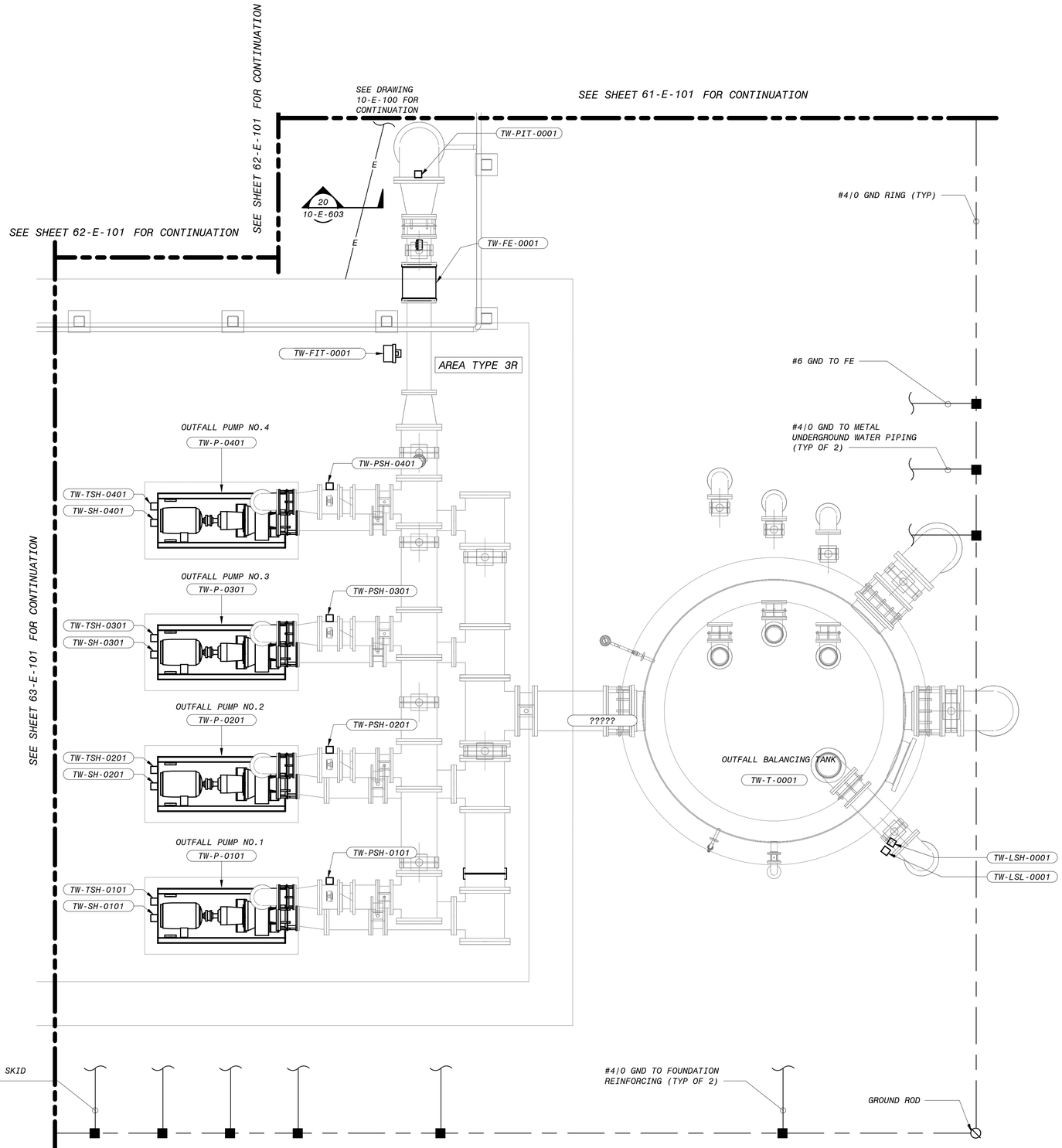

PRODUCT WATER AREA - OUTFALL PUMP STATION POWER AND GROUNDING PLAN

3/8" = 1'-0"

KEY PLAN

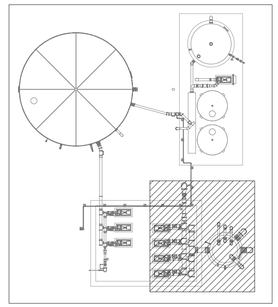

NOTES:

1. SEE DRAWING 00-E-001 AND 00-E-002 FOR ELECTRICAL LEGENDS, ABBREVIATIONS AND NOTES.
2. SEE DRAWING 10-E-100 FOR OVERALL ELECTRICAL SITE PLAN.
3. PROVIDE AT LEAST TWO #4/0 GROUND TO THE METAL TANK.
4. FOR CABLE DUCT BANK ENTRY REFER TO SITE OVERALL POWER PLAN (10-E-100).
5. ALL THE TAGS ARE PRECEDED BY AREA CODE 64 UNLESS OTHERWISE NOTED.
6. SEE DRAWING 10-E-603 FOR DUCT BANK SECTION.

NO.	BY	CHK	APP	DATE	REVISIONS AND RECORD OF USE
B	JSL	MAS	MJK	3/31/2020	90% SUBMITTAL
A	JSL	MJK	EVB	7/30/2019	60% SUBMITTAL

REGISTERED PROFESSIONAL ENGINEER
MARK J. KLEVEN
No. E 17748
ELECTRICAL
STATE OF CALIFORNIA

BLACK & VEATCH

JOINT VENTURE

FILANC

CITY OF MORRO BAY
MORRO BAY WATER
RECLAMATION FACILITY (WRF)

PRODUCT WATER AREA - OUTFALL PUMP STATION
ELECTRICAL
POWER AND GROUNDING PLAN

DESIGNED: JSL
DETAILED: SBC
CHECKED: MAS
APPROVED: MJK
DATE: 3/31/2020

0 1/2 1
IF THIS BAR DOES NOT MEASURE 1" THEN DRAWING IS NOT TO FULL SCALE

12" 0' 1' 2' 3' 4' 5' 6' 7'
3/8" = 1'-0"

PROJECT NO.
400530

64-E-101
SHEET
OF

90% SUBMITTAL- NOT FOR CONSTRUCTION

PLOTTED: 27-03-2020 20:47:35
D400530

#4/0 GND TO FOUNDATION REINFORCING

#4/0 GND TO METAL UNDERGROUND WATER PIPING (TYP OF 2)

#4/0 GROUND TO DUCT BANK (NOTE 5)

#4/0 GND TO AIR-BL-0101

GROUND ROD (TYP OF 2)

CONTINUATION TO DWG 80-E-101

SEE DRAWING 10-E-100 FOR CONTINUATION

26
10-E-603

E

E

71-AIR-LCP-0101

ROTARY LOBE SLUDGE HOLDING TANK BLOWER NO.1

AIR-BL-0101

WAS-LIT-0001

WAS-LE-0001

AIR-PIT-0102

AIR-SH-0001

ROTARY LOBE SLUDGE HOLDING TANK BLOWER NO.2

AIR-BL-0201

#6 GND TO 71-AIR-LCP-0101

#6 GND TO 71-AIR-LCP-0201

SAFE SETTLE TANK

AREA TYPE 7B

AIR-PIT-0202

#4/0 GND TO AIR-BL-0201

AIR-SH-0002

SLUDGE HOLDING TANK NO.1

SLUDGE HOLDING TANK NO.2

71-AIR-LCP-0201

NOTE 3

SEE SHEET 72-E-101 FOR CONTINUATION

WAS-HS-0101
WAS-LIT-0101
WAS-AIT-0101
WAS-JB-0101
WAS-AE-0101
WAS-MXR-0101
WAS-MSH-0101
WAS-TSH-0101

WAS-HS-0201
WAS-LIT-0201
WAS-AIT-0201
WAS-JB-0201
WAS-AE-0201
WAS-MXR-0201
WAS-MSH-0201
WAS-TSH-0201

#6 GND TO STAIRCASE

#6 GND TO MIXER (TYP OF 2)

CONTINUATION TO DWG 80-E-101

NOTES:

1. SEE DRAWING 00-E-001 AND 00-E-002 FOR ELECTRICAL LEGENDS, ABBREVIATIONS AND NOTES.
2. SEE DRAWING 10-E-100 FOR OVERALL ELECTRICAL SITE PLAN.
3. THE AREA SHOWN BY DASH BOUNDARY IS CLASSIFIED CLASS 1 DIVISION 2 AS PER NFPA 820, TABLE 6.2.2(a),11,C.
4. PROVIDE AT LEAST TWO #4/0 GROUND TO EACH OF THE METAL TANKS.
5. FOR CABLE DUCT BANK ENTRY REFER TO SITE OVERALL POWER PLAN (10-E-100).
6. ALL THE TAGS ARE PRECEDED BY AREA CODE 71 UNLESS OTHERWISE NOTED.
7. SEE DRAWING 10-E-603 FOR DUCT BANK SECTION.

RESIDUALS AREA - SLUDGE HOLDING TANKS & SAFE SETTLE TANK AREA POWER AND GROUNDING PLAN

1/4" = 1'-0"

4' 2' 0' 4' 8'

1/4" = 1'-0"

90% SUBMITTAL - NOT FOR CONSTRUCTION

NO.	BY	CHK	APP	DATE	REVISIONS AND RECORD OF USE
B	JSL	TJZ	MJK	3/31/2020	90% SUBMITTAL
A	JSL	MJK	EVB	7/30/2019	60% SUBMITTAL

REGISTERED PROFESSIONAL ENGINEER
MARK J. KLEVEN
No. E 17748
ELECTRICAL
STATE OF CALIFORNIA

BLACK & VEATCH
JOINT VENTURE
BLACK & VEATCH
FILANC

CITY OF MORRO BAY
MORRO BAY WRF
RECLAMATION FACILITY (WRF)

RESIDUALS AREA - SLUDGE HOLDING TANKS AND SAFE SETTLE TANK AREA
ELECTRICAL
POWER AND GROUNDING PLAN

DESIGNED: JSL
DETAILED: SBC
CHECKED: TJZ
APPROVED: MJK
DATE: 3/31/2020

0 1/2 1
IF THIS BAR DOES NOT MEASURE 1" THEN DRAWING IS NOT TO FULL SCALE

PROJECT NO.
400530

71-E-101
SHEET
OF

PLOTTED: 27-03-2020 18:04:53
D400530

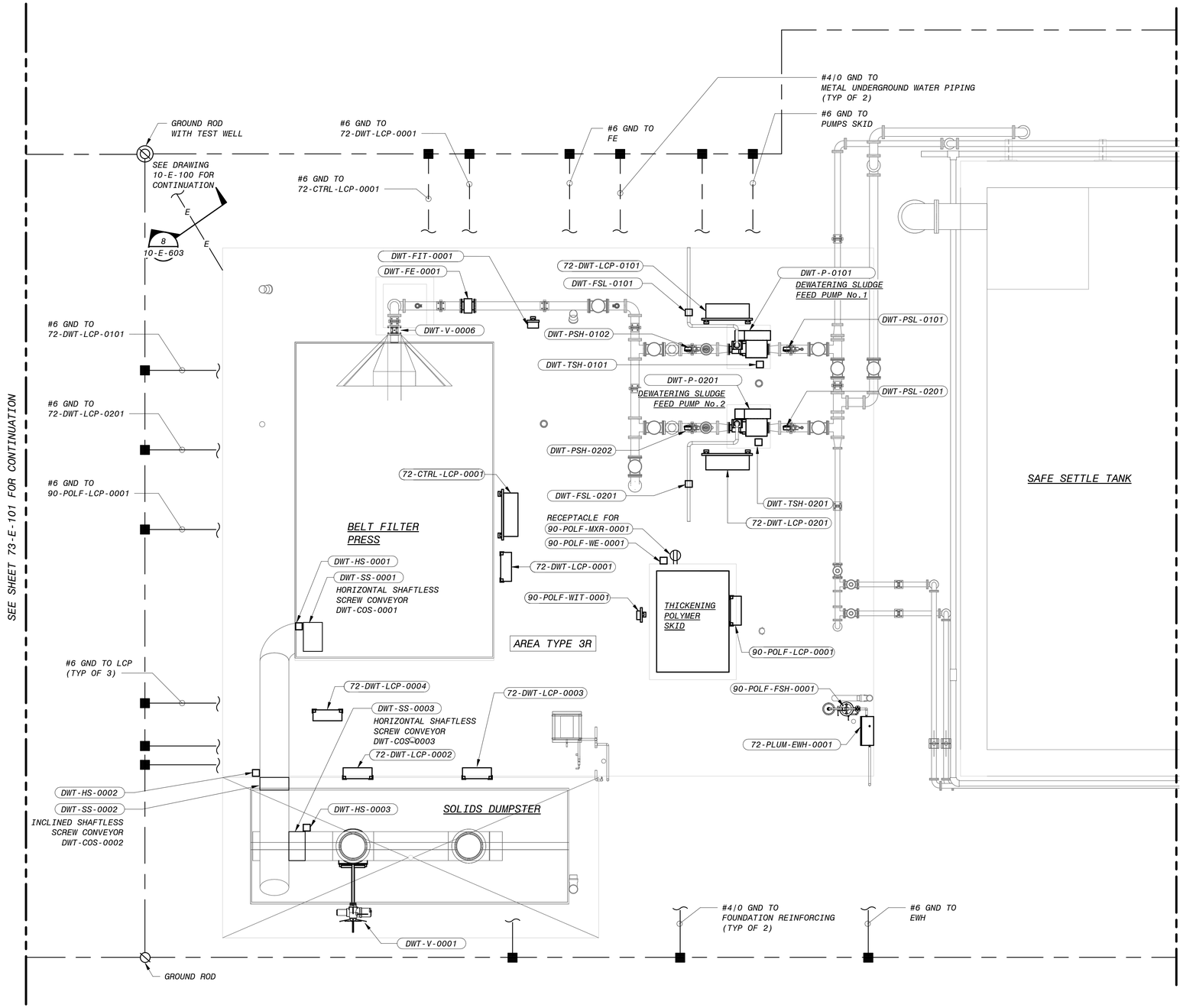

RESIDUALS AREA - DEWATERING FACILITY POWER AND GROUNDING PLAN

1/4" = 1'-0"

NOTES:

1. SEE DRAWING 00-E-001 AND 00-E-002 FOR ELECTRICAL LEGENDS, ABBREVIATIONS AND NOTES.
2. SEE DRAWING 10-E-100 FOR OVERALL ELECTRICAL SITE PLAN.
3. PROVIDE AT LEAST TWO #4/0 GROUND TO EACH OF THE METAL TANKS.
4. FOR CABLE DUCT BANK ENTRY REFER TO SITE OVERALL POWER PLAN (10-E-100).
5. ALL THE TAGS ARE PRECEDED BY AREA CODE 72 UNLESS OTHERWISE NOTED.
6. SEE DRAWING 10-E-603 FOR DUCT BANK SECTION.

NO.	BY	CHK	APP	DATE	REVISIONS AND RECORD OF USE
B	JSL	TJZ	MJK	3/31/2020	90% SUBMITTAL
A	JSL	MJK	EVB	7/30/2019	60% SUBMITTAL

REGISTERED PROFESSIONAL ENGINEER MARK J. KLEVEIN No. E 17748 ELECTRICAL STATE OF CALIFORNIA

BLACK & VEATCH

JOINT VENTURE

FILANC

BLACK & VEATCH

CITY OF MORRO BAY
MORRO BAY WRF
RECLAMATION FACILITY (WRF)

RESIDUALS AREA - DEWATERING FACILITY
ELECTRICAL
POWER AND GROUNDING PLAN

DESIGNED:	JSL
DETAILED:	SBC
CHECKED:	TJZ
APPROVED:	MJK
DATE:	3/31/2020

0 1/2 1

IF THIS BAR DOES NOT MEASURE 1" THEN DRAWING IS NOT TO FULL SCALE

PROJECT NO. 400530

72-E-101

SHEET OF

4' 2' 0' 4' 8'

1/4" = 1'-0"

90% SUBMITTAL- NOT FOR CONSTRUCTION

PLOTTED: 27-03-2020 21:30:17

D400530

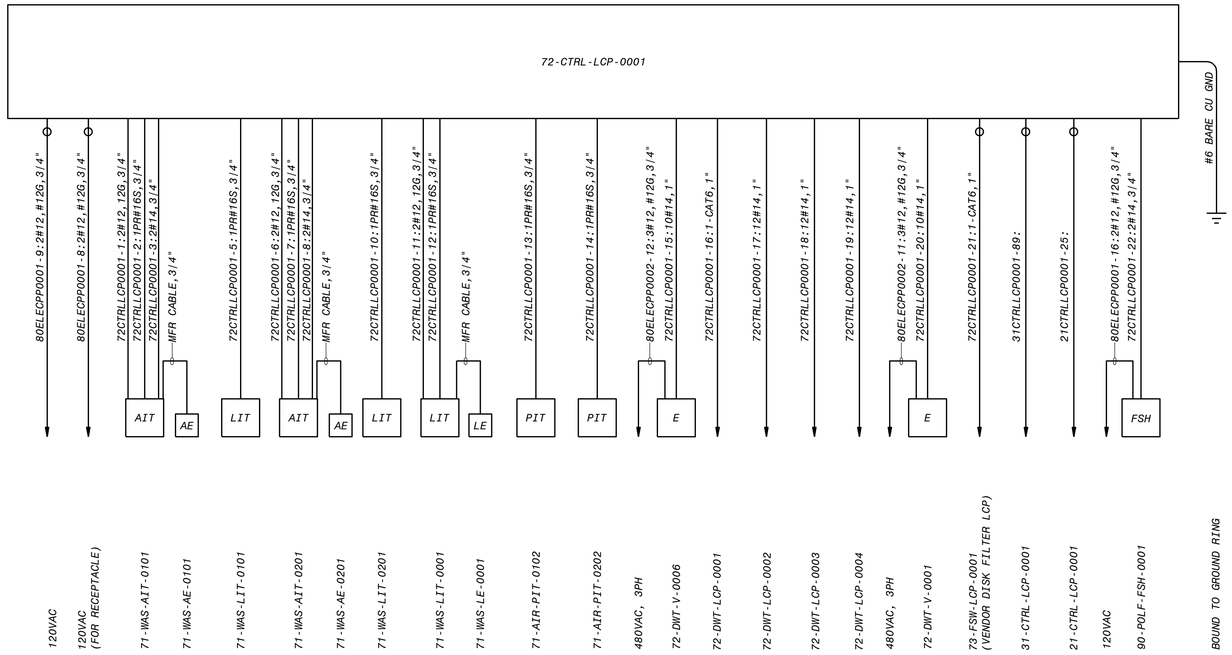

72-CTRL-LCP-0001 ONE-LINE DIAGRAM

RESIDUALS AREA

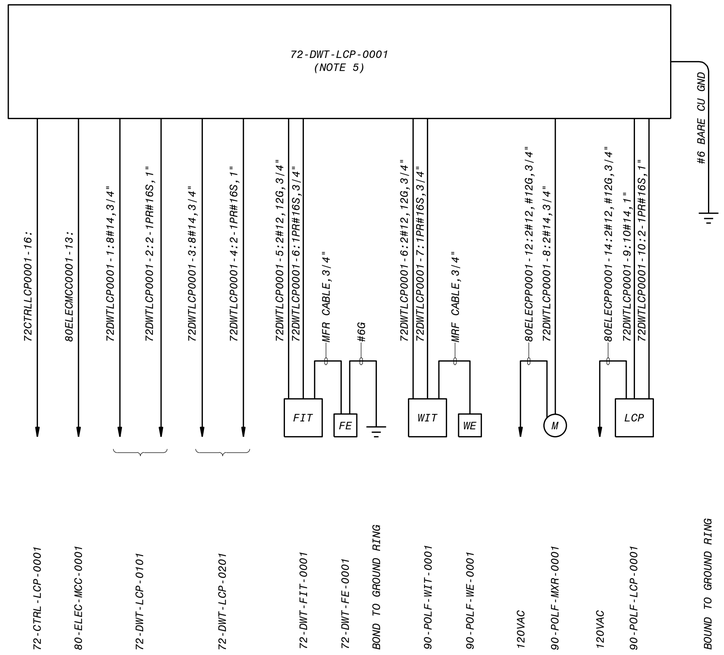

72-DWT-LCP-0001 ONE-LINE DIAGRAM

RESIDUALS AREA

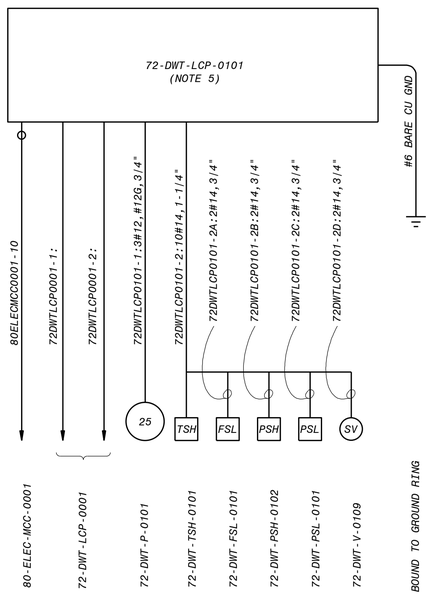

72-DWT-LCP-0101 ONE-LINE DIAGRAM

RESIDUALS AREA

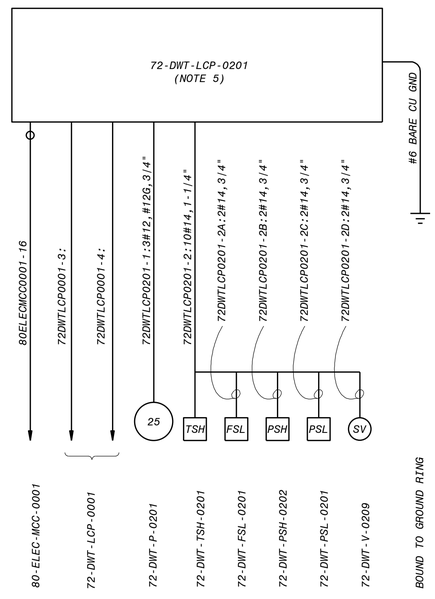

72-DWT-LCP-0201 ONE-LINE DIAGRAM

RESIDUALS AREA

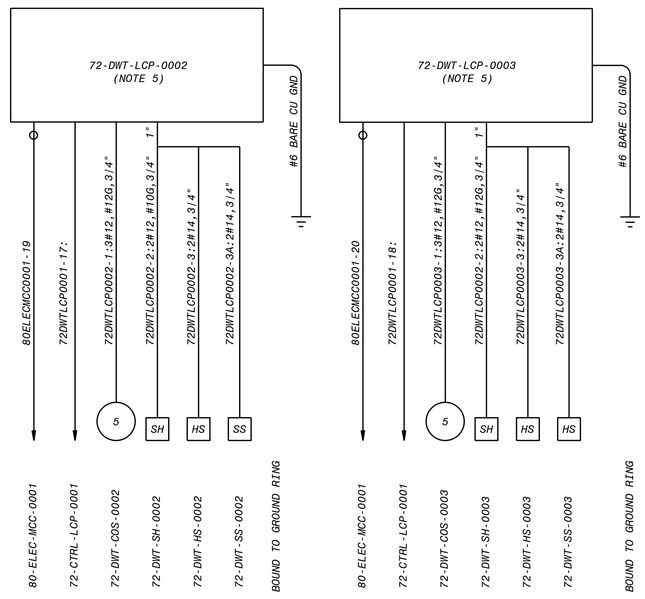

72-DWT-LCP-0002 ONE-LINE DIAGRAM

RESIDUALS AREA

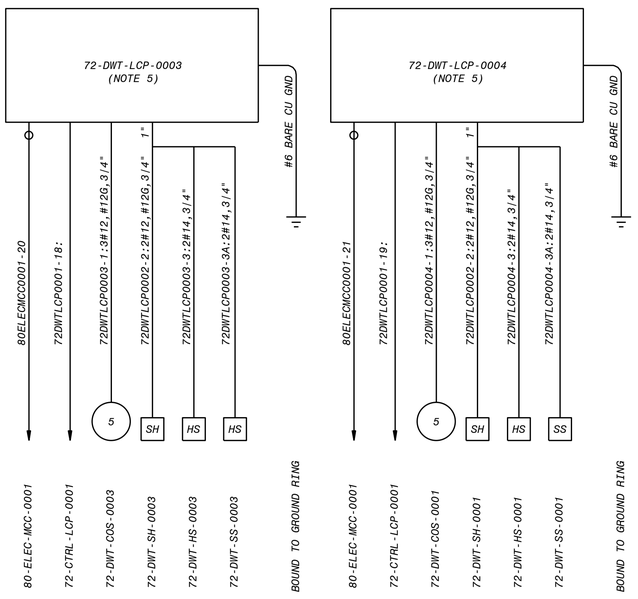

72-DWT-LCP-0003 ONE-LINE DIAGRAM

RESIDUALS AREA

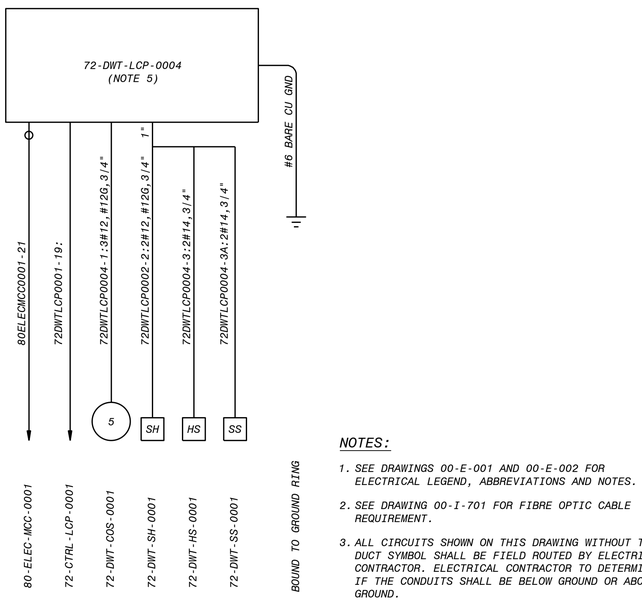

72-DWT-LCP-0004 ONE-LINE DIAGRAM

RESIDUALS AREA

NOTES:

1. SEE DRAWINGS 00-E-001 AND 00-E-002 FOR ELECTRICAL LEGEND, ABBREVIATIONS AND NOTES.
2. SEE DRAWING 00-I-701 FOR FIBRE OPTIC CABLE REQUIREMENT.
3. ALL CIRCUITS SHOWN ON THIS DRAWING WITHOUT THE DUCT SYMBOL SHALL BE FIELD ROUTED BY ELECTRICAL CONTRACTOR. ELECTRICAL CONTRACTOR TO DETERMINE IF THE CONDUITS SHALL BE BELOW GROUND OR ABOVE GROUND.
4. 24V DC POWER CIRCUIT, 24V DC DIGITAL CIRCUITS AND 24V DC ANALOG CIRCUITS MAY BE COMBINED INTO THE SAME CONDUIT AS LONG AS THE CONDUIT FILL MEETS THE NEC REQUIREMENTS.
5. SEE VENDOR DRAWINGS FOR ADDITIONAL FIELD WIRING.

90% SUBMITTAL - NOT FOR CONSTRUCTION

NO.	BY	CHK	APP	DATE	REVISIONS AND RECORD OF USE
B	JSL	TJZ	MJK	3/31/2020	90% SUBMITTAL
A	JSL	MJK	EVB	7/30/2019	60% SUBMITTAL

No. E 17748

BLACK & VEATCH

JOINT VENTURE

FILANC

CITY OF MORRO BAY
MORRO BAY WRF
RECLAMATION FACILITY (WRF)

RESIDUALS AREA
ELECTRICAL
72-CTRL-LCP-0001 ONE-LINE DIAGRAM

DESIGNED: JSL
DETAILED: SBC
CHECKED: TJZ
APPROVED: MJK
DATE: 3/31/2020

0 1/2 1
IF THIS BAR DOES NOT MEASURE 1" THEN DRAWING IS NOT TO FULL SCALE

PROJECT NO.
400530

72-E-701
SHEET
OF

FB9000A
D400530
PLOTTED: 3/31/2020 9:35 AM FILE: C:\pw_working\bvw_americas\d0683637\400530-72-E-701.dwg

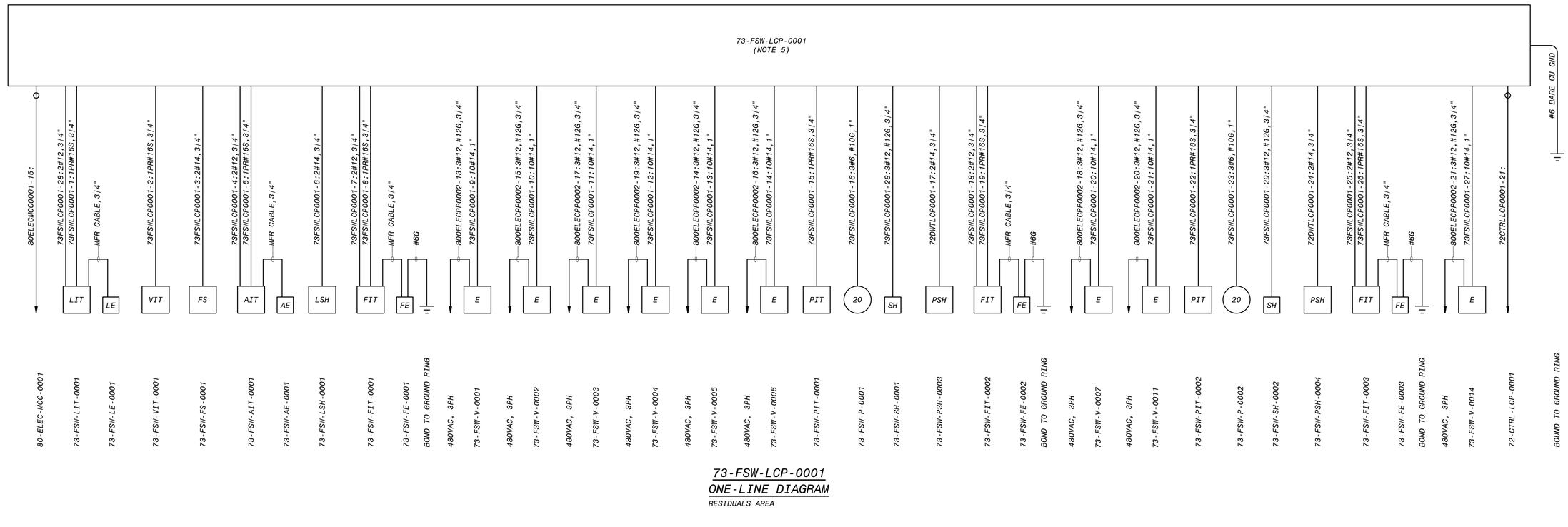

73-FSW-LCP-0001
ONE-LINE DIAGRAM
RESIDUALS AREA

NOTES:

1. SEE DRAWINGS 00-E-001 AND 00-E-002 FOR ELECTRICAL LEGEND, ABBREVIATIONS AND NOTES.
2. SEE DRAWING 00-I-701 FOR FIBRE OPTIC CABLE REQUIREMENT.
3. ALL CIRCUITS SHOWN ON THIS DRAWING WITHOUT THE DUCT SYMBOL SHALL BE FIELD ROUTED BY ELECTRICAL CONTRACTOR. ELECTRICAL CONTRACTOR TO DETERMINE IF THE CONDUITS SHALL BE BELOW GROUND OR ABOVE GROUND.
4. 24V DC POWER CIRCUIT, 24V DC DIGITAL CIRCUITS AND 24V DC ANALOG CIRCUITS MAY BE COMBINED INTO THE SAME CONDUIT AS LONG AS THE CONDUIT FILL MEETS THE NEC REQUIREMENTS.
5. SEE VENDOR DRAWINGS FOR ADDITIONAL FIELD WIRING.

90% SUBMITTAL - NOT FOR CONSTRUCTION

NO.	BY	CHK	APP	DATE	REVISIONS AND RECORD OF USE
A	JSL	TJZ	MJK	3/31/2020	90% SUBMITTAL

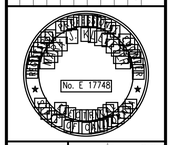

BLACK & VEATCH
JOINT VENTURE
FILANC
BLACK & VEATCH

CITY OF MORRO BAY
MORRO BAY WRF
RECLAMATION FACILITY (WRF)

RESIDUALS AREA
ELECTRICAL
73-FSW-LCP-0001 ONE-LINE DIAGRAM

DESIGNED: JSL
DETAILED: SBC
CHECKED: TJZ
APPROVED: MJK
DATE: 3/31/2020

0 1/2 1
IF THIS BAR DOES NOT MEASURE 1" THEN DRAWING IS NOT TO FULL SCALE

PROJECT NO.
400530

72-E-702
SHEET
OF

FB0000A
D400530
PLOTTED: 3/27/2020 7:50 AM FILE: C:\PWBatchPDF\Process\400530 - Morro Bay WRF\400530-72-E-702.dwg

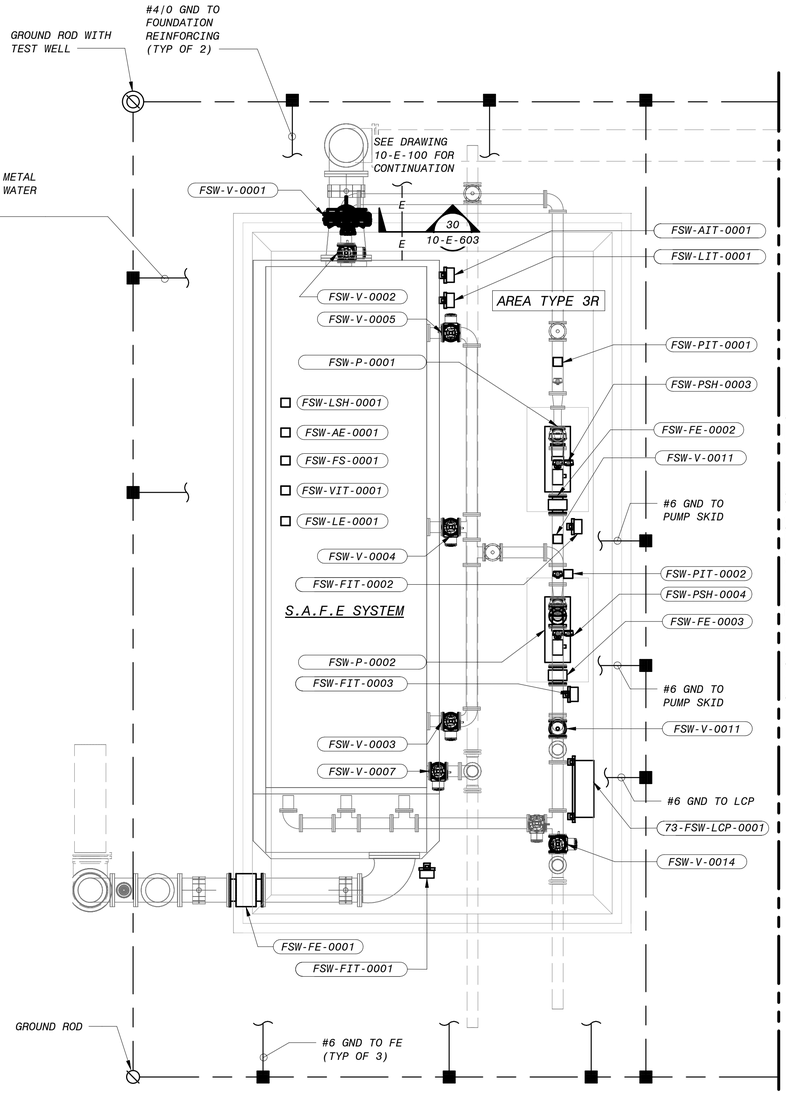

RESIDUALS AREA - SAFE FILTER POWER AND GROUNDING PLAN

1/4" = 1'-0"

NOTES:

1. SEE DRAWING 00-E-001 AND 00-E-002 FOR ELECTRICAL LEGENDS, ABBREVIATIONS AND NOTES.
2. SEE DRAWING 10-E-100 FOR OVERALL ELECTRICAL SITE PLAN.
3. PROVIDE AT LEAST TWO #4/0 GROUND TO EACH OF THE METAL TANKS.
4. FOR CABLE DUCT BANK ENTRY REFER TO SITE OVERALL POWER PLAN (10-E-100).
5. ALL THE TAGS ARE PRECEDED BY AREA CODE 73 UNLESS OTHERWISE NOTED.
6. SEE DRAWING 10-E-603 FOR DUCT BANK SECTION.

NO.	BY	CHK	APP	DATE	REVISIONS AND RECORD OF USE
B	JSL	TJZ	MJK	3/31/2020	90% SUBMITTAL
A	JSL	MJK	EVB	7/30/2019	60% SUBMITTAL

REGISTERED PROFESSIONAL ENGINEER MARK J. KLEVEIN No. E 17748 ELECTRICAL STATE OF CALIFORNIA

BLACK & VEATCH JOINT VENTURE FILANC BLACK & VEATCH

CITY OF MORRO BAY
MORRO BAY WRF
RECLAMATION FACILITY (WRF)

RESIDUALS AREA - SAFE FILTER SYSTEM
ELECTRICAL
POWER AND GROUNDING PLAN

DESIGNED:	JSL
DETAILED:	SBC
CHECKED:	TJZ
APPROVED:	MJK
DATE:	3/31/2020

0 1/2 1

IF THIS BAR DOES NOT MEASURE 1" THEN DRAWING IS NOT TO FULL SCALE

PROJECT NO. 400530

73-E-101
SHEET
OF

4' 2' 0' 4' 8'

1/4" = 1'-0"

90% SUBMITTAL- NOT FOR CONSTRUCTION

PLOTTED: 27-03-2020 18:04:57
D400530

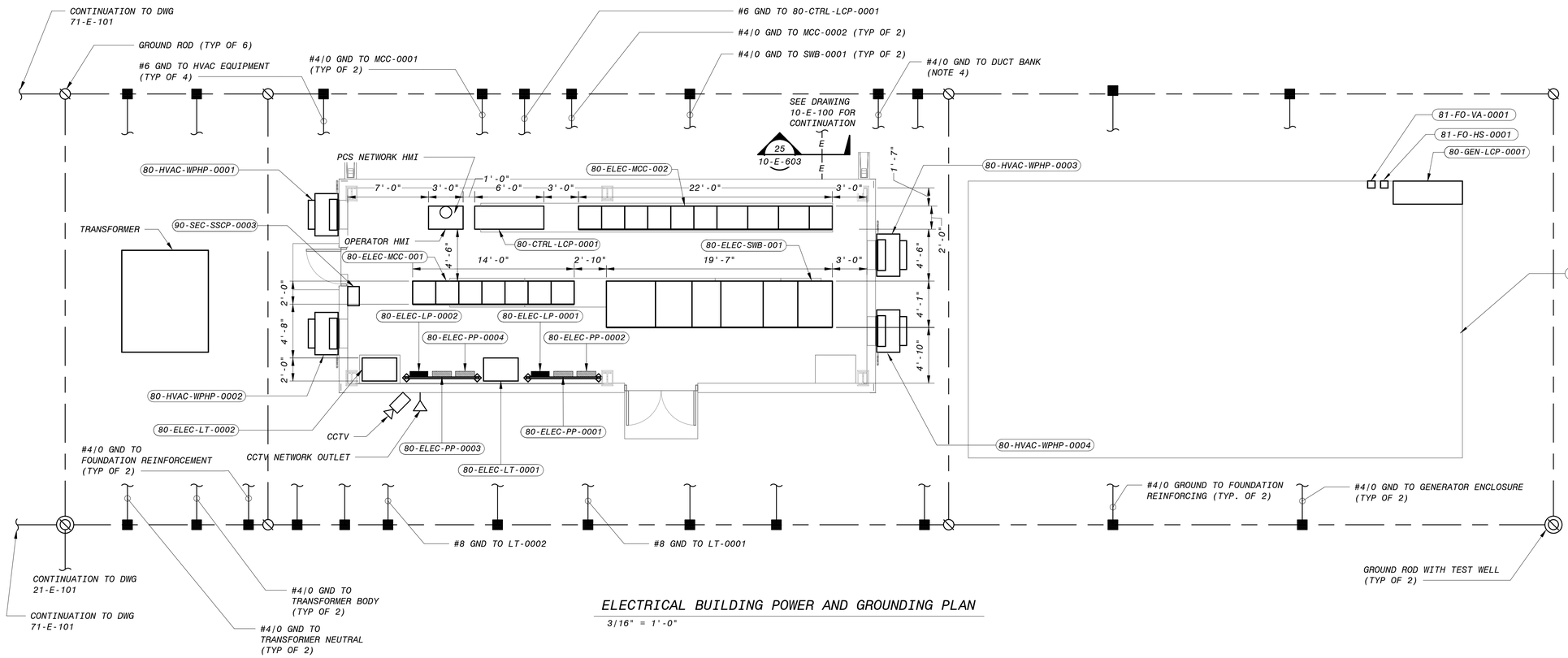

ELECTRICAL BUILDING POWER AND GROUNDING PLAN

3/16" = 1'-0"

NOTES:

1. SEE DRAWING 00-E-001 AND 00-E-002 FOR ELECTRICAL LEGENDS, ABBREVIATIONS AND NOTES.
2. SEE DRAWING 10-E-100 FOR OVERALL ELECTRICAL SITE PLAN.
3. GROUNDING OF UTILITY EQUIPMENT SHALL BE IN LINE WITH UTILITY REQUIREMENTS.
4. FOR CABLE DUCT BANK ENTRY REFER TO SITE OVERALL POWER PLAN (10-E-100).
5. SEE DRAWING 10-E-603 FOR DUCT BANK SECTION.

6" 4' 2' 0' 5' 10'

3/16" = 1'-0"

90% SUBMITTAL - NOT FOR CONSTRUCTION

NO.	BY	CHK	APP	DATE	REVISIONS AND RECORD OF USE
B	JSL	TJZ	MJK	3/31/2020	90% SUBMITTAL
A	JSL	MJK	EVB	7/30/2019	60% SUBMITTAL

REGISTERED PROFESSIONAL ENGINEER
MARK J. KLEVEN
No. E 17748
ELECTRICAL
STATE OF CALIFORNIA

BLACK & VEATCH
JOINT VENTURE
BLACK & VEATCH
FILANC

CITY OF MORRO BAY
MORRO BAY WRF
RECLAMATION FACILITY (WRF)

ELECTRICAL BUILDING
ELECRICAL
POWER AND GROUNDING PLAN

DESIGNED: JSL
DETAILED: SBC
CHECKED: TJZ
APPROVED: MJK
DATE: 3/31/2020

0 1/2 1
IF THIS BAR DOES NOT MEASURE 1" THEN DRAWING IS NOT TO FULL SCALE

PROJECT NO.
400530

80-E-101
SHEET
OF

PLOTTED: 27-03-2020 18:13:39
D400530

			PANELBOARD: 80-ELEC-PP-0001		BUS: COPPER				MAINS: 3P-100A MAIN BREAKER				
PHASE			SERVICE: 120/208V, 3PH, 4W		RATING: 100A				LOCATION: ELECTRICAL BUILDING		PHASE		
"A"	"B"	"C"	MOUNTING: SURFACE								"A"	"B"	"C"
V.A.	V.A.	V.A.	LOAD	P	BKR	CKT #		BKR	P	LOAD	V.A.	V.A.	V.A.
5000			GENERATOR CONTROL PANEL (80-GEN-LCP-0001)	1	60	1	2	20	1	OPERATOR HMI SCREEN	500		
	2000		80-CTRL-LCP-0001	1	30	3	4	20	1	21-CTRL-LCP-0001 (RECEPTACLE)		500	
		500	80-CTRL-LCP-0001 (RECEPTACLE)	1	20	5	6	30	1	21-CTRL-LCP-0001			2000
500			22-SCR-SAMP-0001	1	20	7	8	20	1	72-CTRL-LCP-0001 (RECEPTACLE)	500		
	2000		72-CTRL-LCP-0001	1	30	9	10	20	1	SPARE		0	
		0	SPARE	1	20	11	12	20	1	90-POLF-MXR-0001			500
0			SPARE	1	20	13	14	20	1	90-POLF-LCP-0001	250		
	0		SPARE	1	20	15	16	20	1	90-POLF-FSH-0006		100	
		0	SPARE	1	20	17	18	20	1	SPARE			0
0			SPARE	1	20	19	20	20	1	SPARE	0		
	0		SPARE	1	20	21	22	20	1	SPARE		0	
		0	SPARE	1	20	23	24	20	1	SPARE			0
0			SPARE	1	20	25	26	20	1	SPARE	0		
	0		SPARE	1	20	27	28	20	1	SPARE		0	
		0	SPARE	1	20	29	30	20	1	SPARE			0
0			SPARE	1	20	31	32	20	1	SPARE	0		
	0		SPARE	1	20	33	34	20	1	SPARE		0	
		0	SPARE	1	20	35	36	20	1	SPARE			0
0			SPARE	1	20	37	38	20	1	SPARE	0		
	0		SPARE	1	20	39	40	20	1	SPARE		0	
		0	SPARE	1	20	41	42	20	1	SPARE			0
5500			TOTAL "A"			6750				TOTAL "A"	1250		
	4000		TOTAL "B"			4600				TOTAL "B"		600	
		500	TOTAL "C"			3000				TOTAL "C"			2500
			TOTAL			14350							

80-ELEC-PP-0001
POWER PANELS SCHEDULE
ELECTRICAL BUILDING

			PANELBOARD: 80-ELEC-PP-0002		BUS: COPPER				MAINS: 3P-100A MAIN BREAKER				
PHASE			SERVICE: 480V 3PH, 3W		RATING: 100A				LOCATION: ELECTRICAL BUILDING		PHASE		
"A"	"B"	"C"	MOUNTING: SURFACE								"A"	"B"	"C"
V.A.	V.A.	V.A.	LOAD	P	BKR	CKT #		BKR	P	LOAD	V.A.	V.A.	V.A.
345	345	345	22-SCR-V-1104	3	20	1	2	20	3	80-HVAC-WPHP-0001	3880	3880	3880
345	345	345	22-SCR-V-2003	3	20	3	4	20	3	80-HVAC-WPHP-0002	3880	3880	3880
345	345	345	21-GRT-V-1001	3	20	5	6	20	3	21-GRT-V-2001	345	345	345
345	345	345	21-SCR-V-1001	3	20	7	8	20	3	21-SCR-V-2001	345	345	345
345	345	345	22-SCR-V-1001	3	20	9	10	20	3	22-SCR-V-2001	345	345	345
345	345	345	72-DWT-V-0001	3	20	11	12	20	3	72-DWT-V-0006	345	345	345
345	345	345	73-FSW-V-0001	3	20	13	14	20	3	73-FSW-V-0005	345	345	345
345	345	345	73-FSW-V-0002	3	20	15	16	20	3	73-FSW-V-0006	345	345	345
345	345	345	73-FSW-V-0003	3	20	17	18	20	3	73-FSW-V-0007	345	345	345
345	345	345	73-FSW-V-0004	3	20	19	20	20	3	73-FSW-V-0011	345	345	345
345	345	345	73-FSW-V-0014	3	20	21	22	20	3	SPARE	0	0	0
0	0	0	SPARE	3	20	23	24	30	3	SPARE	0	0	0
0	0	0	SPARE	3	30	25	26	30	3	SPARE	0	0	0
0	0	0	SPARE	3	30	27	28	20	3	SPARE	0	0	0
3796			TOTAL "A"			14317				TOTAL "A"	10520		
	3796		TOTAL "B"			14317				TOTAL "B"		10520	
		3796	TOTAL "C"			14317				TOTAL "C"			10520
			TOTAL			42950							

80-ELEC-PP-0002
POWER PANELS SCHEDULE
ELECTRICAL BUILDING

			PANELBOARD: 80-ELEC-PP-0003		BUS: COPPER				MAINS: 3P-100A MAIN BREAKER				
PHASE			SERVICE: 120/208V, 3PH, 4W		RATING: 100A				LOCATION: ELECTRICAL BUILDING		PHASE		
"A"	"B"	"C"	MOUNTING: SURFACE								"A"	"B"	"C"
V.A.	V.A.	V.A.	LOAD	P	BKR	CKT #		BKR	P	LOAD	V.A.	V.A.	V.A.
2000			31-CTRL-LCP-0001	1	30	1	2	20	1	32-CA-V-1001,32-NOCL-V-1001	2072		
	100		31-BNR-AIT-1003	1	20	3	4	20	1	32-CA-V-2001,32-NOCL-V-2001		2072	
		500	31-CTRL-LCP-0001 (RECEPTACLE)	1	20	5	6	20	1	SPARE			0
0			SPARE	1	20	7	8	20	1	SPARE	0		
	0		SPARE	1	20	9	10	20	1	SPARE		0	
		100	31-BNR-AIT-2003	1	20	11	12	20	1	SPARE			0
0			SPARE	1	20	13	14	20	1	SPARE	0		
	0		SPARE	1	20	15	16	20	1	SPARE		0	
		0	SPARE	1	20	17	18	20	1	SPARE			0
2000			32-MBR-LCP-0001	1	30	19	20	20	1	SPARE	0		
	500		32-MBR-LCP-0001 (RECEPTACLE)	1	20	21	22	20	1	SPARE		0	
		0	SPARE	1	20	23	24	20	1	SPARE			0
0			SPARE	1	20	25	26	20	1	SPARE	0		
	0		SPARE	1	20	27	28	20	1	SPARE		0	
		0	SPARE	1	20	29	30	20	1	SPARE			0
0			SPARE	1	20	31	32	20	1	SPARE	0		
	0		SPARE	1	20	33	34	20	1	SPARE		0	
		0	SPARE	1	20	35	36	20	1	SPARE			0
0			SPARE	1	20	37	38	20	1	SPARE	0		
	0		SPARE	1	20	39	40	20	1	SPARE		0	
		0	SPARE	1	20	41	42	20	1	SPARE			0
4000			TOTAL "A"			6072				TOTAL "A"	2072		
	600		TOTAL "B"			2672				TOTAL "B"		2072	
		600	TOTAL "C"			600				TOTAL "C"			0
			TOTAL			9344							

80-ELEC-PP-0003
POWER PANELS SCHEDULE
ELECTRICAL BUILDING

			PANELBOARD: 80-ELEC-PP-0004		BUS: COPPER				MAINS: 3P-100A MAIN BREAKER				
PHASE			SERVICE: 480V 3PH, 3W		RATING: 100A				LOCATION: ELECTRICAL BUILDING		PHASE		
"A"	"B"	"C"	MOUNTING: SURFACE								"A"	"B"	"C"
V.A.	V.A.	V.A.	LOAD	P	BKR	CKT #		BKR	P	LOAD	V.A.	V.A.	V.A.
345	345	345	31-AER-V-1201	3	20	1	2	20	3	80-HVAC-WPHP-0003	3880	3880	3880
345	345	345	31-AER-V-2101	3	20	3	4	20	3	80-HVAC-WPHP-0004	3880	3880	3880
345	345	345	31-AER-V-2201	3	20	5	6	20	3	SPARE	0	0	0
0	0	0	SPARE	3	20	7	8	20	3	SPARE	0	0	0
345	345	345	31-AER-V-1101	3	20	9	10	20	3	SPARE	0	0	0
345	345	345	31-WAS-V-1001	3	20	11	12	20	3	SPARE	0	0	0
345	345	345	31-BNR-V-2001	3	20	13	14	20	3	32-RAS-V-2001	345	345	345
345	345	345	31-WAS-V-2001	3	20	15	16	20	3	SPARE	0	0	0
0	0	0	SPARE	3	20	17	18	20	3	32-RAS-V-1001	345	345	345
0	0	0	SPARE	3	20	19	20	20	3	SPARE	0	0	0
345	345	345	31-BNR-V-1001	3	20	21	22	20	3	SPARE	0	0	0
0	0	0	SPARE	3	20	23	24	30	3	SPARE	0	0	0
0	0	0	SPARE	3	30	25	26	30	3	SPARE	0	0	0
0	0	0	SPARE	3	30	27	28	20	3	SPARE	0	0	0
2763			TOTAL "A"			11214				TOTAL "A"	8451		
	2763		TOTAL "B"			11214				TOTAL "B"		8451	
		2763	TOTAL "C"			11214				TOTAL "C"			8451
			TOTAL			33641							

80-ELEC-PP-0004
POWER PANELS SCHEDULE
ELECTRICAL BUILDING

NOTES:

1. SEE DRAWINGS 00-E-001 AND 00-E-002 FOR ELECTRICAL LEGEND, ABBREVIATIONS AND NOTES.
2. PROVIDE MINIMUM #12, #12G CABLE AND 3/4" CONDUIT FOR 20A CIRCUIT; MINIMUM #8, #10G CABLE AND 3/4" CONDUIT FOR 30A CIRCUIT; MINIMUM #2, #10G CABLE AND 1-1/4" CONDUIT FOR 60A CIRCUIT.

90% SUBMITTAL - NOT FOR CONSTRUCTION

NO.	BY	CHK	APP
B	JSL	TJZ	MJK
A	JSL	MJK	EVB

REVISIONS AND RECORD OF USE

DATE	
3/31/2020	90% SUBMITTAL
7/30/2019	60% SUBMITTAL

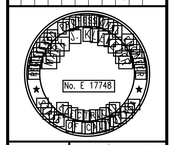

BLACK & VEATCH
JOINT VENTURE
BLACK & VEATCH
FILANC

CITY OF MORRO BAY
MORRO BAY WRF
RECLAMATION FACILITY (WRF)

ELECTRICAL BUILDING
ELECTRICAL
POWER PANELS SCHEDULE

DESIGNED: JSL
DETAILED: SBC
CHECKED: TJZ
APPROVED: MJK
DATE: 3/31/2020

0 1/2 1
IF THIS BAR DOES NOT MEASURE 1" THEN DRAWING IS NOT TO FULL SCALE

PROJECT NO.
400530

80-E-601
SHEET
OF

FB9000A
D400530
PLOTTED: 3/31/2020 10:02 AM FILE: C:\pw_working\bvw_americas\d0683637\400530-80-E-601.dwg

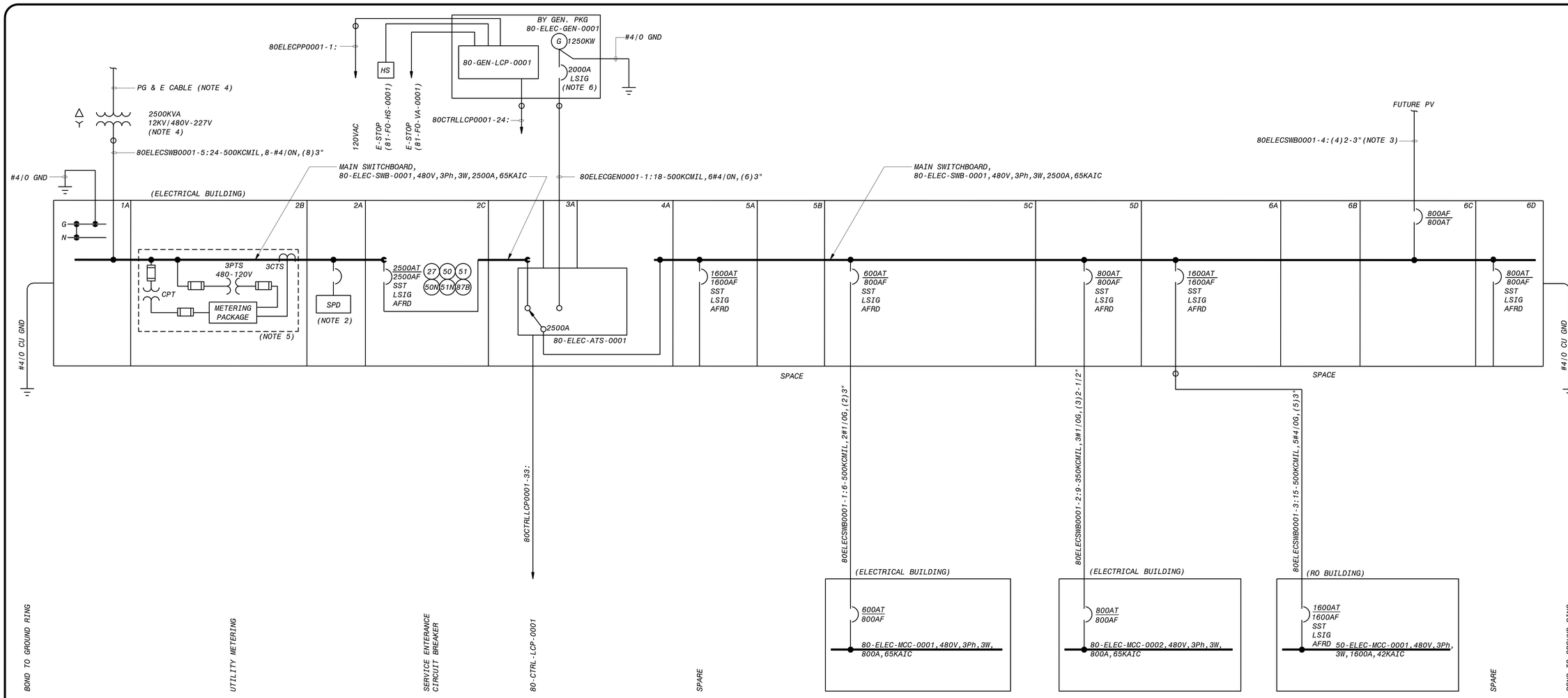

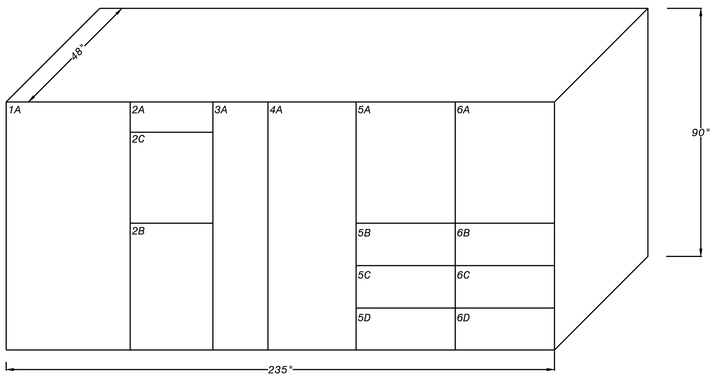

80-ELEC-SWB-0001
FRONT ELEVATION
ELECTRICAL BUILDING

80-ELEC-SWB-0001
ONE-LINE DIAGRAM
ELECTRICAL BUILDING

NOTES:

1. SEE DRAWINGS 00-E-001 AND 00-E-002 FOR ELECTRICAL LEGEND, ABBREVIATIONS AND NOTES.
2. CIRCUIT BREAKER SIZE SHALL BE RECOMMENDED BY SWITCHBOARD SUPPLIER.
3. PROVIDE EMPTY CONDUIT WITH PULL STRINGS UP TO THE NEAREST MANHOLE TO FACILITATE CONNECTON OF POWER AND CONTROL CIRCUITS IN THE FUTURE.
4. THE UTILITY TRANSFORMER AND PG&E PRIMARY CABLES ARE FURNISHED AND INSTALLED BY PG&E.
5. PG&E METER AND CTs ARE FURNISHED BY PG&E AND INSTALLED BY ELECTRICAL INSTALLER.
6. NECESSARY GENERATOR PROTECTION RELAYS SHALL BE PROVIDED BY GENERATOR SUBCONTRACTOR.

90% SUBMITTAL - NOT FOR CONSTRUCTION

NO.	BY	CHK	APP	DATE	REVISIONS AND RECORD OF USE
C	JSL	TJZ	MJK	3/31/2020	90% SUBMITTAL
B	JSL	MJK	EVB	7/30/2019	60% SUBMITTAL
A	JSL	MJK	EVB	3/5/2019	30% SUBMITTAL

No. E 17748

BLACK & VEATCH
JOINT VENTURE
BLACK & VEATCH
FILANC

CITY OF MORRO BAY
MORRO BAY WRF
RECLAMATION FACILITY (WRF)

ELECTRICAL BUILDING
ELECTRICAL
80-ELEC-SWB-0001 ONE-LINE DIAGRAM

DESIGNED:	JSL
DETAILED:	SBC
CHECKED:	TJZ
APPROVED:	MJK
DATE:	3/31/2020

0 1/2 1
IF THIS BAR DOES NOT MEASURE 1" THEN DRAWING IS NOT TO FULL SCALE

PROJECT NO.
400530

80-E-701
SHEET
OF

FD9000A
D400330
PLOTTED: 3/27/2020 7:51 AM FILE: C:\PWBatchPDF\Process\400530 - Morro Bay WRF\400530-80-E-701.dwg

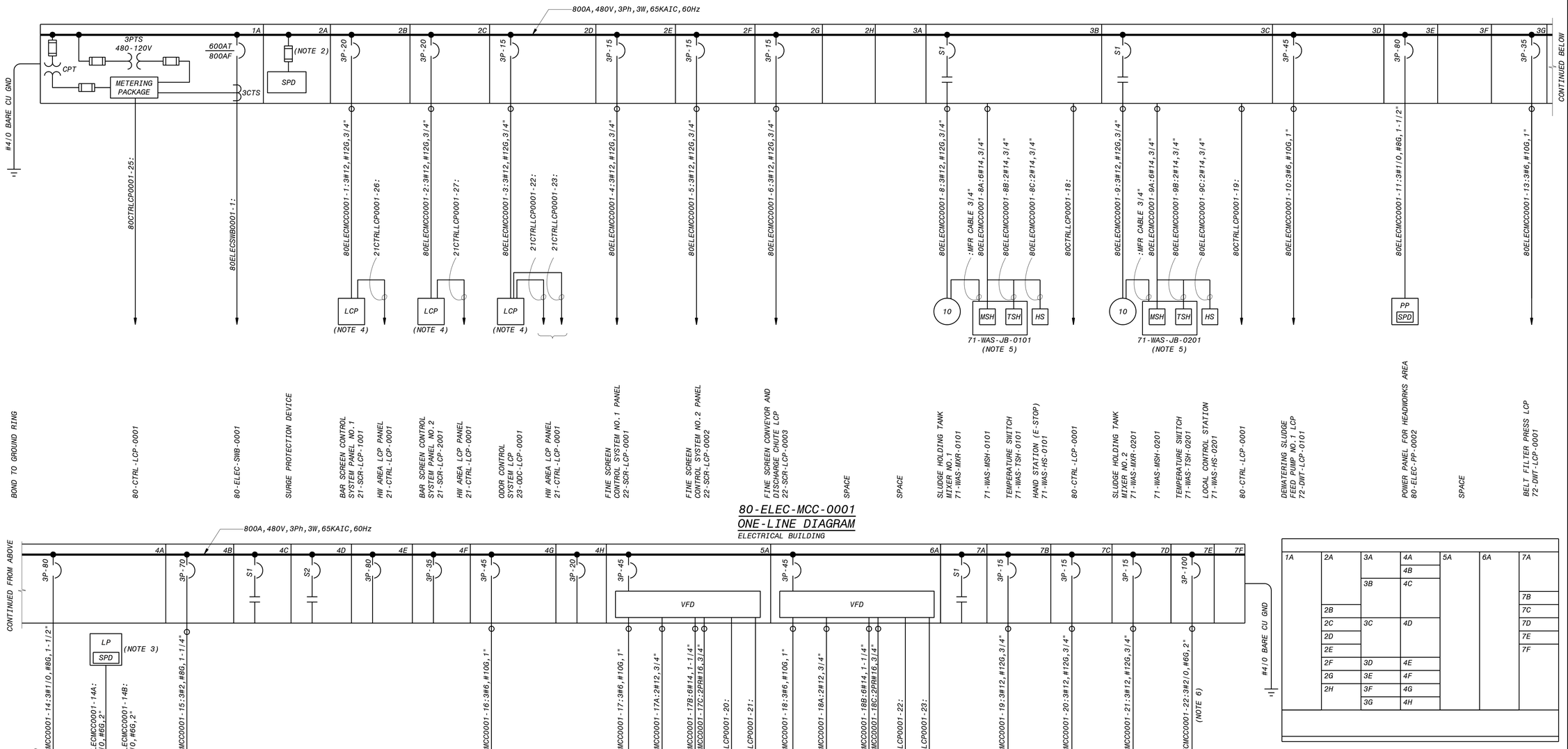

NOTES:

1. SEE DRAWINGS 00-E-001 AND 00-E-002 FOR ELECTRICAL LEGEND, ABBREVIATIONS AND NOTES.
2. FUSED SWITCH SIZE SHALL BE RECOMMENDED BY MCC SUPPLIER.
3. THE LIGHTING PANEL SHALL BE DESIGNED AND FURNISHED BY ELECTRICAL CONTRACTOR PER THEIR LIGHTING DESIGN.
4. SEE VENDOR DRAWINGS FOR ADDITIONAL FIELD WIRING.
5. ELECTRICAL INSTALLER TO FURNISH AND INSTALL LOCAL JUNCTION BOX FOR THE MSH AND TSH FURNISHED BY PUMP SUPPLIER.
6. CABLE SIZES / NO. OF CABLES HAVE BEEN ADJUSTED TO ACCOMMODATE VOLTAGE DROP.

90% SUBMITTAL - NOT FOR CONSTRUCTION

NO.	BY	CHK	APP	DATE	REVISIONS AND RECORD OF USE
B	JSL	TJZ	MJK	3/31/2020	90% SUBMITTAL
A	JSL	MJK	EVB	7/30/2019	60% SUBMITTAL

No. E 17748

BLACK & VEATCH

JOINT VENTURE

FILANC

BLACK & VEATCH

CITY OF MORRO BAY
MORRO BAY WRF
RECLAMATION FACILITY (WRF)

ELECTRICAL BUILDING
ELECTRICAL
80-ELEC-MCC-0001 ONE-LINE DIAGRAM

DESIGNED: JSL
DETAILED: SBC
CHECKED: TJZ
APPROVED: MJK
DATE: 3/31/2020

0 1/2 1
IF THIS BAR DOES NOT MEASURE 1" THEM DRAWING IS NOT TO FULL SCALE

PROJECT NO.
400530

80-E-702
SHEET
OF

F8900A
D400530
PLOTTED: 3/27/2020 7:51 AM FILE: C:\PWBatchPDF\Process\400530 - Morro Bay WRF\400530-80-E-702.dwg

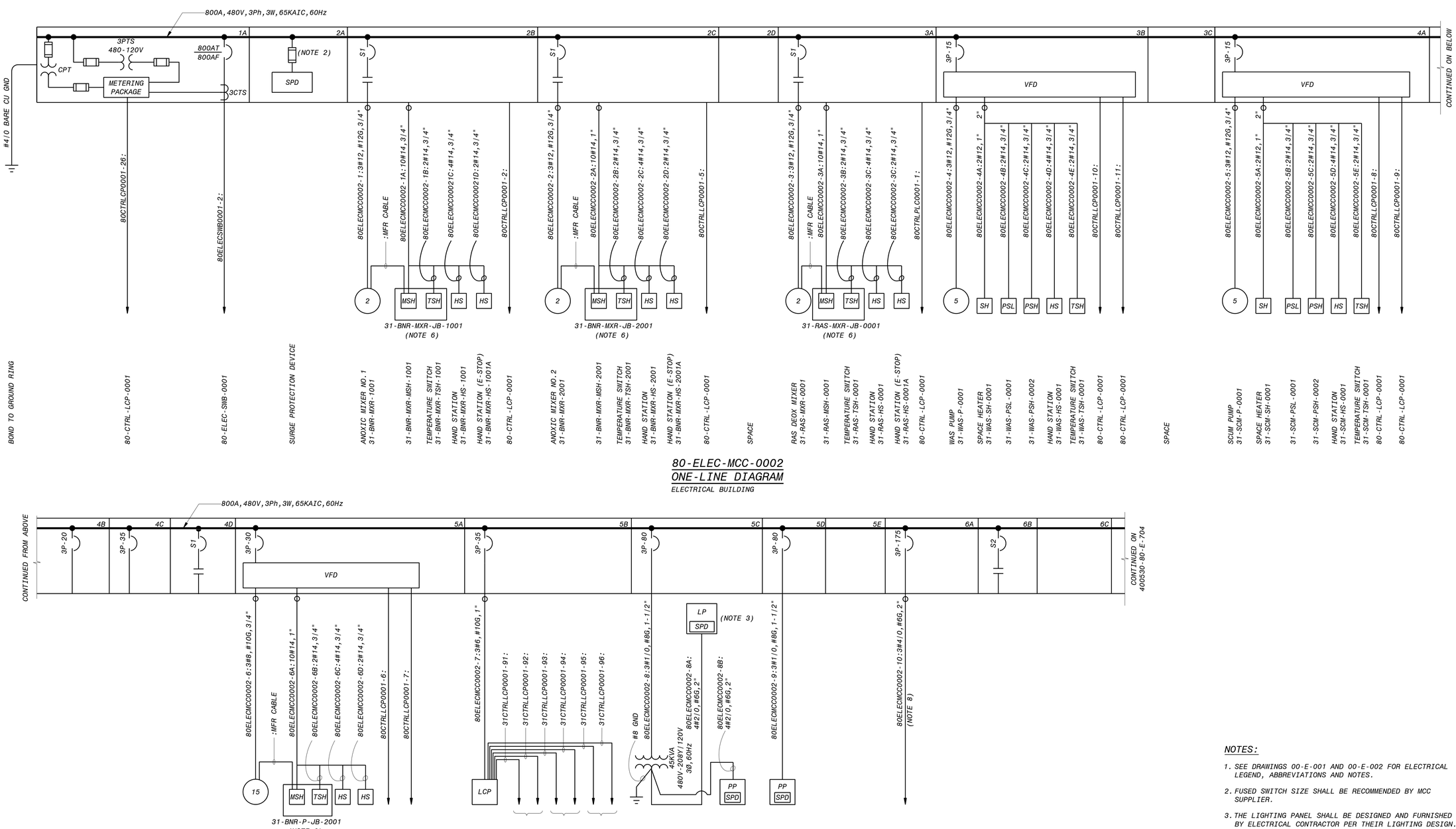

80-ELEC-MCC-0002
ONE-LINE DIAGRAM
ELECTRICAL BUILDING

80-ELEC-MCC-0002
ONE-LINE DIAGRAM
ELECTRICAL BUILDING

NOTES:

1. SEE DRAWINGS 00-E-001 AND 00-E-002 FOR ELECTRICAL LEGEND, ABBREVIATIONS AND NOTES.
2. FUSED SWITCH SIZE SHALL BE RECOMMENDED BY MCC SUPPLIER.
3. THE LIGHTING PANEL SHALL BE DESIGNED AND FURNISHED BY ELECTRICAL CONTRACTOR PER THEIR LIGHTING DESIGN.
4. 24V DC POWER CIRCUIT, 24V DC DIGITAL CIRCUITS AND 24V DC ANALOG CIRCUITS MAY BE COMBINED INTO SAME CONDUIT AS LONG AS THE CONDUIT FILL MEETS THE NEC REQUIREMENTS.
5. SEE VENDOR DRAWINGS FOR ADDITIONAL FIELD WIRING.
6. ELECTRICAL INSTALLER SHALL FURNISH AND INSTALL A LOCAL JUNCTION BOX FOR THE MSH AND TSH FURNISHED BY THE MIXER SUPPLIER.
7. VFD's SHALL BE PROVIDED WITH MOTOR WINDING RTD INPUT OR THERMOSTAT INTERLOCKS AS PER THE MOTOR SHOP DRAWING SUBMITTAL.
6. CABLE SIZES / NO. OF CABLES HAVE BEEN ADJUSTED TO ACCOMMODATE VOLTAGE DROP.

90% SUBMITTAL - NOT FOR CONSTRUCTION

NO.	BY	CHK	APP	DATE	REVISIONS AND RECORD OF USE
B	JSL	TJZ	MJK	3/31/2020	90% SUBMITTAL
A	JSL	MJK	EVB	7/30/2019	60% SUBMITTAL

No. E 17748

BLACK & VEATCH
JOINT VENTURE
FILANC
BLACK & VEATCH

CITY OF MORRO BAY
MORRO BAY WRF
RECLAMATION FACILITY (WRF)

ELECTRICAL BUILDING
ELECTRICAL
80-ELEC-MCC-0002 ONE-LINE DIAGRAM

DESIGNED:	JSL
DETAILED:	SBC
CHECKED:	TJZ
APPROVED:	MJK
DATE:	3/31/2020

0 1/2 1
IF THIS BAR DOES NOT MEASURE 1" THEN DRAWING IS NOT TO FULL SCALE

PROJECT NO.
400530

80-E-703
SHEET
OF

F08000A
D400330
PLOTTED: 3/27/2020 7:52 AM FILE: C:\PWBatchPDF\Process\400530 - Morro Bay WRF\400530-80-E-703.dwg

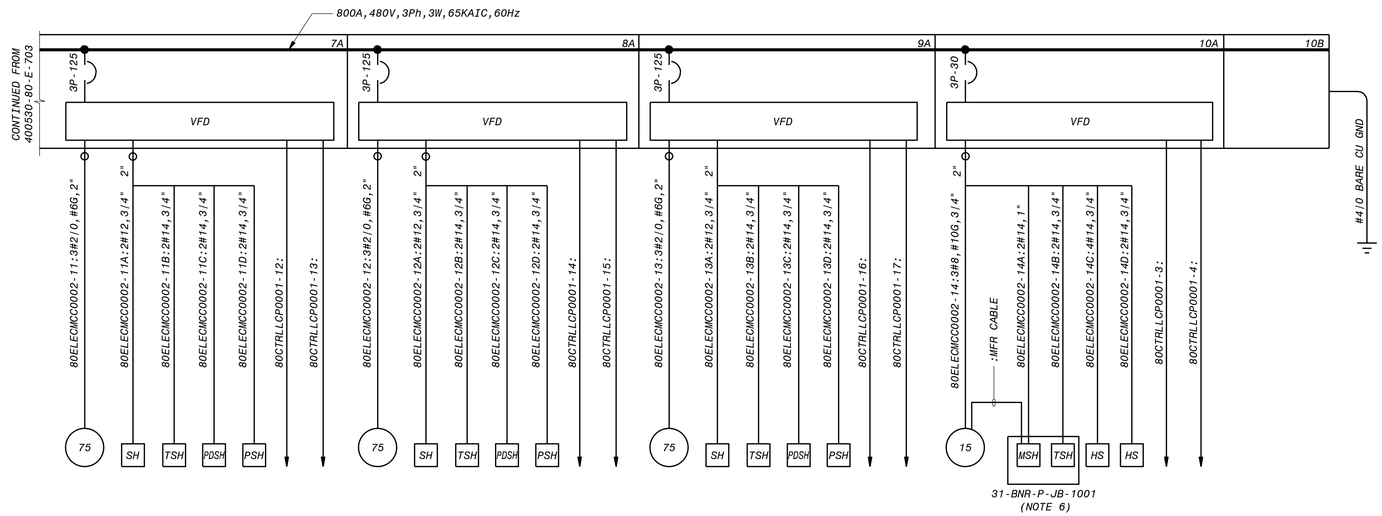

80-ELEC-MCC-0002
ONE-LINE DIAGRAM
ELECTRICAL BUILDING

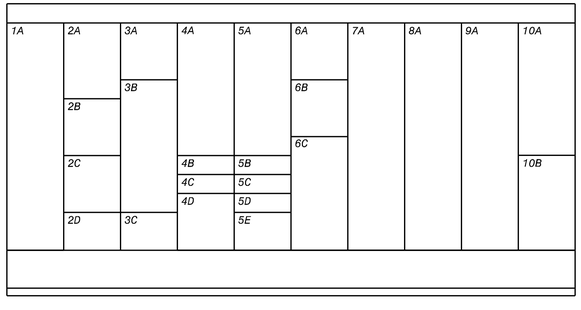

80-ELEC-MCC-0002
FRONT ELEVATION
ELECTRICAL BUILDING

NOTES:

1. SEE DRAWINGS 00-E-001 AND 00-E-002 FOR ELECTRICAL LEGEND, ABBREVIATIONS AND NOTES.
2. FUSED SWITCH SIZE SHALL BE RECOMMENDED BY MCC SUPPLIER.
3. THE LIGHTING PANEL SHALL BE DESIGNED AND FURNISHED BY ELECTRICAL CONTRACTOR PER THEIR LIGHTING DESIGN.
4. 24V DC POWER CIRCUIT, 24V DC DIGITAL CIRCUITS AND 24V DC ANALOG CIRCUITS MAY BE COMBINED INTO SAME CONDUIT AS LONG AS THE CONDUIT FILL MEETS THE NEC REQUIREMENTS.
5. SEE VENDOR DRAWINGS FOR ADDITIONAL FIELD WIRING.
6. ELECTRICAL INSTALLER SHALL FURNISH AND INSTALL A LOCAL JUNCTION BOX FOR THE MSH AND TSH FURNISHED BY THE MIXER SUPPLIER.
7. VFD's SHALL BE PROVIDED WITH MOTOR WINDING RTD INPUT OR THERMOSTAT INTERLOCKS AS PER THE MOTOR SHOP DRAWING SUBMITTAL.
8. CABLE SIZES | NO. OF CABLES HAVE BEEN ADJUSTED TO ACCOMMODATE VOLTAGE DROP.

90% SUBMITTAL - NOT FOR CONSTRUCTION

NO.	BY	CHK	APP	DATE	REVISIONS AND RECORD OF USE
B	JSL	TJZ	MJK	3/31/2020	90% SUBMITTAL
A	JSL	MJK	EVB	7/30/2019	60% SUBMITTAL

BLACK & VEATCH

JOINT VENTURE

FILANC

BLACK & VEATCH

CITY OF MORRO BAY
MORRO BAY WRF
RECLAMATION FACILITY (WRF)

ELECTRICAL BUILDING
ELECTRICAL
80-ELEC-MCC-0002 ONE-LINE DIAGRAM

DESIGNED: JSL
DETAILED: SBC
CHECKED: TJZ
APPROVED: MJK
DATE: 3/31/2020

0 1/2 1
IF THIS BAR DOES NOT MEASURE 1" THEN DRAWING IS NOT TO FULL SCALE

PROJECT NO.
400530

80-E-704
SHEET
OF

FB9000A
D400530
PLOTTED: 3/27/2020 8:55 PM FILE: C:\pw_working\bvw_americas\d0683637\400530-80-E-704.dwg

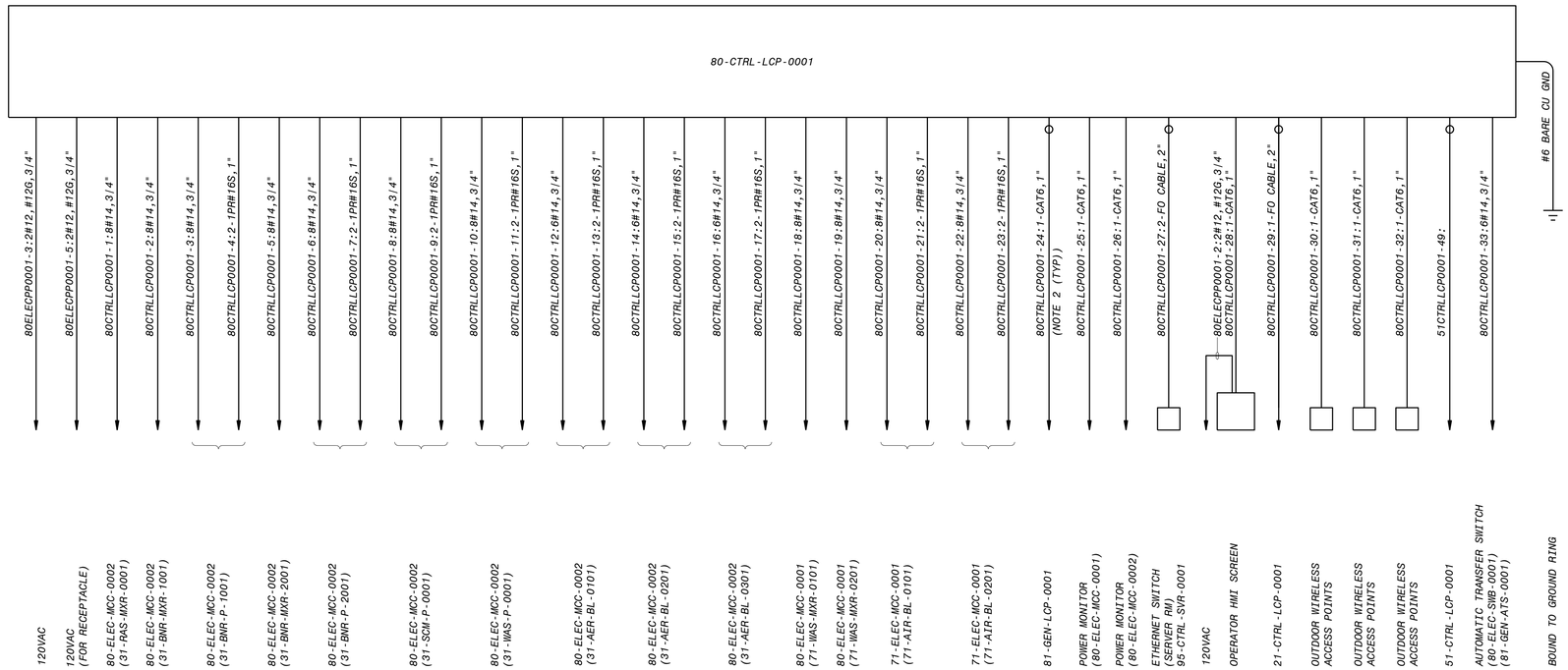

80-CTRL-LCP-0001
ONE-LINE DIAGRAM
ELECTRICAL BUILDING

NOTES:

1. SEE DRAWINGS 00-E-001 AND 00-E-002 FOR ELECTRICAL LEGEND, ABBREVIATIONS AND NOTES.
2. SEE DRAWING 00-I-701 FOR FIBRE OPTIC CABLE REQUIREMENT.
3. ALL CIRCUITS SHOWN ON THIS DRAWING WITHOUT THE DUCT SYMBOL SHALL BE FIELD ROUTED BY ELECTRICAL CONTRACTOR. ELECTRICAL CONTRACTOR TO DETERMINE IF THE CONDUITS SHALL BE BELOW GROUND OR ABOVE GROUND.

90% SUBMITTAL - NOT FOR CONSTRUCTION

NO.	BY	CHK	APP	DATE	REVISIONS AND RECORD OF USE
B	JSL	TJZ	MJK	3/31/2020	90% SUBMITTAL
A	JSL	MJK	EVB	7/30/2019	60% SUBMITTAL

BLACK & VEATCH
JOINT VENTURE
FILANC
BLACK & VEATCH

CITY OF MORRO BAY
MORRO BAY WRF
RECLAMATION FACILITY (WRF)

ELECTRICAL BUILDING
ELECTRICAL
80-CTRL-LCP-0001 ONE-LINE DIAGRAM

DESIGNED: JSL
DETAILED: SBC
CHECKED: TJZ
APPROVED: MJK
DATE: 3/31/2020

0 1/2 1
IF THIS BAR DOES NOT MEASURE 1" THEN DRAWING IS NOT TO FULL SCALE

PROJECT NO.
400530

80-E-711
SHEET
OF

FD9000A
D400330
PLOTTED: 3/27/2020 7:53 AM FILE: C:\PWBatchPDF\Process\400530 - Morro Bay WRF\400530-80-E-711.dwg

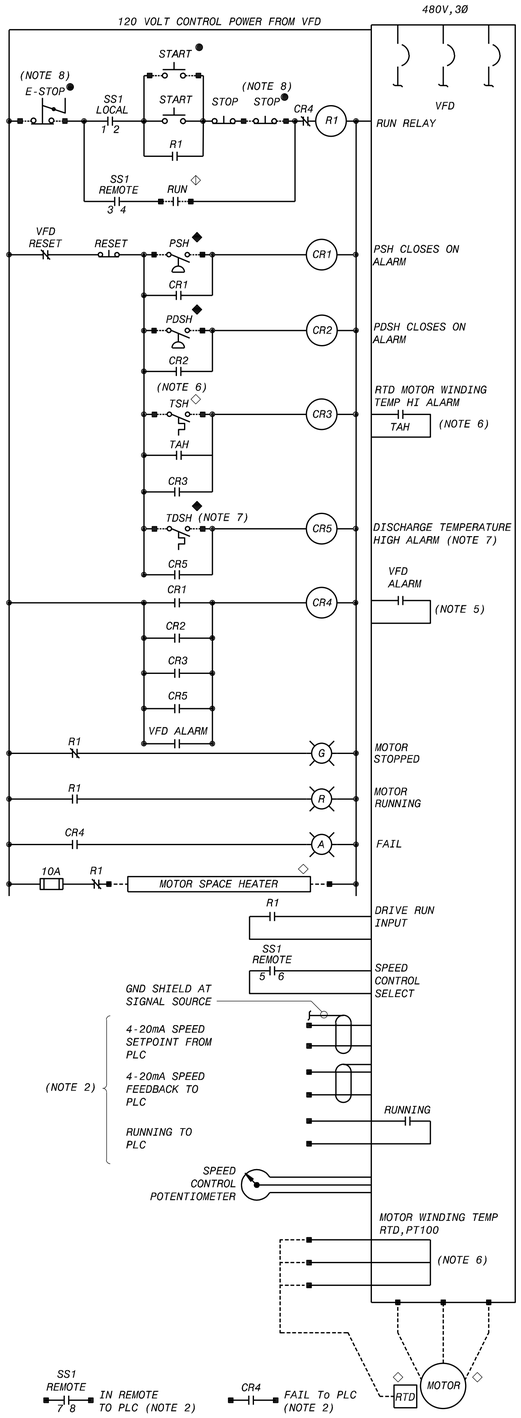

DRY-SCREW PROCESS AIR BLOWERS

31-AER-BL-0101,
31-AER-BL-0201,
31-AER-BL-0301

ROTARY LOBE SLUDGE HOLDING TANK BLOWERS

71-AIR-BL-0101,
71-AIR-BL-0201

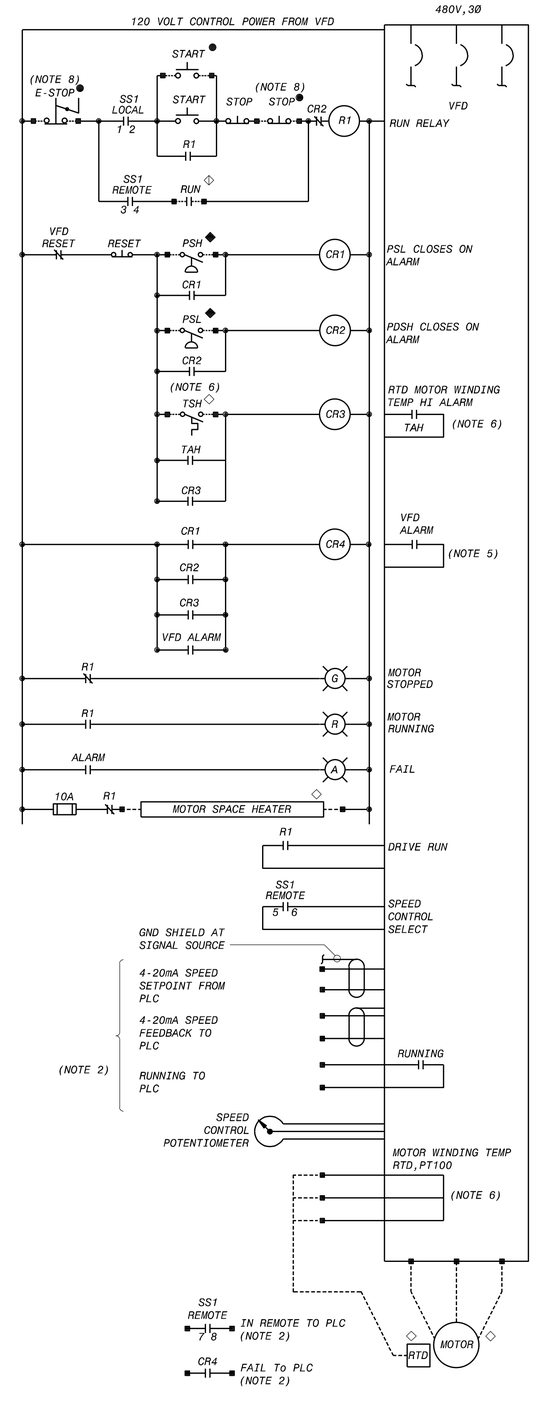

31-SCM-P-0001, 31-WAS-P-0001 SCUM PUMP, WAS PUMP

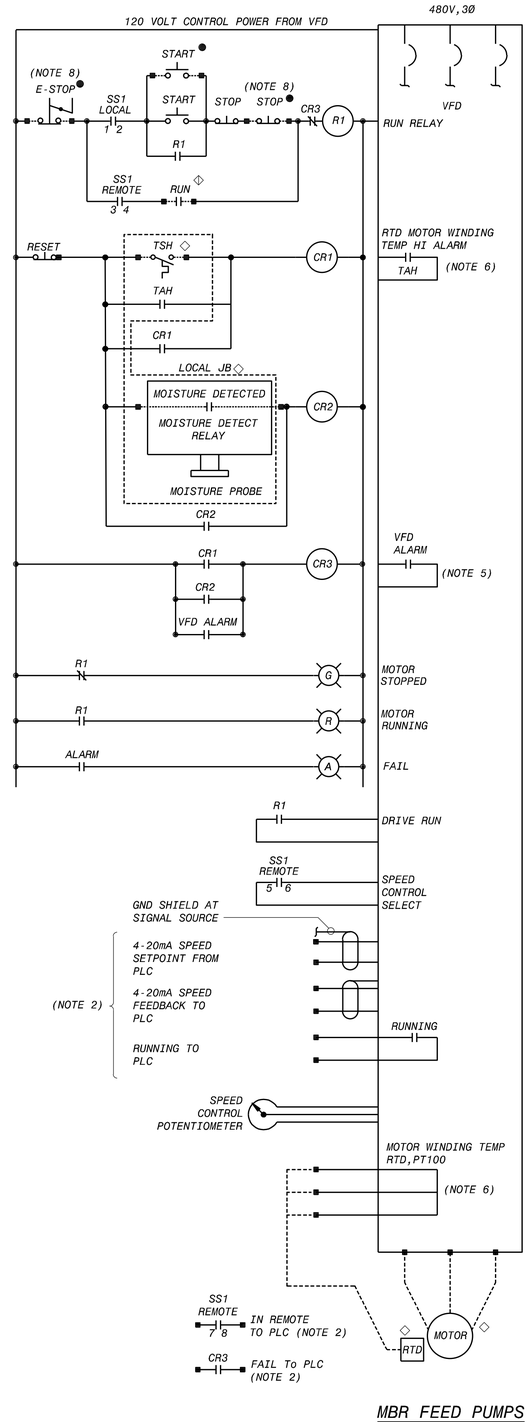

MBR FEED PUMPS

31-BNR-P-1001,
31-BNR-P-2001

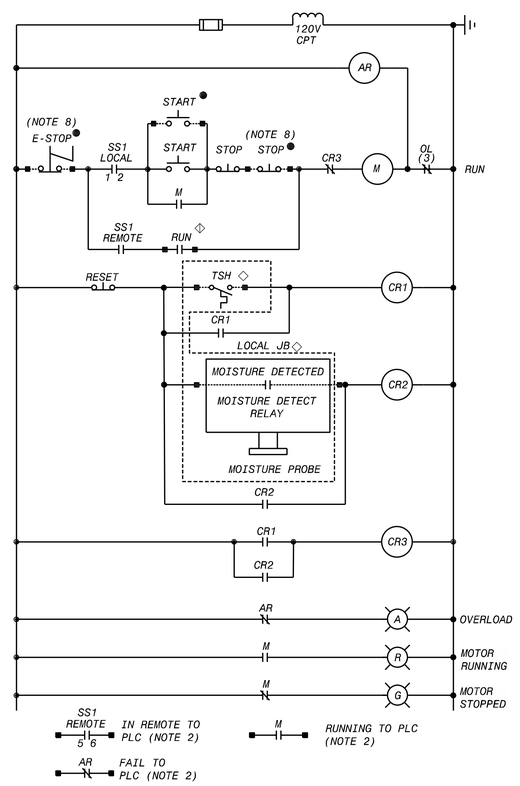

BNR MIXERS

RAS DEOX MIXER

31-RAS-MXR-0001

WAS MIXERS

71-WAS-MXR-0101,
71-WAS-MXR-0201

NEUTRALIZATION TANK MIXER

SS1 SWITCH DEVELOPMENT

31-BNR-MXR-1001, 31-BNR-MXR-2001 CONTACTS	POSITION		
	LOCAL	OFF	REMOTE
1-2	X		
3-4			X
5-6			X
7-8			X

LEGENDS:

- AT VALVE
- AT DRIVEN EQUIPMENT
- AT PLC/RIO PANEL
- REMOTE FROM STARTER AND DRIVEN EQUIPMENT
- AT CONTROL STATION
- AT DRIVE
- AT TCP

NOTES:

1. SEE DRAWINGS 00-E-001 AND 00-E-002 FOR ELECTRICAL LEGEND, ABBREVIATIONS AND NOTES.
2. REFER TO P&ID'S FOR PLC TAGS.
3. DEVICES SHOWN IN SCHEMATICS WITHOUT A SYMBOL ARE LOCATED AT THE MOTOR STARTER OR CONTROLLER.
4. PROVIDE ONE N.O AND N.C SPARE INTERLOCKS WITH EACH MOTOR STARTER.
5. ALL ALARM INPUTS SHALL STOP THE PUMP IN ALL CONTROL MODES.
6. IF THE MOTOR COMES WITH WINDING RTD THEN USE THE VFD HIGH TEMPERATURE CONTACT FOR THE CR2 RELAY IN LIEU OF THE TSH. VFD SHALL BE PROVIDED WITH MOTOR WINDING RTD INPUT OR THERMOSTAT INTERLOCKS AS PER THE MOTOR SHOP DRAWINGS SUBMITTAL.
7. TDSH CIRCUIT IS ONLY APPLICABLE FOR ROTARY LOBE SLUDGE HOLDING TANK BLOWERS.
8. THE SCHEMATIC SHOWN IS TYPICAL. REFER TO P&IDs OR OTHER ELECTRICAL DRAWINGS FOR E-STOP/START/STOP REQUIREMENTS. IF NO ESTOP AND LOCAL STOP ARE PROVIDED, PROVIDE A JUMPER FOR THE INPUT.

NO.	BY	CHK	APP
A	JSL	TJZ	MJK

REVISIONS AND RECORD OF USE

90% SUBMITTAL — 3/31/2020 — DATE

No. E 17748

BLACK & VEATCH

JOINT VENTURE

BLACK & VEATCH

FILANC

CITY OF MORRO BAY
MORRO BAY WRF
RECLAMATION FACILITY (WRF)

ELECTRICAL BUILDING
ELECTRICAL
SCHEMATIC

DESIGNED:	JSL
DETAILED:	SBC
CHECKED:	TJZ
APPROVED:	MJK
DATE:	3/31/2020

0 1/2 1

IF THIS BAR DOES NOT MEASURE 1" THEN DRAWING IS NOT TO FULL SCALE

PROJECT NO.
400530

80-E-721
SHEET
OF

90% SUBMITTAL - NOT FOR CONSTRUCTION

F09000A
D400330
PLOTTED: 3/27/2020 8:59 PM FILE: C:\pw_working\bvw_americas\d0683637\400530-80-E-721.dwg

GROUND ROD WITH TEST WELL
#4/0 GND TO FOUNDATION REINFORCING
CHEMICAL CONTAINMENT BASIN WITH INTERGRAL SCALE (TYP OF 4)
CHEMICAL TOTE (TYP OF 4)
#4/0 GND RING (TYP)
#4/0 GND TO METAL UNDERGROUND WATER PIPING
SEE DRAWING 10-E-100 FOR CONTINUATION
12 10-E-603 E
#6 GND TO 90-CTRL-LCP-0001

LAS-WE-0001
LAS-WIT-0001
LAS-WE-0002
LAS-WIT-0002
LAS-WE-0002
LAS-FSH-0001
LAS-LCP-0001

CA-WE-0002
CA-WIT-0001
CA-WE-0001
CA-WIT-0002
CA-FSH-0001
CA-LCP-0101
CA-LCP-0201
CITRIC ACID AREA

NHS-WIT-0002
NHS-WE-0002
NHS-FSH-0001
NHS-WIT-0001
90-PLUM-EWH-0001
NHS-LCP-0001
NHS-WE-0001
SODIUM BISULFITE AREA

HS04-FSH-0001
HS04-LCP-0101
HS04-LCP-0201
HS04-WIT-0001
HS04-WE-0001
HS04-TIT-010X
HS04-TE-010X
HS04-AIT-010X
HS04-AE-010X
HS04-TIT-020X
HS04-TE-020X
HS04-AIT-020X
HS04-AE-020X
HS04-WIT-0002
HS04-WE-0002
SULFURIC ACID AREA
SULPURIC ACID DILUTION PANEL
HS04-PNL-0001

AREA TYPE 4X

ANTI-LCP-0001
ANTI-WE-0002
ANTI-WIT-0002
ANTI-FSH-0001
ANTI-WE-0001
ANTI-WIT-0001
ANTISCALANT AREA

NAOH-LCP-0301
NAOH-LCP-0101
NAOH-LCP-0201
NAOHL-LIT-0001
NAOH-LSH-0002
NAOH-T-0001
SODIUM HYDROXIDE UNLOADING PANEL
SODIUM HYPOCHLORITE STORAGE TANK

TRUCK UNLOADING AREA
NOCL-FSH-0001
SODIUM HYPOCHLORITE UNLOADING PANEL
90-CTRL-LCP-0001
NOCL-LCP-0501
NOCL-LCP-0601
NOCL-LCP-0701
NOCL-LCP-0401
NAOH-FSH-0001
NOCL-LCP-0301
NOCL-LCP-0201
NOCL-LCP-0101
NOCL-LIT-0001
NOCL-LSH-0002
NOCL-T-0001
SODIUM HYPOCHLORITE TANK

#4/0 GND TO FOUNDATION REINFORCING

GROUND ROD (TYP OF 3)
#4/0 GND TO BUILDING STEEL
#4/0 GND TO METAL UNDERGROUND WATER PIPING

NOTES:

1. SEE DRAWING 00-E-001 AND 00-E-002 FOR ELECTRICAL LEGENDS, ABBREVIATIONS AND NOTES.
2. SEE DRAWING 10-E-100 FOR OVERALL ELECTRICAL SITE PLAN.
3. PROVIDE AT LEAST TWO #4/0 GROUND TO EACH OF THE METAL TANKS.
4. FOR CABLE DUCT BANK ENTRY REFER TO SITE OVERALL POWER PLAN (10-E-100).
5. ALL THE TAGS ARE PRECEDED BY AREA CODE 90 UNLESS OTHERWISE NOTED.
6. SEE DRAWING 10-E-603 FOR DUCT BANK SECTION.

CHEMICAL FACILITY POWER AND GROUNDING PLAN

3/8" = 1'-0"

12" 0' 1' 2' 3' 4' 5' 6' 7'
3/8" = 1'-0"

90% SUBMITTAL- NOT FOR CONSTRUCTION

NO.	BY	CHK	APP	DATE	REVISIONS AND RECORD OF USE
B	JSL	MAS	MJK	3/31/2020	90% SUBMITTAL
A	JSL	MJK	EVB	7/30/2019	60% SUBMITTAL

REGISTERED PROFESSIONAL ENGINEER
MARK A. KLEVEN
No. E 17748
ELECTRICAL
STATE OF CALIFORNIA

BLACK & VEATCH
JOINT VENTURE
FILANC
BLACK & VEATCH

CITY OF MORRO BAY
MORRO BAY WATER RECLAMATION FACILITY (WRF)

CHEMICAL FACILITY ELECTRICAL POWER AND GROUNDING PLAN

DESIGNED: JSL
DETAILED: SBC
CHECKED: MAS
APPROVED: MJK
DATE: 3/31/2020

0 1/2 1
IF THIS BAR DOES NOT MEASURE 1" THEN DRAWING IS NOT TO FULL SCALE

PROJECT NO. 400530

90-E-101
SHEET OF

PLOTTED: 27-03-2020 18:18:33
D400530

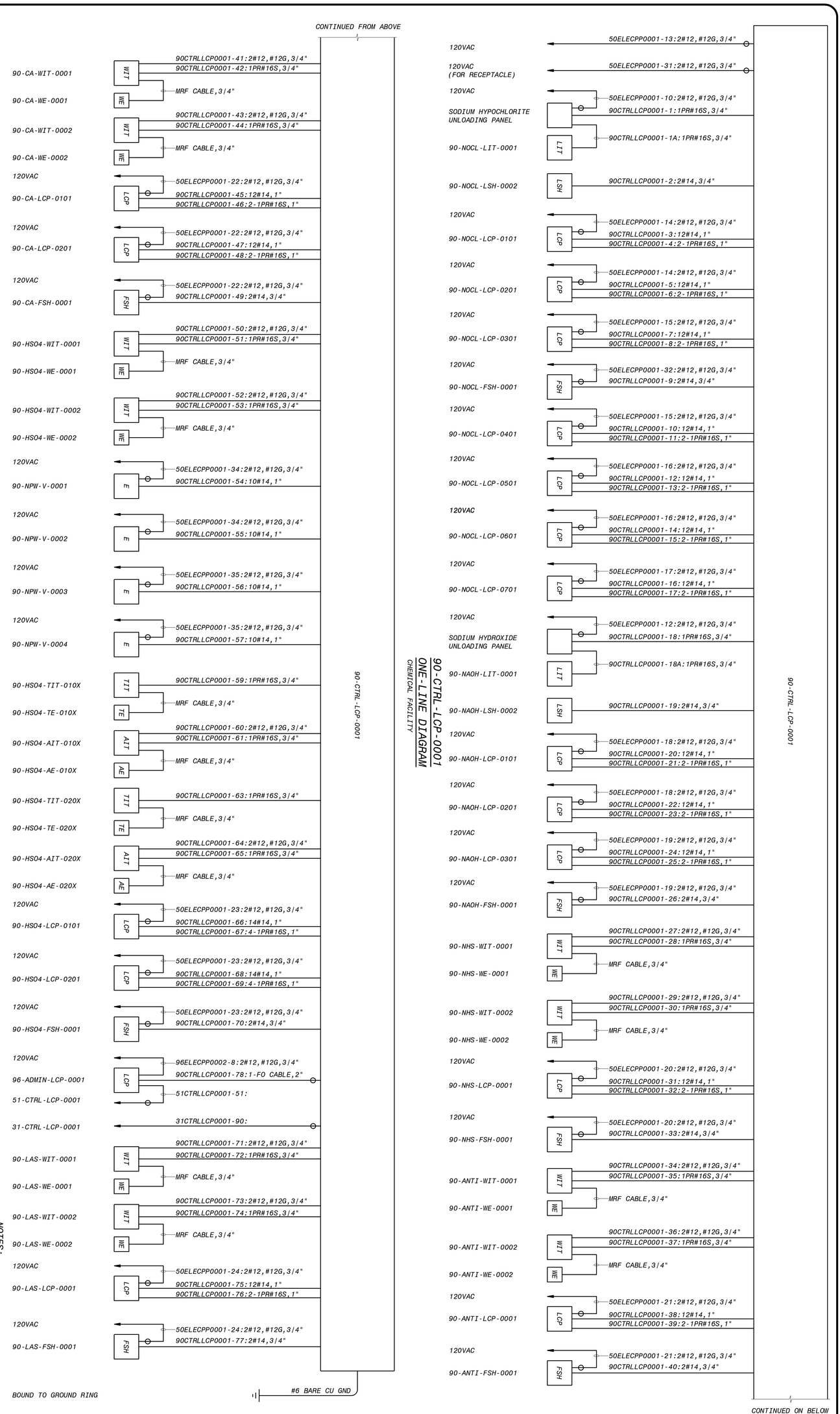

90% SUBMITTAL - NOT FOR CONSTRUCTION

NOTES:

1. SEE DRAWINGS 00-E-001 AND 00-E-002 FOR ELECTRICAL LEGEND, ABBREVIATIONS AND NOTES.
2. SEE DRAWING 00-I-701 FOR FIBER OPTIC CABLE REQUIREMENTS.
3. ALL CIRCUITS SHOWN ON THIS DRAWING WITHOUT THE DUCT SYMBOL SHALL BE FIELD ROUTED BY ELECTRICAL CONTRACTOR. ELECTRICAL CONTRACTOR TO DETERMINE IF THE CONDUITS SHALL BE BELOW GROUND OR ABOVE GROUND.
4. 24V DC POWER CIRCUIT, 24V DC DIGITAL CIRCUITS AND 24V DC ANALOG CIRCUITS MAY BE COMBINED INTO THE SAME CONDUIT AS LONG AS THE CONDUIT FILL MEETS THE NEC REQUIREMENTS.

DESIGNED: JSL					
DETAILED: SBC					
CHECKED: MAS					
APPROVED: MJK					
DATE: 3/31/2020					
0 1/2 1					
IF THIS BAR DOES NOT MEASURE 1" THEN DRAWING IS NOT PLOTTED AT FULL SCALE					
PROJECT NO. 400530					
SHEET OF 90-E-711					

CITY OF MORRO BAY
MORRO BAY WRF
RECLAMATION FACILITY (WRF)

CHEMICAL FACILITY
ELECTRICAL
90-CTRL-LCP-0001 ONE-LINE DIAGRAM

BLACK & VEATCH
JOINT VENTURE
FILANC BLACK & VEATCH

DATE	REVISIONS AND RECORD OF USE	NO.	BY	CHK	APP
3/31/2020	90% SUBMITTAL	B	JSL	MAS	MJK
7/30/2019	60% SUBMITTAL	A	JSL	MJK	EVB

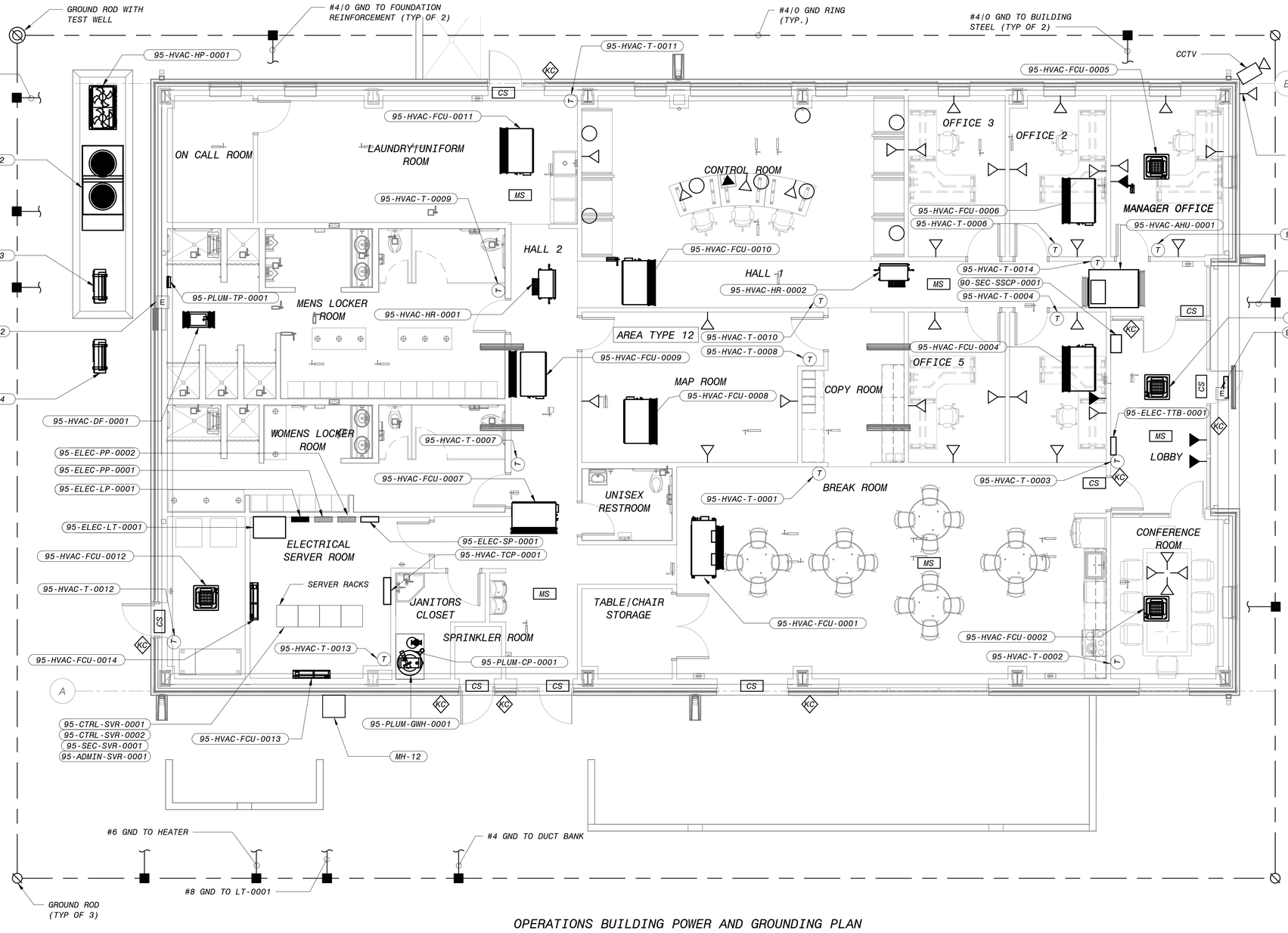

OPERATIONS BUILDING POWER AND GROUNDING PLAN

3/16" = 1'-0"

NOTES:

1. SEE DRAWINGS 00-E-001 AND 00-E-002 FOR ELECTRICAL LEGENDS, ABBREVIATIONS AND NOTES.
2. SEE DRAWING 10-E-100 FOR OVERALL ELECTRICAL SITE PLAN.
3. FOR CABLE DUCT ENTRY REFER TO SITE OVERALL POWER PLAN (10-E-100).
4. SEE DRAWING 10-E-603 FOR DUCT BANK SECTION.

LEGENDS:

SYMBOL	DESCRIPTION
▽	ADMINISTRATIVE NETWORK OUTLET
○	PLANT CONTROL SYSTEM (PCS) NETWORK OUTLET
▼	TELEPHONE FLOOR OUTLET
▼	TELEPHONE OUTLET
SSCP	SECURITY SYSTEM CONTROL PANEL
MS	MOTION SENSOR
CS	CONTACT SWITCH (DOOR)
DS	DOOR SWITCH
KC	CARD READER

NO.	BY	CHK	APP	DATE	REVISIONS AND RECORD OF USE
B	JSL	MAS	MJK	3/31/2020	90% SUBMITTAL
A	JSL	MJK	EVB	7/30/2019	60% SUBMITTAL

REGISTERED PROFESSIONAL ENGINEER
MARK J. KLEVETER
No. E 17748
ELECTRICAL
STATE OF CALIFORNIA

BLACK & VEATCH
JOINT VENTURE
BLACK & VEATCH
FILANC

CITY OF MORRO BAY
MORRO BAY WRF
RECLAMATION FACILITY (WRF)

OPERATIONS BUILDING
ELECTRICAL
POWER AND GROUNDING PLAN

DESIGNED: JSL
DETAILED: SBC
CHECKED: MAS
APPROVED: MJK
DATE: 3/31/2020

0 1/2 1
IF THIS BAR DOES NOT MEASURE 1" THEN DRAWING IS NOT TO FULL SCALE

PROJECT NO.
400530

95-E-101
SHEET
OF

6" 4' 2' 0' 5' 10'
3/16" = 1'-0"

90% SUBMITTAL- NOT FOR CONSTRUCTION

PLOTTED: 27-03-2020 18:17:20
D400530

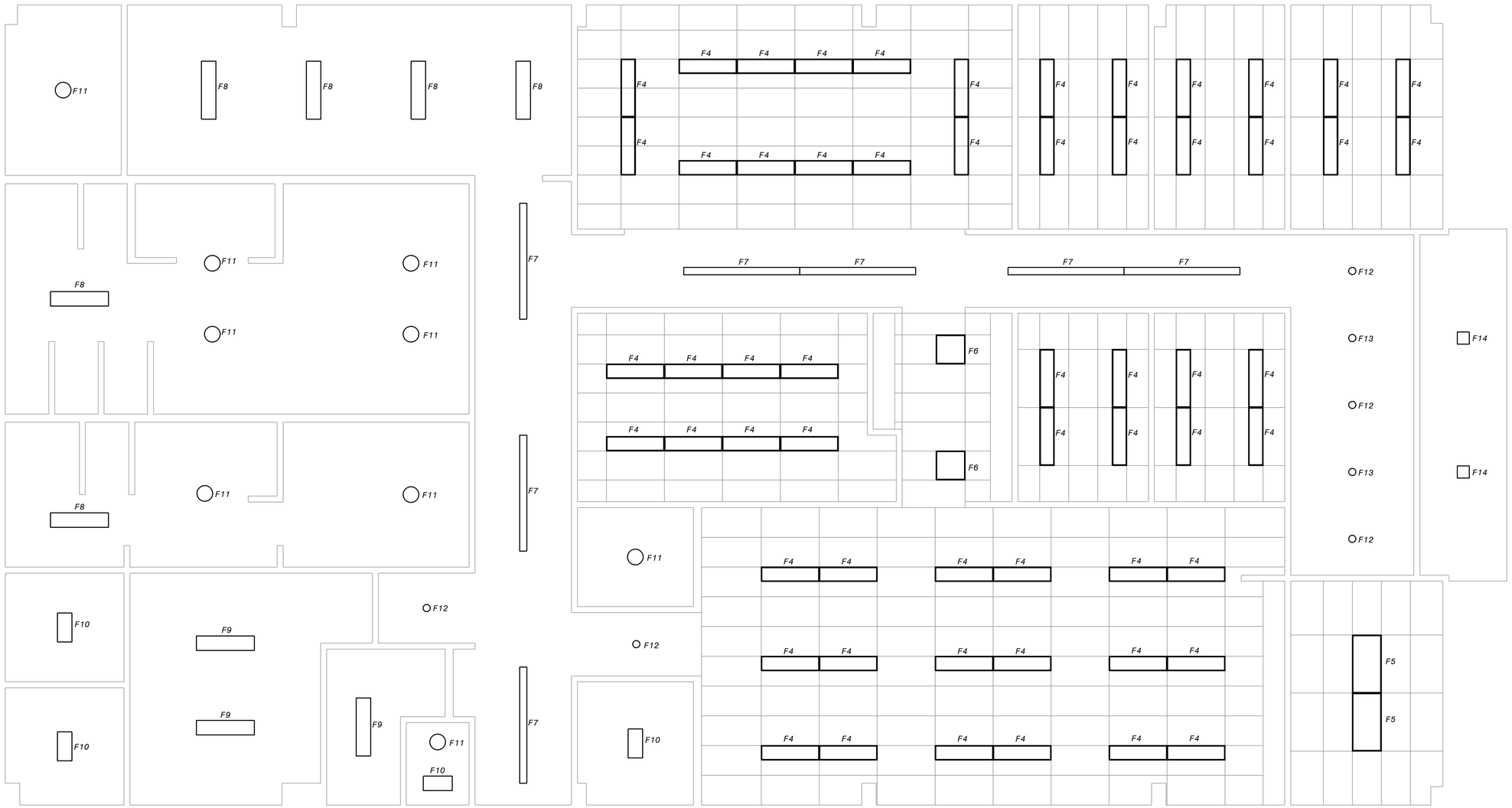

OPERATIONS BUILDING LIGHTING PLAN

1/4"=1'-0"

LIGHTING FIXTURE SCHEDULE	
FIXTURE	**DESCRIPTION**
F4	1' X 4' RECESSED DIRECT / INDIRECT LED TROFFER.
F5	2' X 4' RECESSED DIRECT / INDIRECT LED TROFFER.
F6	2' X 2' RECESSED DIRECT / INDIRECT LED TROFFER.
F7	8' LONG DIRECT / INDIRECT LED SURFACE STRIP LIGHT.
F8	1' X 4' SURFCAE LED WRAPAROUND FIXTURE.
F9	1' X 4' SURFACE LED UTILITY FIXTURE.
F10	1' X 2' SURFACE LED UTILITY FIXTURE.
F11	13" DIA. SURFACE LED SLIM ROUND FIXTURE.
F12	6" DIA. RECESSED LED WIDE ANGLE DOWNLIGHT FIXTURE.
F13	6" DIA. RECESSED LED ADJUSTABLE SPOT FIXTURE.
F14	10" X 10" SURFACE LED WET LOCATION FIXTURE.

NOTES:

1. SEE DRAWINGS 00-E-001 AND 00-E-002 FOR ELECTRICAL LEGEND, ABBREVIATIONS AND NOTES.

4' 2' 0 4' 8'

1/4"=1'-0"

90% SUBMITTAL - NOT FOR CONSTRUCTION

NO.	BY	CHK	APP
B	JSL	MAS	MJK
A	JSL	MJK	EVB

DATE	REVISIONS AND RECORD OF USE
3/31/2020	90% SUBMITTAL
7/30/2019	60% SUBMITTAL

No. E 17748

BLACK & VEATCH

JOINT VENTURE

FILANC

BLACK & VEATCH

CITY OF MORRO BAY
MORRO BAY WRF
RECLAMATION FACILITY (WRF)

OPERATIONS BUILDING
ELECTRICAL
LIGHTING PLAN

DESIGNED: JSL
DETAILED: SBC
CHECKED: MAS
APPROVED: MJK
DATE: 3/31/2020

0 1/2 1

IF THIS BAR DOES NOT MEASURE 1" THEN DRAWING IS NOT TO FULL SCALE

PROJECT NO.
400530

95-E-111
SHEET
OF

FD9000A
D400530
PLOTTED: 3/27/2020 7:52 PM FILE: C:\pw_working\bvw_americas\d0683837\400530-95-E-111.dwg

			PANELBOARD: 95-ELEC-PP-0001		BUS: COPPER			MAINS: 3P-300A MAIN BREAKER			
PHASE			SERVICE: 480V 3PH, 3W		RATING: 300A			LOCATION: OPERATIONS BUILDING		PHASE	
"A"	"B"	"C"	MOUNTING: SURFACE							"A"	"B"	"C"
V.A.	V.A.	V.A.	LOAD	P	BKR	CKT #	BKR	P	LOAD	V.A.	V.A.	V.A.
11640	11640	11640	95-HVAC-HP-0001	3	60	1 2	60	3	95-HVAC-HP-0002	12194	11640	11640
12471	12471	12471	95-HVAC-AHU-0001	3	60	3 4	20	3	95-HVAC-DF-0001	259	259	259
0	0	0	SPARE	3	20	5 6	20	3	SPARE	0	0	0
15000	15000	15000	95-ELEC-LT-0001 (45KVA,480-208Y/120V,3PH,60HZ) (FEEDING 95-ELEC-PP-0002 AND 95-ELEC-LP-0001) (NOTE 2)	3	80	7 8	20	3	SPARE	0	0	0
333	333	333	MOTOR OPERATED SECURED PLANT AREA ACCESS GATE	3	20	9 10	20	3	SPARE	0	0	0
0	0	0	SPARE	3	20	11 12	20	3	SPARE	0	0	0
0	0	0	SPARE	3	20	13 14	20	3	SPARE	0	0	0
0	0	0	SPARE	3	20	15 16	20	3	SPARE	0	0	0
0	0	0	SPARE	3	20	17 18	20	3	SPARE	0	0	0
0	0	0	SPARE	3	20	19 20	60	3	SPARE	0	0	0
0	0	0	SPARE	3	20	21 22	60	3	SPARE	0	0	0
0	0	0	SPARE	3	20	23 24	30	3	SPARE	0	0	0
0	0	0	SPARE	3	30	25 26	30	3	SPARE	0	0	0
0	0	0	SPARE	3	30	27 28	20	3	SPARE	0	0	0
39444			TOTAL "A"			51897			TOTAL "A"	12453		
	39444		TOTAL "B"			51343			TOTAL "B"		11899	
		39444	TOTAL "C"			51343			TOTAL "C"			11899
			TOTAL			154583						

95-ELEC-PP-0001
POWER PANELS SCHEDULE
OPERATIONS BUILDING

			PANELBOARD: 95-ELEC-PP-0002		BUS: COPPER			MAINS: 3P-225A MAIN BREAKER			
PHASE			SERVICE: 120/208V, 3PH, 4W		RATING: 225A			LOCATION: OPERATIONS BUILDING		PHASE	
"A"	"B"	"C"	MOUNTING: SURFACE							"A"	"B"	"C"
V.A.	V.A.	V.A.	LOAD	P	BKR	CKT #	BKR	P	LOAD	V.A.	V.A.	V.A.
466			95-HVAC-FCU-0002	2	20	1 2	20	2	95-HVAC-FCU-0001	466		
	466			-	-	3 4	-	-			466	
		466	95-HVAC-FCU-0004	2	20	5 6	20	2	95-HVAC-FCU-0003			466
466				-	-	7 8	-	-		466		
	466		95-HVAC-FCU-0006	2	20	9 10	20	2	95-HVAC-FCU-0005		466	
		466		-	-	11 12	-	-				466
466			95-HVAC-FCU-0007	2	20	13 14	20	1	HAND DRYER NO.1, HAND DRYER NO.2	1000		
	466			-	-	15 16	20	1	95-PLUM-TP-0001		250	
		233	95-HVAC-HR-0001	2	20	17 18	20	2	95-HVAC-FCU-0008			466
233				-	-	19 20	-	-		466		
	233		95-HVAC-HR-0002	2	20	21 22	30	2	95-HVAC-HP-0004		2600	
		233		-	-	23 24	-	-				2600
466			95-HVAC-FCU-0009	2	20	25 26	20	2	95-HVAC-FCU-0010	466		
	466			-	-	27 28	-	-			466	
		466	95-HVAC-FCU-0011	2	20	29 30	20	2	95-HVAC-FCU-0012			466
466				-	-	31 32	-	-		466		
	466		95-HVAC-FCU-0013	2	20	33 34	20	2	95-HVAC-FCU-0014		466	
		466		-	-	35 36	-	-				466
500			MOTOR OPERATED SECURED PLANT AREA ACCESS GATE	1	20	37 38	30	2	95-HVAC-HP-0003	2600		
	500		COMPOSITE SAMPLER (65-TW-SAMP-0001)	1	20	39 40	-	-			2600	
		1000	95-PLUM-GWH-0001, 95-PLUM-CP-0001	1	20	41 42	20	1	95-HVAC-TCP-0001			500
3064			TOTAL "A"			8996			TOTAL "A"	5931		
	3064		TOTAL "B"			10379			TOTAL "B"		7315	
		3331	TOTAL "C"			8763			TOTAL "C"			5431
			TOTAL			28138						

95-ELEC-PP-0002
POWER PANELS SCHEDULE
OPERATIONS BUILDING

NOTES:

1. SEE DRAWINGS 00-E-001 AND 00-E-002 FOR ELECTRICAL LEGEND, ABBREVIATIONS AND NOTES.
2. TAP OF TRANSFORMER IS ADJUSTED TO ACCOMODATE VOLTAGE DROP.
3. PROVIDE MINIMUM #12, #12G CABLE AND 3/4" CONDUIT FOR 20A CIRCUIT; MINIMUM #8, #10G CABLE AND 3/4" CONDUIT FOR 30A CIRCUIT; MINIMUM #2, #10G CABLE AND 1-1/4" CONDUIT FOR 60A CIRCUIT; MINIMUM #1/0, #8G CABLE AND 1-1/2" CONDUIT FOR 80A CIRCUIT.
4. THE SINGLE PHASE LIGHTING PANEL SHALL BE RATED FOR 200A OR LESS.

90% SUBMITTAL - NOT FOR CONSTRUCTION

NO.	BY	CHK	APP'D	DATE	REVISIONS AND RECORD OF USE
B	JSL	MAS	MJK	3/31/2020	90% SUBMITTAL
A	JSL	MJK	EVB	7/30/2019	60% SUBMITTAL

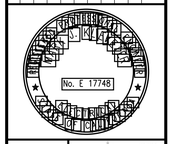

BLACK & VEATCH
JOINT VENTURE
BLACK & VEATCH
FILANC

CITY OF MORRO BAY
MORRO BAY WRF
RECLAMATION FACILITY (WRF)

OPERATIONS BUILDING
ELECTRICAL
POWER PANELS SCHEDULE

DESIGNED: JSL
DETAILED: SBC
CHECKED: MAS
APPROVED: MJK
DATE: 3/31/2020

0 1/2 1
IF THIS BAR DOES NOT MEASURE 1" THEN DRAWING IS NOT TO FULL SCALE

PROJECT NO.
400530

95-E-601
SHEET
OF

FB9000A
D400530
PLOTTED: 3/31/2020 10:09 AM FILE: C:\pw_working\bvw_americas\d0683637\400530-95-E-601.dwg

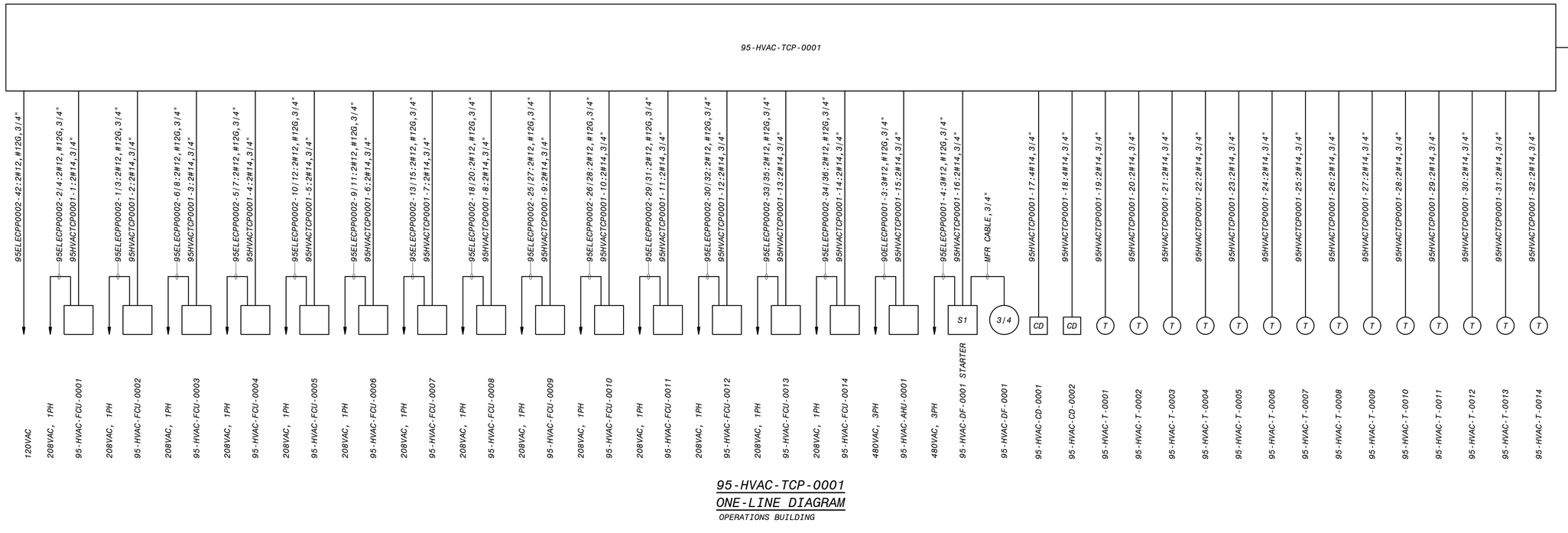

95-HVAC-TCP-0001
ONE-LINE DIAGRAM
OPERATIONS BUILDING

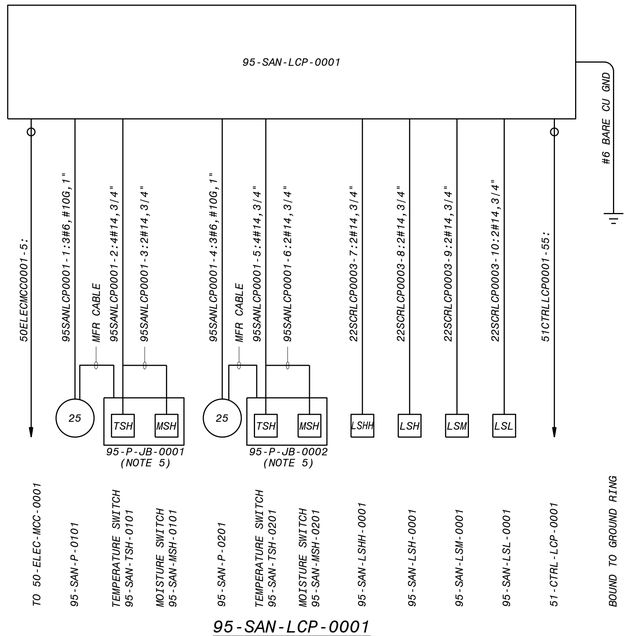

95-SAN-LCP-0001
ONE-LINE DIAGRAM
SANITARY LIFT STATION

NOTES:

1. SEE DRAWINGS 00-E-001 AND 00-E-002 FOR ELECTRICAL LEGEND, ABBREVIATIONS AND NOTES.
2. ALL CIRCUITS SHOWN ON THIS DRAWING WITHOUT THE DUCT SYMBOL SHALL BE FIELD ROUTED BY ELECTRICAL CONTRACTOR. ELECTRICAL CONTRACTOR TO DETERMINE IF THE CONDUITS SHALL BE BELOW GROUND OR ABOVE GROUND.
3. 24V DC POWER CIRCUIT, 24V DC DIGITAL CIRCUITS AND 24V DC ANALOG CIRCUITS MAY BE COMBINED INTO THE SAME CONDUIT AS LONG AS THE CONDUIT FILL MEETS THE NEC REQUIREMENTS.
4. THE MINICAS RELAY FOR THE SUBMERSIBLE PUMPS SHALL BE PROVIDED BY THE PUMP SUPPLIER.
5. ELECTRICAL INSTALLER TO FURNISH AND INSTALL LOCAL JUNCTION BOX FOR THE MSH AND TSH FURNISHED BY PUMP SUPPLIER.

90% SUBMITTAL - NOT FOR CONSTRUCTION

NO.	BY	CHK	APP'D	DATE	REVISIONS AND RECORD OF USE
A	JSL	MAS	MJK	3/31/2020	90% SUBMITTAL

BLACK & VEATCH
JOINT VENTURE
FILANC
BLACK & VEATCH

CITY OF MORRO BAY
MORRO BAY WRF
RECLAMATION FACILITY (WRF)

OPERATIONS BUILDING
ELECTRICAL
MISCELLANEOUS ONE-LINE DIAGRAM

DESIGNED: JSL
DETAILED: SBC
CHECKED: MAS
APPROVED: MJK
DATE: 3/31/2020

0 1/2 1
IF THIS BAR DOES NOT MEASURE 1" THEN DRAWING IS NOT TO FULL SCALE

PROJECT NO.
400530

95-E-711
SHEET
OF

FB9000A
D400530
PLOTTED: 3/27/2020 7:55 AM FILE: C:\PWBatchPDF\Process\400530 - Morro Bay WRF\400530-95-E-711.dwg

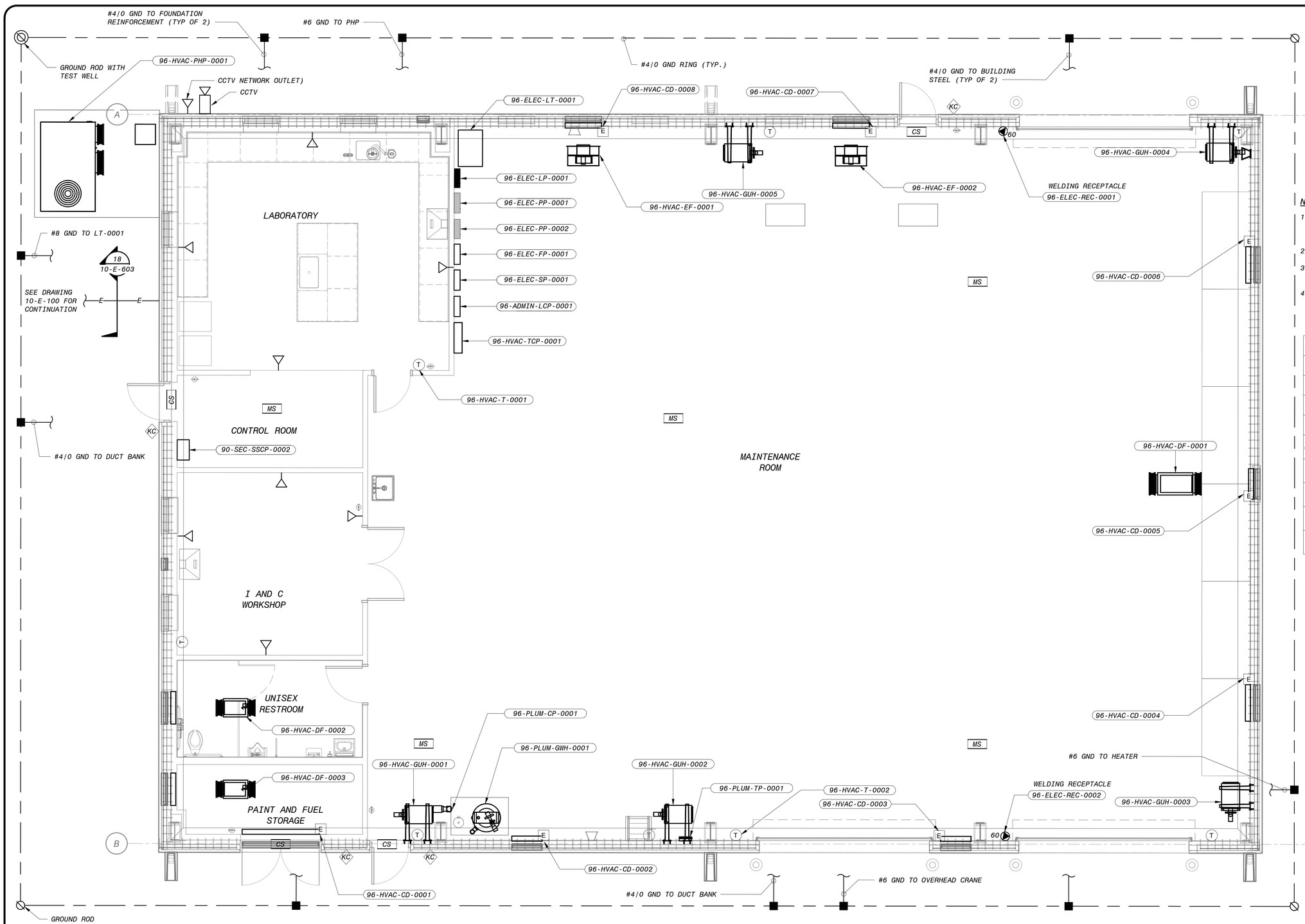

MAINTENANCE BUILDING POWER AND GROUNDING PLAN

1/4" = 1'-0"

4' 2' 0' 4' 8'

1/4" = 1'-0"

NOTES:

1. SEE DRAWINGS 00-E-001 AND 00-E-002 FOR ELECTRICAL LEGENDS, ABBREVIATIONS AND NOTES.
2. SEE DRAWING 10-E-100 FOR OVERALL ELECTRICAL SITE PLAN.
3. FOR CABLE DUCT ENTRY REFER TO SITE OVERALL POWER PLAN (10-E-100).
4. SEE DRAWING 10-E-603 FOR DUCT BANK SECTION.

LEGENDS:

SYMBOL	DESCRIPTION
	ADMINISTRATIVE NETWORK OUTLET
	PLANT CONTROL SYSTEM (PCS) NETWORK OUTLET
	TELEPHONE FLOOR OUTLET
	TELEPHONE OUTLET
SSCP	SECURITY SYSTEM CONTROL PANEL
MS	MOTION SENSOR
CS	CONTACT SWITCH (DOOR)
DS	DOOR SWITCH
KC	CARD READER

NO.	BY	CHK	APP	DATE	REVISIONS AND RECORD OF USE
B	JSL	MAS	MJK	3/31/2020	90% SUBMITTAL
A	JSL	MJK	EVB	7/30/209	60% SUBMITTAL

REGISTERED PROFESSIONAL ENGINEER MARK J. KLEVETER No. E 17748 ELECTRICAL STATE OF CALIFORNIA

BLACK & VEATCH JOINT VENTURE BLACK & VEATCH FILANC

CITY OF MORRO BAY
MORRO BAY WRF
RECLAMATION FACILTY (WRF)

MAINTENANCE BUILDING
ELECTRICAL
POWER AND GROUNDING PLAN

DESIGNED: JSL
DETAILED: SBC
CHECKED: MAS
APPROVED: MJK
DATE: 3/31/2020

0 1/2 1
IF THIS BAR DOES NOT MEASURE 1" THEN DRAWING IS NOT TO FULL SCALE

PROJECT NO. 400530

96-E-101
SHEET
OF

PLOTTED: 27-03-2020 18:17:56
D400530

90% SUBMITTAL - NOT FOR CONTRUCTION

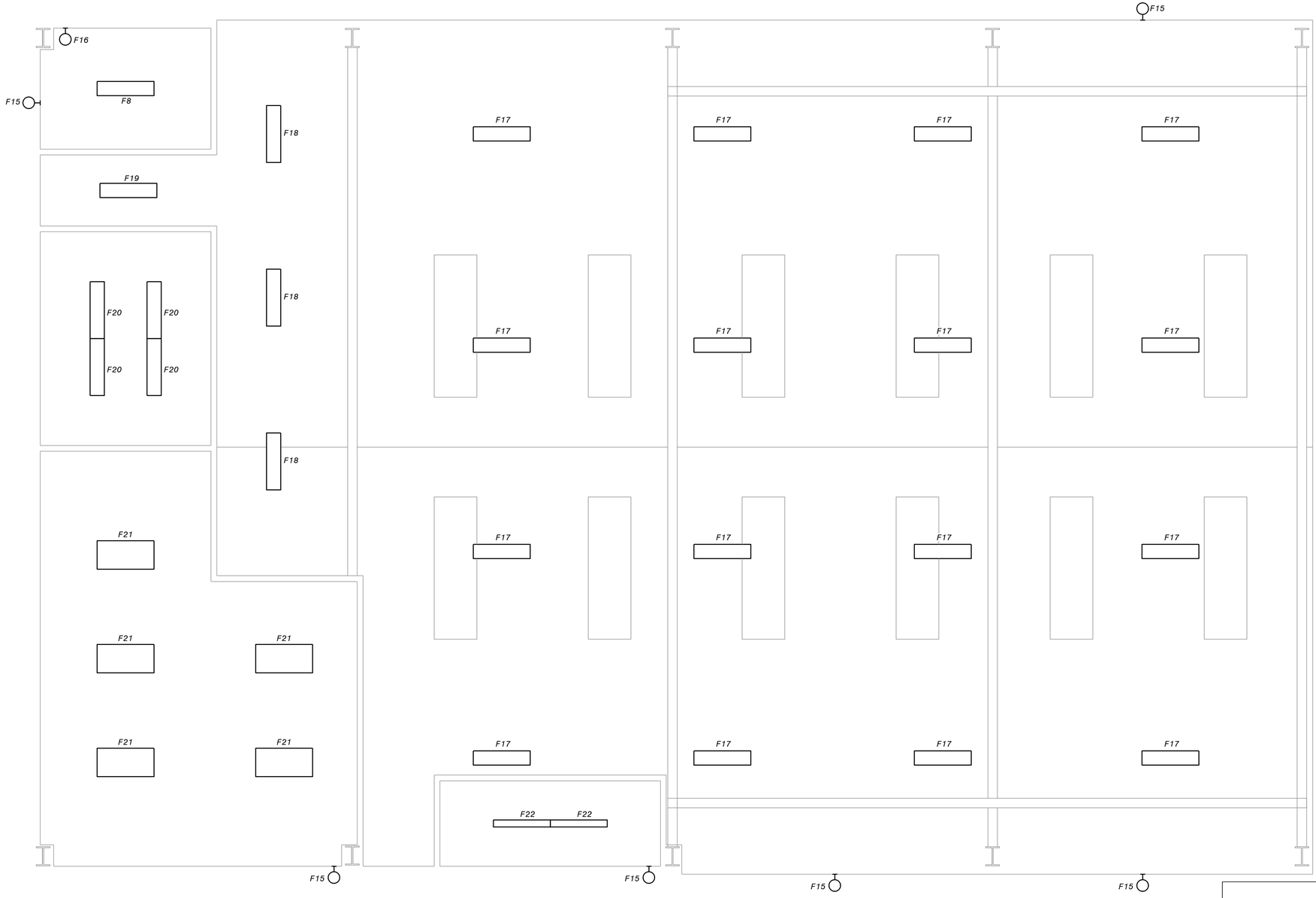

MAINTENANCE BUILDING LIGHTING PLAN

1/4"=1'-0"

LIGHTING FIXTURE SCHEDULE	
FIXTURE	**DESCRIPTION**
F8	1' X 4' SURFACE LED WRAPAROUND FIXTURE.
F15	WALL SURFACE LED WET LOCATION WALL PACK FIXTURE.
F16	WALL MOUNTED LED VANITY FIXTURE.
F17	1' X 4' SUSPENDED LED HIBAY FIXTURE, HIGH LUMEN DIMMABLE.
F18	1' X 4' SUSPENDED LED HIBAY FIXTURE, MID LUMEN DIMMABLE.
F19	1' X 4' SUSPENDED LED FIXTURE.
F20	1' X 4' DIRECT / INDIRECT LED SURFACE FIXTURE.
F21	2' X 4' DIRECT / INDIRECT LED SURFACE FIXTURE.
F22	4' VAPOR TIGHT LED STRIP LIGHT.

NOTES:

1. SEE DRAWINGS 00-E-001 AND 00-E-002 FOR ELECTRICAL LEGEND, ABBREVIATIONS AND NOTES.

4' 2' 0 4' 8'

1/4"=1'-0"

90% SUBMITTAL - NOT FOR CONSTRUCTION

NO.	BY	CHK	APP
B	JSL	MAS	MJK
A	JSL	MJK	EVB

REVISIONS AND RECORD OF USE

DATE	
3/31/2020	90% SUBMITTAL
7/30/2019	60% SUBMITTAL

REGISTERED PROFESSIONAL ENGINEER — No. E 17748 — STATE OF CALIFORNIA

BLACK & VEATCH JOINT VENTURE — BLACK & VEATCH — FILANC

CITY OF MORRO BAY
MORRO BAY WRF
RECLAMATION FACILITY (WRF)

MAINTENANCE BUILDING
ELECTRICAL
LIGHTING PLAN

DESIGNED: JSL
DETAILED: SBC
CHECKED: MAS
APPROVED: MJK
DATE: 3/31/2020

0 1/2 1

IF THIS BAR DOES NOT MEASURE 1" THEN DRAWING IS NOT TO FULL SCALE

PROJECT NO.
400530

96-E-111
SHEET
OF

FD9000A
0400530
PLOTTED: 3/27/2020 7:53 PM FILE: C:\pw_working\bvw_americas\d0683637\400530-96-E-111.dwg

			PANELBOARD: 96-ELEC-PP-0001		BUS: COPPER			MAINS: 3P-150A MAIN BREAKER				
PHASE			SERVICE: 480V 3PH, 3W		RATING: 150A			LOCATION: MAINTENANCE BUILDING		PHASE		
"A"	"B"	"C"	MOUNTING: SURFACE							"A"	"B"	"C"
V.A.	V.A.	V.A.	LOAD	P	BKR	CKT #	BKR	P	LOAD	V.A.	V.A.	V.A.
4157	4157	4157	96-HVAC-PHP-0001	3	20	1 2	20	3	96-HVAC-DF-0001	518	518	518
3454	3454	0	WELDING SOCKET # 1	2	20	3 4	20	2	WELDING SOCKET # 2	0	3454	3454
0	0	0	SPARE	3	20	5 6	20	3	SPARE	0	0	0
1727	1727	1727	CRANE	3	20	7 8	20	3	96-HVAC-EF-0001	345	345	345
10000	10000	10000	96-ELEC-LT-0001 (30KVA,480-208Y/120V,3PH,60HZ)(FEEDING 96-ELEC-PP-0002 AND 96-ELEC-LP-0001) (NOTE 2)	3	50	9 10	20	3	96-HVAC-EF-0002	345	345	345
2328	2328	2328	95-STW-P-0101	3	20	11 12	20	3	SPARE	0	0	0
0	0	0	SPARE	3	20	13 14	20	3	SPARE	0	0	0
0	0	0	SPARE	3	20	15 16	20	3	SPARE	0	0	0
0	0	0	SPARE	3	20	17 18	20	3	SPARE	0	0	0
0	0	0	SPARE	3	20	19 20	60	3	SPARE	0	0	0
0	0	0	SPARE	3	20	21 22	60	3	SPARE	0	0	0
0	0	0	SPARE	3	20	23 24	30	3	SPARE	0	0	0
0	0	0	SPARE	3	30	25 26	30	3	SPARE	0	0	0
0	0	0	SPARE	3	30	27 28	20	3	SPARE	0	0	0
21666			TOTAL "A"			22875			TOTAL "A"	1209		
	21666		TOTAL "B"			26328			TOTAL "B"		4663	
		18212	TOTAL "C"			22875			TOTAL "C"			4663
			TOTAL			72077						

96-ELEC-PP-0001
POWER PANELS SCHEDULE
MAINTENANCE BUILDING

			PANELBOARD: 96-ELEC-PP-0002		BUS: COPPER			MAINS: 3P-100A MAIN BREAKER				
PHASE			SERVICE: 120/208V, 3PH, 4W		RATING: 100A			LOCATION: MAINTENANCE BUILDING		PHASE		
"A"	"B"	"C"	MOUNTING: SURFACE							"A"	"B"	"C"
V.A.	V.A.	V.A.	LOAD	P	BKR	CKT #	BKR	P	LOAD	V.A.	V.A.	V.A.
518			96-HVAC-GUH-0001	1	20	1 2	20	1	96-HVAC-DF-0002	518		
	518		96-HVAC-GUH-0002	1	20	3 4	20	1	96-HVAC-DF-0003		518	
		518	96-HVAC-GUH-0003	1	20	5 6	20	1	96-PLUM-GWH-0001			500
518			96-HVAC-GUH-0004	1	20	7 8	20	1	96-ADMIN-LCP-0001	250		
	518		96-HVAC-GUH-0005	1	20	9 10	20	1	96-PLUM-CP-0001		500	
		500	96-HVAC-TCP-0001	1	20	11 12	20	1	96-PLUM-TP-0001			250
0			SPARE	1	20	13 14	20	1	HAND DRYER NO.1	500		
	0		SPARE	1	20	15 16	20	1	SPARE		0	
		0	SPARE	1	20	17 18	20	1	SPARE			0
0			SPARE	1	20	19 20	20	1	SPARE	0		
	0		SPARE	1	20	21 22	20	1	SPARE		0	
		0	SPARE	1	20	23 24	20	1	SPARE			0
0			SPARE	1	20	25 26	20	1	SPARE	0		
	0		SPARE	1	20	27 28	20	1	SPARE		0	
		0	SPARE	1	20	29 30	20	1	SPARE			0
0			SPARE	1	20	31 32	20	1	SPARE	0		
	0		SPARE	1	20	33 34	20	1	SPARE		0	
		0	SPARE	1	20	35 36	20	1	SPARE			0
0			SPARE	1	20	37 38	20	1	SPARE	0		
	0		SPARE	1	30	39 40	30	1	SPARE		0	
		0	SPARE	1	30	41 42	30	1	SPARE			0
1036			TOTAL "A"			2304			TOTAL "A"	1268		
	1036		TOTAL "B"			2054			TOTAL "B"		1018	
		1018	TOTAL "C"			1768			TOTAL "C"			750
			TOTAL			6126						

96-ELEC-PP-0002
POWER PANELS SCHEDULE
MAINTENANCE BUILDING

NOTES:

1. SEE DRAWINGS 00-E-001 AND 00-E-002 FOR ELECTRICAL LEGEND, ABBREVIATIONS AND NOTES.
2. TAP OF TRANSFORMER IS ADJUSTED TO ACCOMODATE VOLTAGE DROP.
3. PROVIDE MINIMUM #12, #12G CABLE AND 3/4" CONDUIT FOR 20A CIRCUIT; MINIMUM #8, #10G CABLE AND 3/4" CONDUIT FOR 30A CIRCUIT.
4. THE SINGLE PHASE LIGHTING PANEL SHALL BE RATED FOR 200A OR LESS.

90% SUBMITTAL - NOT FOR CONSTRUCTION

NO.	BY	CHK	APP	DATE	REVISIONS AND RECORD OF USE
B	JSL	MAS	MJK	3/31/2020	90% SUBMITTAL
A	JSL	MJK	EVB	7/30/2019	60% SUBMITTAL

CALIFORNIA REGISTERED PROFESSIONAL ENGINEER
No. E 17748
ELECTRICAL
EXPIRATION DATE OF LICENSE

BLACK & VEATCH
JOINT VENTURE
BLACK & VEATCH
FILANC

CITY OF MORRO BAY
MORRO BAY WRF
RECLAMATION FACILITY (WRF)

MAINTENANCE BUILDING
ELECTRICAL
POWER PANELS SCHEDULE

DESIGNED: JSL
DETAILED: SBC
CHECKED: MAS
APPROVED: MJK
DATE: 3/31/2020

0 1/2 1
IF THIS BAR DOES NOT MEASURE 1" THEN DRAWING IS NOT TO FULL SCALE

PROJECT NO.
400530

96-E-601
SHEET
OF

FB9000A
D400530
PLOTTED: 3/31/2020 10:13 AM FILE: C:\pw_working\bvw_americas\d0683637\400530-96-E-601.dwg

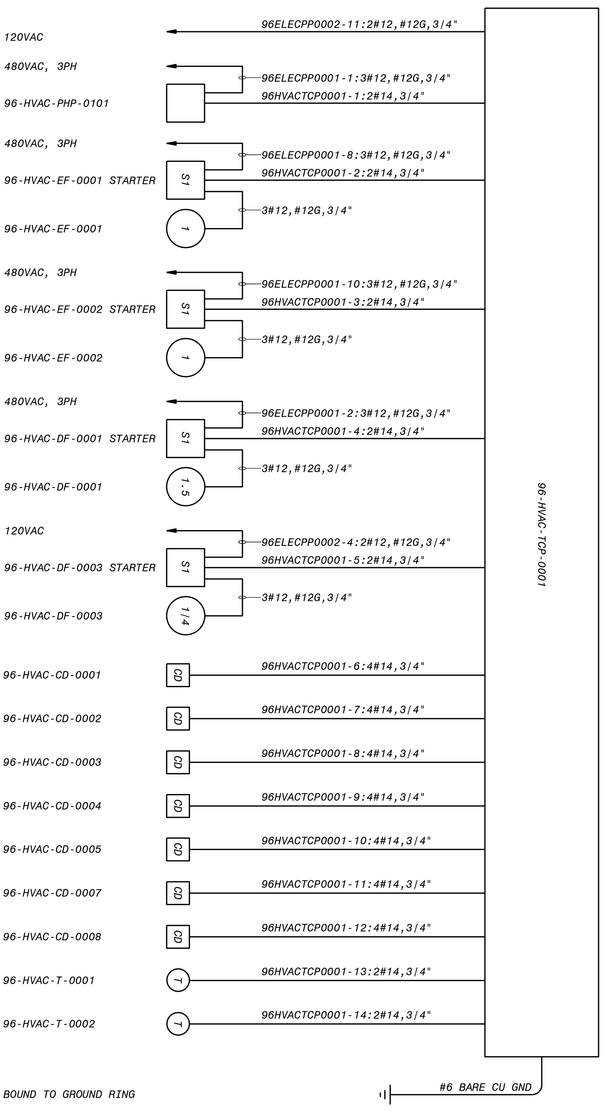

96-HVAC-TCP-0001 ONE-LINE DIAGRAM

MAINTENANCE BUILDING

NOTES:

1. SEE DRAWINGS 00-E-001 AND 00-E-002 FOR ELECTRICAL LEGEND, ABBREVIATIONS AND NOTES.
2. ALL CIRCUITS SHOWN ON THIS DRAWING WITHOUT THE DUCT SYMBOL SHALL BE FIELD ROUTED BY ELECTRICAL CONTRACTOR. ELECTRICAL CONTRACTOR TO DETERMINE IF THE CONDUITS SHALL BE BELOW GROUND OR ABOVE GROUND.
3. 24V DC POWER CIRCUIT, 24V DC DIGITAL CIRCUITS AND 24V DC ANALOG CIRCUITS MAY BE COMBINED INTO THE SAME CONDUIT AS LONG AS THE CONDUIT FILL MEETS THE NEC REQUIREMENTS.

90% SUBMITTAL - NOT FOR CONSTRUCTION

DESIGNED: JSL
DETAILED: SBC
CHECKED: MAS
APPROVED: MJK
DATE: 3/31/2020

0 1/2 1
IF THIS BAR DOES NOT MEASURE 1" THEN DRAWING IS NOT PLOTTED AT SCALE

PROJECT NO.: 400530

96-E-711
SHEET OF

CITY OF MORRO BAY
MORRO BAY WRF
RECLAMATION FACILITY (WRF)

MAINTENANCE BUILDING
ELECTRICAL
MISCELLANEOUS ONE-LINE DIAGRAM

BLACK & VEATCH
JOINT VENTURE
FILANC BLACK & VEATCH

No. E 17748

DATE	REVISIONS AND RECORD OF USE	NO.	BY	CHK	APP
3/31/2020	90% SUBMITTAL	A	JSL	MAS	MJK